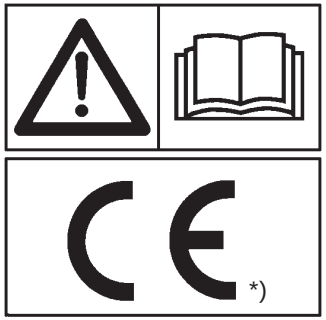

GASPARDO

MASCHIO GASPARDO S.p.A.

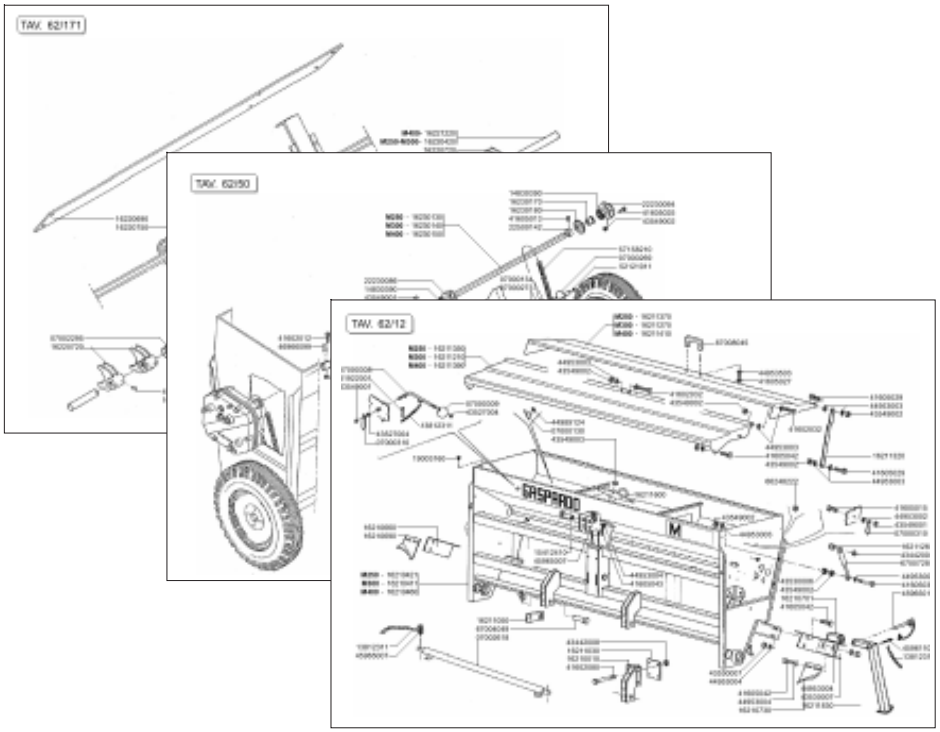

NINA

Cod: G19530853 2009-09

*) Valido per Paesi UE
*) Valid for EU member countries
*) Valable dans les Pays UE
*) Gilt für EU-Mitgliedsländer
*) Válido para Países UE

IT PARTI DI RICAMBIO
EN *SPARE PARTS*
DE ERSATZTEILE
FR *PIECES DÉTACHÉES*
ES PIEZAS DE REPUESTO

PARTI DI RICAMBIO

Le ordinazioni delle parti di ricambio vanno fatte presso i nostri concessionari di zona e devono essere sempre corredate dalle seguenti indicazioni:

- **Tipo, modello e numero di matricola dell'attrezzatura.** Tali dati sono stampigliati nell'apposita targhetta di cui è dotata ogni attrezzatura.

- **Numero di codice della parte richiesta** rilevabile dal catalogo ricambi.

- **Descrizione del particolare e quantità richiesta.**

- **Numero della tavola.**

- **Mezzo di trasporto.** Nel caso questa voce non sia specificata, la Ditta Costruttrice, pur dedicando a questo servizio una particolare cura, non risponde di eventuali ritardi di spedizione dovuti a cause di forza maggiore.
Le spese di trasporto si intendono sempre a carico del destinatario. La merce viaggia a rischio e pericolo del committente anche se venduta franco destino.

NOTA: Il termine (**Dx**) **Destro** o (**Sx**) **Sinistro** della macchina o di parti di essa, è inteso guardando la macchina dalla parte posteriore. Le eccezioni saranno indicate.

SPARE PARTS

Orders must be transmitted through our area dealers and should always include the following indications:

- ***Type, model and serial number of the machine.*** *These data are punched on the data plate with which every implement is equipped.*

- ***Code number of the required spare part.*** *This will be found in the spare parts catalogue.*

- ***Description of the part and required quantity.***

- ***Table number.***

- ***Means of dispatch.*** *If this item is not indicated, the Manufacturer, while dedicating particular care to this service, shall not be held responsible for delays in delivery caused by cases of force majeure.*
Transport expenses shall always be at the consignee's charge. The goods travel at the purchaser's risk and peril even when sold ex destination.

NOTE: *The symbols* ***(Dx) right*** *and* ***(Sx) left****, concerning the machine or single parts of it, are referred, as in the figure, to a rear view of them. Exceptions will be indicated.*

ERSATZTEILE

Die Bestellungen müssen bei unseren Gebietshändrer aufgegeben werden. Bei der Bestellung sind stets die folgenden Angaben zu machen:

- **Typ, Modell und Serien-Nummer des Geräts**. Diese Daten stehen auf dem Typenschild, mit dem jedes Gerät versehen ist.

- **Artikel Nr. der erforderlichen Ersatzteile.** Diese stehen im Ersatzteil-Katalog.

- **Beschreibung des Ersatzteils und die erforderliche Stückzahl.**

- **Tafelnummer.**

- **Versandmittel.** Wenn dieser Punkt nicht spezifiziert wird, haftet die Herstellerfirma nicht für etwaigen Lieferverzug aufgrund höherer Gewalt, auch wenn er diesen Service besonders aufmerksam abwickelt.
Die Frachtkosten gehen dagegen immer zu Lasten des Empfängers. Die Ware reist auf Gefahr und Risiko des Auftraggebers, auch wenn frei Haus Verkauft vereinbart worden ist.

N.B.: Die Merkzeichen (**Dx**) **rechts** und (**Sx**) **links** betreffen eine rückwärtige Aussicht der Maschine oder Teile von ihr (siehe Bild). Ausnahmen werden gezeigt.

PIECES DÈTACHÈES

Les ordres doivent être effectués auprés de nos concessionaires de zone en précisant les indications suivantes:

- ***Type, modéle et numéro de série de la machine****. Ces données sont gravées sur la plaque d'identification de chaque outil.*

- ***Numéro de code de la piéce détachée*** *indiqué sur le catalogue des piéces détachées.*

- ***Description de la piéce et quantité requise****.*

- ***Numéro de plan****.*

- ***Moyen d'expédition****. Si cette rubrique n'est pas indiquée, le Constructeur, bien que soucieux de ce service, ne répond pas des retards d'expédition pour des causes de force majeure.*
Les frais de transport sont toujours à la charge du destinataire. La marchandise voyage aux risques et périls de l'acheteur même si vendue franco de port.

N.B.: *Les références* ***(Dx) droit*** *et* ***(Sx) gauche*** *de la machine ou des parties de la même, est entendue, comme de la figure, en regardant la machine de derriere dans le sens de marche.*

RESPUESTOS

Los pedidos han de efectuarse en nuestros consesionarios de zona y deben incluir siempre las siguientes indicaciones:

- **Tipo, modelo y número de matrícula del equipo**. Dichos datos están impresos en la relativa placa presente en el equipo.

- **Número de código de la parte requerida** presente en el catálogo respuestos.

- **Descripcíon de la pieza y cantidad requerida**.

- **Numero de illustración**.

- **Medio de transporte**. En caso que este ítem no esté especificado, el Fabricante, aún prestando la debidas consideraciones para este aspecto, no responde por eventuales retardos de env'o debidos a causas de fuerza mayor.
Los gastos de transporte se consideran siempre a cargo del destinatario. La mercandería viaja bajo riesgo y peligro del comprador, incluso cuando se vende franco destino.

N.B.: La refencia (**Dx**) **derecha** o (**Sx**) **izquierda** de la máquina o de sus componentes, se entiende, como en la figura, mirando la máquina por la parte trasera. Se indicarán las excepciones.

Nr. Tav.	*Descrizione - Description*	*Pag.*
TAV. 012	Telaio tramoggia	4
TAV. 022	Distribuzione	6
TAV. 032	Trasmissione e cambio	8
TAV. 041	Ruote e rompitraccia	10
TAV. 052	Doppia trasmissione	12
TAV. 060	Regolazione assolcatori	14
TAV. 070	Regolazione oleodinamica assolcatori	16
TAV. 081	Vaschette scarico semi	18
TAV. 094	Assolcatori a stivaletto	20
TAV. 104	Assolcatori a dischi COREX	22
TAV. 202	Assolcatori a SINGOLO disco	26
TAV. 112	Segnafile	28
TAV. 121	Erpice copriseme MULTI CONTROL	32
TAV. 211	Erpice copriseme LIGHT	34
TAV. 130	Pedana	36
TAV. 142	Separatori e rialzo tramoggia	38
TAV. 151	Tramoggia semina erbai	40
TAV. 161	Trasmissione tramoggia semina erbai	42
TAV. 171	Tracciasentieri posteriore	46
TAV. 180	Sensori di controllo	48
TAV. 191	Kit luci e tabelle d’ingombro	50

TAV. 012

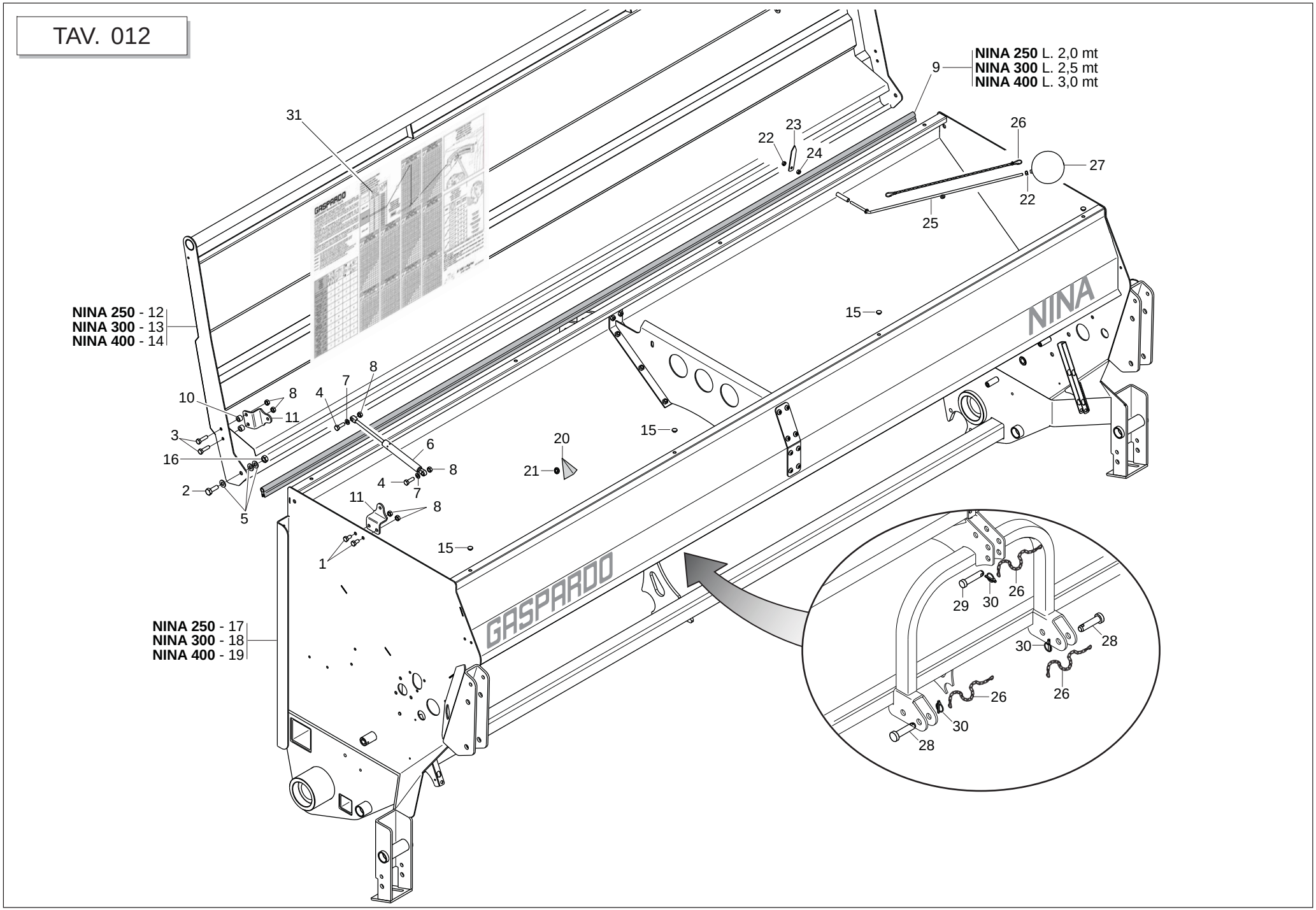

GASPARDO

cod. G19530853

TELAIO TRAMOGGIA

TAV. 012

Pos.	Cod.	Descrizione	Description	Description	Benennung	Descripcion
1	F01020432	VITE M 8X1,25X16 U5739 8.8 ZN	BOLT M 8X16	VIS M 8X16	SCHRAUBE M 8X16	TORNILLO M 8X16
2	F01020476	VITE M10X 1,5X30 U5739 8.8 ZN	BOLT M 10X30	VIS M 10X30	SCHRAUBE M 10X30	TORNILLO M 10X30
3	F01020445	VIT.M 8X1,25X 30 U5739 8.8 ZN	BOLT M 8X30	VIS M 8X30	SCHRAUBE M 8X30	TORNILLO M 8X30
4	F01020436	VITE M 8X1,25X 20 U5739 8.8 ZN	BOLT M 8X20	VIS M 8X20	SCHRAUBE M 8X20	TORNILLO M 8X20
5	F01410064	ROS.M10 10,5X 20X 2 U6592 ZN	WASHER 10,5X21	RONDELLE 10,5X21	SCHEIBE 10,5X21	ARANDELA 10,5X21
6	F02400011	MOLLA A GAS 400 N	GAS SPRING 400 N	RESSORT A GAZ 400 N	GASFEDER 400 N	MUELLE DE GAS 400 N
7	F01410051	ROS.M8 8,4X 17X1,6 U6592 ZN	PLANE WASHER D.8	RONDELLE D.8	SCHEIBE D.8	ARANDELA D.8
8	F01220022	DADO M 8X1,25 D980 8 ZN	SELF LOCKING NUT M8X1,25 980V	ECROU AUTOBL. M8X1,25 980-V	SELBSTSP.MUTT. M8X1,25 980-V	DADO AUTOBL. M8X1,25 980-V
9	F03011087	GUARNIZIONE BATTUTA COPERCHIO	COVER RABBET GASKET	GARNITURE BUTEE COUVERCLE	DICHTUNG DECKELANSCHLAG	JUNTA DE TOPE TAPA
10	G18801580	BOCCOLA 8,5 X15 X10 ZN	BUSH 8.5 X15 X10	DOUILLE 8,5 X15 X10	BUCHSE 8,5 X15 X10	MANGUITO 8,5 X15 X10
11	G16313680	ATTACCO STELO MOLLA ZN				
12	G16212782	ASS.COPERCHIO M250	COVER SHAFT M250	ASSEMBLAGE COUVERCLE M250	MONT.DECKEL M250	ENS.TAPA M250
13	G16212742	COPERCHIO M300	COVER M300	COUVERCLE M300	DECKEL M300	TAPA M300
14	G16212822	COPERCHIO M400				
15	F05100145	TAPPO PLASTCA D.9 X FORO 10				
16	F01220033	DADO M10X 1,5 D980 8 ZN	NUT M10X 1,5 D980 8 ZB	ECRO.M10X 1,5 D980 8 ZB	MUTT.M10X 1,5 D980 8 ZB	TUER.M10X 1,5 D980 8 ZB
17	G16214112	ASS.TELAIO TRAMOGGIA NINA250				
18	G16213382	ASS.TELAIO TRAMOGGIA NINA300				
19	G16214191	TELAIO NINA 400				
20	G07000130	ANGOLARE FLUIDITA' SEMENTI	SEED CHUTE L BAR	CORNIERE FLUIDITE GRAINES	SAATGUT FLUIDITZTSWINKEL	ANGULAR FLUIDEZ SEMILLAS
21	F02050648	ANELLO BENZING-QUICKLOCK BQ7 >	BENZING-QUICKLOCK BQ7 RING	BAGUE BENZING-QUICKLOCK BQ7	RING BENZING-QUICKLOCK BQ7	ANILLO BENZING-QUICKLOCK BQ7
22	F01220011	DADO M 6X 1 D980 8 ZN	SELF LOCKING NUT M6	ECROU AUTOBL. M6	SELBSTSPERR.MUTTER M6	DADO AUTOBL. M6
23	G07000310	INDICE LIVELLO POS. VERTICALE	VERTICAL POSITION LEVEL INDEX	INDEX DE NIVEAU POS. VERTICAL	STANDANZEIGER VERTIKALE POSITI	NDICE NIVEL POSICIN VERTICALIN
24	F01200232	DADO M 6X 1 U5588 6.8 ZN				
25	G07000308	ASTA LIVELLO SEMENTI	SEED LEVEL ROD	TIGE DE NIVEAU DES GRAINES	SAATGUTMESS-STAB	VARILLA DE NIVEL SEMILLAS
26	G13812311	CATENELLA CON MOSCHETTONE	CHAIN WITH SPRING CATCH	CHAINETTE AVEC MOUSQUETON	KETTE MIT KARABINERHAKEN	CADENA CON GANCHO
27	G07000309	GALLEGGIANTE	FLOAT	FLOTTEUR	SCHWIMMER	FLOTADOR
28	F20100078	PERNO D28 L93 C43 ZN	PIN D.28	GOUJON D.28	BOLZEN D.28	PERNO D.28
29	F20100063	PERNO D25 L91 C40 ZN	PIN GASPARDO D25 L113 C40	PIVOT GASPARDO D25 L113 C40	BOLZEN GASPARDO D25 L113 C40	PERNO GASPARDO D25 L113 C40
30	F02200507	SPINA SCATTO D. 9 B/83 ZN	SNAP PIN D 9 B/83	FICHE A DETENTE D 9 B/83	EINRASTSTIFT D 9 B/83	CLAVIJA DE MUELLE D 9 B/83
31	G19707111	TABELLA DI SEMINA NINA				

TAV. 022

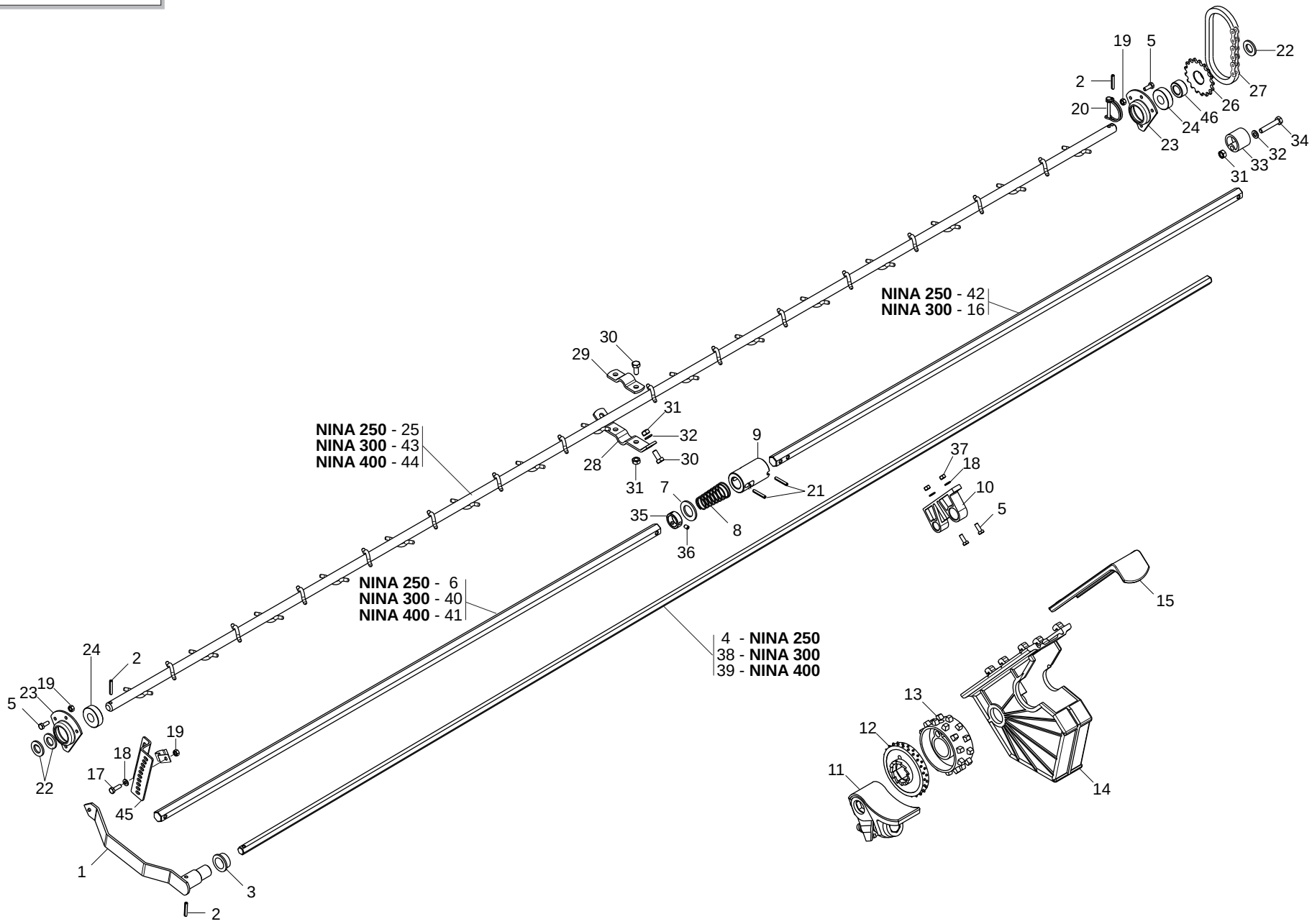

GASPARDO

cod. G19530853

DISTRIBUZIONE

TAV. 022

Pos.	Cod.	Descrizione	Description	Description	Benennung	Descripcion
1	G16221200	LEVA REGOL.TASTATORI	FEELER ADJUSTMENT LEVER	LEVIER REGLAGE TATEURS	TASTERREGULIERHEBEL	PALANCA REGULACIN PALPADORES M
2	F02100086	SPINA E.P. 5X 30 U6873 C70 BR	PIN EL. 5 X30 DIN 1481 ZN	FICHE EL. 5 X30 DIN 1481 ZN	SPANNSTIFT 5 X30 DIN 1481 ZN	CLAVIJA EL.5 X30 DIN 1481 ZN
3	F04100055	CUSC. RADENTE IGLIDUR 22X28X15				
4	G16220510	ASSE ESAG.14 X2050 ZN				
5	F01020403	VITE M 6X 1X 16 U5739 8.8 ZN	BOLT M 6X16	VIS M 6X16	SCHRAUBE M 6X16	TORNILLO M 6X16
6	G16221440	ASSE DISTRIBUZIONE SX ZN				
7	F01410135	ROS.M22 23X 39X 3 U6592 ZN	PLANE WASHER D.22	BAGUE D.22	SCHEIBE D.22	ARANDELA D.22
8	G65338039	MOLLA COMP.ZN INNESTO SP	ZN COUPLING COMP. SPRING SP	RESSORT COMPL. ZN ACCOUPLEM.	DRUCKFEDER ZN KUPPLUNG SP	MUELLE COMP.ZN ACOPLAMIENTO SP
9	G16221330	DISINNESTO ASSE DISTRIB. ZN				
10	G19003030	SUPPORTO ALBERI	SHAFTS SUPPORT	SUPPORT ARBRES	WELLENLAGER	SOPORTE EJES
11	G16220610	REGOLATORE	GOVERNOR	REGULATEUR	REGLER	REGULADOR
12	G19002380	RULLO A DENTI FINI	ROLLER- FINE TEETH M97	ROTOR PETITS ERGOTS	FEINGEZAHNTE ROLLE M97	RODILLO DE DIENTES FINOS M97
13	G16220600	RULLO DENTI COMBINATO	COMBINED TOOTH ROLLER	ROTOR GROS ERGOTS *	KOMBINIERTE ZAHNROLLE	RODILLO DIENTES COMBINADO
14	G19003014	SCATOLETTA DISTRIBUZIONE				
15	G19003023	CURSORE REGOLAZ.APERTURA				
16	G16320460	ASSE DISTRIBUZIONE DX				
17	F01020404	VITE M 6X 1X20 U5739 8.8 ZN	BOLT 6X20 5739 8.G GALVANIZED	VIS 6X20 5739 8.G ZN	SCHRAUBE 6X20 5739 8.G ZN	TORNILLO 6X20 5739 8.G ZN
18	F01410037	ROS.M6 6,4X12,5X1,6 U6592 ZN	PLANE WASHER D.6	RONDELLE D.6	SCHEIBE D.6	ARANDELA D.6
19	F01220011	DADO M 6X 1 D980 8 ZN	SELF LOCKING NUT M6	ECROU AUTOBL. M6	SELBSTSPERR.MUTTER M6	DADO AUTOBL. M6
20	F02200595	SPINOTTO X INGRANAGGIO				
21	F02100091	SPINA E.P. 5X 45 U6873 C70 BR	PIN EL. .5 X45 DIN 1481	FICHE EL. 5 X45 DIN 1481	SPANNSTIFT 5 X45 DIN 1481	CLAVIJA EL.5 X45 DIN 1481
22	F01410100	ROS.M16 17X 30X 3 U6592 ZN	PLANE WASHER D16 UNI 6592 ZN	RONDELLE D16 UNI 6592 ZN	SCHEIBE D.16 UNI 6592 ZN	ARANDELA D16 UNI 6592 ZN
23	G16220090	SUPPORTO CUSCINETTO	GALV.BEARING SUPPORT	SUPPORT PALIER ZN	LAGERBsCHSE ZN	SOPORTE COJINETE ZN
24	F04010161	CUSC.D17 D40 B12 6203 2RS EX	BEARING 6203	ROULEMENT 6203 2RS	LAGER 6203 2RS	COJINETE 6203 2RS SKF
25	G16220112	ALBERO MESCOLO NINA 250				
26	G16220100	INGRANAGGIO Z-17	GEAR Z.17	ENGRENAGE Z.17	ZAHNRAD Z.17	ENGRANAJE Z.17
27	F06080135	CATENA 1/2 ISO 084 28 MAGLIE				
28	G16221260	SUPPORTO INF.ALBERO AGITATORE				
29	G16220590	SUPPORTO MESCOLO	MIXER SUPPORT	SUPPORT MELANGEUR	HALTERUNG MISCHER	SOPORTE MEZCLADOR
30	F01020436	VITE M 8X1,25X 20 U5739 8.8 ZN	BOLT M 8X20	VIS M 8X20	SCHRAUBE M 8X20	TORNILLO M 8X20
31	F01220022	DADO M 8X1,25 D980 8 ZN	SELF LOCKING NUT M8X1,25 980V	ECROU AUTOBL. M8X1,25 980-V	SELBSTSP.MUTT. M8X1,25 980-V	DADO AUTOBL. M8X1,25 980-V
32	F01410051	ROS.M8 8,4X 17X1,6 U6592 ZN	PLANE WASHER D.8	RONDELLE D.8	SCHEIBE D.8	ARANDELA D.8
33	G66248207	TENDICATENA SPAND. SP-520	CHAIN TENSIONER	TENDEUR DE CHAINE EPAND. ENGR.	KETTENSPANNER DsNGERSTR. SP-52	TENSOR DE CADENA ABON. SP-520
34	F01020070	VITE M 8X1,25X45 U5737 8.8 ZN	BOLT 8 X45 5737 8.G GALVANIZED	VIS 8 X45 5737 8.G ZN	SCHRAUBE 8 X45 5737 8.G ZN	TORNILLO 8 X45 5737 8.G ZN
35	G16221510	FERMO ASSE DISTRIBUZIONE ZN				
36	F01050085	VIT.M 6X 1X 8 U5927	GRUB-SCREW 6X 8 UNI 5927	GOUJON 6X 8 UNI 5927	STIFT 6X 8 UNI 5927	TORNILLO SIN CABEZA 6X 8 UNI 5
37	F01200232	DADO M 6X 1 U5588 6.8 ZN				
38	G16220520	ASSE ESAG.14 X2550 ZN				
39	G16220530	ASSE ESAGONALE 14X3550 ZN	HEX. SPINDLE 14x3550 GALVAN.	AXE HEXAGONAL 14x3550 ZN	SECHSK.ACHSE 14x3550 ZN	EJE HEXAGONAL 14x3550 ZN
40	G16320450	ASSE DISTRIBUZIONE SX				
41	G16220500	ASSE ESAG.C40 19X3540	HEX. SPINDLE 19x3540	AXE HEXAGONAL 19x3540	SECHSK.ACHSE 19x3540	EJE HEXAGONAL 19x3540
42	G16221430	ASSE DISTRIBUZIONE DX.ZN				
43	G16221521	ALBERO MESCOLO NINA 300				
44	G16220561	ALBERO MESCOLO NINA 400				
45	G16220250	LEVA REGOLAZ.TASTATORI	FEELER ADJUSTING SQUARE *	LEVIER DE REGLAGE DES TATEURS	TASTERREGULIERWINKEL*	ESCUADRA DE REGULAC. DE PALPAD
46	G18801860	BOCCOLA 17,25X30 X14	BUSHING 17,25X30X14 GALV.	BOITE 17,25X30X14 ZN	BsCHSE 17,25X30X14 ZN	CASQUILLO 17,25X30X14 ZN

TAV. 032

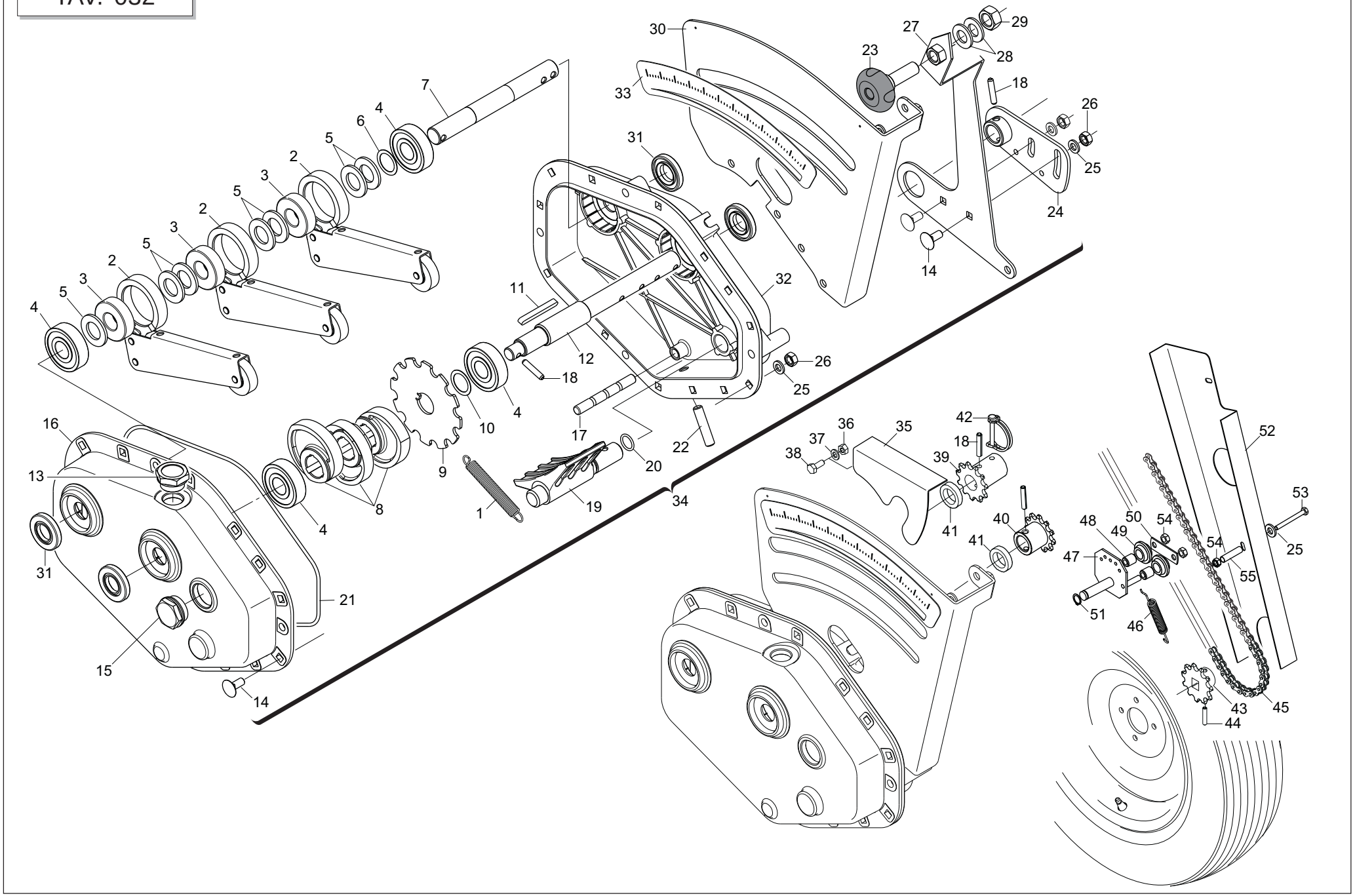

GASPARDO

TRASMISSIONE E CAMBIO

TAV. 032

Pos.	Cod.	Descrizione	Description	Description	Benennung	Descripcion
1	G18903290	MOLLA TRAZ.CAMBIO M	TRACTION SPRING- GEARS M	RESSORT TRACT. BOITE VITESSE M	ZUGFEDER GETRIEBE M	MUELLE TRAC. CAMBIO M
2	G07000006	RIBADITURA BIELLA	CONNECTING ROD RIVETING	RIVETAGE BIELLE	PLEUEL EINNIETEN	REMACHADO BIELA
3	F06120065	RUOTA LIBERA KK20	FREE WHEEL KK20	ROUE LIBRE KK20	FREILAUF KK20	RUEDA LOCA KK20
4	F04010207	CUSC.D20 D52 B15 6304 Z	BEARING d20 D52 B15 6304 Z	PALIER d20 D52 B15 6304 Z	LAGER d20 D52 B15 6304 Z	COJINETE d20 D52 B15 6304 Z
5	F01410124	ROS.M20 21X 37X 3 U6592 ZN	PLANE WASHER D20 UNI 6592 ZN	RONDELLE D20 UNI 6592 ZN	SCHEIBE D20 UNI 6592 ZN	ARANDELLA D20 UNI 6592 ZN
6	G20970100	RONDELLA 30X0,5X22 ACC.	WASHER 30X0-5X22 ACC.	RONDELLE 30X0-5X22 ACIER	UNTERLEGSCHEIBE 30X0-5X22 ACC.	ARANDELA 30X0-5X22 ACC.
7	G16230530	ALBERO RUOTA LIBERA C.PLA BON.				
8	G07000014	CAMMA CAMBIO BAGNO OLIO	OIL BATH GEARBOX CAM	CAME BOITE DE VIT. BAIN HUILE	NOCKEN GETRIEBE TLBAD	LEVA CAMBIO BA¾O ACEITE
9	G16230520	RUOTA FONICA				
10	F01440079	ROND.RASAM.26,2X34,8X0,5 IX	WASHER D.26,2X34,8X0,5	RONDELLE D.26,2X34,8X0,5	UNTERLEGSCHEIBE D.26,2X35X0,5	ARANDELA D.26,2X34,8X0,5
11	F02150040	LINGUETTA 6X 6X 55 U6604A	TAB 06X6X55 UNI 6604/A	LANGUETTE 06X6X55 UNI 6604/A	FEDERKEIL 06X6X55 UNI 6604/A	LENGsETA 06X6X55 UNI 6604/A
12	G16230540	ALBERO CAMMES CAMBIO PLA				
13	F03150706	TAPPO OLIO 3/4" MODELLO TC/6				
14	F01060040	BUL.M 8X1,25X 20 U5732 4.6 ZG	BOLT 8 X20 5732 4.6 GALVANIZED	VIS 8 X20 5732 4.6 ZN	SCHRAUBE 8 X20 5732 4.6 ZN	TORNILLO 8 X20 5732 4.6 ZN
15	F03150736	TAPPO LIVELLO M30X1,5 HFE 22	OIL LEVEL PLUG M30X1,5 HFE 22	BOUCHON NIV. M30X1-5 HFE 22	STANDSCHRAUBE M30X1-5 HFE 22	TAPN NIVEL M30X1-5 HFE 22 D
16	G19005720	COPERCHIO CAMBIO				
17	G16230550	PERNO SUPPORTO MOLLE				
18	F02100114	SPINA E.P. 6X 30 U6873 C70 BR	ELASTIC PIN 6X30	GOUJON ELASTIQUE 6X30	SPANNHUELSE 6X30	ESPINA ELASTICA 6X30
19	G16230560	REGOLATORE CAMBIO				
20	F03010390	ANELLO OR 15,08X2,26 NBR	O-RING 119	GARNITURE OR 119	DICHTUNG OR 119	JUNTA OR 119
21	F03010721	ANEL. OR 247,24X3,53 NBR				
22	F01050104	VIT.M10X 1,5X 45 U5927 14.9 BR	GRUB--SCREW 10X45 5927 14.9	GOUJON 10X45 5927 14.9	STIFT 10X45 UNI 5927 14.9	TORNILLO SIN CABEZA 10X45 5927
23	F06220014	VOLANTINO 8 LOBI M12X40 SX	8-LOBE HANDWHEEL M12X40 LEFT	VOLANT 8 LOBES M12X40 GCH	HANDRAD 8 BUCKEL M12X40 LINKS	VOLANTE 8 LOBI M12X40 IZQ
24	G16230590	ASS.SUPP.LEVA REGOLAZIONE ZN				
25	F01410051	ROS.M8 8,4X 17X1,6 U6592 ZN	PLANE WASHER D.8	RONDELLE D.8	SCHEIBE D.8	ARANDELA D.8
26	F01200244	DADO M 8X1,25 U5588 6.8 ZN	NUT M8	ECROU M8	MUTTER M8	DADO M8
27	G16230610	ASS.LEVA REGOLAZIONE ZN				
28	F01410076	ROS.M12 13X 24X2,5 U6592 ZN	PLANE WASHER D12 UNI 6592 ZN	RONDELLE D12 UNI 6592 ZN	SCHEIBE D12 UNI 6592 ZN	ARANDELA D12 UNI 6592 ZN
29	G16230360	DADO M12X1,75 SX AUTOB.	M12X1,75 LEFT SELF-LOCK NUT	ECROU M12X1,75 GCH AUTOBLOCANT	MUTTER M12X1,75 LINKS SELBSTSP	TUERCA M12X1,75 IZ. AUTO.
30	G16230570	SUPPORTO REGOLAZIONE ZN				
31	F03010257	ANEL. T.AS 20X 42X 7 D3760NBR				
32	G19005710	SCATOLA CAMBIO				
33	G19703421	DECAL.REGOLAZ.CAMBIO PLA				
34	G16230510	SCATOLA CAMBIO SEME PLA				
35	G16230081	CARTER AGITATORE				
36	F01220011	DADO M 6X 1 D980 8 ZN	SELF LOCKING NUT M6	ECROU AUTOBL. M6	SELBSTSPERR.MUTTER M6	DADO AUTOBL. M6
37	F01410037	ROS.M6 6,4X12,5X1,6 U6592 ZN	PLANE WASHER D.6	RONDELLE D.6	SCHEIBE D.6	ARANDELA D.6
38	F01020400	VITE M 6X 1X 14 U5739 8.8 ZN	BOLT 6X14 5739 8.G GALVANIZED	VIS 6X14 5739 8.G ZN	SCHRAUBE 6X14 5739 8.G ZN	TORNILLO 6X14 5739 8.G ZN
39	G16230060	PIGNONE Z11 ZN	PINION Z 11	PIGNON Z 11	RITZEL Z 11	PI¾N Z 11 P
40	G16230040	PIGNONE Z-11 ZN	GEAR Z.11 GALVANIZED	PIGNON Z 11 ZN	RITZEL Z 11 ZN	PI¾N Z 11 ZN P
41	F03011063	AN.TENUTA BASL 20x30x7 DIN3760	SEALING RING 20X30X7AS DIN3760	BAGUE D'ETANCHEITE SC20X30X7	DICHTUNGSRING SC20X30X7	ANILLO AISLADOR SC20X30X7
42	F02200595	SPINOTTO X INGRANAGGIO				
43	G13930380	PIGNONE Z20 1/2-3/16 D.16,4				
44	F02100118	SPINA E.P. 6X 36 U6873 C70 BR	PIN EL. 6 X36 DIN 1481	FICHE EL. 6 X36 DIN 1481	SPANNSTIFT 6 X36 DIN 1481	CLAVIJA EL.6 X36 DIN 1481
45	F06080134	CATENA 1/2 ISO 084 104 MAGLIE				
46	G18903280	MOLLA TENDICATENA	TENSIONER SPRING	RESSORT TENDEUR DE CHAINE	FEDER KETTENSPANNER	MUELLE TENSOR DE LA CADENA
47	G07000269	ASS.TENDICATENA	CHAIN TIGHTENER	ESSIEU TENDEUR DE CHAINE	EINHEIT KETTENSPANNER	TENSOR DE CADENA
48	G07000273	BUSSOLA TENDICATENA	CHAIN TIGHTENER BUSH	DOUILLE TENDEUR DE CHAINE	BsCHSE KETTENSPANNER	CASQUILLO TENSOR DE CADENA
49	G07000134	RULLO TENDICATENA	CHAIN TIGHTENER ROLLER	ROULEAU TENDEUR DE CHAINE	ROLLE KETTENSPANNER	RODILLO TENSOR DE LA CADENA
50	G07000272	PIASTRINA CHIUSURA TENDICATENA	CHAIN TIGHTENER CLOSING PLATE	PLAQUETTE FERM. TEND. DE CHAIN	KETTENSPANNERSCHLIESS-PLATTE	PLACA DE CIERRE TENSOR DE CADE
51	F02050604	ANELLO E. DE 14X 1 U7435 C70	STOP RING 14 UNI 7435-75	BAGUE ARR.14 UNI 7435-75	RING 14 UNI 7435-75	ANILLO PARADA 14 UNI 7435-75
52	G16230480	CARTER TRASMISSIONE				
53	F01020083	VITE M 8X1,25X70 U5737 8.8 ZN	BOLT M 8X70	VIS M 8X70	SCHRAUBE M 8X70	TORNILLO M 8X70
54	F01220022	DADO M 8X1,25 D980 8 ZN	SELF LOCKING NUT M8X1,25 980V	ECROU AUTOBL. M8X1,25 980-V	SELBSTSP.MUTT. M8X1,25 980-V	DADO AUTOBL. M8X1,25 980-V
55	G16230640	DISTANZIALE CARTER TRSM.				

TAV. 041

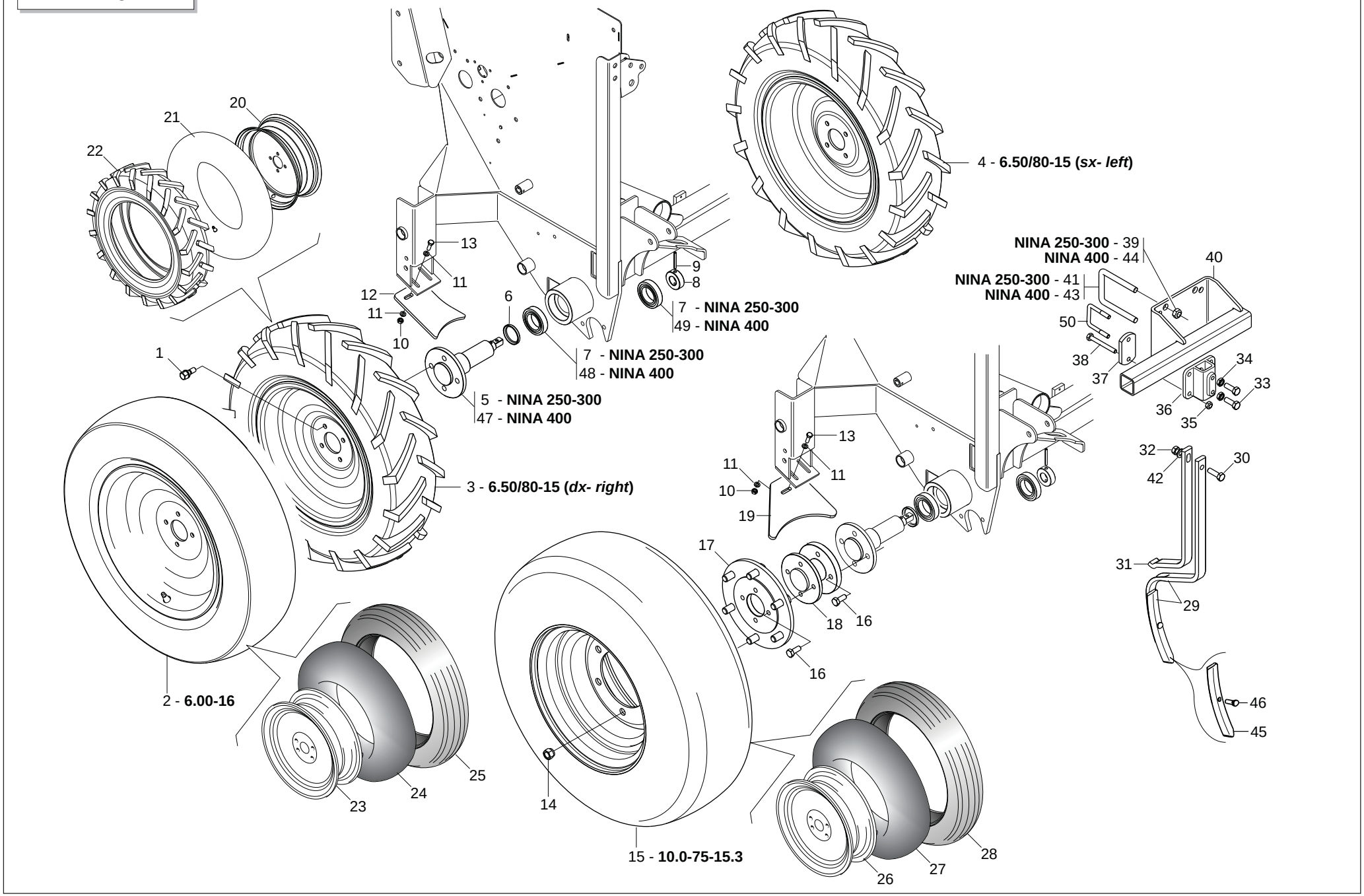

GASPARDO

RUOTE E ROMPITRACCIA

TAV. 041

Pos.	Cod.	Descrizione	Description	Description	Benennung	Descripcion
1	F01250028	DADO COLON.CON.60°M12X20 ZN	STUD BOLT M12X20 ZN	COLONNETTE M12X20 ZN	SCHRAUBBOLZEN M12X20 ZN	ESP-RRAGO M12X20 ZN
2	G16230230	RUOTA 6.00-16 COMPL. FULDA				
3	F06120116	RUOTA 6.50/80-15 COMPL.	UPRIGHT- WIDE RUBBERED WHEEL	MONT. ROUE CAOUTCHOUT. LARG.	STZNDER BREITES GUMMIRAD	MONT.RUEDA DE GOMADA LARGA
4	F06120115	RUOTA GOMMATA LARGA SX COMPL.	UPRIGHT- WIDE RUBBERED WHEEL	MONT. ROUE CAOUTCHOUT. LARG.	STZNDER BREITES GUMMIRAD	MONT.RUEDA DE CAUCHO ANCHA
5	G16230101	ASSE RUOTA D.45	WHEEL AXIS D.45	AXE ROUE D.45	RADACHSE D.45	EJE RUEDA D.45
6	G16230430	DISTANZIALE DI BATTUTA ZN	GALVANIS. SPACER STOP	ECARTEUR DE BUTEE ZN	DISTANZST_CKANSCHLAG ZN	DISTANCIADOR DE TOPE ZN
7	F04010143	CUSC.D45 D75 B16 6009 2RS1 EX>	BEARING 6009 2RS1	ROULEMENT 6009 2RS1	LAGER 6009 2RS1	COJINETE 6009 2RS1
8	G16230440	DISTANZIALE CUSCIN.-INGRANAG.				
9	F02100124	SPINA E.P. 6X 50 U6873 C70 BR	PIN EL. .6 X50 DIN 1481	FICHE EL. 6 X50 DIN 1481	SPANNSTIFT 6 X50 DIN 1481	CLAVIJA EL.6 X50 DIN 1481
10	F01200244	DADO M 8X1,25 U5588 6.8 ZN	NUT M8	ECROU M8	MUTTER M8	DADO M8
11	F01410051	ROS.M8 8,4X 17X1,6 U6592 ZN	PLANE WASHER D.8	RONDELLE D.8	SCHEIBE D.8	ARANDELA D.8
12	G16213451	RASCHIATERRA R.6.00-16				
13	F01020440	VITE M 8X1,25X25 U5739 8.8 ZN	BOLT M8 X25 5739 8.8 ZN	VIS M8 X25 5739 8.8 ZN	SCHRAUBE M8 X25 5739 8.8 ZN	TORNILLO M8 X25 5739 8.8 ZN
14	F01250052	DADO COLON. 18X1,5 ZN	COLUMN NUT 18X1,5 STUD BOLT	ECROU 18X1,5 COLONNE	SCHRAUBBOLZENMUTTER 18X1,5	TUERCA 18X1,5 COLUMNA
15	F06120070	RUOTA CP 10.0/75-15.3 AM 10 PR				
16	F01020510	VITE M12X1,75X30 U5739 8.8 ZN	BOLT M 12X30	VIS M 12X30	SCHRAUBE M 12X30	TORNILLO M 12X30
17	G16230450	FLANGIA RUOTA 10.0-75/15	10.0-75/15 WHEEL FLANGE	BRIDE ROUE 10.0-75/15	FLANSCH RAD 10.0-75/15	BRIDA RUEDA 10.0-75/15
18	G16230320	DISTANZIALE ASSE RUOTA				
19	G16214400	RASCHIATERRA R.10.0/75-15				
20	F06120206	CERCHIO 3.00 D 15 PV RAL 9001				
21	F06120135	CAMERA 15 T 340	CHAMBER 15 T 340	CHAMBRE 15 T 340	KAMMER 15 T 340	CAMARA 15 T 340
22	F06120180	COPERTURA 6.5/80-15 IM 110 6PR	COVERING 6.5/80-15 IM 110 2PR	COUVERTURE 6.5/80-15 IM110 4PR	MANTEL .5/80-15 IM 110 2PR	CUBIERTA 6.5/80-15 IM 110 2PR
23	F06120040	CERCHIO 4.00 E 16	RING 4.00 E	JANTE 4.00 E 16	REIFEN 4.00 E	LLANTA 4.00 E
24	F06120137	CAMERA 31 A 16	CHAMBER 31 A-16	CHAMBRE 31 A-16	KAMMER 31 A-16	CAMARA 31 A-16
25	F06120175	COPERTURA 6.00-16 6 PR	COVER 6.00-16 6 PR	COUVERTURE 6.00-16 6 PR	ABDECKUNG 6.00-16 6 PR	CUBIERTA 6.00-16 6 PR
26	F06120023	CERCHIO 9.00 15.3 CANALE 6F	RING 9.00-15.3 CHANNEL 6F	JANTE 9.00-15.3 CANALE 6F	REIFEN 9.00-15.3 KANAL 6F	LLANTA 9.00-15.3 CANAL 6F
27	F06120132	CAMERA 10.0/75-15.3 VG	CHAMBER 10.0/75-15.3 VG	CHAMBRE 10.0/75-15.3 VG	KAMMER 10.0/75-15.3 VG	CAMARA 10.0/75-15.3 VG
28	F06120156	COPERTURA 10.0/75-15.3 AM 10PR	COVERING 10.0/75-15.3 PR10 AM	COUVERTURE 10/75-15.3 PR10 AM	MANTEL 10.0/75-15.3 PR10 AM	CUBIERTA 10.0/75-15.3 PR10 AM
29	G67002019	ROMPITRACCIA	TRACEBREAKER	BRIS. DE TRACES	SPURMESSER	ROMPEHUELLA
30	F01020528	VITE M12X1,75X40 U5739 10.9 ZD	SCREW 12X40 5739 10.9 ZN	VIS 12X40 5739 10.9 ZN	SCHRAUBE 12X40 5739 10.9 ZN	TORNILLO 12X40 5739 10.9 ZN
31	G67002020	RINFORZO ROMPITRACCIA	ROWBRAKER REINFORC.	RENFORT EFFACEUR DE TRACES	VERST-RKUNG SPURLOCKERERZINKEN	REFUERZO ROMPETRAZAS
32	F01200294	DADO M12X1,75 U5588 6.8 BR	NUT 10 UNI 5588 6.8	ECROU 10 UNI 5588 6.8	MUTTER 12 UNI 5588 6.8	TUERCA 10 UNI 5588 6.8
33	F01020512	VITE M12X1,75X35 U5739 8.8 ZN	SCREW M 12X35	VIS M 12X35	SCHRAUBE M 12X35	TORNILLO M 12X35
34	F01020421	VITE M 6X1 X 25 U5739 A2 IX	SCREW M6X1 X25 U5739 A2 IX	VIS M6X 1X25 U5739 A2 IX	SCHRAUBE M6X1X 25 U5739 A2 IX	TORNILLO M6X1X 25 U5739 A2 IX
35	F01220033	DADO M10X 1,5 D980 8 ZN	NUT M10X 1,5 D980 8 ZB	ECRO.M10X 1,5 D980 8 ZB	MUTT.M10X 1,5 D980 8 ZB	TUER.M10X 1,5 D980 8 ZB
36	G19204220	SUPPORTO ROMPITRACCIA	TRACE BREAKER SUPPORT	SUPPORT BRISEUR DE TRACES	SPURRZUMERHALTERUNG	SOPORTE ROMPEDOR DE RASTRO
37	G16019090	SCONTRO 90 X50 -10 2F11 62	STRIKER 90 X50 -10 2F11 62	BUTEE 90 X50 -10 2F11 62	ANSCHLAG 90 X50 -10 2F11 62	ELEMENTO DE EMPALME 90 X50 -10
38	F01020138	VITE M10X1,5X 90 U5737 10.9 ZD	SCREW M10X 1,5X 90 U5737 10.9Z	VIS M10X 1,5X 90 U5737 10.9ZG	SCHRAUBE M410X 1,5X 90 U5737 1	TORNIL. M10X 1,5X 90 U5737 10.
39	F01220255	DADO M14X 2 D980 8 ZN	NUT- TRISTOP M14	ECROU TRISTOP M14	MUTTER TRISTOP M14	TUERCA TRISTOP M14
40	G16214020	SUPPORTO ROMPITRACCIA				
41	F20110770	CAV.Q.M14X 2X 50 96X119 ZN	U-BOLT M14X96 - 119 ZN	CAVALIER M14X96 - 119 ZN	VERBINDUNG M14X96 - 119 ZN	PERNO EN U M14X96 - 119 ZN
42	F01410076	ROS.M12 13X 24X2,5 U6592 ZN	PLANE WASHER D12 UNI 6592 ZN	RONDELLE D12 UNI 6592 ZN	SCHEIBE D12 UNI 6592 ZN	ARANDELA D12 UNI 6592 ZN
43	F20110800	CAV.Q.M16X 2X 40 118X135 ZN	CONNE.M16X 2X 40 118X135 ZB	ATTEL.M16X 2X 40 118X135 ZB	VERBI.M16X 2X 40 118X135 ZB	PERNO M16X 2X 40 118X135 ZB
44	F01220266	DADO M16X 2 D980 8 ZN	NUT M16X 2 D980 8 ZG	ECR. M16X 2 D980 8 ZG	MUT. M16X 2 D980 8 ZG	TUER.M16X 2 D980 8 ZG
45	F20120013	VOMERE REVERSIBILE 36X6X210	COULTER 36X6X210	SOC 36X6X210	PFLUGSCHAR 36X6X210	REJA 36X6X210
46	G67002011	BULLONE TESTA OVALE M10X35	OVAL HEAD BOLT M10X35	BOULON TETE OVALE M10X35	SCHRAUBE OVALER KOPFM10X35	PERNO CABEZA OVALADA M10X35
47	G16214640	ASSE RUOTA				
48	F04010186	CUSC.D45 D85 B19 6209 2RS1	BEARING 6209 2RS1	ROULEMENT 6209 2RS1	LAGER 6209 2RS1	COJINETE 6209 2RS1
49	F04010175	CUSC.D35 D72 B17 6207	BEARING 6207	ROULEMENT 6207	LAGER 6207	COJINETE 6207
50	F20110715	CAV.Q.M10X 1,5X 30 61X 80 ZN				

TAV. 052

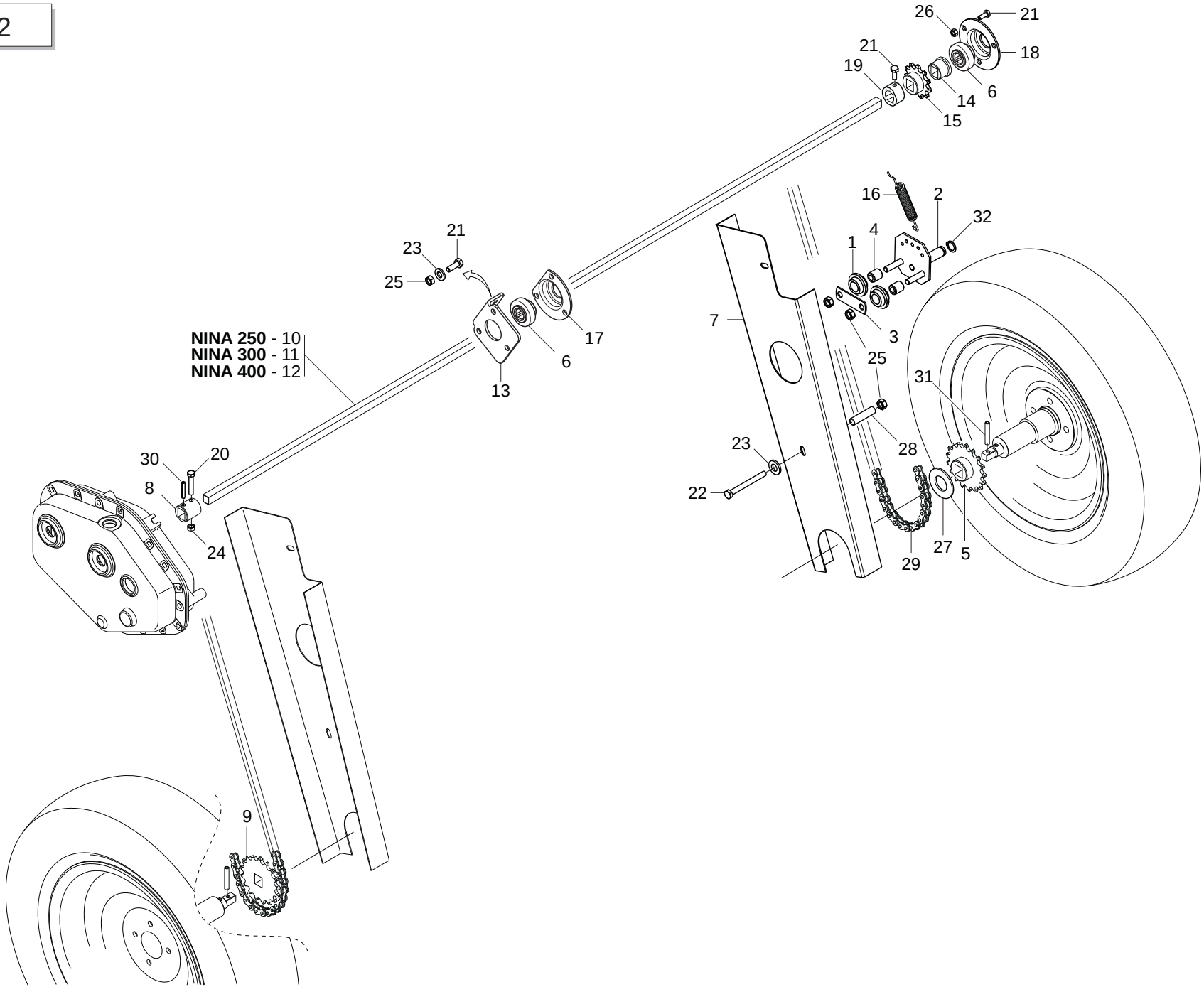

GASPARDO

cod. G19530853

DOPPIA TRASMISSIONE

TAV. 052

Pos.	Cod.	Descrizione	Description	Description	Benennung	Descripcion
1	G07000134	RULLO TENDICATENA	CHAIN TIGHTENER ROLLER	ROULEAU TENDEUR DE CHAINE	ROLLE KETTENSPANNER	RODILLO TENSOR DE LA CADENA
2	G07000269	ASS.TENDICATENA	CHAIN TIGHTENER	ESSIEU TENDEUR DE CHAINE	EINHEIT KETTENSPANNER	TENSOR DE CADENA
3	G07000272	PIASTRINA CHIUSURA TENDICATENA	CHAIN TIGHTENER CLOSING PLATE	PLAQUETTE FERM. TEND. DE CHAIN	KETTENSPANNERSCHLIESS-PLATTE	PLACA DE CIERRE TENSOR DE CADE
4	G07000273	BUSSOLA TENDICATENA	CHAIN TIGHTENER BUSH	DOUILLE TENDEUR DE CHAINE	BsCHSE KETTENSPANNER	CASQUILLO TENSOR DE CADENA
5	G07002669	INGRANAGGIO R.L. Z-20 DX	FREE WHEEL GEAR Z-20 LEFT	ENGRENAGE ROUE LIBRE Z-20 GCH	ZAHNRAD FREILAUF Z-20 LINKER	ENGRANAJE R.LIBRE Z-20 IZQ
6	G14830390	CUSCINETTO FORO QUADRO	SQUARE-HOLED BEARING	ROULEMENT AL+SAGE CARR+	VIERKANTLAGER	COJINETE ORIFICIO CUADRADO
7	G16230490	CARTER TRASMISSIONE				
8	G16230050	BOCCOLA ZN	BUSHING GALVAN	BOITE ZN	BsCHSE ZN	CASQUILLO ZN
9	G13930380	PIGNONE Z20 1/2-3/16 D.16,4				
10	G16230130	ASSE TRASM.L.1980				
11	G13732200	ASSE TRASMISSIONE L.2485	TRANSMISSION AXLE L2485	AXE TRANSMISSION L.2485	sBERTRAGUNGSACHSE L.2485	EJE TRANSMISIN L 2485 A
12	G16230150	ASSE TRASM.L.3480				
13	G16230500	SUPPORTO DOPPIA TRASMISSIONE				
14	G16230170	DISTANZIALE CUSCINETTO INGR.	GEAR ROLLER BEARING SPACER	ECARTEUR ROULEMENT ENGRENAGE	DISTANZST_CK LAGER R-DERPAAR	DISTANCIADOR COJINETE ENGR.
15	G16230180	PIGNONE Z-11 ZN	PINION Z 11 GALVAN	PIGNON Z 11 ZN	RITZEL Z 11 ZN	PI¾N Z 11 ZN P
16	G18903280	MOLLA TENDICATENA	TENSIONER SPRING	RESSORT TENDEUR DE CHAINE	FEDER KETTENSPANNER	MUELLE TENSOR DE LA CADENA
17	G22230086	SUPPORTO CUSCINETTO TAGLIATO	CUT BEARING SUPPORT	SUPPORT PALIER COUPE	HALTERUNG LAGER MIT SCHNITT	SOPORTE COJINETE CORTADO
18	G22230094	SUPPORTO CUSCINETTO	BEARING SUPPORT	SUPPORT PALIER	LAGERBsCHSE	SOPORTE COJINETE
19	G22500142	FERMO ASSI	AXLE STOP	ARRET AXES	FESTSTELLVORRICHTUNG ACHSEN	BLOQUEO EJES
20	F01020040	VITE M 6X 1X 40 U5737 8.8 ZN	BOLT 6 X40 5737 8.G GALVANIZED	VIS 6 X40 5737 8.G ZN	SCHRAUBE 6 X40 5737 8.G ZN	TORNILLO 6 X40 5737 8.G ZN
21	F01020432	VITE M 8X1,25X16 U5739 8.8 ZN	BOLT M 8X16	VIS M 8X16	SCHRAUBE M 8X16	TORNILLO M 8X16
22	F01020083	VITE M 8X1,25X70 U5737 8.8 ZN	BOLT M 8X70	VIS M 8X70	SCHRAUBE M 8X70	TORNILLO M 8X70
23	F01410051	ROS.M8 8,4X 17X1,6 U6592 ZN	PLANE WASHER D.8	RONDELLE D.8	SCHEIBE D.8	ARANDELA D.8
24	F01200022	DADO M 6X 1 U5587 6.8 ZN	NUT M6	ECROU M6	MUTTER M6	DADO M6
25	F01220022	DADO M 8X1,25 D980 8 ZN	SELF LOCKING NUT M8X1,25 980V	ECROU AUTOBL. M8X1,25 980-V	SELBSTSP.MUTT. M8X1,25 980-V	DADO AUTOBL. M8X1,25 980-V
26	F01200244	DADO M 8X1,25 U5588 6.8 ZN	NUT M8	ECROU M8	MUTTER M8	DADO M8
27	F01410135	ROS.M22 23X 39X 3 U6592 ZN	PLANE WASHER D.22	BAGUE D.22	SCHEIBE D.22	ARANDELA D.22
28	G16230640	DISTANZIALE CARTER TRSM.				
29	F06080134	CATENA 1/2 ISO 084 104 MAGLIE				
30	F02100114	SPINA E.P. 6X 30 U6873 C70 BR	ELASTIC PIN 6X30	GOUJON ELASTIQUE 6X30	SPANNHUELSE 6X30	ESPINA ELASTICA 6X30
31	F02100118	SPINA E.P. 6X 36 U6873 C70 BR	PIN EL. 6 X36 DIN 1481	FICHE EL. 6 X36 DIN 1481	SPANNSTIFT 6 X36 DIN 1481	CLAVIJA EL.6 X36 DIN 1481
32	F02050604	ANELLO E. DE 14X 1 U7435 C70	STOP RING 14 UNI 7435-75	BAGUE ARR.14 UNI 7435-75	RING 14 UNI 7435-75	ANILLO PARADA 14 UNI 7435-75

TAV. 060

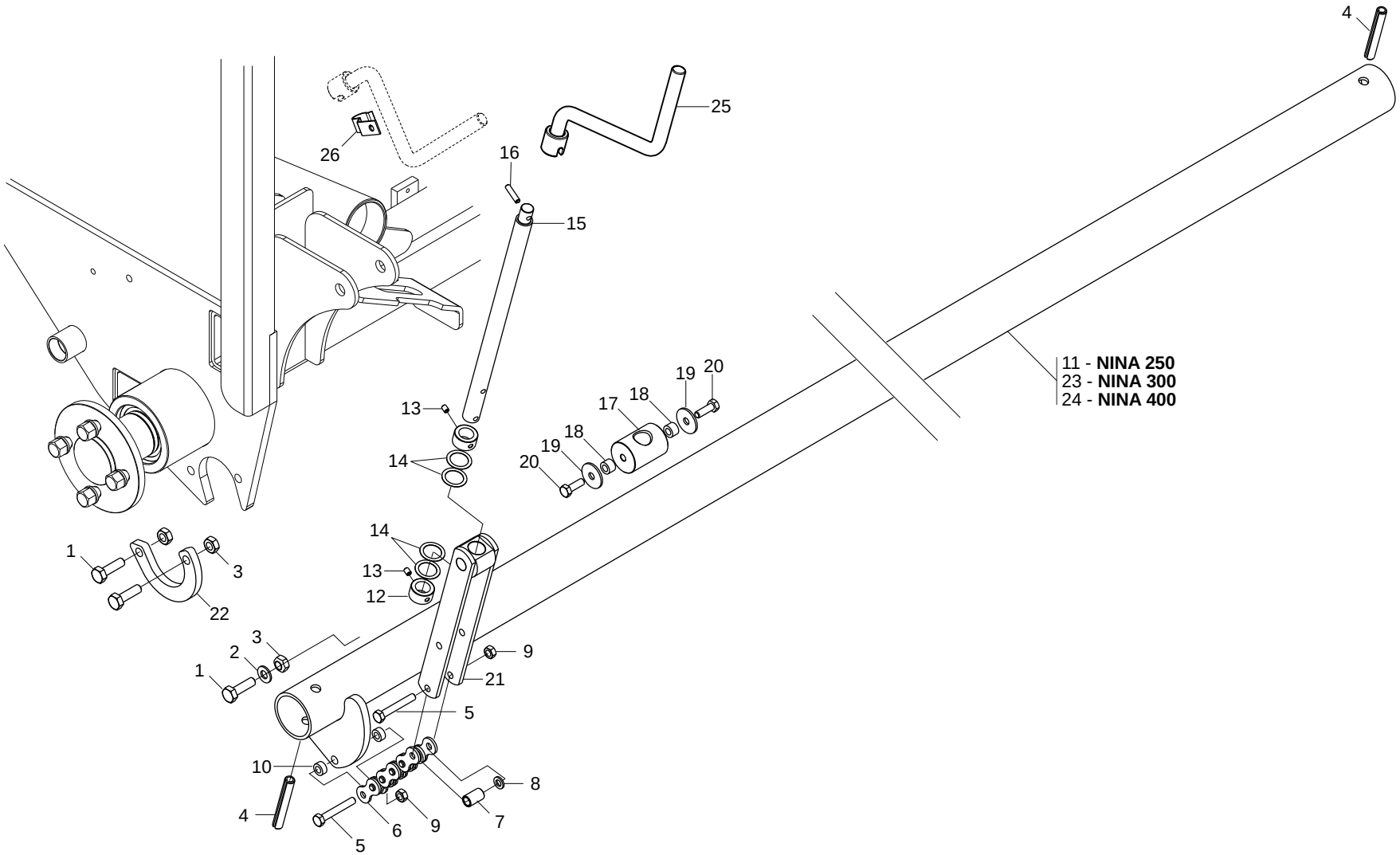

GASPARDO

REGOLAZIONE PRESSIONE ASSOLCATORI

TAV. 060

Pos.	Cod.	Descrizione	Description	Description	Benennung	Descripcion
1	F01020479	VITE M10X 1,5X35 U5739 8.8 ZN	BOLT M 10X35	VIS M 10X35	SCHRAUBE M 10X35	TORNILLO M 10X35
2	F01420060	ROS.M10 10,5X 30X2,5 U6593 ZN	WASHER 10,5X30	RONDELLE 10,5X30	SCHEIBE 10,5X30	ARANDELA 10,5X30
3	F01220033	DADO M10X 1,5 D980 8 ZN	NUT M10X 1,5 D980 8 ZB	ECRO.M10X 1,5 D980 8 ZB	MUTT.M10X 1,5 D980 8 ZB	TUER.M10X 1,5 D980 8 ZB
4	F02100181	SPINA E.P. 12X 80 U6873 C70 BR	PIN EL. 12X80 DIN 1481	FICHE EL. 12X80 DIN 1481	SPANNSTIFT 12X80 DIN 1481	CLAVIJA EL.12X80 DIN 1481
5	F01020075	VITE M8X1,25X 55 U5737 8.8 ZN	BOLT 8 X55 5737 8.8 GALVANIZED	VIS 8 X55 5737 8.8 ZN	SCHRAUBE 8 X55 5737 8.8 ZN	TORNILLO 8 X55 5737 8.8 ZN
6	F06080191	CATENA 1 ISO 16B 6 MAGLIE				
7	G18801480	BOCCOLA 10,25X14 X23 ZN	BUSHING 10,25 X 14 X 23 GALVA	BOITE 10,25X14 X23 ZN	BsCHSE 10,25X14 X23 ZN	CASQUILLO 10,25X14 X23 ZN
8	F01410051	ROS.M8 8,4X 17X1,6 U6592 ZN	PLANE WASHER D.8	RONDELLE D.8	SCHEIBE D.8	ARANDELA D.8
9	F01220022	DADO M 8X1,25 D980 8 ZN	SELF LOCKING NUT M8X1,25 980V	ECROU AUTOBL. M8X1,25 980-V	SELBSTSP.MUTT. M8X1,25 980-V	DADO AUTOBL. M8X1,25 980-V
10	G20980050	BOCCOLA 15X7X8,5 ZN	BUSHING 15X7X8-5 ZN	BOITE 15X7X8-5 ZN	BsCHSE 15X7X8-5 ZN	CASQUILLO 15X7X8-5 ZN
11	G16214140	TUBO TENSIONE MOLLE				
12	G16912580	BUSSOLA FILETTATA S-SC ZN	GALVANIS. THREADED BUSH	MANCHON FILETE S-SC ZN	GEWINDEB_CHSE S-SC ZN	CASQUILLO FILETEADO S-SC ZN
13	F01050085	VIT.M 6X 1X 8 U5927	GRUB-SCREW 6X 8 UNI 5927	GOUJON 6X 8 UNI 5927	STIFT 6X 8 UNI 5927	TORNILLO SIN CABEZA 6X 8 UNI 5
14	G20970100	RONDELLA 30X0,5X22 ACC.	WASHER 30X0-5X22 ACC.	RONDELLE 30X0-5X22 ACIER	UNTERLEGSCHEIBE 30X0-5X22 ACC.	ARANDELA 30X0-5X22 ACC.
15	G16018710	VITE REGOLAZIONE TPN 20 ZN	ADJUSTING SCREW TPN 20 GALVAN	VIS RÉGLAGE TPN 20 ZN	STELLSCHRAUBE TPN 20ZN	TORNILLO REGULACIÓN TPN 20 ZN
16	F02100110	SPINA E.P. 6X 26 U6873 C70 BR	PIN EL. 6 X26 DIN 1481	FICHE EL.6 X26 DIN 1481	SPANNSTIFT 6 X26 DIN 1481	CLAVIJA EL.6 X26 DIN 1481
17	G16340970	BOCCOLA TIRAMOLLA SUP.ZN				
18	G18801580	BOCCOLA 8,5 X15 X10 ZN	BUSH 8.5 X15 X10	DOUILLE 8,5 X15 X10	BUCHSE 8,5 X15 X10	MANGUITO 8,5 X15 X10
19	F01420048	ROS.M8 8,4X 24X 2 U6593 ZN	PLANE WASHER D.8	RONDELLE D.8	SCHEIBE D.8	ARANDELA D.8
20	F01020436	VITE M 8X1,25X 20 U5739 8.8 ZN	BOLT M 8X20	VIS M 8X20	SCHRAUBE M 8X20	TORNILLO M 8X20
21	G16313810	FORCELLA TIRO MOLLE ZN				
22	G16312530	ANELLO CHIUSURA INFERIORE ZN	RING	BAGUE	RING	ANILLO
23	G16213230	TUBO TENSIONE MOLLE				
24	G16214360	TUBO TENSIONE MOLLA				
25	G07000428	MANICO CAMBIO *				
26	G07002493	GANCIO SUPPORTO MANIGLIA M ZN	GALVAN. HANDLE SUPPORT HOOK M	CROCHET SUPPORT POIGNEE M ZN	HAKEN GRIFFHALTERUNG M ZN	GANCHO SOPORTE MANIJA M ZN

TAV. 070

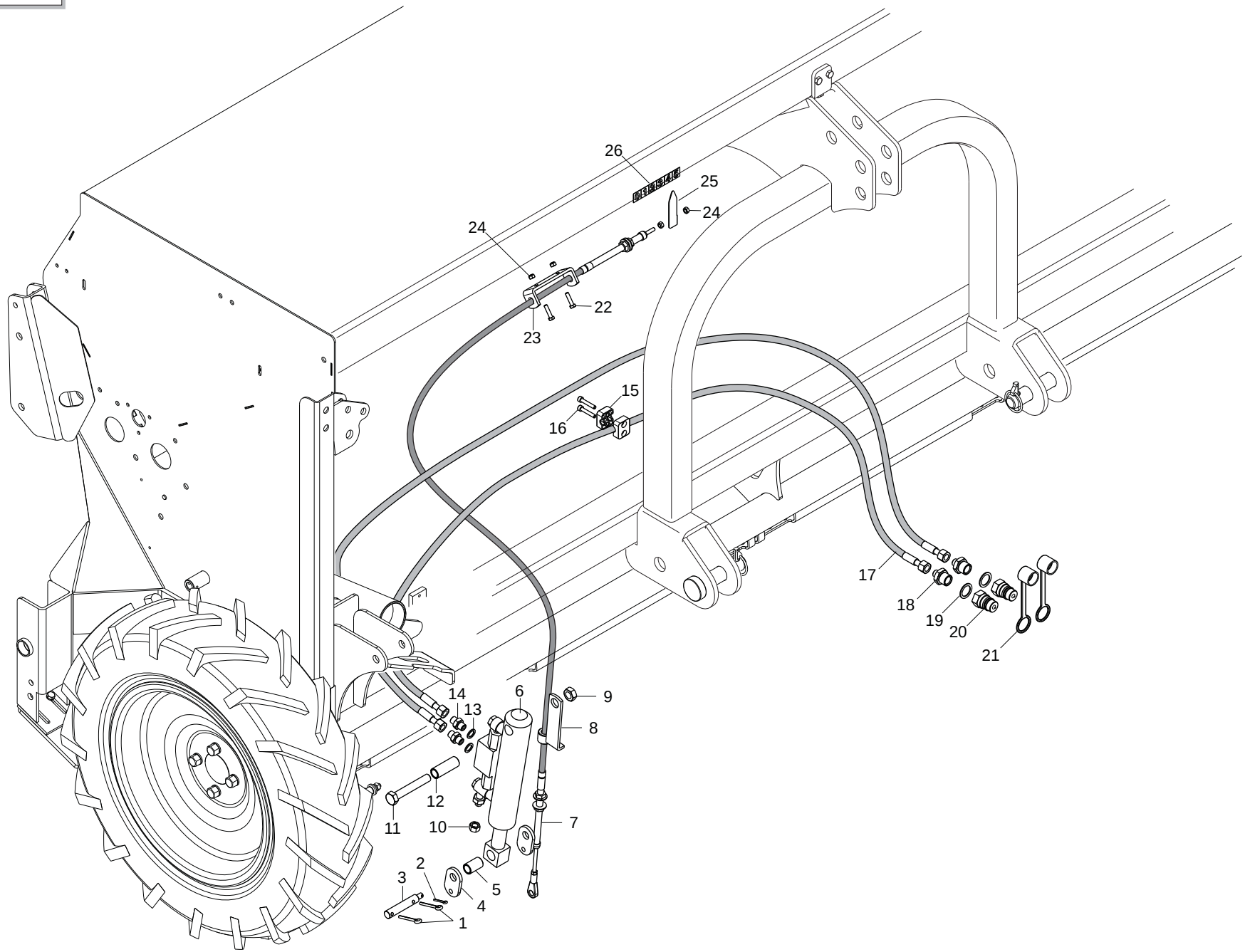

GASPARDO

REGOLAZIONE OLEODINAMICA PRESSIONE ASSOLCATORI

TAV. 070

Pos.	Cod.	Descrizione	Description	Description	Benennung	Descripcion
1	F02200228	COPIGLIA 5X 35 U1336 ZN	SPLIT PIN 5 X35 1336 GALVAN.	GOUPILLE 5 X35 1336 ZN	SPLINT 5 X35 1336 ZN	PASADOR 5 X35 1336 ZN
2	F02200162	COPIGLIA 3X 20 U1336 ZN	SPLIT PIN 3 X20 1336 GALVAN.	GOUPILLE 3 X20 1336 ZN	SPLINT 3 X20 1336 ZN	PASADOR 3 X20 1336 ZN
3	G16340980	PERNO ATTACCO CILINDRO ZN	PIN	PIVOT	ZAPFEN	PERNO
4	G16313920	PIATTO ATTACCO CATENA ZN				
5	G18802780	BOCCOLA 15 X20 X32 ZN	BUSHING 15 X20 X32 ZN	BOITE 15 X20 X32 ZN	BUCHSE 15 X20 X32 ZN	CASQUILLO 15 X20 X32 ZN
6	G16910340	CILINDRO SOLLEVAMENTO FALCIONI	CUTTER LIFTING CYLINDER	CYLINDRE LEVAGE SOC	ZYLINDER HEBEARM S-SCHAR	CILINDRO ELEVADOR ARADO
7	F06240012	CAVO FLESSIBILE 3,5 M	3.5 M FLEXIBLE CABLE	CABLE FLEXIBLE 3,5 M	FLEXIBLES KABEL 3,5 M	CABLE FLEXIBLE
8	G16018760	FERMO CORDA	ROPE STOP	ARRET CORDE	SEILFESTSTELLVORRICHTUNG	BLOQUEO CUERDA
9	F01220255	DADO M14X 2 D980 8 ZN	NUT- TRISTOP M14	ECROU TRISTOP M14	MUTTER TRISTOP M14	TUERCA TRISTOP M14
10	F03150678	TAPPO FEMMINA DA 1/4 ZN	1/4 FEMALE ZG PLUG	BOUCHON FEMELLE DE 1/4 ZG	PFROPFEN 1/4 ZG	TAPN HEMBRA DE 1/4 ZG
11	F01020212	VITE M14X 2X 90 U5737 8.8 ZN	BOLT M14X 2X 90 U5737 8.8 ZB	VIS M14X 2X 90 U5737 8.8 ZB	SCHARUBE M14X2X 90 U5737 8.8ZB	TORNILLO M14X 2X 90 U5737 8.8
12	G18802770	BOCCOLA 15 X20 X55 ZN	BUSHING 15 X20 X55 ZN	BOITE 15 X20 X55 ZN	BUCHSE 15 X20 X55 ZN	CASQUILLO 15 X20 X55 ZN
13	F01500012	RONDELLA IN RAME 1/4"	WASHER	RONDELLE	SCHEIBE	ARANDELA
14	F03150266	NIPPLO MM CIL-CIL 1/4-1/4 ZN	NIPPLE GALV.CYL.MALE 1/4 ZN	NIPPLE MALE CYL. 1/4 ZN	NIPPELZYL.1/4 ZN	NIPLE MACHO CIL.1/4 ZN
15	F03151136	COLLARE A1-12 S	COLLAR A1-12 S	COLLIER A1-12 S	BUNDRING A1-12 S	ARGOLLA A1-12 S
16	F01040066	VITE M 6X 1X35 U5931 8.8 ZN	BOLT 6 X35 5931 8.G GALVANIZ.	VIS 6 X35 5931 8.G ZN	SCHRAUBE 6 X35 5931 8.G ZN	TORNILLO 6 X35 5931 8.G ZN
17	G14215341	TUBO 1/4R2 F-F 1/4 L.4000	PIPE 1/4R2 F-F 1/4 L.4000	TUBE 1/4R2 F-F 1/4 L.4000	ROHR 1/4R2 F-F 1/4 L.4000	TUBO 1/4R2 H-H 1/4 L.4000
18	F03150211	NIPPLO MM CIL-CIL 1/2-1/4 ZN	NIPLE 1/4-1/2	NIPLE 1/4-1/2	NIPLE 1/4-1/2	NIPLE 1/4-1/2
19	F03151237	ROS. 21 X27X1,5 RAME -1/2"	1/2 COPPER WASHER	RONDELLE CUIVRE 1/2	UNTERLEGSCHEIBE KUPFER 1/2	ARANDELA COBRE 1/2
20	F03150935	INNESTO RAP.MASCH.1/2 A VALV.	QUICK CONNECT MALE CONE 1/2 CO	CONNEXION RAPIDE MALE CONE 1/2	SCHNELLKUPPLUNG GEWINDE KONISC	ACOPLAMIENTO RAPIDO MACHO CONO
21	F05150325	CAPPUC.F X INN.M RAP.1/2 ROSSO	COVER 1/2	COUVERCLE 1/2	DECKEL 1/2	TAPA 1/2
22	F01020406	VITE M 6X 1X 25 U5739 8.8 ZN	BOLT M 6X25	VIS M 6X25	SCHRAUBE M 6X25	TORNILLO M 6X25
23	G16018770	ATTACCO CORDA SUPERIORE	UPPER ROPE COUPLING	FIXATION SUP. CORDE	OBERE KUPPLUNG	CONEXIN SUPERIOR CUERDA
24	F01220011	DADO M 6X 1 D980 8 ZN	SELF LOCKING NUT M6	ECROU AUTOBL. M6	SELBSTSPERR.MUTTER M6	DADO AUTOBL. M6
25	G16018950	INDICATORE ZN	INDICATOR	INDICATEUR	ANZEIGER	INDICADOR
26	G19705620	DECAL.REGOLAZIONE 0-5	0-5 ADJUSTMENT STICKER	ETIQ. REGLAGE 0-5	AUFKLEBER EINSTELLUNG 0-5	ETIQ. REGULACIËN 0-5

TAV. 081

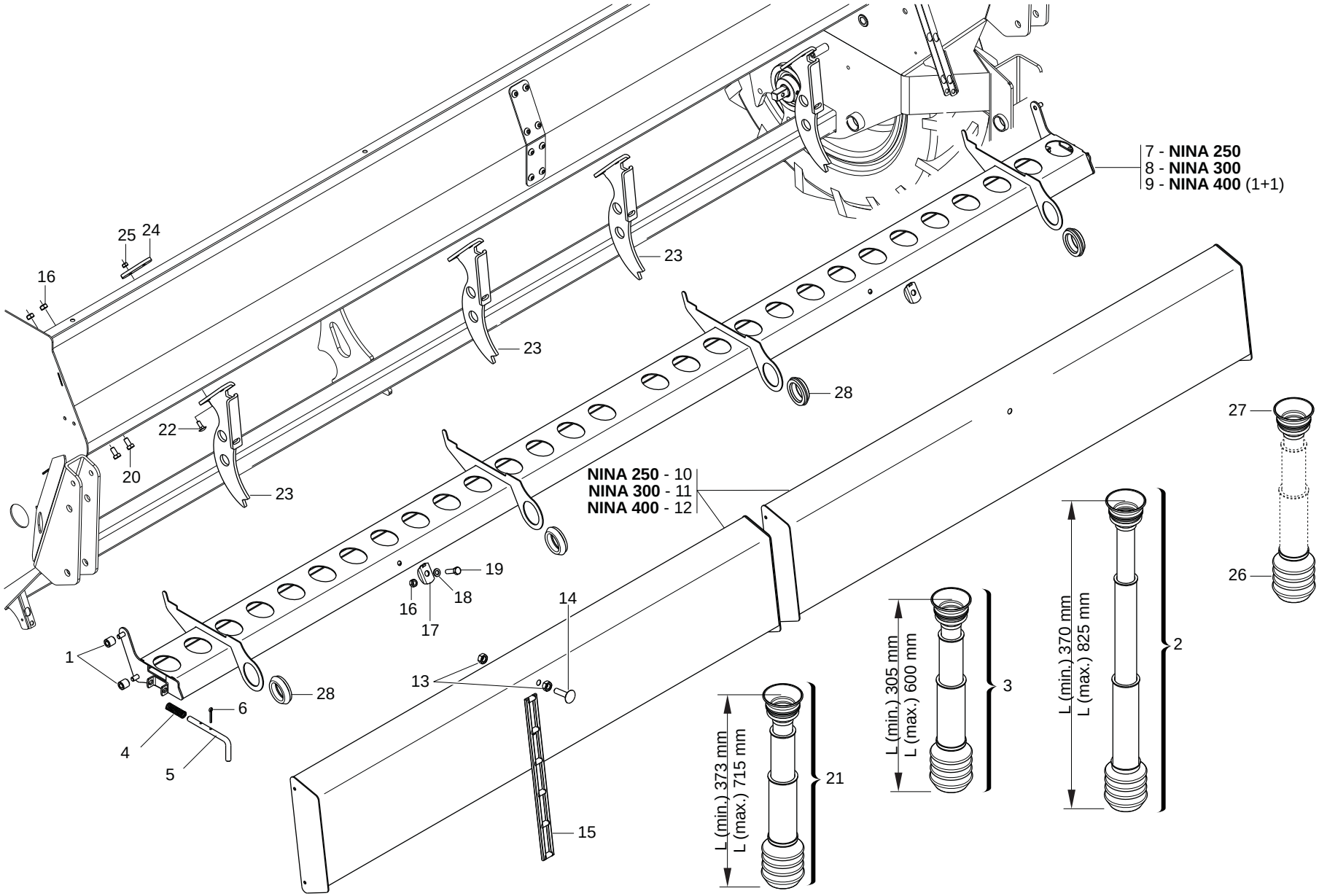

GASPARDO

VASCHETTE SCARICO SEMI

TAV. 081

Pos.	Cod.	Descrizione	Description	Description	Benennung	Descripcion
1	G18803050	BOCCOLA 8,5X16X16 PL				
2	G07002742	TUBO TELESCOPICO LUNGO	TELESCOPIC PIPE LONG	TUBE TELESCOP COMPL LONG ARR	LANGES TELESKOPROHR	TUBO TELESCPICO LARGO T
3	G07002751	TUBO TELESCOPICO CORTO COMPL				
4	G18904060	MOLLA CHIAVISTELLO BUSSOLIERA	SPRING	RESSORT	FEDER	MUELLE
5	G16920140	CHIAVISTELLO BLOCCO BUSSOLIERA	LATCH	VERROU	RIEGEL	PESTILLO
6	F02200162	COPIGLIA 3X 20 U1336 ZN	SPLIT PIN 3 X20 1336 GALVAN.	GOUPILLE 3 X20 1336 ZN	SPLINT 3 X20 1336 ZN	PASADOR 3 X20 1336 ZN
7	G16221401	ASS.BUSSOLIERA 250				
8	G16221281	ASS.BUSSOLIERA 300				
9	G16221500	BUSSOLIERA 400				
10	G16221420	VASCHETTA PROVA SEMINA				
11	G16221250	VASCHETTA PROVA SEMINA				
12	G16221480	VASCHETTA PROVA SEMINA 400				
13	F01200270	DADO M10X 1,5 U5588 6.8 ZN	NUT M10	ECROU M10	MUTTER M10	DADO M10
14	F01060076	BUL.M10X 1,5X 40 U5732 4.6 BR	BOLT 10X40 5732 8.G GALVANIZ.	VIS 10X40 5732 8.G ZN	SCHRAUBE 10X40 5732 8.G ZN	TORNILLO 10X40 5732 8.G ZN
15	F06080487	CATENA AGGANCIO TELO IN GOMMA	RUBBER FRAME CONNECTION CHAIN	CHA+NE ACCROCHAGE TOILE EN CAO	KETTE BEFESTIGUNG GUMMITUCH	CADENA ENGANCHE LONA DE CAUCHO
16	F01220022	DADO M 8X1,25 D980 8 ZN	SELF LOCKING NUT M8X1,25 980V	ECROU AUTOBL. M8X1,25 980-V	SELBSTSP.MUTT. M8X1,25 980-V	DADO AUTOBL. M8X1,25 980-V
17	G16040130	RONDELLA FERMO DENTE ZN	STOP WASHER	RONDELLE D'ARRET	FESTSTELLSCHEIBE	ARANDELA DE BLOQUEO
18	F01410051	ROS.M8 8,4X 17X1,6 U6592 ZN	PLANE WASHER D.8	RONDELLE D.8	SCHEIBE D.8	ARANDELA D.8
19	F01020440	VITE M 8X1,25X25 U5739 8.8 ZN	BOLT M8 X25 5739 8.8 ZN	VIS M8 X25 5739 8.8 ZN	SCHRAUBE M8 X25 5739 8.8 ZN	TORNILLO M8 X25 5739 8.8 ZN
20	F01020432	VITE M 8X1,25X16 U5739 8.8 ZN	BOLT M 8X16	VIS M 8X16	SCHRAUBE M 8X16	TORNILLO M 8X16
21	G07002741	TUBO TELESCOPICO CORTO	TELESCOPIC PIPE SHORT	TUBE TELESCOP COMPL COURT AVA	KURZES TELESKOPROHR	TUBO TELESCPICO CORTO T
22	F01060015	BUL.M 6X 1X 25 U5732 4.6 ZN				
23	G16320672	SUPPORTO ALBERO TRAMLINE				
24	G16313831	RINFORZO SUPPORTO TRAMLINE				
25	F01200232	DADO M 6X 1 U5588 6.8 ZN				
26	G07000126	CUFFIA ATTACCO SCARPETTA	SLIDE LINKAGE HOUSING	PROTECTEUR FIXATION SABOT	FALTENBALG	ENVOLTURA CONEXIN GUA APOYO GL
27	G07000127	CUFFIA SUP.TUBO TELESCOPICO	TELESCOPIC PIPE SUPP. HOUSING	PROTECTEUR SUP. TUBE TELESCOPI	OB. KASTEN TELESKOPROHR	ENVOLTURA SUP. TUBO TELESCOPIC
28	G16221580	PROTEZIONE MANIGLIA				

TAV. 094

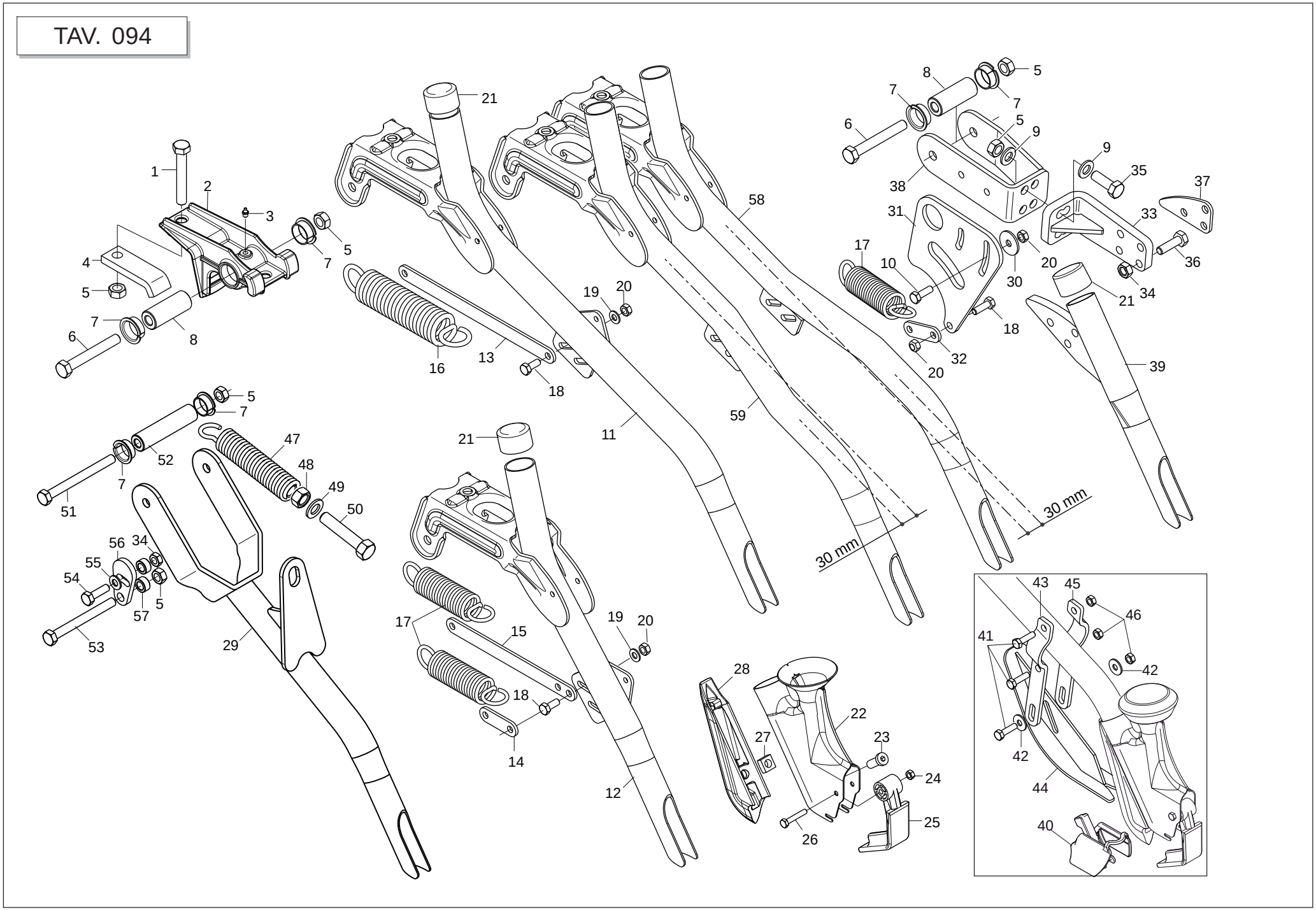

GASPARDO

ASSOLCATORI A STIVALETTO

TAV. 094

Pos.	Cod.	Descrizione	Description	Description	Benennung	Descripcion
1	F01020166	VITE M12X1,75X80 U5737 8.8 ZN	BOLT 12X80 5737 8.G GALVANIZED	VIS 12X80 5737 8.G ZN	SCHRAUBE 12X80 5737 8.G ZN	TORNILLO 12X80 5737 8.G ZN
2	G16340801	SUPPORTO SCARPETTA				
3	F01100011	ING.M 6X1 7663-A 9SMNPB28 ZN	SPHERE NIPPLE M6X1/A	GRAISSEUR A BILLES M6X1/A	KUGELFETTBsCHSE M6X1/A	ENGRAS. DE ESFERAS M6X1/A
4	G16340810	SCONTRO DI FISSAGGIO	FIXING STRIKER PLATE	BUTEE DE FIXATION	BEFESTIGUNGSANSCHLAG	ELEM. DE EMPALME DE SUJECION
5	F01220048	DADO M12X1,75 D980 8 ZN	SELF LOCKING NUT M12X1,75 980V	ECROU AUTOBL. M12X1,75 980-V	SIEHE 00553312	DADO AUTOBL. M12X1,75 980-V
6	F01020168	VITE M12X1,75X90 U5737 8.8 ZN	BOLT 12X90 5737 8.G GALVANIZED	VIS 12X90 5737 8.G ZN	SCHRAUBE 12X90 5737 8.G ZN	TORNILLO 12X90 5737 8.G ZN
7	F04150034	CUSCINETTO FLANGIATO 25X28X16				
8	G18802740	BOCCOLA 25X12X63,5	BUSHING 25X12X63,5	BOITE 25X12X63,5	BUCHSE 25X12X63,5	CASQUILLO 25X12X63,5
9	F01410076	ROS.M12 13X 24X2,5 U6592 ZN	PLANE WASHER D12 UNI 6592 ZN	RONDELLE D12 UNI 6592 ZN	SCHEIBE D12 UNI 6592 ZN	ARANDELA D12 UNI 6592 ZN
10	F01020440	VITE M 8X1,25X25 U5739 8.8 ZN	BOLT M8 X25 5739 8.8 ZN	VIS M8 X25 5739 8.8 ZN	SCHRAUBE M8 X25 5739 8.8 ZN	TORNILLO M8 X25 5739 8.8 ZN
11	G16244041	TUBO LUNGO BASSO				
12	G16042171	TUBO CORTO BASSO				
13	G16042680	TIRANTE L.303				
14	G16042500	TIRANTE L.103				
15	G16042510	TIRANTE L.263				
16	G18904360	MOLLA TENSIONAM.ELEM.LUNGO	SPRING	RESSORT	FEDER	MUELLE
17	G18904350	MOLLA TENSIONAM.ELEM.CORTO ZN	DRILL COULTER TENS. SPRING	RESSORT TENDEUR SOC	EDER SZSCHARSPANNUNG	UELLE TENSIN SURCADOR
18	F01020436	VITE M 8X1,25X 20 U5739 8.8 ZN	BOLT M 8X20	VIS M 8X20	SCHRAUBE M 8X20	TORNILLO M 8X20
19	F01410051	ROS.M8 8,4X 17X1,6 U6592 ZN	PLANE WASHER D.8	RONDELLE D.8	SCHEIBE D.8	ARANDELA D.8
20	F01220022	DADO M 8X1,25 D980 8 ZN	SELF LOCKING NUT M8X1,25 980V	ECROU AUTOBL. M8X1,25 980-V	SELBSTSP.MUTT. M8X1,25 980-V	DADO AUTOBL. M8X1,25 980-V
21	F05100195	CAPPUCCIO 36,51X25,41 NERO >				
22	G16243990	SCARPETTA INTERCAMBIABILE	CUTTER	HACHOIR	SAASCHAR	HOJA DE CORTE
23	F01040600	VIT.M10X X 30 U9327 8.8 ZN	SCREW M10X X30 9327 8.8	VIS M410X X30 9327 8.8 Z	SCHRAUBE M10X X30 9327 8	TORNIL. M10X X30 9327 8.
24	F01220011	DADO M 6X 1 D980 8 ZN	SELF LOCKING NUT M6	ECROU AUTOBL. M6	SELBSTSPERR.MUTTER M6	DADO AUTOBL. M6
25	G07002218	ANTI INTASAMENTO M	ANTI CLOGGING M	ANTI BOURRAGE SOC	VERSTOPFUNGSHEMMENDES ELEMENT	ANTI OBSTRUCCIN M A
26	F01020039	VITE M 6X 1X 35 U5737 8.8 ZN	BOLT 6 X35 5737 8.G GALVANIZED	VIS 6 X35 5737 8.G ZN	SCHRAUBE 6 X35 5737 8.G ZN	TORNILLO 6 X35 5737 8.G ZN
27	F01270010	DADO M10 17X8 D557 ZN	NUT M10 17X8 D557 ZG	ECROU M10 17X8 D557 Z	MUTTER M10 17X8 D557	TUERCA M10 17X8 D557
28	G16243760	FALCIONE SCARPETTA FS1	CUTTER	HACHOIR	SAASCHAR	HOJA DE CORTE
29	G16248281	TUBO SCARPETTE ESTERNO				
30	F01420048	ROS.M8 8,4X 24X 2 U6593 ZN	PLANE WASHER D.8	RONDELLE D.8	SCHEIBE D.8	ARANDELA D.8
31	G16248410	FINE CORSA ELEMENTO INTERMEDIO				
32	G16340860	PIATTO TIRO MOLLA CORTO	PLATE SHORT	PLATEAU COURT	TELLER KURZES	PLATO CORTO
33	G16248380	PIASTRA ASOLATA				
34	F01220033	DADO M10X 1,5 D980 8 ZN	NUT M10X 1,5 D980 8 ZB	ECRO.M10X 1,5 D980 8 ZB	MUTT.M10X 1,5 D980 8 ZB	TUER.M10X 1,5 D980 8 ZB
35	F01020512	VITE M12X1,75X35 U5739 8.8 ZN	SCREW M 12X35	VIS M 12X35	SCHRAUBE M 12X35	TORNILLO M 12X35
36	F01020484	VITE M10X 1,5X45 U5739 8.8 ZN	BOLT 10X45 5739 8.G GALVANIZED	VIS 10X45 5739 8.G ZN	SCHRAUBE 10X45 5739 8.G ZN	TORNILLO 10X45 5739 8.G ZN
37	G16248480	DISTANZIALE				
38	G16248390	SUPPORTO ELEMENTO				
39	G16248501	TUBO SCARPETTA INTERMEDIA				
40	G16243770	SCARPA SEMINA A FASCIA	BANDS CUTTER	HACHOIR BANDES	SZSCHAR BANDEL	GUA¥ADORA FAJA
41	F01020445	VIT.M 8X1,25X 30 U5739 8.8 ZN	BOLT M 8X30	VIS M 8X30	SCHRAUBE M 8X30	TORNILLO M 8X30
42	F01420048	ROS.M8 8,4X 24X 2 U6593 ZN	PLANE WASHER D.8	RONDELLE D.8	SCHEIBE D.8	ARANDELA D.8
43	G16249010	SUPPORTO SX PATTINO LIMITATORE				
44	G16248980	ASS.PATTINO LIMITATORE				
45	G16249000	SUPPORTO DX PATTINO LIMITATORE				
46	F01220022	DADO M 8X1,25 D980 8 ZN	SELF LOCKING NUT M8X1,25 980V	ECROU AUTOBL. M8X1,25 980-V	SELBSTSP.MUTT. M8X1,25 980-V	DADO AUTOBL. M8X1,25 980-V
47	G15226270	MOLLA COMPL.				
48	F01200321	DADO M16X 2 U5588 6.8 ZN	NUT M16X2 U5588 6.8 ZB	ECROU M16X2 U5588 6.8 ZB	MUTTER M16X2 U5588 6.8 ZB	TUERCA M16X2 U5588 6.8 ZB
49	F01410100	ROS.M16 17X 30X 3 U6592 ZN	PLANE WASHER D16 UNI 6592 ZN	RONDELLE D16 UNI 6592 ZN	SCHEIBE D.16 UNI 6592 ZN	ARANDELA D16 UNI 6592 ZN
50	F01020579	VITE M16X 2X80 U5739 8.8 ZN	SCREW 16X80 5739 8.G GALVANIZ.	VIS 16X80 5739 8.G ZN	SCHRAUBE 16X80 5739 8.G ZN	TORNILLO 16X80 5739 8.G ZN
51	F01020176	VITE M12X1,75X130 5737 8.G ZN	BOLT M 12X130	VIS M 12X130	SCHRAUBE M 12X130	TORNILLO M 12X130
52	G18803040	BOCCOLA 12 X25 X105,5				
53	F01020174	VITE M12X1,75X120 5737 8.8 ZN	BOLT 12X120 5737 8.8 GALVANIZ.	VIS 12X120 5737 8.8 ZN	SCHRAUBE 12X120 5737 8.8 ZN	TORNILLO 12X120 5737 8.8 ZN
54	F01020479	VITE M10X 1,5X35 U5739 8.8 ZN	BOLT M 10X35	VIS M 10X35	SCHRAUBE M 10X35	TORNILLO M 10X35
55	F01410064	ROS.M10 10,5X 20X 2 U6592 ZN	WASHER 10,5X21	RONDELLE 10,5X21	SCHEIBE 10,5X21	ARANDELA 10,5X21
56	G16213480	FERMO ELEMENTO ESTERNO ZN				
34	F01220033	DADO M10X 1,5 D980 8 ZN	NUT M10X 1,5 D980 8 ZB	ECRO.M10X 1,5 D980 8 ZB	MUTT.M10X 1,5 D980 8 ZB	TUER.M10X 1,5 D980 8 ZB
57	G20980021	BOCCOLA D.12,25X20X10	BUSHING D.12-25X20X10	BOITE D. 12-25X20X10	BsCHSE D.12-25X20X10	CASQUILLO D.12-25X20X10
58	G19248920	TUBO PIEGATO DX				
59	G19248950	TUBO PIEGATO SX				

TAV. 104

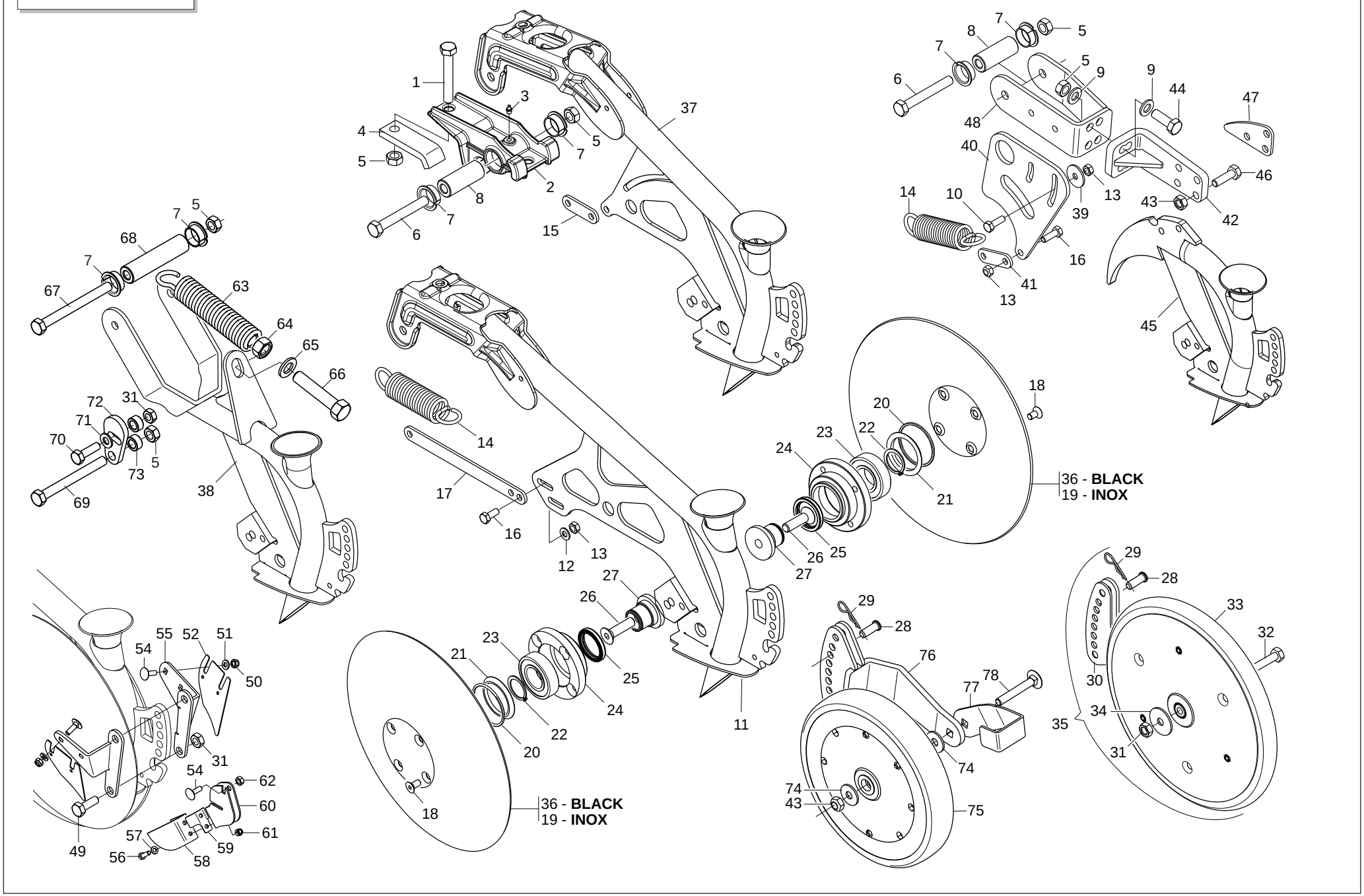

GASPARDO

ASSOLCATORI A DISCHI COREX

TAV. 104

Pos.	Cod.	Descrizione	Description	Description	Benennung	Descripcion
1	F01020166	VITE M12X1,75X80 U5737 8.8 ZN	BOLT 12X80 5737 8.G GALVANIZED	VIS 12X80 5737 8.G ZN	SCHRAUBE 12X80 5737 8.G ZN	TORNILLO 12X80 5737 8.G ZN
2	G16340801	SUPPORTO SCARPETTA				
3	F01100011	ING.M 6X1 7663-A 9SMNPB28 ZN	SPHERE NIPPLE M6X1/A	GRAISSEUR A BILLES M6X1/A	KUGELFETTBsCHSE M6X1/A	ENGRAS. DE ESFERAS M6X1/A
4	G16340810	SCONTRO DI FISSAGGIO	FIXING STRIKER PLATE	BUTEE DE FIXATION	BEFESTIGUNGSANSCHLAG	ELEM. DE EMPALME DE SUJECION
5	F01220048	DADO M12X1,75 D980 8 ZN	SELF LOCKING NUT M12X1,75 980V	ECROU AUTOBL. M12X1,75 980-V	SIEHE 00553312	DADO AUTOBL. M12X1,75 980-V
6	F01020168	VITE M12X1,75X90 U5737 8.8 ZN	BOLT 12X90 5737 8.G GALVANIZED	VIS 12X90 5737 8.G ZN	SCHRAUBE 12X90 5737 8.G ZN	TORNILLO 12X90 5737 8.G ZN
7	F04150034	CUSCINETTO FLANGIATO 25X28X16				
8	G18802740	BOCCOLA 25X12X63,5	BUSHING 25X12X63,5	BOITE 25X12X63,5	BUCHSE 25X12X63,5	CASQUILLO 25X12X63,5
9	F01410076	ROS.M12 13X 24X2,5 U6592 ZN	PLANE WASHER D12 UNI 6592 ZN	RONDELLE D12 UNI 6592 ZN	SCHEIBE D12 UNI 6592 ZN	ARANDELA D12 UNI 6592 ZN
10	F01020440	VITE M 8X1,25X25 U5739 8.8 ZN	BOLT M8 X25 5739 8.8 ZN	VIS M8 X25 5739 8.8 ZN	SCHRAUBE M8 X25 5739 8.8 ZN	TORNILLO M8 X25 5739 8.8 ZN
11	G16246382	ASS.TUBO DISCO COREX DRITTO				
12	F01410051	ROS.M8 8,4X 17X1,6 U6592 ZN	PLANE WASHER D.8	RONDELLE D.8	SCHEIBE D.8	ARANDELA D.8
13	F01220022	DADO M 8X1,25 D980 8 ZN	SELF LOCKING NUT M8X1,25 980V	ECROU AUTOBL. M8X1,25 980-V	SELBSTSP.MUTT. M8X1,25 980-V	DADO AUTOBL. M8X1,25 980-V
14	G18904350	MOLLA TENSIONAM.ELEM.CORTO ZN	DRILL COULTER TENS. SPRING	RESSORT TENDEUR SOC	EDER SZSCHARSPANNUNG	UELLE TENSIN SURCADOR
15	G16042500	TIRANTE L.103				
16	F01020436	VITE M 8X1,25X 20 U5739 8.8 ZN	BOLT M 8X20	VIS M 8X20	SCHRAUBE M 8X20	TORNILLO M 8X20
17	G16042510	TIRANTE L.263				
18	F01030054	VITE M 8X1,25X16 U5933 10.9 ZD	BOLT 8X16 UNI5933 10.9 GALVANI	VIS 8X16 UNI 5933 10.9 ZN	SCHRAUBE 8X16 UNI 5933 10.9 ZN	TORNILLO 8X16 UNI 5933 10.9 ZN
19	G16243951	DISCO COREX INOX SP.2,5				
20	F03011144	GUARNIZIONE OR 3 X 56				
21	G16244181	ANELLO DI SOSTEGNO ZAMA				
22	F02050112	ANELLO E. DE 30X 1,5 U7435 C70	SEEGER RING 30X 1,5 U7435 C70	SEEGER E. 30 X 1,5 U7435 C70	SEEGERING E. 30X 1,5 U7435 C70	ANILLO E. 30 X 1,5 U7435 C70
23	F04010174	CUSC.D30 D62 B16 6206 2RS	BEARING 6206 2RS	PALIER 6206 2RS	LAGER 6206 2RS	COJINETE 6206 2RS
24	G16244171	MOZZO COREX ZAMA ZN				
25	F03010074	ANELLO T.A. 32X 47X 7 D3760NBR				
26	F01030112	VITE M12X1,75X45 U5933 10.9 ZD	SCREW M12X1,75X45 U5933 10.9 Z	VIS M12X1,75X45 U5933 10.9 ZG	SCHRAUBE M12X1,75X45 U5933 10.	TORNIL. M12X1,75X45 U5933 10.9
27	G16244050	ASSE COREX ZN	AXLE COREX ZN	AXE COREX ZN	ACHSE COREX ZN	EJE COREX ZN
28	F02100336	PERNO D.10 UNI 1710 ZN	PIN D.10 UNI 1676/DIN 71752	PIVOT D.10 UNI 1676/DIN 71752	BOLZEN D.10 UNI 1676/DIN 71752	PERNO D.10 UNI 1676/DIN 71752
29	F02200342	COPIGLIA R 2X 50 ZN	SPLIT PIN R 2X50 ZN	GOUPILLE R 2X50 ZN	SPLINT R 2X50 ZN	CHAVETA R 2X50 ZN
30	G16244101	BRACCIO RUOTA LIMIT.PROF.				
31	F01220033	DADO M10X 1,5 D980 8 ZN	NUT M10X 1,5 D980 8 ZB	ECRO.M10X 1,5 D980 8 ZB	MUTT.M10X 1,5 D980 8 ZB	TUER.M10X 1,5 D980 8 ZB
32	F01020120	VIT.M10X 1,5X 65 U5737 8.8 ZN	BOLT M 10X65	VIS M 10X65	SCHRAUBE M 10X65	TORNILLO M 10X65
33	G16244070	RUOTA LIMITAT.PROF.COMPL.1"X12	LIMITER DEPTH COUPLYNG	LIMITEUR DE PROFONDEU	TIEFENBEGRENZERKOMPLEX	LIMITADOR DE PROFUNDIDAD
34	F01420061	ROS.M10 10,5X 40X2,5 U6593 ZN	WASHER 11X40X2.5 6593 ZN	RONDELLE 11X40X2,5 6593 ZN	UNTERLEGSCHEIBE 11X40X2,5 6593	ARANDELA 11X40X2,5 6593 ZN
35	G16244121	RUOTA LIMIT.PROF. 1"X12				
36	G16043090	DISCO COREX FE-B SP.2,5	DISC COREX FE-B SP.2,5			
37	G16248432	ASS.TUBO CORTO DISCO COREX				
38	G16246222	ASS.TUBO DISCO COREX ESTERNO				
39	F01420048	ROS.M8 8,4X 24X 2 U6593 ZN	PLANE WASHER D.8	RONDELLE D.8	SCHEIBE D.8	ARANDELA D.8
40	G16248410	FINE CORSA ELEMENTO INTERMEDIO				
41	G16340860	PIATTO TIRO MOLLA CORTO	PLATE SHORT	PLATEAU COURT	TELLER KURZES	PLATO CORTO
42	G16248380	PIASTRA ASOLATA				
43	F01220033	DADO M10X 1,5 D980 8 ZN	NUT M10X 1,5 D980 8 ZB	ECRO.M10X 1,5 D980 8 ZB	MUTT.M10X 1,5 D980 8 ZB	TUER.M10X 1,5 D980 8 ZB
44	F01020512	VITE M12X1,75X35 U5739 8.8 ZN	SCREW M 12X35	VIS M 12X35	SCHRAUBE M 12X35	TORNILLO M 12X35
45	G16246313	ASS.TUBO DISCO COREX INTERMED.				
46	F01020484	VITE M10X 1,5X45 U5739 8.8 ZN	BOLT 10X45 5739 8.G GALVANIZED	VIS 10X45 5739 8.G ZN	SCHRAUBE 10X45 5739 8.G ZN	TORNILLO 10X45 5739 8.G ZN
47	G16248480	DISTANZIALE				
48	G16248390	SUPPORTO ELEMENTO				
49	F01020476	VITE M10X 1,5X30 U5739 8.8 ZN	BOLT M 10X30	VIS M 10X30	SCHRAUBE M 10X30	TORNILLO M 10X30
50	F01230022	DADO M 6X 1 D982 8 ZN	NORM.SELF-LOCKING NUT 6 GALVAN	ECROU AUTOB.NOR.6 ZN	SELBSTSP. MUTTER NOR.6 ZN	TUERCA AUTOB. NOR. 6 ZN
51	F01410037	ROS.M6 6,4X12,5X1,6 U6592 ZN	PLANE WASHER D.6	RONDELLE D.6	SCHEIBE D.6	ARANDELA D.6
52	G16248050	RASCHIATERRA				
53	G16248060	SUPPORTO RASCHIATERRA SX				
54	F01060013	BUL.M 6X 1X 20 U5732 4.6 ZN	BOLT 6X20 5732 4.6 GALVANIZED	VIS 6X20 5732 4.6 ZN	SCHRAUBE 6X20 5732 4.6 ZN	TORNILLO 6X20 5732 4.6 ZN

TAV. 104

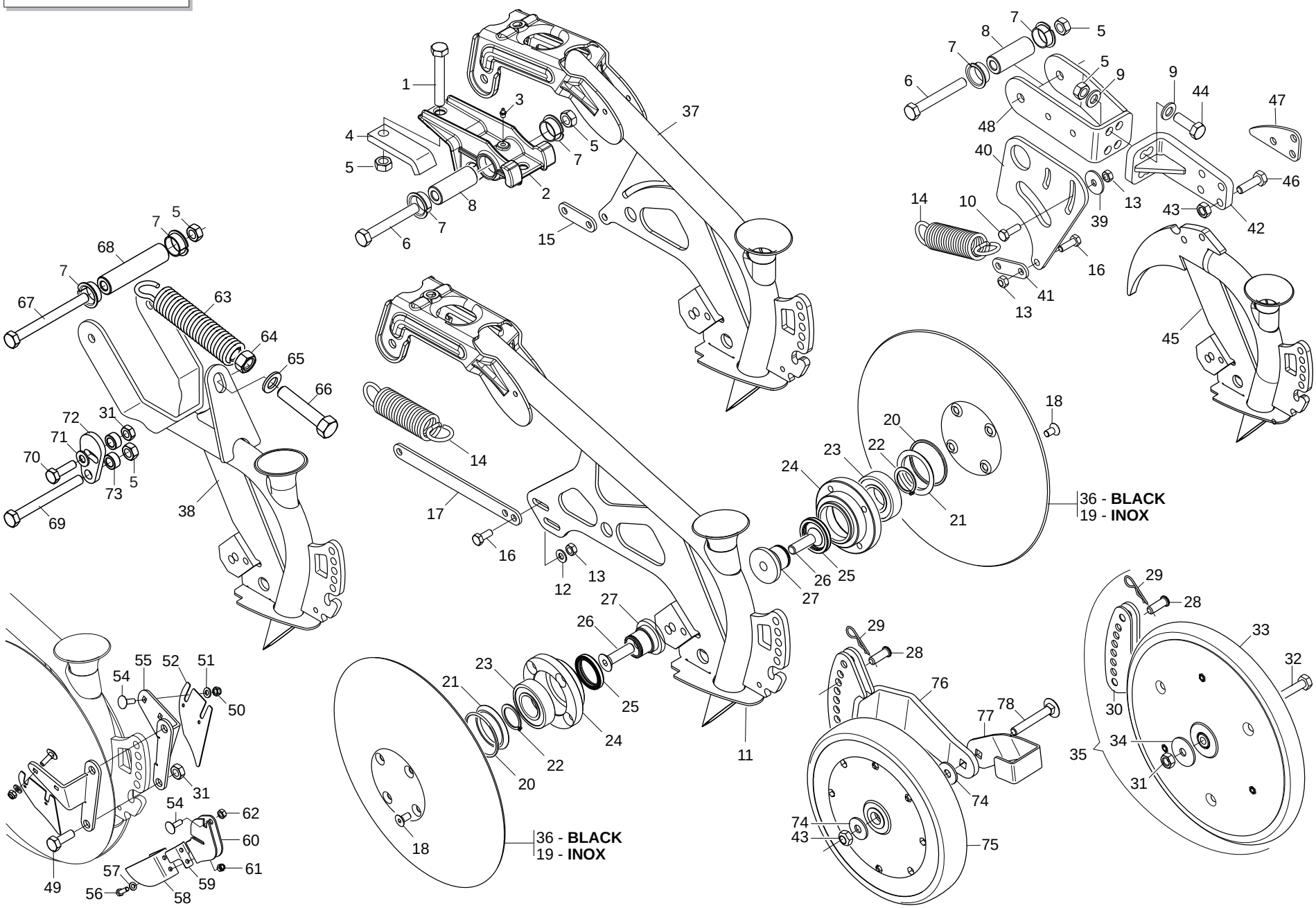

GASPARDO

ASSOLCATORI A DISCHI COREX

TAV. 104

Pos.	Cod.	Descrizione	Description	Description	Benennung	Descripcion
55	G16248070	SUPPORTO RASCHIATERRA DX				
56	F01020378	VITE M5X 0,8X 16 U5739 8.8 ZN	BOLT 5X16 5739 8.G GALVANIZED	VIS 5X16 5739 8.G ZN	SCHRAUBE 5X16 5739 8.G ZN	TORNILLO 5X16 5739 8.G ZN
57	F01410023	ROS.M5 5,3X 10X 1 U6592 ZN	WASHER D5 UNI 6592 ZN	RONDELLE D5 UNI 6592 ZN	UNTERLEGSCHEIBE D5 UNI 6592 ZN	ARANDELA D5 UNI 6592 ZN
58	G16248860	RASCHIATERRA				
59	G16248890	DEFLETTORE RASCHIATERRA INT.				
60	G16248870	SUPPORTO RASCHIATERRA INT.				
61	F01230019	DADO M 5X 0,8 D982 8 ZN	NORM.SELF-LOCKING NUT 5 GALVAN	ECROU AUTOB.NOR.5 ZN	SELBSTSP. MUTTER NOR.5 ZN	TUERCA AUTOB. NOR. 5 ZN
62	F01220011	DADO M 6X 1 D980 8 ZN	SELF LOCKING NUT M6	ECROU AUTOBL. M6	SELBSTSPERR.MUTTER M6	DADO AUTOBL. M6
63	G15226270	MOLLA COMPL.				
64	F01200321	DADO M16X 2 U5588 6.8 ZN	NUT M16X2 U5588 6.8 ZB	ECROU M16X2 U5588 6.8 ZB	MUTTER M16X2 U5588 6.8 ZB	TUERCA M16X2 U5588 6.8 ZB
65	F01410100	ROS.M16 17X 30X 3 U6592 ZN	PLANE WASHER D16 UNI 6592 ZN	RONDELLE D16 UNI 6592 ZN	SCHEIBE D.16 UNI 6592 ZN	ARANDELA D16 UNI 6592 ZN
66	F01020579	VITE M16X 2X80 U5739 8.8 ZN	SCREW 16X80 5739 8.G GALVANIZ.	VIS 16X80 5739 8.G ZN	SCHRAUBE 16X80 5739 8.G ZN	TORNILLO 16X80 5739 8.G ZN
67	F01020176	VITE M12X1,75X130 5737 8.G ZN	BOLT M 12X130	VIS M 12X130	SCHRAUBE M 12X130	TORNILLO M 12X130
68	G18803040	BOCCOLA 12 X25 X105,5				
69	F01020174	VITE M12X1,75X120 5737 8.8 ZN	BOLT 12X120 5737 8.8 GALVANIZ.	VIS 12X120 5737 8.8 ZN	SCHRAUBE 12X120 5737 8.8 ZN	TORNILLO 12X120 5737 8.8 ZN
70	F01020479	VITE M10X 1,5X35 U5739 8.8 ZN	BOLT M 10X35	VIS M 10X35	SCHRAUBE M 10X35	TORNILLO M 10X35
71	F01410064	ROS.M10 10,5X 20X 2 U6592 ZN	WASHER 10,5X21	RONDELLE 10,5X21	SCHEIBE 10,5X21	ARANDELA 10,5X21
72	G16213480	FERMO ELEMENTO ESTERNO ZN				
73	G20980021	BOCCOLA D.12,25X20X10	BUSHING D.12-25X20X10	BOITE D. 12-25X20X10	BsCHSE D.12-25X20X10	CASQUILLO D.12-25X20X10
74	F01420060	ROS.M10 10,5X 30X2,5 U6593 ZN	WASHER 10,5X30	RONDELLE 10,5X30	SCHEIBE 10,5X30	ARANDELA 10,5X30
75	F06120409	RUOTA GOMMA 250X42L PLA.2CUS.>				
76	G16043460	ASS.SUPP.RUOTINO				
77	G16043490	RASCHIATERRA				
78	F01060091					

TAV. 202

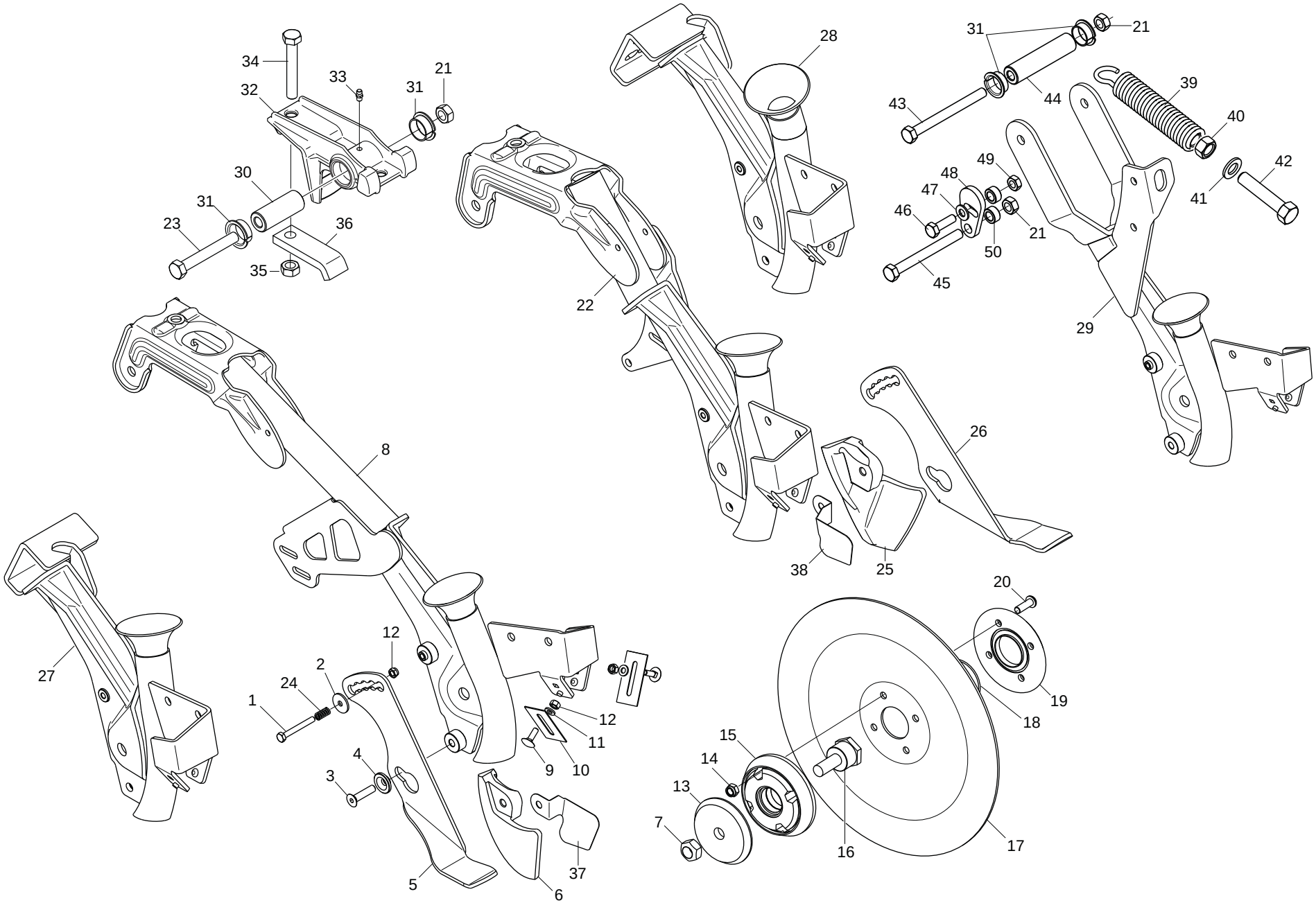

GASPARDO

ASSOLCATORI A SINGOLO DISCO

TAV. 202

Pos.	Cod.	Descrizione	Description	Description	Benennung	Descripcion
1	F01020042	VITE M 6X 1X 50 U5737 8.8 ZN	BOL.M 6X 1X 50 U5737 8.8 ZG	VIS 6 X50 5737 8.G ZN	SCHRAUBE 6 X50 5737 8.G ZN	TORNILLO 6x50 5737 8.G ZN
2	F01420037	ROS.M6 6,4X 24X 2 U6593 ZN				
3	F01030060	VITE M 8X1,25X35 U5933 10.9 ZD	BOLT 8X35 5933 8.8 GALVANIZ.	VIS 8X35 5933 8.8 ZN	SCHRAUBE 8X35 5933 8.8 ZN	TORNILLO 8X35 5933 8.8 ZN
4	G15821110	BOCCOLA SUPPORTO COPRISEME	SEED COVER SUPP. BUSHING	BOITE SUPPORT COUVRE-SEMENCE	BsCHSE SAMENABDECKERHALTER.	CASQUILLO SOPORTE CUBRESEMILLA
5	G16248621	LIMITATORE DI PROFONDITA SX				
6	G19203970	FALCIONE DS DX.				
7	F01220255	DADO M14X 2 D980 8 ZN	NUT- TRISTOP M14	ECROU TRISTOP M14	MUTTER TRISTOP M14	TUERCA TRISTOP M14
8	G16248631	ASS.ELEM.DS LUNGO				
9	F01060013	BUL.M 6X 1X 20 U5732 4.6 ZN	BOLT 6X20 5732 4.6 GALVANIZED	VIS 6X20 5732 4.6 ZN	SCHRAUBE 6X20 5732 4.6 ZN	TORNILLO 6X20 5732 4.6 ZN
10	G16248570	RASCHIATERRA DS				
11	F01410037	ROS.M6 6,4X12,5X1,6 U6592 ZN	PLANE WASHER D.6	RONDELLE D.6	SCHEIBE D.6	ARANDELA D.6
12	F01230022	DADO M 6X 1 D982 8 ZN	NORM.SELF-LOCKING NUT 6 GALVAN	ECROU AUTOB.NOR.6 ZN	SELBSTSP. MUTTER NOR.6 ZN	TUERCA AUTOB. NOR. 6 ZN
13	G16040863	PARAPOLVERE DI BLOCCAGGIO ZAMA	ZAMA LOCK DUST SEAL	PARE-POUSSI+RE DE BLOCAGE ZAMA	FESTSTELL-STAUBABDECKUNG ZAMA	GUARDAPOLVO DE BLOQUEO ZAMAK
14	F01230034	DADO M 8X1,25 D982 8	SELF LOCKING NUT M8X1,25	ECROU AUTOBL. M8X1,25	SELBSTSP.MUTT. M8X1,25	DADO AUTOBL. M8X1,25
15	G16040921	FLANGIA CON CUSCINETTI	FLANGE w/ BEARING	BRIDE AVEC ROULEMENTS	FLANSCHE MIT LAGERN	BRIDA CON COJINETES
16	G16040820	ASSE DISCO	DISK SPINDLE	AXE DISQUE	SCHEIBENACHSE	EJE DISCO
17	G16241560	DISCO D.320 DS	TOOTHED DISK D.320 DS	DISQUE D.320 DS	SCHEIBE D.320 DS	DISCO D.320 DS
18	F03010576	ANELLO OR 50,52X1,78 NBR	GASKET OR 033 DOWTY	BAGUE OR 033 DOWTY	RING OR 033 DOWTY	ANILLO OR 033 DOWTY
19	G19003411	DISCO ESTERNO	OUTER DISK	DISQUE EXTERNE	AUSSENSCHEIBE	DISCO EXTERNO
20	F01040501	VITE M8X X 25 D7984 8.8 ZN	BOLT 8X25 DIN 7984 GALVANIZED	VIS 8X25 DIN 7984 ZN	SCHRAUBE 8X25 DIN 7984 ZN	TORNILLO 8X25 DIN 7984 ZN
21	F01220048	DADO M12X1,75 D980 8 ZN	SELF LOCKING NUT M12X1,75 980V	ECROU AUTOBL. M12X1,75 980-V	SIEHE 00553312	DADO AUTOBL. M12X1,75 980-V
22	G16248681	ASS.ELEM.DS CORTO				
23	F01020168	VITE M12X1,75X90 U5737 8.8 ZN	BOLT 12X90 5737 8.G GALVANIZED	VIS 12X90 5737 8.G ZN	SCHRAUBE 12X90 5737 8.G ZN	TORNILLO 12X90 5737 8.G ZN
24	G18904240	MOLLA APERTURA PORTA CONTROLLO	SPRING	RESSORT	FEDER	MUELLE
25	G19203980	FALCIONE DS SX.				
26	G16248781	LIMITATORE DI PROFONDITA DX				
27	G16248561	ASS.ELEM.DS INTERMEDIO SX				
28	G16248801	ASS.ELEM.DS INTERMEDIO DX				
29	G16248741	ASS.ELEM.DS ESTERNO				
30	G18802740	BOCCOLA 25X12X63,5	BUSHING 25X12X63,5	BOITE 25X12X63,5	BUCHSE 25X12X63,5	CASQUILLO 25X12X63,5
31	F04150034	CUSCINETTO FLANGIATO 25X28X16				
32	G16340801	SUPPORTO SCARPETTA				
33	F01100011	ING.M 6X1 7663-A 9SMNPB28 ZN	SPHERE NIPPLE M6X1/A	GRAISSEUR A BILLES M6X1/A	KUGELFETTBsCHSE M6X1/A	ENGRAS. DE ESFERAS M6X1/A
34	F01020166	VITE M12X1,75X80 U5737 8.8 ZN	BOLT 12X80 5737 8.G GALVANIZED	VIS 12X80 5737 8.G ZN	SCHRAUBE 12X80 5737 8.G ZN	TORNILLO 12X80 5737 8.G ZN
35	F01220048	DADO M12X1,75 D980 8 ZN	SELF LOCKING NUT M12X1,75 980V	ECROU AUTOBL. M12X1,75 980-V	SIEHE 00553312	DADO AUTOBL. M12X1,75 980-V
36	G16340810	SCONTRO DI FISSAGGIO	FIXING STRIKER PLATE	BUTEE DE FIXATION	BEFESTIGUNGSANSCHLAG	ELEM. DE EMPALME DE SUJECION
37	G16249040	SUPPORTO LAMELLA DS DX IX				
38	G16249050	SUPPORTO LAMELLA DS SX IX				
39	G15226270	MOLLA COMPL.				
40	F01200321	DADO M16X 2 U5588 6.8 ZN	NUT M16X2 U5588 6.8 ZB	ECROU M16X2 U5588 6.8 ZB	MUTTER M16X2 U5588 6.8 ZB	TUERCA M16X2 U5588 6.8 ZB
41	F01410100	ROS.M16 17X 30X 3 U6592 ZN	PLANE WASHER D16 UNI 6592 ZN	RONDELLE D16 UNI 6592 ZN	SCHEIBE D.16 UNI 6592 ZN	ARANDELA D16 UNI 6592 ZN
42	F01020579	VITE M16X 2X80 U5739 8.8 ZN	SCREW 16X80 5739 8.G GALVANIZ.	VIS 16X80 5739 8.G ZN	SCHRAUBE 16X80 5739 8.G ZN	TORNILLO 16X80 5739 8.G ZN
43	F01020176	VITE M12X1,75X130 5737 8.G ZN	BOLT M 12X130	VIS M 12X130	SCHRAUBE M 12X130	TORNILLO M 12X130
44	G18803040	BOCCOLA 12 X25 X105,5				
45	F01020174	VITE M12X1,75X120 5737 8.8 ZN	BOLT 12X120 5737 8.8 GALVANIZ.	VIS 12X120 5737 8.8 ZN	SCHRAUBE 12X120 5737 8.8 ZN	TORNILLO 12X120 5737 8.8 ZN
46	F01020479	VITE M10X 1,5X35 U5739 8.8 ZN	BOLT M 10X35	VIS M 10X35	SCHRAUBE M 10X35	TORNILLO M 10X35
47	F01410064	ROS.M10 10,5X 20X 2 U6592 ZN	WASHER 10,5X21	RONDELLE 10,5X21	SCHEIBE 10,5X21	ARANDELA 10,5X21
48	G16213480	FERMO ELEMENTO ESTERNO ZN				
49	F01220033	DADO M10X 1,5 D980 8 ZN	NUT M10X 1,5 D980 8 ZB	ECRO.M10X 1,5 D980 8 ZB	MUTT.M10X 1,5 D980 8 ZB	TUER.M10X 1,5 D980 8 ZB
50	G20980021	BOCCOLA D.12,25X20X10	BUSHING D.12-25X20X10	BOITE D. 12-25X20X10	BsCHSE D.12-25X20X10	CASQUILLO D.12-25X20X10

TAV. 112

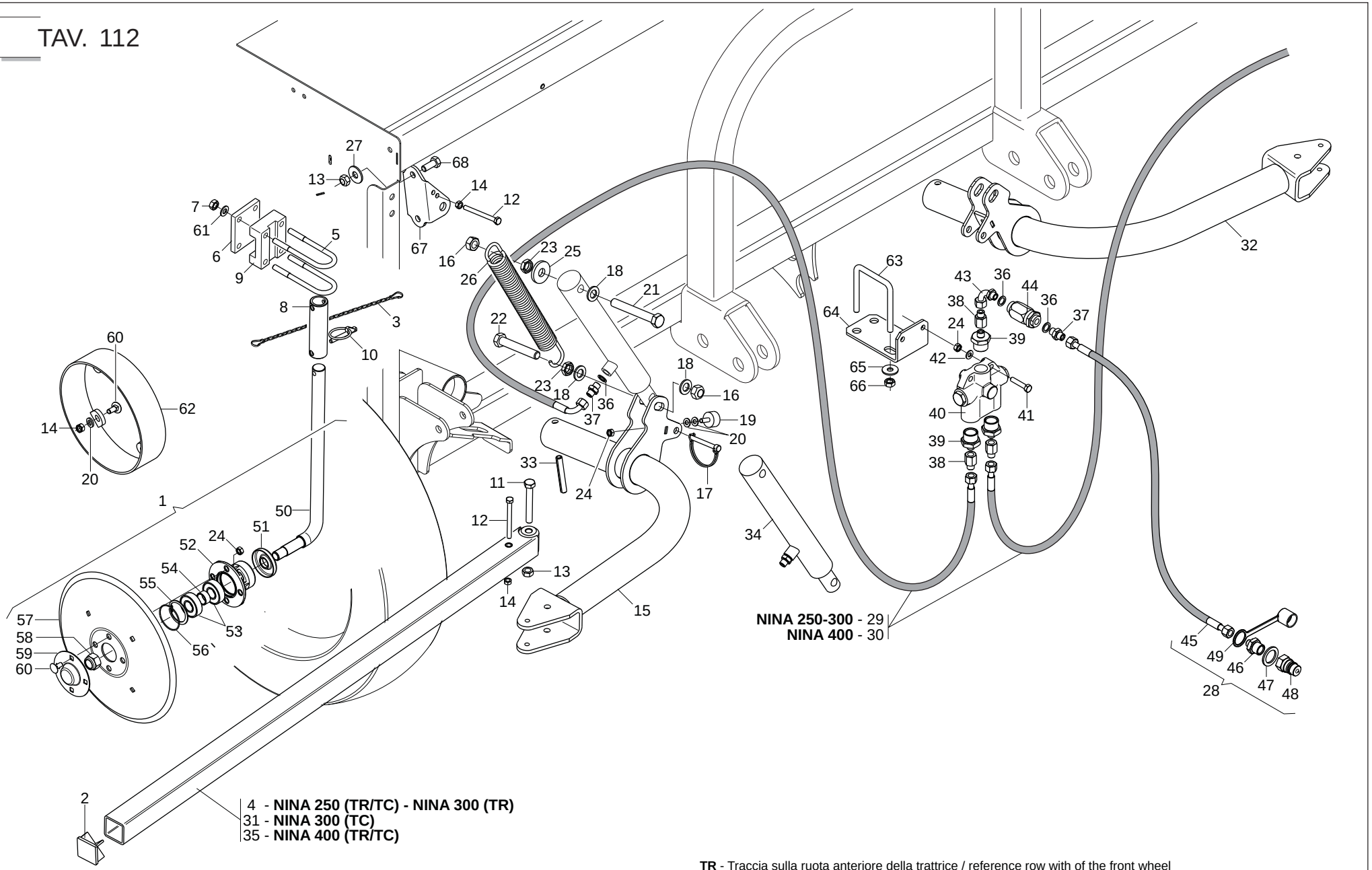

TR - Traccia sulla ruota anteriore della trattrice / reference row with of the front wheel
TC - Traccia al centro della trattrice / reference row with centre of the tractor

SEGNAFILE

TAV. 112

Pos.	Cod.	Descrizione	Description	Description	Benennung	Descripcion
1	G17111481	DISCO D.320 COMPL.MAGICA	COMPLETE MAGICA D.320 DISK	DISQUE D.320 COMPL. MAGIQUE	SCHEIBED.320 KOMPL. MAGICA	DISCO D.320 COMPL. MAGICO
2	G11410370	TAPPO PER TUBO 50X50X3 *	PLUG PIPE 50X50X3	BOUCHON TUBE 50X50X3	ROHRPFROPFEN 50X50X3	TAPN TUBO 50X50X3 D
3	G22270463	TUB.TR.1/4R2 F-F 1/4 L1500 LM	TUBE TR.1/4R2 F-F1/4 L1500 LM	TUB.TR.1/4R2 F-F 1/4 L1500 LM	ROHR1/4R2 F-F 1/4 L1500 LM	TUB.TR.1/4R2 F-F 1/4 L1500 LM
4	G16913390	BRACCIO SEGNAFILE 350	ROW MARKER ARM 350	BRAS TRACEUR 350	REIHENANREISSARM 350	BRAZO MARCADOR DE FILAS 350
5	F20110860	CAV.T.M10X 1,5X 30 46X128,5ZN	U BOLT M10X46 ZN	CAVALIER M10X46 ZN	VERBINDUNG M10X46 ZN	PERNO EN U M10X46 ZN
6	G17111330	SCONTRO 90X70 -10 4F11 66X46	STOP TEETH 90X70 -10 4F11 66X4	BUT+E 90X70 -10 4TROUS 11 66X4	ANSCHLAG 90X70 -10 4F11 66X46	DIENTE DE PARADA 90X70 -10 4F1
7	F01200270	DADO M10X 1,5 U5588 6.8 ZN	NUT M10	ECROU M10	MUTTER M10	DADO M10
8	G17111290	MANICOTTO DISCO	DISC COUPLING SLEEVE	MANCHON DISQUE	SCHEIBENMUFFE	MANGUITO DISCO
9	G19204230	SUPPORTO MANICOTTO TQ.50				
10	F02200507	SPINA SCATTO D. 9 B/83 ZN	SNAP PIN D 9 B/83	FICHE A DETENTE D 9 B/83	EINRASTSTIFT D 9 B/83	CLAVIJA DE MUELLE D 9 B/83
11	F01020168	VITE M12X1,75X90 U5737 8.8 ZN	BOLT 12X90 5737 8.G GALVANIZED	VIS 12X90 5737 8.G ZN	SCHRAUBE 12X90 5737 8.G ZN	TORNILLO 12X90 5737 8.G ZN
12	F01020088	VITE M 8X1,25X90 U5737 8.8 ZN	BOLT 8 X90 5737 8.G GALVANIZED	VIS 8 X90 5737 8.G ZN	SCHRAUBE 8 X90 5737 8.G ZN	TORNILLO 8 X90 5737 8.G ZN
13	F01220048	DADO M12X1,75 D980 8 ZN	SELF LOCKING NUT M12X1,75 980V	ECROU AUTOBL. M12X1,75 980-V	SIEHE 00553312	DADO AUTOBL. M12X1,75 980-V
14	F01220022	DADO M 8X1,25 D980 8 ZN	SELF LOCKING NUT M8X1,25 980V	ECROU AUTOBL. M8X1,25 980-V	SELBSTSP.MUTT. M8X1,25 980-V	DADO AUTOBL. M8X1,25 980-V
15	G16213910	BRACCIO SEGNAFILE DX				
16	F01220266	DADO M16X 2 D980 8 ZN	NUT M16X 2 D980 8 ZG	ECR. M16X 2 D980 8 ZG	MUT. M16X 2 D980 8 ZG	TUER.M16X 2 D980 8 ZG
17	F02200562	SPINA SICUR. D. 8X70 ZN	SPLIT PIN D.8X70 ZB	GOUPILLE D.8X70 ZB	BOLZEN D.8X70 ZB	PERNO D.8X70 ZB
18	F01410100	ROS.M16 17X 30X 3 U6592 ZN	PLANE WASHER D16 UNI 6592 ZN	RONDELLE D16 UNI 6592 ZN	SCHEIBE D.16 UNI 6592 ZN	ARANDELA D16 UNI 6592 ZN
19	F05150456	PARACOLPI 30X15 M8X25	BUFFER 30X17 M8X21	PARE-CHOCS 30X17 M8X21	STOSSDZMPFER 30X17 M8X21	PARAGOLPES 30X17 M8X21
20	F01410051	ROS.M8 8,4X 17X1,6 U6592 ZN	PLANE WASHER D.8	RONDELLE D.8	SCHEIBE D.8	ARANDELA D.8
21	F01020266	VITE M16X 2X120 U5737 8.8 ZN	BOLT 16X120 5737 8.8 GALVANIZ	VIS 16X120 5737 8.8 ZN	SCHRAUBE 16X120 5737 8.8 ZN	TORNILLO 16X120 5737 8.8 ZN
22	F01020580	VITE M16X 2X100 U5739 8.8 ZN				
23	F01200444	DADO M16X 2 U5589 6S ZN	NUT M16X2	ECROU M16X2	MUTTER M16X2	DADO M16X2
24	F01200244	DADO M 8X1,25 U5588 6.8 ZN	NUT M8	ECROU M8	MUTTER M8	DADO M8
25	G18700450	RONDELLA 17 X45 X6 ZN	WASHER 17X45X6 ZB	RONDELLE 17X45X6 ZB	SCHEIBE 17X45X6 ZB	ARANDELA 17X45X6 ZB
26	G16214150	MOLLA SEGNAFILE				
27	F01410076	ROS.M12 13X 24X2,5 U6592 ZN	PLANE WASHER D12 UNI 6592 ZN	RONDELLE D12 UNI 6592 ZN	SCHEIBE D12 UNI 6592 ZN	ARANDELA D12 UNI 6592 ZN
28	G13811211	TUBO X COLLEG. AL TRATTORE	PIPE FOR CONNECTION TO TRACTOR	TUBE POUR CONN. AU TRACTEUR	ROHR F. KUPPLUNG AM SCHLEPPER	TUBO P/CONEXIN AL TRACTOR T
29	G15210541	TUBO 1/4R2 CF1/4- F1/4 2100				
30	G15210553	TUBO 1/4R2 CF45 1/4-F 1/4 2750				
31	G16072220	BRACCIO SEGNAFILE	ROW MARKER BEAM	BRAS TRACEUR	REIHENANREISSARM	BRAZO MARCADOR DE FILAS
32	G16213800	BRACCIO SEGNAFILE SX				
33	F02100181	SPINA E.P. 12X 80 U6873 C70 BR	PIN EL. 12X80 DIN 1481	FICHE EL. 12X80 DIN 1481	SPANNSTIFT 12X80 DIN 1481	CLAVIJA EL.12X80 DIN 1481
34	G16214000	CILINDRO SE 30X40 -220				
35	G16213991	BRACCIO SEGNAFILE 400 TC				
36	F01500012	RONDELLA IN RAME 1/4"	WASHER	RONDELLE	SCHEIBE	ARANDELA
37	F03150266	NIPPLO MM CIL-CIL 1/4-1/4 ZN	NIPPLE GALV.CYL.MALE 1/4 ZN	NIPPLE MALE CYL. 1/4 ZN	NIPPELZYL.1/4 ZN	NIPLE MACHO CIL.1/4 ZN
38	F03151194	PROLUNGA CORTA 036 1/4	SHORT EXTENSION 036 1/4	RALLONGE COURTE 036 1/4	KURZE VERLZNGERUNG 036 1/4	PROLONG. CORTA 036 1/4
39	F03150122	NIPPLO MM 3/4 JIC OR 1/4 OR ZG	NIPPLE- 3/4 JIC OR - 1/4	NIPPLE 3/4 JIC OR - 1/4	NIPPEL 3/4 JIC OR - 1/4	NIPLE 3/4 JIC OR - 1/4
40	F03150577	VALVOLA SEGNAF.CROSS SQV	ROW MARKER VALVE ATI C128513			
41	F01020068	VITE M 8X1,25X40 U5737 8.8 ZN	BOLT M8X1,25X40 U5737 8.8 ZB	VIS M 8X1,25X40 U5737 8.8 ZN	SCHRAUBE M8X1,25X40 U5737 8.8	TORNILLO M8X1,25X40 U5737 8.8
42	F01410051	ROS.M8 8,4X 17X1,6 U6592 ZN	PLANE WASHER D.8	RONDELLE D.8	SCHEIBE D.8	ARANDELA D.8
43	F03150859	CURVA 90°F.GIREV.1/4 - M.1/4	ELBOW 90[F. SWIVEL 1/4 -M.1/4	COUDE 90[F.TOURN.1/4 - M.1/4	KNIESTsCK 90[F.DREHB.1/4 - M.	CURVA 90 F.GIRAT..1/4 - M.1/4C
44	F03151226	REGOL.DI FLUSSO VRF 1/4' GAS	1/4' GAS VALVE VRF	SOUPAPE REG DEBIT VRF 1/4" GAZ	VENITL VRF 1/4' GAS	VæLVULA VRF 1/4' GAS
45	G22270463	TUB.TR.1/4R2 F-F 1/4 L1500 LM	TUBE TR.1/4R2 F-F1/4 L1500 LM	TUB.TR.1/4R2 F-F 1/4 L1500 LM	ROHR1/4R2 F-F 1/4 L1500 LM	TUB.TR.1/4R2 F-F 1/4 L1500 LM
46	F03150211	NIPPLO MM CIL-CIL 1/2-1/4 ZN	NIPLE 1/4-1/2	NIPLE 1/4-1/2	NIPLE 1/4-1/2	NIPLE 1/4-1/2
47	F03151237	ROS. 21 X27X1,5 RAME -1/2"	1/2 COPPER WASHER	RONDELLE CUIVRE 1/2	UNTERLEGSCHEIBE KUPFER 1/2	ARANDELA COBRE 1/2
48	F03150935	INNESTO RAP.MASCH.1/2 A VALV.	QUICK CONNECT MALE CONE 1/2 CO	CONNEXION RAPIDE MALE CONE 1/2	SCHNELLKUPPLUNG GEWINDE KONISC	ACOPLAMIENTO RAPIDO MACHO CONO
49	F05150325	CAPPUC.F X INN.M RAP.1/2 ROSSO	COVER 1/2	COUVERCLE 1/2	DECKEL 1/2	TAPA 1/2
50	G17111490	PERNO REGGIDISCO SEGN.MAGICA				
51	G16610430	FONDELLO ZN.				
52	G16610160	SUPP.CUSCINETTI DISCO SEGN.ZN.	GALVAN. ROWMAKER DISK BEARING	SUPPORT ROULEMENTS DISQUE TRAC	SCHEIBENLAGERHALTERUNG	SOPORTE COJINETE DE DISCO MARC
53	F04010156	CUSC.d20 D47 B14 6204 2RSH				
54	G18801270	BOCCOLA 21 X25 X12 ZN	BUSHING 21 X 25 X 12 ZN	BOITE 21 X25 X12 ZN	BsCHSE 21 X25 X12 ZN	CASQUILLO 21 X25 X12 ZN
55	F02050370	ANELLO E. DI 47X1,75 U7437 C70	SEEGER RING 47X 1,75 U7437 C70	SEEGER E. 47X 1,75 U7437 C70	SEEGERING E. 47X1,75 U7437 C70	ANILLO E. 47X 1,75 U7437 C70

TAV. 112

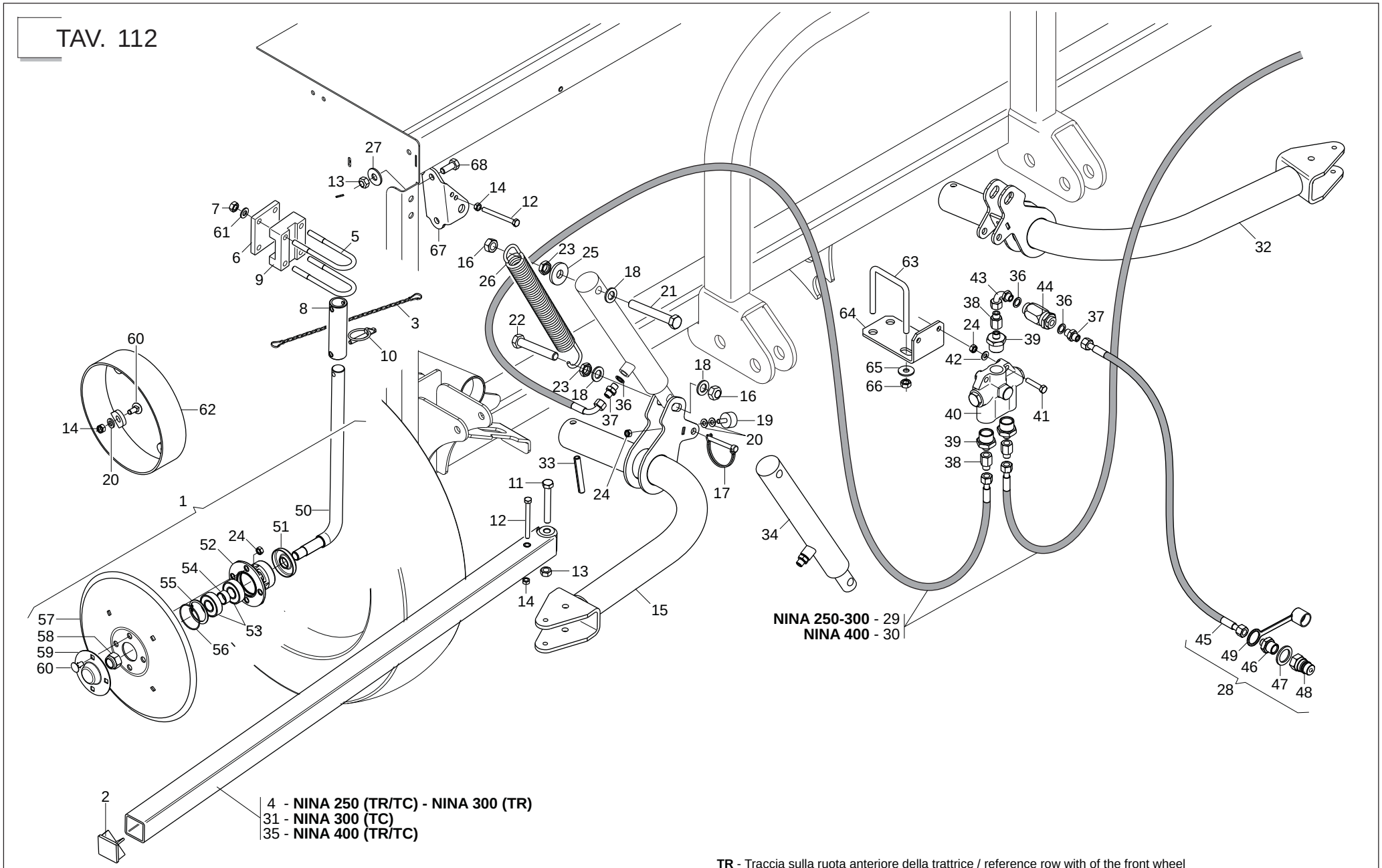

TR - Traccia sulla ruota anteriore della trattrice / reference row with of the front wheel
TC - Traccia al centro della trattrice / reference row with centre of the tractor

SEGNAFILE

TAV. 112

Pos.	Cod.	Descrizione	Description	Description	Benennung	Descripcion
56	F03010576	ANELLO OR 50,52X1,78 NBR	GASKET OR 033 DOWTY	BAGUE OR 033 DOWTY	RING OR 033 DOWTY	ANILLO OR 033 DOWTY
57	G16610170	DISCO SEGNAFILE D.320	ROW MARKER DISK D.320	DISQUE TRACEUR D320	SPURREISSERSCHEIBE D. 320	DISCO MARCARDOR DE FILAS O 320
58	F01230098	DADO M18X 2,5 D982 8 ZN	NUT M18X 2,5 D982 8 ZB	ECRO.M18X 2,5 D982 8 ZB	MUTT.M18X 2,5 D982 8 ZB	TUER.M18X 2,5 D982 8 ZB
59	G16610190	CHIUSURA CUSCINETTO ZN	GALVAN. BEARING CLOSURE	FERMETURE ROULEMENT ZN	LAGERVERSCHLUSS ZN	CIERRE COJINETE ZN
60	F01060040	BUL.M 8X1,25X 20 U5732 4.6 ZG	BOLT 8 X20 5732 4.6 GALVANIZED	VIS 8 X20 5732 4.6 ZN	SCHRAUBE 8 X20 5732 4.6 ZN	TORNILLO 8 X20 5732 4.6 ZN
61	F01410064	ROS.M10 10,5X 20X 2 U6592 ZN	WASHER 10,5X21	RONDELLE 10,5X21	SCHEIBE 10,5X21	ARANDELA 10,5X21
62	G16610210	ASS.LIMITATORE PROFONDITA'	LIMITER DEPTH COUPLYNG	GR. ASS. LIMITEUR DE PROFONDEU	TIEFENBEGRENZERKOMPLEX	CONJ. LIMITADOR DE PROFUNDIDAD
63	F20110770	CAV.Q.M14X 2X 50 96X119 ZN	U-BOLT M14X96 - 119 ZN	CAVALIER M14X96 - 119 ZN	VERBINDUNG M14X96 - 119 ZN	PERNO EN U M14X96 - 119 ZN
64	G15412350	SUPPORTO VALVOLA SEGNAFILE	ROWMARKER VALVE SUPPORT	SUPPORT SOUPAPE TRACEUR	VENTILHALTERUNG SPURREISSER	SOPORTE VæLVULA MARC. DE FILAS
65	G18700690	RONDELLA 15 X40 X6 ZN	WASHER 15 X 40 X 6 ZN	RONDELLE 15 X40 X6 ZN	UNTERLEGSCHEIBE 15 X40 X6 ZN	ARANDELA 15 X40 X6 ZN
66	F01200306	DADO M14X 2 U5588 6.8 ZN	NUT M14X2	ECROU M14X2	MUTTER M14X2	DADO M14X2
67	G16213941	SUPPORTO SEGNAFILE				
68	F01020510	VITE M12X1,75X30 U5739 8.8 ZN	BOLT M 12X30	VIS M 12X30	SCHRAUBE M 12X30	TORNILLO M 12X30

TAV. 121

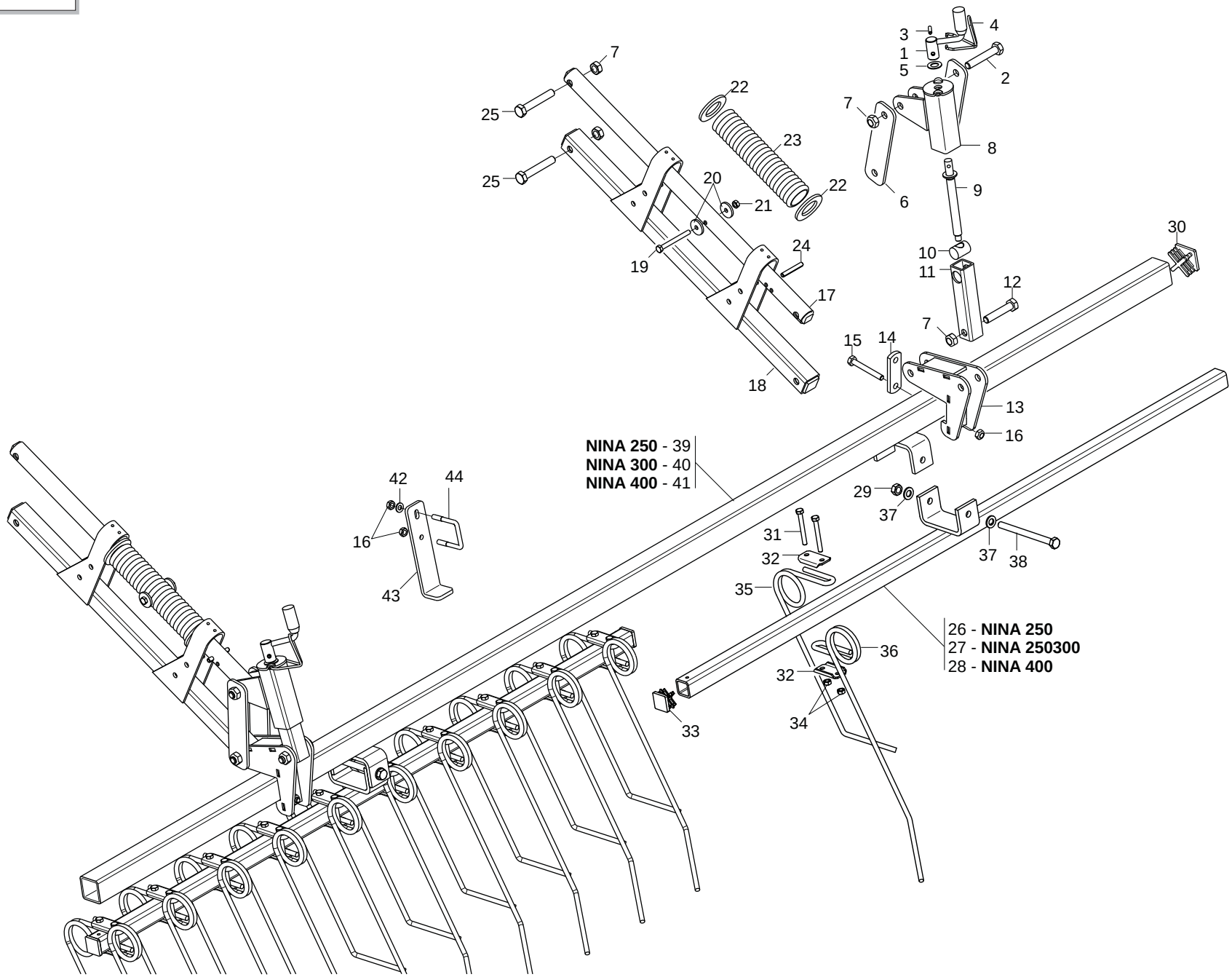

GASPARDO

ERPICE COPRISEME MULTI CONTROL

TAV. 121

Pos.	Cod.	Descrizione	Description	Description	Benennung	Descripcion
1	G22270235	MANIGLIA REGOLAZIONE B4	ADJUSTMENT HANDLE B4	POIGNEE REGLAGE B4	EINSTELLGRIFF B4	MANIJA REGULACIN B4 M
2	F01020210	VITE M14X 2X 80 U5737 8.8 ZN	BOLT M14X 2X 80 U5737 8.8 ZG	VIS M14X 2X 80 U5737 8.8 ZG	SCHRAUBE M14X 2X 80 U5737 8.8	TORNILLO M14X 2X 80 U5737 8.8
3	F02100109	SPINA E.P. 6X 24 U6873 C70 BR	PIN EL. .6 X24 DIN 1481	FICHE EL. 6 X24 DIN 1481	SPANNSTIFT 6 X24 DIN 1481	CLAVIJA EL.6 X24 DIN 1481
4	G65336100	MOLLA SPEC.FERMO MANIGLIA SP	SPEC SPRING HANDLE STOP SP	RESSORT SPEC. ARRET POIGNEE SP	SPEZIALFEDER GRIFFSPERRE SP	MUELLE ESPEC. BLOQUEO MANIJA S
5	G20970149	RONDELLA D.15X28X1,5	WASHER D.15X28X1-5	RONDELLE D. 15X28X1-5	UNTERLEGSCHEIBE D.15X28X1-5	ARANDELA D.15X28X1-5
6	G16243470	SCONTRO 200X50 -6 2F14 155	STRIKER 200X50 -6 2F14 155	BUTEE 200X50 -6 2F14 155	ANSCHLAG 200X50 -6 2F14 155	ELEMENTO DE EMPALME 200X50 -6
7	F01220255	DADO M14X 2 D980 8 ZN	NUT- TRISTOP M14	ECROU TRISTOP M14	MUTTER TRISTOP M14	TUERCA TRISTOP M14
8	G16243580	TUBO REGOLAZIONE	ADJUSTMENT TUBE	TUBE REGLAGE	ROHR EINSTELLUNG	TUBO REGULACION
9	G22505058	VITE DI REGOLAZIONE POSTERIORE	REAR ADJUSTMENT BOLT	VIS DE REGLAGE ARRIERE	HINTERE EINSTELLSCHRAUBE	TORNILLO DE REGULACIN TRASEROS
10	G22230063	ELEMENTO ARTICOLATO	ARTICULATED ELEMENT	ELEMENT ARTICULE	GELENKELEMENT	ELEMENTO ARTICULADO
11	G16243530	TUBO INTERNO DI REGOLAZIONE	INTERNAL PIPE	TUBE INT.	INNENROHR	TUBO INTERIOR
12	F01020207	VIT. M14X 2X 70 U5737 8.8 ZN	BOLT M 14X70	VIS M 14X70	SCHRAUBE M 14X70	TORNILLO M 14X70
13	G16243491	SUPPORTO ERPICE				
14	G20890017	SCONTRO	STRIKER PLATE	BUTEE	ANSCHLAG	ELEMENTO DE EMPALME
15	F01020128	VITE M10X 1,5X80 U5737 8.8 ZN				
16	F01220033	DADO M10X 1,5 D980 8 ZN	NUT M10X 1,5 D980 8 ZB	ECRO.M10X 1,5 D980 8 ZB	MUTT.M10X 1,5 D980 8 ZB	TUER.M10X 1,5 D980 8 ZB
17	G16041760	TUBO SUP.ERPICE	PIPE SUPPORT	TUBE SUPPORT	ALTERUNGSROHR	TUBO SOPORTE
18	G16243441	TUBO INFERIORE ERPICE				
19	F01020086	VITE M 8X1,25X80 U5737 8.8 ZN	BOLT M8X1X80	VIS M8X1X80	SCHRAUBE M8X1X80	TORNILLO M8X1X80
20	G20970032	RONDELLA 32X4X8,5	WASHER 32X4X8-5	RONDELLE 32X4X8-5	UNTERLEGSCHEIBE 32X4X8-5	ARANDELA 32X4X8-5
21	F01220022	DADO M 8X1,25 D980 8 ZN	SELF LOCKING NUT M8X1,25 980V	ECROU AUTOBL. M8X1,25 980-V	SELBSTSP.MUTT. M8X1,25 980-V	DADO AUTOBL. M8X1,25 980-V
22	F01420118	ROS.M36 39X 66X 5 U6593 ZN	WASHER 39X66X5 6593	RONDELLE 39X66X5 6593	UNTERLEGSCHEIBE 39X66X5 6593	ARANDELA 39X66X5 6593
23	G18903560	MOLLA COMPRESSIONE ERPICE	SPRING.	RESSORT COMPL.	DRUCKFEDER	MUELLE COMP.
24	F02100146	SPINA E.P. 8X 55 U6873 C70 BR	PIN EL. .8 X55 DIN 1481	FICHE EL.8 X55 DIN 1481	SPANNSTIFT 8 X55 DIN 1481	CLAVIJA EL.8 X55 DIN 1481
25	F01020212	VITE M14X 2X 90 U5737 8.8 ZN	BOLT M14X 2X 90 U5737 8.8 ZB	VIS M14X 2X 90 U5737 8.8 ZB	SCHARUBE M14X2X 90 U5737 8.8ZB	TORNILLO M14X 2X 90 U5737 8.8
26	G16240400	TUBO INFERIORE ERPICE	LOWER HARROW TUBE	TUBE INFERIEUR HERSE	UNTERES ROHR EGGE	TUBO INFERIOR GRADA
27	G16240430	TUBO INFERIORE ERPICE	LOWER HARROW TUBE	TUBE INFERIEUR HERSE	UNTERES ROHR EGGE	TUBO INFERIOR GRADA
28	G16240840	TUBO INF.ERPICE M400				
29	F01220048	DADO M12X1,75 D980 8 ZN	SELF LOCKING NUT M12X1,75 980V	ECROU AUTOBL. M12X1,75 980-V	SIEHE 00553312	DADO AUTOBL. M12X1,75 980-V
30	F20120349	PUNTALE Q.50 ALETT.POLIT.NERO				
31	F01020083	VITE M 8X1,25X70 U5737 8.8 ZN	BOLT M 8X70	VIS M 8X70	SCHRAUBE M 8X70	TORNILLO M 8X70
32	G07000026	PIASTR.DENTI A MOLLA ZN	GALVAN. SPRING TOOTHED PLATE	PLAQUE DENTS A RESSORT ZN	PLATTE FEDERZZHNE ZN	PLACA DIENTES DE MUELLE ZN
33	F20120346	PUNTALE Q 35 ALETT.POLIT.NERO				
34	F01220022	DADO M 8X1,25 D980 8 ZN	SELF LOCKING NUT M8X1,25 980V	ECROU AUTOBL. M8X1,25 980-V	SELBSTSP.MUTT. M8X1,25 980-V	DADO AUTOBL. M8X1,25 980-V
35	G18903640	MOLLA CORTA COPRISEME D.9	SPEC. SPRING SHORT TOOTH D.9	DENT HERSE RECOUVR COURTE D.9	SPEZIALFEDER M. KURZ.ZAHN D.9	MUELLE ESPEC.DIENTE CORTO D.9
36	G18903650	MOLLA LUNGA COPRISEME D.9	SPEC. SPRING LONG TOOTH D.9	DENT HERSE RECOUVR LONGUE D.9	SPEZIALFEDER M. LANG.ZAHN D.9	MUELLE ESPEC.DIENTE LARGO D.9
37	F01410076	ROS.M12 13X 24X2,5 U6592 ZN	PLANE WASHER D12 UNI 6592 ZN	RONDELLE D12 UNI 6592 ZN	SCHEIBE D12 UNI 6592 ZN	ARANDELA D12 UNI 6592 ZN
38	F01020179	VITE M12X1,75X150 5737 8.8 ZN	BOLT 12X150 5737 8.G GALVANIZ.	VIS 12X150 5737 8.G ZN	SCHRAUBE 12X150 5737 8.G ZN	TORNILLO 12X150 5737 8.G ZN
39	G16243680	TUBO SUPPORTO ERPICE				
40	G16243560	TUBO SUPPORTO ERPICE	HARROW SUPPORT TUBE	TUBE SUP.HERSE	ROHR EGGENHALTERUNG	TUBO SOP.GARDA
41	G16243710	TUBO SUPPORTO ERPICE	HARROW SUPPORT TUBE	TUBE SUP.HERSE	ROHR EGGENHALTERUNG	TUBO SOP.GARDA
42	F01420060	ROS.M10 10,5X 30X2,5 U6593 ZN	WASHER 10,5X30	RONDELLE 10,5X30	SCHEIBE 10,5X30	ARANDELA 10,5X30
43	G16073100	GUIDA BRACCIO OSCILLANTE				
44	F20110715	CAV.Q.M10X 1,5X 30 61X 80 ZN				

TAV. 211

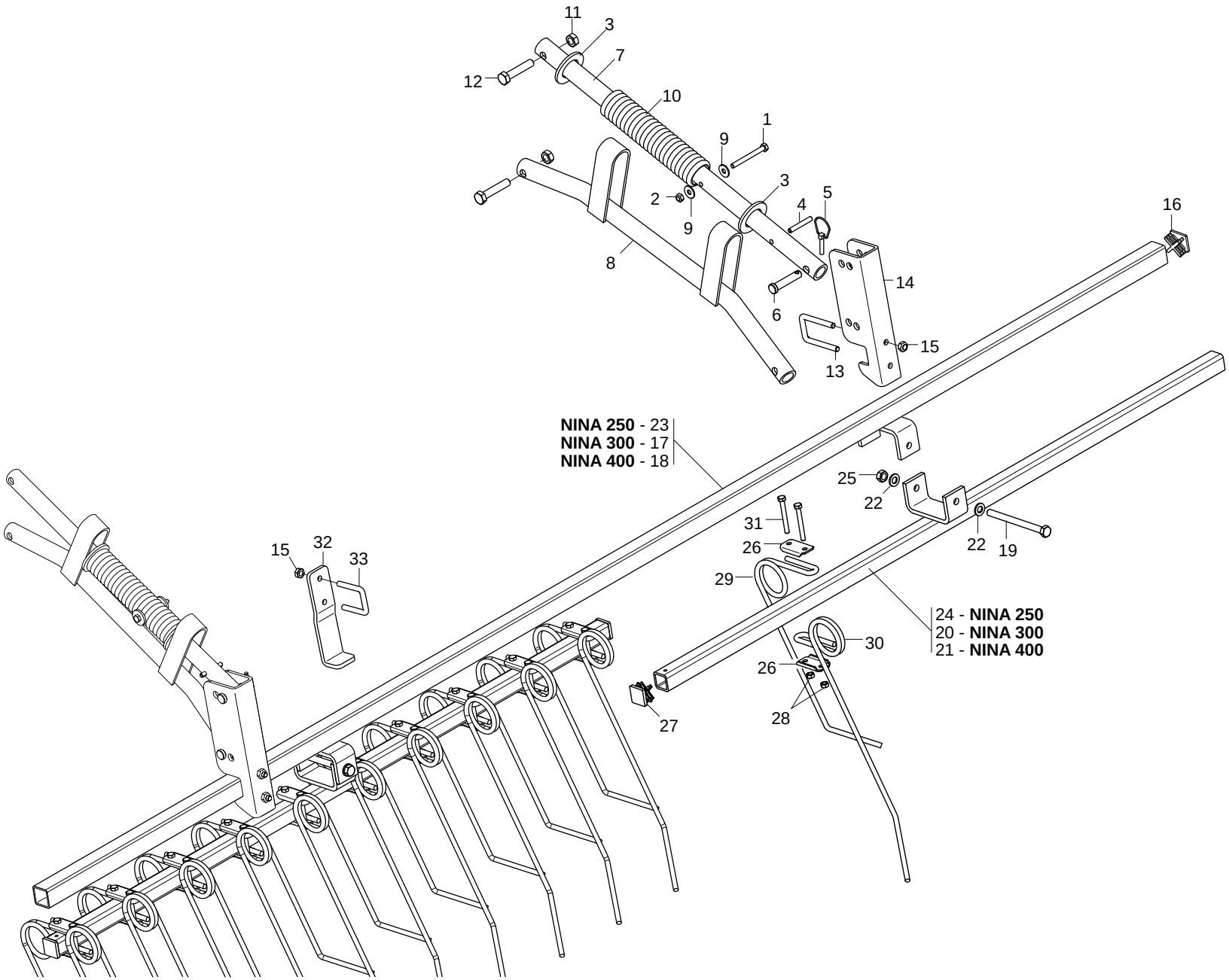

GASPARDO

cod. G19530853

ERPICE COPRISEME STANDARD

TAV. 211

Pos.	Cod.	Descrizione	Description	Description	Benennung	Descripcion
1	F01020086	VITE M 8X1,25X80 U5737 8.8 ZN	BOLT M8X1X80	VIS M8X1X80	SCHRAUBE M8X1X80	TORNILLO M8X1X80
2	F01220022	DADO M 8X1,25 D980 8 ZN	SELF LOCKING NUT M8X1,25 980V	ECROU AUTOBL. M8X1,25 980-V	SELBSTSP.MUTT. M8X1,25 980-V	DADO AUTOBL. M8X1,25 980-V
3	F01420118	ROS.M36 39X 66X 5 U6593 ZN	WASHER 39X66X5 6593	RONDELLE 39X66X5 6593	UNTERLEGSCHEIBE 39X66X5 6593	ARANDELA 39X66X5 6593
4	F02100146	SPINA E.P. 8X 55 U6873 C70 BR	PIN EL. .8 X55 DIN 1481	FICHE EL.8 X55 DIN 1481	SPANNSTIFT 8 X55 DIN 1481	CLAVIJA EL.8 X55 DIN 1481
5	F02200463	SPINA SCATTO D. 5 B/81 ZN	SNAP PIN D 5 B/81	FICHE A DETENTE D. 5 B/81	EINRASTSTIFT D 5 B/81	CLAVIJA DE MUELLE D 5 B/81
6	G07002569	PERNO 14 X68 ZN	PIN	PIVOT	ZAPFEN	PERNO
7	G16240310	TUBO INFERIORE	LOWER TUBE	TUBE INFERIEUR	UNTERES ROHR	TUBO INFERIOR
8	G16240340	TUBO SUPERIORE ERPICE	UPPER HARROW TUBE	TUBE SUPERIEUR HERSE	OBERES EGGENROHR	TUBO SUPERIOR GARDA
9	G20970032	RONDELLA 32X4X8,5	WASHER 32X4X8-5	RONDELLE 32X4X8-5	UNTERLEGSCHEIBE 32X4X8-5	ARANDELA 32X4X8-5
10	G18903560	MOLLA COMPRESSIONE ERPICE	SPRING.	RESSORT COMPL.	DRUCKFEDER	MUELLE COMP.
11	F01220255	DADO M14X 2 D980 8 ZN	NUT- TRISTOP M14	ECROU TRISTOP M14	MUTTER TRISTOP M14	TUERCA TRISTOP M14
12	F01020207	VIT. M14X 2X 70 U5737 8.8 ZN	BOLT M 14X70	VIS M 14X70	SCHRAUBE M 14X70	TORNILLO M 14X70
13	F20110710	CAV.Q.M10X 1,5X 50 51X 85 ZN	U BOLT	CAVALIER	VERBINDUNG	PERNO EN U
14	G16240300	SUPPORTO TUBO ERPICE	HARROW SUPPORT	SUPPORT HERSE	EGGENHALTERUNG	SOPORTE GRADA
15	F01220033	DADO M10X 1,5 D980 8 ZN	NUT M10X 1,5 D980 8 ZB	ECRO.M10X 1,5 D980 8 ZB	MUTT.M10X 1,5 D980 8 ZB	TUER.M10X 1,5 D980 8 ZB
16	F20120348	PUNTALE Q.40	TIP Q.40	MANCHON Q.40 PLASTIQUE	STTSSELSCHAFT Q.40	PUNTAL Q.40
17	G16240410	TUBO SUPERIORE ERPICE	UPPER HARROW TUBE	TUBE SUPERIEUR HERSE	OBERES EGGENROHR	TUBO SUPERIOR GARDA
18	G16240850	TUBO SUPPORTO ERPICE M400				
19	F01020179	VITE M12X1,75X150 5737 8.8 ZN	BOLT 12X150 5737 8.G GALVANIZ.	VIS 12X150 5737 8.G ZN	SCHRAUBE 12X150 5737 8.G ZN	TORNILLO 12X150 5737 8.G ZN
20	G16240430	TUBO INFERIORE ERPICE	LOWER HARROW TUBE	TUBE INFERIEUR HERSE	UNTERES ROHR EGGE	TUBO INFERIOR GRADA
21	G16240840	TUBO INF.ERPICE M400				
22	F01410076	ROS.M12 13X 24X2,5 U6592 ZN	PLANE WASHER D12 UNI 6592 ZN	RONDELLE D12 UNI 6592 ZN	SCHEIBE D12 UNI 6592 ZN	ARANDELA D12 UNI 6592 ZN
23	G16240370	TUBO ERPICE SUPERIORE 250				
24	G16240400	TUBO INFERIORE ERPICE	LOWER HARROW TUBE	TUBE INFERIEUR HERSE	UNTERES ROHR EGGE	TUBO INFERIOR GRADA
25	F01220048	DADO M12X1,75 D980 8 ZN	SELF LOCKING NUT M12X1,75 980V	ECROU AUTOBL. M12X1,75 980-V	SIEHE 00553312	DADO AUTOBL. M12X1,75 980-V
26	G07000026	PIASTR.DENTI A MOLLA ZN	GALVAN. SPRING TOOTHED PLATE	PLAQUE DENTS A RESSORT ZN	PLATTE FEDERZZHNE ZN	PLACA DIENTES DE MUELLE ZN
27	F20120346	PUNTALE Q 35 ALETT.POLIT.NERO				
28	F01220022	DADO M 8X1,25 D980 8 ZN	SELF LOCKING NUT M8X1,25 980V	ECROU AUTOBL. M8X1,25 980-V	SELBSTSP.MUTT. M8X1,25 980-V	DADO AUTOBL. M8X1,25 980-V
29	G18903640	MOLLA CORTA COPRISEME D.9	SPEC. SPRING SHORT TOOTH D.9	DENT HERSE RECOUVR COURTE D.9	SPEZIALFEDER M. KURZ.ZAHN D.9	MUELLE ESPEC.DIENTE CORTO D.9
30	G18903650	MOLLA LUNGA COPRISEME D.9	SPEC. SPRING LONG TOOTH D.9	DENT HERSE RECOUVR LONGUE D.9	SPEZIALFEDER M. LANG.ZAHN D.9	MUELLE ESPEC.DIENTE LARGO D.9
31	F01020083	VITE M 8X1,25X70 U5737 8.8 ZN	BOLT M 8X70	VIS M 8X70	SCHRAUBE M 8X70	TORNILLO M 8X70
32	G16073090	GUIDA BRACCIO OSCILL.COPRIS.				
33	F20110705	CAV.Q.M10X 1,5X 30 51X 62 ZN	U-BOLT GALVAN	CAVALIER ZN	BsGELBOLZEN ZN	PERNO EN U ZN

TAV. 130

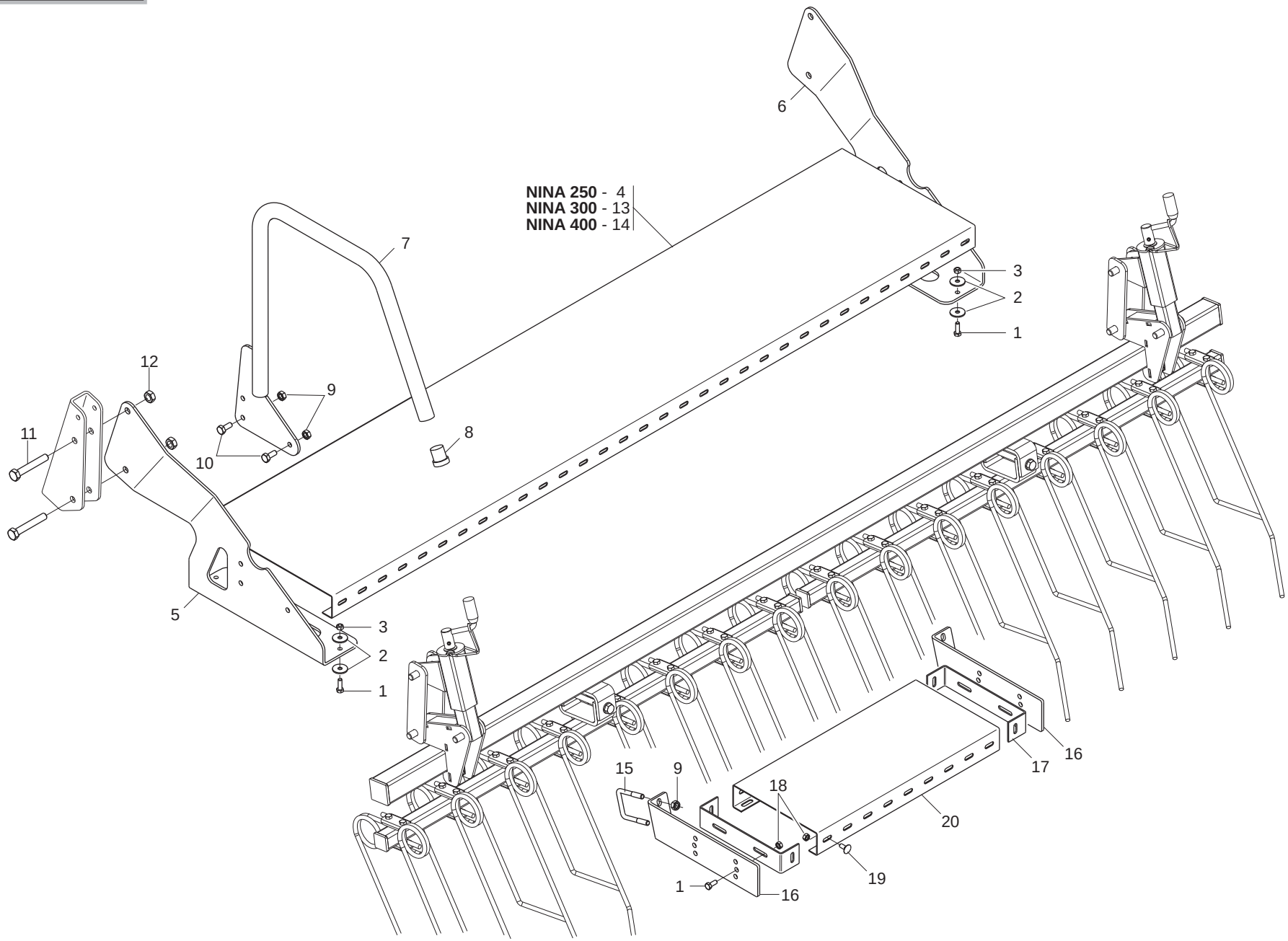

GASPARDO

cod. G19530853

PEDANE

TAV. 130

Pos.	Cod.	Descrizione	Description	Description	Benennung	Descripcion
1	F01020436	VITE M 8X1,25X 20 U5739 8.8 ZN	BOLT M 8X20	VIS M 8X20	SCHRAUBE M 8X20	TORNILLO M 8X20
2	F01410051	ROS.M8 8,4X 17X1,6 U6592 ZN	PLANE WASHER D.8	RONDELLE D.8	SCHEIBE D.8	ARANDELA D.8
3	F01220022	DADO M 8X1,25 D980 8 ZN	SELF LOCKING NUT M8X1,25 980V	ECROU AUTOBL. M8X1,25 980-V	SELBSTSP.MUTT. M8X1,25 980-V	DADO AUTOBL. M8X1,25 980-V
4	G16214160	PEDANA 400 X 1920 X 58 SP.2 ZN				
5	G16213720	SUPPORTO PEDANA SX				
6	G16213710	SUPPORTO PEDANA DX				
7	G16213750	CORRIMANO				
8	F05100194	TERMINALE ROTONDO D.30	ROUND END 30	PIECE TERMIN.RONDE 30	RUNDER ABSCHLUSS 30	TERMINAL REDONDO 30
9	F01220033	DADO M10X 1,5 D980 8 ZN	NUT M10X 1,5 D980 8 ZB	ECRO.M10X 1,5 D980 8 ZB	MUTT.M10X 1,5 D980 8 ZB	TUER.M10X 1,5 D980 8 ZB
10	F01020472	VITE M10X 1,5X25 U5739 8.8 ZN	BOLT 10X25 5739 8.G GALVANIZED	VIS 10X25 5739 8.G ZN	SCHRAUBE 10X25 5739 8.G ZN	TORNILLO 10X25 5739 8.G ZN
11	F01020210	VITE M14X 2X 80 U5737 8.8 ZN	BOLT M14X 2X 80 U5737 8.8 ZG	VIS M14X 2X 80 U5737 8.8 ZG	SCHRAUBE M14X 2X 80 U5737 8.8	TORNILLO M14X 2X 80 U5737 8.8
12	F01220255	DADO M14X 2 D980 8 ZN	NUT- TRISTOP M14	ECROU TRISTOP M14	MUTTER TRISTOP M14	TUERCA TRISTOP M14
13	G16310500	PEDANA MC250	PLATFORM MC250	MARCHEPIED MC250	TRITTBRETT MC250	PLATAFORMA MC250
14	G16214390	PEDANA 400 X 1620 X 58 SP2 ZN				
15	F20110715	CAV.Q.M10X 1,5X 30 61X 80 ZN				
16	G16242471	SUPPORTO SCALINO	STEP SUPPORT	SUPPORT MARCHE	STUFENHALTERUNG	SOPORTE ESCALON
17	G07000379	TERMINALE PEDANA ZN	GALVANIZED PLATFORM END	PIECE TERMINALE MARCHEPIED ZN	LAUFSTEGABSCHLUSS ZN	TERMINAL PLATAFORMA ZN
18	F01260043	DADO FLANG.M8 D6923 8.8 ZN	FLANGE NUT M8 DIN 6923 8.8 GAL	ECROU BRIDE .M8 DIN 6923 8.8 Z	GEFLANSCHTE MUTTER M8 DIN6923	TUERCA BRIDA M8 DIN 6923 8.8 Z
19	F01030495	VITE TTCN 90' M8X16 + DADO ZN	TTCN 90' BOLT M8X16 GALVANIZED	VIS TTCN 90' M8X16 ZN	SCHRAUBE TTCN 90' M8X16 ZN	TORNILLO TTCN 90' M8x16 ZN
20	G07000680	PEDANA 540 ZN	GALVANIZED PLATFORM 540	MARCHEPIED 540 ZN	TRITTBRETT 540 ZN	PLATAFORMA 540 ZN

TAV. 142

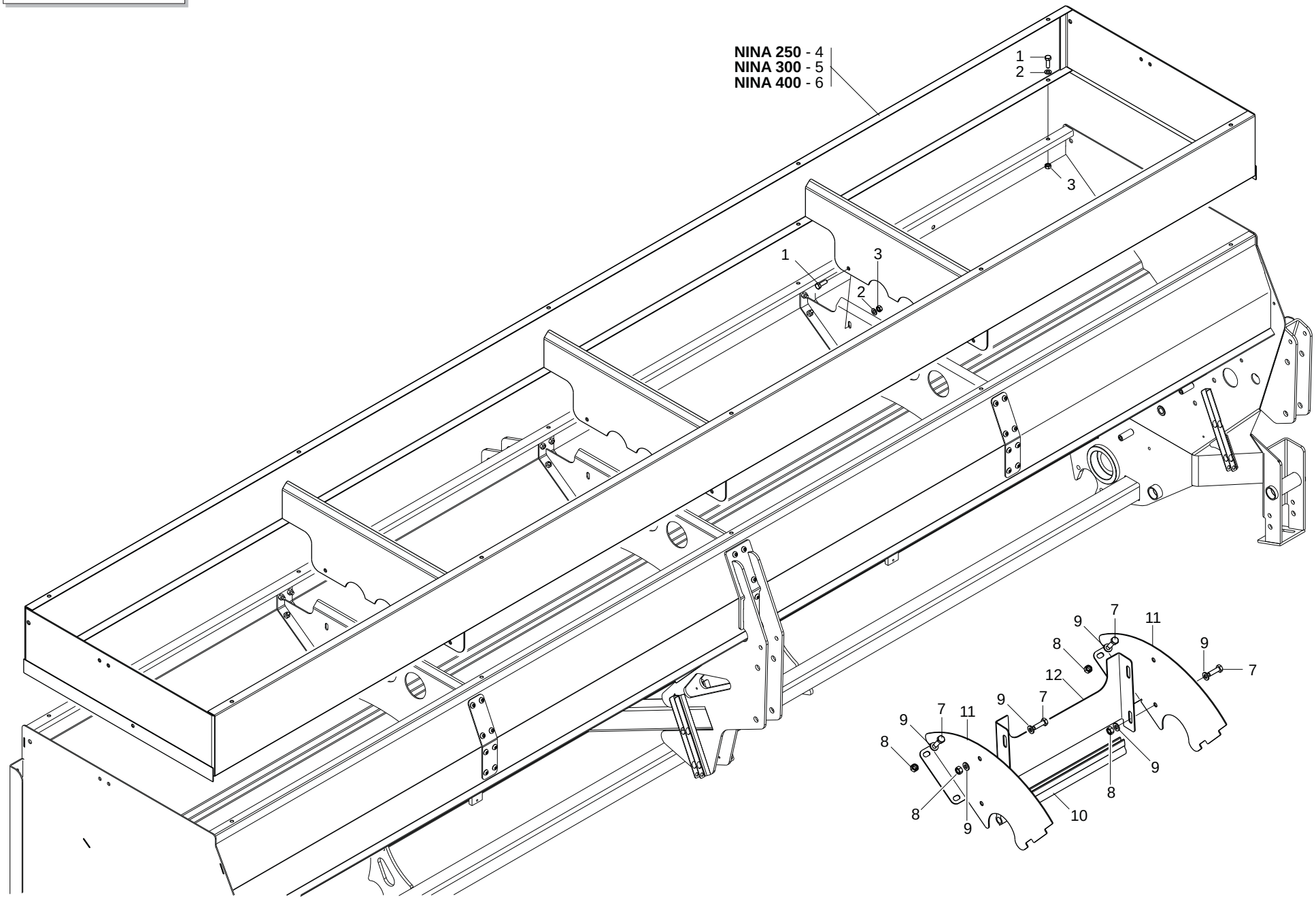

GASPARDO

SEPARATORI E RIALZO TRAMOGGIA

TAV. 142

Pos.	Cod.	Descrizione	Description	Description	Benennung	Descripcion
1	F01020436	VITE M 8X1,25X 20 U5739 8.8 ZN	BOLT M 8X20	VIS M 8X20	SCHRAUBE M 8X20	TORNILLO M 8X20
2	F01410051	ROS.M8 8,4X 17X1,6 U6592 ZN	PLANE WASHER D.8	RONDELLE D.8	SCHEIBE D.8	ARANDELA D.8
3	F01200244	DADO M 8X1,25 U5588 6.8 ZN	NUT M8	ECROU M8	MUTTER M8	DADO M8
4	G16214381	RIALZO TRAMOGGIA 250				
5	G16211483	RIALZO SERBATOIO 300				
6	G16214421	RIALZO TRAMOGGIA 400				
7	F01020404	VITE M 6X 1X20 U5739 8.8 ZN	BOLT 6X20 5739 8.G GALVANIZED	VIS 6X20 5739 8.G ZN	SCHRAUBE 6X20 5739 8.G ZN	TORNILLO 6X20 5739 8.G ZN
8	F01200232	DADO M 6X 1 U5588 6.8 ZN				
9	F01410037	ROS.M6 6,4X12,5X1,6 U6592 ZN	PLANE WASHER D.6	RONDELLE D.6	SCHEIBE D.6	ARANDELA D.6
10	F03011087	GUARNIZIONE BATTUTA COPERCHIO	COVER RABBET GASKET	GARNITURE BUTEE COUVERCLE	DICHTUNG DECKELANSCHLAG	JUNTA DE TOPE TAPA
11	G16221450	SEPARATORE TRASVERSALE TRAM.				
12	G16221460	SEPARATORE TRAMOGGIA				

TAV. 151

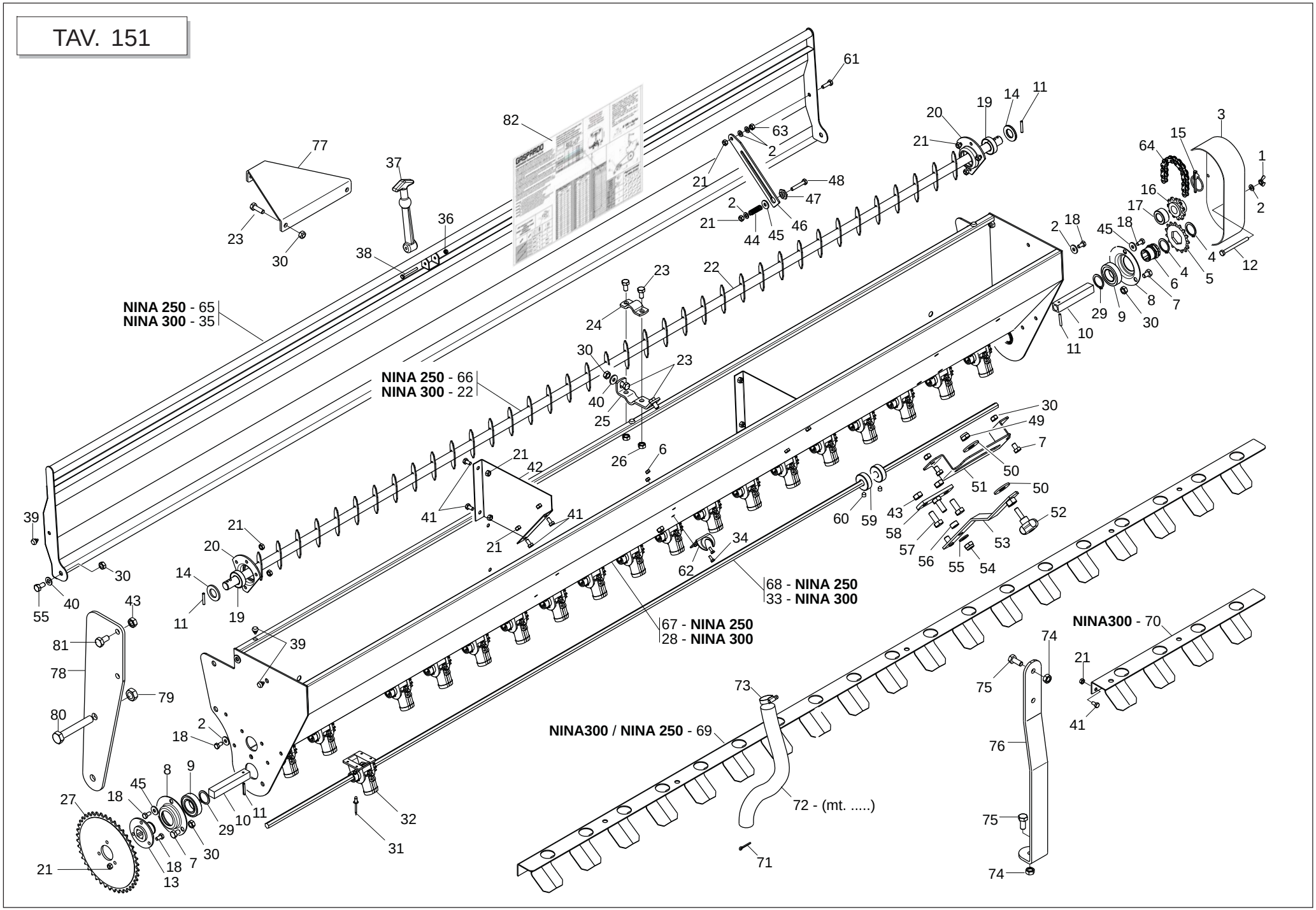

GASPARDO

TRAMOGGIA SEMINA ERBAI

TAV. 151

Pos.	Cod.	Descrizione	Description	Description	Benennung	Descripcion
1	F01240012	DADO M 6X 1 U5448 5.8 ZN	NUT 6 UNI 5448 5.8 ZN	ECROU 6 UNI 5448 5.8 ZN	MUTTER 6 UNI 5448 5.8 ZN	TUERCA 6 UNI 5448 5.8 ZN
2	F01410037	ROS.M6 6,4X12,5X1,6 U6592 ZN	PLANE WASHER D.6	RONDELLE D.6	SCHEIBE D.6	ARANDELA D.6
3	G17520740	CARTER	CASE	CARTER	GEHZUSE	C+RTER
4	F02050615	ANELLO E. DE 28X 1,5 U7435 C70	STOP RING 28 UNI 7435-75	BAGUE DE SERRAGE 28 UNI 7435-7	DRAHTSPRENGRING 28 UNI 7435-75	ANILLO PARADA 28 UNI 7435-75
5	G22250190	CORONA ASSE SEMINAT.Z-15 SV	PLANTING UNIT AXLE Z-15 RING G	COURONNE AXE SEMEUR Z-15 SV	KRANZ SZELEMENTACHSE Z-15 SV	CORONA EJE SEMBR. Z-15 SV
6	G22250441	MOZZO CORONA SEMINATORE SV/2	PLANTING UNIT CROWN HUB SV/2	MOYEU COURONNE SEMEUR SV/2	KRANZNABE SZELEMENT SV/2	CUBO CORONA SEMBRADOR SV/2
7	F01020432	VITE M 8X1,25X16 U5739 8.8 ZN	BOLT M 8X16	VIS M 8X16	SCHRAUBE M 8X16	TORNILLO M 8X16
8	G22230094	SUPPORTO CUSCINETTO	BEARING SUPPORT	SUPPORT PALIER	LAGERBsCHSE	SOPORTE COJINETE
9	F04010135	CUSC.D25 D47 B12 6005 2RS EX>				
10	G17530660	ASSE TRASMISSIONE TRAMOGG.400	TRANSMISSION AXLE	AXE TRANSMISSION	_BERTRAGUNGSACHSE	EJE TRANSMISIËN
11	F02100064	SPINA E.P. 4X 26 U6873 C70 BR				
12	F01020047	VITE M 6X 1X 70 U5737 8.8 ZN	BOLT 6 X70 5737 8.G GALVANIZED	VIS 6 X70 5737 8.G ZN	SCHRAUBE 6 X70 5737 8.G ZN	TORNILLO 6 X70 5737 8.G ZN
13	G17530030	FLANGIA SUPPORTO INGRANAGGIO	FLANGE SUPPORT	BRIDE SUPPORT	LAGERFLANSCH	BRIDA DE SOPORTE
14	G15321901	RONDELLA 17X25X2	WASHER 17X25X2	RONDELLE 17X25X2	UNTERLEGSCHEIBE 17X25X2	ARANDELA 17X25X2
15	F02100066	SPINA E.P. 4X 36 U6873 C70 BR				
16	G17530100	INGRAN. Z11 PER ALBERO MESCOLO	GEAR Z 11	ENGRENAGE Z 11	ZAHNRAD Z 11	ENGRANAJE Z 11
17	G18801860	BOCCOLA 17,25X30 X14	BUSHING 17,25X30X14 GALV.	BOITE 17,25X30X14 ZN	BsCHSE 17,25X30X14 ZN	CASQUILLO 17,25X30X14 ZN
18	F01020403	VITE M 6X 1X 16 U5739 8.8 ZN	BOLT M 6X16	VIS M 6X16	SCHRAUBE M 6X16	TORNILLO M 6X16
19	F04010161	CUSC.D17 D40 B12 6203 2RS EX	BEARING 6203	ROULEMENT 6203 2RS	LAGER 6203 2RS	COJINETE 6203 2RS SKF
20	G16220090	SUPPORTO CUSCINETTO	GALV.BEARING SUPPORT	SUPPORT PALIER ZN	LAGERBsCHSE ZN	SOPORTE COJINETE ZN
21	F01220011	DADO M 6X 1 D980 8 ZN	SELF LOCKING NUT M6	ECROU AUTOBL. M6	SELBSTSPERR.MUTTER M6	DADO AUTOBL. M6
22	G17520181	ALBERO MESCOLO TRAM. 300	HOPPER MIXER SHAFT 300	ARBRE MELANGE TREMIE 300	MISCHERWELLE TRICHTER 300	ARBOL MEZCLA TOLVA 300
23	F01020436	VITE M 8X1,25X 20 U5739 8.8 ZN	BOLT M 8X20	VIS M 8X20	SCHRAUBE M 8X20	TORNILLO M 8X20
24	G17520210	SUPPORTO SUP.ALBERO MESCOLO	UPPER SHAFT SUPPORT	SUPPORT SUP. ARBRE	OB. HALTERUNG WELLE	SOPORTE SUP. EJE
25	G17520220	SUPPORTO INF.ALBERO MESCOLO	UNDER SHAFT SUPPORT	SUPPORT INF. ARBRE	UNTERE HALTERUNG WELLE	SOPORTE INFERIOR EJE
26	F01200244	DADO M 8X1,25 U5588 6.8 ZN	NUT M8	ECROU M8	MUTTER M8	DADO M8
27	G20890128	CORONA Z-42 SP	RING GEAR Z-42 SP	COURONNE Z-42 SP	KRANZ Z-42 SP	CORONA Z-42 SP
28	G17520340	SERBATOIO 300 (23 USCITE)	TANK 300	RESERVOIR 300	BEHZLTER 300	DEPSITO 300
29	F02050101	ANELLO E. DE 25X 1,2 U7435 C70	SEEGER RING E. 25X1,2 7435 C70	SEEGER E. 25X 1,2 U7435 C70	SEEGERING E. 25X 1,2 U7435 C70	ANILLO E. 25X 1,2 U7435 C70
30	F01220022	DADO M 8X1,25 D980 8 ZN	SELF LOCKING NUT M8X1,25 980V	ECROU AUTOBL. M8X1,25 980-V	SELBSTSP.MUTT. M8X1,25 980-V	DADO AUTOBL. M8X1,25 980-V
31	F02250066	RIVETTO STR. 3X 9 U9200A AL	POP RIVET 3X9 ALUMINIUM	RIVET 3 X 9 ALL	REISSNIETE 3 X 9 ALU	REMACHE DESGAR. 3 X 9 AL
32	G15326680	DISTRIBUTORE ERBAI COMPL.	COMPL. GRASS BOX DISTRIBUTOR	DISTRIBUTEUR FOURRAG+RES COMPL	GRASVERTEILER KOMPL.	DISTRIBUIDOR PASTIZALES COMPL.
33	G17530051	ALBERO DISTRIB.TRAMOGGIA 300ZN	DISTRIB. SHAFT 300	ARBRE DISTRIB. 300	WELLE SZAPPARAT 300	EJE DISTRIB. 300
34	F01020362	VITE M 4X0,7X 12 U5739 8.8 ZN	SCREW 4X12 5739 8.G GALVANIZED	VIS 4X12 5739 8.G ZN	SCHRAUBE 4X12 5739 8.G ZN	TORNILLO 4X12 5739 8.G ZN
35	G17520070	COPERCHIO TRAMOGGIA 300	HOPPER COVER 300	COUVERCLE TREMIE 300	TRICHTERDECKEL 300	TAPA DE LA TOLVA 300
36	F01230016	DADO M 4X 0,7 D982 8 ZN	NORM.SELF-LOCKING NUT 4 GALVAN	ECROU AUTOB.NOR.4 ZN	SELBSTSP. MUTTER NOR. 4 ZN	TUERCA AUTOB. NOR. 4 ZN
37	F05150495	TIRANTE IN GOMMA	COUPLING TIE ROD	TRINGLE D'ATTELAGE	KUPPLUNGSSPANNSTANGE	TIRANTE DE ENGANCHE
38	F01020012	VITE M 4X0,7X 40 U5737 8.8 ZN	BOLT 4X40 5737 8.G GALVANIZ.	VIS 4X40 5737 8.G ZN	SCHRAUBE 4X40 5737 8.G ZN	TORNILLO 4X40 5737 8.G ZN
39	G19003160	TAPPO PER FORO D.7	PLUG FOR D.7 HOLE	BOUCHON POUR TROU D.7 P	FROPFEN FsR LOCH D.7 T	APN PARA AGUJERO D.7 DO
40	F01420048	ROS.M8 8,4X 24X 2 U6593 ZN	PLANE WASHER D.8	RONDELLE D.8	SCHEIBE D.8	ARANDELA D.8
41	F01020398	VITE M 6X 1X 12 U5739 8.8 ZN	BOLT M 6X12	VIS M 6X12	SCHRAUBE M 6X12	TORNILLO M 6X12
42	G17520370	SEPARATORE TRAMOGGIA	TANK SEPARATOR	SEPARATEUR RESERVOIR	ABSCHEIDER BEHZLTER	SEPARADOR DE DEPOSITO
43	F01200270	DADO M10X 1,5 U5588 6.8 ZN	NUT M10	ECROU M10	MUTTER M10	DADO M10
44	G65338048	MOLLA COMP.REGOL.FLUSS.M.ID.SV	FLOW REGUL. COMP. SPRING . M.I	RESSORT COMPL. REGL. FLUX M. I	DRUCKFEDER FLUSSEINSTELLUNG M.	MUELLE COMP. REGUL.FLUJO M.ID.
45	F01420036	ROS.M6 6,4X 18X 2 U6593 ZN	FLAT WASHER 6-6X 18X2 6593 ZN	ROND. PLATE 6-6X 18X2 6593 ZN	SCHEIBE 6-6X 18X2 6593 ZN	ARAND. PLANA 6-6X 18X2 6593 ZN
46	G17520380	ASTA SICUREZZA COPERCHIO	SAFETY ROD COVER	TIGE DE SECURITE COUVERCLE	SICHERHEITSSTAB DECKEL	VARILLA DE SEGURIDAD TAPA
47	G17520390	PERNO BLOCCO ASTA	ROD STOP PIN	PIVOT BLOCAGE TIGE	ZAPFEN STABBLOCK	PERNO BLOQUEO VARILLA
48	F01020411	VITE M 6X 1X 35 U5739 8.8 ZN	BOLT 6 X35 5739 8.G GALVANIZ.	VIS 6 X35 5739 8.G ZN	SCHRAUBE 6 X35 5739 8.G ZN	TORNILLO 6X35 5739 8.G ZN
49	G16230360	DADO M12X1,75 SX AUTOB.	M12X1,75 LEFT SELF-LOCK NUT	ECROU M12X1,75 GCH AUTOBLOCANT	MUTTER M12X1,75 LINKS SELBSTSP	TUERCA M12X1,75 IZ. AUTO.
50	F01420084	ROS.M14 14,5X 36X 3 U6593 ZN	GALVANIZED WASHER 14 X36 X3	RONDELLE 14 X36 X3 ZN	UNTERLEGSCHEIBE 14 X36 X3 ZN	ARANDELA 14 X36 X3 ZN
51	G17520260	SUPPORTO INDICATORE	INDICATOR SUPPORT	SUPPORT INDICATEUR	ANZEIGERHALTERUNG	SOPORTE CORTANTE
52	F06220014	VOLANTINO 8 LOBI M12X40 SX	8-LOBE HANDWHEEL M12X40 LEFT	VOLANT 8 LOBES M12X40 GCH	HANDRAD 8 BUCKEL M12X40 LINKS	VOLANTE 8 LOBI M12X40 IZQ
53	G17520250	INDICE REGOLAZIONE	REGULATION INDEX	INDEX REGLAGE	ANZEIGER EINSTELLUNG	NDICE REGULACIËN
54	F01230048	DADO M10X 1,5 D982 8 ZN	NUT AUTOBLOC. M10 ZB	ECROU AUTOBLOC. M10 ZB	SCHEIBE AUTOBBLOC. M10 ZB	TUERCA AUTOBLOC M10 ZB

TAV. 151

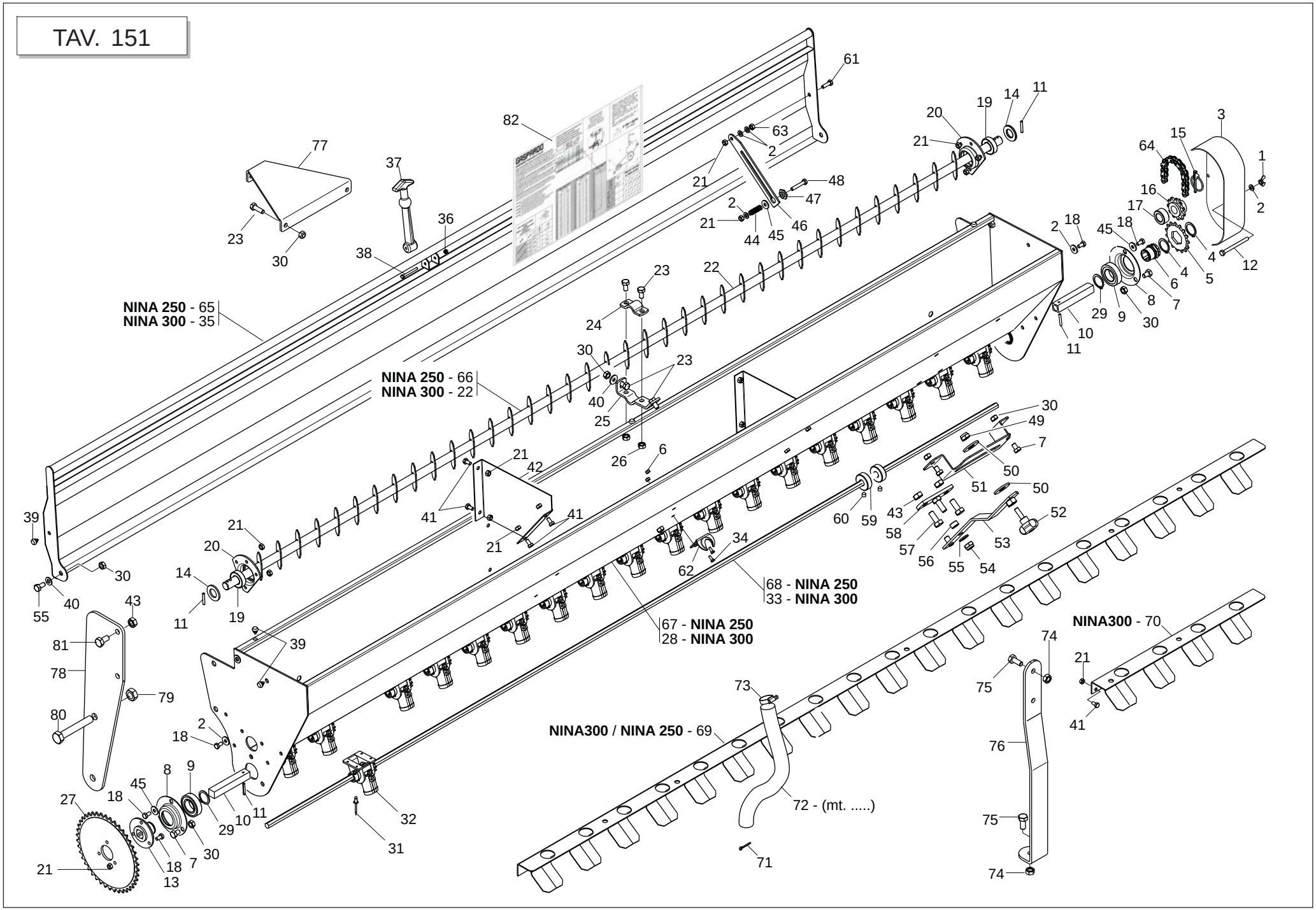

GASPARDO

TRAMOGGIA SEMINA ERBAI

TAV. 151

Pos.	Cod.	Descrizione	Description	Description	Benennung	Descripcion
55	F01020440	VITE M 8X1,25X25 U5739 8.8 ZN	BOLT M8 X25 5739 8.8 ZN	VIS M8 X25 5739 8.8 ZN	SCHRAUBE M8 X25 5739 8.8 ZN	TORNILLO M8 X25 5739 8.8 ZN
56	G20980072	BOCCOLA 10,25X16X8,5	BUSHING 10.25X16X8.5	BOITE 10-25X16X8-5	BsCHSE 10-25X16X8-5	CASQUILLO 10-25X16X8-5
57	F01020470	VITE M10X 1,5X20 U5739 8.8 ZN	BOLT M 10X20	VIS M 10X20	SCHRAUBE M 10X20	TORNILLO M 10X20
58	G17520290	SUPPORTO INDICATORE	INDICATOR SUPPORT	SUPPORT INDICATEUR	ANZEIGERHALTERUNG	SOPORTE CORTANTE
59	G17520270	BOCCOLA DI MOVIMENTAZIONE	BUSHING	BOITE	B_CHSE	CASQUILLO
60	F01050085	VIT.M 6X 1X 8 U5927	GRUB-SCREW 6X 8 UNI 5927	GOUJON 6X 8 UNI 5927	STIFT 6X 8 UNI 5927	TORNILLO SIN CABEZA 6X 8 UNI 5
61	F01020404	VITE M 6X 1X20 U5739 8.8 ZN	BOLT 6X20 5739 8.G GALVANIZED	VIS 6X20 5739 8.G ZN	SCHRAUBE 6X20 5739 8.G ZN	TORNILLO 6X20 5739 8.G ZN
62	F02250705	OCCHIELLO AGGANCIO ART.360	HOOK EYE	OEILLET D'ACCROCHAGE	KUPPLUNGSTSE	ARGOLLA DE ENGANCHE
63	F01200232	DADO M 6X 1 U5588 6.8 ZN				
64	F06080224	CATENA 1/2 ISO 084 24 MAGLIE				
65	G17520040	COPERCHIO TRAMOGGIA 250	HOPPER COVER 250	COUVERCLE TREMIE 250	TRICHTERDECKEL 250	TAPA DE LA TOLVA 250
66	G17520161	ALBERO MESCOLO TRAMOGGIA 250	HOPPER MIXER SHAFT 250	ARBRE MELANGE TREMIE 250	MISCHERWELLE TRICHTER 250	ARBOL MEZCLA TOLVA
67	G17520320	SERBATOIO 250 (19 USCITE)	TANK 250	RESERVOIR 250	BEHZLTER 250	DEPSITO 250
68	G17530040	ALBERO DISTRIB.TRAMOGGIA 250	DISTRIB. SHAFT 250	ARBRE DISTRIB. 250	WELLE SZAPPARAT 250	EJE DISTRIB. 250
69	G17510070	SPARPAGLIATORE	DISPERSING UNIT	+PARPILLEUR	VERSTREUER	ESPARCIDOR
70	G17510080	PROLUNGA SPARPAGLIATORE	DISPERSING UNIT EXTENSION	RALLONGE +PARPILLEUR	VERL-NGERUNG VERSTTREUER	PROLONGACIËN ESPARCIDOR
71	F02200197	COPIGLIA 4X 50 U1336 ZN	SPLIT PIN 4 X50 1336 GALVAN.	GOUPILLE 4 X50 1336 ZN	SPLINT 4 X50 1336 ZN	PASADOR 4 X50 1336 ZN
72	F03100319	TUBO CRISTALLO 25X33	PIPE- ANTIFREEZE NEU.TRA.25X33	TUBE PVC TRA. 25X33	ROHR PVC FROSTSCHUTZ NEU.TRA.2	TUBO PVC ANTICONG. 25X33
73	F02300018	FASCETTA STRING. 25/40 H.8	STRING FASTEN.STRAPS 25/40 H.8	COLLIER DE SERRAGE 25/40 H.8	SCHELLE 25/40 H.8	ABRAZADERA 25/40 H.8
74	F01220033	DADO M10X 1,5 D980 8 ZN	NUT M10X 1,5 D980 8 ZB	ECRO.M10X 1,5 D980 8 ZB	MUTT.M10X 1,5 D980 8 ZB	TUER.M10X 1,5 D980 8 ZB
75	F01020476	VITE M10X 1,5X30 U5739 8.8 ZN	BOLT M 10X30	VIS M 10X30	SCHRAUBE M 10X30	TORNILLO M 10X30
76	G17521540	SUPPORTO SPARPAGLIATORE				
77	G17510600	SUPPORTO CENTR.TRAMOGGIA ERBAI				
78	G17510610	SUPPORTO LATER.TRAMOGGIA ERBAI				
79	F01220255	DADO M14X 2 D980 8 ZN	NUT- TRISTOP M14	ECROU TRISTOP M14	MUTTER TRISTOP M14	TUERCA TRISTOP M14
80	F01020212	VITE M14X 2X 90 U5737 8.8 ZN	BOLT M14X 2X 90 U5737 8.8 ZB	VIS M14X 2X 90 U5737 8.8 ZB	SCHARUBE M14X2X 90 U5737 8.8ZB	TORNILLO M14X 2X 90 U5737 8.8
81	F01020472	VITE M10X 1,5X25 U5739 8.8 ZN	BOLT 10X25 5739 8.G GALVANIZED	VIS 10X25 5739 8.G ZN	SCHRAUBE 10X25 5739 8.G ZN	TORNILLO 10X25 5739 8.G ZN
82	G19706911	TABELLA SEMINA TR.ERBAI				

TAV. 161

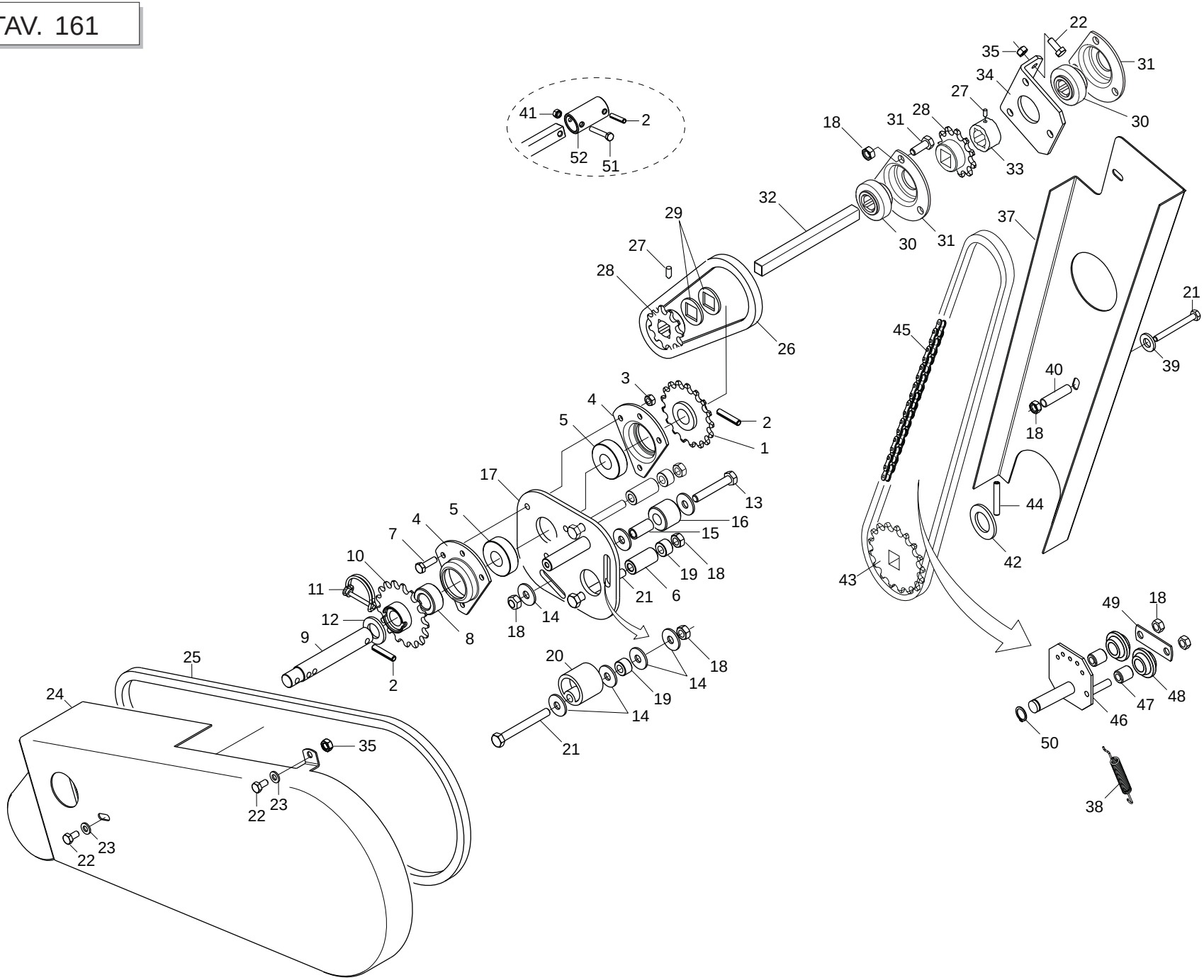

GASPARDO

TRASMISSIONE TRAMOGGIA SEMINA ERBAI

TAV. 161

Pos.	Cod.	Descrizione	Description	Description	Benennung	Descripcion
1	G17530080	INGRANAGGIO Z17 CON FORO	GEAR Z17 WITH HOLE	ENGRENAGE Z17 AVEC TROU	ZAHNRAD Z17 MIT BOHRUNG	ENGRANAJE Z17 CON FORO
2	F02100114	SPINA E.P. 6X 30 U6873 C70 BR	ELASTIC PIN 6X30	GOUJON ELASTIQUE 6X30	SPANNHUELSE 6X30	ESPINA ELASTICA 6X30
3	F01220011	DADO M 6X 1 D980 8 ZN	SELF LOCKING NUT M6	ECROU AUTOBL. M6	SELBSTSPERR.MUTTER M6	DADO AUTOBL. M6
4	G16220090	SUPPORTO CUSCINETTO	GALV.BEARING SUPPORT	SUPPORT PALIER ZN	LAGERBsCHSE ZN	SOPORTE COJINETE ZN
5	F04010161	CUSC.D17 D40 B12 6203 2RS EX	BEARING 6203	ROULEMENT 6203 2RS	LAGER 6203 2RS	COJINETE 6203 2RS SKF
6	G20980086	BOCCOLA DIST.D.8,5X16X31	BUSHING SPAC.. D.8-5X16X31	BOITE ENTRETOISE D. 8-5X16X31	VERTEILERBsCHSE D.8-5X16X31	CASQUILLO DIST. D.8-5X16X31
7	F01020404	VITE M 6X 1X20 U5739 8.8 ZN	BOLT 6X20 5739 8.G GALVANIZED	VIS 6X20 5739 8.G ZN	SCHRAUBE 6X20 5739 8.G ZN	TORNILLO 6X20 5739 8.G ZN
8	G18801860	BOCCOLA 17,25X30 X14	BUSHING 17,25X30X14 GALV.	BOITE 17,25X30X14 ZN	BsCHSE 17,25X30X14 ZN	CASQUILLO 17,25X30X14 ZN
9	G17530010	PERNO PORTA INGRANAGGI				
10	G16220100	INGRANAGGIO Z-17	GEAR Z.17	ENGRENAGE Z.17	ZAHNRAD Z.17	ENGRANAJE Z.17
11	F02200595	SPINOTTO X INGRANAGGIO				
12	F01410100	ROS.M16 17X 30X 3 U6592 ZN	PLANE WASHER D16 UNI 6592 ZN	RONDELLE D16 UNI 6592 ZN	SCHEIBE D.16 UNI 6592 ZN	ARANDELA D16 UNI 6592 ZN
13	F01020072	VITE M 8X1,25X50 U5737 8.8 ZN	BOLT M 8X1,25X50 U5737 8.8 ZG	VIS M 8X1,25X50 U5737 8.8 ZG	SCHRAUBE M 8X1,25X50 U5737 8.8	TORNILLO M 8X1,25X50 U5737 8.8
14	F01420048	ROS.M8 8,4X 24X 2 U6593 ZN	PLANE WASHER D.8	RONDELLE D.8	SCHEIBE D.8	ARANDELA D.8
15	G18801720	BOCCOLA 8,1X12X24,5 ZN				
16	G19003360	RULLO TENDICATENA 12,5 X27X 22	CHAIN TIGHTENER ROLLER	ROULEAU TENDEUR DE CHAINE	ROLLE KETTENSPANNER	RODILLO TENSOR DE LA CADENA
17	G17530960	SUPPORTO RINVIO TRASMISSIONE				
18	F01220022	DADO M 8X1,25 D980 8 ZN	SELF LOCKING NUT M8X1,25 980V	ECROU AUTOBL. M8X1,25 980-V	SELBSTSP.MUTT. M8X1,25 980-V	DADO AUTOBL. M8X1,25 980-V
19	G20980057	BOCCOLA 16X10X8,5	BUSHING 16X10X8,5	BOITE 16X10X8,5	BsCHSE 16X10X8,5	CASQUILLO 16X10X8,5
20	G66248207	TENDICATENA SPAND. SP-520	CHAIN TENSIONER	TENDEUR DE CHAINE EPAND. ENGR.	KETTENSPANNER DsNGERSTR. SP-52	TENSOR DE CADENA ABON. SP-520
21	F01020083	VITE M 8X1,25X70 U5737 8.8 ZN	BOLT M 8X70	VIS M 8X70	SCHRAUBE M 8X70	TORNILLO M 8X70
22	F01020398	VITE M 6X 1X 12 U5739 8.8 ZN	BOLT M 6X12	VIS M 6X12	SCHRAUBE M 6X12	TORNILLO M 6X12
23	F01410037	ROS.M6 6,4X12,5X1,6 U6592 ZN	PLANE WASHER D.6	RONDELLE D.6	SCHEIBE D.6	ARANDELA D.6
24	G17520130	CARTER PROTEZIONE				
25	F06080048	CATENA 1/2 ISO 083 92 MAGLIE				
26	F06080016	CATENA 1/2 ISO 083 38 MAGLIE				
27	F01050085	VIT.M 6X 1X 8 U5927	GRUB-SCREW 6X 8 UNI 5927	GOUJON 6X 8 UNI 5927	STIFT 6X 8 UNI 5927	TORNILLO SIN CABEZA 6X 8 UNI 5
28	G17530070	INGRANAGGIO Z11 FORO QUADRO	GEAR Z11 SQUARE HOLE	ENGRENAGE Z11 TROU CARR+	ZAHNRAD Z11 QUADRATISCHE BOHRU	ENGRANAJE Z11 AGUJERO CUADRADO
29	G18701650	RONDELLA FORO QUADRO ZN	WASHER 16,5X30X2,5 ZN	RONDELLE 16,5X30X2,5 ZN	UNTERLEGSCHEIBE 16,5X30X2,5 ZN	ARANDELA 16,5X30X2,5 ZN
30	G14830390	CUSCINETTO FORO QUADRO	SQUARE-HOLED BEARING	ROULEMENT AL+SAGE CARR+	VIERKANTLAGER	COJINETE ORIFICIO CUADRADO
31	G22230086	SUPPORTO CUSCINETTO TAGLIATO	CUT BEARING SUPPORT	SUPPORT PALIER COUPE	HALTERUNG LAGER MIT SCHNITT	SOPORTE COJINETE CORTADO
32	G17530020	ASSE DI TRASMISSIONE	DRIVE AXLE	AXE DE TRANSMISSION	ANTRIEBSACHSE	-RBOL DE TRANSMISIËN
33	G22500142	FERMO ASSI	AXLE STOP	ARRET AXES	FESTSTELLVORRICHTUNG ACHSEN	BLOQUEO EJES
34	G16230160	STAFFA SUPPORTO CUSCINETTO	BEARING SUPPORT BRACKET	+TRIER SUPPORT ROULEMENT	LAGERHALTERUNGSB_GEL	ESTRIBO SOPORTE COJINETE
35	F01220011	DADO M 6X 1 D980 8 ZN	SELF LOCKING NUT M6	ECROU AUTOBL. M6	SELBSTSPERR.MUTTER M6	DADO AUTOBL. M6
36	F01020427	VITE M 8X1,25X12 U5739 8.8 ZN	BOLT 8X12 5739 8.G GALVANIZ.	VIS 8X12 5739 8.G ZN	SCHRAUBE 8X12 5739 8.G ZN	TORNILLO 8X12 5739 8.G ZN
37	G16230490	CARTER TRASMISSIONE				
38	G18903280	MOLLA TENDICATENA	TENSIONER SPRING	RESSORT TENDEUR DE CHAINE	FEDER KETTENSPANNER	MUELLE TENSOR DE LA CADENA
39	F01410051	ROS.M8 8,4X 17X1,6 U6592 ZN	PLANE WASHER D.8	RONDELLE D.8	SCHEIBE D.8	ARANDELA D.8
40	G16230640	DISTANZIALE CARTER TRSM.				
41	F01200022	DADO M 6X 1 U5587 6.8 ZN	NUT M6	ECROU M6	MUTTER M6	DADO M6
42	F01410135	ROS.M22 23X 39X 3 U6592 ZN	PLANE WASHER D.22	BAGUE D.22	SCHEIBE D.22	ARANDELA D.22
43	G07002669	INGRANAGGIO R.L. Z-20 DX	FREE WHEEL GEAR Z-20 LEFT	ENGRENAGE ROUE LIBRE Z-20 GCH	ZAHNRAD FREILAUF Z-20 LINKER	ENGRANAJE R.LIBRE Z-20 IZQ
44	F02100118	SPINA E.P. 6X 36 U6873 C70 BR	PIN EL. 6 X36 DIN 1481	FICHE EL. 6 X36 DIN 1481	SPANNSTIFT 6 X36 DIN 1481	CLAVIJA EL.6 X36 DIN 1481
45	F06080110	CATENA 1/2 ISO 084 110 MAGLIE	CHAIN 110 LINKS	CHAINE 110 MAILLES	KETTE 110 GLIEDER	CADENA 110 ESLABN L
46	G07000269	ASS.TENDICATENA	CHAIN TIGHTENER	ESSIEU TENDEUR DE CHAINE	EINHEIT KETTENSPANNER	TENSOR DE CADENA
47	G07000273	BUSSOLA TENDICATENA	CHAIN TIGHTENER BUSH	DOUILLE TENDEUR DE CHAINE	BsCHSE KETTENSPANNER	CASQUILLO TENSOR DE CADENA
48	G07000134	RULLO TENDICATENA	CHAIN TIGHTENER ROLLER	ROULEAU TENDEUR DE CHAINE	ROLLE KETTENSPANNER	RODILLO TENSOR DE LA CADENA
49	G07000272	PIASTRINA CHIUSURA TENDICATENA	CHAIN TIGHTENER CLOSING PLATE	PLAQUETTE FERM. TEND. DE CHAIN	KETTENSPANNERSCHLIESS-PLATTE	PLACA DE CIERRE TENSOR DE CADE
50	F02050604	ANELLO E. DE 14X 1 U7435 C70	STOP RING 14 UNI 7435-75	BAGUE ARR.14 UNI 7435-75	RING 14 UNI 7435-75	ANILLO PARADA 14 UNI 7435-75
51	F01020040	VITE M 6X 1X 40 U5737 8.8 ZN	BOLT 6 X40 5737 8.G GALVANIZED	VIS 6 X40 5737 8.G ZN	SCHRAUBE 6 X40 5737 8.G ZN	TORNILLO 6 X40 5737 8.G ZN
52	G17530090	DISTANZ. PER DOPPIA TRASMISS.				
53	F01200022	DADO M 6X 1 U5587 6.8 ZN	NUT M6	ECROU M6	MUTTER M6	DADO M6

TAV. 171

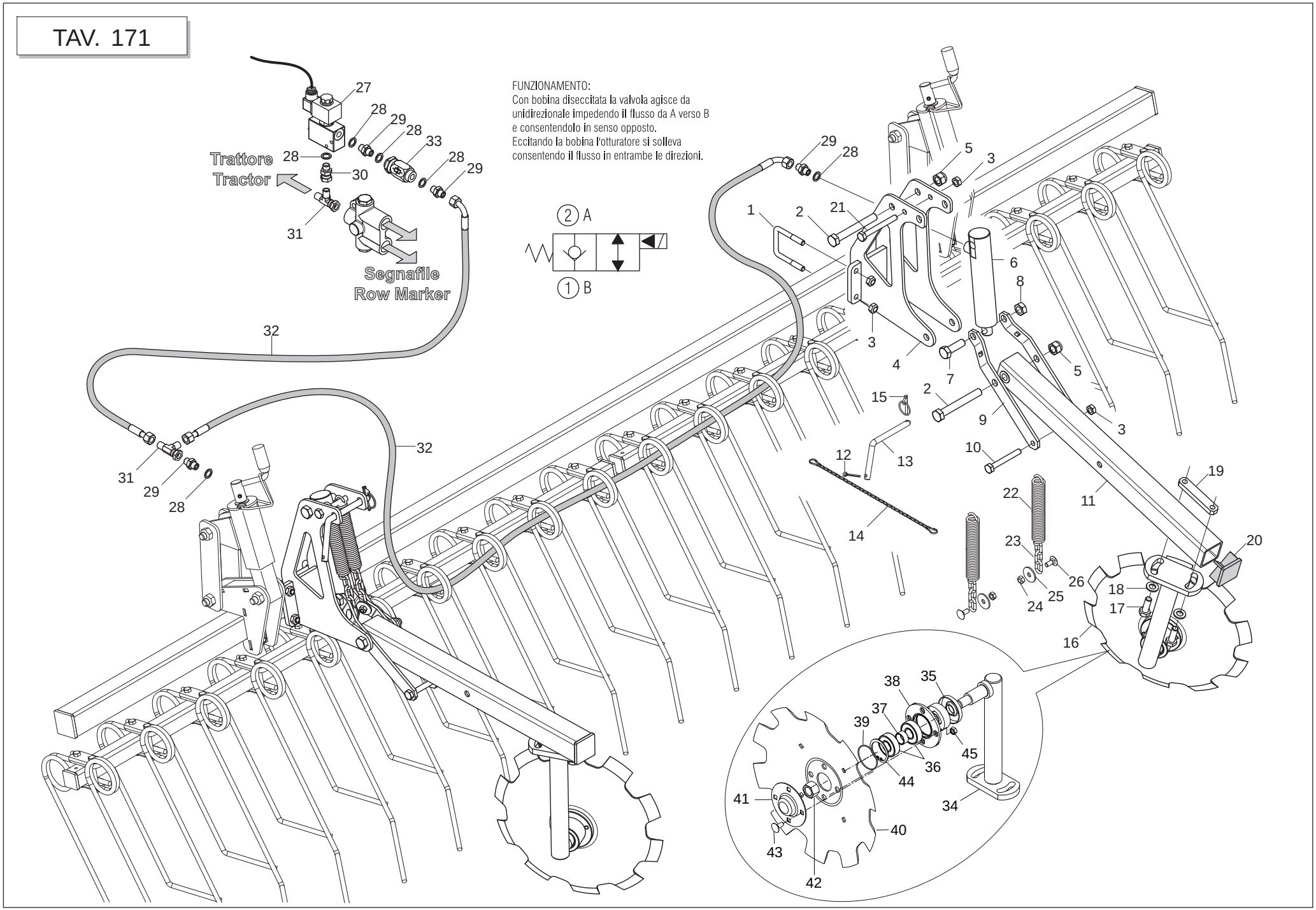

GASPARDO

TRACCIASENTIERI POSTERIORE

TAV. 171

Pos.	Cod.	Descrizione	Description	Description	Benennung	Descripcion
1	F20110715	CAV.Q.M10X 1,5X 30 61X 80 ZN				
2	F01020214	VITE M14X 2X100 U5737 8.8 ZN	BOLT 14X100 5737 8.G GALVANIZ.	VIS 14X100 5737 8.G ZN	SCHRAUBE 14X100 5737 8.G ZN	TORNILLO 14X100 5737 8.G ZN
3	F01220033	DADO M10X 1,5 D980 8 ZN	NUT M10X 1,5 D980 8 ZB	ECRO.M10X 1,5 D980 8 ZB	MUTT.M10X 1,5 D980 8 ZB	TUER.M10X 1,5 D980 8 ZB
4	G16070940	SUPPORTO TRACCIASENTIERI	SUPPORT	SUPPORT	HALTERUNG	SOPORTE
5	F01230072	DADO M14X1,5 D982 6.6 ZN	SELF LOCKING NUT M14X1,5	ECROU AUTOBL. M14X1,5	SELBSTSP.MUTT. M14X1,5	DADO AUTOBL. M14X1,5
6	G16910360	CILINDRO SE 25X35-100	CYLINDER SE 25X35-100	CYLINDRE SE 25X35-100	ZYLINDER SE 25X35-100	CILINDRO SE 25X35-100
7	F01020198	VIT.M14X 2X 45 U5737 8.8 ZN				
8	F01220255	DADO M14X 2 D980 8 ZN	NUT- TRISTOP M14	ECROU TRISTOP M14	MUTTER TRISTOP M14	TUERCA TRISTOP M14
9	G16070930	LEVA SOLLEVAMENTO	LIFTING LEVER	LEVIER LEVAGE	HEBEL HEBUNG	PALANCA LEVANTAMIENTO
10	F01020128	VITE M10X 1,5X80 U5737 8.8 ZN				
11	G16070850	BRACCIO SUPPORTO DISCO	DISK ARM	BRAS DISQUE	SCHEIBENARM	BRAZO DISCO
12	F02200227	COPIGLIA 5X 30 U1336 ZN	SPLIT PIN 5 X30 1336 GALVAN.	GOUPILLE 5 X30 1336 ZN	SPLINT 5 X30 1336 ZN	PASADOR 5 X30 1336 ZN
13	G22280025	CHIAVISTELLO PUNTELLO ID	PROP LATCH ID	VERROU ETRESILLON ID	RIEGEL STsTZE ID	PESTILLO PUNTAL ID
14	G13812311	CATENELLA CON MOSCHETTONE	CHAIN WITH SPRING CATCH	CHAINETTE AVEC MOUSQUETON	KETTE MIT KARABINERHAKEN	CADENA CON GANCHO
15	F02200452	SPINA SCATTO D.4,4 B/80 ZN	SNAP PIN D.4-4 B/80	FICHE A DETENTE D. 4-4 B/80	EINRASTSTIFT D 4-4 B/80	CLAVIJA DE MUELLE D.4-4 B/80
16	G15317292	MONT.DISCO SEGNAFILE				
17	F01020512	VITE M12X1,75X35 U5739 8.8 ZN	SCREW M 12X35	VIS M 12X35	SCHRAUBE M 12X35	TORNILLO M 12X35
18	F01410076	ROS.M12 13X 24X2,5 U6592 ZN	PLANE WASHER D12 UNI 6592 ZN	RONDELLE D12 UNI 6592 ZN	SCHEIBE D12 UNI 6592 ZN	ARANDELA D12 UNI 6592 ZN
19	G16070920	SCONTRO 100X20 -10 2M12 80	STRIKER PLATE 100X20 -10 2M12	BUTEE 100X20 -10 2M12 80	ANSCHLAG 100X20 -10 2M12 80	ELEMENTO DE EMPALME 100X20
20	F20120349	PUNTALE Q.50 ALETT.POLIT.NERO				
21	F01020130	VITE M10X 1,5X90 U5737 8.8 ZN	BOLT M 10X90	VIS M 10X90	SCHRAUBE M 10X90	TORNILLO M 10X90
22	G18903540	MOLLA TRAZIONE SCARPETTE	PLANTER SHOE TRACTION SPRING	RESSORT TRACTION SABOTS	ZUGFEDER SZSCHAREN	MUELLE TRACCIN GUA APOYO AR
23	G16041240	CATENA GENOVESE D.5 L.79 ZN	GENOAN CHAIN D.5 L.79 ZN	CHAINE GENOISE D.5 L.79 ZN	KETTE GENOVESE D.5 L.79 ZN	CADENA GENOVESA D.5 L.79 ZN
24	F01220022	DADO M 8X1,25 D980 8 ZN	SELF LOCKING NUT M8X1,25 980V	ECROU AUTOBL. M8X1,25 980-V	SELBSTSP.MUTT. M8X1,25 980-V	DADO AUTOBL. M8X1,25 980-V
25	F01420048	ROS.M8 8,4X 24X 2 U6593 ZN	PLANE WASHER D.8	RONDELLE D.8	SCHEIBE D.8	ARANDELA D.8
26	F01060040	BUL.M 8X1,25X 20 U5732 4.6 ZG	BOLT 8 X20 5732 4.6 GALVANIZED	VIS 8 X20 5732 4.6 ZN	SCHRAUBE 8 X20 5732 4.6 ZN	TORNILLO 8 X20 5732 4.6 ZN
27	G16070900	VALVOLA CABLATA	VALVE	SOUPAPE	VENTIL	VALVULA
28	F01500012	RONDELLA IN RAME 1/4"	WASHER	RONDELLE	SCHEIBE	ARANDELA
29	F03150266	NIPPLO MM CIL-CIL 1/4-1/4 ZN	NIPPLE GALV.CYL.MALE 1/4 ZN	NIPPLE MALE CYL. 1/4 ZN	NIPPELZYL.1/4 ZN	NIPLE MACHO CIL.1/4 ZN
30	F03150045	NIPPLO MF GIREVOLE 1/4 ZN CIL	NIPPLE MF GIREVOLE 1/4 ZN CIL.	NIPPLE MF GIREVOLE 1/4 ZN CIL.	NIPPEL MF GIREV. 1/4 ZN. CIL	NIPLE MF GIREVOLE 1/4 ZN CIL.
31	F03151217	RACCORDO -T- LATER.M-M-FG 1/4	T M-FG-M + CONNECTION PIPE	RACCORD T M-FG-M 1/4	ANSCHLUSST M-FG-M 1/4	UNION T M-HG-M 1/4
32	G22505140	TUBO 1/4R2 C-F 1/4 L.2350 LM	PIPE 1/4R1 C-F 1/4 L.2350 LM	TUBE 1/4R1 C-F 1/4 L. 2350 LM	ROHR 1/4R1 C-F 1/4 L.2350 LM	TUBO 1/4R1 C-F 1/4 L.2350 LM
33	F03151226	REGOL.DI FLUSSO VRF 1/4' GAS	1/4' GAS VALVE VRF	SOUPAPE REG DEBIT VRF 1/4" GAZ	VENITL VRF 1/4' GAS	VæLVULA VRF 1/4' GAS
34	G15317283	ASS.SUPPORTO DISCO SEGNAFILE				
35	G16610430	FONDELLO ZN.				
36	F04010156	CUSC.d20 D47 B14 6204 2RSH				
37	G18801270	BOCCOLA 21 X25 X12 ZN	BUSHING 21 X 25 X 12 ZN	BOITE 21 X25 X12 ZN	BsCHSE 21 X25 X12 ZN	CASQUILLO 21 X25 X12 ZN
38	G16610160	SUPP.CUSCINETTI DISCO SEGN.ZN.	GALVAN. ROWMAKER DISK BEARING	SUPPORT ROULEMENTS DISQUE TRAC	SCHEIBENLAGERHALTERUNG	SOPORTE COJINETE DE DISCO MARC
39	F03010576	ANELLO OR 50,52X1,78 NBR	GASKET OR 033 DOWTY	BAGUE OR 033 DOWTY	RING OR 033 DOWTY	ANILLO OR 033 DOWTY
40	G16072590	DISCO SEGNAFILE D.350	ROW MARKER DISK D.350	DISQUE TRACEUR D350	SPURREISSERSCHEIBE D. 350	DISCO MARCARDOR DE FILAS O 350
41	G16610190	CHIUSURA CUSCINETTO ZN	GALVAN. BEARING CLOSURE	FERMETURE ROULEMENT ZN	LAGERVERSCHLUSS ZN	CIERRE COJINETE ZN
42	F01230098	DADO M18X 2,5 D982 8 ZN	NUT M18X 2,5 D982 8 ZB	ECRO.M18X 2,5 D982 8 ZB	MUTT.M18X 2,5 D982 8 ZB	TUER.M18X 2,5 D982 8 ZB
43	F01060040	BUL.M 8X1,25X 20 U5732 4.6 ZG	BOLT 8 X20 5732 4.6 GALVANIZED	VIS 8 X20 5732 4.6 ZN	SCHRAUBE 8 X20 5732 4.6 ZN	TORNILLO 8 X20 5732 4.6 ZN
44	F02050370	ANELLO E. DI 47X1,75 U7437 C70	SEEGER RING 47X 1,75 U7437 C70	SEEGER E. 47X 1,75 U7437 C70	SEEGERING E. 47X1,75 U7437 C70	ANILLO E. 47X 1,75 U7437 C70
45	F01200244	DADO M 8X1,25 U5588 6.8 ZN	NUT M8	ECROU M8	MUTTER M8	DADO M8

TAV. 180

SCATOLA ELETTRICA

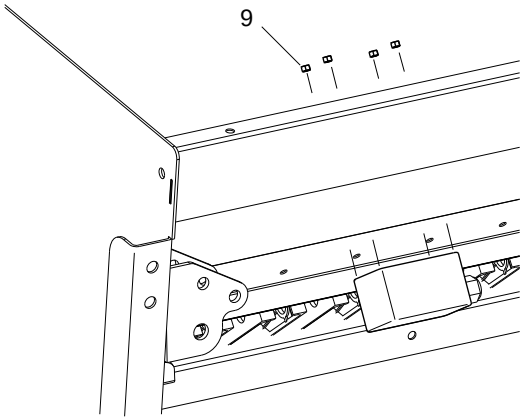

SENSORE S

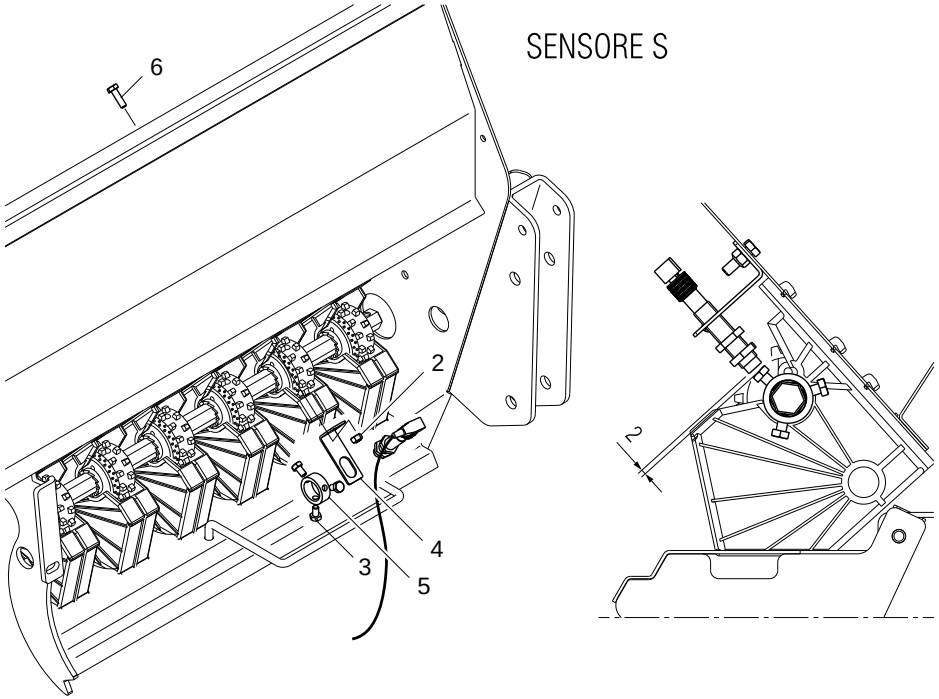

SENSORE H

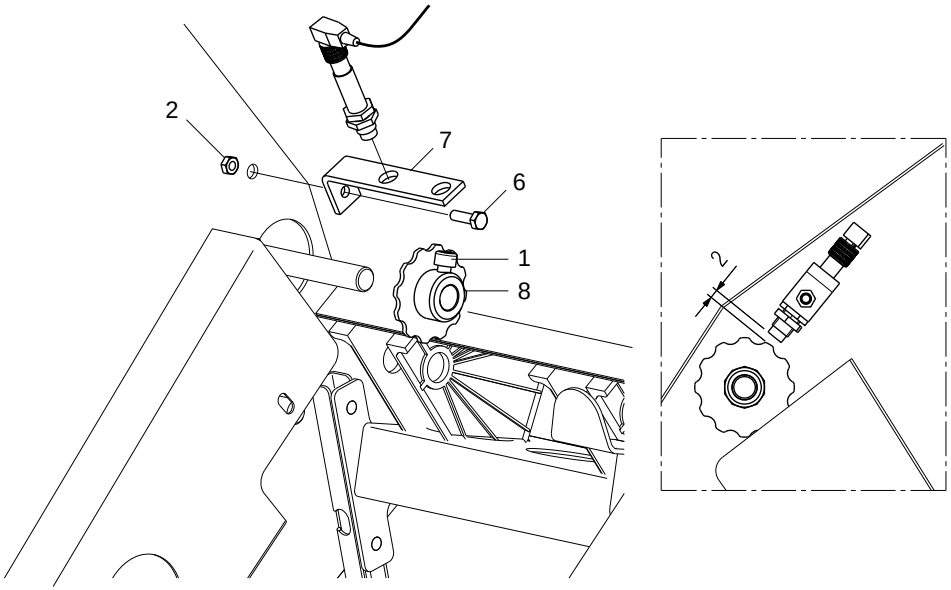

SENSORE N

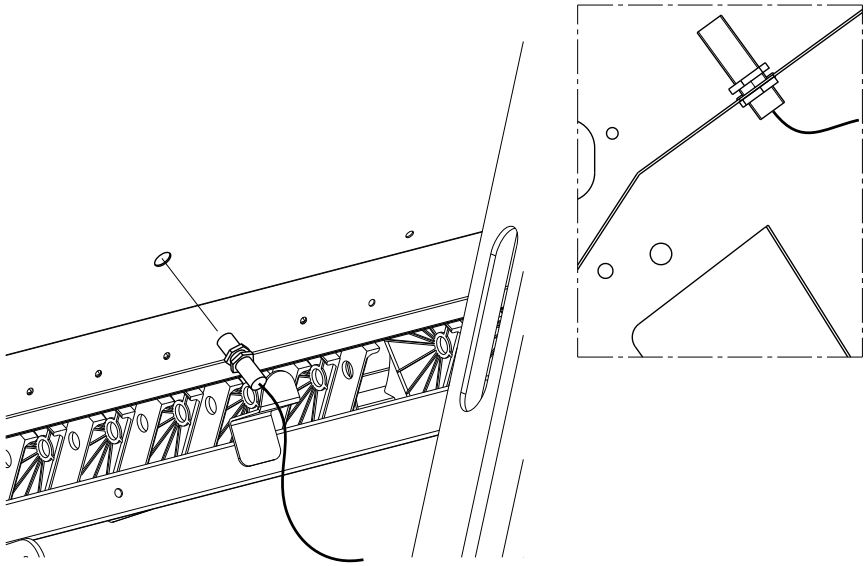

SENSORI DI CONTROLLO

TAV. 180

Pos.	Cod.	Descrizione	Description	Description	Benennung	Descripcion
1	F01040085	VITE M 8X1,25X12 U5931 A2 IX	SCREW M8X1,25X 12 U5931 IX A2	VIS M8X1,25X 12 U5931 IX A2	SCHRAUBE M8X1,25X 12 U5931 IX	TORNIL. M8X1,25X 12 U5931 IX A
2	F01220011	DADO M 6X 1 D980 8 ZN	SELF LOCKING NUT M6	ECROU AUTOBL. M6	SELBSTSPERR.MUTTER M6	DADO AUTOBL. M6
3	F01020397	VITE M 6X 1X 10 U5739 8.8 ZN	BOLT 6X10 5739 8.G GALVANIZED	VIS 6X10 5739 8.G ZN	SCHRAUBE 6X10 5739 8.G ZN	TORNILLO 6X10 5739 8.G ZN
4	G16313990	SUPPORTO SENSORE CAMBIO AL				
5	G16221510	FERMO ASSE DISTRIBUZIONE ZN				
6	F01020404	VITE M 6X 1X20 U5739 8.8 ZN	BOLT 6X20 5739 8.G GALVANIZED	VIS 6X20 5739 8.G ZN	SCHRAUBE 6X20 5739 8.G ZN	TORNILLO 6X20 5739 8.G ZN
7	G07002705	SQUADRETTA SENSORE CONTAETTARI	HA COUNTER SENSOR BRACKET	EQUERRE CAPTEUR COMPT. HECT. W	INKEL HEKTARZZHLERSENSOR E	SCUADRA SENSOR CUENTAHECTæREAC
8	G16061020	CORONA Z.12				
9	F01220200	DADO M 5X 0,8 D980 8 ZN	NUT TRISTOP M 5	ECROU TRISTOP M 5	MUTTER TRISTOP M 5	TUERCA TRISTOP M 5

TAV. 191

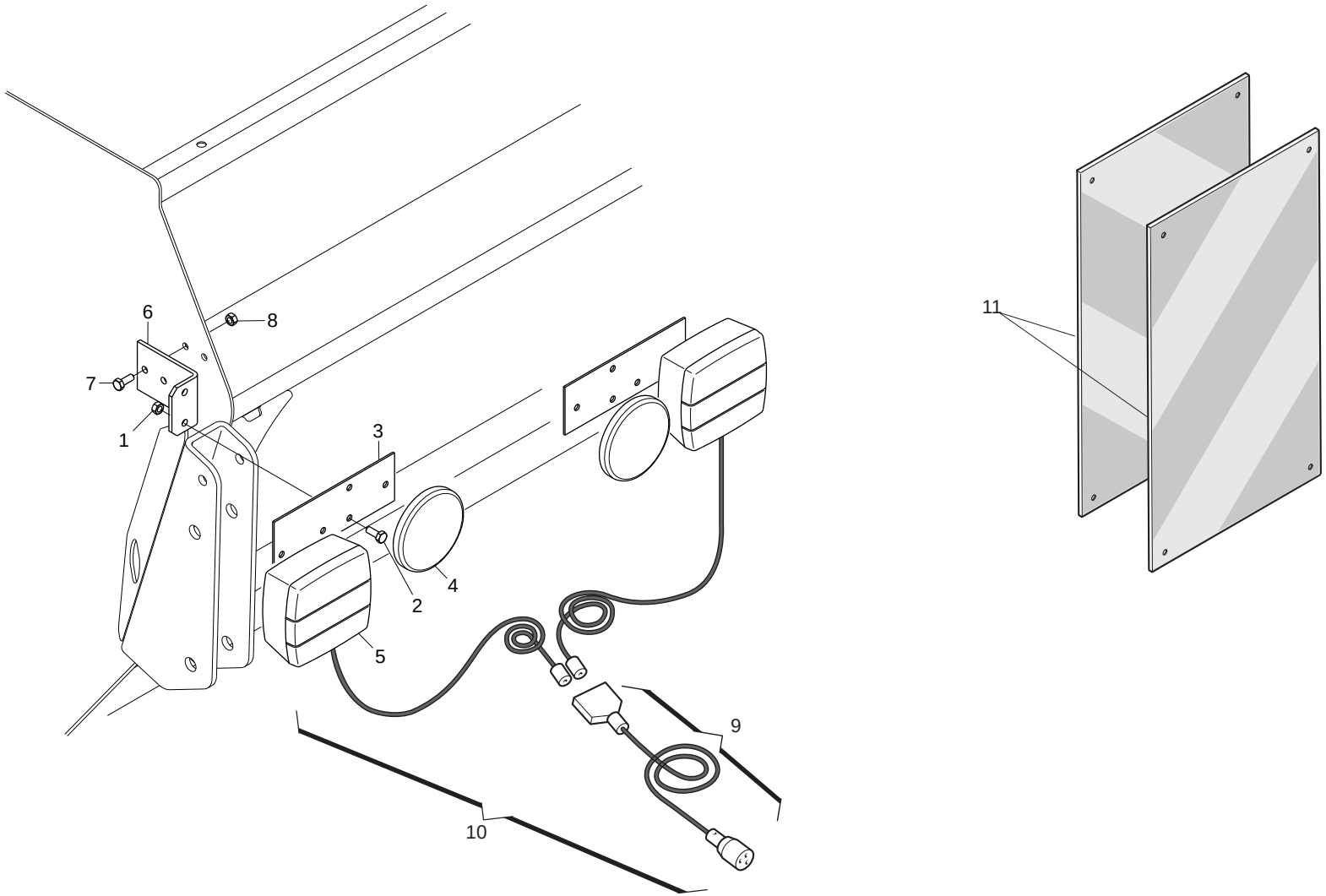

GASPARDO

KIT LUCI E TABELLE D'INGOMBRO

TAV. 191

Pos.	Cod.	Descrizione	Description	Description	Benennung	Descripcion
1	F01220022	DADO M 8X1,25 D980 8 ZN	SELF LOCKING NUT M8X1,25 980V	ECROU AUTOBL. M8X1,25 980-V	SELBSTSP.MUTT. M8X1,25 980-V	DADO AUTOBL. M8X1,25 980-V
2	F01020432	VITE M 8X1,25X16 U5739 8.8 ZN	BOLT M 8X16	VIS M 8X16	SCHRAUBE M 8X16	TORNILLO M 8X16
3	G13616570	PIASTRA SUPP.LUCI	LIGHTS SUPPORT PLATE	PLAQUE DE SUPPORT ECLAIRAGE	LICHTERHALTERUNGSPLATTE	PLACA SOPORTE LUCES
4	F05010221	CATARIFRANGENTE TONDO D.80 >	D.80 ROUND REFLECTOR	CATADIOPTRE ROND D.80	RUNDER R_CKSTRAHLER D.80	PAPEL REFRACTARIO REDONDO D.80
5	F05010076	FANALE X KIT LUCI	LAMP KIT LIGHTS COMPL.	FEU KIT ECLAIRAGE COMPL.	LAMPEN KIT LICHT KOMPL.	FAROL SET LUCES COMPL.
6	G16211010	SUPPORTO FANALI M	LAMP SUPPORT	SUPPORT LUMIERES	BELEUCHTUNGSHALTER	SOPORTE LUCES
7	F01020403	VITE M 6X 1X 16 U5739 8.8 ZN	BOLT M 6X16	VIS M 6X16	SCHRAUBE M 6X16	TORNILLO M 6X16
8	F01220011	DADO M 6X 1 D980 8 ZN	SELF LOCKING NUT M6	ECROU AUTOBL. M6	SELBSTSPERR.MUTTER M6	DADO AUTOBL. M6
9	F05010080	CABLAGGIO PER KIT LUCI	LIGHT WIRING HARNESS	CABLAGE KIT PHARES	VERKABELUNG LAMPENKIT	CABLEADO JUEGO LUCES
10	G13616620	KIT LUCI PER MACCHINE PORTATE	LIGHT KIT FOR MOUNTED MACHINE	KIT FEUX POUR MACHINES PORT+ES	KIT LICHTER F_R FÍRDERMASCHINE	KIT LUCES PARA M-QUINAS SUSPEN
11	F05010357	N.2 PANNELLI CARICHI SPORGENTI	N[JUTTING LOAD PANELS	N. 2 PANNEAUX CHARGES SAILLANT	N.2 TAFELN VORSPRINGENDE LADUN	2 PANELES CARGADOS SALIENTES

USATE SEMPRE RICAMBI ORIGINALI
ALWAYS USE ORIGINAL SPARE PARTS
IMMER DIE ORIGINAL-ERSATZTEILE VERWENDEN
*EMPLOYEZ TOUJOURS LES PIECES DE RECHANGE ORI*GINALES
UTILIZAR SIEMPRE REPUESTOS ORIGINALES

GASPARDO

Servizio Assistenza Tecnica - After Sales Service
Servizio Ricambi - Spare Parts Service
+39 0434 695410

Agip

DEALER:

G19530853

G19530853

MASCHIO GASPARDO

MASCHIO GASPARDO SpA
Sede legale e stabilimento produttivo
Via Marcello, 73 - 35011 Campodarsego (Padova) - Italy
Tel. +39 049 9289810
Fax +39 049 9289900
Email: info@maschio.com
www.maschionet.com

MASCHIO DEUTSCHLAND GMBH
Äußere Nürmberger Straße 5
D - 91177 Thalmässing
Deutschland
Tel. +49 (0) 9173 79000
Fax +49 (0) 9173 790079

MASCHIO FRANCE Sarl
1, Rue de Mérignan ZA
F - 45240 La Ferte St. Aubin
France
Tel. +33 (0) 2.38.64.12.12
Fax +33 (0) 2.38.64.66.79

MASCHIO IBERICA S.L.
Calle Cabernet, 10
Poligono Industrial Clot de Moja
Olerdola - 08734 Barcelona
Tel. +34 93.81.99.058
Fax +34 93.81.99.059

MASCHIO-GASPARDO USA Inc
120 North Scott Park Road
Eldridge, IA 52748 - USA
Ph. +1 563 2859937
Fax +1 563 2859938
e-mail: info@maschio.us

MASCHIO GASPARDO SpA
Stabilimento produttivo
Via Mussons, 7 - 33075
Morsano al Tagliamento (PN) - Italy
Tel. +39 0434 695410
Fax +39 0434 695425
Email: info@gaspardo.it

000 МАСКИО-ГАСПАРДО РУССИЯ
Улица Пушкина, 117 Б
404126 Волжский
Волгоградская область
Тел. +7 8443 525065
факс. +7 8443 525064

MASCHIO-GASPARDO ROMANIA S.R.L.
Strada Înfrátirii, F.N.
315100 Chisineu-Cris (Arad) -România
Tel. +40 257 307030
Fax +40 257 307040
e-mail: maschio@maschio.ro

MASCHIO MIDDLE EAST
P.O. Box 922388
Amman, 11192 Jordan
Tel. 962 605511384
Fax 962 6 5538398
e-mail: tahaeng@nets.com.jo

GASPARDO-MASCHIO TURCHIA
MASCHIO-GASPARDO CANADA Inc
MASCHIO-GASPARDO CINA
MASCHIO-GASPARDO POLAND
MASCHIO-GASPARDO UCRAINA
GASPARDO BIELORUSSIA
MASCHIO-GASPARDO KOREA