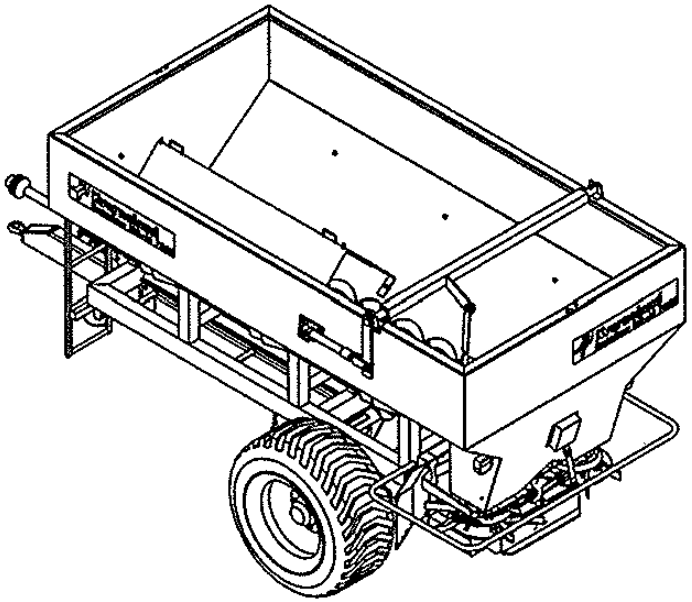

PENTON-RS-M

Spare Parts Manual

Article number:	VN70010006
Language:	EN
Production year (from):	2010
Prod. Series nr (from):	VN22000
01001 < Mach. ID <=	

PENTON-RS-M / Table of Contents

PosNo.	Assembly group	Page
1	FRAME (PENTON)	1
1	FRAME (PENTON)	2
1	FRAME (PENTON)	3
2	AUGER & TRANSMISSION	4
2	AUGER & TRANSMISSION	5
2	AUGER & TRANSMISSION	6
2	AUGER & TRANSMISSION	7
2	AUGER & TRANSMISSION	8
4	HOPPER	9
4	HOPPER	10
5	HYDRAULICS (PENTON)	11
5	HYDRAULICS (PENTON)	12
5	HYDRAULICS (PENTON)	13
5	HYDRAULICS (PENTON)	14
5	HYDRAULICS (UNIT)	15
6	LIGHTING	16
8	SHAFT, UNIV. JOINT	17
8	SHAFT, UNIV. JOINT	18
8	SHAFT, UNIV. JOINT	19
8	SHAFT, UNIV. JOINT	20
10	DECAL SCHEMATIC	21
11	FRAME (UNIT)	22
12	DRIVE (UNIT)	23
14	PROTECTION (UNIT)	24
15	DISC, BROADCASTER (UNIT)	25
16	DOSAGE (UNIT)	26
18	CONTROL (UNIT)	27
99	ACCESSORIES	28
99	TARPAULIN	29
99	CALIBRATION CONTAINER	30
99	FEELER GAUGE	31
99	BOUNDARY SPREADING PLATE	32

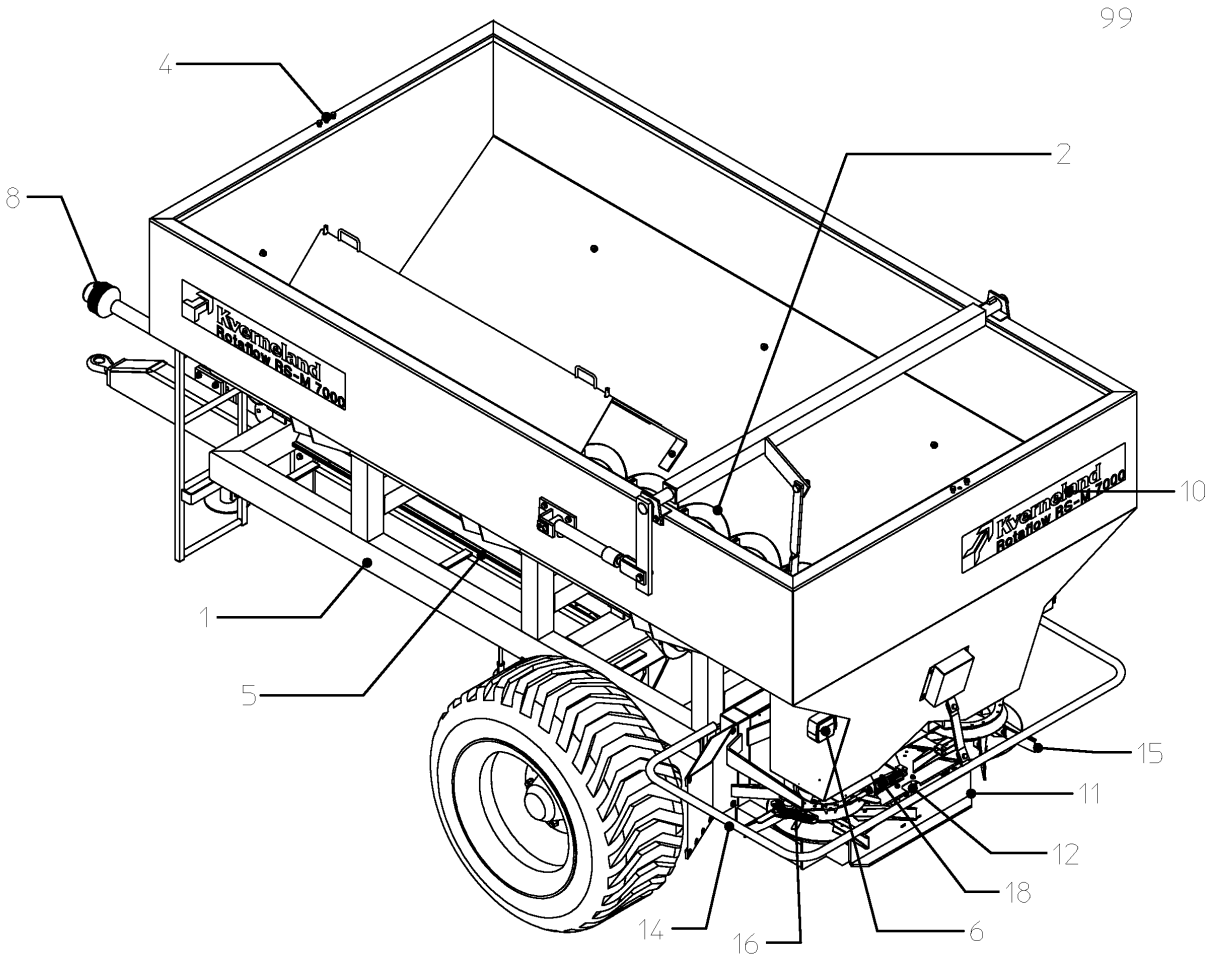

PENTON-RS-M / FRAME (PENTON)

PosNo.	Part No.	Qty.
1	VNB4351886	1
3	KG00500900	1
5	VNB4471202	1
6	VNB4353002	1
7	VNB4353102	1
8	KG01195662	1
9	KG01381100	2
10	VNB4353278	1
11	VNB4353378	1
12	KG00480562	1
13	KG01267762	5
14	VN90070526	1
15	VN90021368	1
16	VN90020550	1
17	KG00363962	1
18	KG01072662	2
19	KG00654500	1
20	KG01070000	1
21	VN90036164	1
22	VNB4352886	1
23	KG00480262	1
24	KG01264100	1
25		3
26	VNB4471578	1
27	VNB4471878	1
38	KG01264000	1
39	KG00495500	6
40	VN31903208	3
41	VN31903212	3

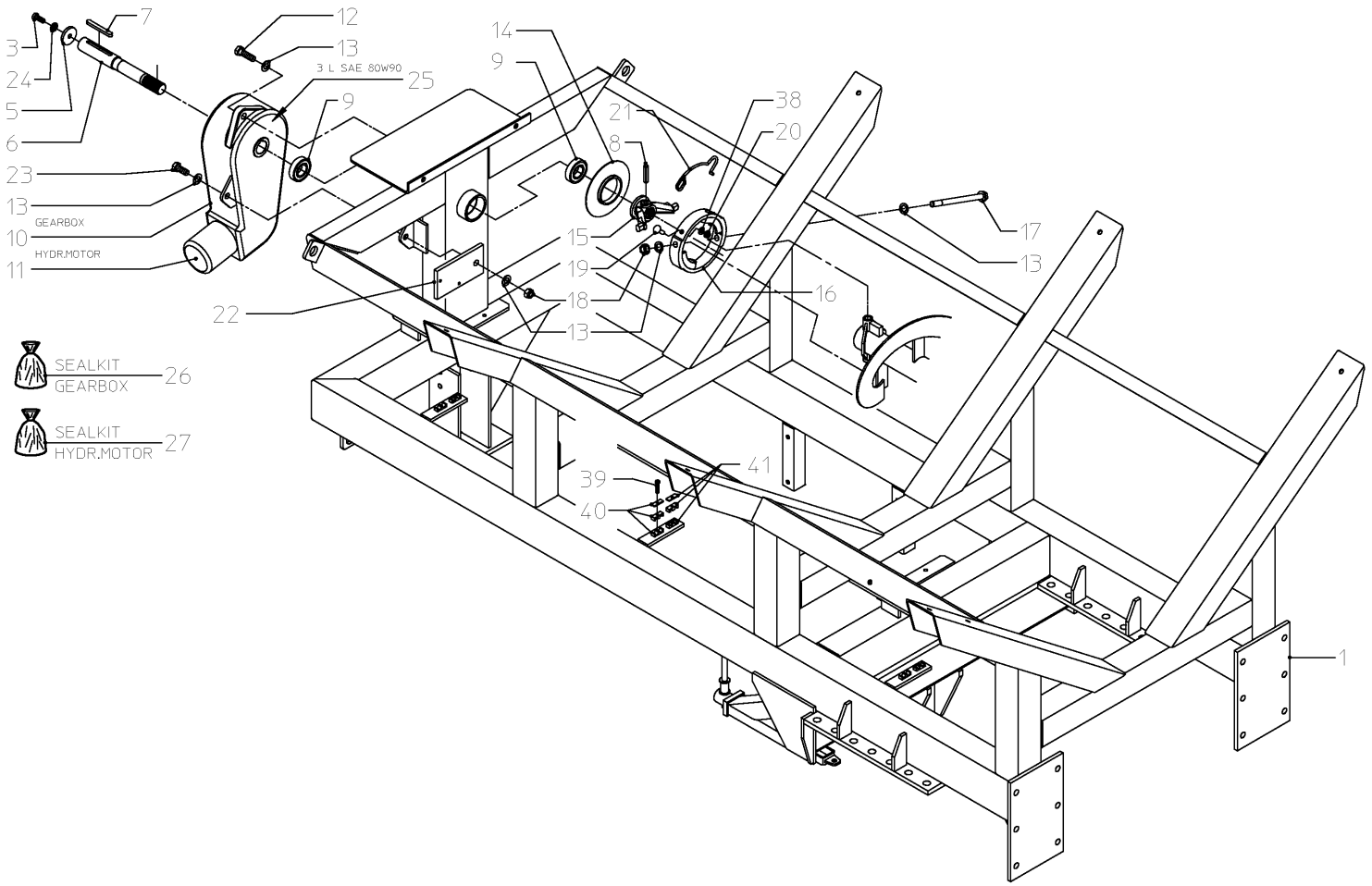

KV_PENTON_VN22000_K01

PENTON-RS-M / FRAME (PENTON)

PosNo.	Part No.	Qty.
4	KG01070100	2
20	KG01070000	2
24	KG01264100	4
28	VNB4352086	1
29	VNB4352193	1
30	KG01255261	1
31	KG00483862	1
34	VNB4352702	1
35	VN40724307	1
36	VN41701200	1
37	KG00397700	2
38	KG01264000	2
39	VNB1641978	1
40	VNB4352378	1
41	KG00399600	2
44	VN46120100	1
53	KG01052562	1

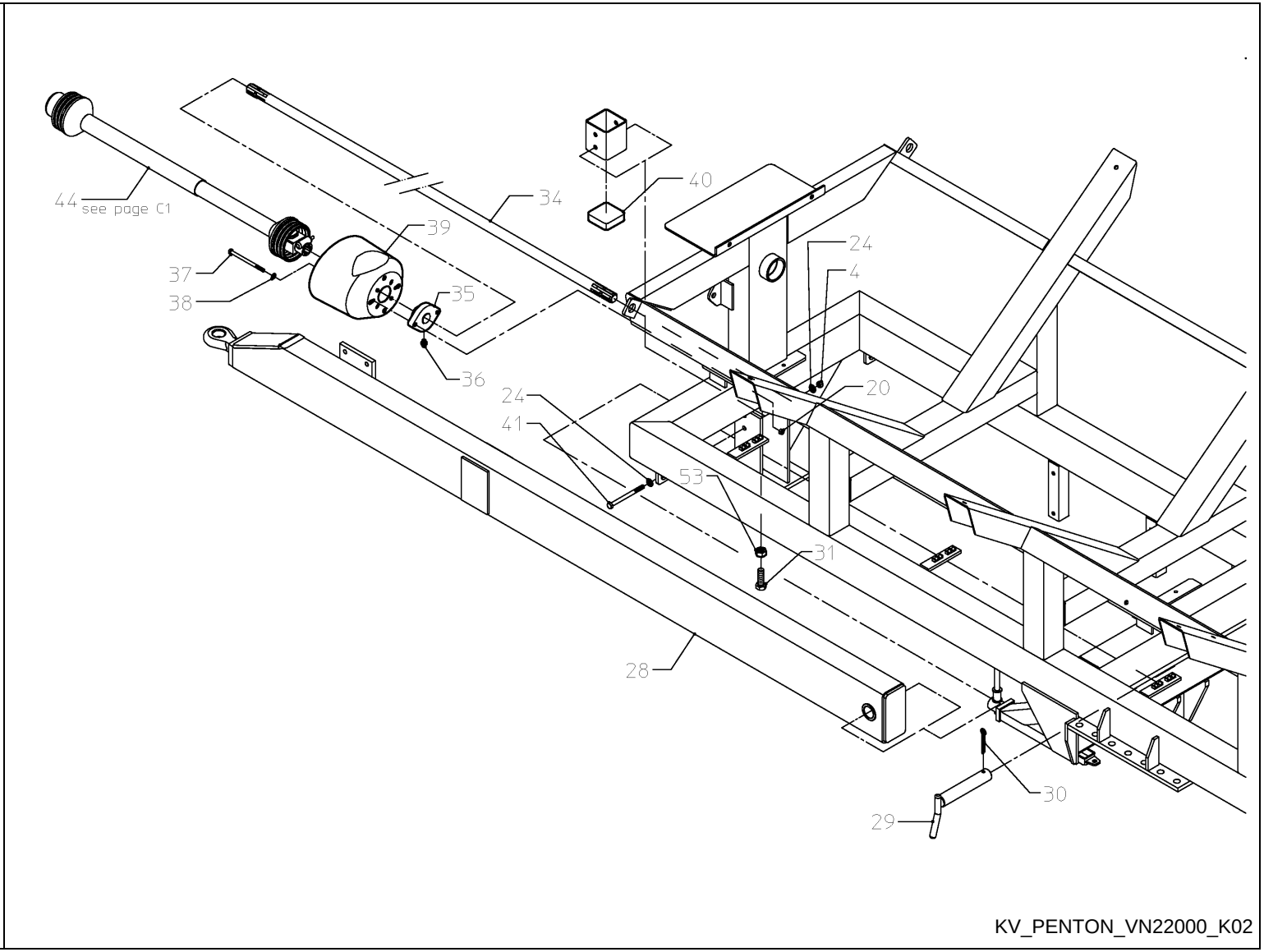

PENTON-RS-M / FRAME (PENTON)

PosNo.	Part No.	Qty.
20	KG01070000	7
35	VN40724307	1
36	VN41701200	1
37	KG00397700	2
38	KG01264000	10
39	VNB1641978	1
45	VNB4352594	1
46	VNB4352694	1
47	KG00498700	4
48	KG00496800	6
49	KG01069900	6
54	KG01263900	12
58	VNB4471486	1
59	KG01053900	1
60	VNB4471393	1
61	KG00397200	1
62	VN46120092	1

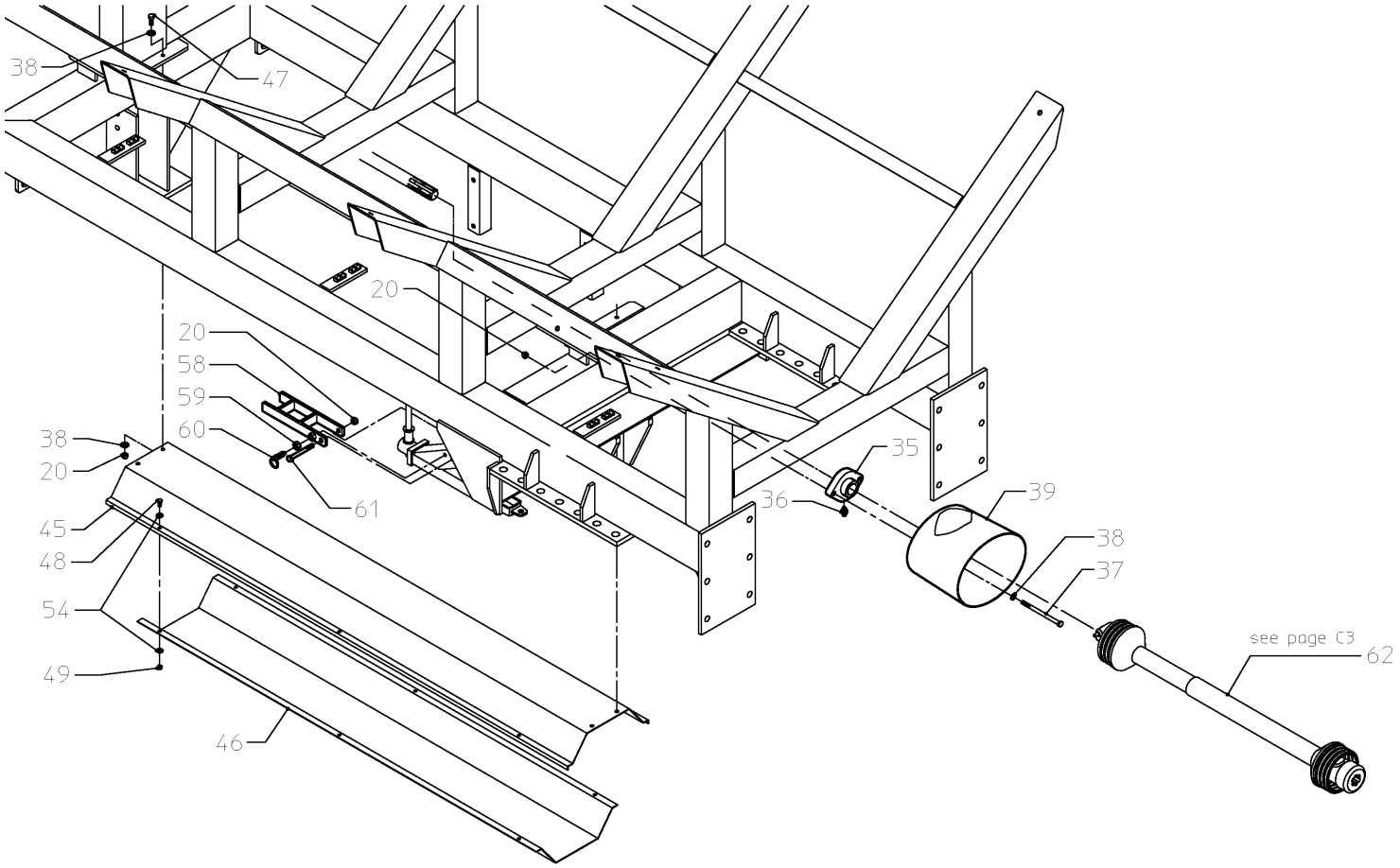

KV_PENTON_VN22000_K03

PENTON-RS-M / AUGER & TRANSMISSION

PosNo.	Part No.	Qty.
1	VNB4351886	1
3	KG00500900	1
5	VNB4471202	1
6	VNB4353002	1
7	VNB4353102	1
8	KG01195662	1
9	KG01381100	2
10	VNB4353278	1
11	VNB4353378	1
12	KG00480562	1
13	KG01267762	5
14	VN90070526	1
15	VN90021368	1
16	VN90020550	1
17	KG00363962	1
18	KG01072662	2
19	KG00654500	1
20	KG01070000	1
21	VN90036164	1
22	VNB4352886	1
23	KG00480262	1
24	KG01264100	1
25		3
26	VNB4471578	1
27	VNB4471878	1
38	KG01264000	1
39	KG00495500	6
40	VN31903208	3
41	VN31903212	3

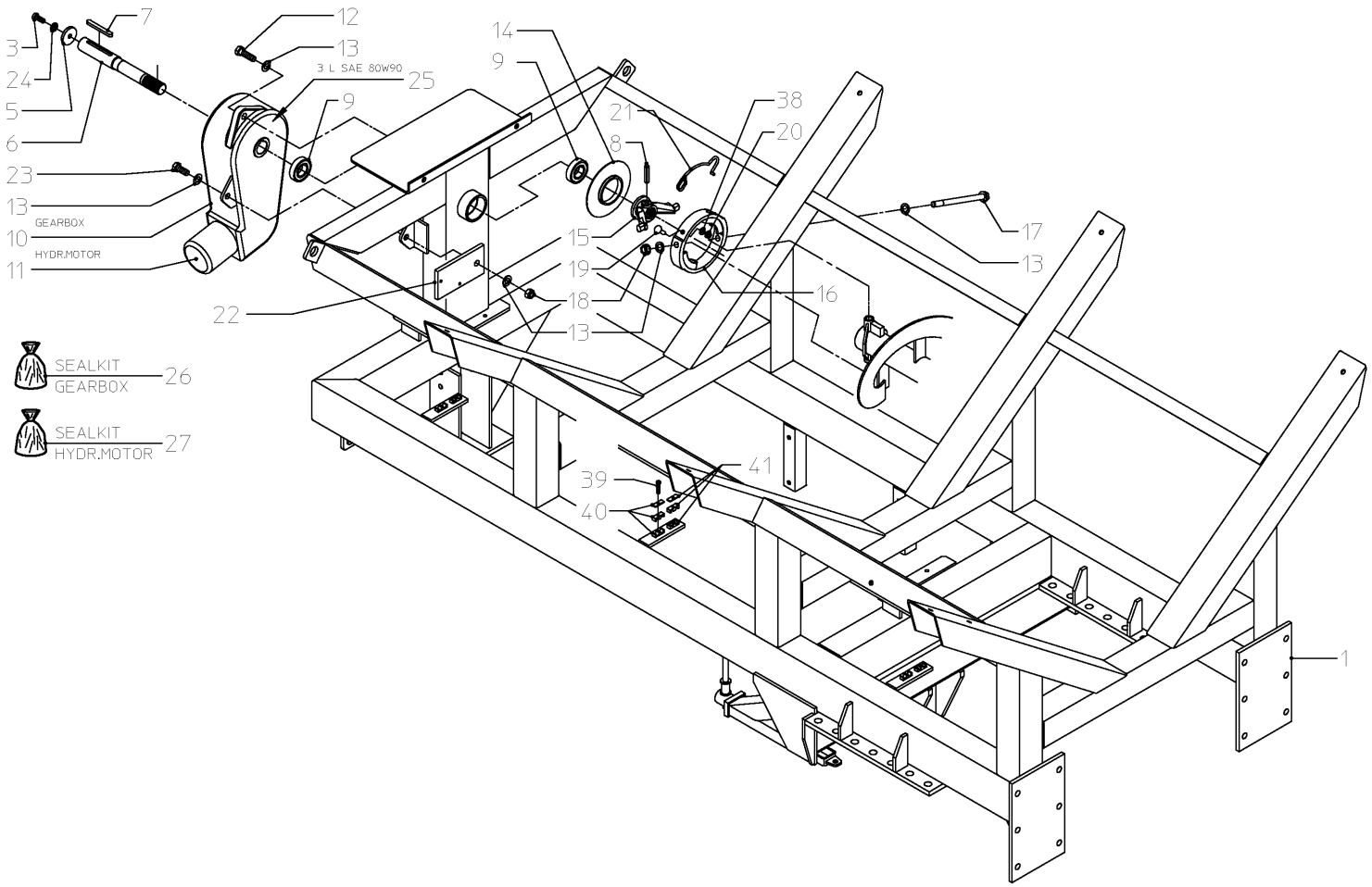

KV_PENTON_VN22000_K01

PENTON-RS-M / AUGER & TRANSMISSION

PosNo.	Part No.	Qty.
4	KG01070100	2
20	KG01070000	2
24	KG01264100	4
28	VNB4352086	1
29	VNB4352193	1
30	KG01255261	1
31	KG00483862	1
34	VNB4352702	1
35	VN40724307	1
36	VN41701200	1
37	KG00397700	2
38	KG01264000	2
39	VNB1641978	1
40	VNB4352378	1
41	KG00399600	2
44	VN46120100	1
53	KG01052562	1

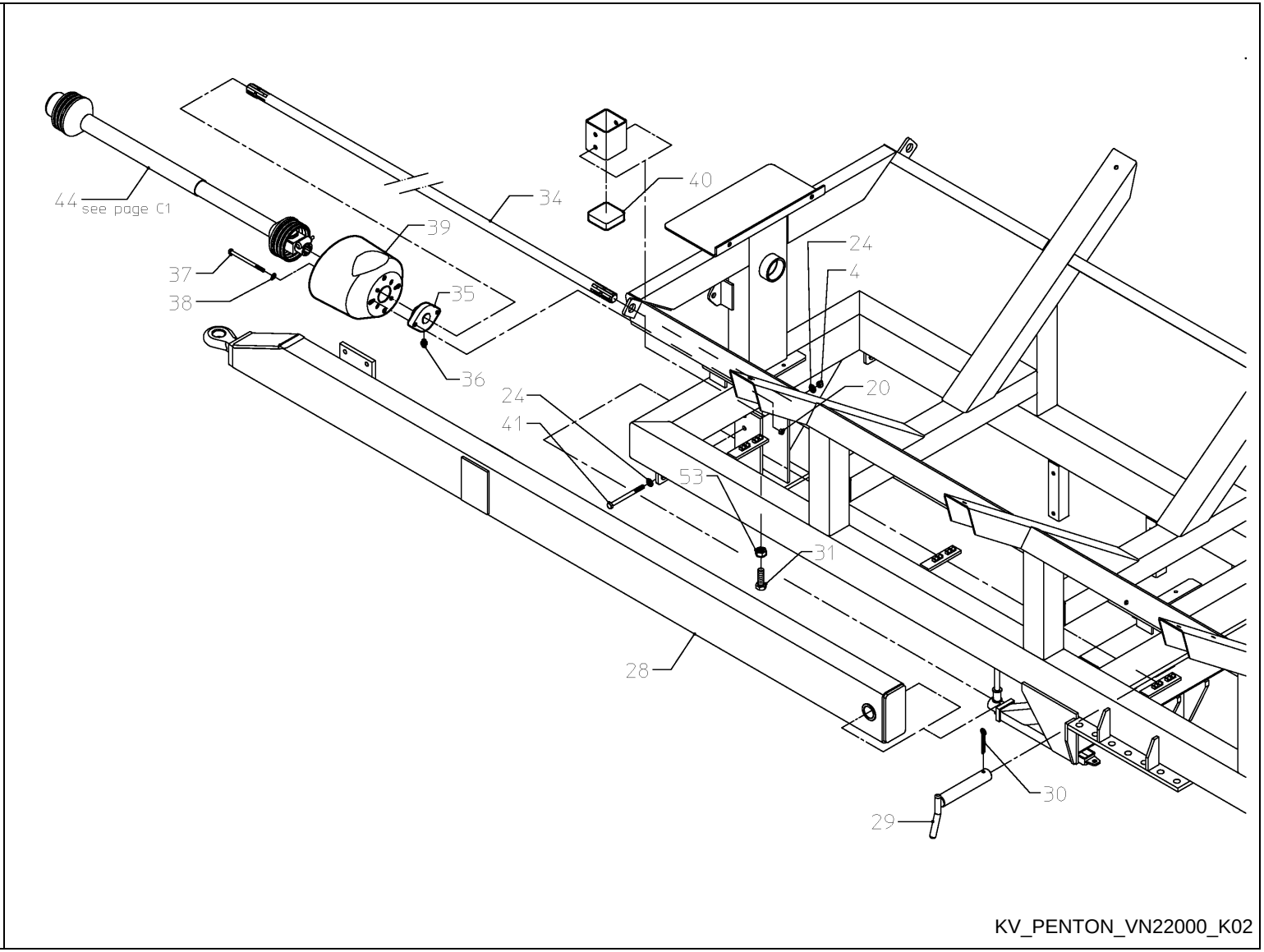

PENTON-RS-M / AUGER & TRANSMISSION

PosNo.	Part No.	Qty.
20	KG01070000	7
35	VN40724307	1
36	VN41701200	1
37	KG00397700	2
38	KG01264000	10
39	VNB1641978	1
45	VNB4352594	1
46	VNB4352694	1
47	KG00498700	4
48	KG00496800	6
49	KG01069900	6
54	KG01263900	12
58	VNB4471486	1
59	KG01053900	1
60	VNB4471393	1
61	KG00397200	1
62	VN46120092	1

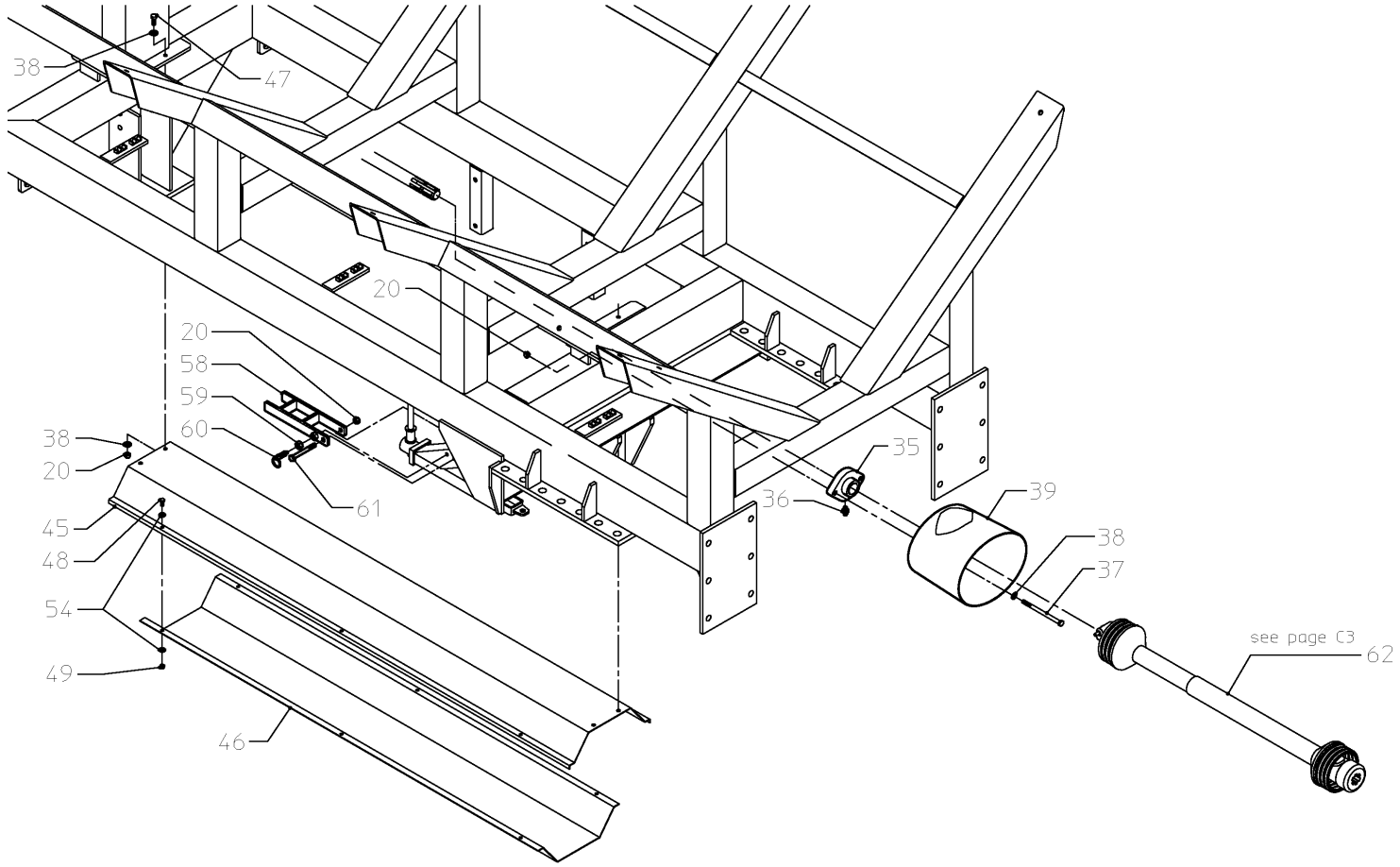

KV_PENTON_VN22000_K03

PENTON-RS-M / AUGER & TRANSMISSION

PosNo.	Part No.	Qty.
3	KG00500900	6
4	KG01070100	12
24	KG01264100	6
32	VNB2068778	4
49	KG01069900	2
56	KG00497100	2
57	KG01901400	4
71	VNB4701194	1
72	VNB4701294	1
74	VNB4354494	1
75	VNB4354386	1

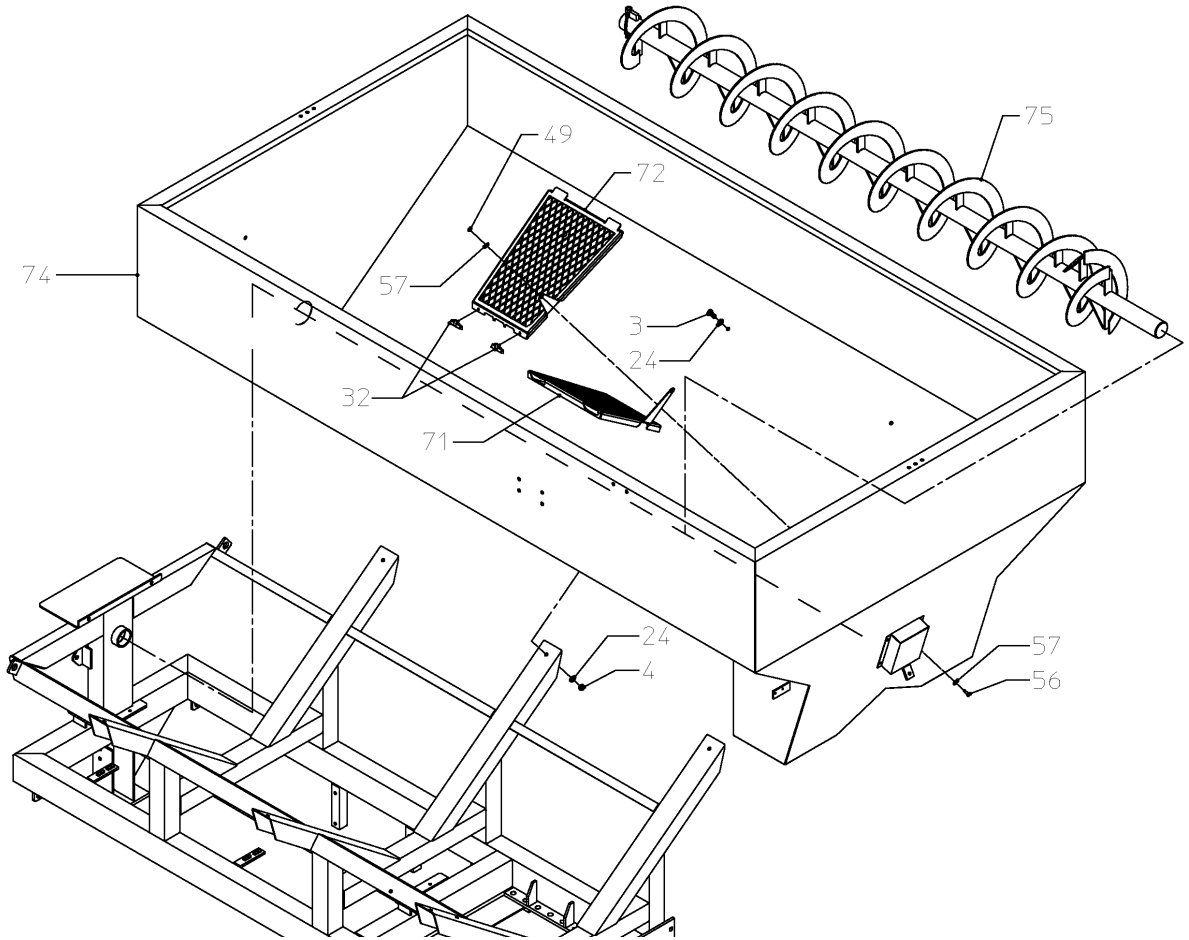

KV_PENTON_VN22000_K05

PENTON-RS-M / AUGER & TRANSMISSION

PosNo.	Part No.	Qty.
4	KG01070100	4
24	KG01264100	8
51	KG01204300	2
52	KG01264500	2
55	VNB4705402	1
69	KG01069800	4
86	KG00501000	4
89	VNB4705194	1
90	VNB4354186	2
91	VNB4354286	1
92	KG01070400	1
93	VNB4355078	1
94	KG00495300	4

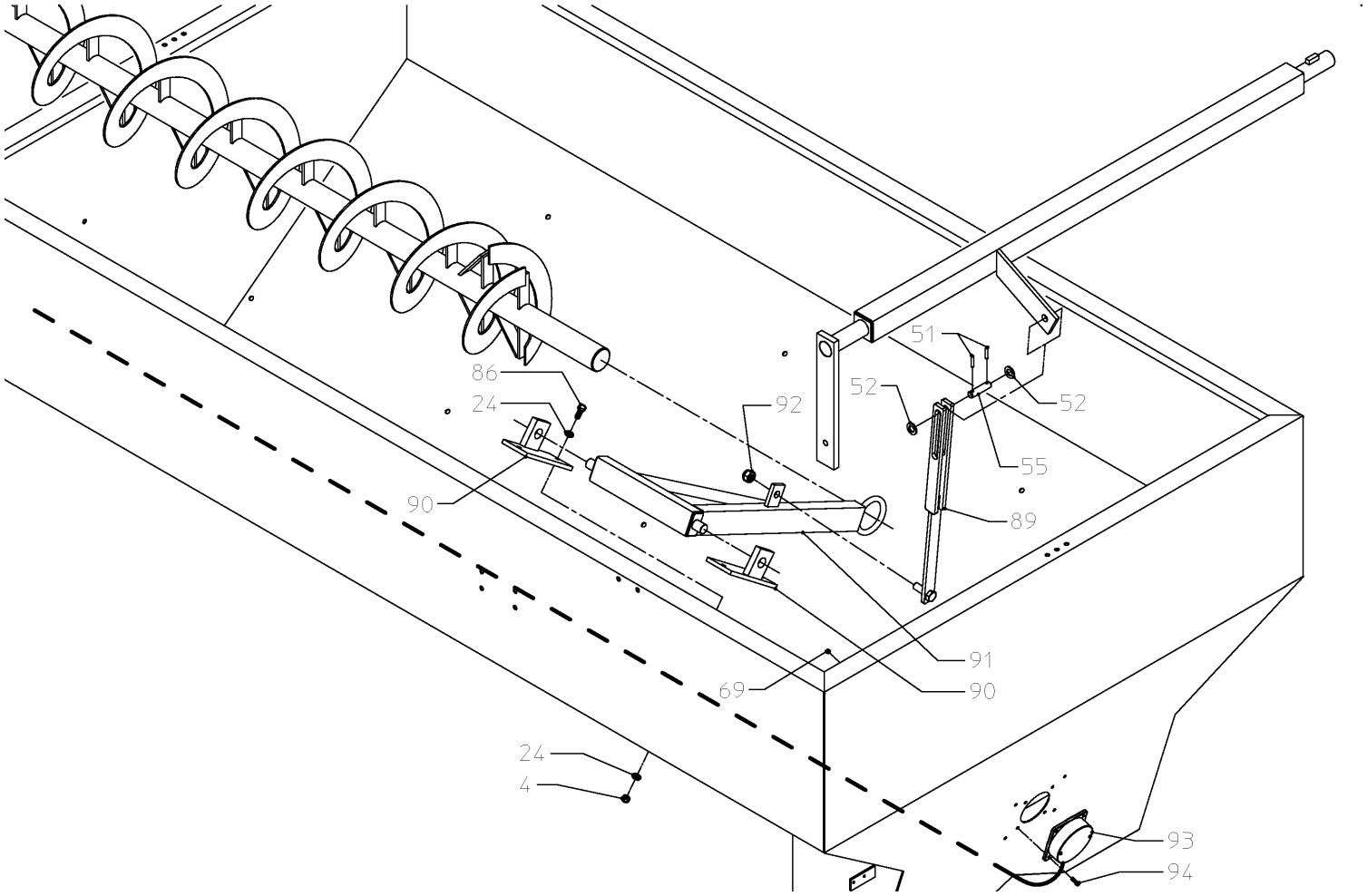

KV_PENTON_VN22000_K08

PENTON-RS-M / HOPPER

PosNo.	Part No.	Qty.
3	KG00500900	6
4	KG01070100	12
24	KG01264100	6
32	VNB2068778	4
49	KG01069900	2
56	KG00497100	2
57	KG01901400	4
71	VNB4701194	1
72	VNB4701294	1
74	VNB4354494	1
75	VNB4354386	1

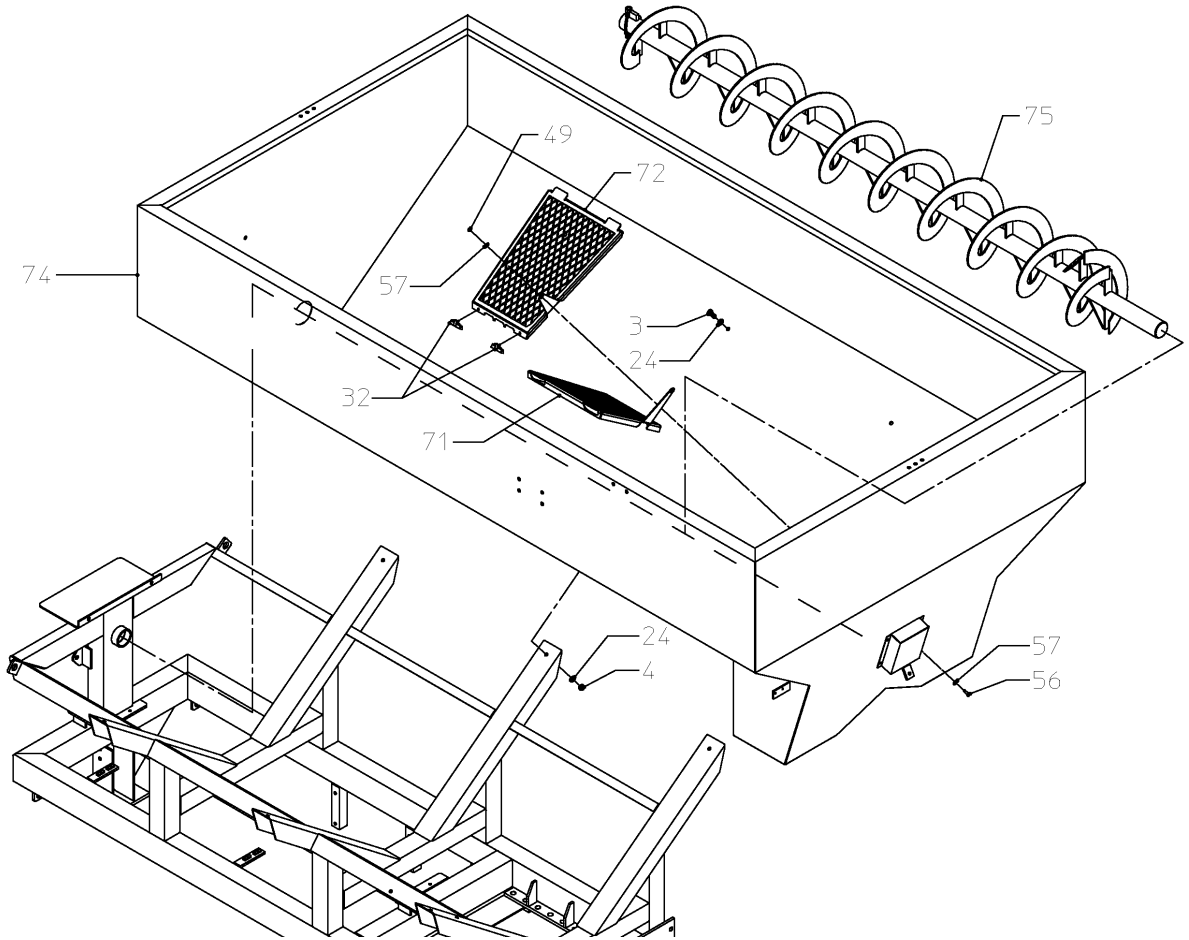

KV_PENTON_VN22000_K05

PENTON-RS-M / HOPPER

PosNo.	Part No.	Qty.
3	KG00500900	6
4	KG01070100	6
24	KG01264100	6
76	VNB4354694	2
77	VNB4354794	1
78	VNB4354886	1
79	VNB0897393	2
97	KG01901600	6

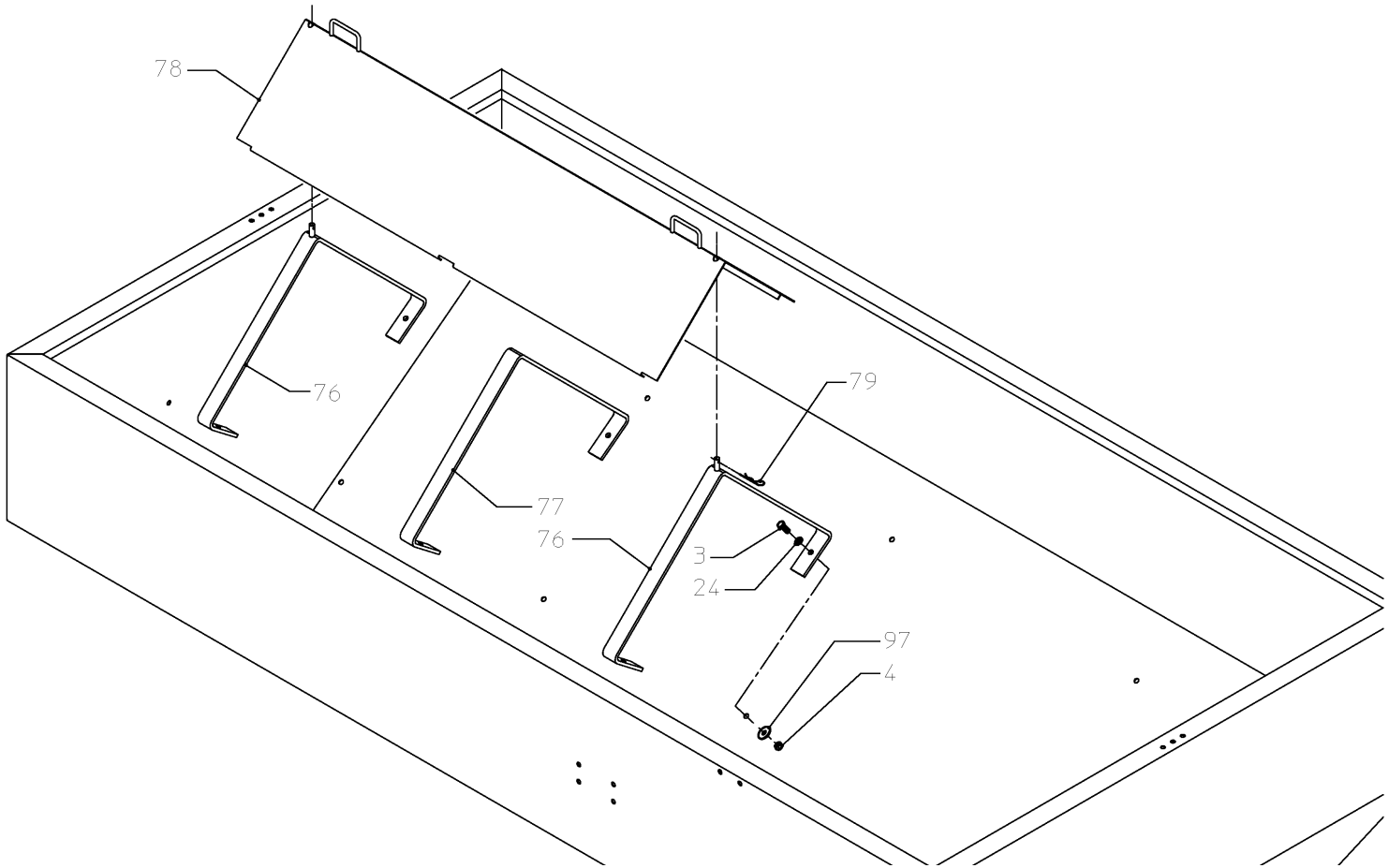

KV_PENTON_VN22000_K06

PENTON-RS-M / HYDRAULICS (PENTON)

PosNo.	Part No.	Qty.
1	VNB4351886	1
3	KG00500900	1
5	VNB4471202	1
6	VNB4353002	1
7	VNB4353102	1
8	KG01195662	1
9	KG01381100	2
10	VNB4353278	1
11	VNB4353378	1
12	KG00480562	1
13	KG01267762	5
14	VN90070526	1
15	VN90021368	1
16	VN90020550	1
17	KG00363962	1
18	KG01072662	2
19	KG00654500	1
20	KG01070000	1
21	VN90036164	1
22	VNB4352886	1
23	KG00480262	1
24	KG01264100	1
25		3
26	VNB4471578	1
27	VNB4471878	1
38	KG01264000	1
39	KG00495500	6
40	VN31903208	3
41	VN31903212	3

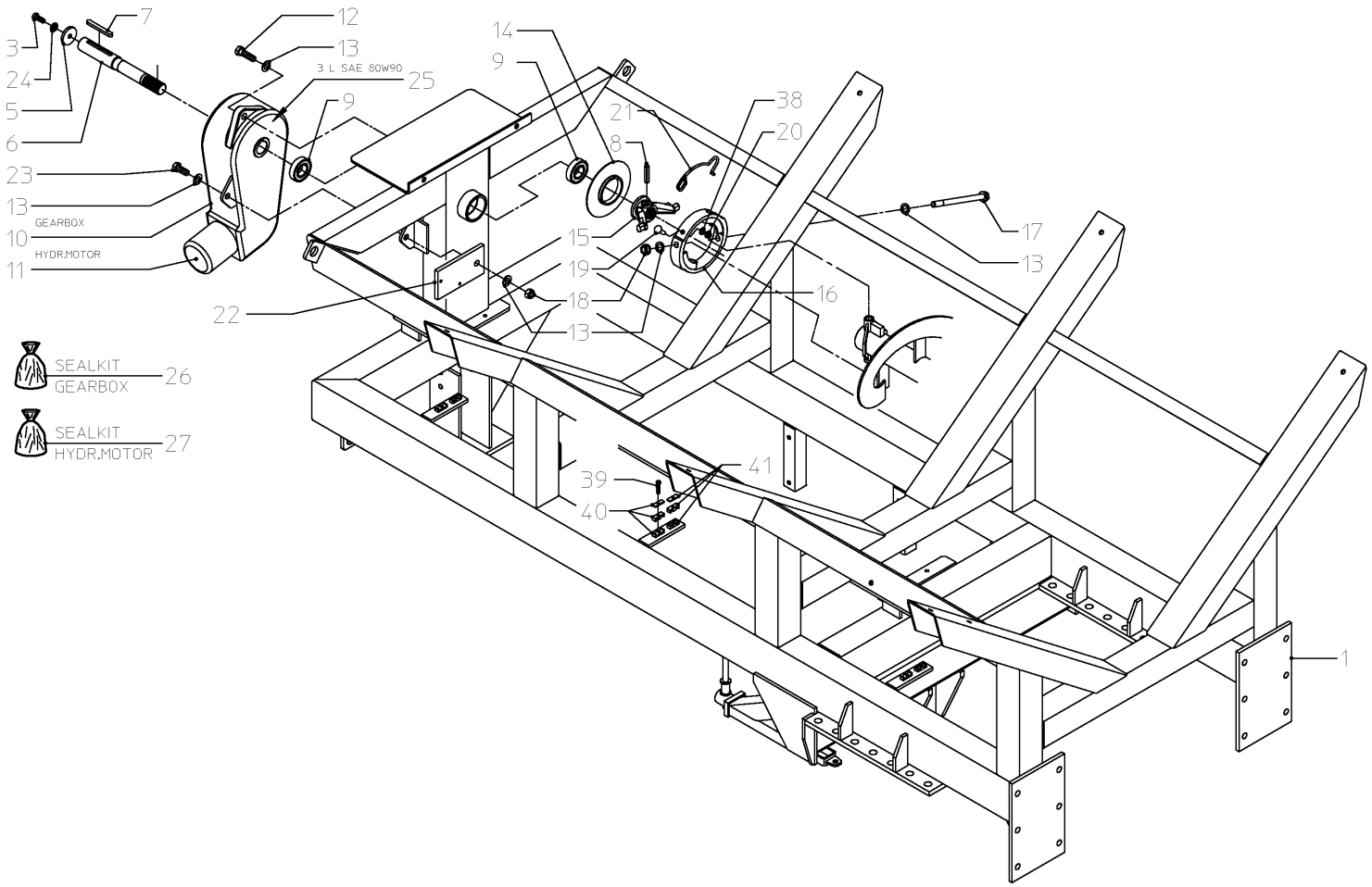

KV_PENTON_VN22000_K01

PENTON-RS-M / HYDRAULICS (PENTON)

PosNo.	Part No.	Qty.
1	VN48523002	4
2	VN48523001	2
4	KG01070100	8
5	VNB3452478	1
6	VNB3452378	1
7	VNB3620578	2
8	VNB1128178	
9	VNB1128078	
13	KG01267762	2
18	KG01072662	1
24	KG01264100	16
48	KG00496800	2
49	KG01069900	3
54	KG01263900	6
80	VNB4353586	2
81	VNB4353686	2
82	VNB4353786	1
83	VNB4353878	1
84	VNB4353986	1
85	VNB4354086	1
86	KG00501000	8
87	KG00496900	1
88	KG00480662	1
95	VN38820159	2
96	VNB4470978	2

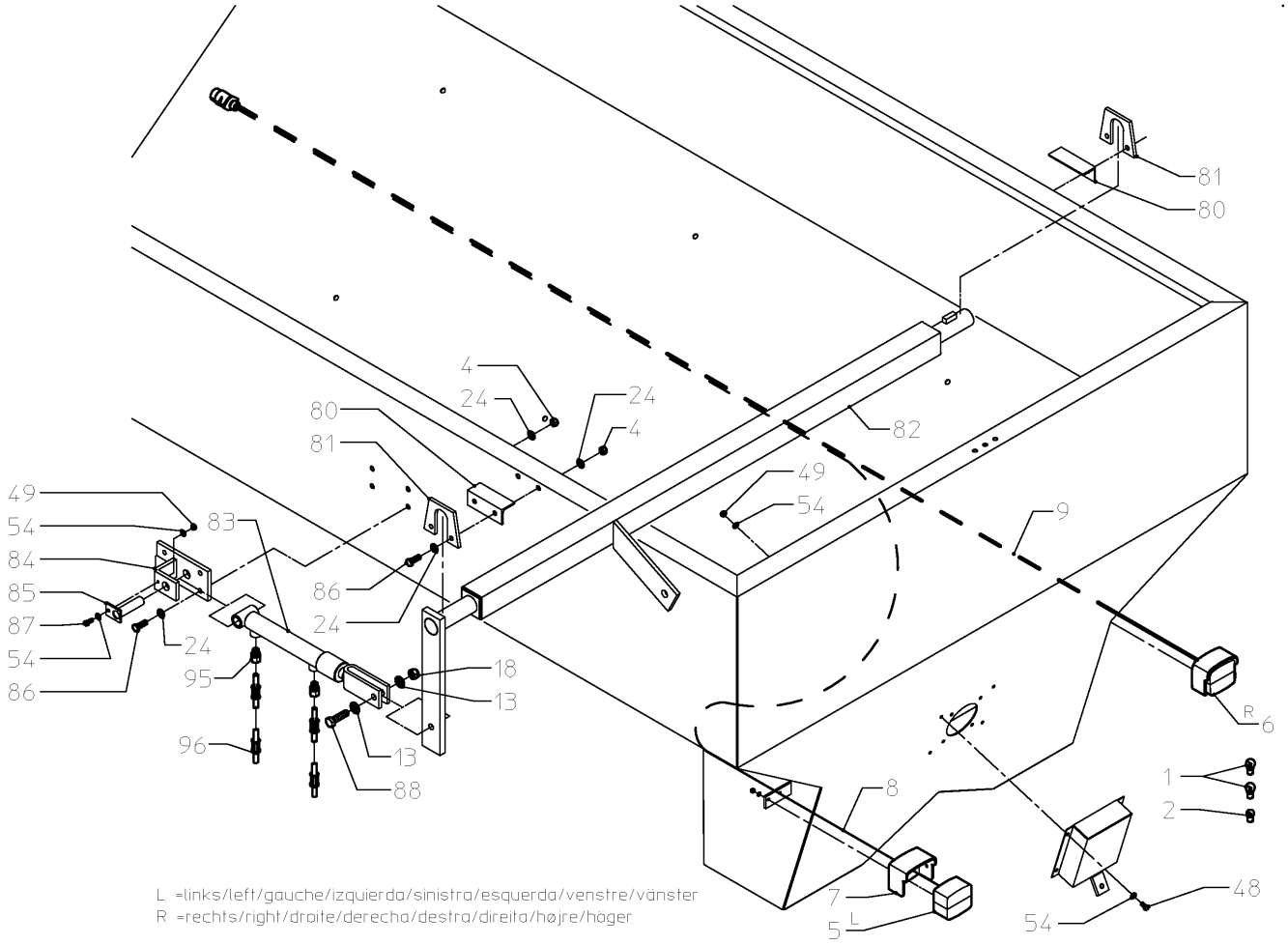

KV_PENTON_VN22000_K07

PENTON-RS-M / HYDRAULICS (PENTON)

PosNo.	Part No.	Qty.
1	VNB4356078	2
2	VNB4356278	2
3	RG00039544	4
4	VN38820167	4

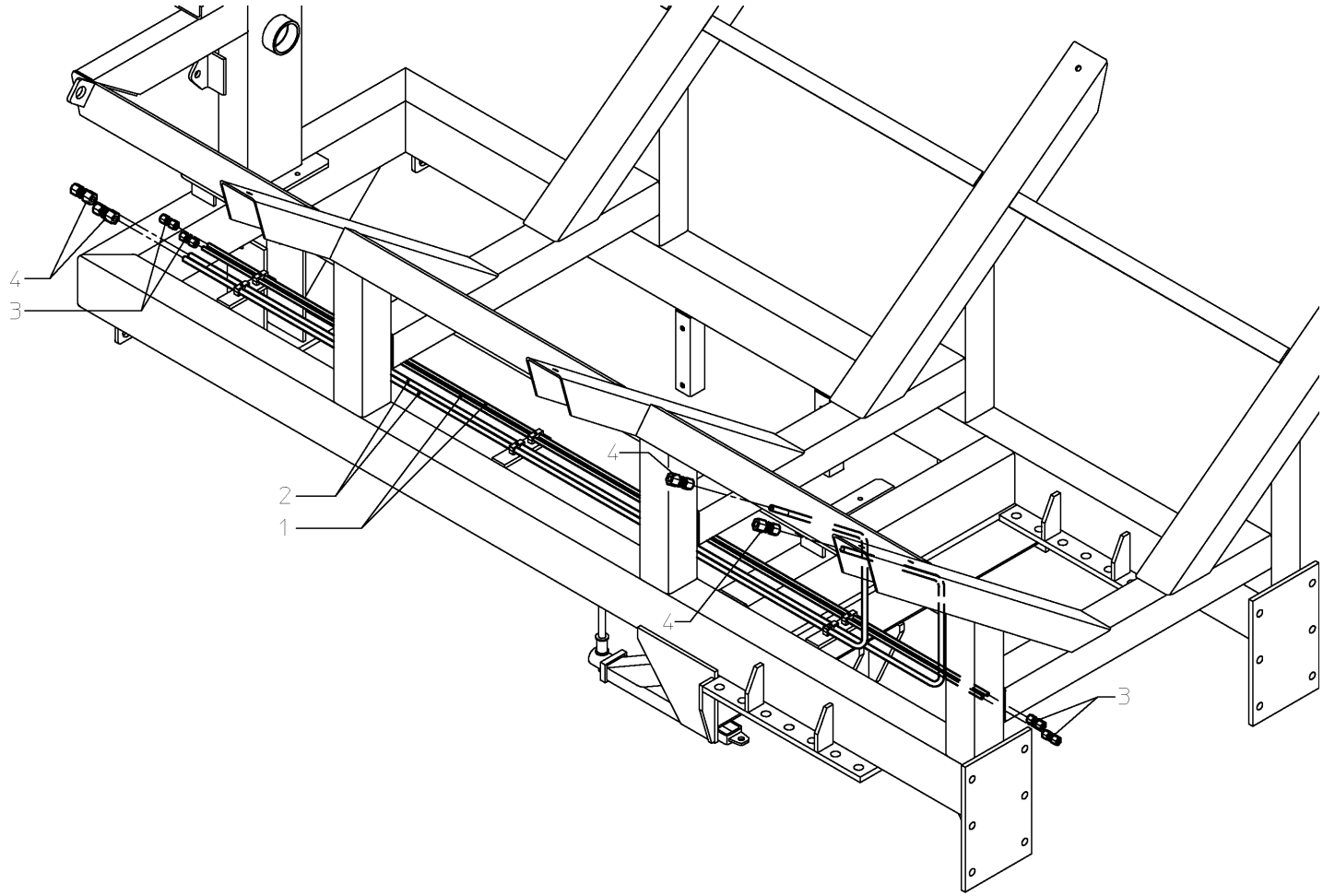

KV_PENTON_VN22000_K13

PENTON-RS-M / HYDRAULICS (PENTON)

PosNo.	Part No.	Qty.
4	VN38820104	4
5	VN38820062	1
6	VNB4471178	1
7	VN38601103	1
8	VN38612656	1
12	VNB4701078	1
13	VNB4355278	1
16	VNB4355378	1
29	KG00393000	2
30	KG01263800	4
31	KG01069800	2

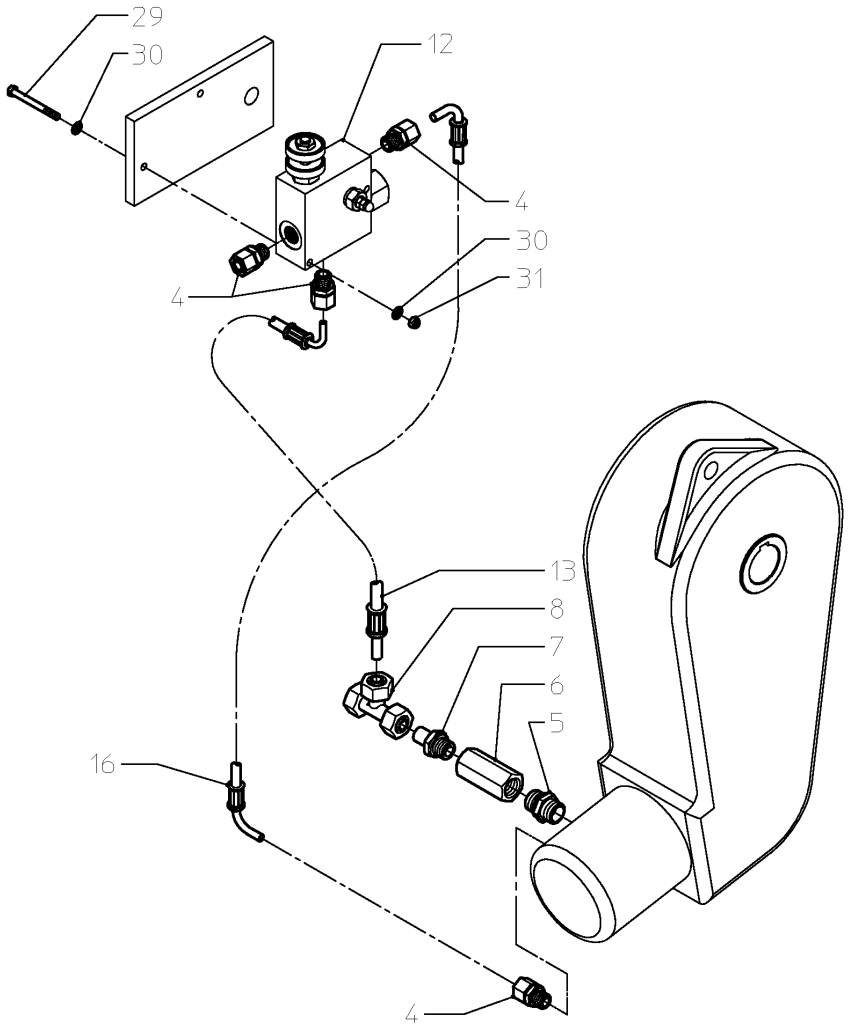

KV_PENTON_VN22000_K14

PENTON-RS-M / HYDRAULICS (UNIT)

PosNo.	Part No.	Qty.
1	VNB2024694	1
2	KG00497100	6
3	KG01263900	10
4	KG01069900	6
5	VNB2024094	1
6	VNB2024194	1
7	VNB0736102	2
8	VN30116090	4
9	VNB4422878	2
10	VNB1773794	2
11	VNB1226902	2
12	KG00495600	2
13	KG01069800	2
14	VNB1761578	2
15	VNB1838978	1
16	VNB1839078	1
17	VNB1632794	1
18	VNB1632694	1
19	KG00654300	4
20	KG01264000	6
21	VN30117100	6
22	KG01053800	8
24	KG01044900	2
25	KG01070000	2
28	VNB4296978	4
29	VNB4297702	2
30	VNB3145278	2
37	VN80504001	4
39	VN90090191	2

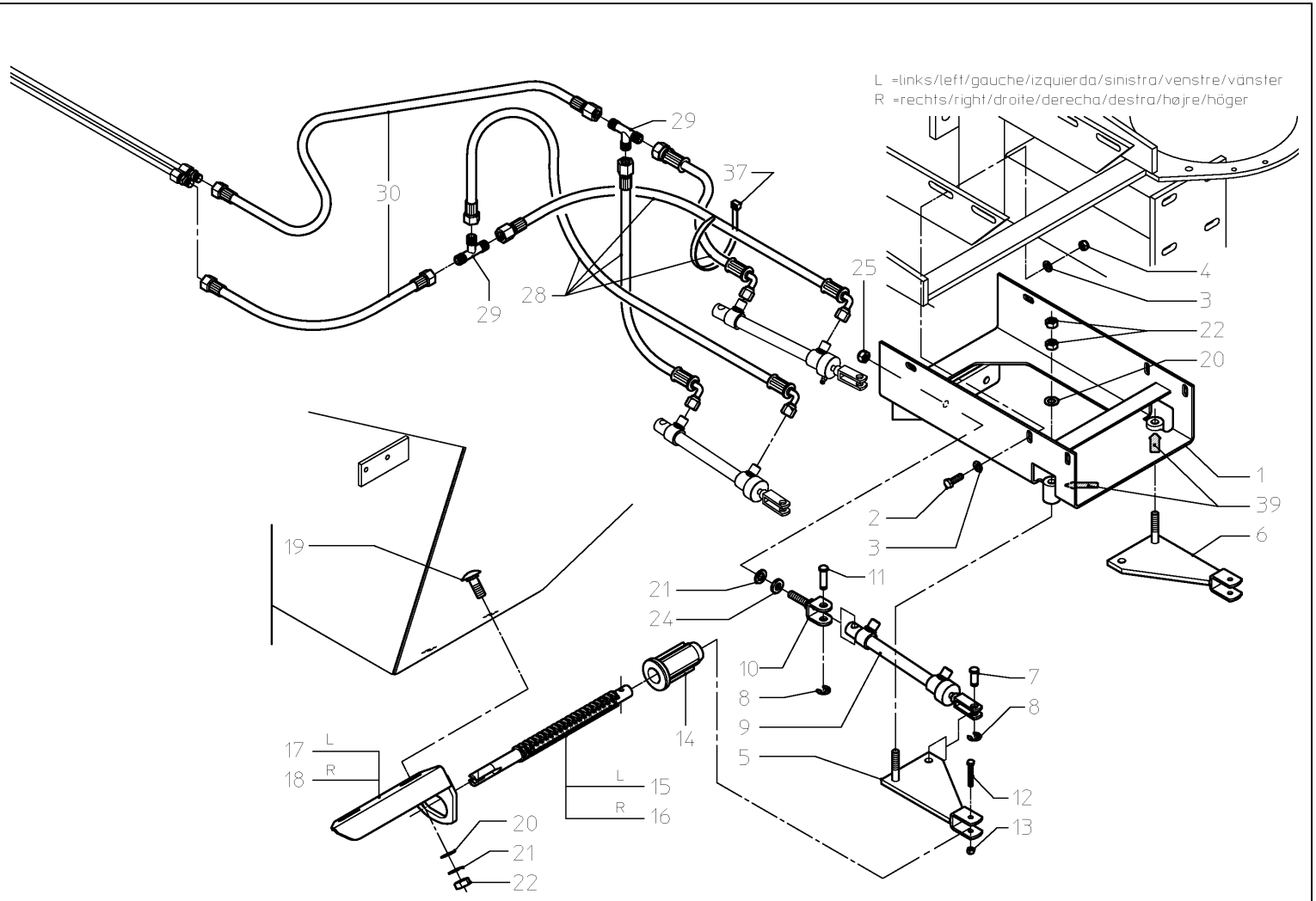

KV_PENTON_VN22000_K12

PENTON-RS-M / LIGHTING

PosNo.	Part No.	Qty.
1	VN48523002	4
2	VN48523001	2
4	KG01070100	8
5	VNB3452478	1
6	VNB3452378	1
7	VNB3620578	2
8	VNB1128178	
9	VNB1128078	
13	KG01267762	2
18	KG01072662	1
24	KG01264100	16
48	KG00496800	2
49	KG01069900	3
54	KG01263900	6
80	VNB4353586	2
81	VNB4353686	2
82	VNB4353786	1
83	VNB4353878	1
84	VNB4353986	1
85	VNB4354086	1
86	KG00501000	8
87	KG00496900	1
88	KG00480662	1
95	VN38820159	2
96	VNB4470978	2

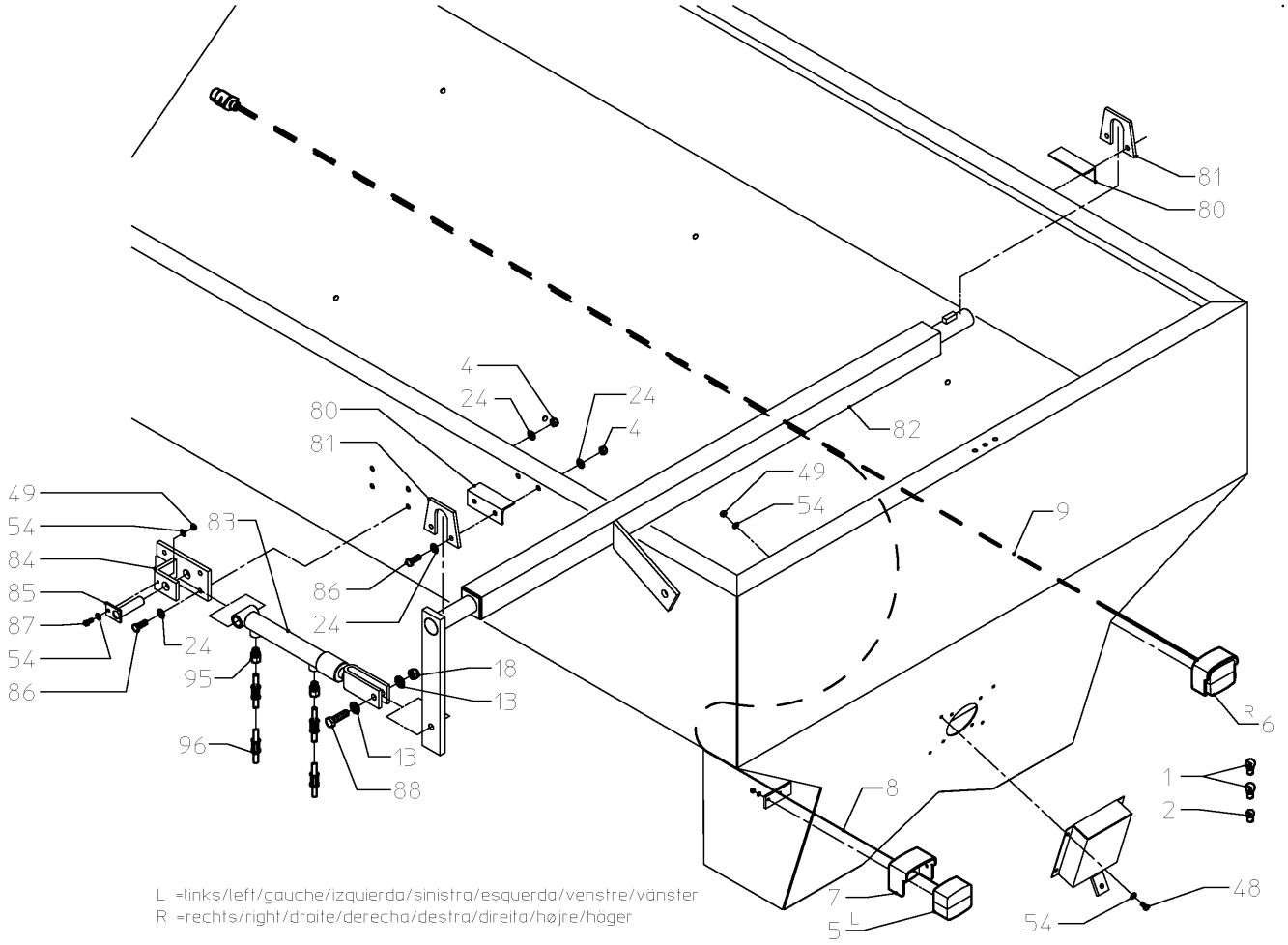

KV_PENTON_VN22000_K07

PENTON-RS-M / SHAFT, UNIV. JOINT

PosNo.	Part No.	Qty.
4	KG01070100	2
20	KG01070000	2
24	KG01264100	4
28	VNB4352086	1
29	VNB4352193	1
30	KG01255261	1
31	KG00483862	1
34	VNB4352702	1
35	VN40724307	1
36	VN41701200	1
37	KG00397700	2
38	KG01264000	2
39	VNB1641978	1
40	VNB4352378	1
41	KG00399600	2
44	VN46120100	1
53	KG01052562	1

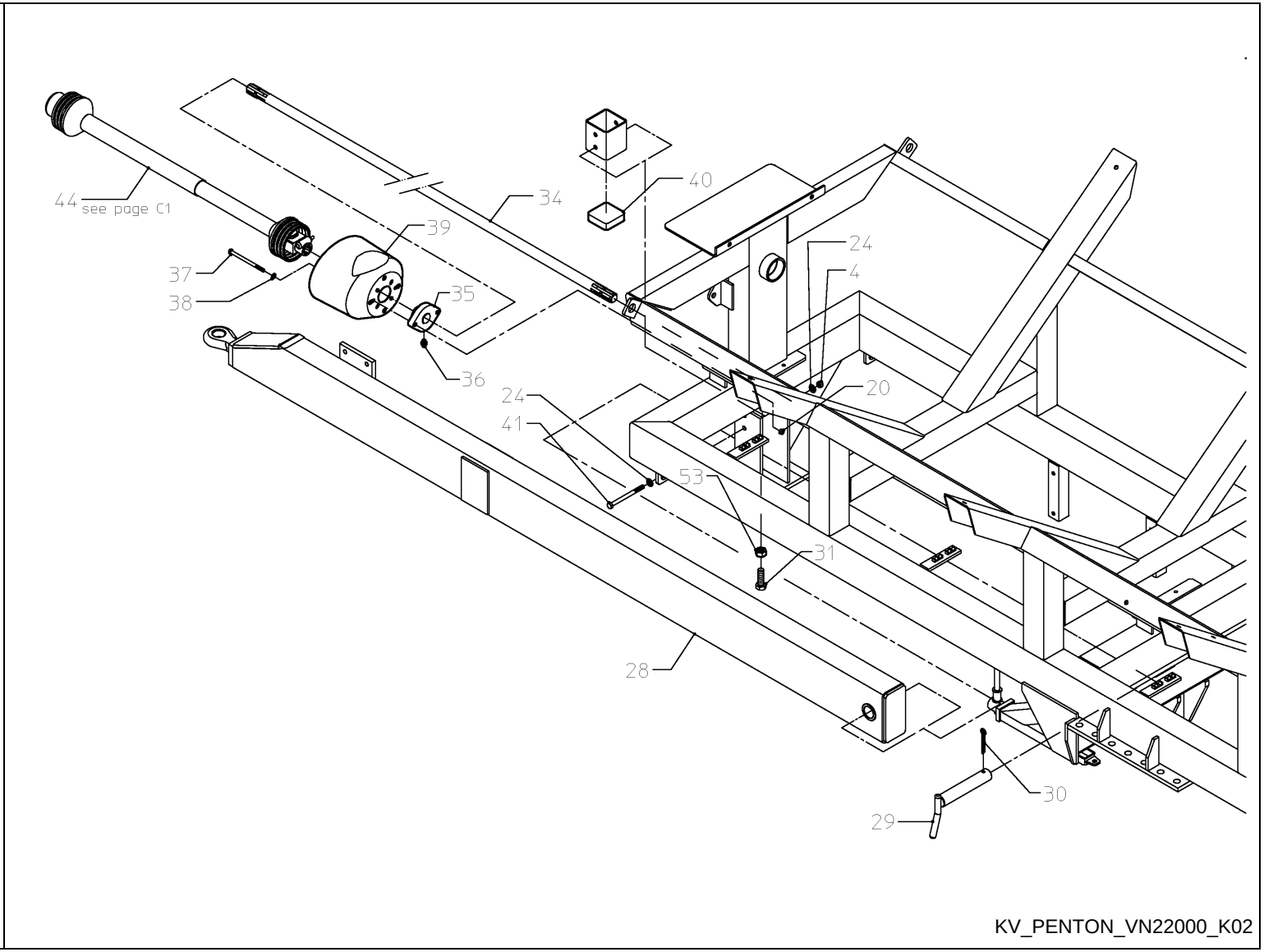

PENTON-RS-M / SHAFT, UNIV. JOINT

PosNo.	Part No.	Qty.
20	KG01070000	7
35	VN40724307	1
36	VN41701200	1
37	KG00397700	2
38	KG01264000	10
39	VNB1641978	1
45	VNB4352594	1
46	VNB4352694	1
47	KG00498700	4
48	KG00496800	6
49	KG01069900	6
54	KG01263900	12
58	VNB4471486	1
59	KG01053900	1
60	VNB4471393	1
61	KG00397200	1
62	VN46120092	1

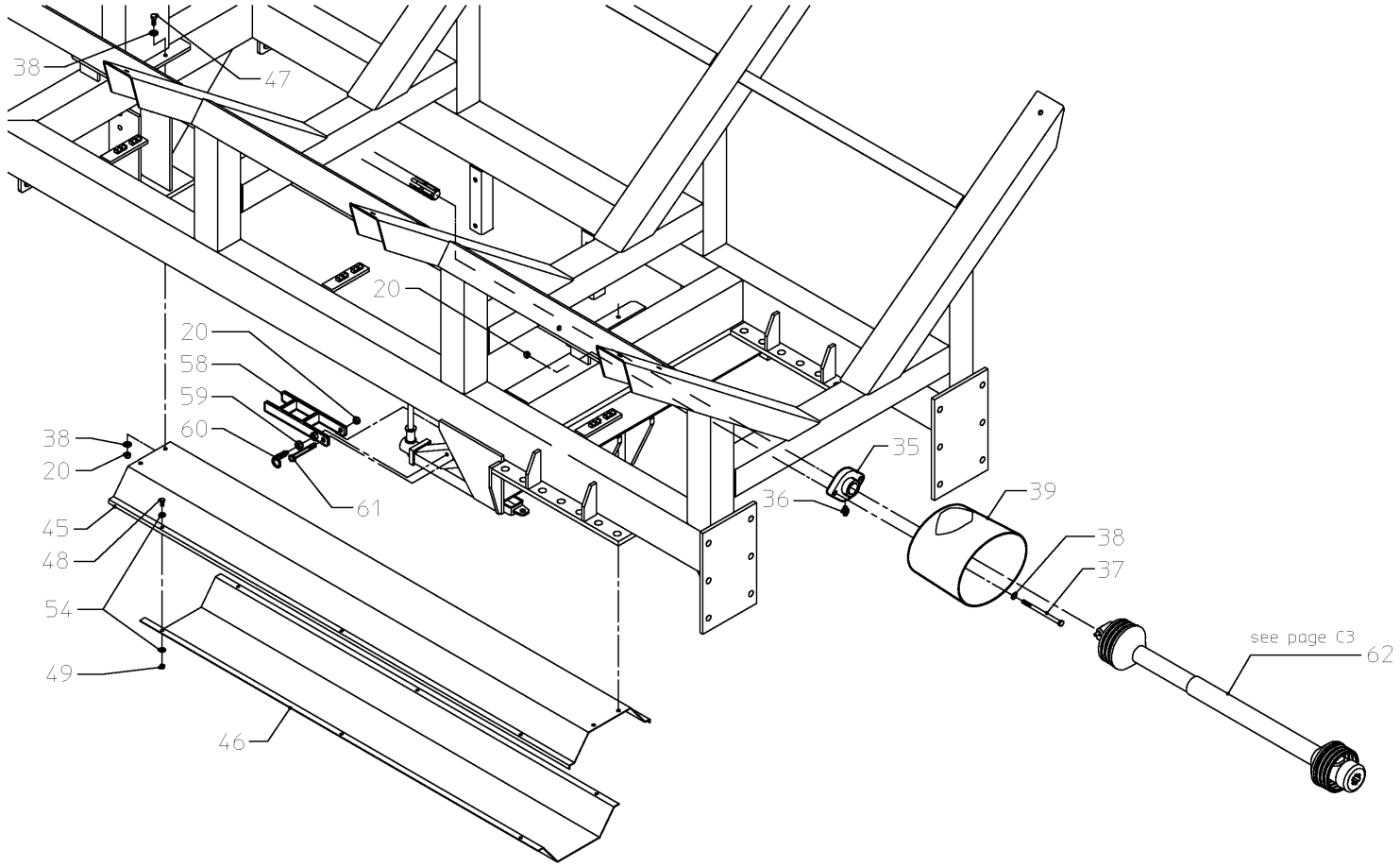

KV_PENTON_VN22000_K03

PENTON-RS-M / SHAFT, UNIV. JOINT

PosNo.	Part No.	Qty.
1	VN46120100	
4	VG85.005	
5	VG85.004	
11	VG10.83.40	
12	VGAGRASET173	
13	VG10.22.284	
21	VG10.01.00	
22	VGND98026V	
23	VG10.48.00	
24	KG01192062	
25	VG75.02.102	
26	VG75.12.115	
27	VG10.49.00	
51	VG83.09.01	
52	VG85.05.06	
53	VG365305	
54	VG83.10.03	
55	VG82.36.03	
90	VGAGRASET207	

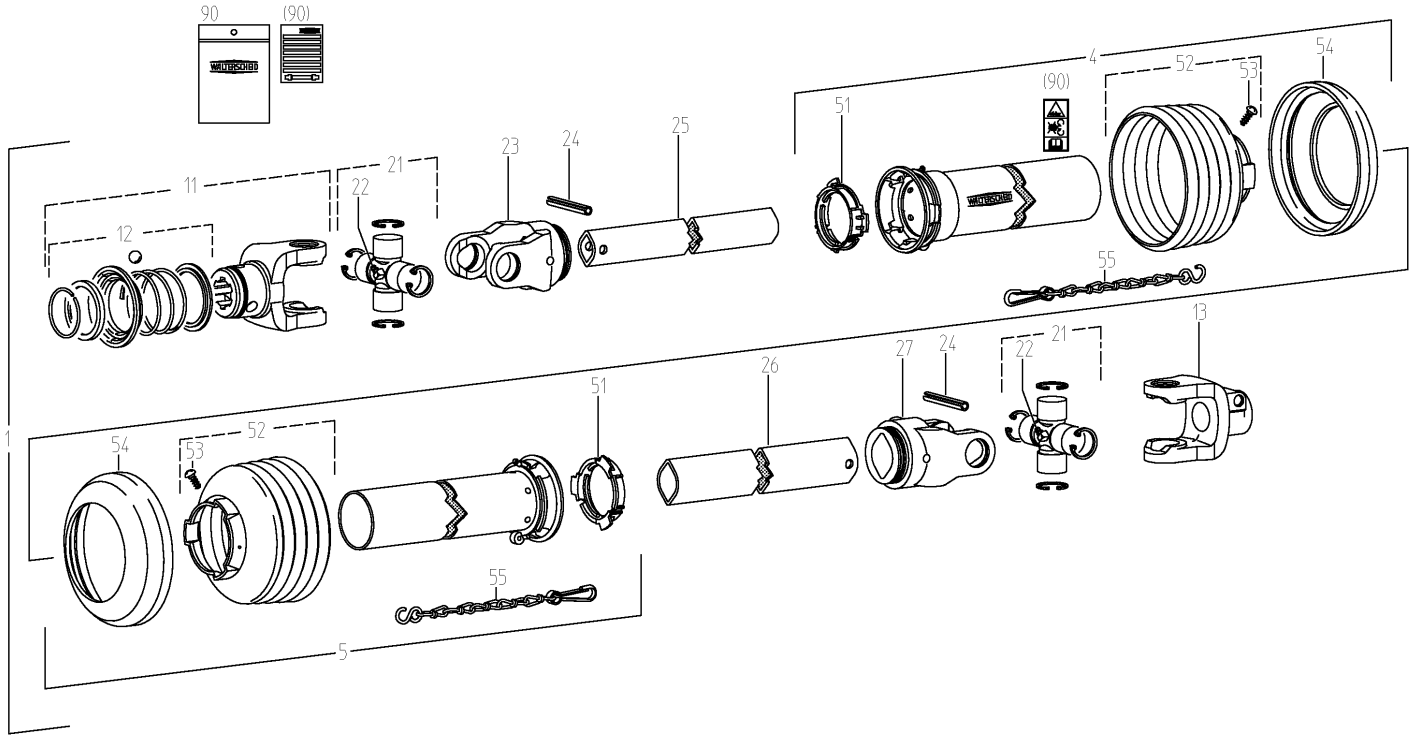

KV_PENTON_VN22000_C01

PENTON-RS-M / SHAFT, UNIV. JOINT

PosNo.	Part No.	Qty.
1	VN46120092	
4	VG85.005	
5	VG85.004	
11	VG10.83.40	
12	VGAGRASET173	
13	VG56.117.19	
21	VG10.01.00	
22	VGND98026V	
23	VG10.48.00	
24	KG01192062	
25	VG75.02.15	
26	VG75.06.15	
27	VG10.49.00	
51	VG83.09.01	
52	VG85.05.06	
53	VG365305	
54	VG83.10.03	
55	VG82.36.03	
90	VGAGRASET207	

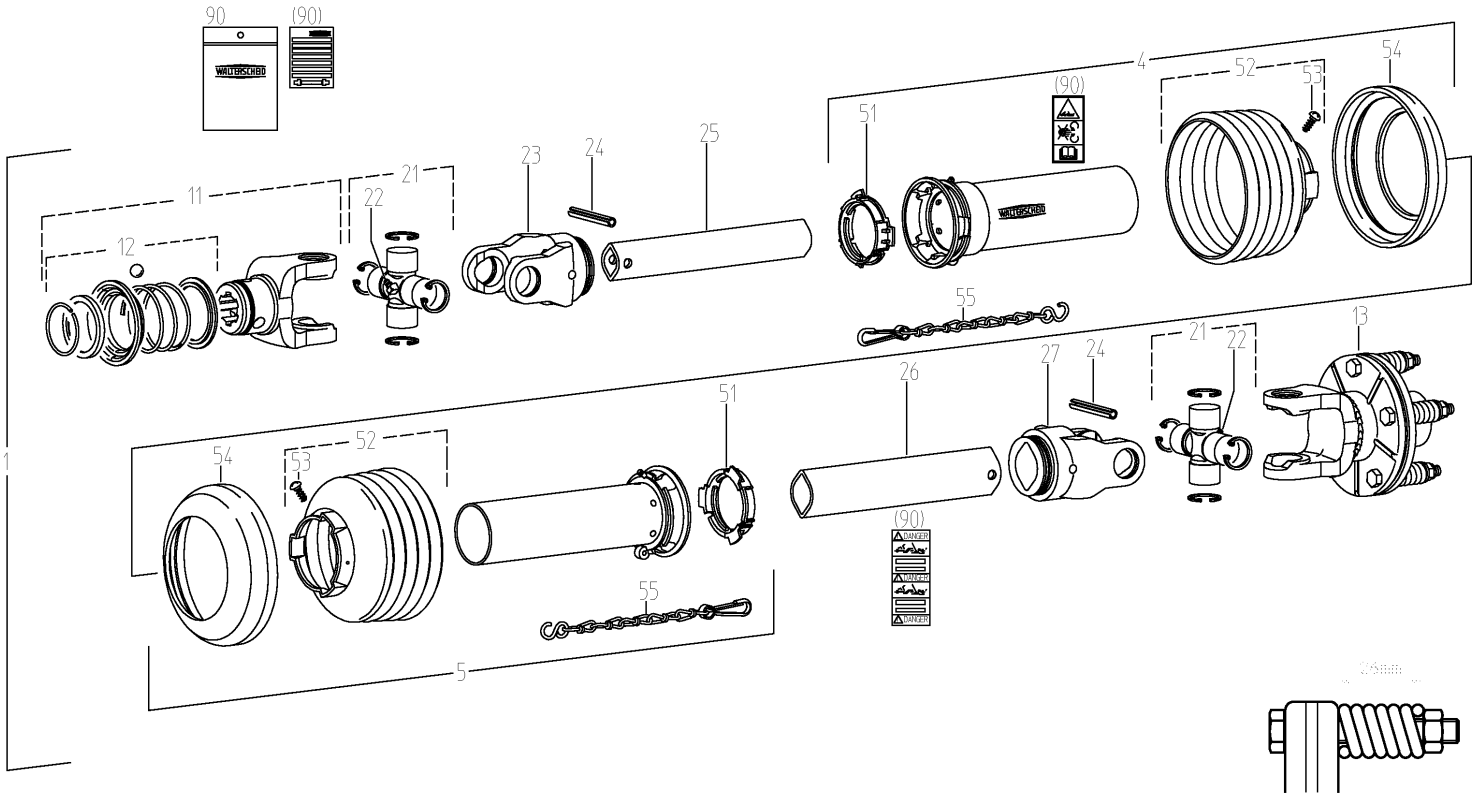

KV_PENTON_VN22000_C03

PENTON-RS-M / DECAL SCHEMATIC

PosNo.	Part No.	Qty.
1	VNB4336774	3
2	VNB1194874	1
3	VNB1181374	1
4	VNB1310474	1
5	VNB3861874	1
7	RG00052288	1
8	VNB4376974	1
9	VNB4377074	1
10	VNB4377274	2
12	VGTR2059	1
13	KK742357	1

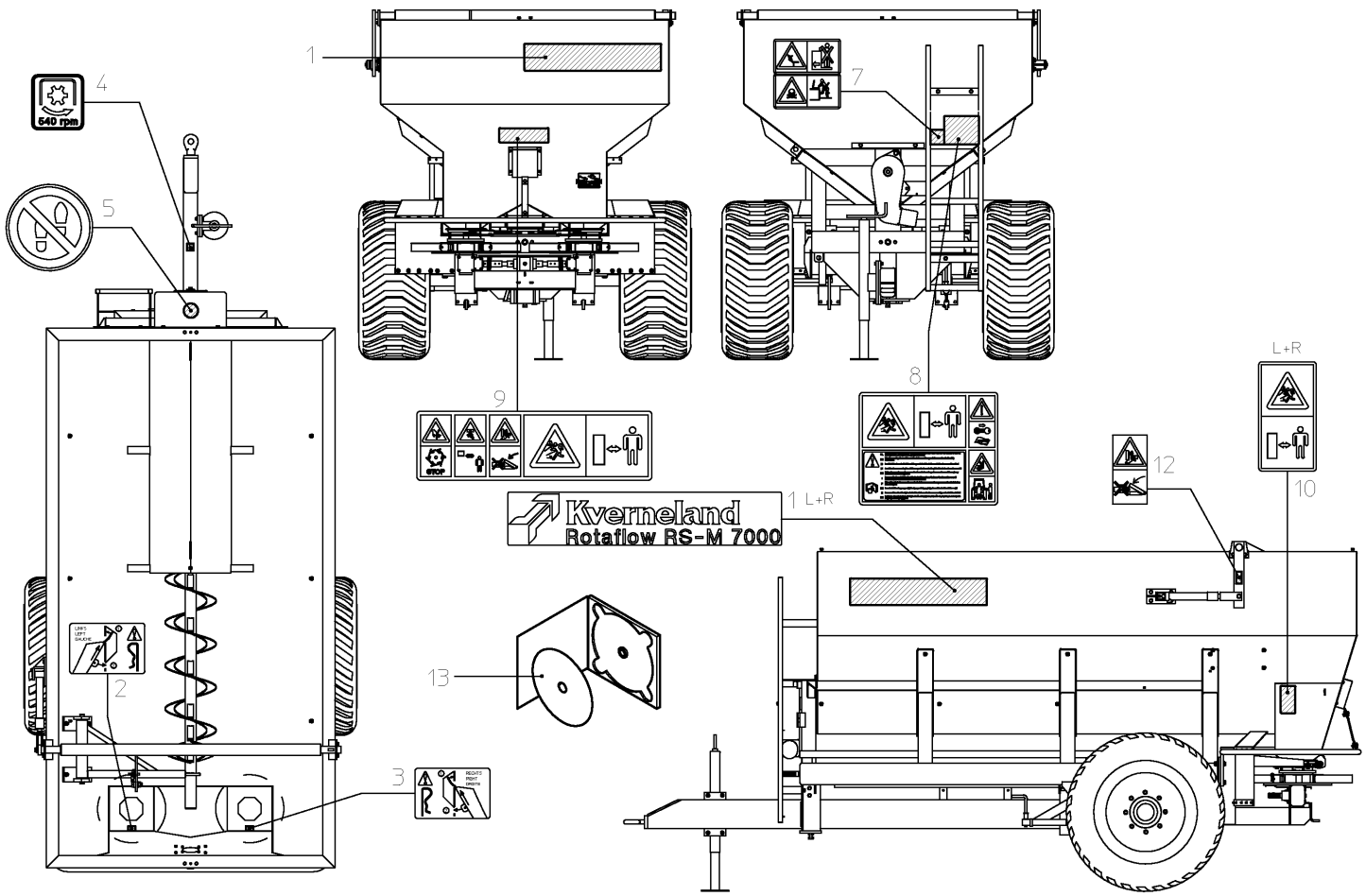

KV_PENTON_VN22000_C16

PENTON-RS-M / FRAME (UNIT)

PosNo.	Part No.	Qty.
13	KG01267762	24
18	KG01072662	12
20	KG01070000	2
38	KG01264000	4
59	VNB4352986	1
60	VNB4353486	1
61	KG00480762	4
62	KG00480362	8
63	VNB4471794	1
64	VNB4354994	1
65	KG00498900	2
66	VNB4355178	1
67	KG00495200	24
68	KG01901300	24
69	KG01069800	24

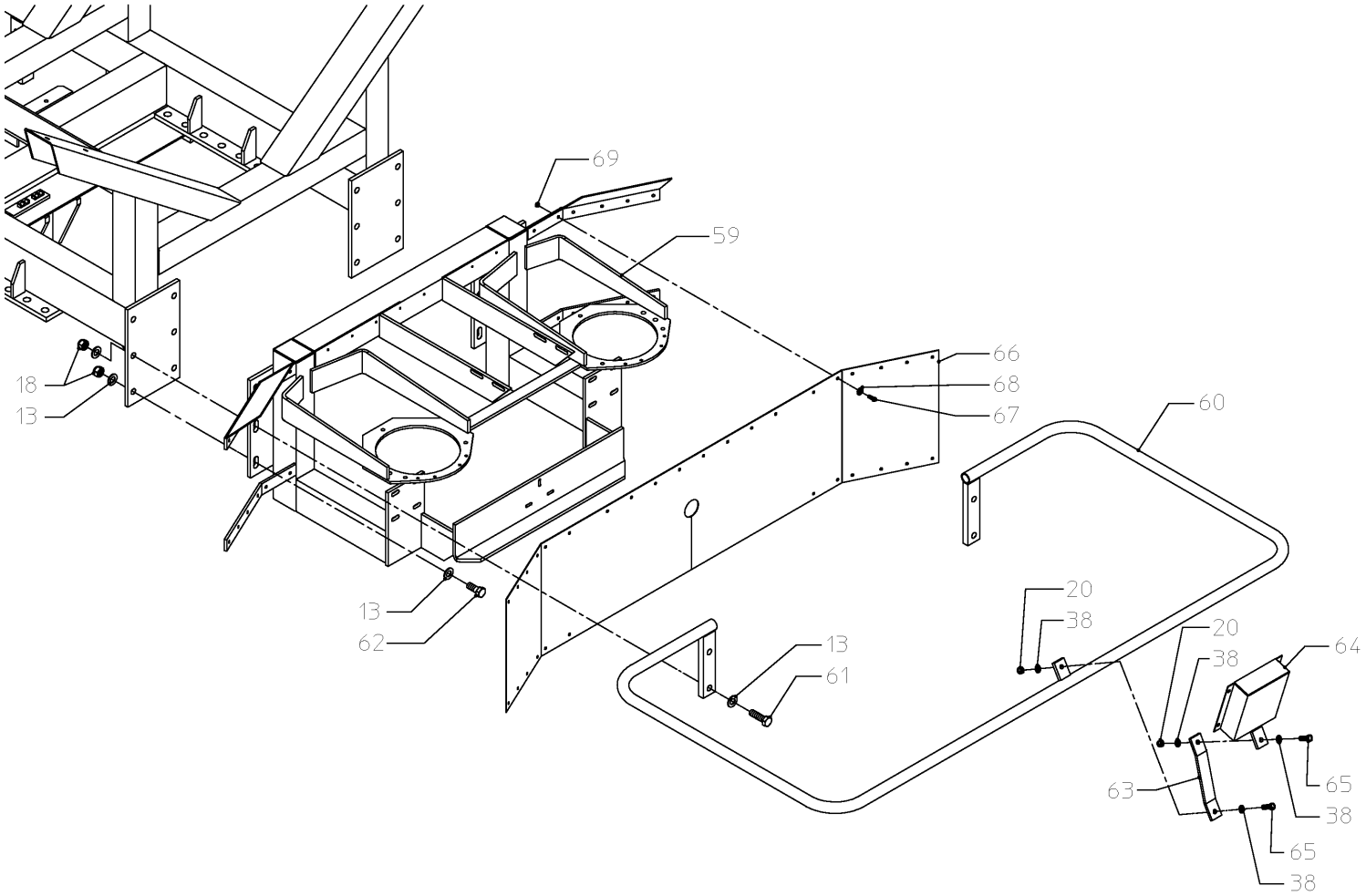

KV_PENTON_VN22000_K04

PENTON-RS-M / DRIVE (UNIT)

PosNo.	Part No.	Qty.
1	VNB4064778	1
2	KG00397500	4
3	KG01264000	24
4	KG01070000	7
5	VNB3967093	2
6	VN30117100	15
7	VNB0682993	2
8	VNB3967393	2
9	VNB2417578	2
10	VNB1593593	2
11	KG00497200	6
12	KG01263900	6
13	KG01069900	12
14	VNB4064578	1
15	VNB4064678	1
16	VNB2417602	12
17	RG00050664	6
18	KG01053800	8
19	VNB4369693	2
20	VNB1953394	1
21	KG01901500	6
22	KG00498800	3
23	KG00397400	8
24	VNB3734878	3
25	VNB3910902	2
26	KG01192162	4
27	VNB3331194	1
28	KG01044900	4
29	VNB2134778	1

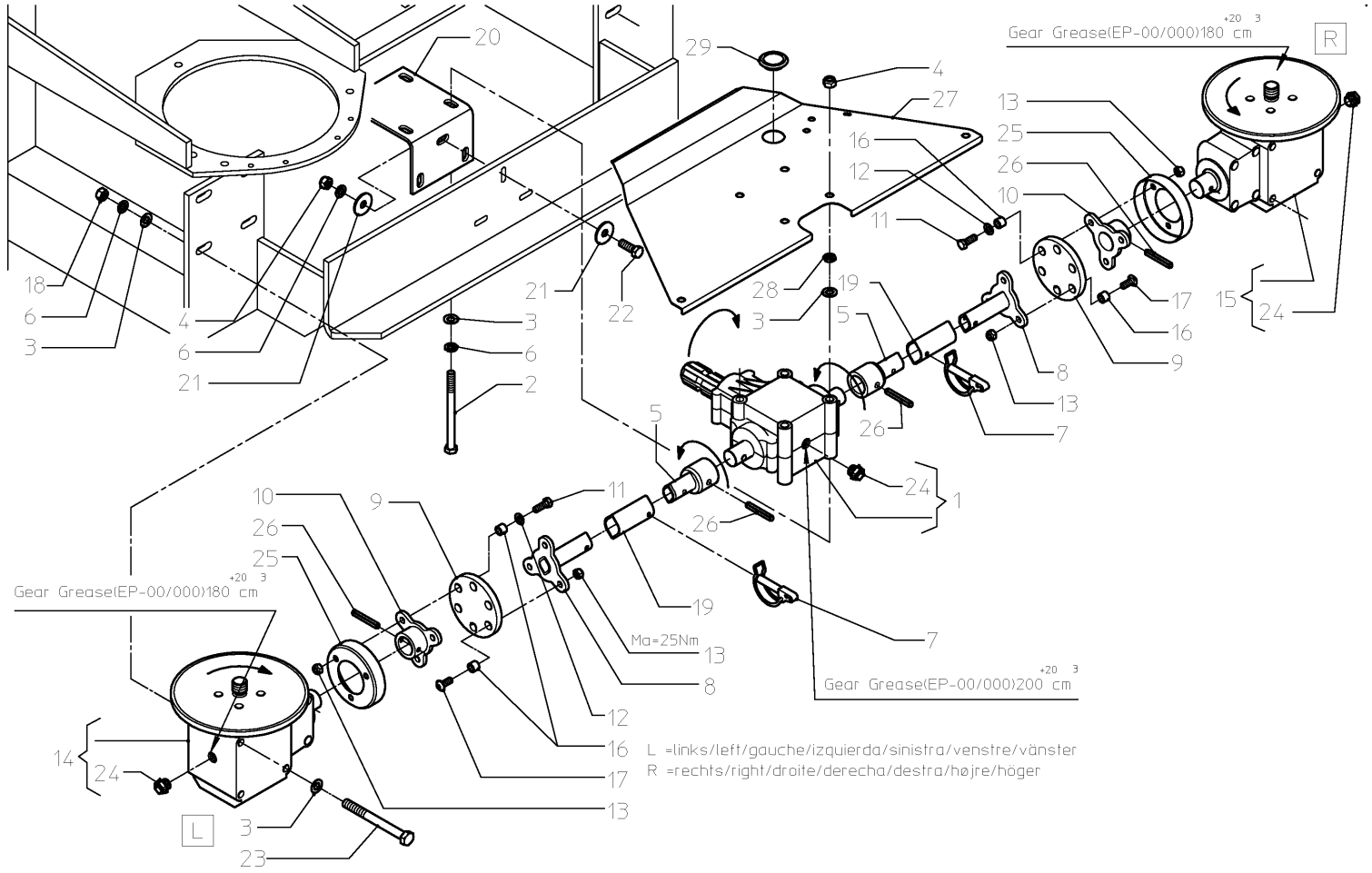

KV_PENTON_VN22000_K09

PENTON-RS-M / PROTECTION (UNIT)

PosNo.	Part No.	Qty.
13	KG01267762	24
18	KG01072662	12
20	KG01070000	2
38	KG01264000	4
59	VNB4352986	1
60	VNB4353486	1
61	KG00480762	4
62	KG00480362	8
63	VNB4471794	1
64	VNB4354994	1
65	KG00498900	2
66	VNB4355178	1
67	KG00495200	24
68	KG01901300	24
69	KG01069800	24

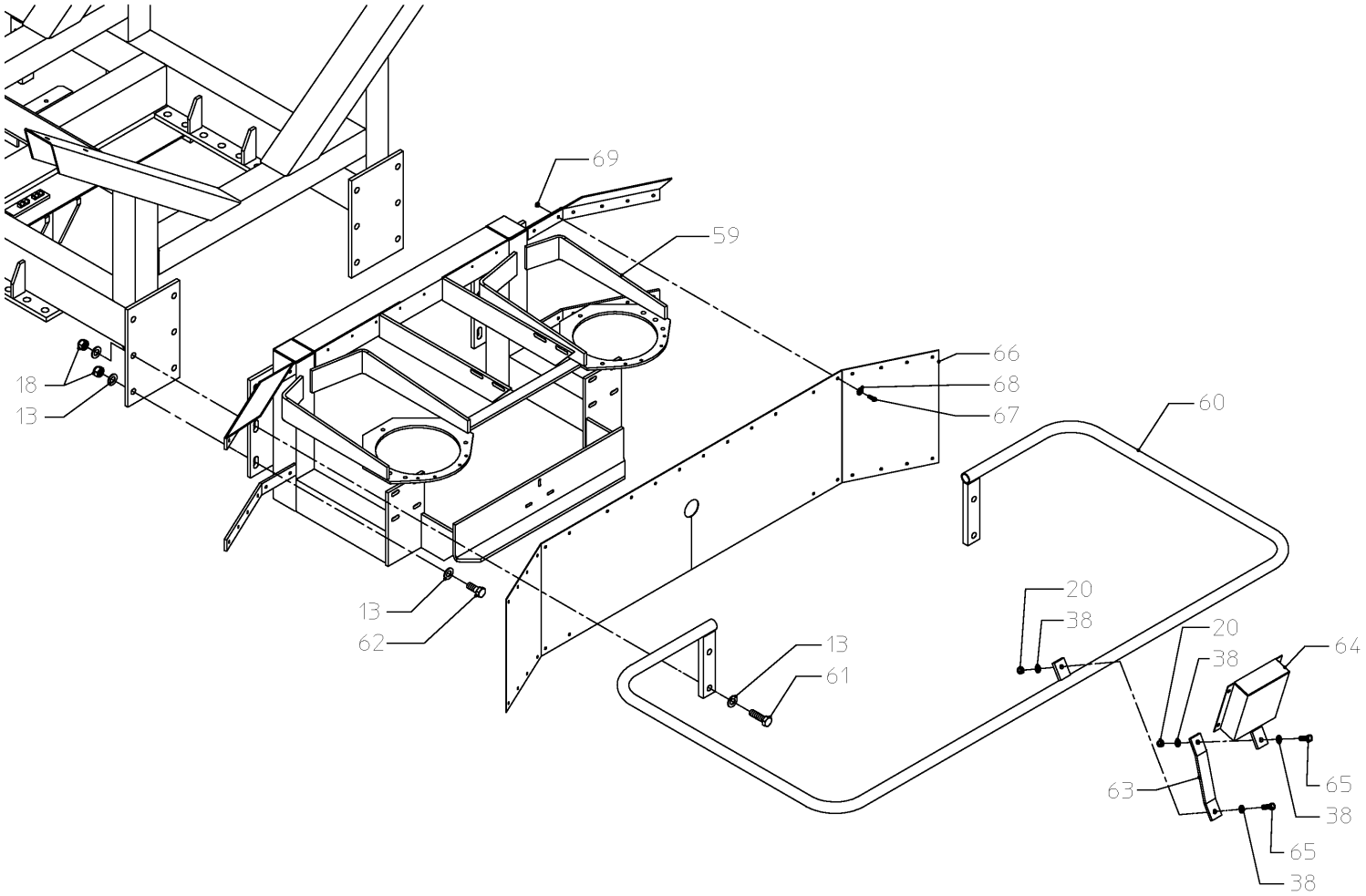

KV_PENTON_VN22000_K04

PENTON-RS-M / DISC, BROADCASTER (UNIT)

PosNo.	Part No.	Qty.
1	VNB4255402	1
2	VNB1194874	1
3	VNB4255502	1
4	VNB1181374	1
5	VNB1077665	2
6	KG01204600	4
7	VNB1077702	2
8	VNB1654565	1
9	VNB1654465	1
10	VNB2333794	2
11	KG00565700	2
12	KG01069900	2
13	VNB1082102	12
14	VNB1060002	4
15	VNB1998902	4
16	VNB1999002	4
17	VNB1999102	4
18	VN79771219	1

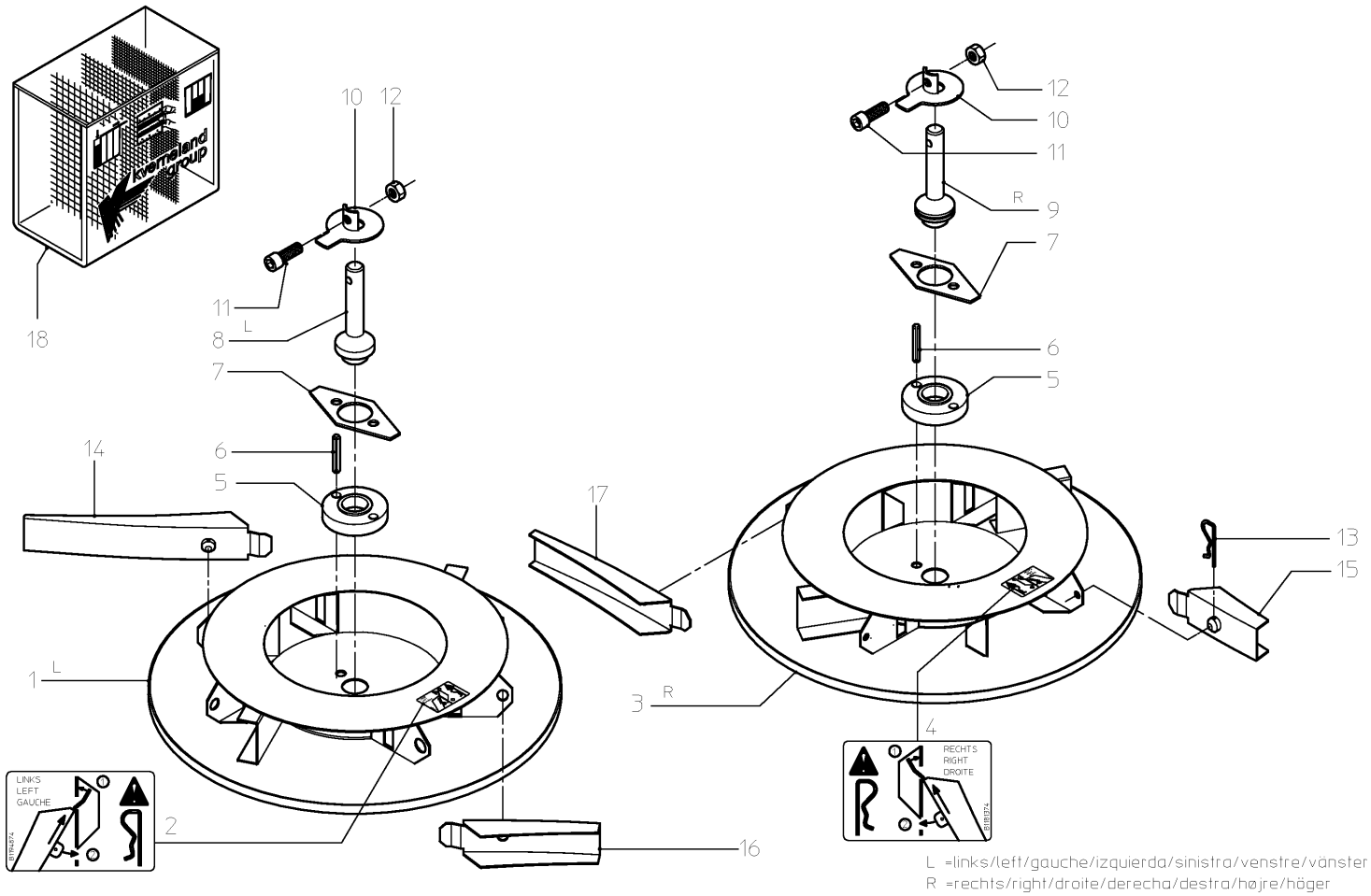

KV_PENTON_VN22000_K10

PENTON-RS-M / DOSAGE (UNIT)

PosNo.	Part No.	Qty.
1	VNB2333878	2
2	KG00738100	6
3	VNB4061702	2
4	VNB1578602	1
5	VNB1578502	1
6	VNB1616886	1
7	VNB1616786	1
8	VNB4073178	2
10	KG01069800	18
11	KG00499200	6
12	VN30117100	12
13	KG01053800	4
14	KG01044900	18
15	KG01264000	16
16	VNB2068678	2
18	KG00654500	6
20	VNB1617078	2
21	VNB1774102	1
22	VNB1774002	1
23	KG00713700	8
24	KG01263700	8
25	KG01069700	8
26	VNB4300978	2
27	KG00870200	4
30	KG01901500	2
31	VN17856588	2
32	VNB2544402	1
33	VNB2544502	1
34	VNB2544378	2
35	VNB2544102	2
36	VNB2544002	2
37	KG00495100	8
38	KG01901300	12
39	VNB4059402	2
40	VNB4061978	2

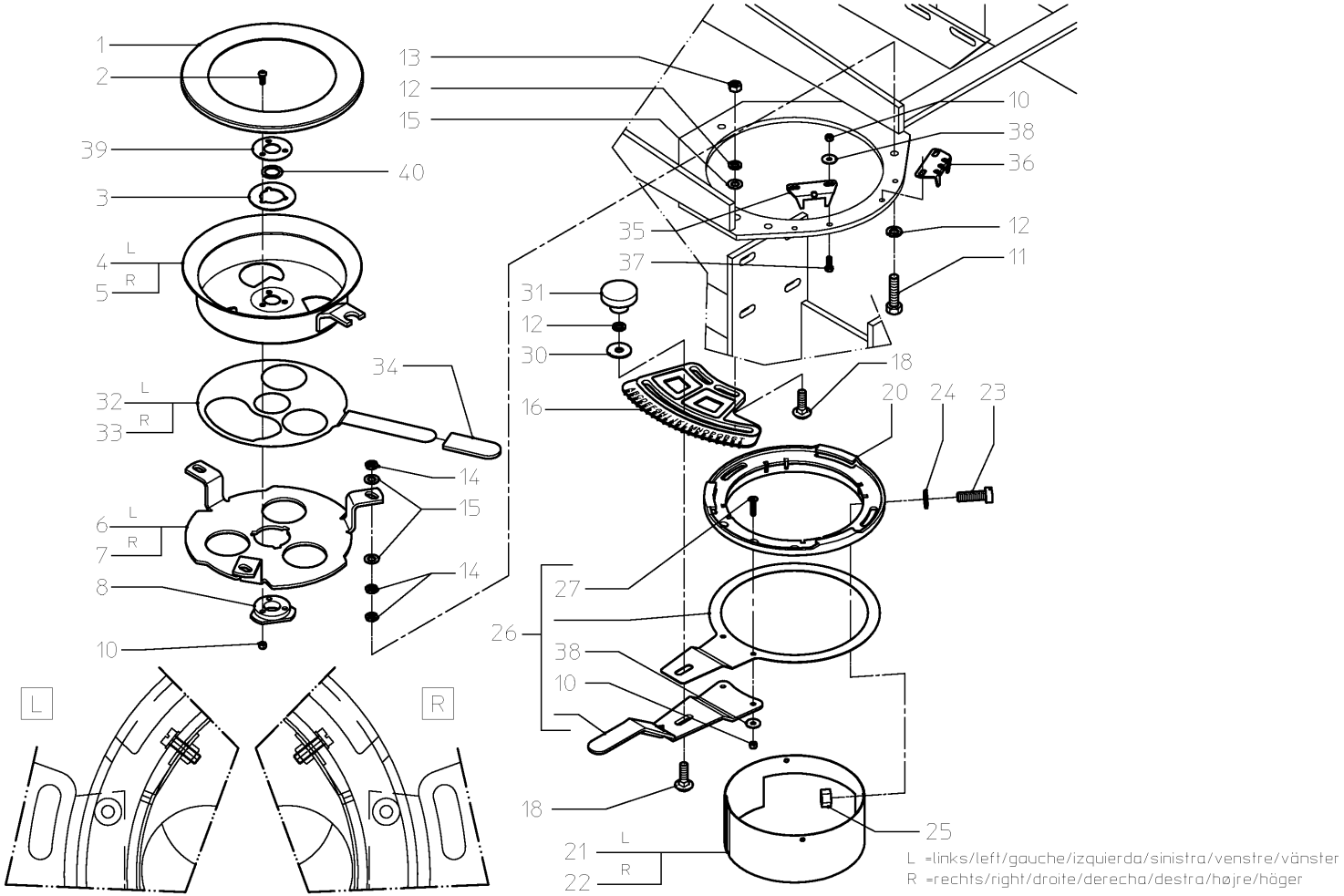

KV_PENTON_VN22000_K11

PENTON-RS-M / CONTROL (UNIT)

PosNo.	Part No.	Qty.
1	VNB2333878	2
2	KG00738100	6
3	VNB4061702	2
4	VNB1578602	1
5	VNB1578502	1
6	VNB1616886	1
7	VNB1616786	1
8	VNB4073178	2
10	KG01069800	18
11	KG00499200	6
12	VN30117100	12
13	KG01053800	4
14	KG01044900	18
15	KG01264000	16
16	VNB2068678	2
18	KG00654500	6
20	VNB1617078	2
21	VNB1774102	1
22	VNB1774002	1
23	KG00713700	8
24	KG01263700	8
25	KG01069700	8
26	VNB4300978	2
27	KG00870200	4
30	KG01901500	2
31	VN17856588	2
32	VNB2544402	1
33	VNB2544502	1
34	VNB2544378	2
35	VNB2544102	2
36	VNB2544002	2
37	KG00495100	8
38	KG01901300	12
39	VNB4059402	2
40	VNB4061978	2

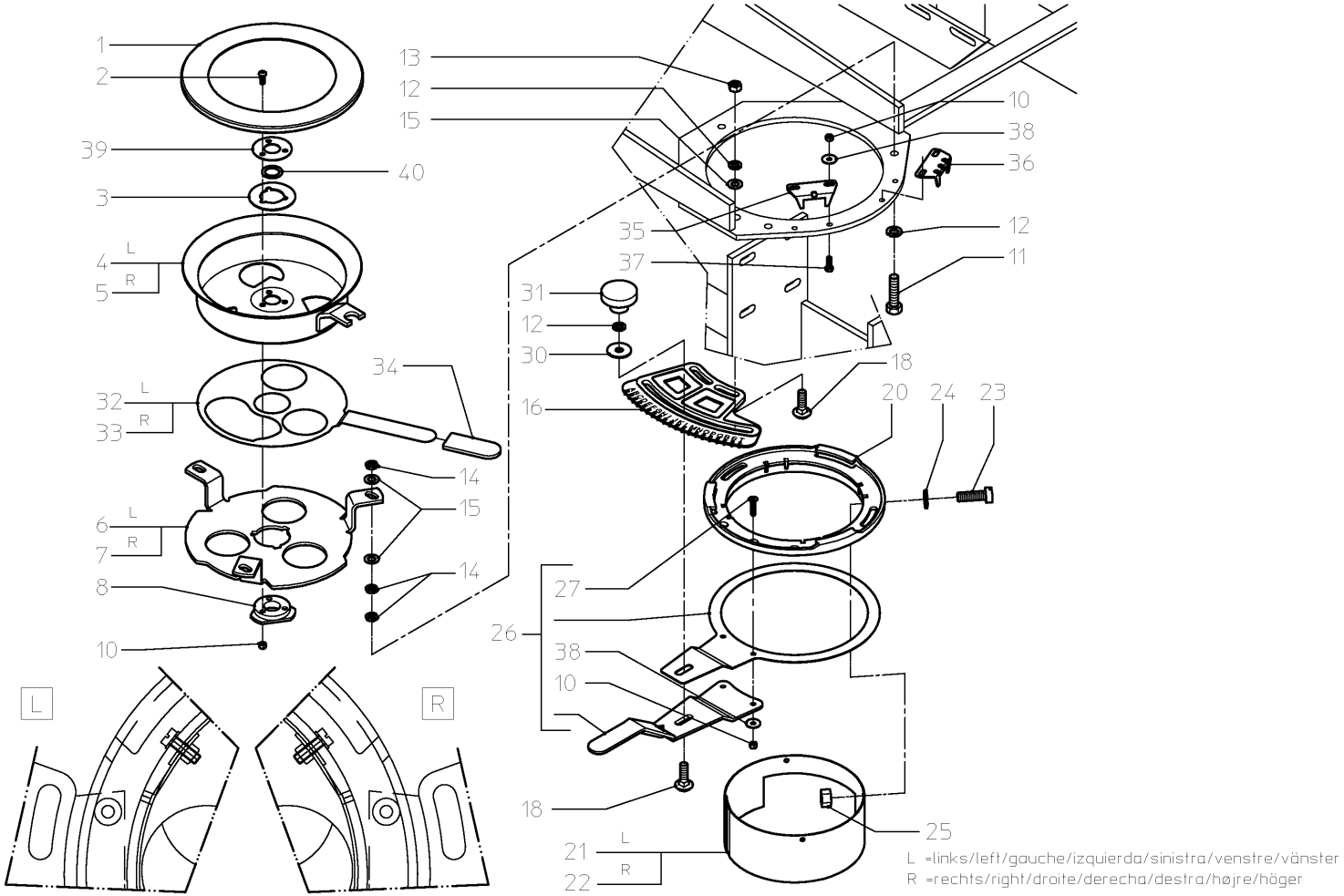

KV_PENTON_VN22000_K11

PosNo.	Part No.	Qty.

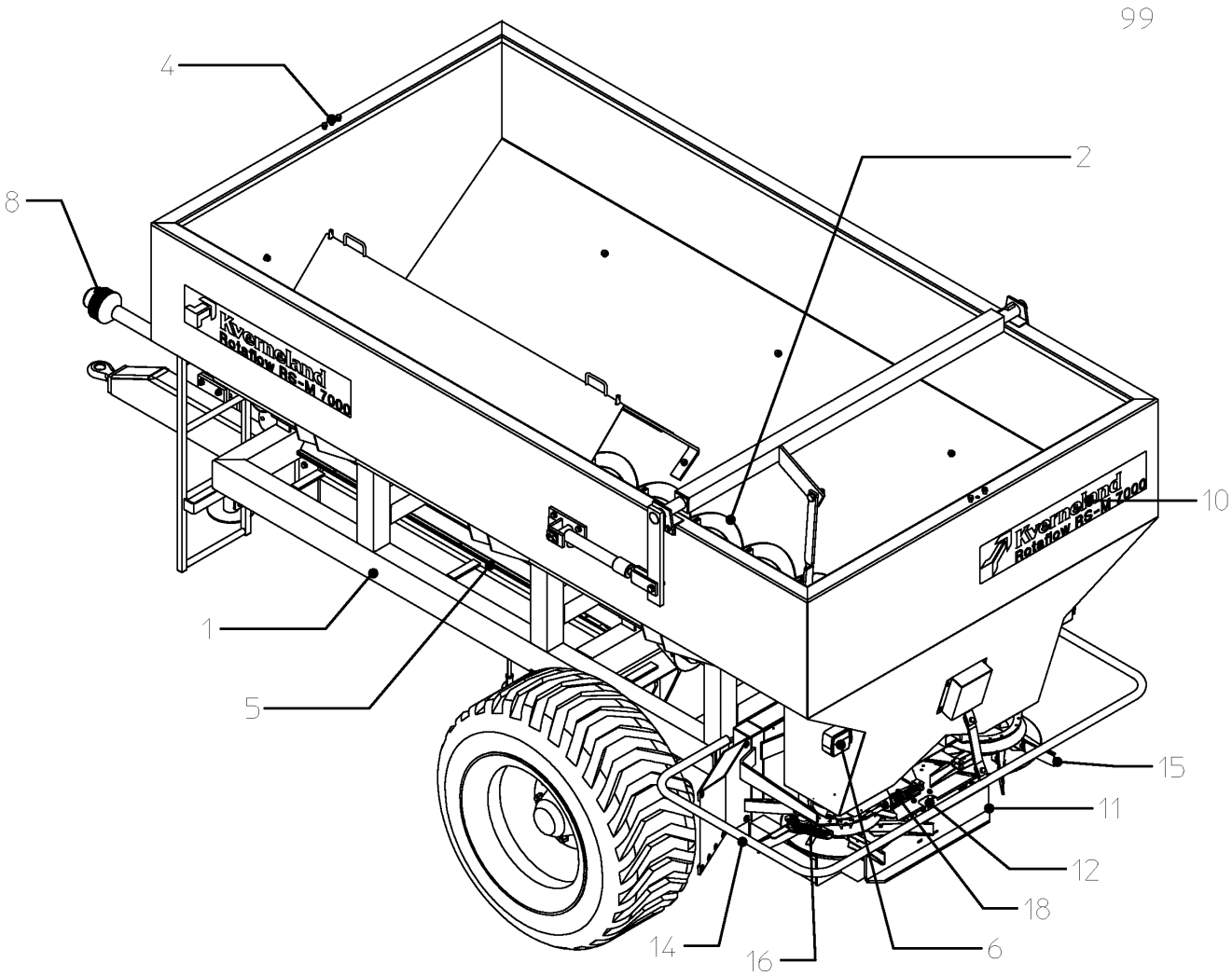

KV_PENTON_VN22000_A10

PENTON-RS-M / TARPAULIN

PosNo.	Part No.	Qty.
1	VNB4356778	1
2	VNB4473986	1
3	VNB4356878	1
4	KG00498800	4
5	KG01264000	8
6	KG01070000	4

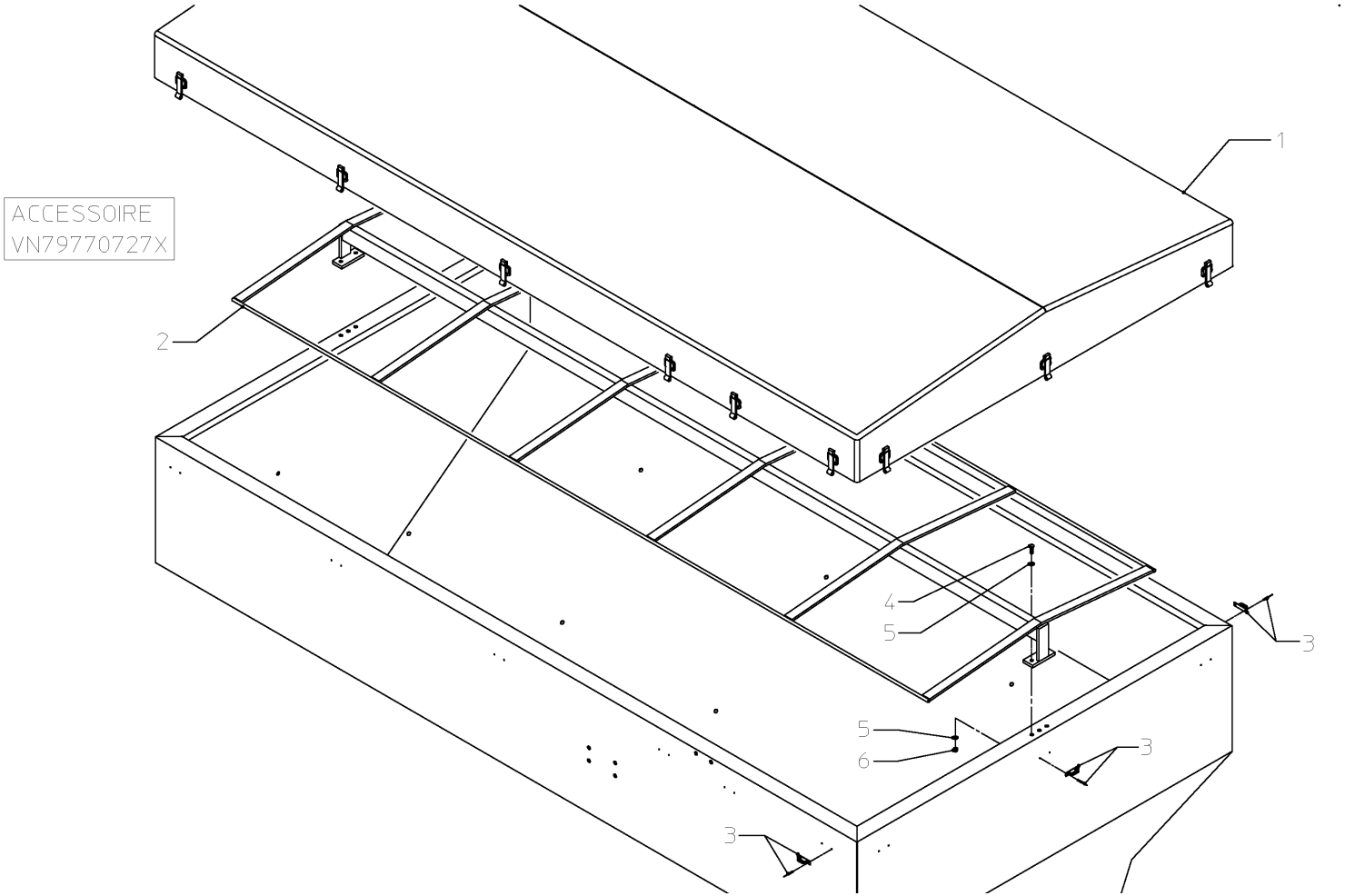

KV_PENTON_VN22000_K15

PENTON-RS-M / CALIBRATION CONTAINER

PosNo.	Part No.	Qty.
1	VNB1885578	1
2	VGTR2023	1

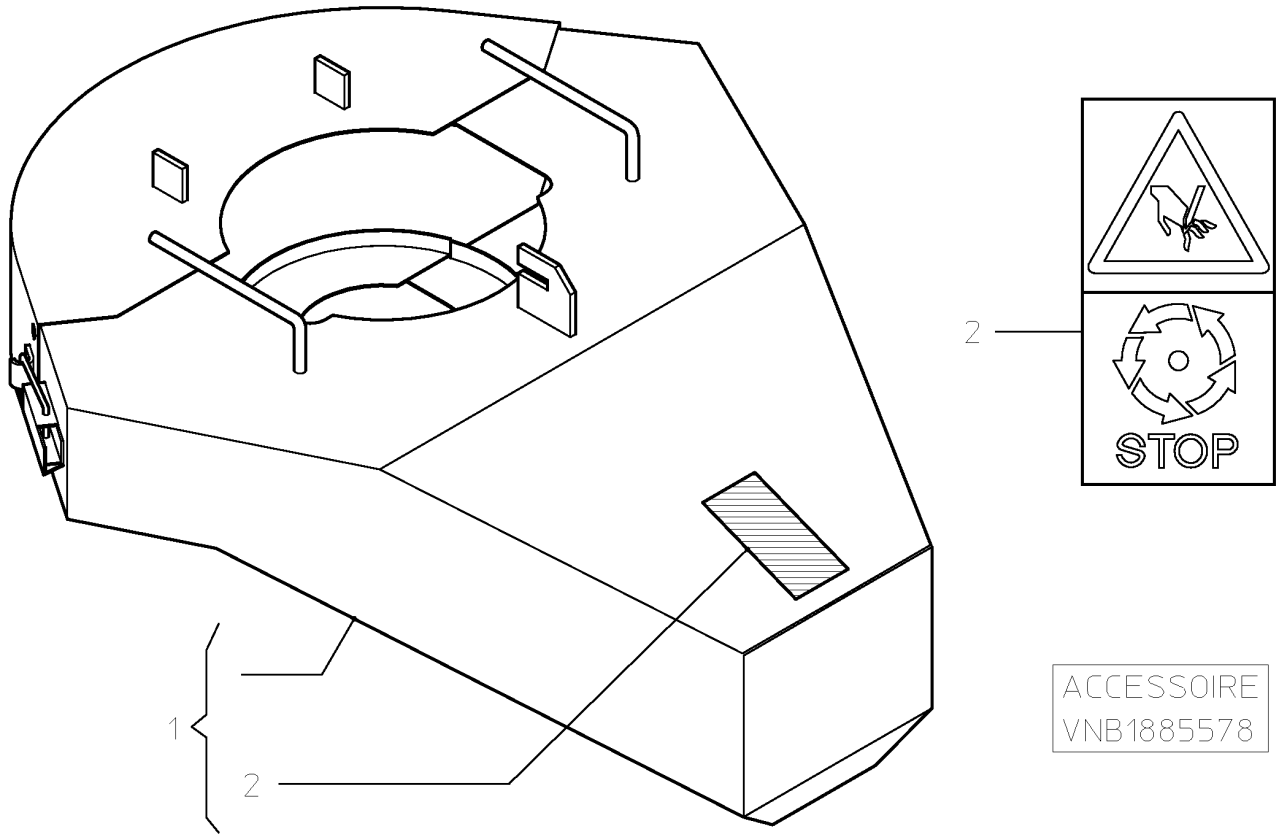

KV_PENTON_VN22000_K16

PENTON-RS-M / FEELER GAUGE

PosNo.	Part No.	Qty.
19	VNB1709302	1
20	VNB1754278	1

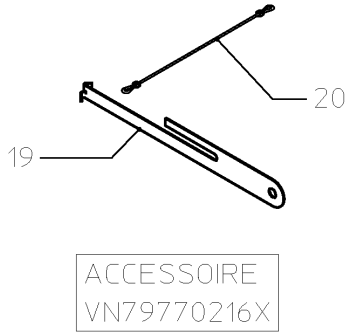

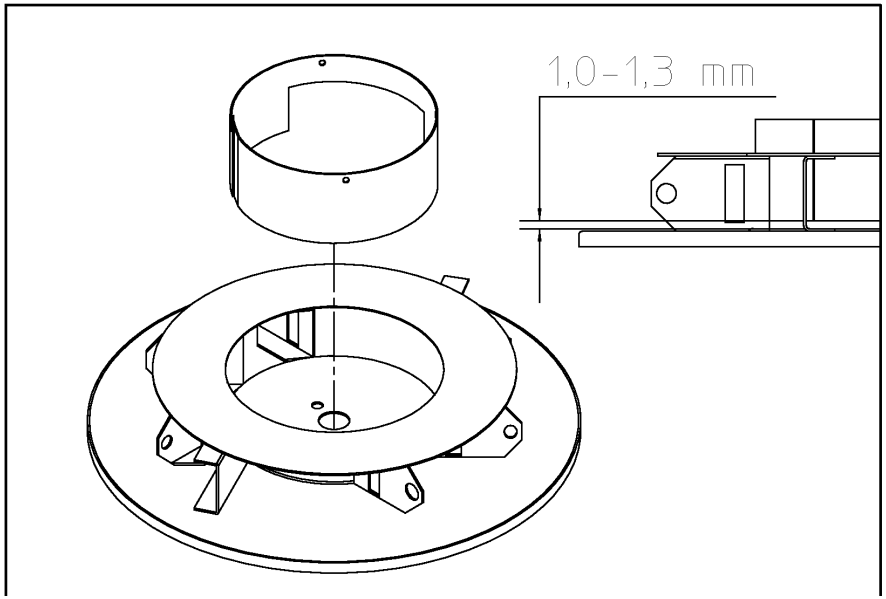

KV_PENTON_VN22000_K17

PENTON-RS-M / BOUNDARY SPREADING PLATE

PosNo.	Part No.	Qty.
18	VNB2836494	1
19	VNB2836894	1
20	VNB2836994	1
21	VN17856588	1
22	KG00654400	2

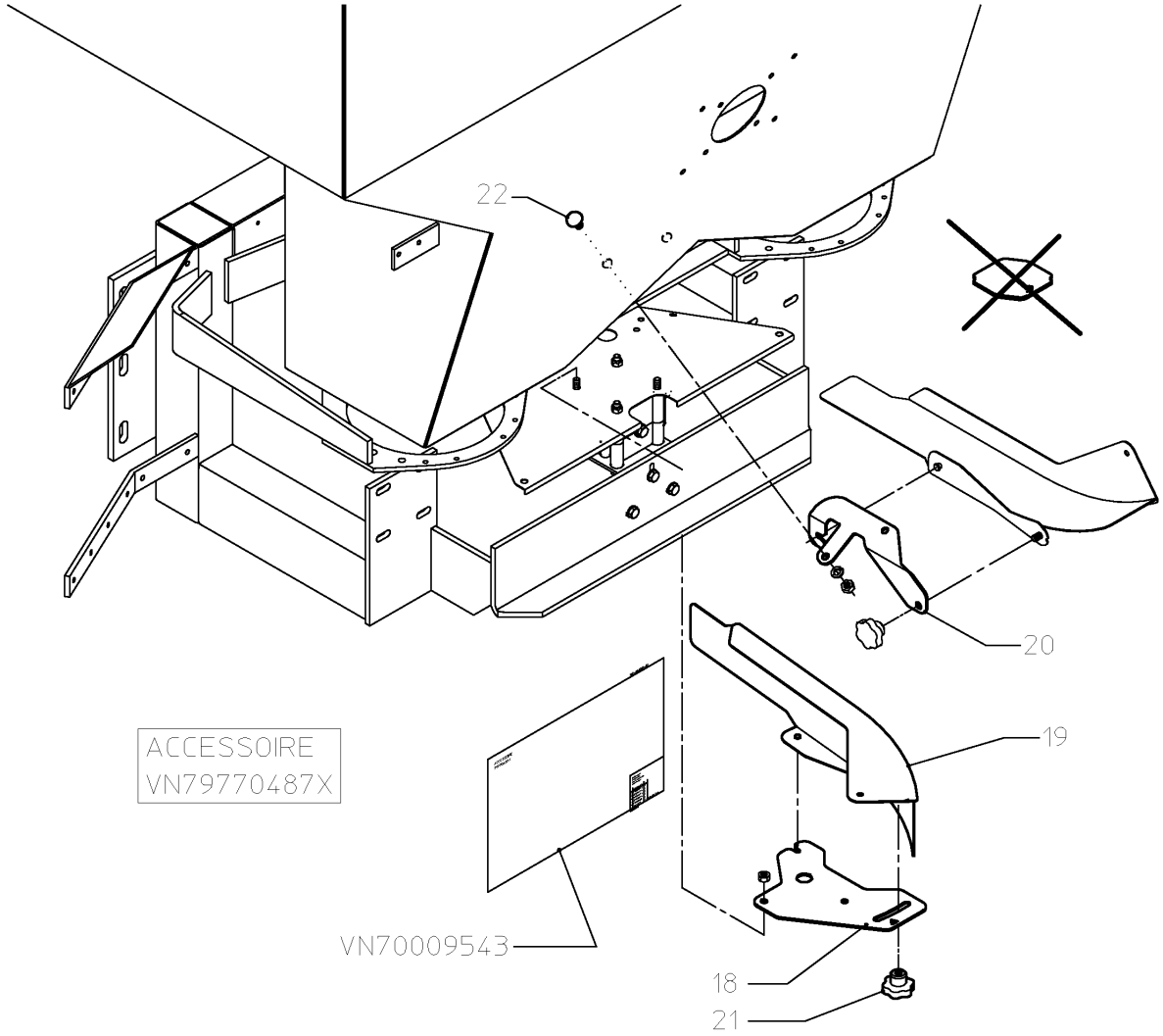

KV_PENTON_VN22000_K18

PENTON-RS-M / Part No Index

Part No.	Page	Pos No	Part No.	Page	Pos No	Part No.	Page	Pos No	Part No.	Page	Pos No
	1	25	KG00483862	2	31	KG00500900	4	3	KG01053900	3	59
	4	25	KG00483862	5	31	KG00500900	7	3	KG01053900	6	59
	11	25	KG00483862	17	31	KG00500900	9	3	KG01053900	18	59
KG00363962	1	17	KG00495100	26	37	KG00500900	10	3	KG01069700	26	25
KG00363962	4	17	KG00495100	27	37	KG00500900	11	3	KG01069700	27	25
KG00363962	11	17	KG00495200	22	67	KG00501000	8	86	KG01069800	8	69
KG00393000	14	29	KG00495200	24	67	KG00501000	12	86	KG01069800	14	31
KG00397200	3	61	KG00495300	8	94	KG00501000	16	86	KG01069800	15	13
KG00397200	6	61	KG00495500	1	39	KG00565700	25	11	KG01069800	22	69
KG00397200	18	61	KG00495500	4	39	KG00654300	15	19	KG01069800	24	69
KG00397400	23	23	KG00495500	11	39	KG00654400	32	22	KG01069800	26	10
KG00397500	23	2	KG00495600	15	12	KG00654500	1	19	KG01069800	27	10
KG00397700	2	37	KG00496800	3	48	KG00654500	4	19	KG01069900	3	49
KG00397700	3	37	KG00496800	6	48	KG00654500	11	19	KG01069900	6	49
KG00397700	5	37	KG00496800	12	48	KG00654500	26	18	KG01069900	7	49
KG00397700	6	37	KG00496800	16	48	KG00654500	27	18	KG01069900	9	49
KG00397700	17	37	KG00496800	18	48	KG00713700	26	23	KG01069900	12	49
KG00397700	18	37	KG00496900	12	87	KG00713700	27	23	KG01069900	15	4
KG00399600	2	41	KG00496900	16	87	KG00738100	26	2	KG01069900	16	49
KG00399600	5	41	KG00497100	7	56	KG00738100	27	2	KG01069900	18	49
KG00399600	17	41	KG00497100	9	56	KG00870200	26	27	KG01069900	23	13
KG00480262	1	23	KG00497100	15	2	KG00870200	27	27	KG01069900	25	12
KG00480262	4	23	KG00497200	23	11	KG01044900	15	24	KG01070000	1	20
KG00480262	11	23	KG00498700	3	47	KG01044900	23	28	KG01070000	2	20
KG00480362	22	62	KG00498700	6	47	KG01044900	26	14	KG01070000	3	20
KG00480362	24	62	KG00498700	18	47	KG01044900	27	14	KG01070000	4	20
KG00480562	1	12	KG00498800	23	22	KG01052562	2	53	KG01070000	5	20
KG00480562	4	12	KG00498800	29	4	KG01052562	5	53	KG01070000	6	20
KG00480562	11	12	KG00498900	22	65	KG01052562	17	53	KG01070000	11	20
KG00480662	12	88	KG00498900	24	65	KG01053800	15	22	KG01070000	15	25
KG00480662	16	88	KG00499200	26	11	KG01053800	23	18	KG01070000	17	20
KG00480762	22	61	KG00499200	27	11	KG01053800	26	13	KG01070000	18	20
KG00480762	24	61	KG00500900	1	3	KG01053800	27	13	KG01070000	22	20

PENTON-RS-M / Part No Index

Part No.	Page	Pos No	Part No.	Page	Pos No	Part No.	Page	Pos No	Part No.	Page	Pos No
KG01070000	23	4	KG01263800	14	30	KG01264100	12	24	VG10.49.00	19	27
KG01070000	24	20	KG01263900	3	54	KG01264100	16	24	VG10.49.00	20	27
KG01070000	29	6	KG01263900	6	54	KG01264100	17	24	VG10.83.40	19	11
KG01070100	2	4	KG01263900	12	54	KG01264500	8	52	VG10.83.40	20	11
KG01070100	5	4	KG01263900	15	3	KG01267762	1	13	VG365305	19	53
KG01070100	7	4	KG01263900	16	54	KG01267762	4	13	VG365305	20	53
KG01070100	8	4	KG01263900	18	54	KG01267762	11	13	VG56.117.19	20	13
KG01070100	9	4	KG01263900	23	12	KG01267762	12	13	VG75.02.102	19	25
KG01070100	10	4	KG01264000	1	38	KG01267762	16	13	VG75.02.15	20	25
KG01070100	12	4	KG01264000	2	38	KG01267762	22	13	VG75.06.15	20	26
KG01070100	16	4	KG01264000	3	38	KG01267762	24	13	VG75.12.115	19	26
KG01070100	17	4	KG01264000	4	38	KG01381100	1	9	VG82.36.03	19	55
KG01070400	8	92	KG01264000	5	38	KG01381100	4	9	VG82.36.03	20	55
KG01072662	1	18	KG01264000	6	38	KG01381100	11	9	VG83.09.01	19	51
KG01072662	4	18	KG01264000	11	38	KG01901300	22	68	VG83.09.01	20	51
KG01072662	11	18	KG01264000	15	20	KG01901300	24	68	VG83.10.03	19	54
KG01072662	12	18	KG01264000	17	38	KG01901300	26	38	VG83.10.03	20	54
KG01072662	16	18	KG01264000	18	38	KG01901300	27	38	VG85.004	19	5
KG01072662	22	18	KG01264000	22	38	KG01901400	7	57	VG85.004	20	5
KG01072662	24	18	KG01264000	23	3	KG01901400	9	57	VG85.005	19	4
KG01192062	19	24	KG01264000	24	38	KG01901500	23	21	VG85.005	20	4
KG01192062	20	24	KG01264000	26	15	KG01901500	26	30	VG85.05.06	19	52
KG01192162	23	26	KG01264000	27	15	KG01901500	27	30	VG85.05.06	20	52
KG01195662	1	8	KG01264000	29	5	KG01901600	10	97	VGAGRASET173	19	12
KG01195662	4	8	KG01264100	1	24	KK742357	21	13	VGAGRASET173	20	12
KG01195662	11	8	KG01264100	2	24	RG00039544	13	3	VGAGRASET207	19	90
KG01204300	8	51	KG01264100	4	24	RG00050664	23	17	VGAGRASET207	20	90
KG01204600	25	6	KG01264100	5	24	RG00052288	21	7	VGND98026V	19	22
KG01255261	2	30	KG01264100	7	24	VG10.01.00	19	21	VGND98026V	20	22
KG01255261	5	30	KG01264100	8	24	VG10.01.00	20	21	VGTR2023	30	2
KG01255261	17	30	KG01264100	9	24	VG10.22.284	19	13	VGTR2059	21	12
KG01263700	26	24	KG01264100	10	24	VG10.48.00	19	23	VN17856588	26	31
KG01263700	27	24	KG01264100	11	24	VG10.48.00	20	23	VN17856588	27	31

PENTON-RS-M / Part No Index

Part No.	Page	Pos No	Part No.	Page	Pos No	Part No.	Page	Pos No	Part No.	Page	Pos No
VN17856588	32	21	VN46120092	18	62	VNB1128078	16	9	VNB1773794	15	10
VN30116090	15	8	VN46120092	20	1	VNB1128178	12	8	VNB1774002	26	22
VN30117100	15	21	VN46120100	2	44	VNB1128178	16	8	VNB1774002	27	22
VN30117100	23	6	VN46120100	5	44	VNB1181374	21	3	VNB1774102	26	21
VN30117100	26	12	VN46120100	17	44	VNB1181374	25	4	VNB1774102	27	21
VN30117100	27	12	VN46120100	19	1	VNB1194874	21	2	VNB1838978	15	15
VN31903208	1	40	VN48523001	12	2	VNB1194874	25	2	VNB1839078	15	16
VN31903208	4	40	VN48523001	16	2	VNB1226902	15	11	VNB1885578	30	1
VN31903208	11	40	VN48523002	12	1	VNB1310474	21	4	VNB1953394	23	20
VN31903212	1	41	VN48523002	16	1	VNB1578502	26	5	VNB1998902	25	15
VN31903212	4	41	VN79771219	25	18	VNB1578502	27	5	VNB1999002	25	16
VN31903212	11	41	VN80504001	15	37	VNB1578602	26	4	VNB1999102	25	17
VN38601103	14	7	VN90020550	1	16	VNB1578602	27	4	VNB2024094	15	5
VN38612656	14	8	VN90020550	4	16	VNB1593593	23	10	VNB2024194	15	6
VN38820062	14	5	VN90020550	11	16	VNB1616786	26	7	VNB2024694	15	1
VN38820104	14	4	VN90021368	1	15	VNB1616786	27	7	VNB2068678	26	16
VN38820159	12	95	VN90021368	4	15	VNB1616886	26	6	VNB2068678	27	16
VN38820159	16	95	VN90021368	11	15	VNB1616886	27	6	VNB2068778	7	32
VN38820167	13	4	VN90036164	1	21	VNB1617078	26	20	VNB2068778	9	32
VN40724307	2	35	VN90036164	4	21	VNB1617078	27	20	VNB2134778	23	29
VN40724307	3	35	VN90036164	11	21	VNB1632694	15	18	VNB2333794	25	10
VN40724307	5	35	VN90070526	1	14	VNB1632794	15	17	VNB2333878	26	1
VN40724307	6	35	VN90070526	4	14	VNB1641978	2	39	VNB2333878	27	1
VN40724307	17	35	VN90070526	11	14	VNB1641978	3	39	VNB2417578	23	9
VN40724307	18	35	VN90090191	15	39	VNB1641978	5	39	VNB2417602	23	16
VN41701200	2	36	VNB0682993	23	7	VNB1641978	6	39	VNB2544002	26	36
VN41701200	3	36	VNB0736102	15	7	VNB1641978	17	39	VNB2544002	27	36
VN41701200	5	36	VNB0897393	10	79	VNB1641978	18	39	VNB2544102	26	35
VN41701200	6	36	VNB1060002	25	14	VNB1654465	25	9	VNB2544102	27	35
VN41701200	17	36	VNB1077665	25	5	VNB1654565	25	8	VNB2544378	26	34
VN41701200	18	36	VNB1077702	25	7	VNB1709302	31	19	VNB2544378	27	34
VN46120092	3	62	VNB1082102	25	13	VNB1754278	31	20	VNB2544402	26	32
VN46120092	6	62	VNB1128078	12	9	VNB1761578	15	14	VNB2544402	27	32

Part No.	Page	Pos No	Part No.	Page	Pos No	Part No.	Page	Pos No	Part No.	Page	Pos No
VNB2544502	26	33	VNB4300978	26	26	VNB4353102	4	7	VNB4355078	8	93
VNB2544502	27	33	VNB4300978	27	26	VNB4353102	11	7	VNB4355178	22	66
VNB2836494	32	18	VNB4336774	21	1	VNB4353278	1	10	VNB4355178	24	66
VNB2836894	32	19	VNB4351886	1	1	VNB4353278	4	10	VNB4355278	14	13
VNB2836994	32	20	VNB4351886	4	1	VNB4353278	11	10	VNB4355378	14	16
VNB3145278	15	30	VNB4351886	11	1	VNB4353378	1	11	VNB4356078	13	1
VNB3331194	23	27	VNB4352086	2	28	VNB4353378	4	11	VNB4356278	13	2
VNB3452378	12	6	VNB4352086	5	28	VNB4353378	11	11	VNB4356778	29	1
VNB3452378	16	6	VNB4352086	17	28	VNB4353486	22	60	VNB4356878	29	3
VNB3452478	12	5	VNB4352193	2	29	VNB4353486	24	60	VNB4369693	23	19
VNB3452478	16	5	VNB4352193	5	29	VNB4353586	12	80	VNB4376974	21	8
VNB3620578	12	7	VNB4352193	17	29	VNB4353586	16	80	VNB4377074	21	9
VNB3620578	16	7	VNB4352378	2	40	VNB4353686	12	81	VNB4377274	21	10
VNB3734878	23	24	VNB4352378	5	40	VNB4353686	16	81	VNB4422878	15	9
VNB3861874	21	5	VNB4352378	17	40	VNB4353786	12	82	VNB4470978	12	96
VNB3910902	23	25	VNB4352594	3	45	VNB4353786	16	82	VNB4470978	16	96
VNB3967093	23	5	VNB4352594	6	45	VNB4353878	12	83	VNB4471178	14	6
VNB3967393	23	8	VNB4352594	18	45	VNB4353878	16	83	VNB4471202	1	5
VNB4059402	26	39	VNB4352694	3	46	VNB4353986	12	84	VNB4471202	4	5
VNB4059402	27	39	VNB4352694	6	46	VNB4353986	16	84	VNB4471202	11	5
VNB4061702	26	3	VNB4352694	18	46	VNB4354086	12	85	VNB4471393	3	60
VNB4061702	27	3	VNB4352702	2	34	VNB4354086	16	85	VNB4471393	6	60
VNB4061978	26	40	VNB4352702	5	34	VNB4354186	8	90	VNB4471393	18	60
VNB4061978	27	40	VNB4352702	17	34	VNB4354286	8	91	VNB4471486	3	58
VNB4064578	23	14	VNB4352886	1	22	VNB4354386	7	75	VNB4471486	6	58
VNB4064678	23	15	VNB4352886	4	22	VNB4354386	9	75	VNB4471486	18	58
VNB4064778	23	1	VNB4352886	11	22	VNB4354494	7	74	VNB4471578	1	26
VNB4073178	26	8	VNB4352986	22	59	VNB4354494	9	74	VNB4471578	4	26
VNB4073178	27	8	VNB4352986	24	59	VNB4354694	10	76	VNB4471578	11	26
VNB4255402	25	1	VNB4353002	1	6	VNB4354794	10	77	VNB4471794	22	63
VNB4255502	25	3	VNB4353002	4	6	VNB4354886	10	78	VNB4471794	24	63
VNB4296978	15	28	VNB4353002	11	6	VNB4354994	22	64	VNB4471878	1	27
VNB4297702	15	29	VNB4353102	1	7	VNB4354994	24	64	VNB4471878	4	27

Part No.	Page	Pos No
VNB4471878	11	27
VNB4473986	29	2
VNB4701078	14	12
VNB4701194	7	71
VNB4701194	9	71
VNB4701294	7	72
VNB4701294	9	72
VNB4705194	8	89
VNB4705402	8	55

AANHAALMOMENTEN / TORQUES / ANZUGSMOMENTE / COUPLES DE SERRAGE / PARES DE APRIETE / MOMENTI DI TORSIONE / BINÁRIOS DE APERTO / TILSTRAMMINGSMOMENTER / TILSPÆNDINGSMOMENTER

NL Richtlijnen voor aanhaalmomenten (in Nm) voor zelfborgende moeren, zeskantbouten en moeren.
DE Richtlinien für Anzugsmomente (in Nm) für selbstsichernde Muttern, Sechskantschrauben und -muttern.
ES Directrices para los pares de apriete (en Nm) para las tuercas autoblocantes, los tornillos hexagonales y las tuercas.
IT Direttive per momenti di torsione (espressi in Nm) per dadi autobloccanti, bulloni esagonali e dadi.
NO Retningslinjer for tilstrammingsmomenter (i Nm) for selvlåsende muttere, sekskantbolter og muttere.
EN Guidelines for torques (in Nm) for self-locking nuts, hexagon bolts and nuts.
FR Directives pour les couples de serrage (en Nm) pour écrous á autobloquants, boulons á six pans et écrous.
PT Directrizes para os binários de aperto (em Nm) para porcas autobloqueadoras, parafusos hexagonais e porcas.
DA Retningslinier for tilspændingsmomenter (i Nm) for selvlåsende møtrikker, sekskantbolte og møtrikker.

Kwaliteit / Quality / Qualität / Qualité / Calidad / Qualidade / Qualità / Kvalitet	4.6		8.8		10.9		12.9	
Wrijving / Friction / Reibung / Fricción / Atrito / Attrito / Friktion /Friksjon *	0,10	0,13	0,10	0,13	0,10	0,13	0,10	0,13
Schroefdraad / Thread / Gewinde / Filetage Rosca / Filettatura / Gevind / Skruegjenge								
M5	1,7	2	5	6	7	9	8	10
M6	3	4	9	10	13	15	15	18
M8	8	9	21	25	31	36	36	42
M10	16	19	40	50	60	70	70	85
M12	27	32	70	85	105	120	120	145
M14	42	50	115	135	165	195	195	230
M16	65	76	175	210	260	300	300	350
M18	90	110	250	290	350	420	410	490
M20	125	150	350	420	500	600	580	700
M22	170	200	470	560	670	800	780	930
M24	210	250	600	710	860	1020	1000	1180

* **NL** De wrijvingscoëfficiënt van 0,10 geldt voor geoliede plaat, gietijzer, geharde vlakken, vette schroefdraad, etc. De hogere waarde van 0,13 geldt voor een droge plaat. Uitzonderingen op deze tabel zijn vermeld in het onderdelen- en/of instructieboek. Aanhaalmomenten voor bouten en moeren met gekartelde onderkant, zoals Tensilock en Whizlock, 10% extra.

* **EN** The friction coefficient of 0.10 applies to oiled sheet, cast iron, hardened surfaces, greasy thread, etc. The higher value of 0.13 applies to dry sheet. Exceptions to this table are stated in the parts- and /or instruction manual. Torques for bolts and nuts with a knurled underside, like Tensilock and Whizlock, 10% extra.

* **DE** Der Reibungskoeffizient von 0,10 gilt für geölte Flächen, Gußeisen, gehärtete Flächen, gefettetes Gewinde usw. Der höhere Wert von 0,13 gilt für trockene Flächen. Ausnahmen zu dieser Tabelle sind im Ersatzteilhft und/oder in der Betriebsanleitung. Anzugsmomente für Schrauben und Muttern mit gerändelter Unterseite, wie Tensilock und Whizlock, zuzüglich 10% extra.

* **FR** Le coefficient de frottement de 0,10 s'applique aux surfaces huilées, à la fonte, aux surfaces trempées, aux filetages graissés etc. Le coefficient de 0,13 aux surfaces sèches. Les exceptions à se tableau sont mentionnées dans la nomenclature des pièces et/ou dans le manuel d'emploi. Ajoutez 10% pour les boulons et écrous á partie inférieure crénelée, comme les Tensilock et les Whizlock.

* **ES** El coeficiente de fricción de 0,10 es indicado para planchas lubricadas, hierro fundido, superficies endurecidas, rosca grasienta, etc. El valor más alto de 0,13 es para planchas secas. Las excepciones a este cuadro se mencionan en el libro de repuestos y/o manual de instrucciones. Los pares de apriete para tonillos y tuercas con cara inferior dentada, como los Tensilock y Whizlock, 10% extra.

* **PT** O coeficiente de atrito de 0.10 aplica-se às superficies olcadas, ao ferro fundodo,às superficies temperadas, às roscas emassadas etc. O coeficiente de 0.13 às superficies secas. As excepções a este quadro estão mencionadas na nomenclatura das peças e/ou no manual de instruções. Os binarios de aperto para porcas e parafusos cujas bases sejam serradas (Tensilock, Whizlock) devem ser aumentados em 10%.

* **IT** Il coefficiente di frizione pari a 0,10 si riferisce a superfici oliate, alla ghisa, a superfici temprate, a filettature spesse ecc. Il valore più alto, npari a 0,13, si riferisce a superfici asciutte. Tutte le eccezioni a quanto riportato in questa tabella, si trovano nel libretto dei pezzi o nel libretto delle istruzioni. I momenti torcenti per bulloni e dadi la cui parte inferiore è zigrinata, come i Tensilock (K 100) e Whizlock, sono superiori del 10%.

* **DA** Friktionskoefficienten på 0,10 gælder for smurte flader, støbejern, hærdede overflader, fedtholdige gevind etc. Den højere værdi på 0,13 gælder for tørre flader. Undtagelser til tabelllen er angivet i reservedels- og/eller instruktionsbog. Når det drejer sig om momenter for bolte og møtrikkers med en riflet underside, som Tensilock (K100) og Whizlock, skal der tilføjes 10% ekstra.

* **NO** Friksjonskoeffisenten på 0,10 gjelder for smurt plate, støpejern, herdete flater, innfettete gjenger etc. Den høyere verdien på 0,13 gjelder for tørr plate. Unntak fra denne tabellen er angitt i deleboken og/eller i instruksjonsboken. Tiltrekkingsmomenter for skruer og mutre med riflet underkant, som Tensilock (K100) og Whizlock 10% tillegg.

VRIDMOMENT / MOMENTY OBROTOWE / UTAHOVACí MOMENTY / МОМЕНТ ЗАТЯГИВАНИЯ / PRIVIJALNI MOMENTI / MEGHÚZÁSI NYOMATÉKOK

SV Anvisningar för vridmoment (i Nm) för självlåsande muttrar, sexkantiga bultar och muttrar.

CS Směrnice pro utahovací momenty (v Nm) pro samosvorné matice, šrouby a matice s šestihran hlavou

SL Navodila za privijalne (navorne) momente (v Nm) za matice in vijake.

PL Wytyczne dotyczące momentów obrotowych (w Nm) nakrętek samozabezpieczających, śrub z łbem sześciokątnym i nakrętek.

RU Указания для моментов затягивая (в Нm) для самоблокиоующихся гаек, шестигранных болтов и гаек.

HU Előírt meghúzási nyomatékok (Nm-ben) az önzáró anyákhoz, hatlapfejű csavarokhoz és anyákhoz.

Kvalitet / Jakość /Jakost / Качество / Kvaliteta / Minőség	4.6		8.8		10.9		12.9	
Friktion / Tarcie / Třeni / Трение / Trenje / Súrlódás *	0,10	0,13	0,10	0,13	0,10	0,13	0,10	0,13
Gänga / Gwint / Závit / Резьба Navoj / Menet								
M5	1,7	2	5	6	7	9	8	10
M6	3	4	9	10	13	15	15	18
M8	8	9	21	25	31	36	36	42
M10	16	19	40	50	60	70	70	85
M12	27	32	70	85	105	120	120	145
M14	42	50	115	135	165	195	195	230
M16	65	76	175	210	260	300	300	350
M18	90	110	250	290	350	420	410	490
M20	125	150	350	420	500	600	580	700
M22	170	200	470	560	670	800	780	930
M24	210	250	600	710	860	1020	1000	1180

* **SV** Friktionskoefficienten 0,10 gäller oljad plåt, gjutjärn, härdade ytor, smorda gängor etc. Det högre värdet 0,13 gäller torr plåt. Undantag från denna tabell anges i reservdels- och/eller instruktionsboken. Åtdragningsmoment för räfflade bultar och muttar, som Tensilock och Whizlock 10% extra.

* **PL** Współczynnik tarcia 0,10 dotyczy płyty oliwionej, żeliwa, powierzchni hartowanych, nasmarowanych gwintów, itp. Wyższy współczynnik 0,13 dotyczy płyty suchej. Wyjątki od niniejszej tabeli podano w katalogu części i/lub instrukcji. Momenty obrotowe zwiększają się o dodatkowe 10% w przypadku śrub i nakrętek z radełkowanym spodem, jak na prykład, Tensilock (K100) o Whizlock.

* **CS** Koeficient třeni 0.10 platí pro naolejovaný plech, litinu, kalené povrchy, namazaný závit a tak dále. Vyšší hodnota 0.13 platí pro suchý plech. Výjimky z této tabulky jsou uvedeny v seznamu náhradních dílù a/nebo v provozním návodu. Utahovací momenty pro šrouby a matice s rýhovanou spodní stranou 10% navíc, jako např. Tensilock (K100), Whizlock.

* **RU** Коэффициент трения в 0,10 относится к смазанным плитам, чугуну, затвердевшим поверхностям резьбе с нанесенной смазкой и т.д. Более высокое значение в 0,13 относится к сухим плитам. Исключения для данной таблицы указаны в брошюре с описанием рабочих деталей и/или инструкции по зксплуатации. Моменты затягивания для болтов и гаек с зазубренной стороной выше на 10% Для таких как, Tensilock (k 100) и Whizlock.

* **SL** Koeficient trenja 0,10 velja za naoljene površine, litino, kovane površine, namazane navoje itd. Višja vrednost 0,13 velja za suhe površine. Izjeme v tej tabeli so v zvezku rezervnih delov ali pa v navodilu o uporabi navedene. Navornim momentom za vijake in matice z naribano spodnjo površino, kot so Tensilock (K100) in Whizlock, dodamo 10%.

* **HU** A 0,10 súrlódási tényezõ az olajazott lemezekre, öntöttvasra, edzett felületekre, zsírozott menetre, stb alkalmazható. A 0,13 asmagasabb érték a száraz lemezekre alkalmazható. E táblázat alól kivételt képezõ tételek az alkatrészeknél és/vagy a gépkönyvekben vannak felsorolva. A meghúzási nyomaték az alsó peremen bordázott csavarok és anyák esetében 10%-kal nagyobb, pl. Tensilock (K100) és Whizlock.

PENTON-RS-M

01001 < Mach. ID <=

Kverneland Group Nieuw-Vennep
Kverneland Group Nieuw-Vennep BV
Hoofdweg 1278
2153 LR Nieuw-Vennep
Netherlands
+31 252 662244
+31 252 662173

© Kverneland Group

All rights reserved. No parts of this book may be reproduced, stored in a database or retrieval system, or published in any form or in any way, electronically, mechanically, optically, by print, photo print, microfilm (including micro and macro fiche), or any other means, including all video and CD systems, without prior written permission from the publisher.

Print date: 2010-05-21