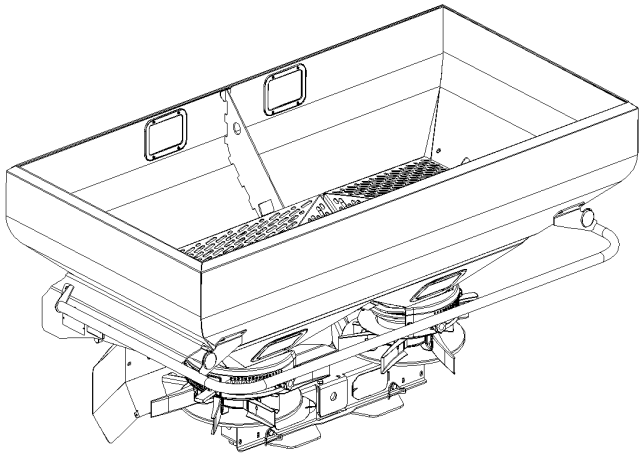

EXACTA-CL

Spare Parts Manual

Article number:	VN70009954-3
Language:	EN
Production year (from):	2011
Prod. Series nr (from):	VN21003
02236 < Mach. ID <=	

EXACTA-CL / Table of Contents

PosNo.	Assembly group	Page
1	FRAME	1
2	PROTECTION	2
3	HOPPER AND SIEVE	3
4	DRIVE	4
5	DOSAGE	5
6	DISC, BROADCASTER	6
7	CONTROL, HYDRAULIC	7
8	REMOTE II	8
8	REMOTE II	9
12	UNIV. JOINT SHAFT	10
13	DECAL SCHEMATIC	11
13	DECAL SCHEMATIC	12
99	ACCESSORIES	13
99	HOPPER EXTENSION	14
99	TARPAULIN	15
99	LIGHTING	16
99	HOPPER EMPTYING SET	17
99	LADDERSET	18
99	CALIBRATION CONTAINER	19
99	BOUNDARY SPREADING PLATE	20
99	28 MTR KIT	21
99	TRAMLINE CYLINDER	22
99	TRIMFLOW	23
99	FEELER GAUGE	24
99	SPREADING PATTERN CONTROLSET	25
99	HOSE SET	26
99	2X2 DIRECTION TAP SET	27
99	SPREADING DISC RPM SENSOR SET	28
99	WHEELRINGS	29
99	SENSORS AND CABLES	30
99	RADARCABLES	31

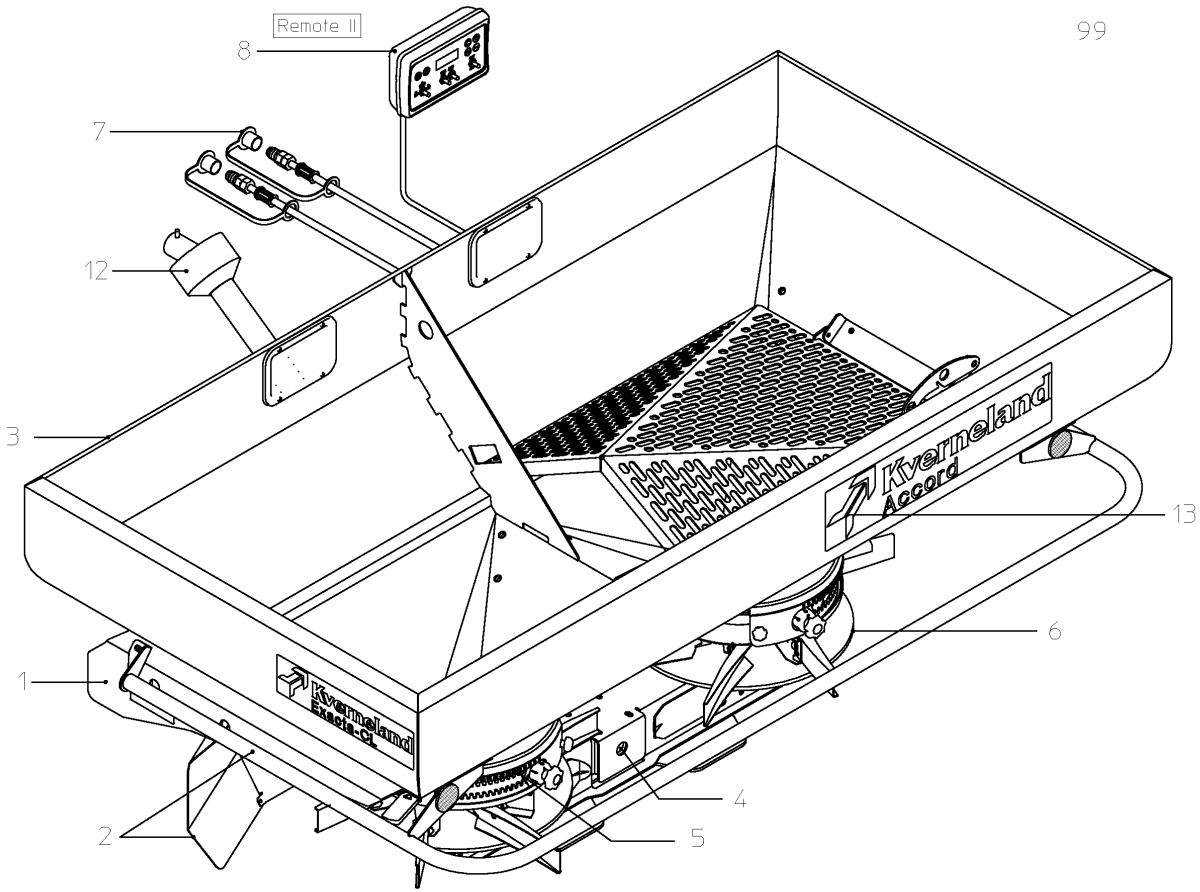

EXACTA-CL / FRAME

PosNo.	Part No.	Qty.
1	VNB4494094	1
2	VNB1599794	1
3	VNB0897393	1
4	VNB0870178	1
5	VNB4077402	1
6	KG00500900	1
7	KG01070100	2
8	VNB2332694	1
9	KG01901600	2
10	KG00501100	1
11	VN37601011	2
12	VNB1599994	2
13	VNB0765193	2

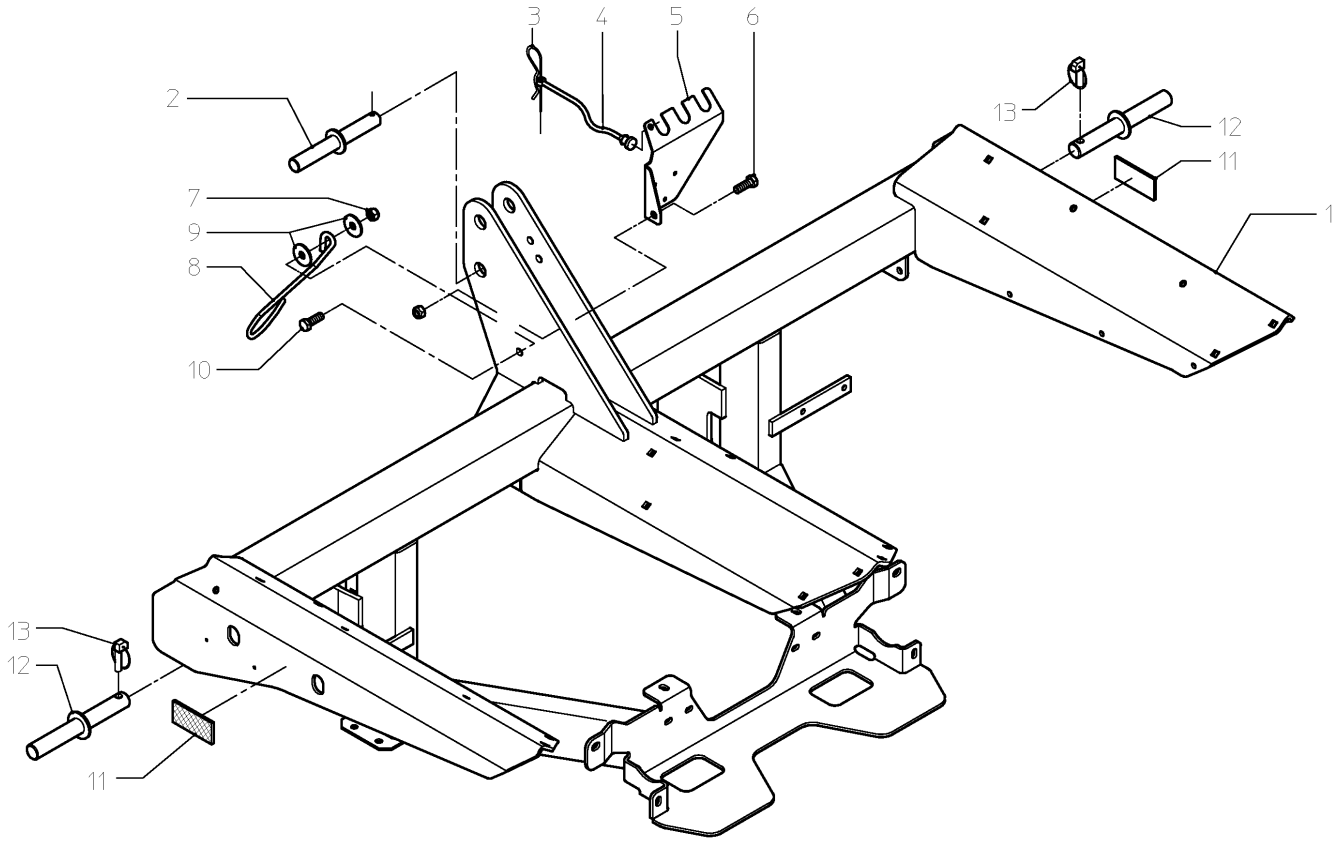

ROM_VN20602_N01

EXACTA-CL / PROTECTION

PosNo.	Part No.	Qty.
1	VNB4241402	1
2	VN30128821	4
3	KG01901400	4
4	KG01069900	4
5	KG00494900	4
6	KG01059600	4
7	VNB4629994	1
8	KG00739400	4
9	KG01263900	4
10	KG01059700	4
11	KG00498700	4
12	KG01264000	10
13	KG01070000	6
14	VNB4249994	1
15	VNB4253078	2
16	VNB4650394	2
17	KG00498800	2
18	VN37601015	2

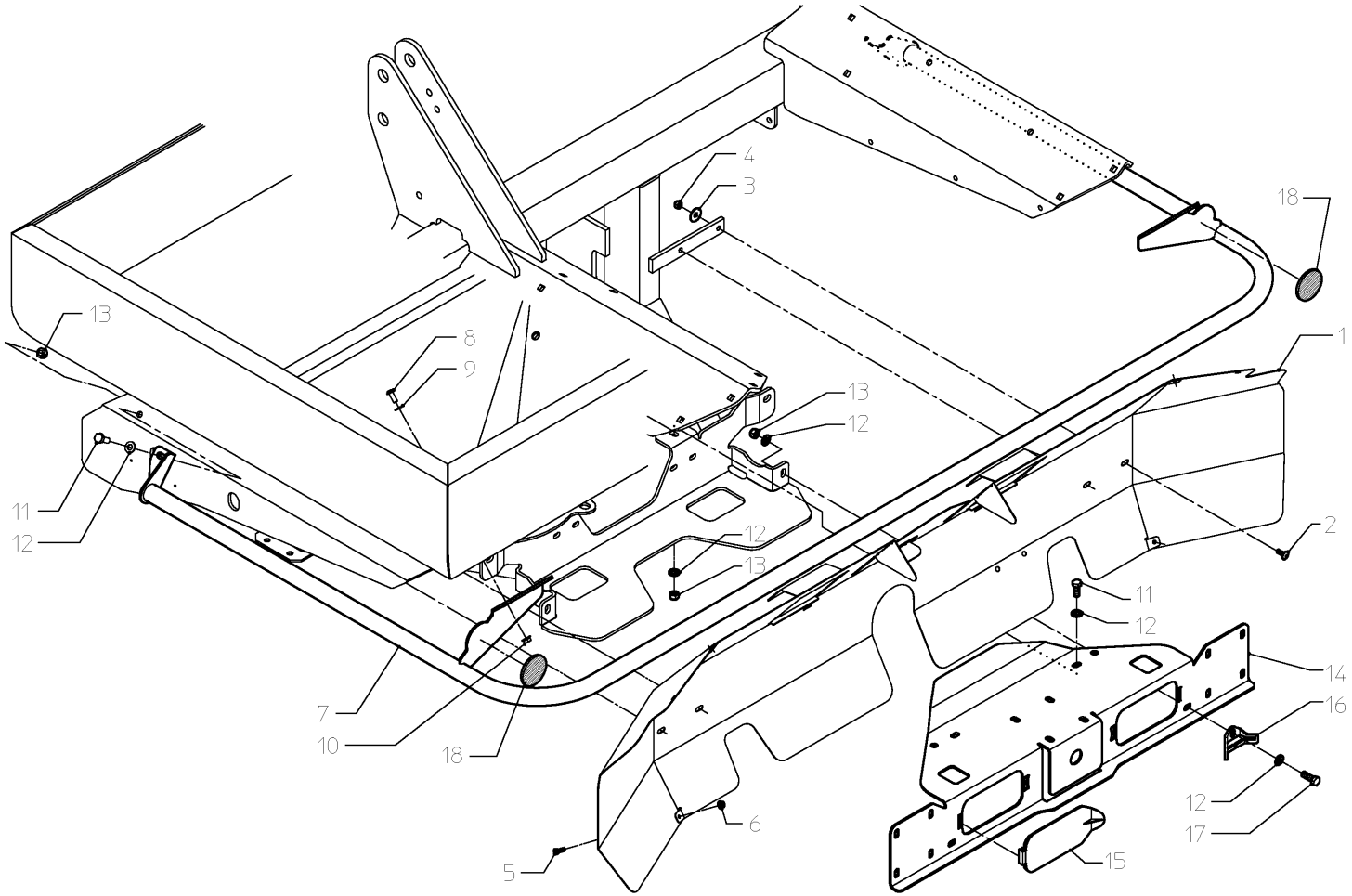

ROM_VN20602_N02

EXACTA-CL / HOPPER AND SIEVE

PosNo.	Part No.	Qty.
1	VNB4260994	1
2	VNB4270094	2
3	VNB4270394	1
4	VNB4270494	1
5	KG00498700	4
6	KG01264000	4
7	KG01070000	4
8	VN30117100	16
9	KG01053800	16
10	KG00654400	16
11	VNB2068778	4
12	VNB2760978	4
13	VN30143310	16
14	VNB4319078	2
16	VNB4627794	2
17	KG00497100	6
18	KG01901400	6
19	VNB4270602	6
20	KG01069900	6
21	VNB4627578	2
22	KG00870000	6
23	KG01069800	6

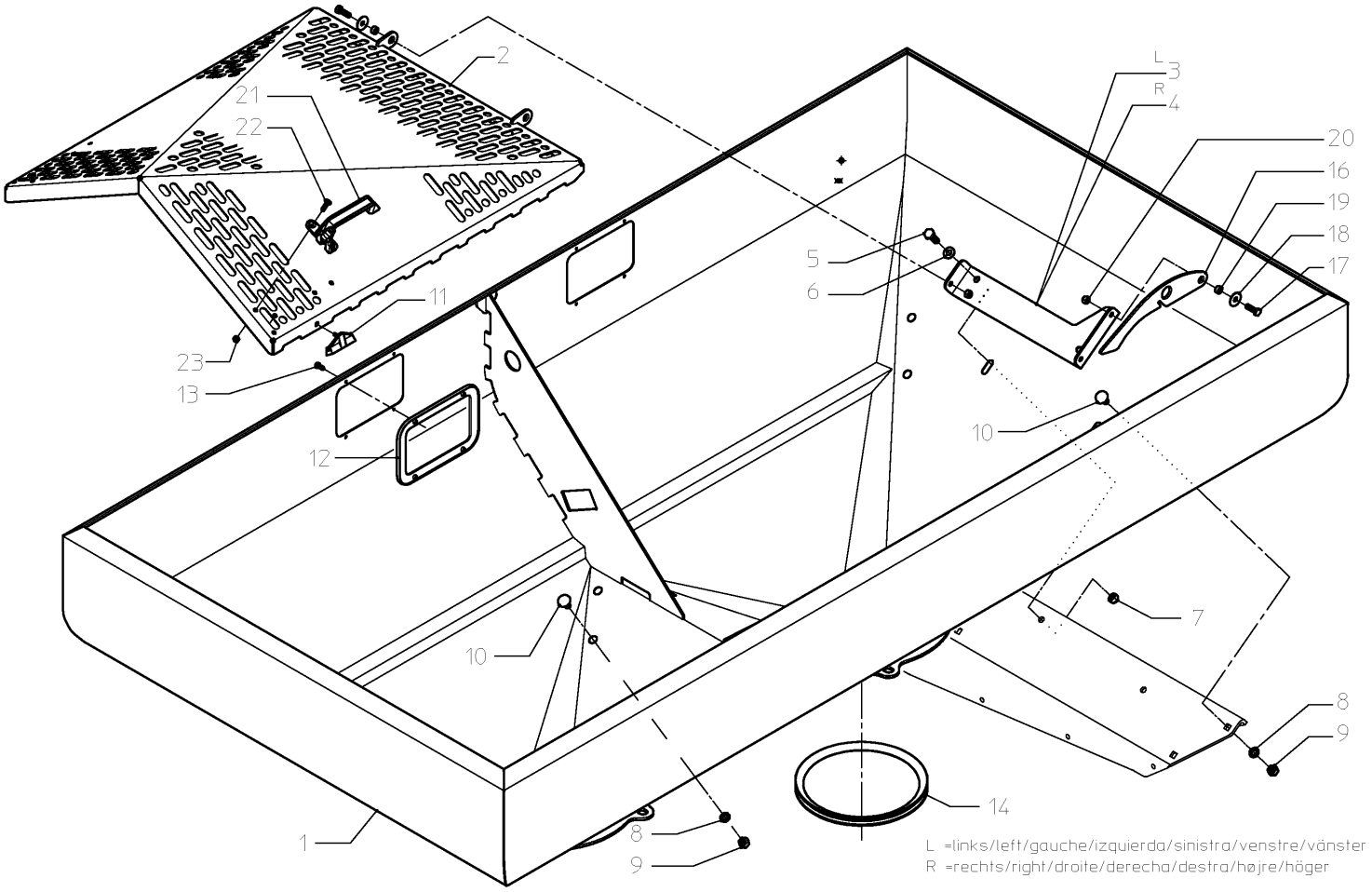

ROM_VN20602_N03

EXACTA-CL / DRIVE

PosNo.	Part No.	Qty.
1	VNB4064778	1
2	KG00397500	4
3	KG01264000	24
4	KG01070000	12
5	VNB3967093	2
7	VNB0682993	2
8	VNB3967393	2
9	VNB2417578	2
10	VNB1593593	2
11	KG00497200	6
12	KG01263900	6
13	KG01069900	12
14	VNB4064578	1
15	VNB4064678	1
16	VNB2417602	12
17	RG00050664	6
19	VNB4369693	2
23	KG00397400	8
24	VNB3734878	3
25	VNB3910902	2
26	KG01192162	4
27	VNB4702278	1

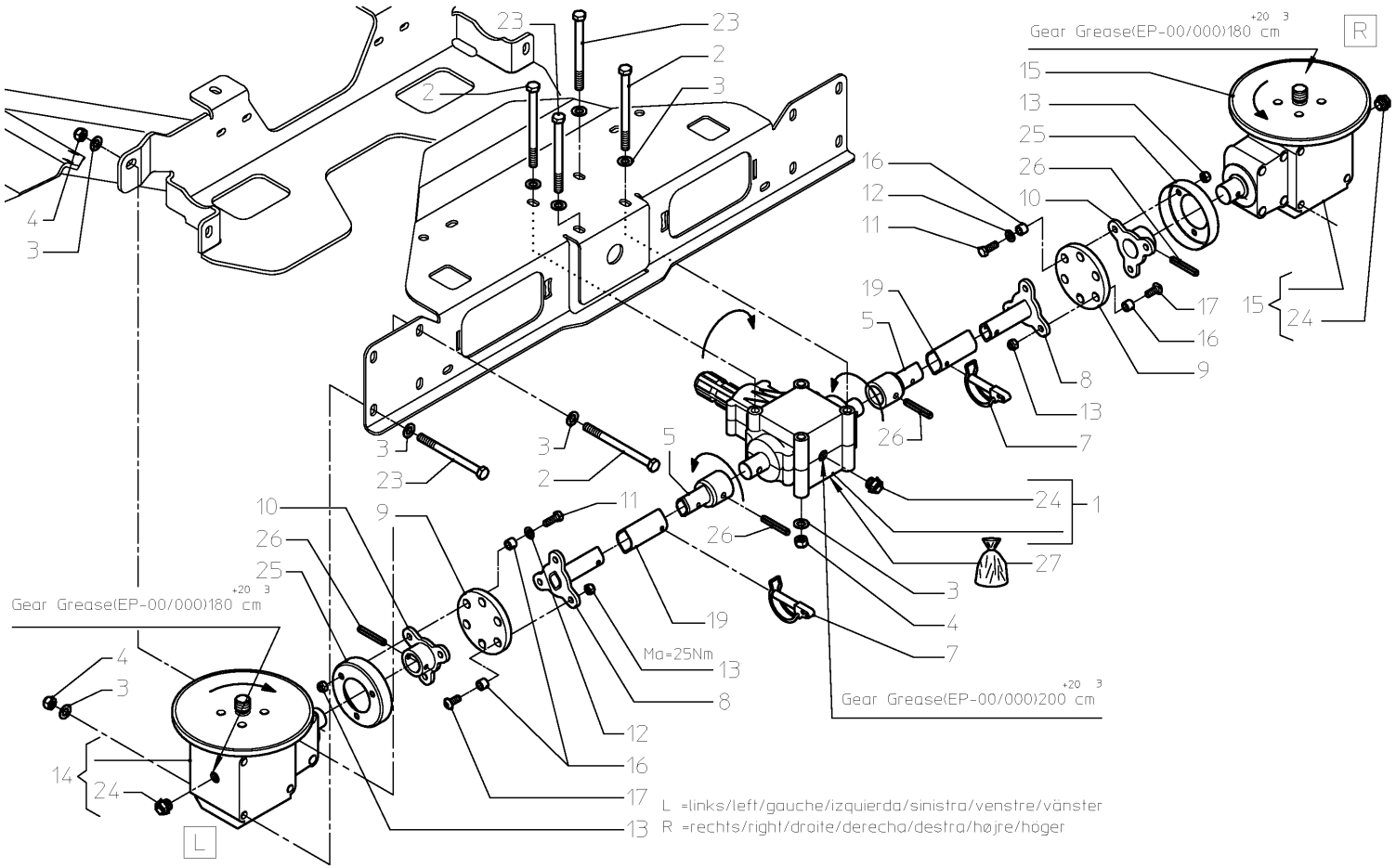

ROM_VN20602_N04

EXACTA-CL / DOSAGE

PosNo.	Part No.	Qty.
1	VNB3317278	2
2	KG00738100	6
3	VNB4061702	2
4	VNB3969702	1
5	VNB3969802	1
6	VNB3957302	1
7	VNB3957402	1
8	VNB4073178	2
9	KG00870200	6
10	KG01069800	18
11	KG00499500	8
12	VN30117100	8
13	KG01053800	16
14	KG01044900	8
15	VNB4042702	16
16	VNB3967598	1
17	VNB3967698	1
20	VNB1617078	2
21	VNB4335902	2
23	KG00680900	8
25	KG01069700	8
26	VNB3957502	2
27	KG00870000	6
28	VNB3559902	4
29	VNB4042498	1
30	VNB4042598	1
31	VNB4059402	2
32	VNB4061978	2
34	VNB3958278	4
37	VNB3970002	4
38	KG00747600	8
39	VNB4077378	6

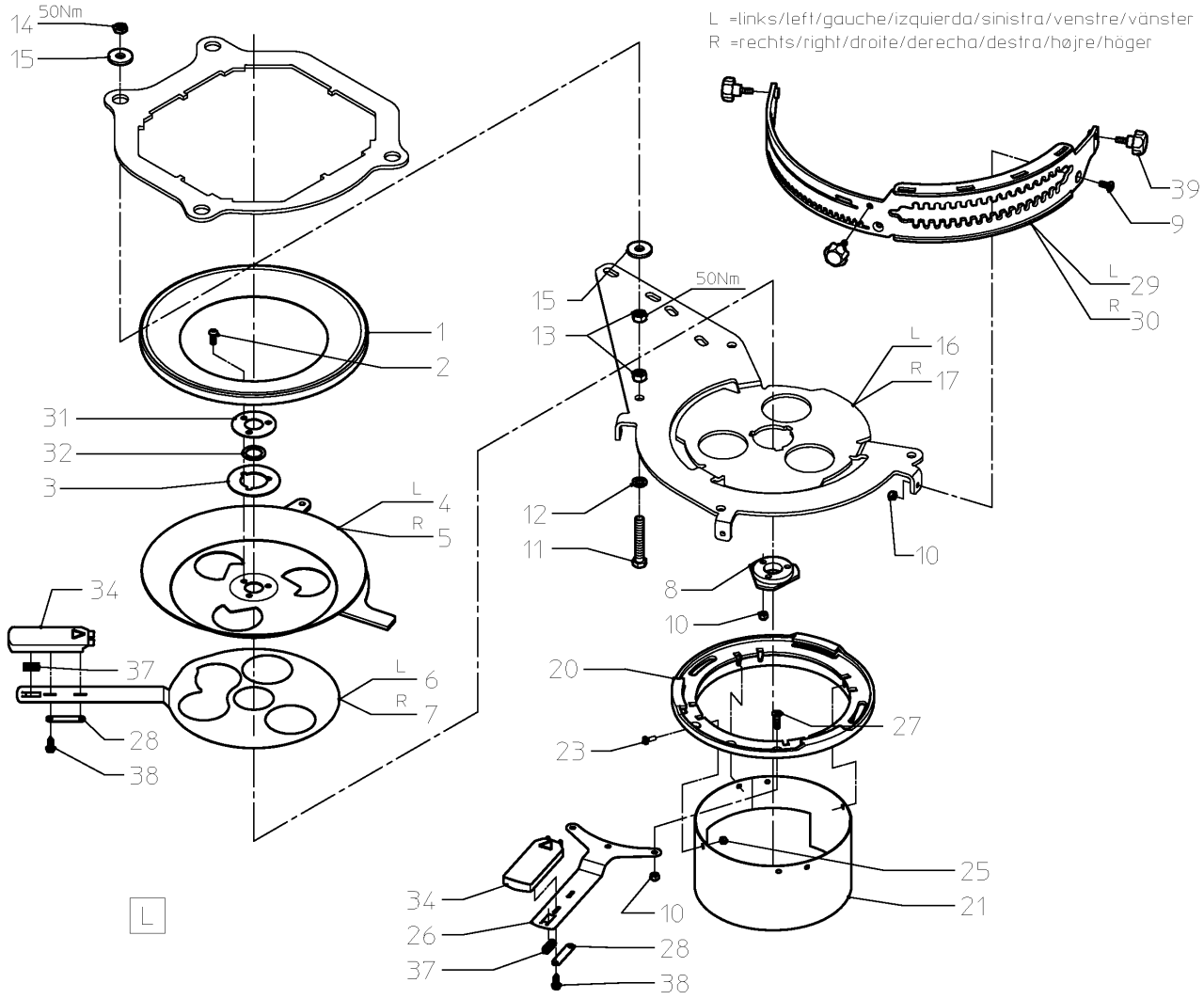

ROM_VN20602_N05

EXACTA-CL / DISC, BROADCASTER

PosNo.	Part No.	Qty.
1	VNB4255402	1
2	VNB1194874	1
3	VNB4255502	1
4	VNB1181374	1
5	VNB1077665	2
6	KG01204600	4
7	VNB1077702	2
8	VNB3325865	1
9	VNB3325965	1
10	VNB2333794	2
11	KG00565700	2
12	KG01069900	2
13	VNB1082102	12
14	VNB1060002	4
15	VNB1998902	4
16	VNB1999002	4
17	VNB1999102	4
18	VN79771219	1

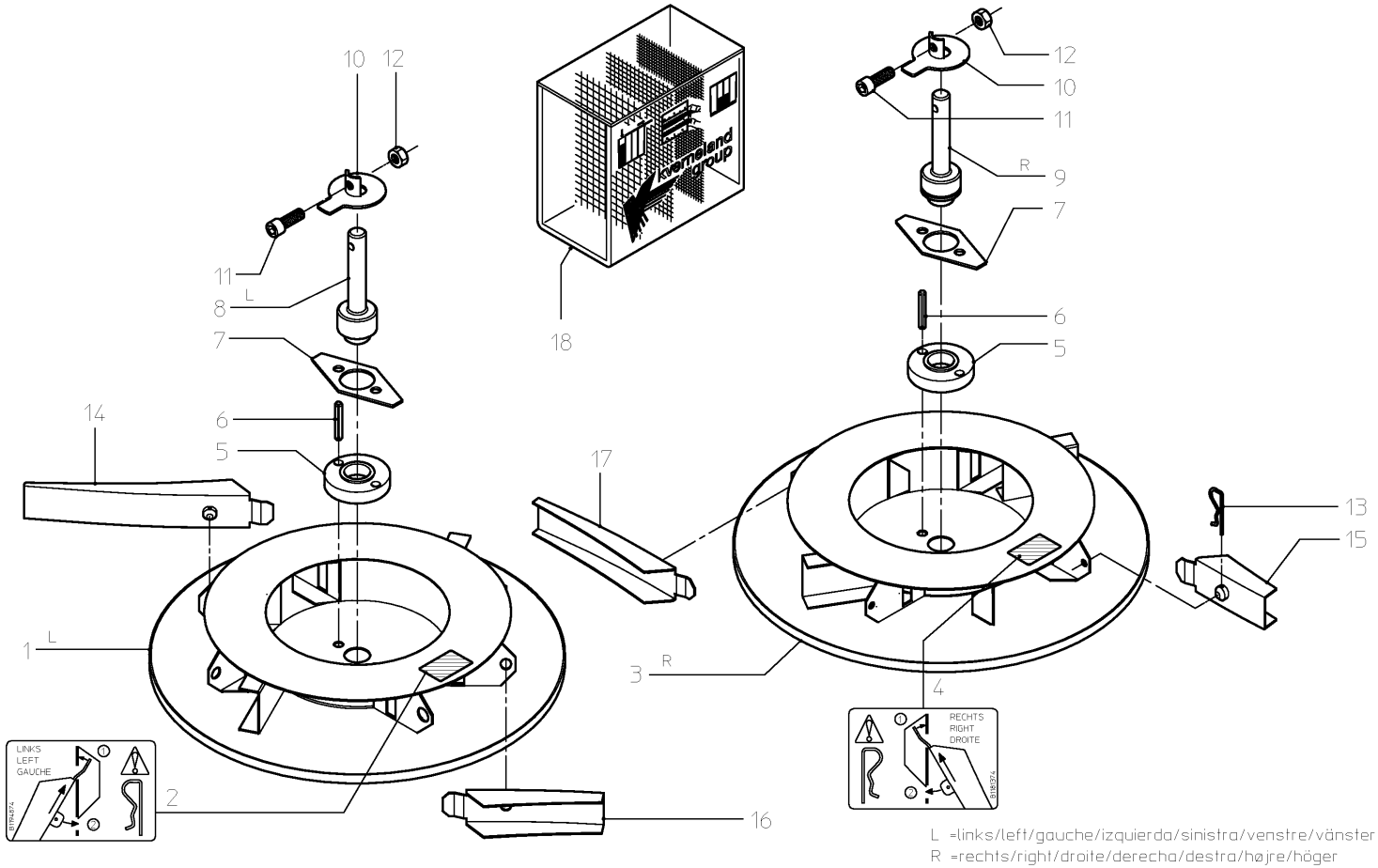

ROM_VN20602_N06

EXACTA-CL / CONTROL, HYDRAULIC

PosNo.	Part No.	Qty.
1	VNB3322494	2
2	VNB4423078	2
3	VNB4808602	2
4	VNB4808702	2
5	KG01069900	4
6	KG00498700	4
7	KG01901500	4
8	KG01070000	4
9	VNB4296978	4
10	VNB4297702	2
11	VN80504001	4
12	VNB4253278	2
13	KG01901300	2
14	AC351803	1
16	RG00048610	2
17	VN38854581	2
18	VNB4254894	2
19	VNB2003302	2
20	VNB3957778	2
21	VNB3957678	2
22	VNB4292878	2
23	VNB3957878	1
24	VNB3957978	1
25	VNB3958078	1
26	VNB3958178	1
27	VNB4292978	2
28	KG00803400	4
29	VNB3962278	1
30	VNB3962378	1
31	KG00495200	2
32	VNB4239578	2
33	KG01069800	2
34	KG00679700	2
35	KG01901100	2
36	KG01264000	2
37	VNB4743202	2

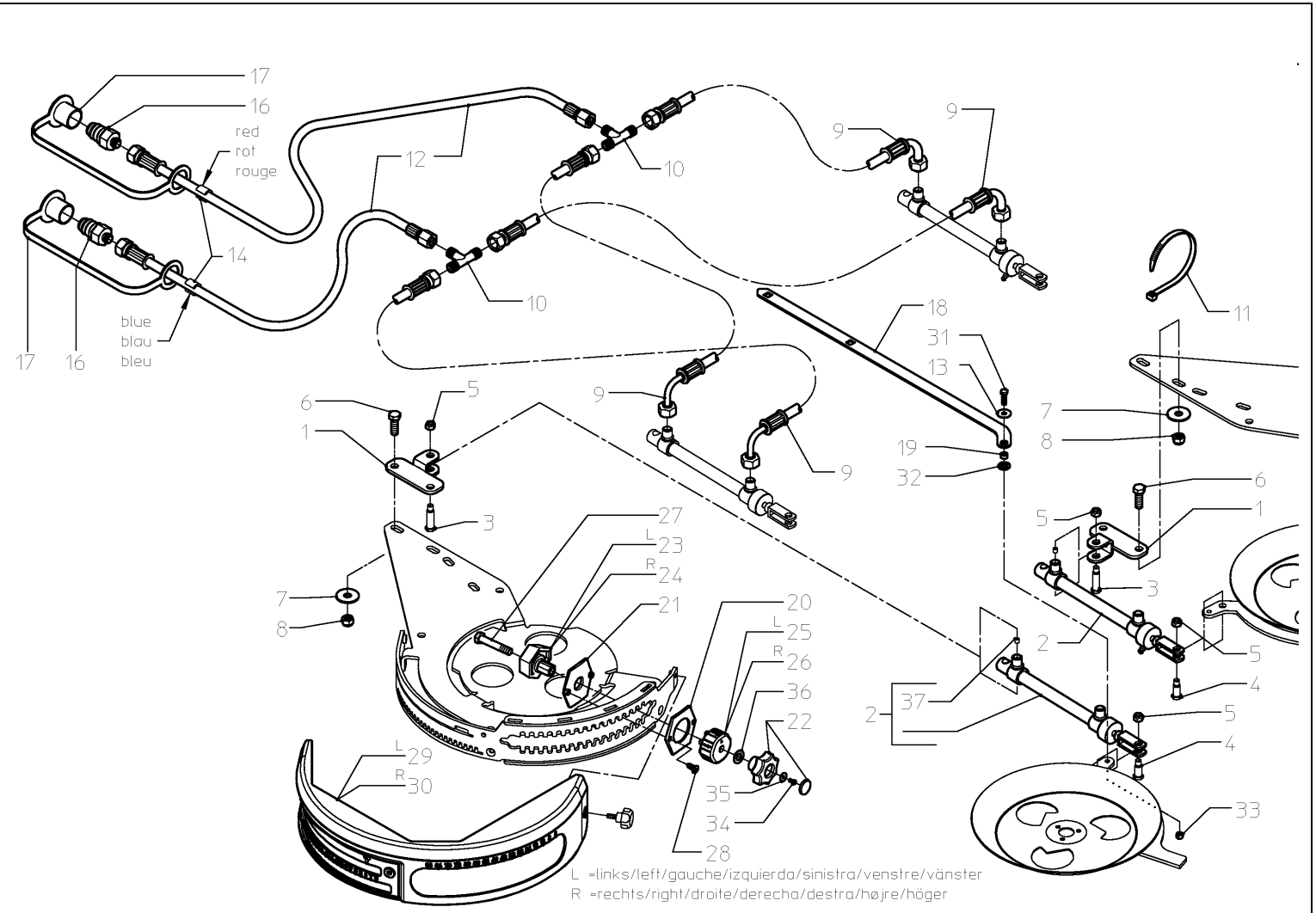

ROM_VN20603_P07

EXACTA-CL / REMOTE II

PosNo.	Part No.	Qty.
1	VNB0563773	1
2	VNB0548173	1
3	VNB0374873	1
4	VNB3872902	1

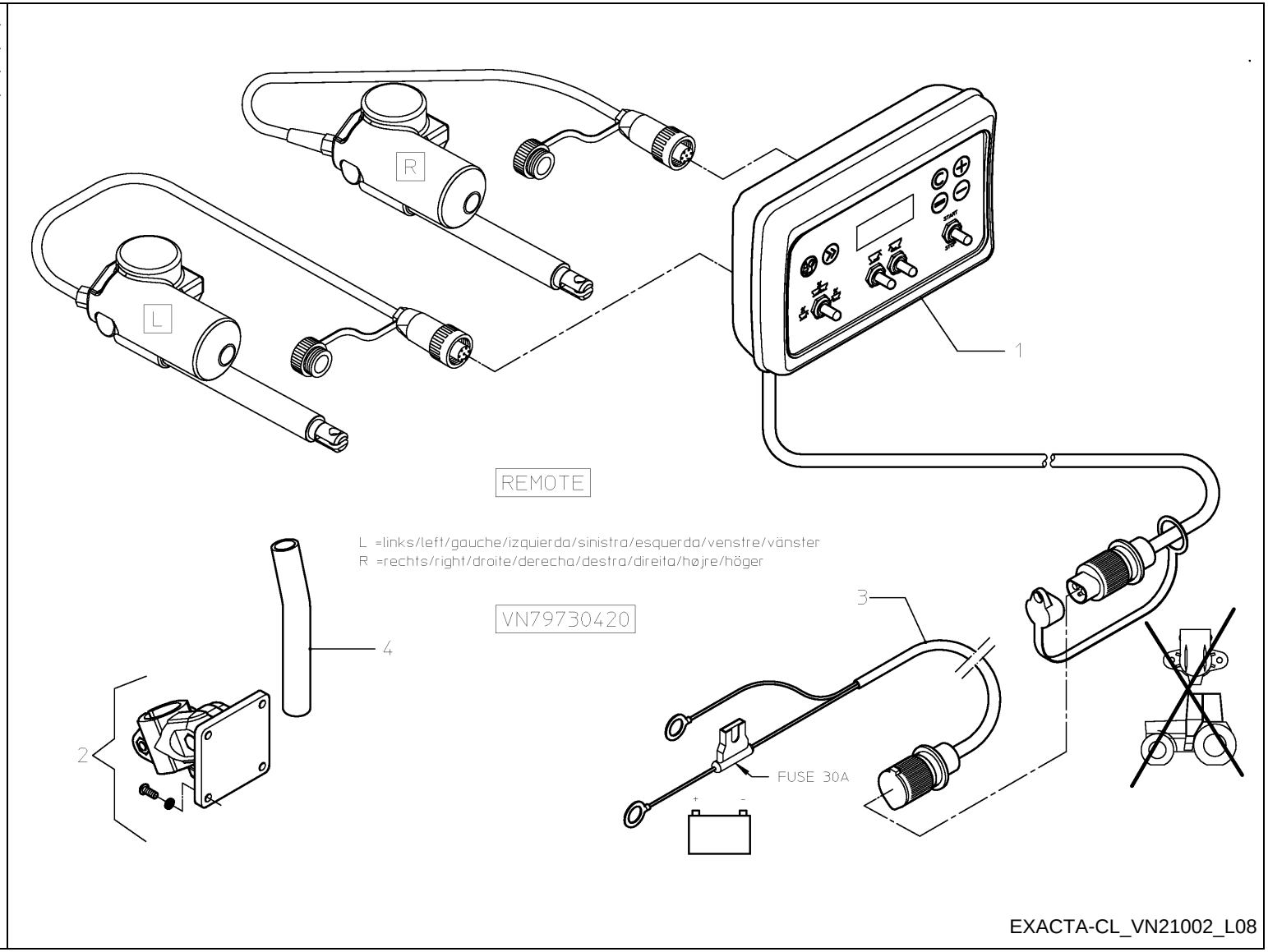

EXACTA-CL_VN21002_L08

EXACTA-CL / REMOTE II

PosNo.	Part No.	Qty.
1	VNB3322594	2
2	VNB3317378	2
3	VN36107317	2
4	KG00945900	2
5	VN30130800	2
6	VNB4808502	4
7	KG01069900	4
8	KG00498700	4
9	KG01901500	4
10	KG01070000	4
11	VN80504001	2
13	VNB4063078	1
14	VNB4063178	1
17	VNB0550373	2
18	VNB2235978	8
19	VNB0566173	1

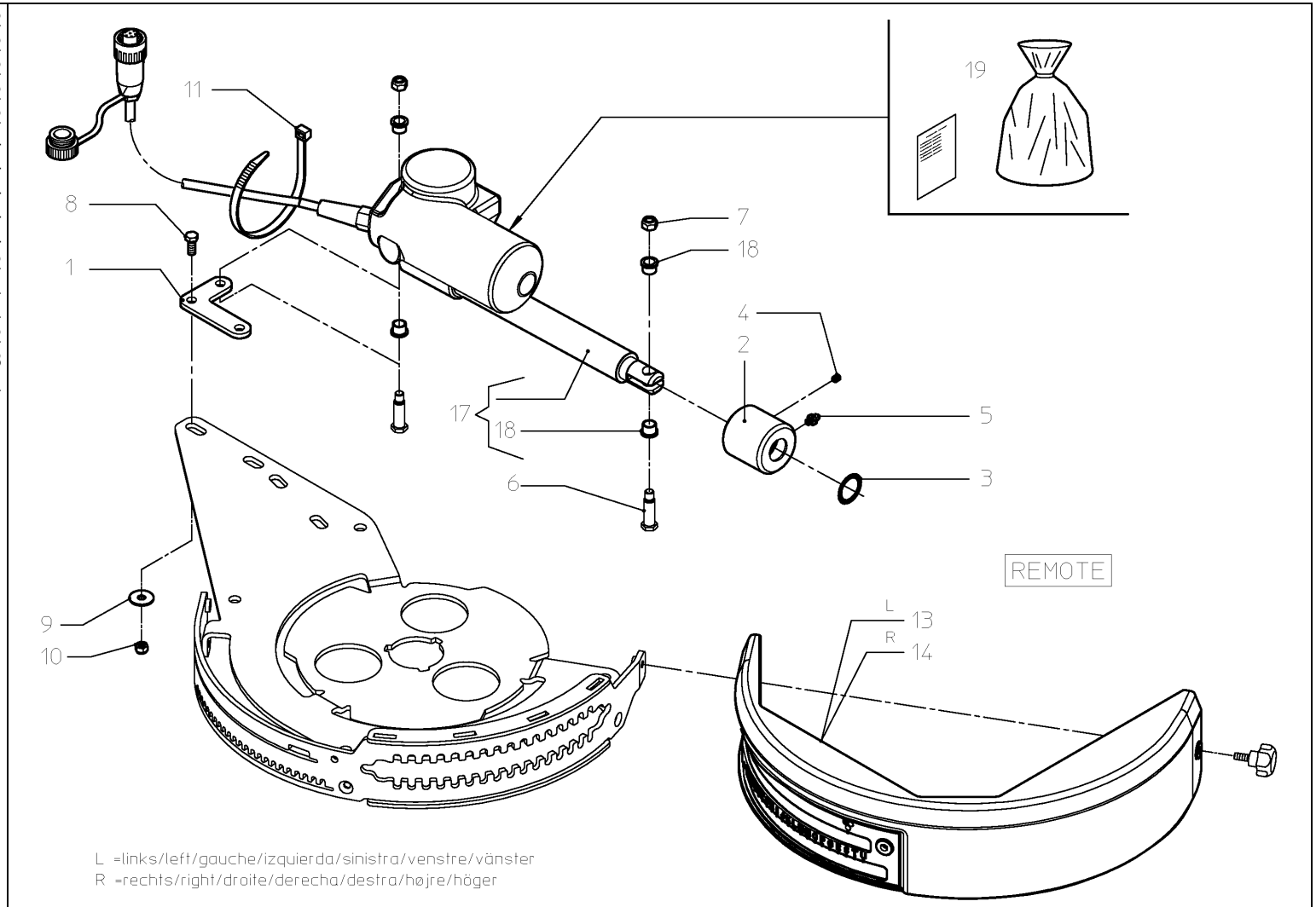

EXACTA-CL_VN21003_M09

EXACTA-CL / UNIV. JOINT SHAFT

PosNo.	Part No.	Qty.
1	VN46120092	1
4	VG85.005	1
5	VG85.004	1
11	VG10.83.40	1
12	VGAGRASET173	1
13	VG56.117.19	1
21	VG10.01.00	2
22	VGND98026V	2
23	VG10.48.00	1
24	KG01192062	2
25	VG75.02.15	1
26	VG75.06.15	1
27	VG10.49.00	1
51	VG83.09.01	2
52	VG85.05.06	2
53	VG365305	2
54	VG83.10.03	2
55	VG82.36.03	2
90	VGAGRASET207	1

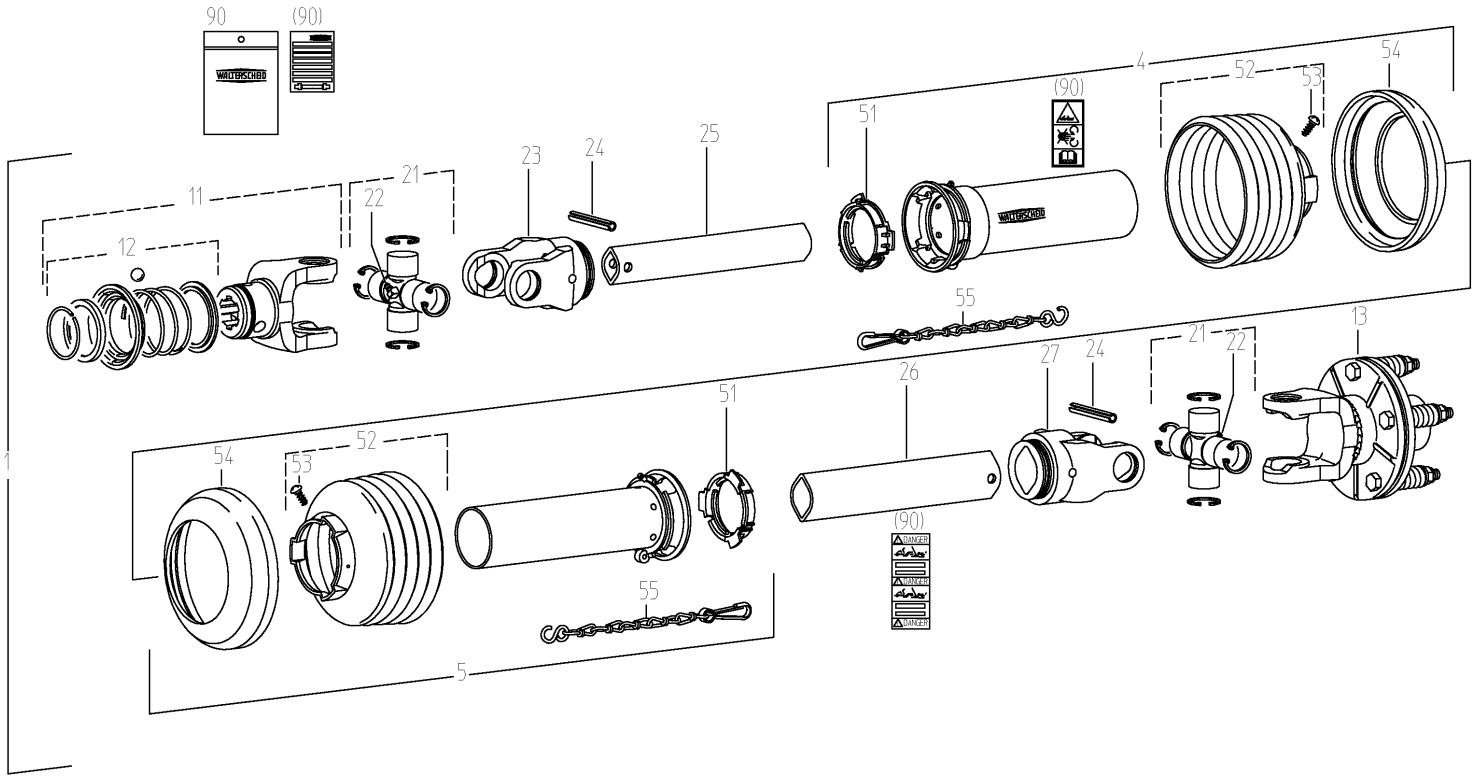

ROM_VN20602_C01

EXACTA-CL / DECAL SCHEMATIC

PosNo.	Part No.	Qty.
1	VNB3977774	1
2	VNB4494574	1
3	VNB4377074	1
4	VNB4377274	2
5	VNB4376974	2
6	VNB4377174	1
7	VNB1310474	1
8	VNB4105374	2
9	VNB4494274	2
10	VNB1194874	1
11	VNB1181374	1
12	VNB4426274	1
18	KK742357	1

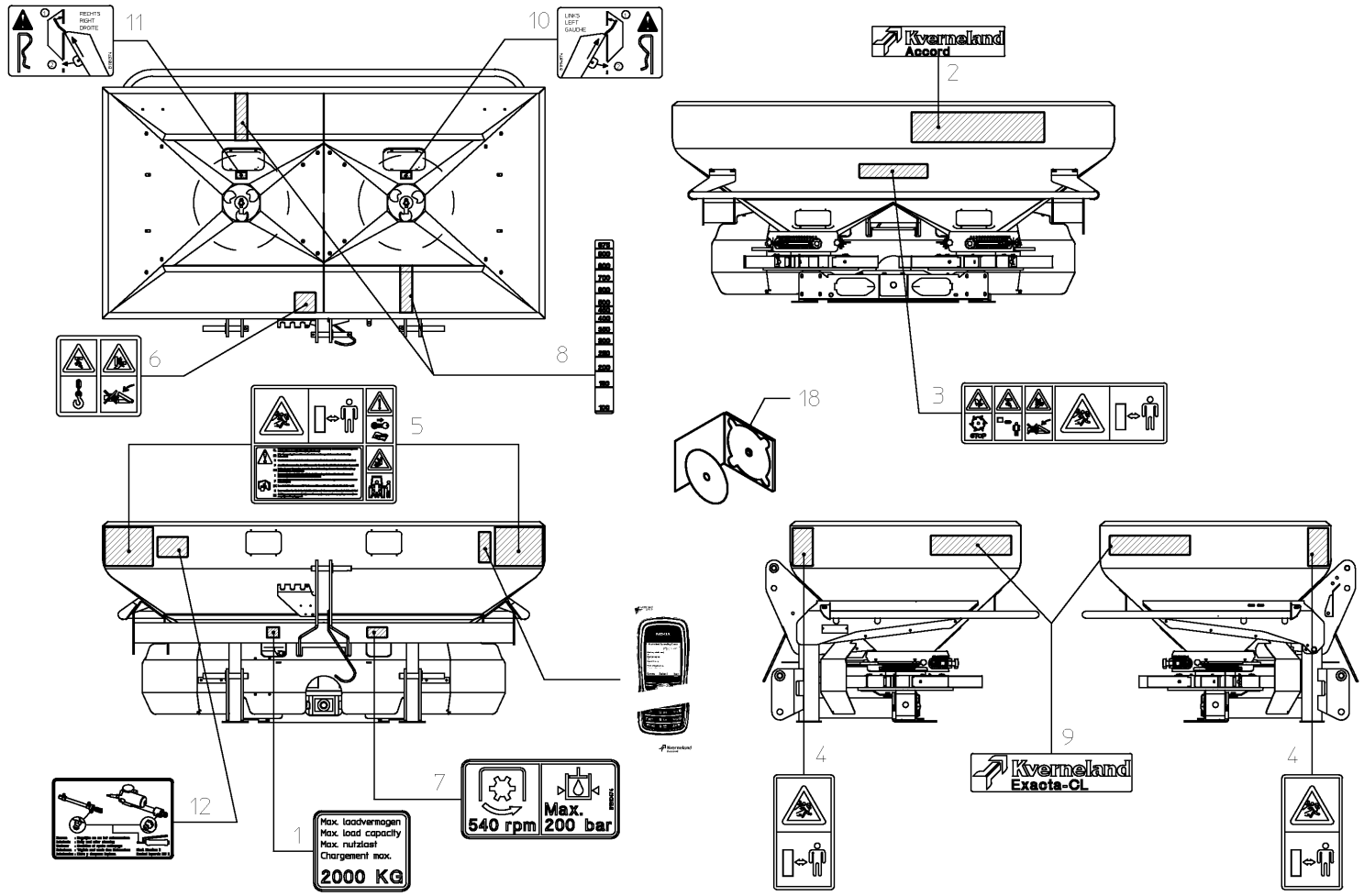

EXACTA-CL_VN21002_C12

EXACTA-CL / DECAL SCHEMATIC

PosNo.	Part No.	Qty.
13	VNB4377474	1
14	VNB4377574	1
15	VNB4377674	1
16	VNB4377774	1

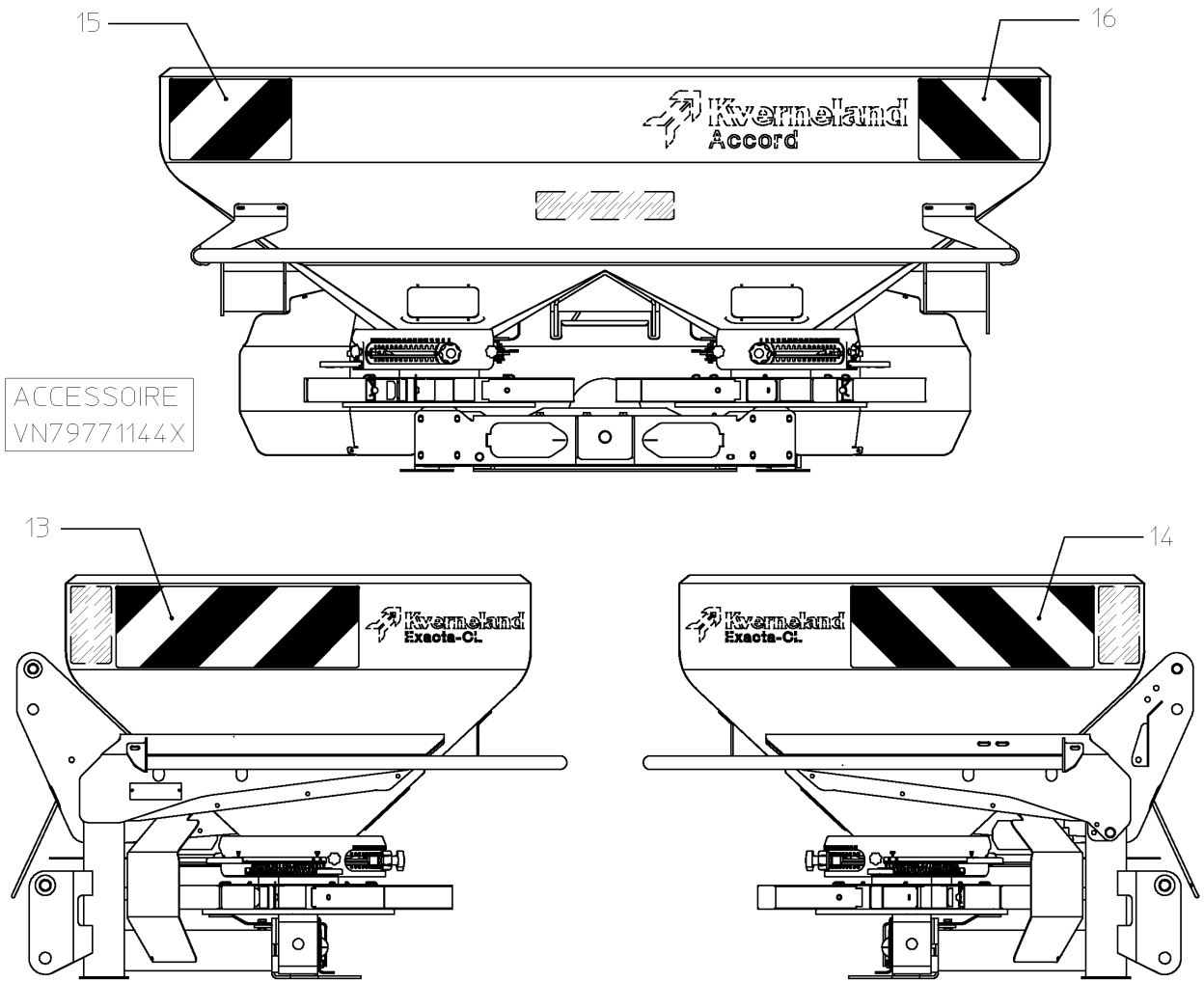

EXACTA-CL_VN21002_C13

PosNo.	Part No.	Qty.

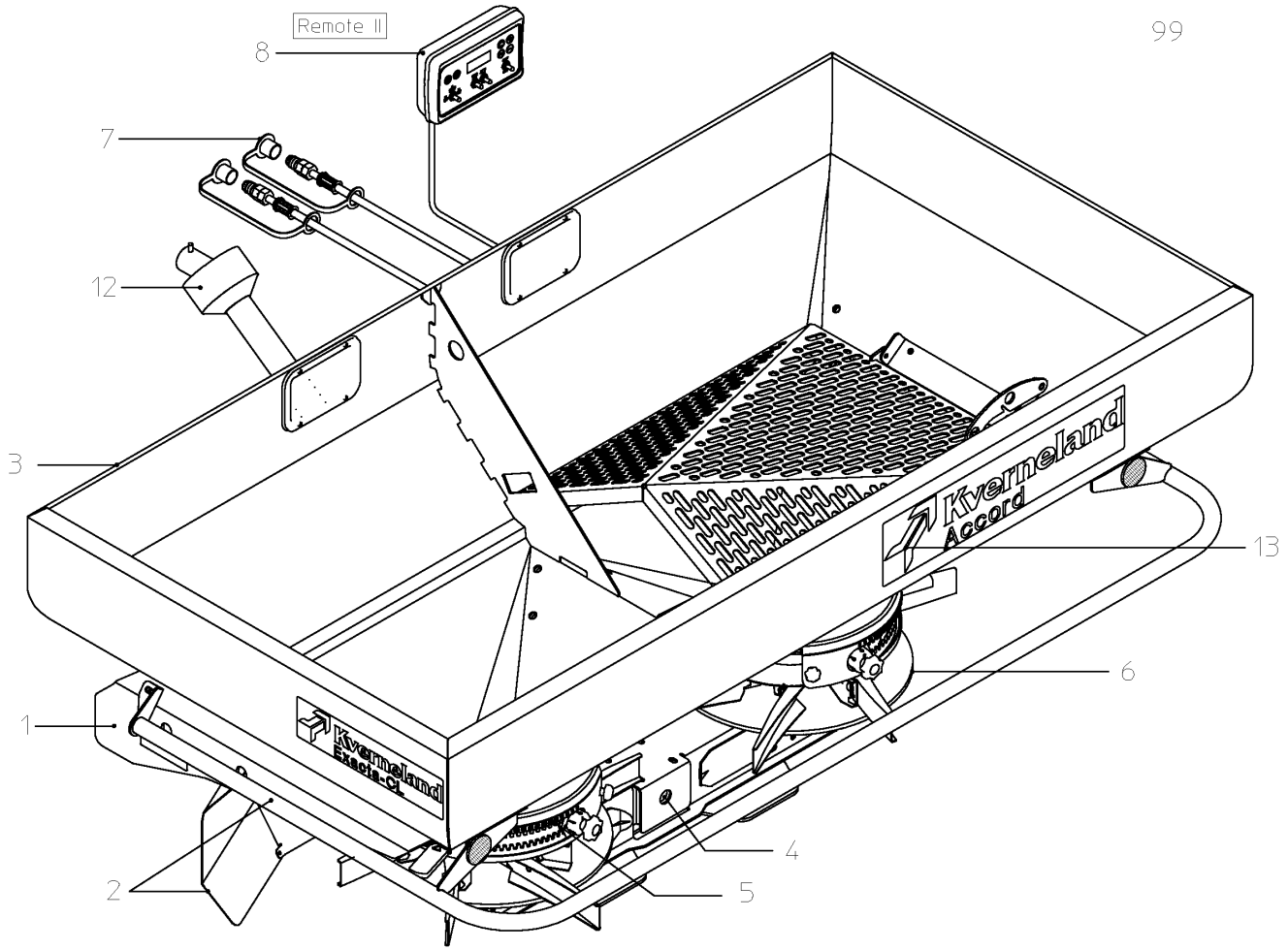

EXACTA-CL_VN21002_A10

EXACTA-CL / HOPPER EXTENSION

PosNo.	Part No.	Qty.
1	VNB4675402	2
2	VNB4675302	2
3	VNB3984186	4
4	VNB4218178	16
5	VNB4014778	4
6	VNB4053474	8

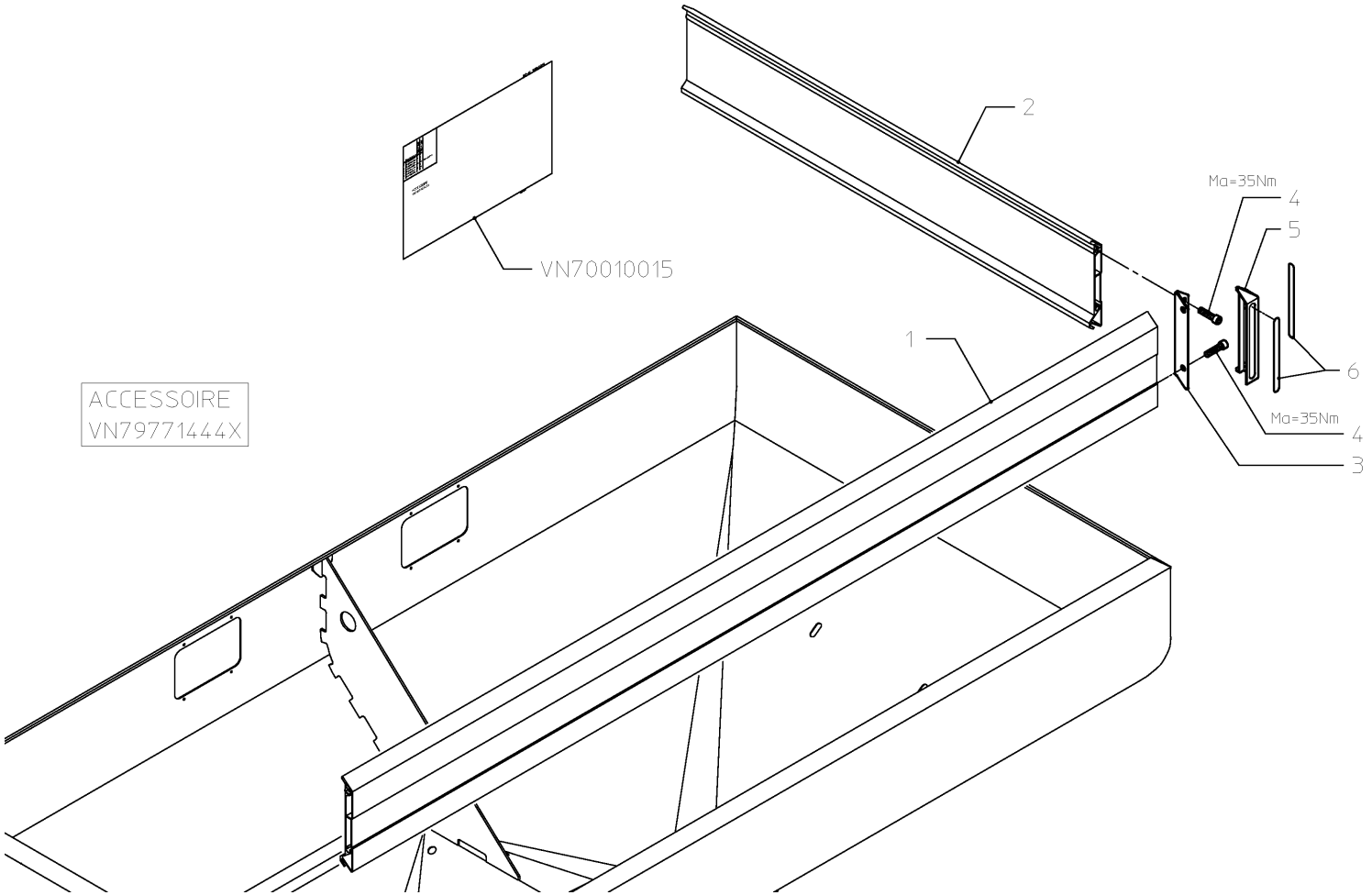

ROM_VN20603_P10

EXACTA-CL / TARPAULIN

PosNo.	Part No.	Qty.
1	KG01053700	8
2	KG01263900	8
3	KG00738100	2
4	KG00652900	12
5	KG00739600	10
6	KG01053500	2
7	KG01069900	22
8	KG01901500	8
9	KG00712600	1
10	KG01901400	10
11	VNB2092402	4
12	VNB3443478	4
13	VNB4079194	1
14	VNB4079294	1
15	VNB4079394	2
16	VNB4306694	1
17	VNB3603394	1
18	VNB4079094	1
19	VNB3603594	1
20	VNB4487278	10
21	RG00040217	1
22	VGTR2059	1
23	VNB4306494	1
24	VNB4306594	1
25	VNB4309102	8
26	KG00497600	8
27	KG00497200	8
28	KG01263600	1
29	VNB3447178	1
30	KG01069600	1
31	VNB4078794	3
32	VNB4493578	1

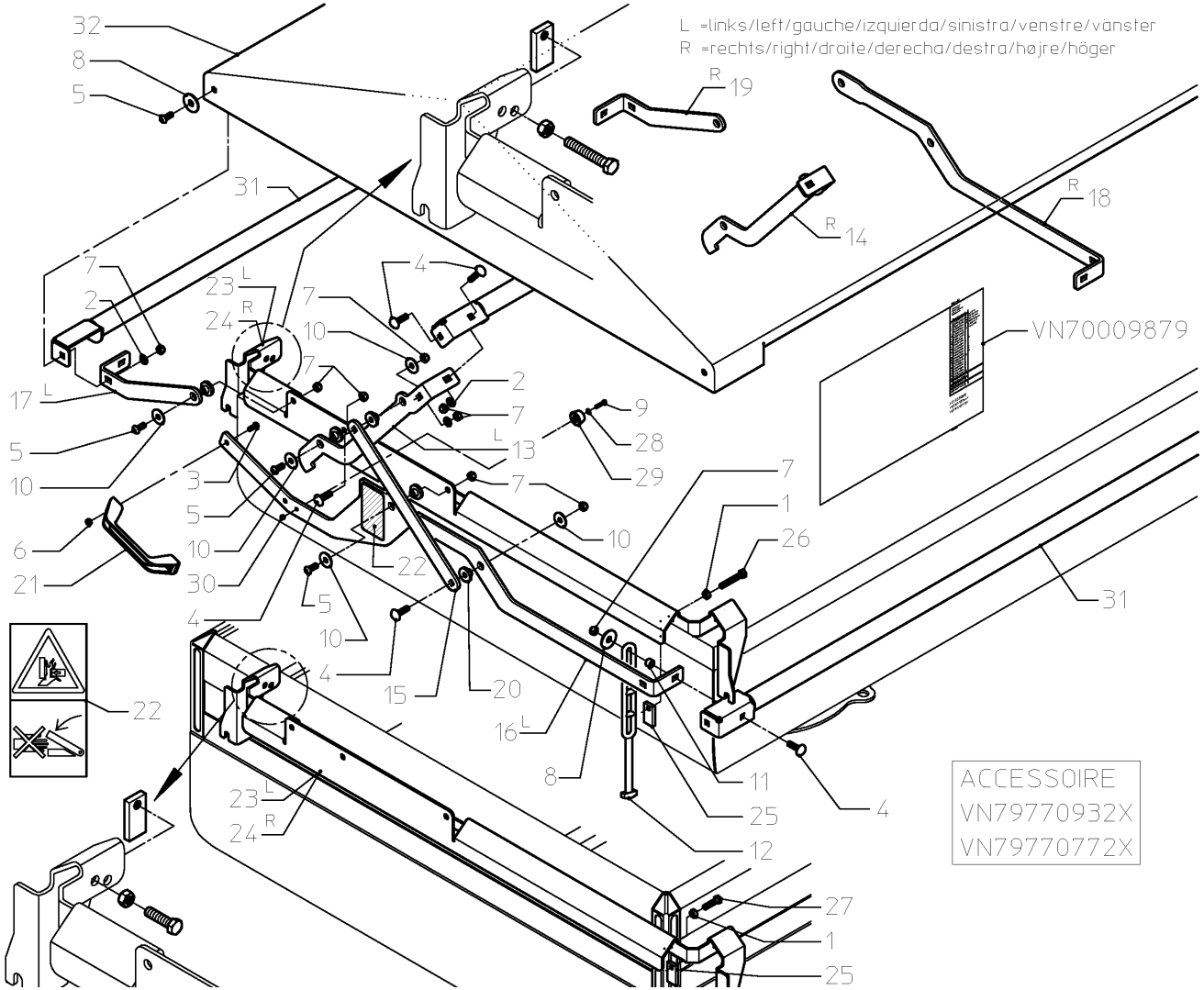

ROM_VN20602_N11

EXACTA-CL / LIGHTING

PosNo.	Part No.	Qty.
1	VNB4692078	2
2	KG00739400	4
3	VN48101007	1
4	VN48523002	4
5	VN48523001	2
6	VNB3620578	2
7	KG01283000	7
8	KG01053400	7
9	VNB4255678	1
10	VN80504003	10
11	VN80504001	2
12	VNB0341273	1
13	KG00714100	3
15	KG01263900	4
19	VNB3452478	1
20	VNB3452378	1

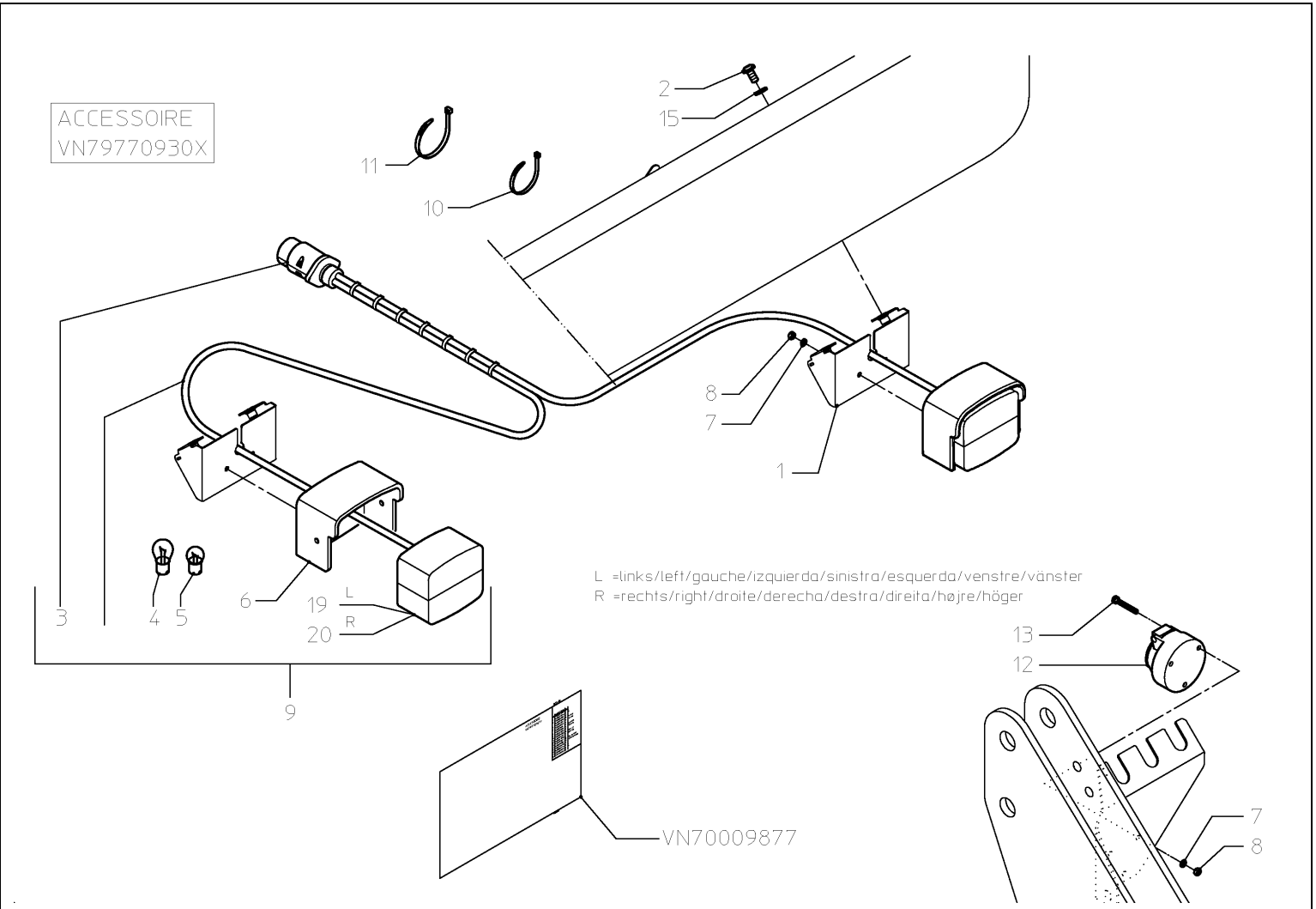

ROM_VN20603_P12

EXACTA-CL / HOPPER EMPTYING SET

PosNo.	Part No.	Qty.
1	VNB4407802	2
2	KG00679900	8
3	KG01263600	8
4	VN30105400	8
5	VNB4408202	2
6	KG00738300	6
7	VNB4423502	6
8	VNB4451002	6
9	KG01264000	6
10	KG01069800	6
11	VNB4334578	4
12	KG00738100	4
13	VNB4408302	2
14	KG01901300	2

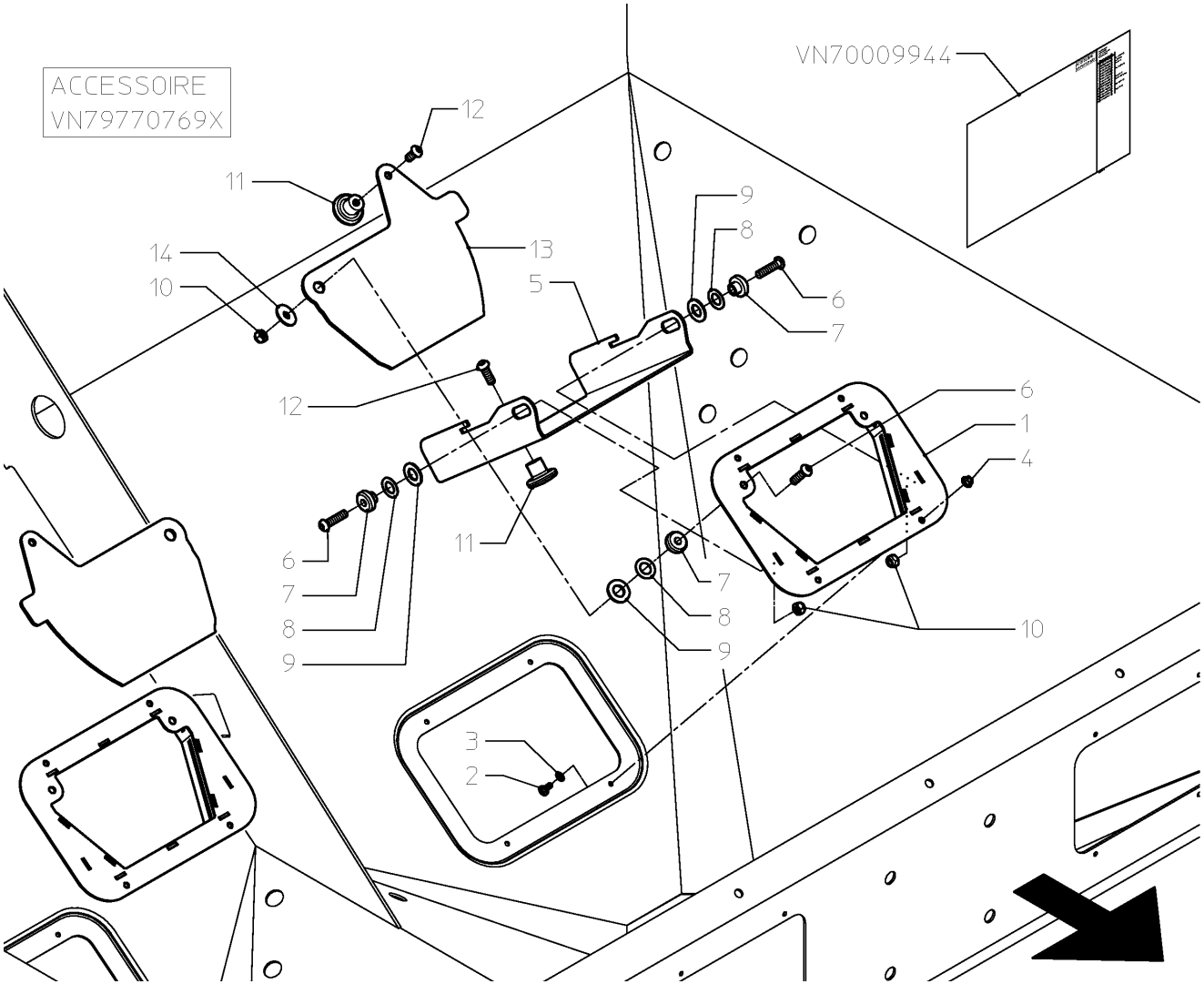

ROM_VN20602_N13

EXACTA-CL / LADDERSET

PosNo.	Part No.	Qty.
1	KG00497100	7
2	KG00654400	1
3	KG00868600	6
4	KG00870200	6
5	KG01069700	6
6	KG01069800	6
7	KG01069900	7
8	KG01901400	7
9	VNB4442278	1
10	VNB4450578	2
11	VNB4451194	1
12	VNB4451294	2
13	VNB4451394	7
14	VNB4451494	1
15	VNB4451978	1
16	VNB4473502	1
17	VNB4743378	3

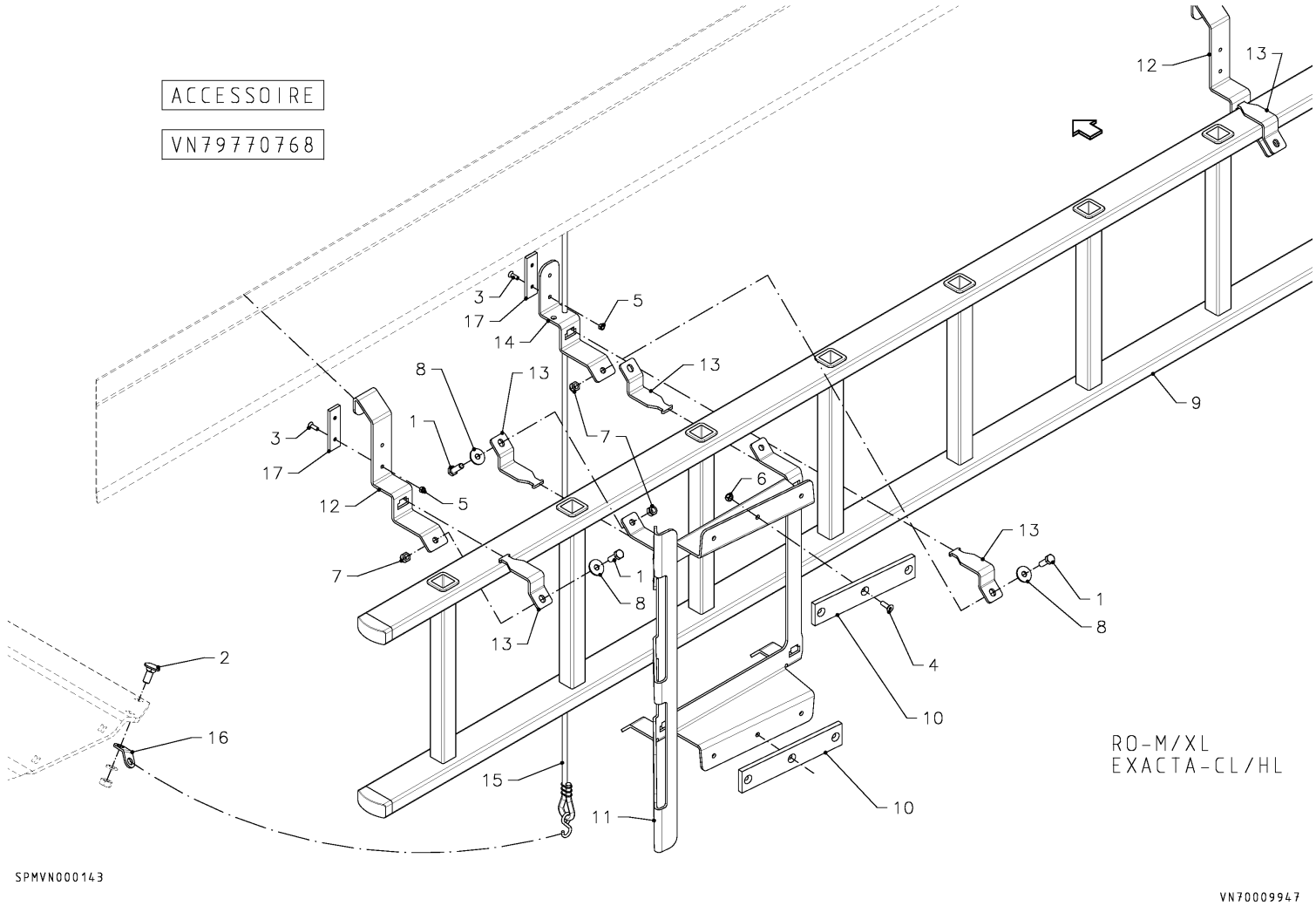

VN79770768-01-02

EXACTA-CL / CALIBRATION CONTAINER

PosNo.	Part No.	Qty.
1	VNB4332894	1
3	VNB4334578	1
4	KG01059600	2
5	KG00495300	1
10	VNB4332194	1
11	VNB4332094	1
12	RG00040217	2
13	KG00495100	4
14	KG01069800	4
15	VNB2760978	1
16	VN30143310	4
17	VNB1100802	2
18	KG00493700	4
19	KG01901200	4
20	KG01069700	4
21	VNB3708174	1
22	VGTR2023	1

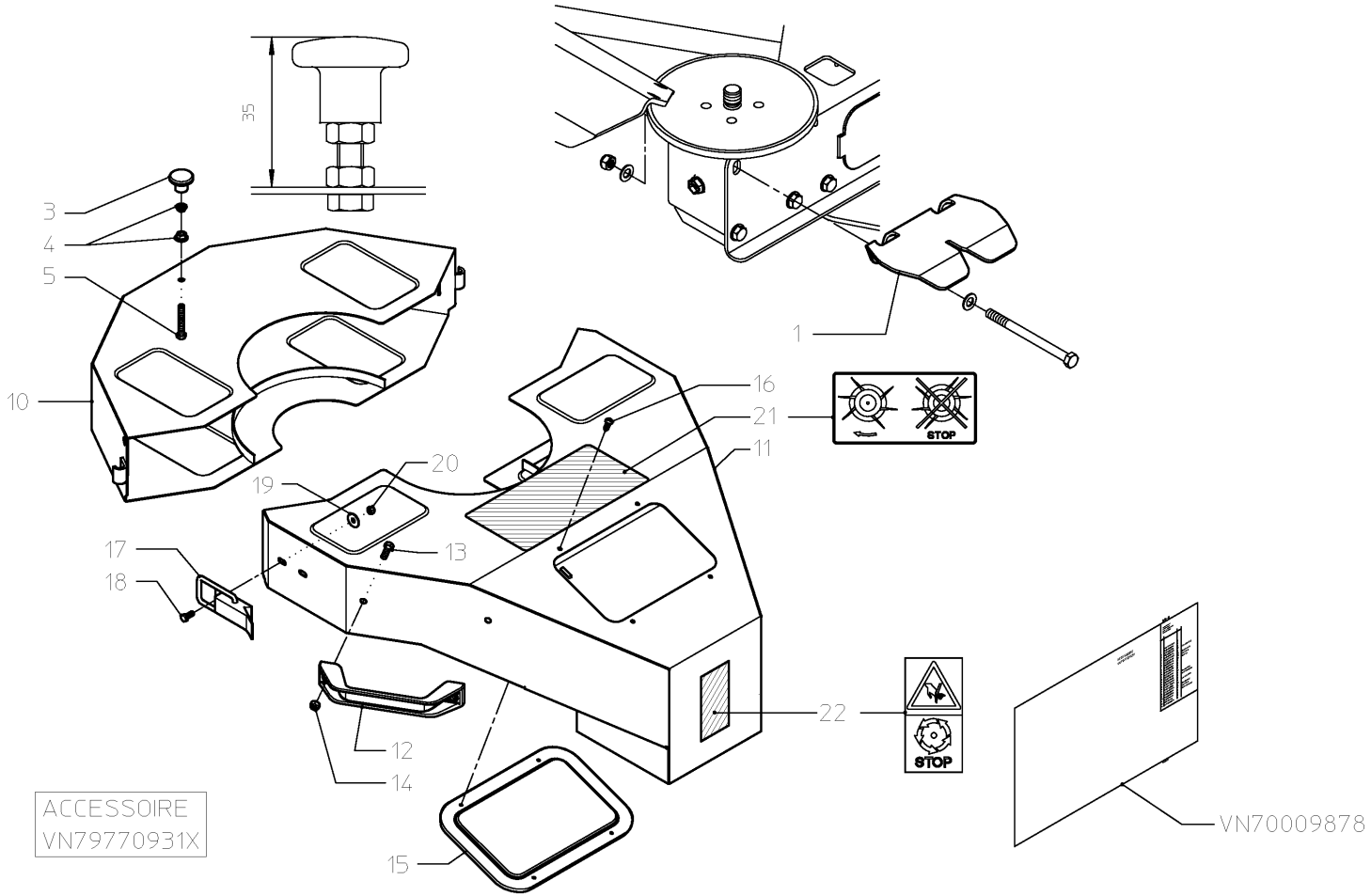

ROM_VN20602_N15

EXACTA-CL / BOUNDARY SPREADING PLATE

PosNo.	Part No.	Qty.
18	VNB2836494	1
19	VNB2836894	1
20	VNB2836994	1
21	VN17856588	1
22	KG00654400	2
23	VNB3356494	1

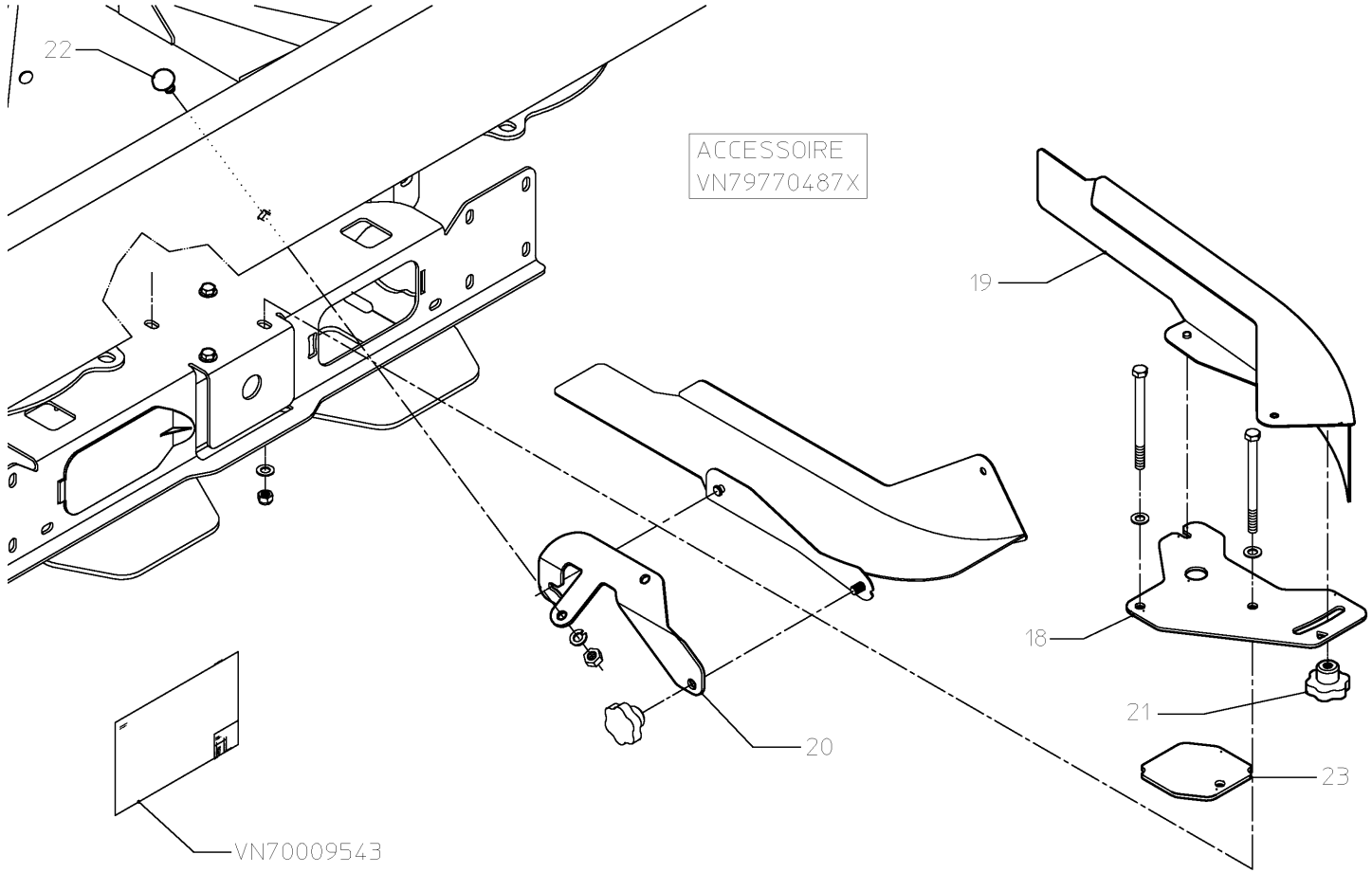

ROM_VN20602_N16

EXACTA-CL / 28 MTR KIT

PosNo.	Part No.	Qty.
1	VNB1060002	4
2	VNB2003102	1
3	KG00495200	1
4	KG01901300	2
5	VNB2003302	1
6	VNB2003294	1
7	KG01069800	1
8	VNB4530594	1
9	KG00497200	2

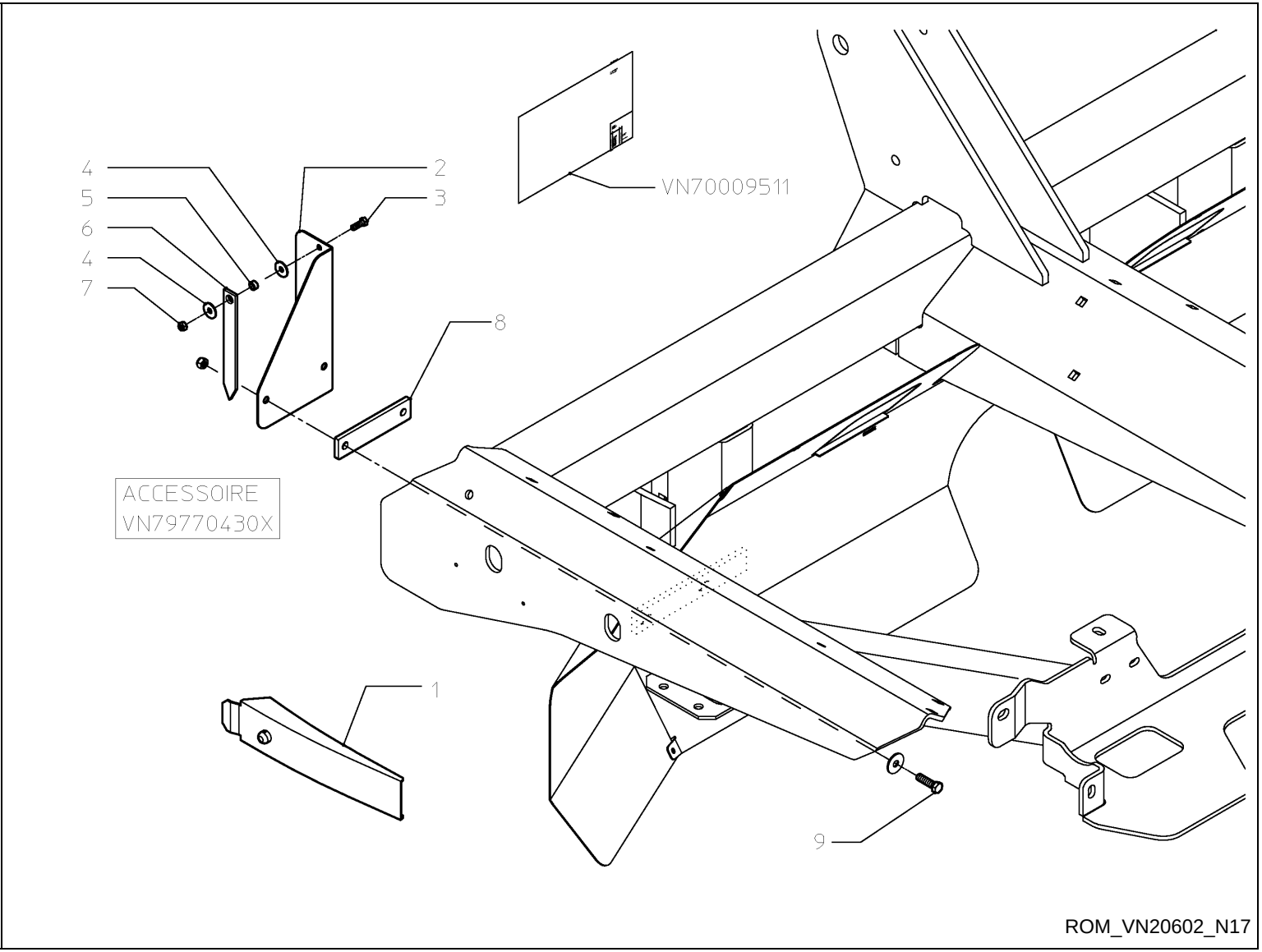

EXACTA-CL / TRAMLINE CYLINDER

PosNo.	Part No.	Qty.
1	VNB1608494	1
2	KG01204300	4
3	VNB2498994	1
4	VNB4529494	1
5	VN19456725	2
6	VNB1599894	2
7	VNB4529694	1
9	VNB4372578	1
10	VNB3712694	1
11	RG00048610	1
12	VN38854581	1
14	VNB4530394	1
15	VGTR2059	1
16	VNB0835678	1
17	KG00399500	4
18	KG01264100	8
19	KG01070100	4
20	VNB4530094	1
21	VNB4530194	1
22	VN30296225	4
23	VN99440851	4
24	VNB1926493	4

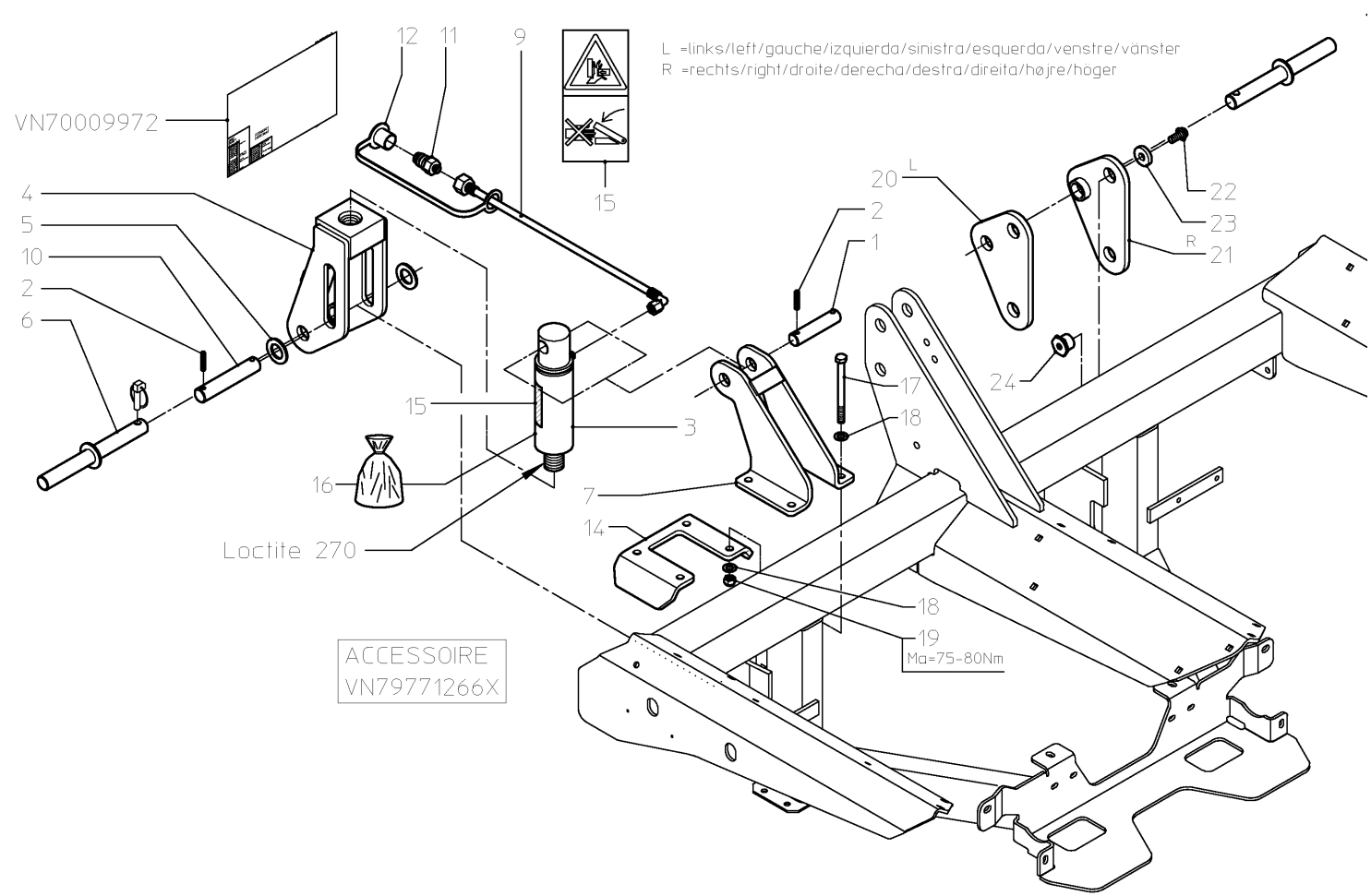

ROM_VN20602_N18

EXACTA-CL / TRIMFLOW

PosNo.	Part No.	Qty.
1	VNB3914302	1
2	VNB4482394	1
3	VN17856588	2
4	KG01070000	7
5	KG01264000	2
6	KG00498700	1
7	KG00495200	1
8	KG00498800	3
9	VNB4095194	1
10	VNB4008194	1
11	VNB4808802	1
12	VNB4808502	1
13	VNB4010794	1
14	VNB4267102	1
15	VNB3085978	2
16	VNB3913093	1
17	KG00497100	1
18	KG01263900	1
19	KG01069900	3
20	VN80504003	5
21	VN30130800	1
22	VN30117100	3
23	VNB2003302	1
24	VNB4297478	1
25	KG01069700	2
26	VN38854581	1
27	RG00048610	1
28	VN31419900	2
29	VN90007711	1
30	VNB4096002	1
31	KG01901300	1
32	VNB4769578	8
33	VGTR2059	1
34	VNB4239578	1
35	KG01901500	2
36	KG01069800	1
37	VN79771437	1
39	KG00868600	2
40	VNB4743378	1

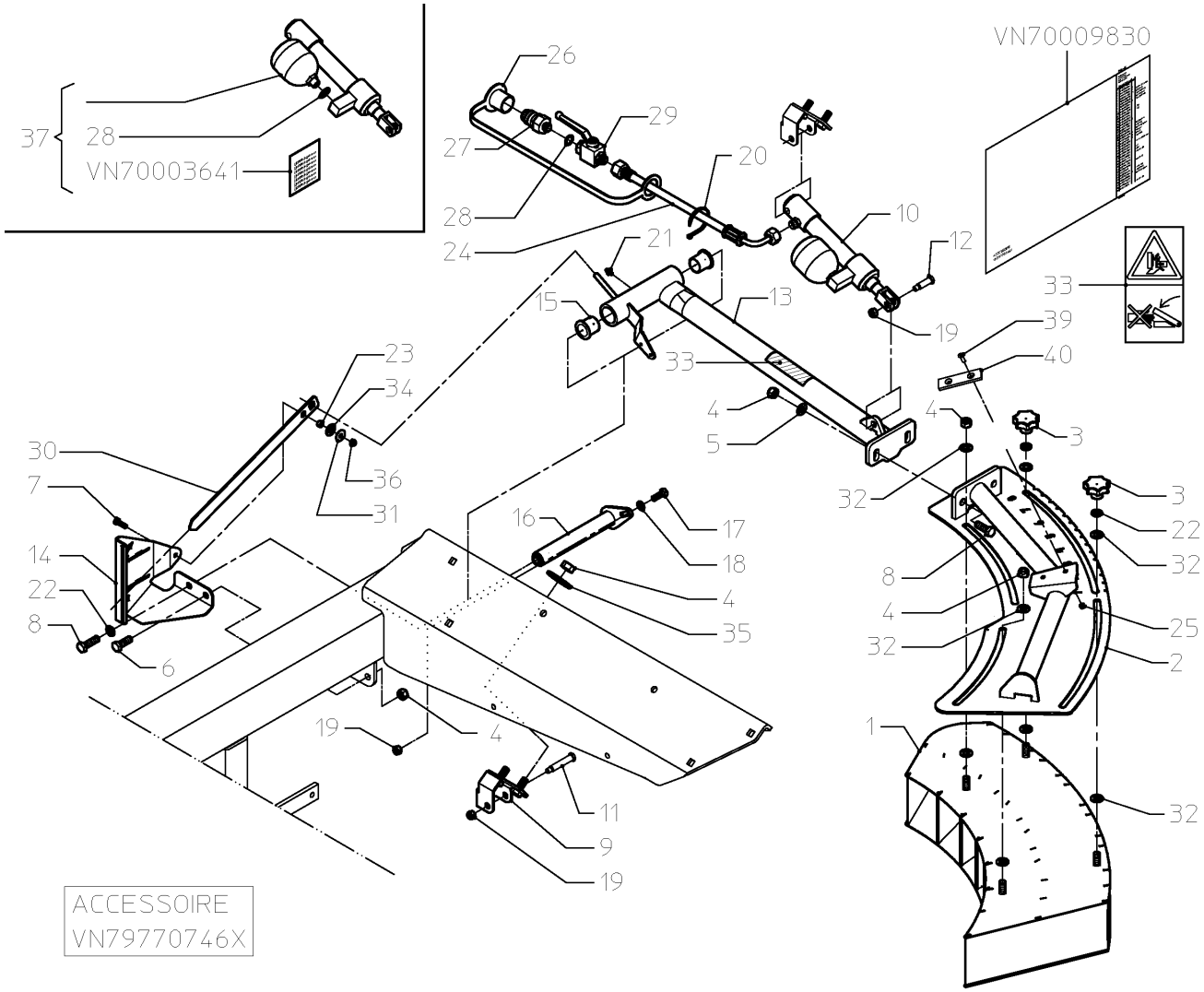

ROM_VN20603_P19

EXACTA-CL / FEELER GAUGE

PosNo.	Part No.	Qty.
17	VNB1709302	1
18	VNB1754278	1

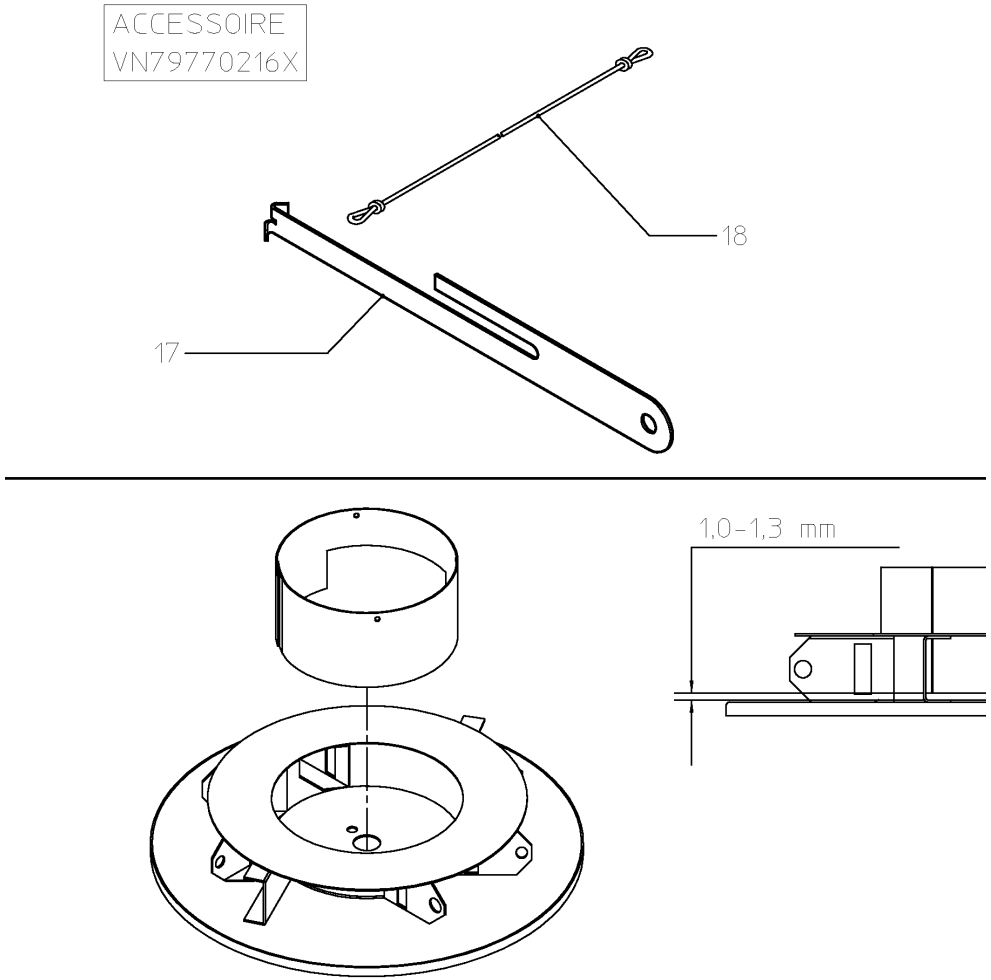

ROM_VN20602_N20

EXACTA-CL / SPREADING PATTERN CONTROLSET

PosNo.	Part No.	Qty.
1	VN79771400	1
2	AC353924	1
3	VN79771219	1

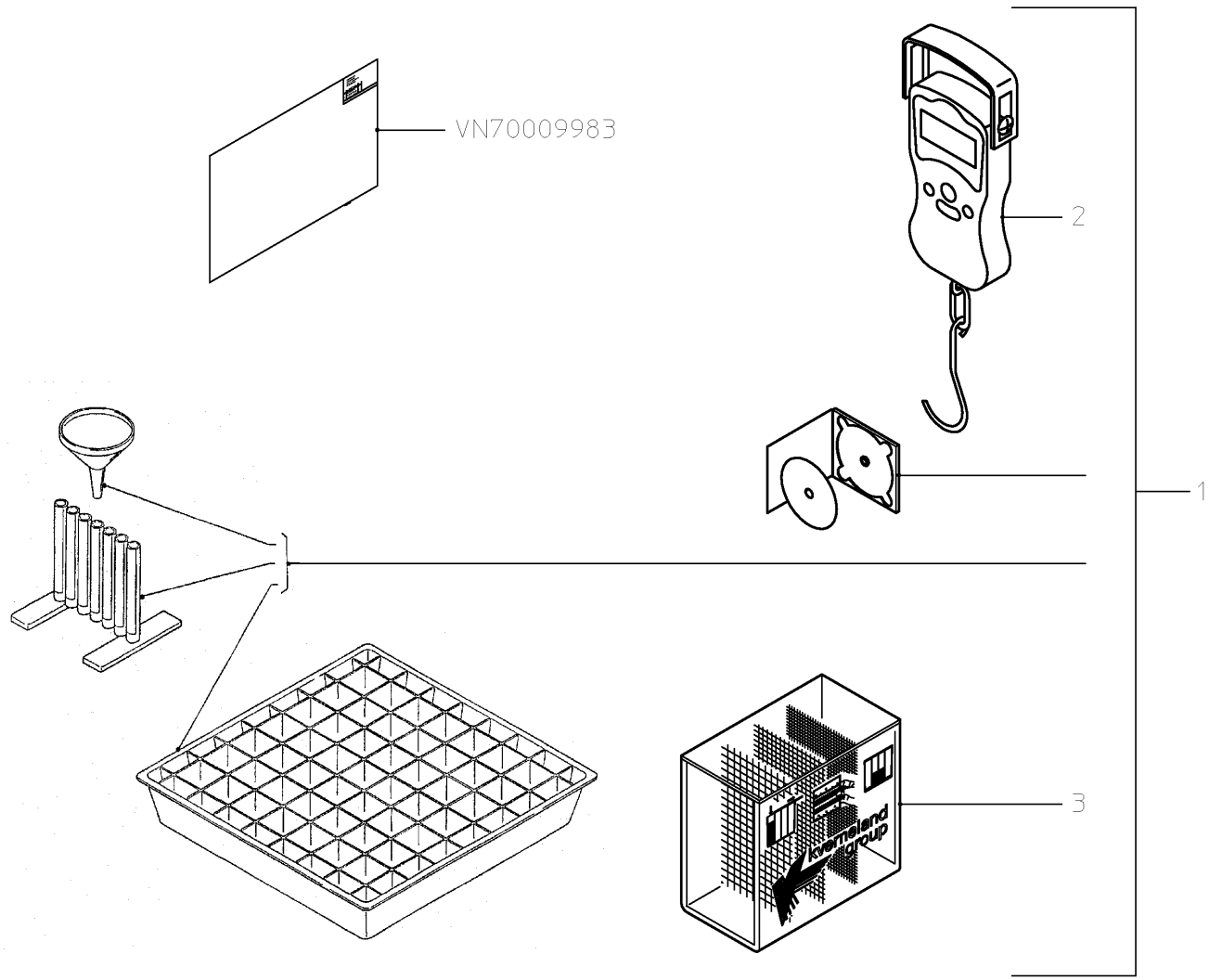

ROM_VN20602_N21

EXACTA-CL / HOSE SET

PosNo.	Part No.	Qty.
1	VNB4253278	2
2	AC351803	1
5	RG00048610	2
6	VN38854586	2
7	VNB4297802	4
11	VN31419900	1
12	VN17895704	1
13	VN38820225	1
14	VNB3083893	1
15	VNB1306893	1

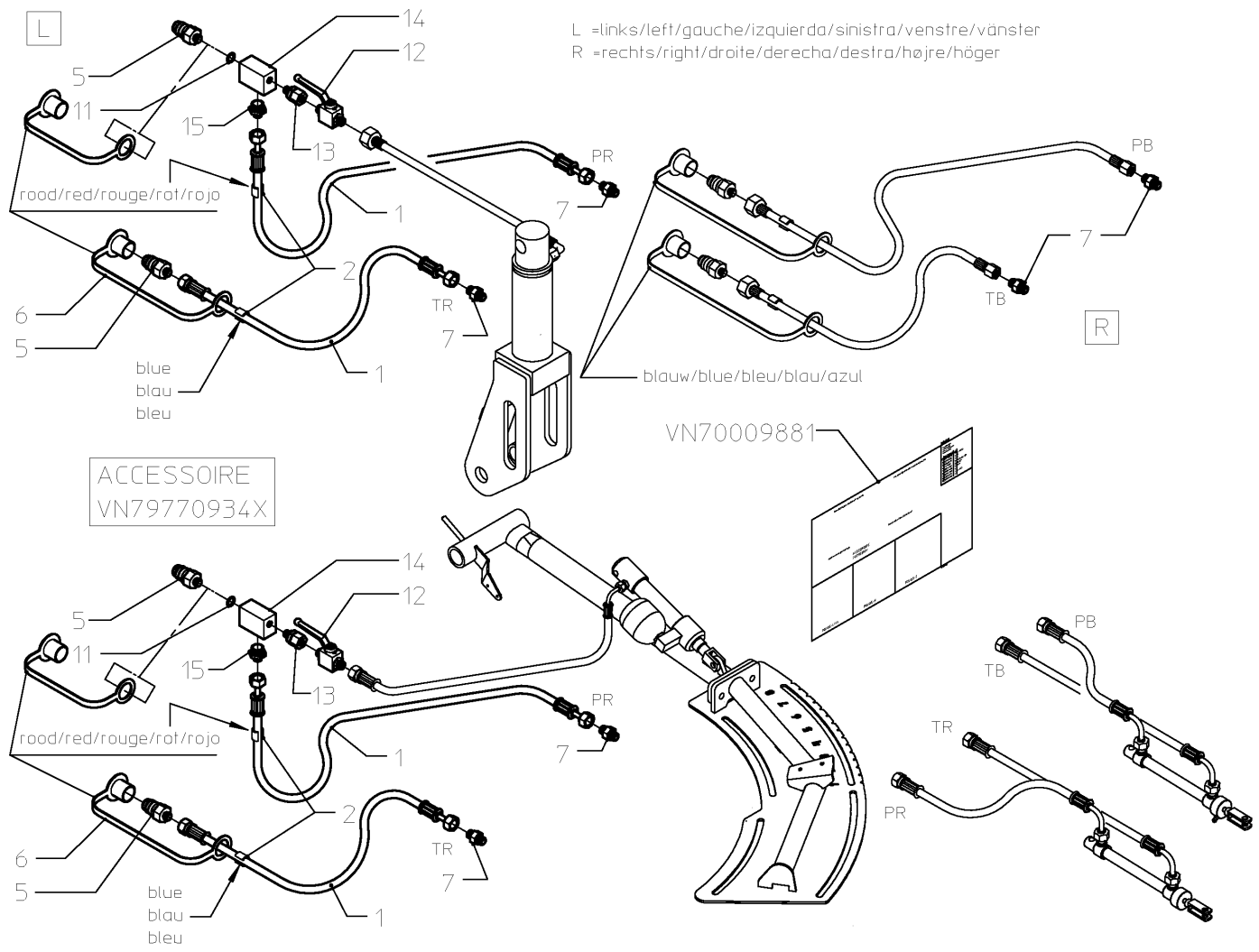

ROM_VN20603_P22

EXACTA-CL / 2X2 DIRECTION TAP SET

PosNo.	Part No.	Qty.
1	VNB1840194	1
2	VNB0854378	1
3	KG00501000	2
4	VN30598012	2
5	KG00498500	1
6	VNB1308693	1
8	VN38820225	2
9	VN38820194	1
10	VN17895704	1
11	VN17895703	1
12	VNB4297378	2
15	VN80504001	4
16	VNB1727574	1
18	VNB4297802	2
19	KG01264100	2

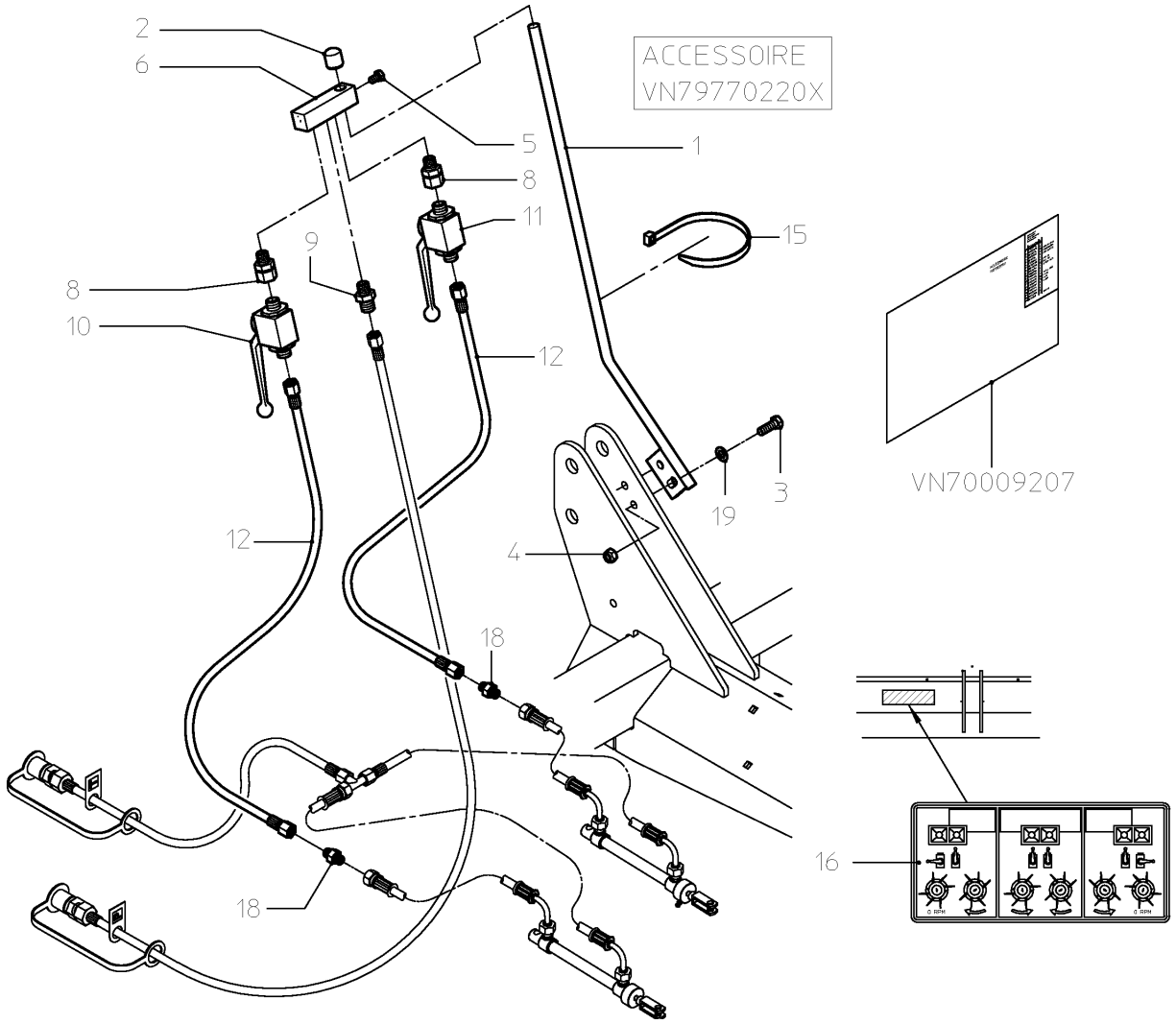

ROM_VN20602_N23

EXACTA-CL / SPREADING DISC RPM SENSOR SET

PosNo.	Part No.	Qty.
1	VNB0266873	1
2	KG01069900	2
3	VNB4256202	1
4	KG00496900	2
5	VN31903304	1
6	VN80504001	3
7	VN80504003	3
9	KG01263900	2

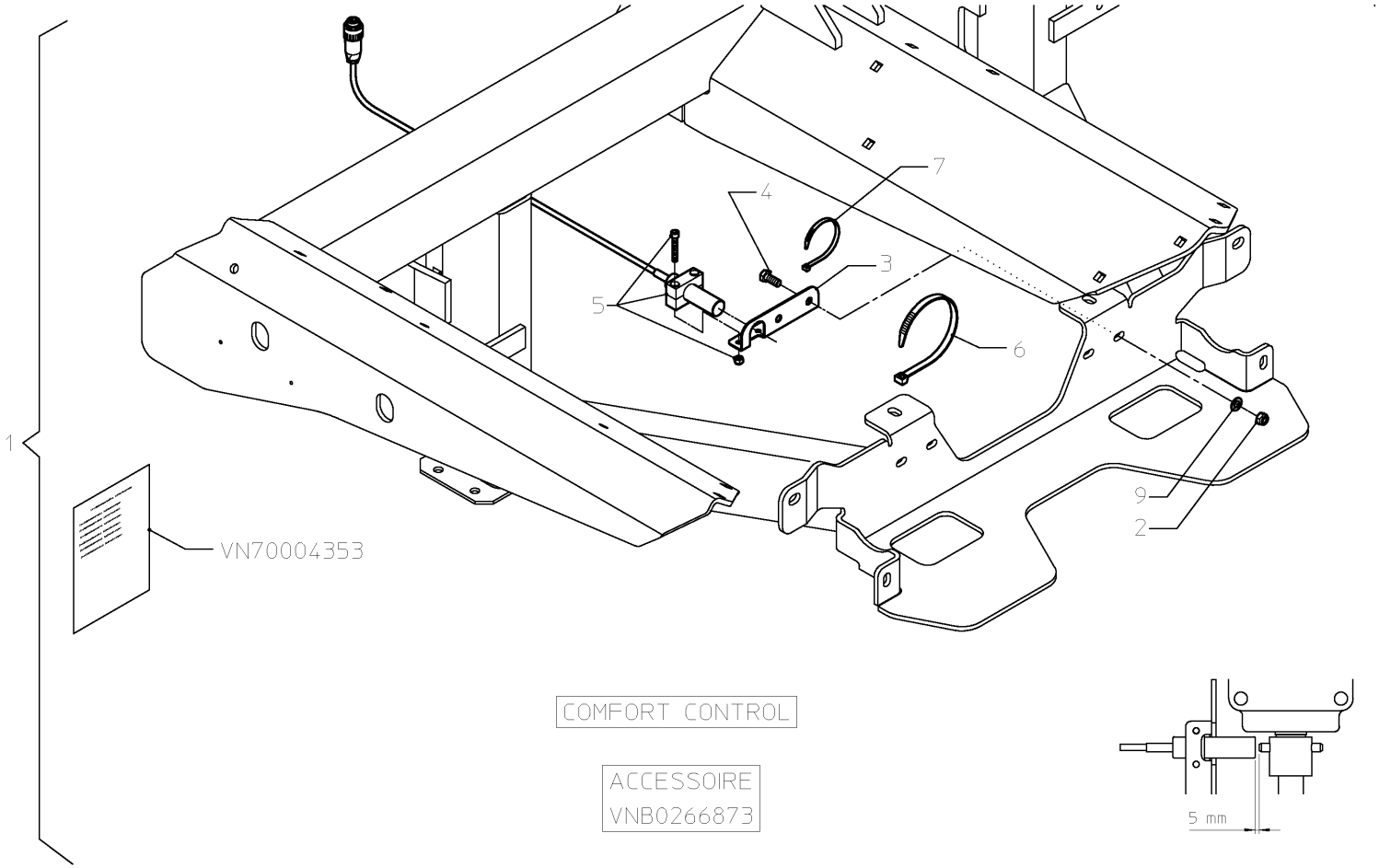

ROM_VN20602_N24

EXACTA-CL / WHEELRINGS

PosNo.	Part No.	Qty.
3	VNB1517586	1
4	KG00872200	4
5	VNB1153493	4
7	KG01263900	4
8	KG01069900	4
9	VNB2928086	2
10	KG00871700	2

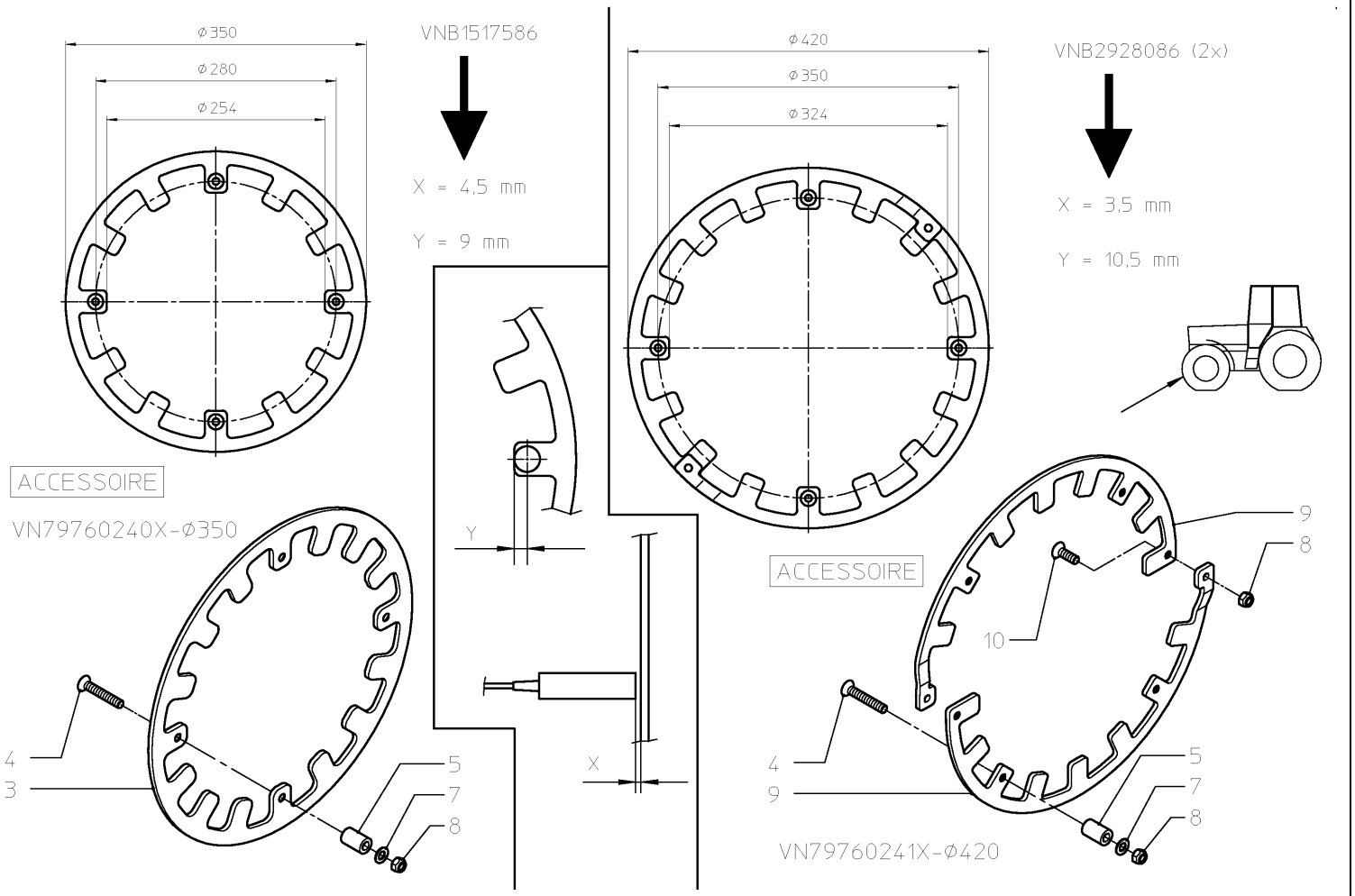

ROM_VN20602_N25

EXACTA-CL / SENSORS AND CABLES

PosNo.	Part No.	Qty.
11	VNB0304073	1
12	VNB0326573	1
15	VNB0430273	1

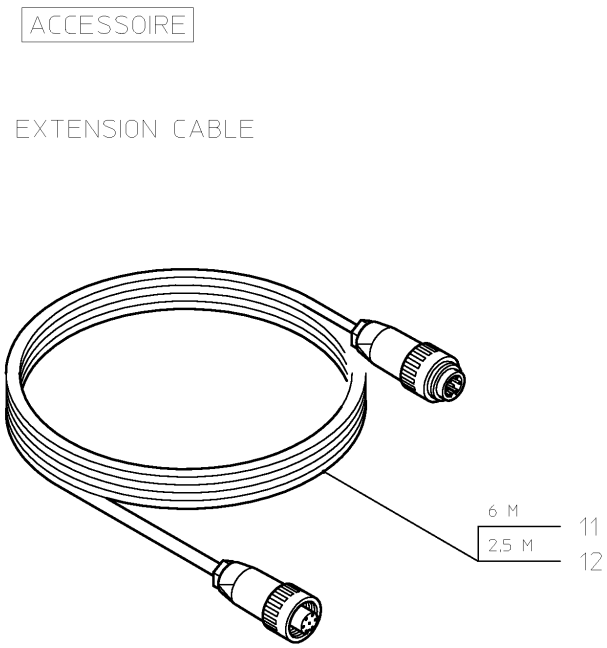

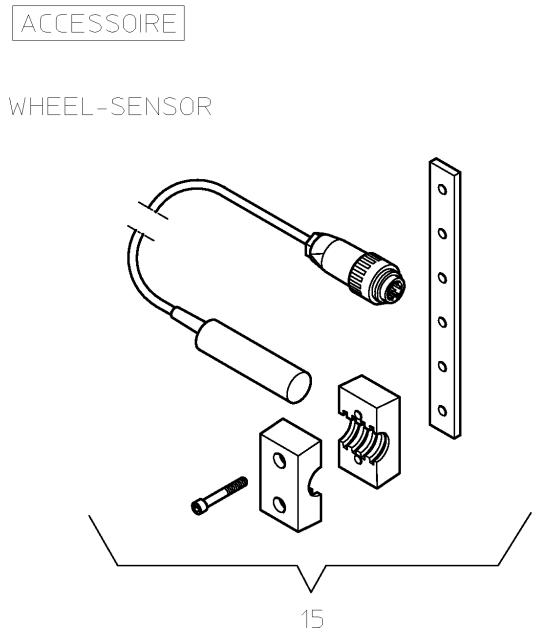

ROM_VN20602_N26

EXACTA-CL / RADARCABLES

PosNo.	Part No.	Qty.
1	VNB0303973	1
4	VNB0305973	1
5	VNB0386773	1
6	VNB0540173	1
7	VNB0391073	1

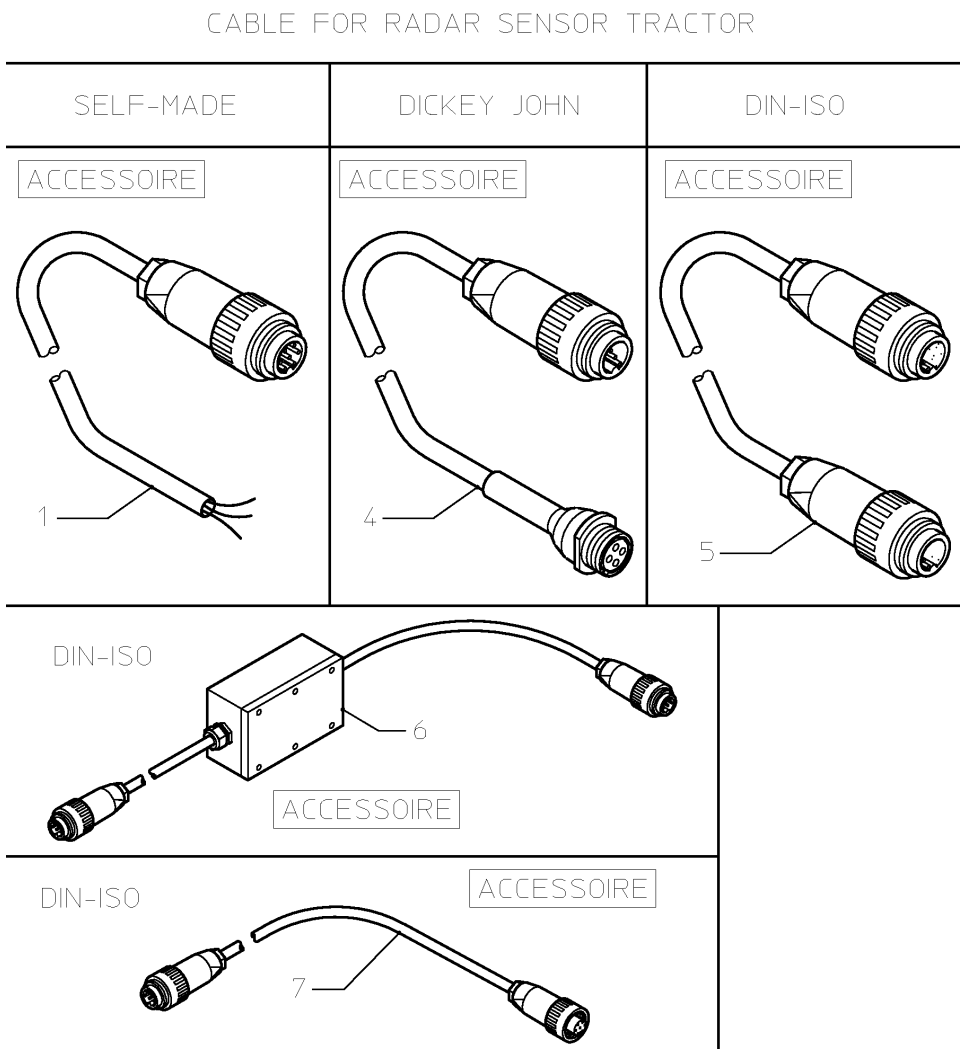

ROM_VN20602_N27

EXACTA-CL / Part No Index

Part No.	Page	Pos No	Part No.	Page	Pos No	Part No.	Page	Pos No	Part No.	Page	Pos No
AC351803	7	14	KG00565700	6	11	KG01053800	5	13	KG01070000	23	4
AC351803	26	2	KG00652900	15	4	KG01059600	2	6	KG01070100	1	7
AC353924	25	2	KG00654400	3	10	KG01059600	19	4	KG01070100	22	19
KG00397400	4	23	KG00654400	18	2	KG01059700	2	10	KG01192062	10	24
KG00397500	4	2	KG00654400	20	22	KG01069600	15	30	KG01192162	4	26
KG00399500	22	17	KG00679700	7	34	KG01069700	5	25	KG01204300	22	2
KG00493700	19	18	KG00679900	17	2	KG01069700	18	5	KG01204600	6	6
KG00494900	2	5	KG00680900	5	23	KG01069700	19	20	KG01263600	15	28
KG00495100	19	13	KG00712600	15	9	KG01069700	23	25	KG01263600	17	3
KG00495200	7	31	KG00714100	16	13	KG01069800	3	23	KG01263900	2	9
KG00495200	21	3	KG00738100	5	2	KG01069800	5	10	KG01263900	4	12
KG00495200	23	7	KG00738100	15	3	KG01069800	7	33	KG01263900	15	2
KG00495300	19	5	KG00738100	17	12	KG01069800	17	10	KG01263900	16	15
KG00496900	28	4	KG00738300	17	6	KG01069800	18	6	KG01263900	23	18
KG00497100	3	17	KG00739400	2	8	KG01069800	19	14	KG01263900	28	9
KG00497100	18	1	KG00739400	16	2	KG01069800	21	7	KG01263900	29	7
KG00497100	23	17	KG00739600	15	5	KG01069800	23	36	KG01264000	2	12
KG00497200	4	11	KG00747600	5	38	KG01069900	2	4	KG01264000	3	6
KG00497200	15	27	KG00803400	7	28	KG01069900	3	20	KG01264000	4	3
KG00497200	21	9	KG00868600	18	3	KG01069900	4	13	KG01264000	7	36
KG00497600	15	26	KG00868600	23	39	KG01069900	6	12	KG01264000	17	9
KG00498500	27	5	KG00870000	3	22	KG01069900	7	5	KG01264000	23	5
KG00498700	2	11	KG00870000	5	27	KG01069900	9	7	KG01264100	22	18
KG00498700	3	5	KG00870200	5	9	KG01069900	15	7	KG01264100	27	19
KG00498700	7	6	KG00870200	18	4	KG01069900	18	7	KG01283000	16	7
KG00498700	9	8	KG00871700	29	10	KG01069900	23	19	KG01901100	7	35
KG00498700	23	6	KG00872200	29	4	KG01069900	28	2	KG01901200	19	19
KG00498800	2	17	KG00945900	9	4	KG01069900	29	8	KG01901300	7	13
KG00498800	23	8	KG01044900	5	14	KG01070000	2	13	KG01901300	17	14
KG00499500	5	11	KG01053400	16	8	KG01070000	3	7	KG01901300	21	4
KG00500900	1	6	KG01053500	15	6	KG01070000	4	4	KG01901300	23	31
KG00501000	27	3	KG01053700	15	1	KG01070000	7	8	KG01901400	2	3
KG00501100	1	10	KG01053800	3	9	KG01070000	9	10	KG01901400	3	18

EXACTA-CL / Part No Index

Part No.	Page	Pos No	Part No.	Page	Pos No	Part No.	Page	Pos No	Part No.	Page	Pos No
KG01901400	15	10	VGTR2059	15	22	VN46120092	10	1	VNB0682993	4	7
KG01901400	18	8	VGTR2059	22	15	VN48101007	16	3	VNB0765193	1	13
KG01901500	7	7	VGTR2059	23	33	VN48523001	16	5	VNB0835678	22	16
KG01901500	9	9	VN17856588	20	21	VN48523002	16	4	VNB0854378	27	2
KG01901500	15	8	VN17856588	23	3	VN79771219	6	18	VNB0870178	1	4
KG01901500	23	35	VN17895703	27	11	VN79771219	25	3	VNB0897393	1	3
KG01901600	1	9	VN17895704	26	12	VN79771400	25	1	VNB1060002	6	14
KK742357	11	18	VN17895704	27	10	VN79771437	23	37	VNB1060002	21	1
RG00040217	15	21	VN19456725	22	5	VN80504001	7	11	VNB1077665	6	5
RG00040217	19	12	VN30105400	17	4	VN80504001	9	11	VNB1077702	6	7
RG00048610	7	16	VN30117100	3	8	VN80504001	16	11	VNB1082102	6	13
RG00048610	22	11	VN30117100	5	12	VN80504001	27	15	VNB1100802	19	17
RG00048610	23	27	VN30117100	23	22	VN80504001	28	6	VNB1153493	29	5
RG00048610	26	5	VN30128821	2	2	VN80504003	16	10	VNB1181374	6	4
RG00050664	4	17	VN30130800	9	5	VN80504003	23	20	VNB1181374	11	11
VG10.01.00	10	21	VN30130800	23	21	VN80504003	28	7	VNB1194874	6	2
VG10.48.00	10	23	VN30143310	3	13	VN90007711	23	29	VNB1194874	11	10
VG10.49.00	10	27	VN30143310	19	16	VN99440851	22	23	VNB1306893	26	15
VG10.83.40	10	11	VN30296225	22	22	VNB0266873	28	1	VNB1308693	27	6
VG365305	10	53	VN30598012	27	4	VNB0303973	31	1	VNB1310474	11	7
VG56.117.19	10	13	VN31419900	23	28	VNB0304073	30	11	VNB1517586	29	3
VG75.02.15	10	25	VN31419900	26	11	VNB0305973	31	4	VNB1593593	4	10
VG75.06.15	10	26	VN31903304	28	5	VNB0326573	30	12	VNB1599794	1	2
VG82.36.03	10	55	VN36107317	9	3	VNB0341273	16	12	VNB1599894	22	6
VG83.09.01	10	51	VN37601011	1	11	VNB0374873	8	3	VNB1599994	1	12
VG83.10.03	10	54	VN37601015	2	18	VNB0386773	31	5	VNB1608494	22	1
VG85.004	10	5	VN38820194	27	9	VNB0391073	31	7	VNB1617078	5	20
VG85.005	10	4	VN38820225	26	13	VNB0430273	30	15	VNB1709302	24	17
VG85.05.06	10	52	VN38820225	27	8	VNB0540173	31	6	VNB1727574	27	16
VGAGRASET173	10	12	VN38854581	7	17	VNB0548173	8	2	VNB1754278	24	18
VGAGRASET207	10	90	VN38854581	22	12	VNB0550373	9	17	VNB1840194	27	1
VGND98026V	10	22	VN38854581	23	26	VNB0563773	8	1	VNB1926493	22	24
VGTR2023	19	22	VN38854586	26	6	VNB0566173	9	19	VNB1998902	6	15

EXACTA-CL / Part No Index

Part No.	Page	Pos No	Part No.	Page	Pos No	Part No.	Page	Pos No	Part No.	Page	Pos No
VNB1999002	6	16	VNB3452478	16	19	VNB4008194	23	10	VNB4253278	26	1
VNB1999102	6	17	VNB3559902	5	28	VNB4010794	23	13	VNB4254894	7	18
VNB2003102	21	2	VNB3603394	15	17	VNB4014778	14	5	VNB4255402	6	1
VNB2003294	21	6	VNB3603594	15	19	VNB4042498	5	29	VNB4255502	6	3
VNB2003302	7	19	VNB3620578	16	6	VNB4042598	5	30	VNB4255678	16	9
VNB2003302	21	5	VNB3708174	19	21	VNB4042702	5	15	VNB4256202	28	3
VNB2003302	23	23	VNB3712694	22	10	VNB4053474	14	6	VNB4260994	3	1
VNB2068778	3	11	VNB3734878	4	24	VNB4059402	5	31	VNB4267102	23	14
VNB2092402	15	11	VNB3872902	8	4	VNB4061702	5	3	VNB4270094	3	2
VNB2235978	9	18	VNB3910902	4	25	VNB4061978	5	32	VNB4270394	3	3
VNB2332694	1	8	VNB3913093	23	16	VNB4063078	9	13	VNB4270494	3	4
VNB2333794	6	10	VNB3914302	23	1	VNB4063178	9	14	VNB4270602	3	19
VNB2417578	4	9	VNB3957302	5	6	VNB4064578	4	14	VNB4292878	7	22
VNB2417602	4	16	VNB3957402	5	7	VNB4064678	4	15	VNB4292978	7	27
VNB2498994	22	3	VNB3957502	5	26	VNB4064778	4	1	VNB4296978	7	9
VNB2760978	3	12	VNB3957678	7	21	VNB4073178	5	8	VNB4297378	27	12
VNB2760978	19	15	VNB3957778	7	20	VNB4077378	5	39	VNB4297478	23	24
VNB2836494	20	18	VNB3957878	7	23	VNB4077402	1	5	VNB4297702	7	10
VNB2836894	20	19	VNB3957978	7	24	VNB4078794	15	31	VNB4297802	26	7
VNB2836994	20	20	VNB3958078	7	25	VNB4079094	15	18	VNB4297802	27	18
VNB2928086	29	9	VNB3958178	7	26	VNB4079194	15	13	VNB4306494	15	23
VNB3083893	26	14	VNB3958278	5	34	VNB4079294	15	14	VNB4306594	15	24
VNB3085978	23	15	VNB3962278	7	29	VNB4079394	15	15	VNB4306694	15	16
VNB3317278	5	1	VNB3962378	7	30	VNB4095194	23	9	VNB4309102	15	25
VNB3317378	9	2	VNB3967093	4	5	VNB4096002	23	30	VNB4319078	3	14
VNB3322494	7	1	VNB3967393	4	8	VNB4105374	11	8	VNB4332094	19	11
VNB3322594	9	1	VNB3967598	5	16	VNB4218178	14	4	VNB4332194	19	10
VNB3325865	6	8	VNB3967698	5	17	VNB4239578	7	32	VNB4332894	19	1
VNB3325965	6	9	VNB3969702	5	4	VNB4239578	23	34	VNB4334578	17	11
VNB3356494	20	23	VNB3969802	5	5	VNB4241402	2	1	VNB4334578	19	3
VNB3443478	15	12	VNB3970002	5	37	VNB4249994	2	14	VNB4335902	5	21
VNB3447178	15	29	VNB3977774	11	1	VNB4253078	2	15	VNB4369693	4	19
VNB3452378	16	20	VNB3984186	14	3	VNB4253278	7	12	VNB4372578	22	9

Part No.	Page	Pos No	Part No.	Page	Pos No
VNB4376974	11	5	VNB4530394	22	14
VNB4377074	11	3	VNB4530594	21	8
VNB4377174	11	6	VNB4627578	3	21
VNB4377274	11	4	VNB4627794	3	16
VNB4377474	12	13	VNB4629994	2	7
VNB4377574	12	14	VNB4650394	2	16
VNB4377674	12	15	VNB4675302	14	2
VNB4377774	12	16	VNB4675402	14	1
VNB4407802	17	1	VNB4692078	16	1
VNB4408202	17	5	VNB4702278	4	27
VNB4408302	17	13	VNB4743202	7	37
VNB4423078	7	2	VNB4743378	18	17
VNB4423502	17	7	VNB4743378	23	40
VNB4426274	11	12	VNB4769578	23	32
VNB4442278	18	9	VNB4808502	9	6
VNB4450578	18	10	VNB4808502	23	12
VNB4451002	17	8	VNB4808602	7	3
VNB4451194	18	11	VNB4808702	7	4
VNB4451294	18	12	VNB4808802	23	11
VNB4451394	18	13			
VNB4451494	18	14			
VNB4451978	18	15			
VNB4473502	18	16			
VNB4482394	23	2			
VNB4487278	15	20			
VNB4493578	15	32			
VNB4494094	1	1			
VNB4494274	11	9			
VNB4494574	11	2			
VNB4529494	22	4			
VNB4529694	22	7			
VNB4530094	22	20			
VNB4530194	22	21			

AANHAALMOMENTEN / TORQUES / ANZUGSMOMENTE / COUPLES DE SERRAGE / PARES DE APRIETE / MOMENTI DI TORSIONE / BINÁRIOS DE APERTO / TILSTRAMMINGSMOMENTER / TILSPÆNDINGSMOMENTER

NL Richtlijnen voor aanhaalmomenten (in Nm) voor zelfborgende moeren, zeskantbouten en moeren.
DE Richtlinien für Anzugsmomente (in Nm) für selbstsichernde Muttern, Sechskantschrauben und -muttern.
ES Directrices para los pares de apriete (en Nm) para las tuercas autoblocantes, los tornillos hexagonales y las tuercas.
IT Direttive per momenti di torsione (espressi in Nm) per dadi autobloccanti, bulloni esagonali e dadi.
NO Retningslinjer for tilstrammingsmomenter (i Nm) for selvlåsende muttere, sekskantbolter og muttere.
EN Guidelines for torques (in Nm) for self-locking nuts, hexagon bolts and nuts.
FR Directives pour les couples de serrage (en Nm) pour écrous á autobloquants, boulons á six pans et écrous.
PT Directrizes para os binários de aperto (em Nm) para porcas autobloqueadoras, parafusos hexagonais e porcas.
DA Retningslinier for tilspændingsmomenter (i Nm) for selvlåsende møtrikker, sekskantbolte og møtrikker.

Kwaliteit / Quality / Qualität / Qualité / Calidad / Qualidade / Qualità / Kvalitet	4.6		8.8		10.9		12.9	
Wrijving / Friction / Reibung / Fricción / Atrito / Attrito / Friktion /Friksjon *	0,10	0,13	0,10	0,13	0,10	0,13	0,10	0,13
Schroefdraad / Thread / Gewinde / Filetage Rosca / Filettatura / Gevind / Skruegjenge								
M5	1,7	2	5	6	7	9	8	10
M6	3	4	9	10	13	15	15	18
M8	8	9	21	25	31	36	36	42
M10	16	19	40	50	60	70	70	85
M12	27	32	70	85	105	120	120	145
M14	42	50	115	135	165	195	195	230
M16	65	76	175	210	260	300	300	350
M18	90	110	250	290	350	420	410	490
M20	125	150	350	420	500	600	580	700
M22	170	200	470	560	670	800	780	930
M24	210	250	600	710	860	1020	1000	1180

* **NL** De wrijvingscoëfficiënt van 0,10 geldt voor geoliede plaat, gietijzer, geharde vlakken, vette schroefdraad, etc. De hogere waarde van 0,13 geldt voor een droge plaat. Uitzonderingen op deze tabel zijn vermeld in het onderdelen- en/of instructieboek. Aanhaalmomenten voor bouten en moeren met gekartelde onderkant, zoals Tensilock en Whizlock, 10% extra.

* **EN** The friction coefficient of 0.10 applies to oiled sheet, cast iron, hardened surfaces, greasy thread, etc. The higher value of 0.13 applies to dry sheet. Exceptions to this table are stated in the parts- and /or instruction manual. Torques for bolts and nuts with a knurled underside, like Tensilock and Whizlock, 10% extra.

* **DE** Der Reibungskoeffizient von 0,10 gilt für geölte Flächen, Gußeisen, gehärtete Flächen, gefettetes Gewinde usw. Der höhere Wert von 0,13 gilt für trockene Flächen. Ausnahmen zu dieser Tabelle sind im Ersatzteilhft und/oder in der Betriebsanleitung. Anzugsmomente für Schrauben und Muttern mit gerändelter Unterseite, wie Tensilock und Whizlock, zuzüglich 10% extra.

* **FR** Le coefficient de frottement de 0,10 s'applique aux surfaces huilées, à la fonte, aux surfaces trempées, aux filetages graissés etc. Le coefficient de 0,13 aux surfaces sèches. Les exceptions à se tableau sont mentionnées dans la nomenclature des pièces et/ou dans le manuel d'emploi. Ajoutez 10% pour les boulons et écrous á partie inférieure crénelée, comme les Tensilock et les Whizlock.

* **ES** El coeficiente de fricción de 0,10 es indicado para planchas lubricadas, hierro fundido, superficies endurecidas, rosca grasienta, etc. El valor más alto de 0,13 es para planchas secas. Las excepciones a este cuadro se mencionan en el libro de repuestos y/o manual de instrucciones. Los pares de apriete para tonillos y tuercas con cara inferior dentada, como los Tensilock y Whizlock, 10% extra.

* **PT** O coeficiente de atrito de 0.10 aplica-se às superficies olcadas, ao ferro fundodo,às superficies temperadas, às roscas emassadas etc. O coeficiente de 0.13 às superficies secas. As excepções a este quadro estão mencionadas na nomenclatura das peças e/ou no manual de instruções. Os binarios de aperto para porcas e parafusos cujas bases sejam serradas (Tensilock, Whizlock) devem ser aumentados em 10%.

* **IT** Il coefficiente di frizione pari a 0,10 si riferisce a superfici oliate, alla ghisa, a superfici temprate, a filettature spesse ecc. Il valore più alto, npari a 0,13, si riferisce a superfici asciutte. Tutte le eccezioni a quanto riportato in questa tabella, si trovano nel libretto dei pezzi o nel libretto delle istruzioni. I momenti torcenti per bulloni e dadi la cui parte inferiore è zigrinata, come i Tensilock (K 100) e Whizlock, sono superiori del 10%.

* **DA** Friktionskoefficienten på 0,10 gælder for smurte flader, støbejern, hærdede overflader, fedtholdige gevind etc. Den højere værdi på 0,13 gælder for tørre flader. Undtagelser til tabelllen er angivet i reservedels- og/eller instruktionsbog. Når det drejer sig om momenter for bolte og møtrikkers med en riflet underside, som Tensilock (K100) og Whizlock, skal der tilføjes 10% ekstra.

* **NO** Friksjonskoeffisenten på 0,10 gjelder for smurt plate, støpejern, herdete flater, innfettete gjenger etc. Den høyere verdien på 0,13 gjelder for tørr plate. Unntak fra denne tabellen er angitt i deleboken og/eller i instruksjonsboken. Tiltrekkingsmomenter for skruer og mutre med riflet underkant, som Tensilock (K100) og Whizlock 10% tillegg.

VRIDMOMENT / MOMENTY OBROTOWE / UTAHOVACí MOMENTY / МОМЕНТ ЗАТЯГИВАНИЯ / PRIVIJALNI MOMENTI / MEGHÚZÁSI NYOMATÉKOK

SV Anvisningar för vridmoment (i Nm) för självlåsande muttrar, sexkantiga bultar och muttrar.

CS Směrnice pro utahovací momenty (v Nm) pro samosvorné matice, šrouby a matice s šestihran hlavou

SL Navodila za privijalne (navorne) momente (v Nm) za matice in vijake.

PL Wytyczne dotyczące momentów obrotowych (w Nm) nakrętek samozabezpieczających, śrub z łbem sześciokątnym i nakrętek.

RU Указания для моментов затягивая (в Нm) для самоблокиоующихся гаек, шестигранных болтов и гаек.

HU Előírt meghúzási nyomatékok (Nm-ben) az önzáró anyákhoz, hatlapfejű csavarokhoz és anyákhoz.

Kvalitet / Jakość /Jakost / Качество / Kvaliteta / Minőség	4.6		8.8		10.9		12.9	
Friktion / Tarcie / Třeni / Трение / Trenje / Súrlódás *	0,10	0,13	0,10	0,13	0,10	0,13	0,10	0,13
Gänga / Gwint / Závit / Резьба Navoj / Menet								
M5	1,7	2	5	6	7	9	8	10
M6	3	4	9	10	13	15	15	18
M8	8	9	21	25	31	36	36	42
M10	16	19	40	50	60	70	70	85
M12	27	32	70	85	105	120	120	145
M14	42	50	115	135	165	195	195	230
M16	65	76	175	210	260	300	300	350
M18	90	110	250	290	350	420	410	490
M20	125	150	350	420	500	600	580	700
M22	170	200	470	560	670	800	780	930
M24	210	250	600	710	860	1020	1000	1180

* **SV** Friktionskoefficienten 0,10 gäller oljad plåt, gjutjärn, härdade ytor, smorda gängor etc. Det högre värdet 0,13 gäller torr plåt. Undantag från denna tabell anges i reservdels- och/eller instruktionsboken. Åtdragningsmoment för räfflade bultar och muttar, som Tensilock och Whizlock 10% extra.

* **PL** Współczynnik tarcia 0,10 dotyczy płyty oliwionej, żeliwa, powierzchni hartowanych, nasmarowanych gwintów, itp. Wyższy współczynnik 0,13 dotyczy płyty suchej. Wyjątki od niniejszej tabeli podano w katalogu części i/lub instrukcji. Momenty obrotowe zwiększają się o dodatkowe 10% w przypadku śrub i nakrętek z radełkowanym spodem, jak na prykład, Tensilock (K100) o Whizlock.

* **CS** Koeficient třeni 0.10 platí pro naolejovaný plech, litinu, kalené povrchy, namazaný závit a tak dále. Vyšší hodnota 0.13 platí pro suchý plech. Výjimky z této tabulky jsou uvedeny v seznamu náhradních dílù a/nebo v provozním návodu. Utahovací momenty pro šrouby a matice s rýhovanou spodní stranou 10% navíc, jako např. Tensilock (K100), Whizlock.

* **RU** Коэффициент трения в 0,10 относится к смазанным плитам, чугуну, затвердевшим поверхностям резьбе с нанесенной смазкой и т.д. Более высокое значение в 0,13 относится к сухим плитам. Исключения для данной таблицы указаны в брошюре с описанием рабочих деталей и/или инструкции по зксплуатации. Моменты затягивания для болтов и гаек с зазубренной стороной выше на 10% Для таких как, Tensilock (k 100) и Whizlock.

* **SL** Koeficient trenja 0,10 velja za naoljene površine, litino, kovane površine, namazane navoje itd. Višja vrednost 0,13 velja za suhe površine. Izjeme v tej tabeli so v zvezku rezervnih delov ali pa v navodilu o uporabi navedene. Navornim momentom za vijake in matice z naribano spodnjo površino, kot so Tensilock (K100) in Whizlock, dodamo 10%.

* **HU** A 0,10 súrlódási tényezõ az olajazott lemezekre, öntöttvasra, edzett felületekre, zsírozott menetre, stb alkalmazható. A 0,13 asmagasabb érték a száraz lemezekre alkalmazható. E táblázat alól kivételt képezõ tételek az alkatrészeknél és/vagy a gépkönyvekben vannak felsorolva. A meghúzási nyomaték az alsó peremen bordázott csavarok és anyák esetében 10%-kal nagyobb, pl. Tensilock (K100) és Whizlock.

EXACTA-CL

02236 < Mach. ID <=

Kverneland Group Nieuw-Vennep
Kverneland Group Nieuw-Vennep BV
Hoofdweg 1278
2153 LR Nieuw-Vennep
Netherlands
+31 252 662244
+31 252 662173

© Kverneland Group

All rights reserved. No parts of this book may be reproduced, stored in a database or retrieval system, or published in any form or in any way, electronically, mechanically, optically, by print, photo print, microfilm (including micro and macro fiche), or any other means, including all video and CD systems, without prior written permission from the publisher.

Print date: 2011-08-23