Kverneland

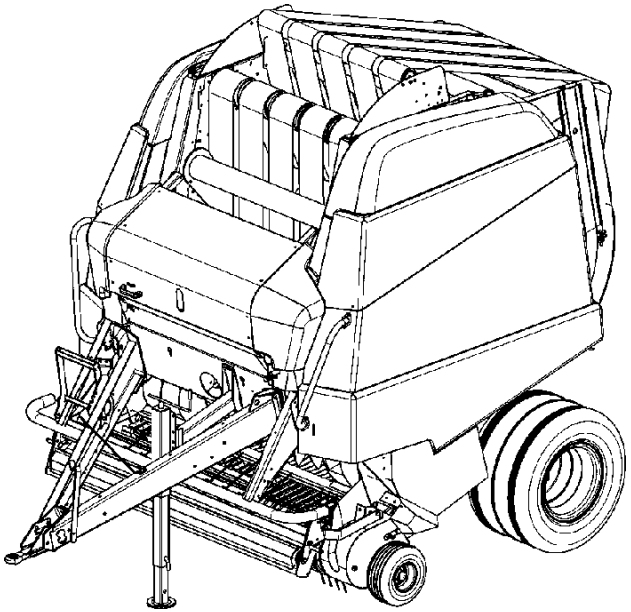

6490

Spare Parts Manual

Article number:	VGP0902RL(8)
Language:	EN
Production year (from):	2009
Prod. Series nr (from):	04RL02
VGRL001345 < Mach. ID <=	

kverneland group

6490 / Table of Contents

PosNo.	Assembly group	Page
1	DRIVE PRIMARY	1
1	DRIVE, MAIN	2
2	HITCHING EQUIPMENT	3
2	EYE, DRAW BAR	4
3	UNDERCARRIAGE, CPL.	5
3	BRAKE, HYDR.	6
3	BRAKE, AIR	7
3	PARKING BRAKE	8
3	BRAKE	9
3	BRAKE	10
3	VALVE UNIT, AIR	11
4	CHOPPING ROLLER	12
4	CHOPPING ROLLER	13
5	ROLLERS, TOP	14
6	ROLLERS	15
7	ROLLERS	16
7	ROLLERS	17
7	ROLLERS	18
8	DRIVE, CHAIN-	19
8	DRIVE, CHAIN-	20
8	DRIVE, CHAIN-	21
8	DRIVE, CHAIN-	22
8	DRIVE, CHAIN-	23
9	TAILGATE	24
10	BELTS	25
11	HYDRAULICS	26
12	CONNECTIONS, ELEC.	27
12	CONNECTIONS, ELEC.	28
12	CONTROL BOX	29
13	INDICATOR	30
14	NET WRAP SET	31
14	NET WRAP SET	32
14	DRIVE, NET WRAP	33
14	GUIDE CPL.	34
14	GUIDE CPL.	35
14	TWINE TIE FRAME	36
14	TWINE TIE SYSTEM	37
14	BOX, TWINE	38
15	PICK-UP, CPL. (WPU)	39
15	AXLE, TINE CARR. (WPU)	40

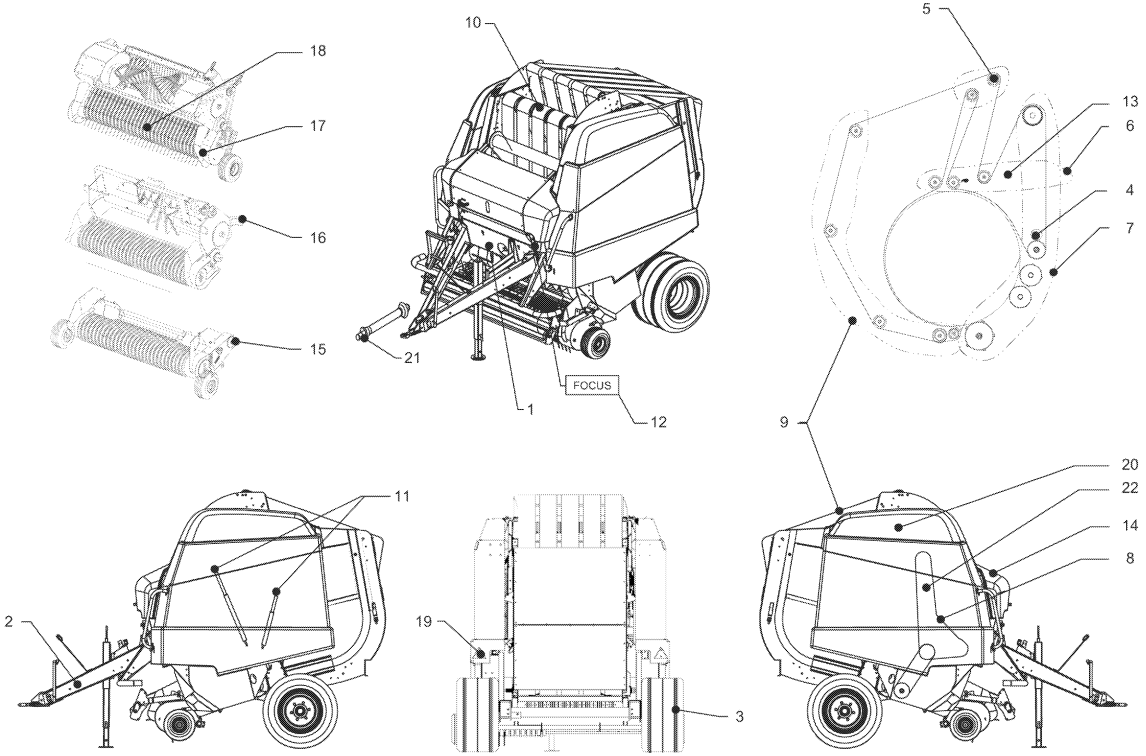

6490 / Table of Contents

PosNo.	Assembly group	Page
15	DRIVE (WPU)	41
15	GAUGE WHEEL, PICK-UP (WPU)	42
15	PLATE, GUIDE (WPU)	43
15	CROP GUIDE CPL. (WPU)	44
15	CYLINDER, PICK-UP (WPU)	45
16	DRIVE (R+14-OC +XL-R+OC23)	46
16	TENSIONER, CHAIN (R+OC-14)	47
16	ROTOR (R + 14-OC)	48
16	GAUGE WHEEL, PICK-UP (R+14-OC + XLR +23-OC)	49
16	GAUGE WHEEL, PICK-UP, CPL.	50
16	CROP GUIDE CPL. (R+14-OC + XL-R + 23-OC)	51
16	PICK-UP, CPL. (R+14-OC)	52
16	FRAME, PICK-UP (R+14-OC)	53
16	FRAME (R + 14-OC)	54
16	FRAME, KNIVES 14-OC	55
16	CYLINDER, PICK-UP (14-OC + 23-OC SS)	56
16	SENSOR ASSY	57
16	CILINDER, PICK-UP (XL-R + R)	58
17	DRIVE (23-OC+XL-R)	59
17	FRAME, KNIVES (23OC-SS)	60
17	FRAME, KNIVES (23-OC HP)	61
17	CILINDER, PICK-UP (23-OC HP)	62
17	FRAME, GUIDE (23-OC)	63
17	PICK-UP ASSY (XL-R, OC-23)	64
17	CHAIN TENSIONER (23OC+23OC-SS)	65
17	PROTECTION (23-OC + XL-R)	66
18	FRAME, GUIDE (XL-R)	67
19	LIGHTING SET	68
20	PROTECTION, CPL.	69
20	TWINE ONLY	70
20	RAIL, GUARD	71
21	SHAFT, UNIV. JOINT (WPU)	72
21	SHAFT, UNIV. JOINT AUTOPLUS	73
21	SHAFT, UNIV. JOINT (R+14-OC + XL-R)	74
21	SHAFT, UNIV. JOINT (23-OC)	75
22	DECAL SCHEME	76
22	DOCUMENTATION	77
99999	LUBRICATION SYSTEM	78

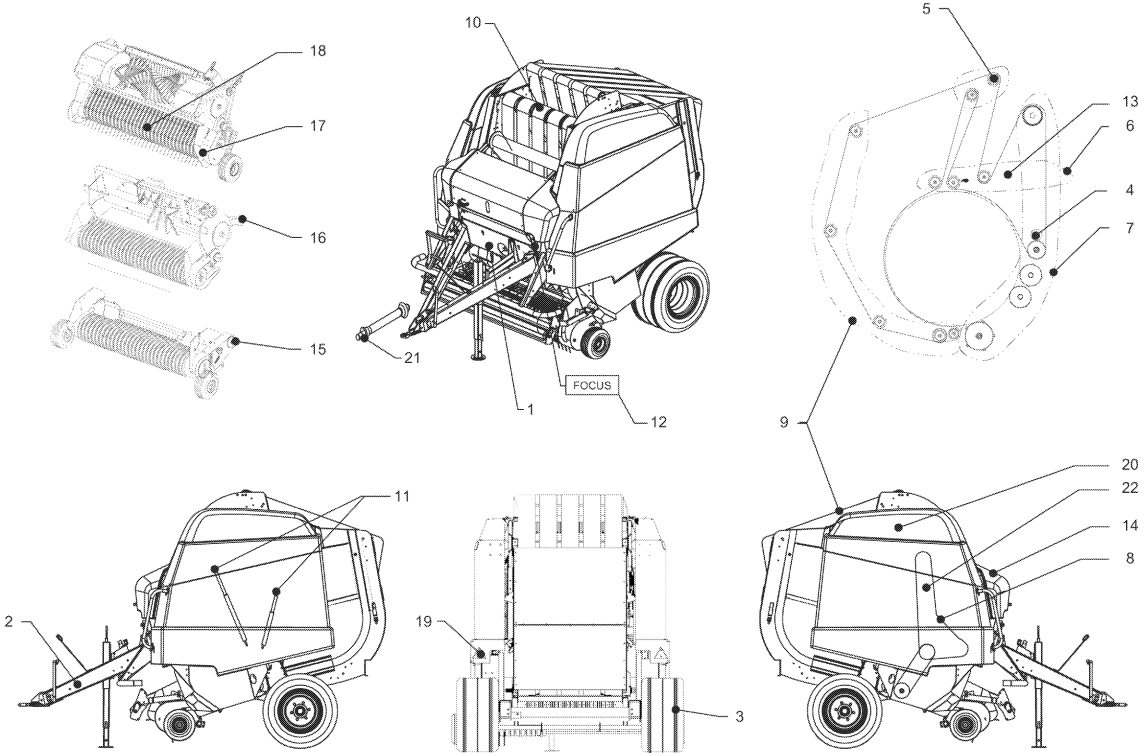

6490 / Table of Contents

PosNo.	Assembly group	Page
99999	LUBRICATION SYSTEM	79
99999	FLAX KIT	80
99999	MIXED CHAMBER OPTION	81
99999	RAMP, BALE, CPL.	82
99999	HITCH CLEVIS, CPL.	83
99999	1000 RPMSET	84
99999	ACCESSOIRES VARIOUS	85
99999	PICK-UP ROLLER	86
99999	PICK-UP ROLLER	87
99999	POWER PUSH DEVICE	88

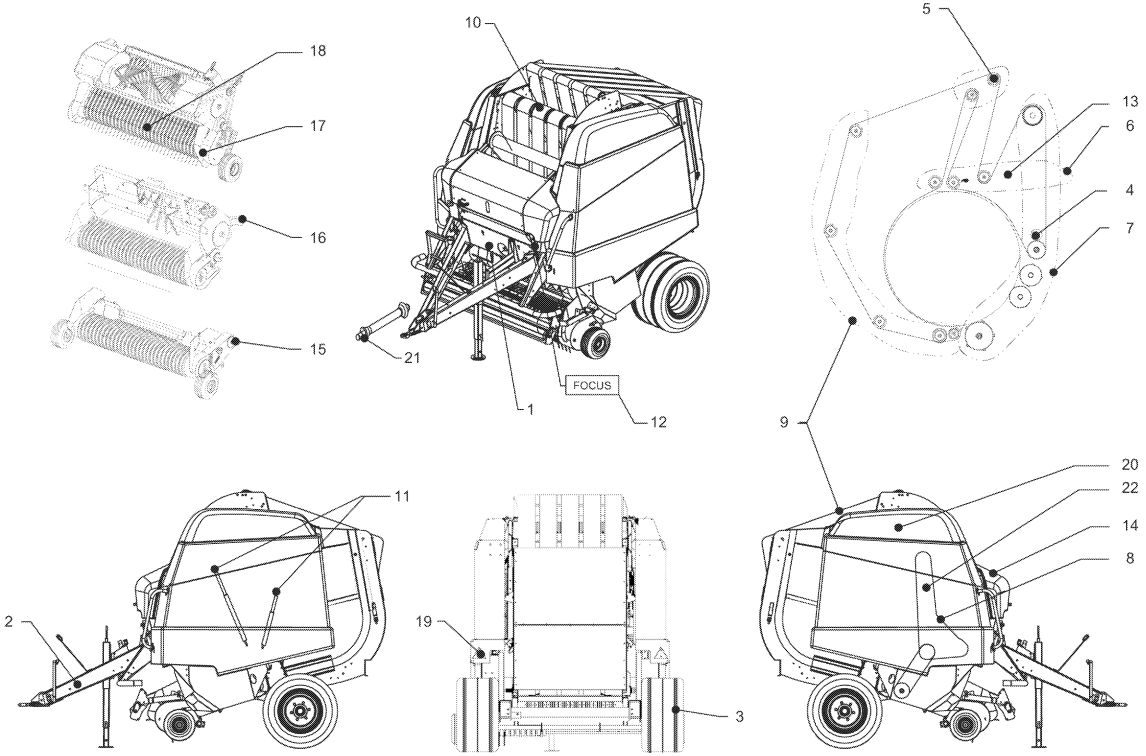

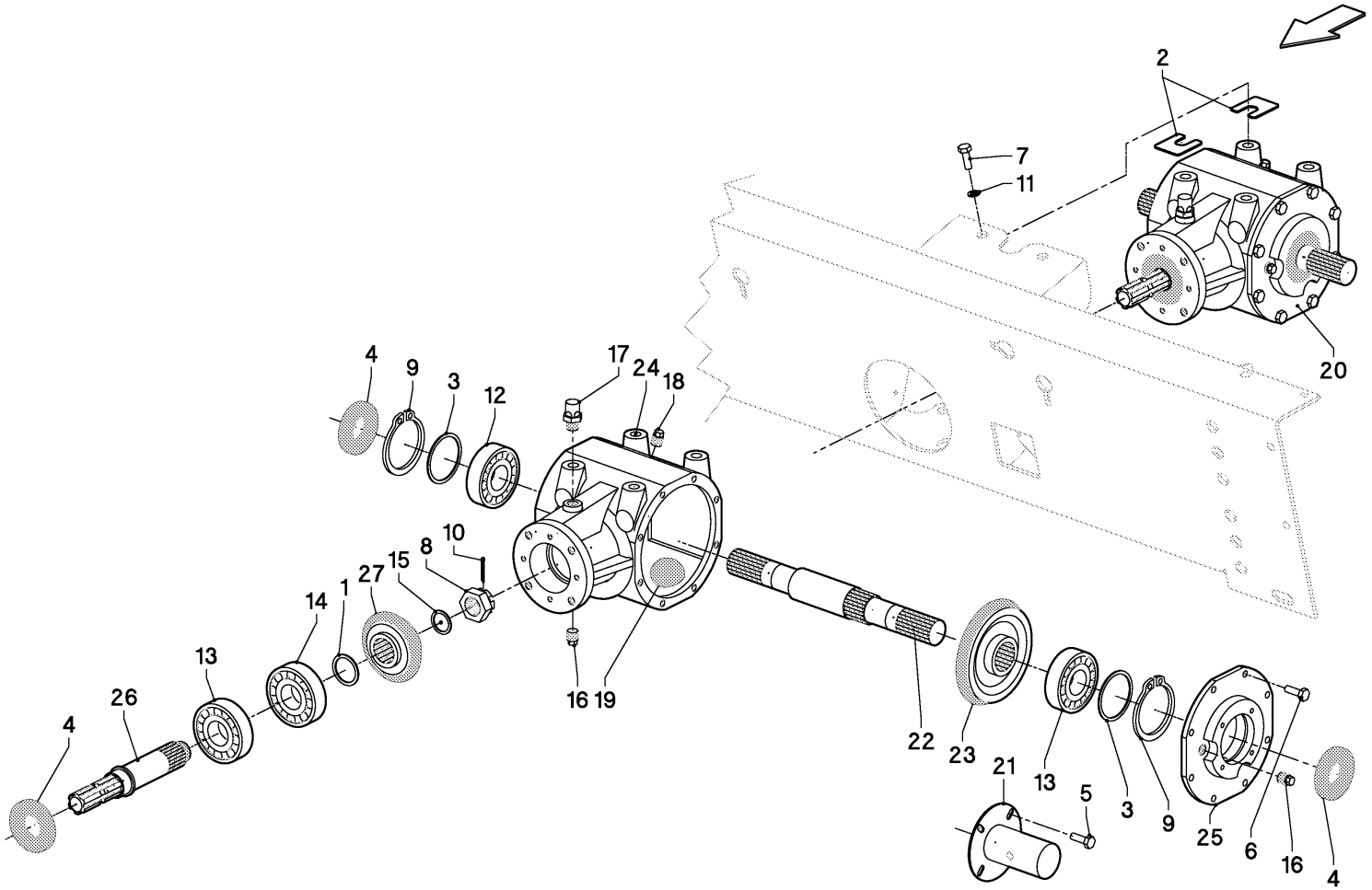
2
7
11
20
4
9
3
12
17
24
18
10
8
15
27
1
14
13
26
4
16
19
22
23
21
13
5
3
9
25
6
16
4

WA00154

6490 / DRIVE PRIMARY

PosNo.	Part No.	Qty.	Description	Remark
1	VGAH00132		SHIM SET	
2	VGGP611V		PLATE, SHIM	GIVE QUANTITY WHEN ORDERING
3	VGGS0089		SHIM SET	
4	KG00160200	3	RADIAL SHAFT SEAL - AS 40X80X10	
5	KG00471761	4	HEX. SCREW M8X16 8.8	
6	KG00474261	8	HEX. SCREW M10X25 8.8	
7	KG00480161	6	HEX. SCREW M16X35 8.8	
8	KG01081800	1	CASTLE NUT M30X1.5 8	
9	KG01119100	2	CIRCLIP-B 80 X 4	
10	KG01252061	1	SPLIT PIN 4X50 ST	
11	KG01282061	6	SPRING WASHER M16	
12	KG01382800	1	BALL BEARING 6208	
13	KG01799800	2	TAPER ROLLER BEARING 30208	
14	KG01800100	1	TAPER ROLLER BEARING 30308	
15	VGMT00310	1	SHIM SET	
16	VGND92092V	3	PLUG	
17	VGND92093V	1	BREATHER	
18	VGND92155V	1	PLUG, MAGNETIC	
19	VGND9824		OMALA 100 SHELL(OLIE/LTR.BULK)	2 L.
20	VGWA00154	1	GEARBOX ASSY	
21	VGWA1809	1	COVER, PLASTIC	
22	VGWA734	1	AXLE	
23	VGWA735	1	WHEEL, TOOTHED	
24	VGWA736	1	GEARBOX	
25	VGWA737	1	LID	
26	VGWA738	1	AXLE	
27	VGWA739	1	WHEEL, TOOTHED	

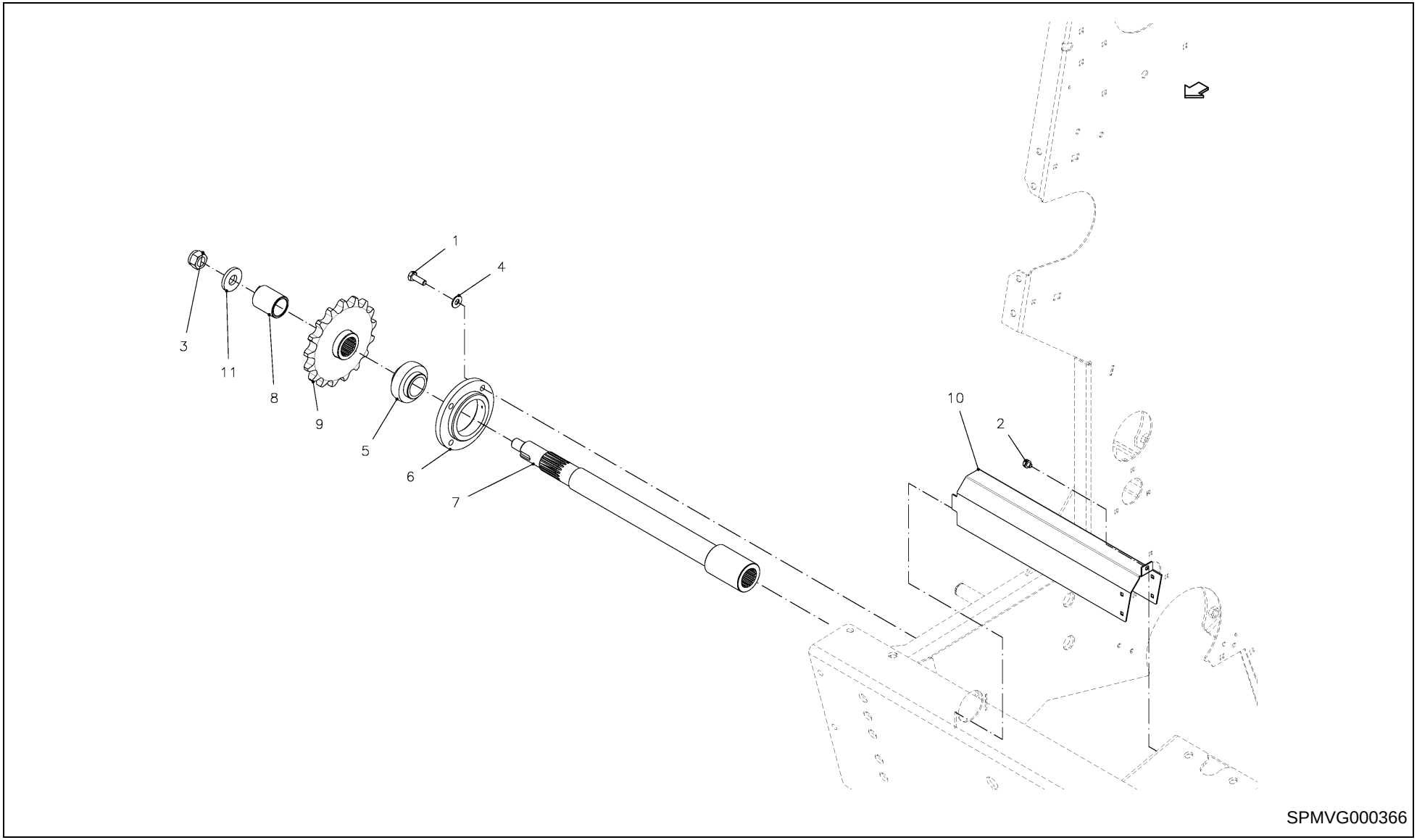
1
4
3
11
8
9
5
6
7
10
2
SPMVG000366

6490 / DRIVE, MAIN

PosNo.	Part No.	Qty.	Description	Remark
1	KG00474361	4	HEX. SCREW M10X30 8.8	
2	KG01000661	1	FLANGED BOLT M8X15	
3	KG01069261	1	NUT, LOCK	
4	VGND3147V	4	RING	
5	VGND5022	1	CUSHION, BALL, SPEC.	
6	VGND5117	1	HOUSING, CUSHION	
7	VGRL062K0	1	SHAFT, DRIVE	
8	VGUH697V	1	SLEEVE	TWINE ONLY
9	VGWA02070	1	SPROCKET	
10	VGWA490	1	GUARD, PROTECT.	
11	VGWA491V	1	RING	

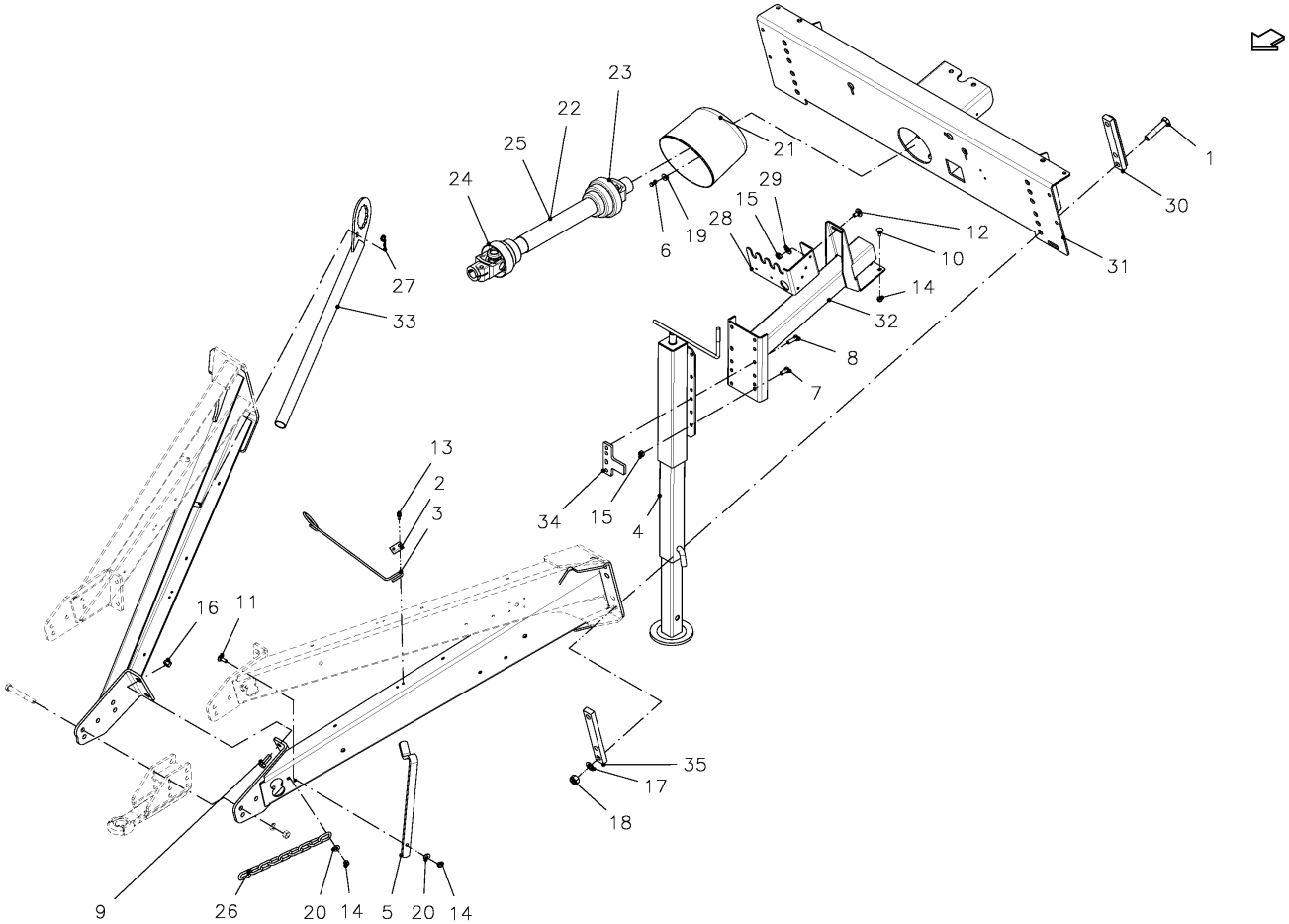

SPMVG000861

6490 / HITCHING EQUIPMENT

PosNo.	Part No.	Qty.	Description	Remark
1	VF16618111	6	HEX. HEAD SCREW	
2	VG19017027V	1	BRACE	
3	VG19157033V	1	STAY	
4	VGBR001029	1	JACK STAND	
5	VGBR155	1	SUPPORT	
6	KG00471761	2	HEX. SCREW M8X16 8.8	
7	KG00476561	4	HEX. SCREW M12X30 8.8	
8	KG00476761	2	HEX. SCREW M12X40 8.8	
9	KG00480261	2	HEX. SCREW M16X40 8.8	
10	KG00641461	2	CARRIAGE BOLT M10X25 8.8	
11	KG00641561	2	CARRIAGE BOLT M10X30 8.8	
12	KG00644761	1	CARRIAGE BOLT M12X25 8.8	
13	KG01000861	2	FLANGED BOLT M8X25	
14	KG01068861	4	LOCK NUT M10 10	
15	KG01068961	7	LOCK NUT M12 10	
16	KG01069161	2	LOCK NUT M16 10	
17	KG01267961	6	WASHER M20	
18	KG01840561	1	NUT, LOCK	
19	VGND3030V	1	WASHER, PLAIN	
20	VGND3147V	2	RING	
21	VGND94053	1	GUARD CONE	
22	VGND94117	1	SHAFT, UNIV. JOINT	R + XL-R + 14-OC
23	VGND94118	1	SHAFT, UNIV. JOINT	23-OC
24	VGND94119	1	SHAFT, UNIV. JOINT	WPU
25	VGND94120	1	SHAFT, UNIV. JOINT	
26	VGND98137V	1	CHAIN	
27	VGPZ160V	1	SPRING CLIP	
28	VGRL442K0	1	SUPPORT	
29	VGTH100V	1	RING	
30	VGWA01048	2	STRIP	
31	VGWA0142	1	BEAM, INTERMEDIATE	
32	VGWA0512	1	SUPPORT	
33	VGWA0912	1	SPANNER	R + XL-R + 14-OC + 23-OC
34	VGWA1991	1	PLATE	
35	VGWA625	2	STRIP	

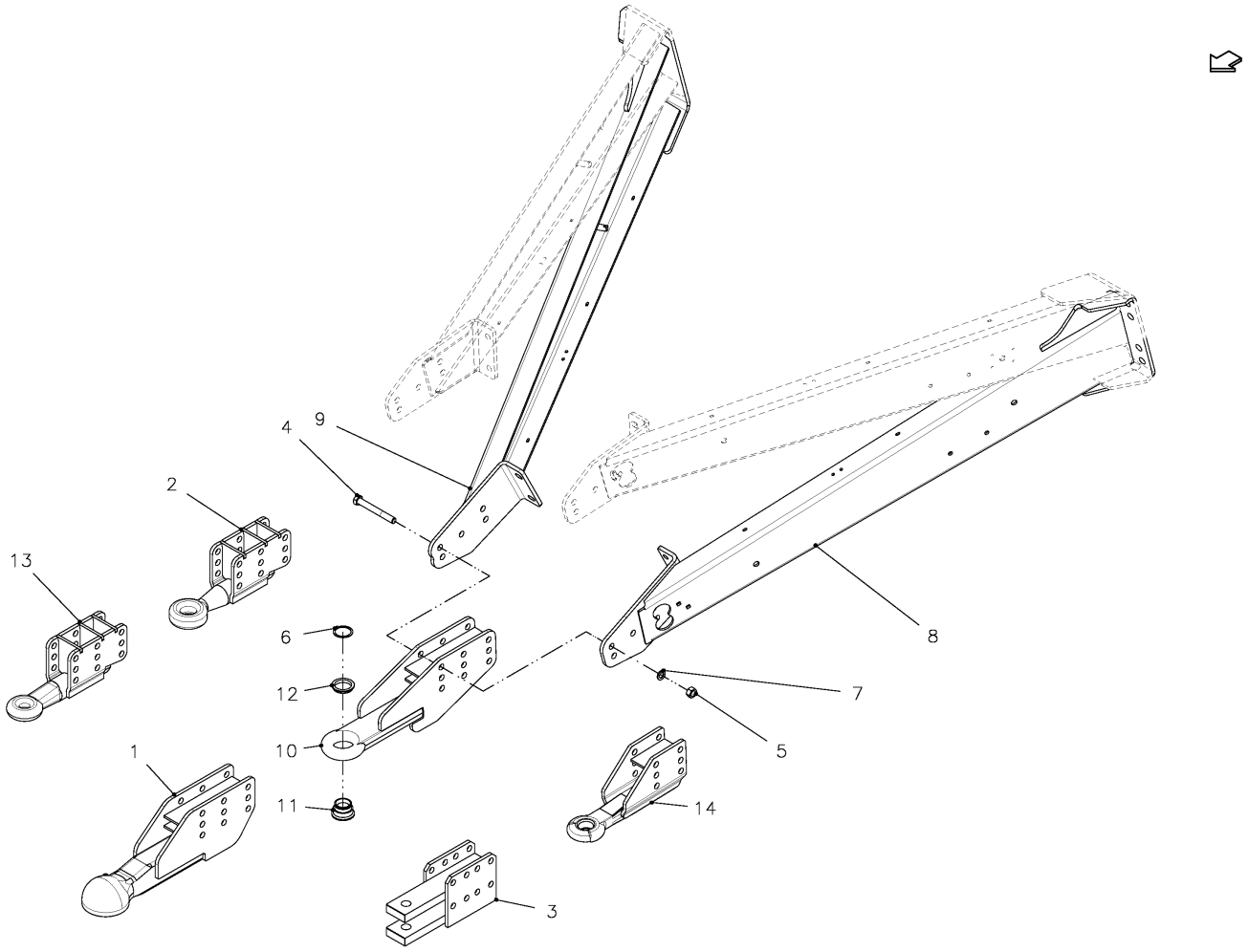

SPMVG000876

6490 / EYE, DRAW BAR

PosNo.	Part No.	Qty.	Description	Remark
1	VF16659365.86	1	DRAW BAR, BALL-	OPTIONAL EQUIPMENT
2	VG25265014	1	EYE, DRAW BAR	OPTIONAL EQUIPMENT
3	VG25276045	1	HITCH CLEVIS	OPTIONAL EQUIPMENT
4	VG37305654V	4	BOLT, NUTTED	
5	KG01052361	4	HEX. NUT M16 8	
6	KG01110162	1	CIRCLIP-A 45 X 1.75	
7	KG01282061	4	SPRING WASHER M16	
8	VGRL0630K0	1	DRAW BAR HALF, RH	
9	VGRL0631K0	1	DRAW BAR HALF, LH	
10	VGRV0108K0	1	EYE, DRAW BAR	OPTIONAL EQUIPMENT
11	UH301275	1	BUSHING	
12	UH301276	1	RING	
13	VGWA01657	1	EYE, DRAW BAR	OPTIONAL EQUIPMENT
14	VGWA0647	1	EYE, DRAW BAR	

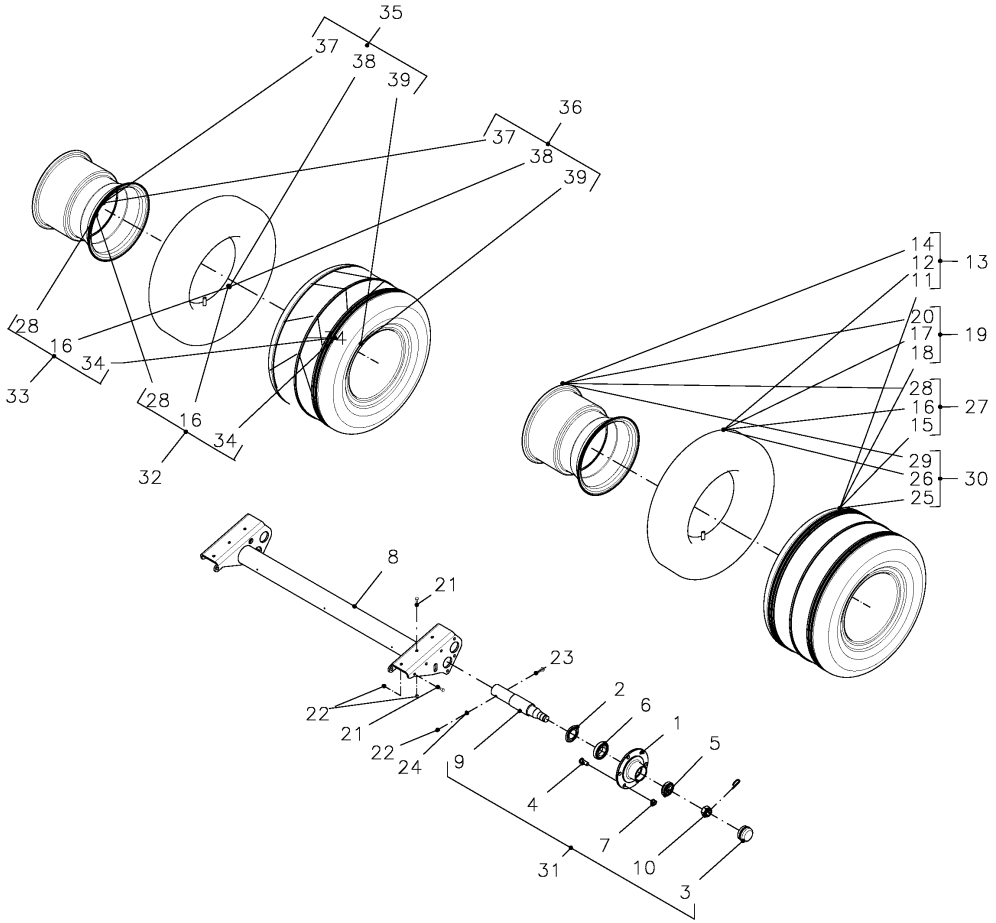

SPMVG000585

6490 / UNDERCARRIAGE, CPL.

PosNo.	Part No.	Qty.	Description	Remark
1	VGBR550	2	HUB, WHEEL, 6-HOLE	
2	VGBR552	2	SEAL	
3	VGBR553	2	COVER, WHEEL	
4	VGBR554	12	BOLT, WHEEL	
5	KG01799800	2	TAPER ROLLER BEARING 30208	
6	KG01802500	2	TAPER ROLLER BEARING 30211	
7	VGND2134V	12	NUT, WHEEL	
8	VGWA02044K0	1	UNDERCARRIAGE	
9	VGWA2016	2	WHEEL AXLE	
10	VGBR001091	2	NUT, CASTLE ASSY.	
11	VF01142334	2	TYRE 19,0/45-17IMP 10PR	
12	VF01142668	2	AIR CHAMBER	
13	VF16615268	2	WHEEL, CPL.	19"
14	VF16616018	2	RIM	
15	VG38722004	2	TYRE	
16	VG38723002	2	AIR CHAMBER	
17	VN43603311	2	INNERTUBE 500/50-17T15	
18	VN43605800	2	ROLLTUBE	
19	VN79770282	2	WIEL 500/50-17AW-10PR/6(B=100)	500/50
20	VNB2149998	2	WHEEL	
21	KG00476561	12	HEX. SCREW M12X30 8.8	
22	KG01068961	14	LOCK NUT M12 10	
23	VGND1181V	2	BOLT, NUTTED	
24	VGND3148V	2	CIRCLIP	
25	VGND97011	2	TYRE	
26	VGND97012	2	AIR CHAMBER	
27	VGND97026	2	2 REIFEN 15.0/55-17 (FACTORY FITTED)	15"
28	VGND97027	2	RIM	
29	VGND97041	2	RIM	
30	VGND97042	2	WHEEL	11,5"
31	VGWA002016K0	2	HUB, WHEEL, 6-HOLE, ASSY	
32	VGND97052	1	WHEEL, CPL. RH	
33	VGND97053	1	WHEEL, CPL. LH	
34	VGND97054	2	TYRE	
35	VF16656655	1	RAD LI. 500/45-22,5 AS ET-95	
36	VF16656656	1	RAD RE. 500/45-22,5 AS ET-95	
37	VF16657583	2	RIM	16.00X22.5
38	VF16657584	2	INNER TUBE	
39	VF16657582	2	TYRE	

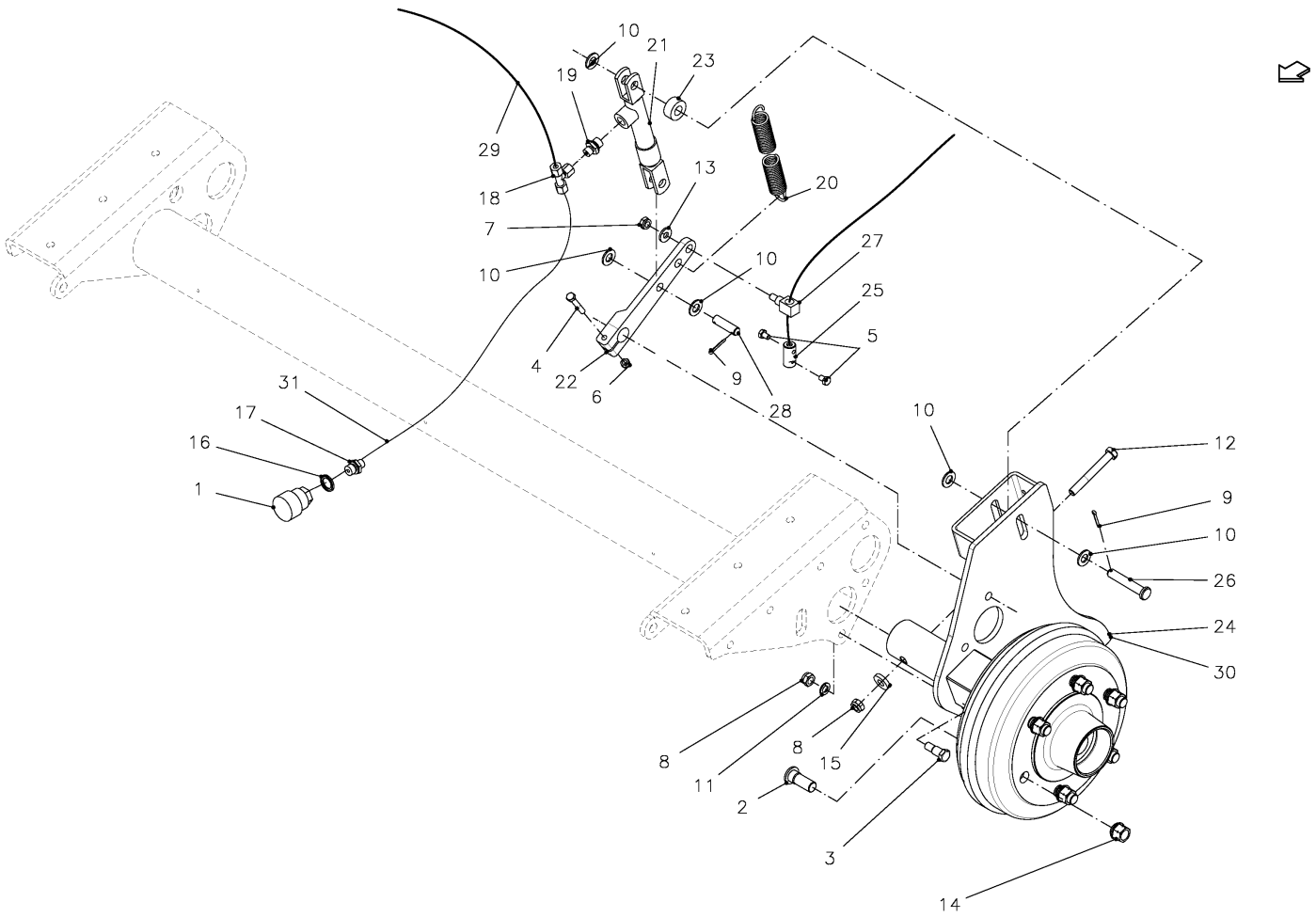

SPMVG000867

6490 / BRAKE, HYDR.

PosNo.	Part No.	Qty.	Description	Remark
1	VF16613256	1	HYDR.PIPE	
2	VGBR554	12	BOLT, WHEEL	
3	VGEP28V	4	BOLT, TIGHT-FIT	
4	KG00353461	2	HEX. BOLT M8X50 8.8	
5	KG00471561	2	HEX. SCREW M8X12 8.8	
6	KG01068761	2	LOCK NUT M8 10	
7	KG01068861	2	LOCK NUT M10 10	
8	KG01068961	6	LOCK NUT M12 10	
9	KG01251561	6	SPLIT PIN 4X25 ST	
10	KG01267661	10	WASHER M14	
11	KG01281861	4	SPRING WASHER M12	
12	VGND1181V	2	BOLT, NUTTED	
13	VGMH416V	2	RING	
14	VGND2134V	12	NUT, WHEEL	
15	VGND3148V	2	CIRCLIP	
16	VGND3156	1	RING, SEALING	
17	VGND92044V	1	COUPLING	
18	VGND92154V	1	T-COUPLING, ADJUSTABLE	
19	VGND9869V	2	STUD COUPLING	
20	VGPZ415K0	2	SPRING, TENSION	
21	VRR0834182	2	CYLINDER	
22	VGRL272	2	LEVER	
23	VF16654449	2	DISTANZHÜLSE	
24	VGWA002033K0	1	BRAKE DRUM, LH	
25	VGWA1684V	2	CLAMP, CABLE	
26	VGWA1717V	2	PIN	
27	VGWA1719V	2	AXLE	
28	VGWA1749V	2	PIN	
29	VGBF71	1	HOSE, HP	
30	VGWA002034K0	1	BRAKE DRUM, RH	
31	VGWA548	1	HOSE, HP	

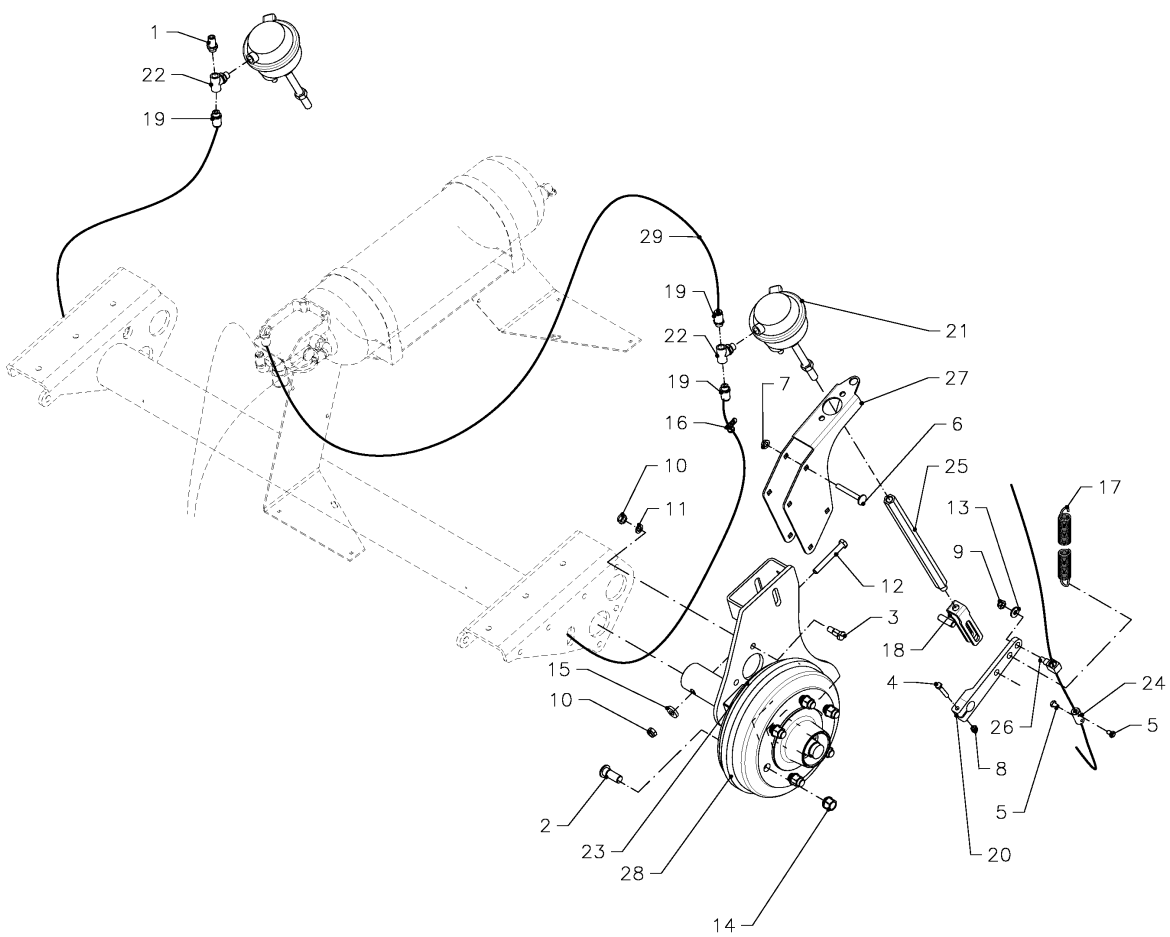

SPMVG000149

6490 / BRAKE, AIR

PosNo.	Part No.	Qty.	Description	Remark
1	VR38222332	1	CONNECTOR	
2	VGBR554	12	BOLT, WHEEL	
3	VGEP28V	4	BOLT, TIGHT-FIT	
4	KG00353461	2	HEX. BOLT M8X50 8.8	
5	KG00471561	4	HEX. SCREW M8X12 8.8	
6	KG00642561	4	CARRIAGE BOLT M10X80 8.8	
7	KG01061361	4	LOCK NUT M10 8	
8	KG01068761	2	LOCK NUT M8 10	
9	KG01068861	2	LOCK NUT M10 10	
10	KG01068961	6	LOCK NUT M12 10	
11	KG01281861	4	SPRING WASHER M12	
12	VGND1181V	2	BOLT, NUTTED	
13	VGMH416V	2	RING	
14	VGND2134V	12	NUT, WHEEL	
15	VGND3148V	2	CIRCLIP	
16	VGND90026	2	CLAMP HOSE-	
17	VGPZ415K0	2	SPRING, TENSION	
18	VRR0205101	2	YOKE ASSY	
19	VRR0546501	3	COUPLING	
20	VGRL272	2	LEVER	
21	VGWA001740	2	CYLINDER, PNEUM.	
22	VGWA001741	2	COUPLING, BULKHEAD, T	
23	VGWA002033K0	1	BRAKE DRUM, LH	
24	VGWA1684V	2	CLAMP, CABLE	
25	VGWA1702V	2	PIN	
26	VGWA1719V	2	AXLE	
27	VGWA2048K0	2	SUPPORT	
28	VGWA002034K0	1	BRAKE DRUM, RH	
29	VGGP588	1	HOSE	

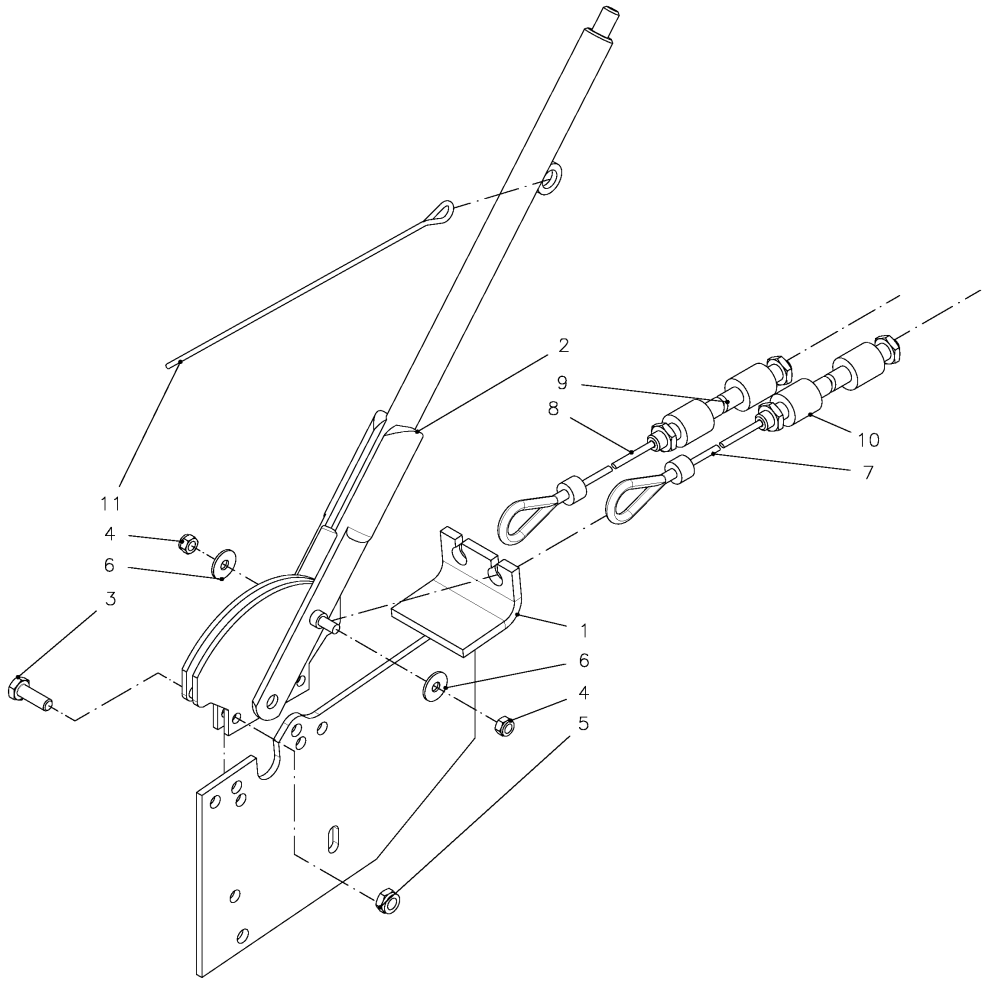

SPMVG000379

6490 / PARKING BRAKE

PosNo.	Part No.	Qty.	Description	Remark
1	VF16650129.86	1	BASE PLATE	
2	VF16650192	1	HAND BRAKE LEVER	
3	KG00474361	2	HEX. SCREW M10X30 8.8	
4	KG01068761	2	LOCK NUT M8 10	
5	KG01068861	2	LOCK NUT M10 10	
6	VGND3030V	2	WASHER, PLAIN	
7	VGWA1734	1	TUBE, CABLE	
8	VGWA1735	1	CABLE, CORE	
9	VGWA1736	1	TUBE, CABLE	
10	VGWA1737	1	TUBE, CABLE	
11	VF06560636	1	PULL ROPE	

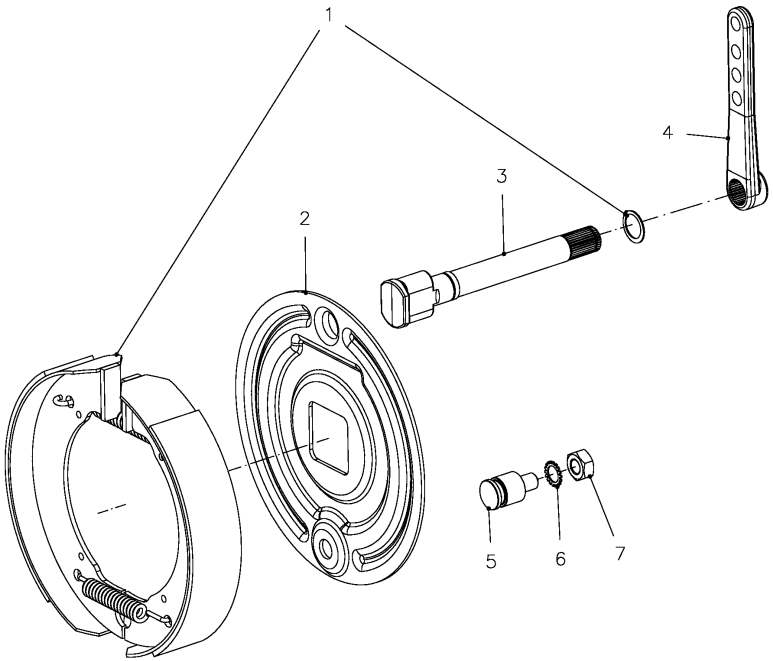

SPMVG000247

6490 / BRAKE

PosNo.	Part No.	Qty.	Description	Remark
1	VGRL269	1	SHOE, BRAKE	
2	VGRL270	1	PLATE	
3	VGRL271	1	AXLE	
4	VGRL272	1	LEVER	
5	VGRL275	1	BOLT, SPEC.	
6	KG01286461	1	SPRING WASHER M16	
7	KG01050761	1	HEX. NUT M16 10	

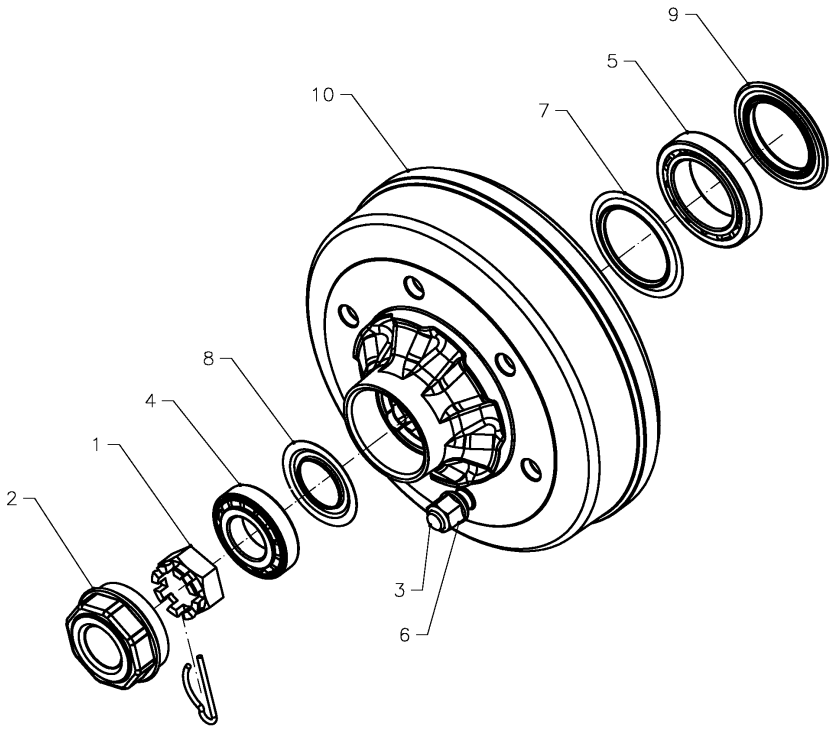

SPMVG000246

6490 / BRAKE

PosNo.	Part No.	Qty.	Description	Remark
1	VGBR001091	1	NUT, CASTLE ASSY.	
2	VGBR553	1	COVER, WHEEL	
3	VGBR554	6	BOLT, WHEEL	
4	KG01799800	1	TAPER ROLLER BEARING 30208	
5	KG01803900	1	TAPER ROLLER BEARING 32013 X	
6	VGND2134V	6	NUT, WHEEL	
7	VGND6373	1	RING, SEALING	
8	VGND6374	1	RING, SEALING	
9	VGND6375	1	OIL SEAL	
10	VGRL274	1	BRAKE DRUM	

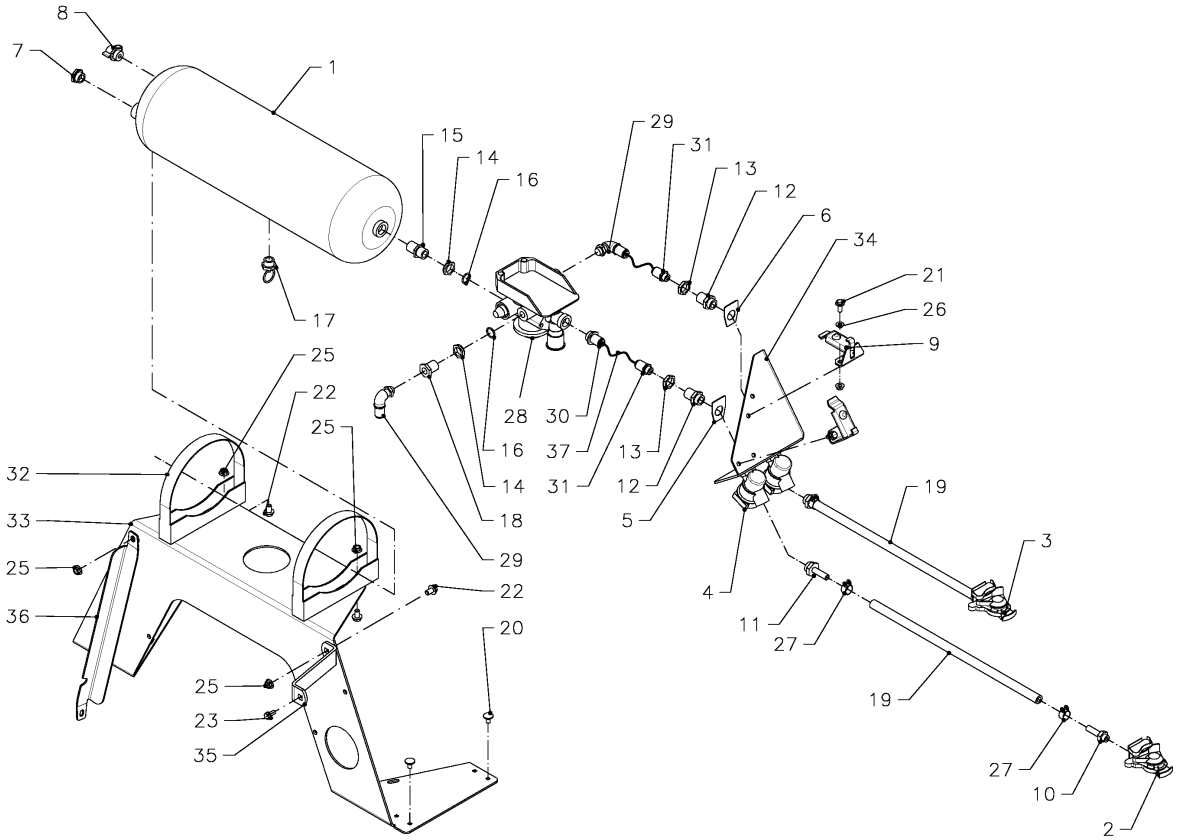

SPMVG000217

6490 / VALVE UNIT, AIR

PosNo.	Part No.	Qty.	Description	Remark
1	VF16619998	1	AIR TANK	
2	VR38222301	1	COUPLING	
3	VR38222302	1	CONNECTOR	
4	VR38222304	2	FILTER	
5	VR38222309	1	PLATE	
6	VR38222310	1	PLATE	
7	VR38222324	3	COVEHOOD	
8	VR38222331	1	CONNECTOR	
9	VR38222333	1	SUPPORT	
10	VGGP377	2	STUD, HOSE	
11	VGGP379	2	STUD, HOSE	
12	VGGP380	2	COUPLING	
13	VGGP381	2	NUT	
14	VGGP385	2	NUT	
15	VGGP386	1	COUPLING	
16	VGGP387	3	O-RING	
17	VGGP388	1	VALVE	
18	VGGP493	1	STUD, REDUCING	
19	VGGP590	1	HOSE	GIVE LENGTH WHEN ORDERING
20	KG00637261	4	CARRIAGE BOLT M6X25 8.8	
21	KG00981261	4	FLANGED BOLT M8X20 90	
22	KG00981761	6	FLANGED BOLT M10X16 90	
23	KG01000861	1	FLANGED BOLT M8X25	
24	KG01061261	4	LOCK NUT M8 8	
25	KG01061361	6	LOCK NUT M10 8	
26	VGND3146V	4	RING	
27	VGND9419	4	CLAMP, WORM DRIVE	
28	VRR0535801	1	VALVE UNIT, PNEUM.	
29	VRR0546101	2	COUPLING	
30	VRR0546201	1	COUPLING	
31	VRR0546501	2	COUPLING	
32	VGWP00118	2	CLAMP	
33	VGWP119K0	1	SUPPORT	
34	VGWP121K0	1	SUPPORT	
35	VGWP124K0	1	STRIP	
36	VGWP125K0	1	SUPPORT	
37	VGGP588	1	HOSE	GIVE LENGTH WHEN ORDERING

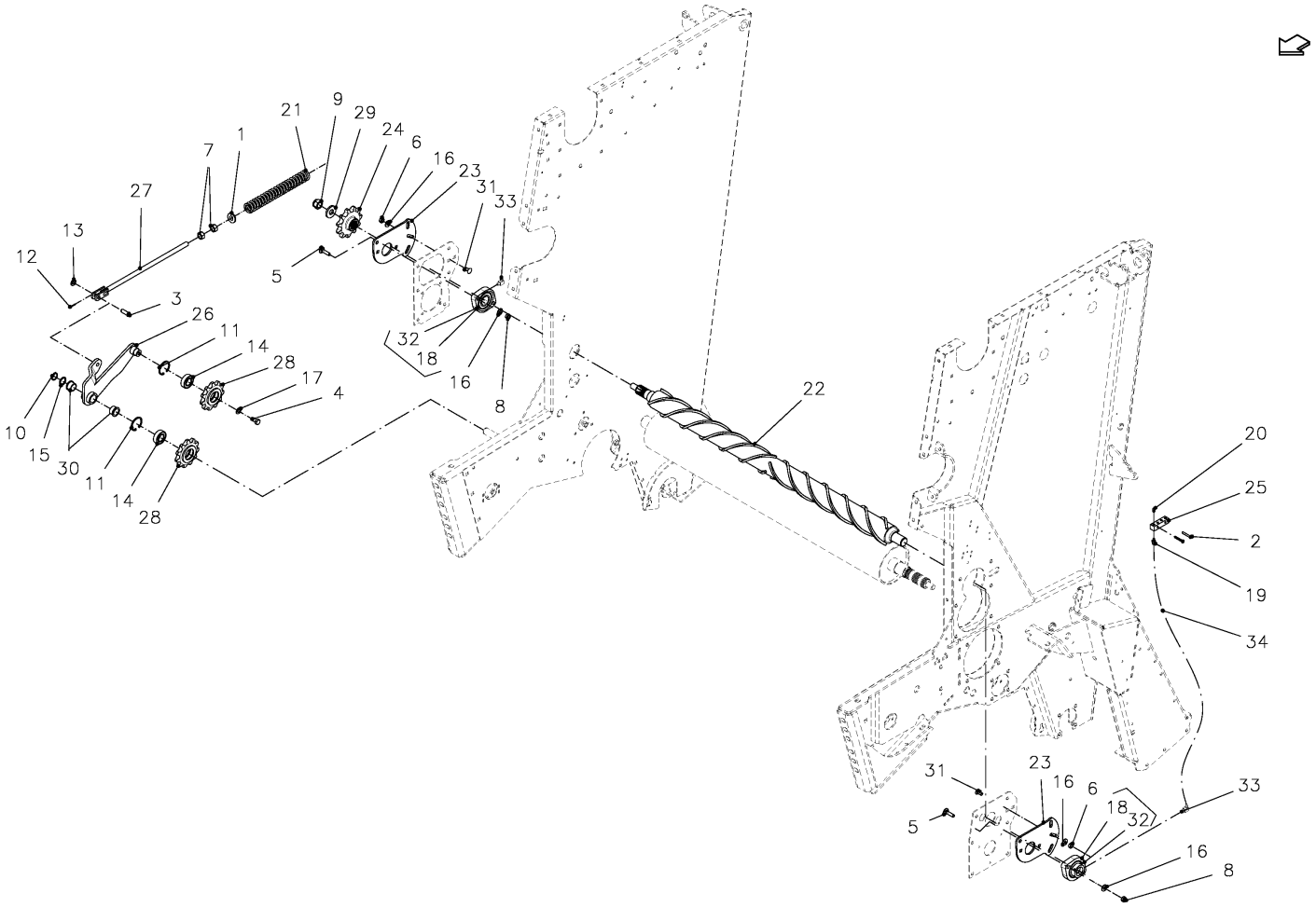

SPMVG000868

6490 / CHOPPING ROLLER

PosNo.	Part No.	Qty.	Description	Remark
1	VF16653934	1	WASHER	
2	VR30392640	4	TAPTITE BOUT	
3	VGBP505V	1	PIN	
4	KG00476261	1	HEX. SCREW M12X20 8.8	
5	KG00641761	4	CARRIAGE BOLT M10X40 8.8	
6	KG01052061	2	HEX. NUT M10 8	
7	KG01052361	2	HEX. NUT M16 8	
8	KG01068861	4	LOCK NUT M10 10	
9	KG01069261	1	NUT, LOCK	
10	KG01108362	1	CIRCLIP-A 25 X 1.2	
11	KG01129000	2	CIRCLIP-B 52 X 2	
12	KG01249861	1	SPLIT PIN 3.2X25 ST	
13	KG01267561	1	WASHER M12	
14	KG01378900	2	BALL BEARING 6205-2RS	
15	VGMT0062	1	SHIM SET	
16	VGND3147V	6	RING	
17	VGND3148V	1	CIRCLIP	
18	VGND5286	2	CUSHION, ADJUSTABLE	
19	VGND92174	2	STUD COUPLING, MALE	
20	VGND98026V	2	GREASE NIPPLE	
21	VGPZ451K0	1	SPRING, COMPRESSION	
22	VGRL0887K0	1	ROLLER	
23	VGRL821K0	2	PLATE	
24	VGRL849	1	SPROCKET Z=11	
25	VGRL862V	2	PIECE, CONNECTING	
26	VGWA02089K0	1	SUPPORT	
27	VGWA02092V	1	TENSIONNER	
28	VGWA2086	2	SPROCKET	
29	VGWA491V	1	RING	
30	VGWA707	2	SLEEVE, CUSHION	
31	VGXD296V	2	CARRIAGE BOLT	
32	VGND5287	2	BEARING	
33	VGND92212	2	STUD COUPLING, ELBOW	
34	VGND92176	2	HOSE, HP	GIVE LENGTH WHEN ORDERING

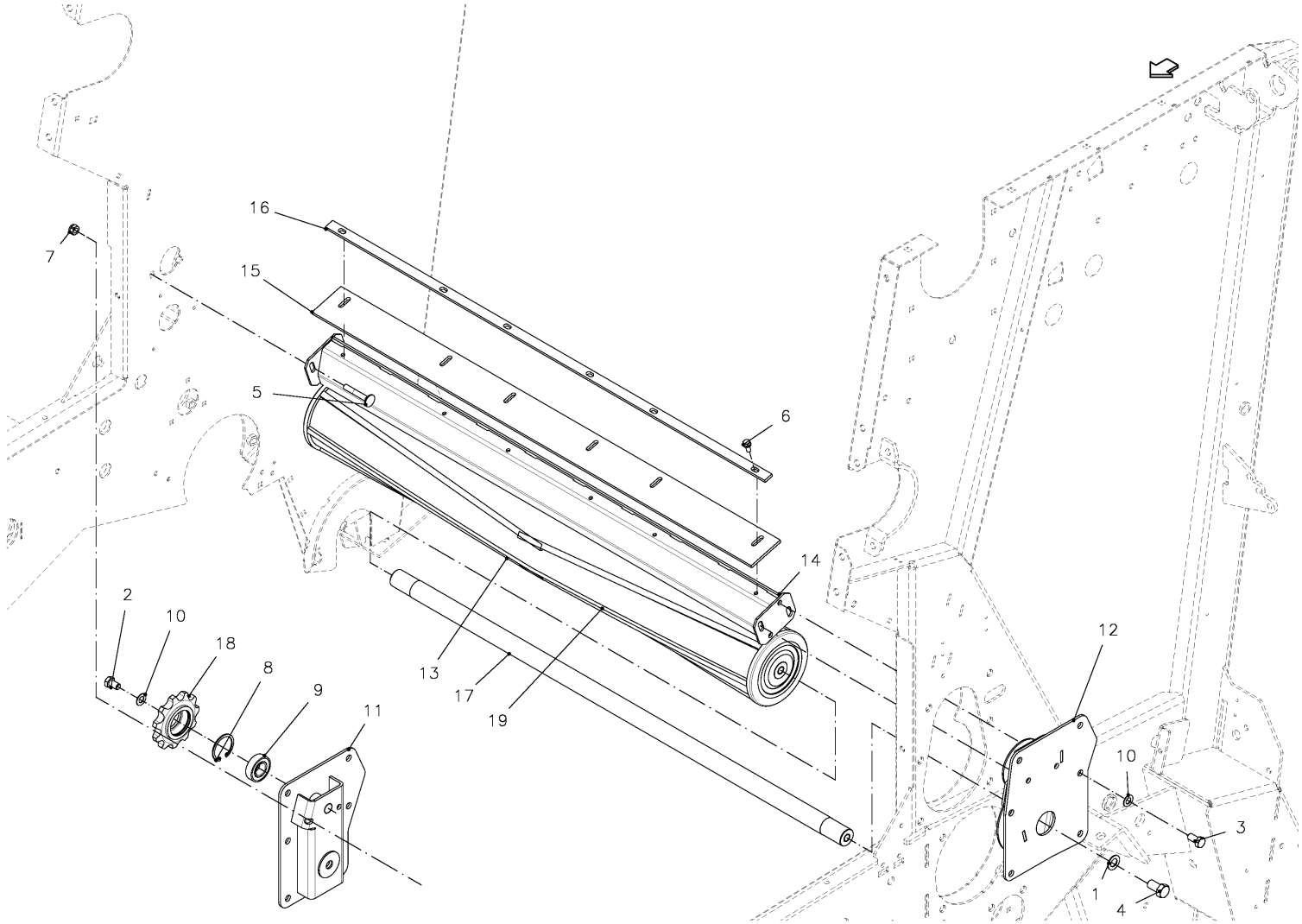

SPMVG000875

6490 / CHOPPING ROLLER

PosNo.	Part No.	Qty.	Description	Remark
1	VG37129064V	2	WASHER, BELLEVILLE	
2	KG00476261	1	HEX. SCREW M12X20 8.8	
3	KG00476461	12	HEX. SCREW M12X25 8.8	
4	KG00480061	2	HEX. SCREW M16X30 8.8	
5	KG00642261	4	CARRIAGE BOLT M10X65 8.8	
6	KG01000861	6	FLANGED BOLT M8X25	
7	KG01068861	4	LOCK NUT M10 10	
8	KG01129000	1	CIRCLIP-B 52 X 2	
9	KG01378900	1	BALL BEARING 6205-2RS	
10	VGND3148V	12	CIRCLIP	
11	VGRL0560K0	1	SUPPORT, RH	
12	VGRL0850K0	1	SUPPORT, LH	
13	VGWA002023	1	ROLLER ASSY,	
14	VGWA01486	1	SCRAPER	
15	VGWA2000	1	PLATE, RUBBER	
16	VGWA2001	1	STRIP	
17	VGWA2025	1	AXLE	
18	VGWA2086	1	SPROCKET	
19	VGRL00629	1	REPAIR SET, ROLLERS	

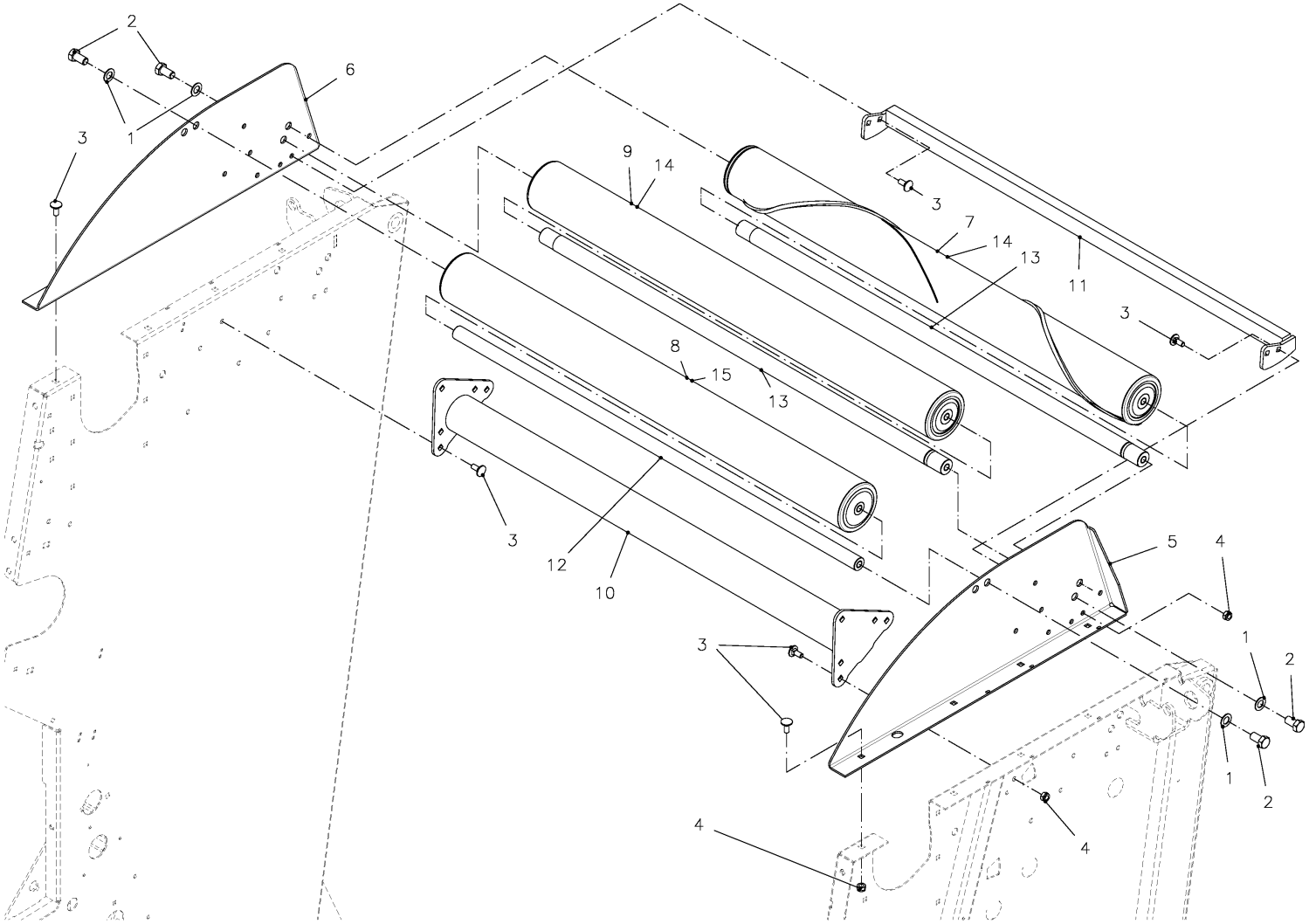

SPMVG000877

6490 / ROLLERS, TOP

PosNo.	Part No.	Qty.	Description	Remark
1	VG37129064V	4	WASHER, BELLEVILLE	
2	KG00480061	4	HEX. SCREW M16X30 8.8	
3	KG00641461	18	CARRIAGE BOLT M10X25 8.8	
4	KG01068861	18	LOCK NUT M10 10	
5	VGRL0449K0	1	PLATE, LH	
6	VGRL0450K0	1	PLATE, RH	
7	VGWA001418	1	ROLLER	SILAGE EXEC.
8	VGWA0043	1	ROLLER LONG	
9	VGWA00633	1	ROLLER ASSY, LONG	
10	VGWA077	1	PIPE, TORSION	
11	VGWA0920	1	SCRAPER	SILAGE EXEC.
12	VGWA44	1	AXLE	
13	VGWA633	2	AXLE	
14	VGBR00344		REPAIR SET, ROLLERS	
15	VGWA00368		REPAIR SET, ROLLERS	

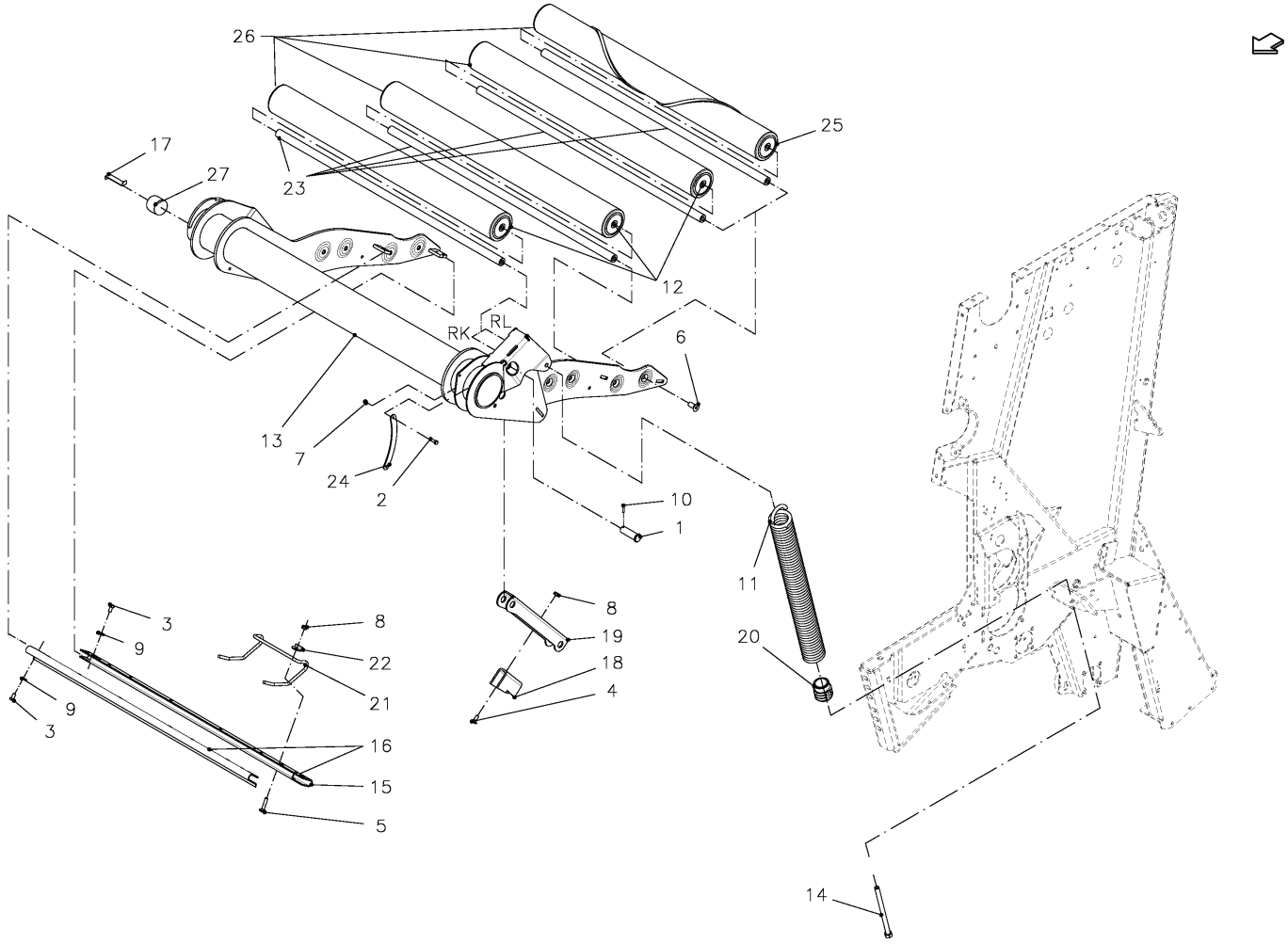

SPMVG000878

6490 / ROLLERS

PosNo.	Part No.	Qty.	Description	Remark
1	VGEU40V	1	PIN	
2	KG00472161	1	HEX. SCREW M8X25 8.8	
3	KG00474061	4	HEX. SCREW M10X20 8.8	
4	KG00641461	1	CARRIAGE BOLT M10X25 8.8	
5	KG00641961	4	CARRIAGE BOLT M10X50 8.8	
6	KG00865161	6	COUNTERSUNK HEAD SCREW M16X35 8.8	
7	KG01068761	1	LOCK NUT M8 10	
8	KG01068861	5	LOCK NUT M10 10	
9	VGND3147V	4	RING	
10	VGND4030V	1	PIN, TENSION	
11	VGPZ465	1	SPRING, TENSION	
12	VGRL00613K0	3	ROLLER	
13	VGWA01325	1	TENSIONER, BELT	
14	VGWA01374V	1	BOLT, SCREW	
15	VGWA01800	1	SCRAPER	SILAGE EXEC.
16	VGWA02028	2	SCRAPER	
17	VGWA1072	2	HOLDER	
18	VGWA1327	1	SUPPORT	
19	VGWA1328	1	LEVER	
20	VGWA1389V	1	HOLDER, SPRING	
21	VGWA1589	2	GUIDE	
22	VGWA2018V	4	BRACKET, CLAMP	
23	VGWA4	4	AXLE	
24	VGWA492V	1	STRIP	
25	VGWS0077	1	ROLLER	SILAGE EXEC.
26	VGWA00368	1	REPAIR SET, ROLLERS	
27	VGWA767	2	PROTECTION	

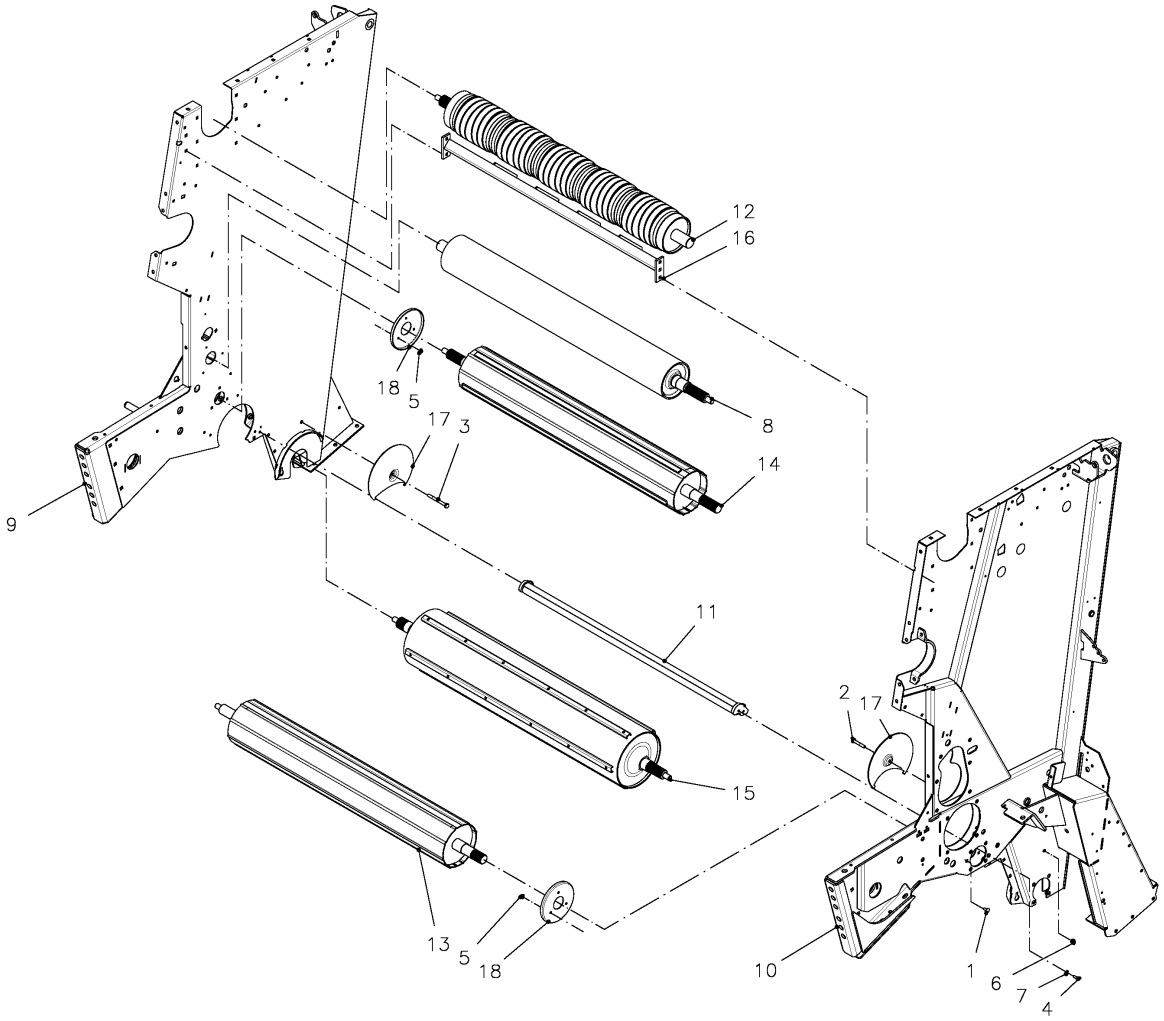

SPMVG000880

6490 / ROLLERS

PosNo.	Part No.	Qty.	Description	Remark
1	VGGM152V	6	CARRIAGE BOLT	
2	KG00355661	1	HEX. BOLT M10X60 8.8	
3	KG00356361	1	HEX. BOLT M10X100 8.8	
4	KG00545061	4	CHEESE HEAD SCREW M8X20 8.8	
5	KG01061261	6	LOCK NUT M8 8	
6	KG01068861	2	LOCK NUT M10 10	
7	KG01281661	4	SPRING WASHER M8	
8	VGRL0603K0	1	ROLLER	
9	VGRL0844K0	1	PLATE, SIDE, RH	
10	VGRL0845K0	1	PLATE, SIDE, LH	
11	VGWA01595	1	PLATE, GUIDE	WPU
12	VGWA02050	1	ROLLER WITH RUBBER	
13	VGWA02063K0	1	ROLLER	
14	VGWA02067K0	1	ROLLER	
15	VGWA02077K0	1	STARTER ROLLER	
16	VGWA0258	1	GUIDE, BELT	
17	VGWA234	2	DISC, RESTRICTOR	
18	VGWA451	2	PLATE, FILLER	

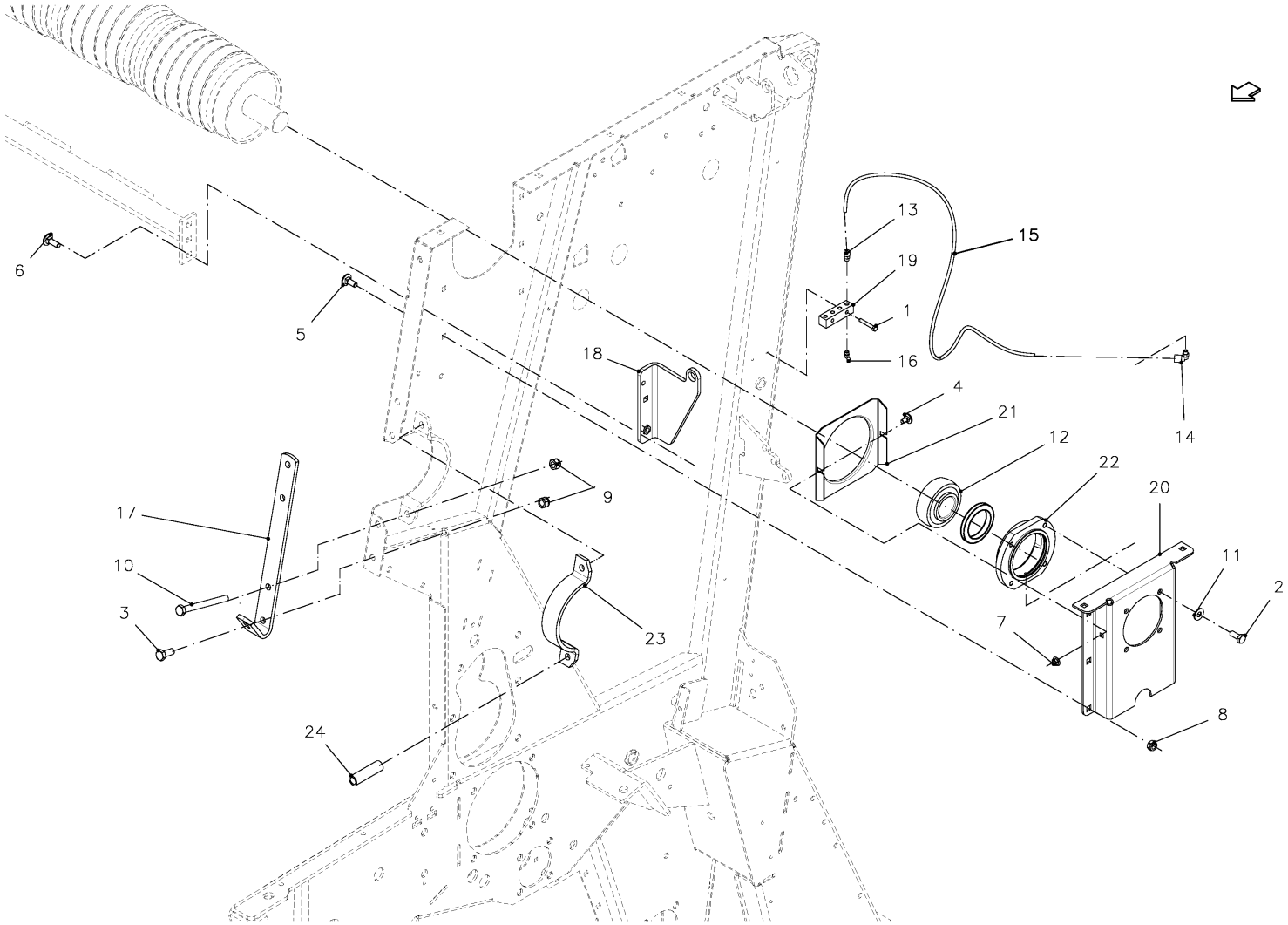

SPMVG000881

6490 / ROLLERS

PosNo.	Part No.	Qty.	Description	Remark
1	VR30392640	4	TAPTITE BOUT	
2	KG00474261	2	HEX. SCREW M10X25 8.8	
3	KG00476561	5	HEX. SCREW M12X30 8.8	
4	KG00638961	1	CARRIAGE BOLT M8X16 8.8	
5	KG00641461	1	CARRIAGE BOLT M10X25 8.8	
6	KG00641561	2	CARRIAGE BOLT M10X30 8.8	
7	KG01061261	1	LOCK NUT M8 8	
8	KG01068861	8	LOCK NUT M10 10	
9	KG01068961	4	LOCK NUT M12 10	
10	KG01840161	2	BOLT, SCREW	
11	VGND3147V	4	RING	
12	VGND5277	1	CUSHION, BALL, ADJUSTABLE	
13	VGND92174	2	STUD COUPLING, MALE	
14	VGND92175	2	ELBOW COUPLING	
15	VGND92176	2	HOSE, HP	GIVE LENGTH WHEN ORDERING
16	VGND98026V	2	GREASE NIPPLE	
17	VGRL287K0	1	STRIP	
18	VGRL347K0	1	SUPPORT, LH	
19	VGRL862V	2	PIECE, CONNECTING	
20	VGWA02054K0	1	SUPPORT	
21	VGWA1363V	1	PLATE, FILLER	
22	VGWA2055	1	HOUSING, CUSHION	
23	VGWA498	1	BRACE	
24	VGWA699V	2	PIPE	

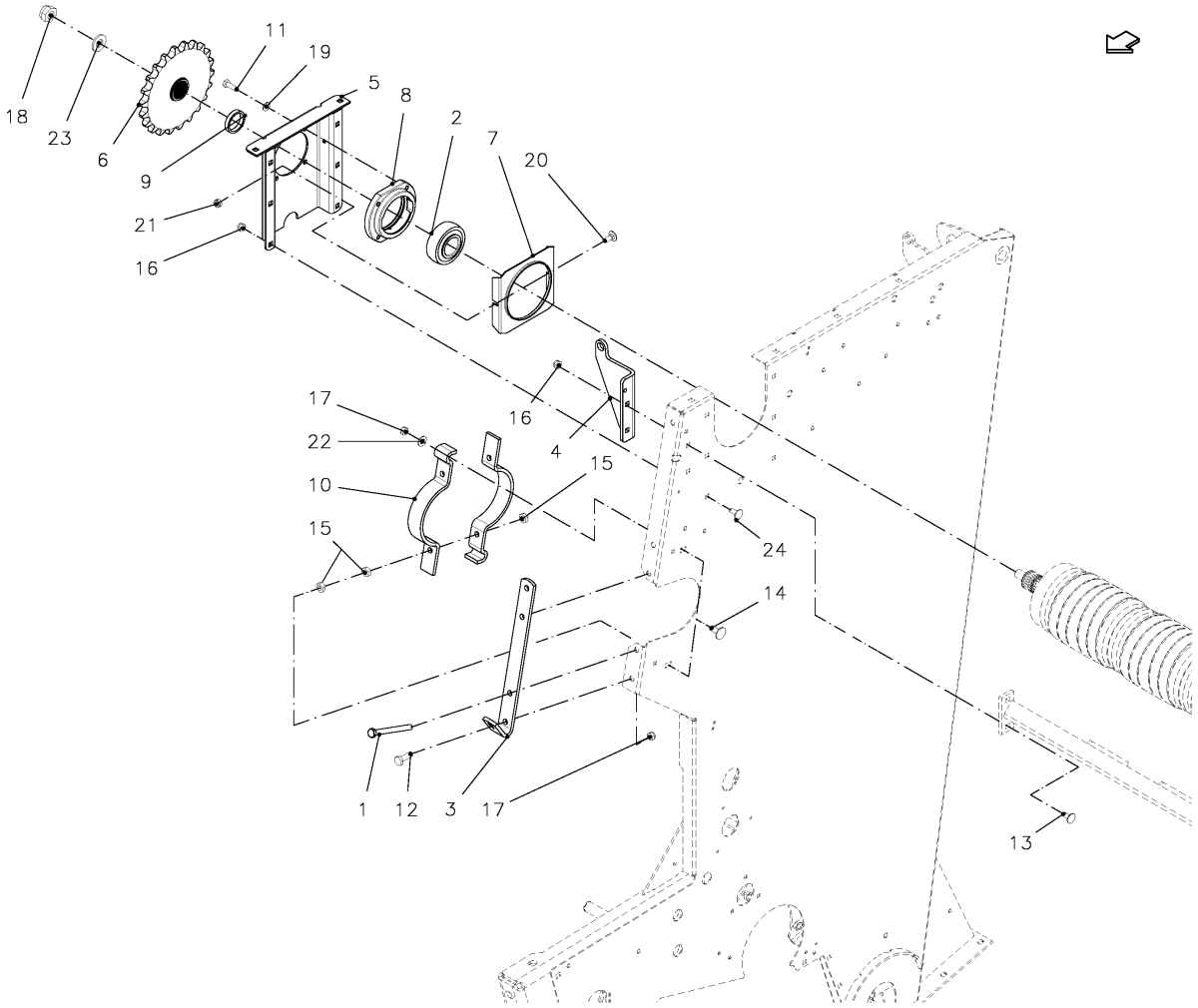

SPMVG000463

6490 / ROLLERS

PosNo.	Part No.	Qty.	Description	Remark
1	KG01840161	2	BOLT, SCREW	
2	VGND5277	1	CUSHION, BALL, ADJUSTABLE	
3	VGRL287K0	1	STRIP	
4	VGRL346K0	1	SUPPORT, RH	
5	VGWA02054K0	1	SUPPORT	
6	VGWA02057	1	SPROCKET	
7	VGWA1363V	1	PLATE, FILLER	
8	VGWA2055	1	HOUSING, CUSHION	
9	VGWA2069V	1	SLEEVE, SPACING	
10	VGWA366	2	BRACE	
11	KG00474261	4	HEX. SCREW M10X25 8.8	
12	KG00476561	2	HEX. SCREW M12X30 8.8	
13	KG00641561	2	CARRIAGE BOLT M10X30 8.8	
14	KG00641961	2	CARRIAGE BOLT M10X50 8.8	
15	KG01052161	6	HEX. NUT M12 8	
16	KG01068861	8	LOCK NUT M10 10	
17	KG01068961	4	LOCK NUT M12 10	
18	KG01069261	1	NUT, LOCK	
19	VGND3147V	8	RING	
20	KG00638961	2	CARRIAGE BOLT M8X16 8.8	
21	KG01061261	2	LOCK NUT M8 8	
22	VGTH100V	2	RING	
23	VGWA491V	1	RING	
24	KG00641461	6	CARRIAGE BOLT M10X25 8.8	

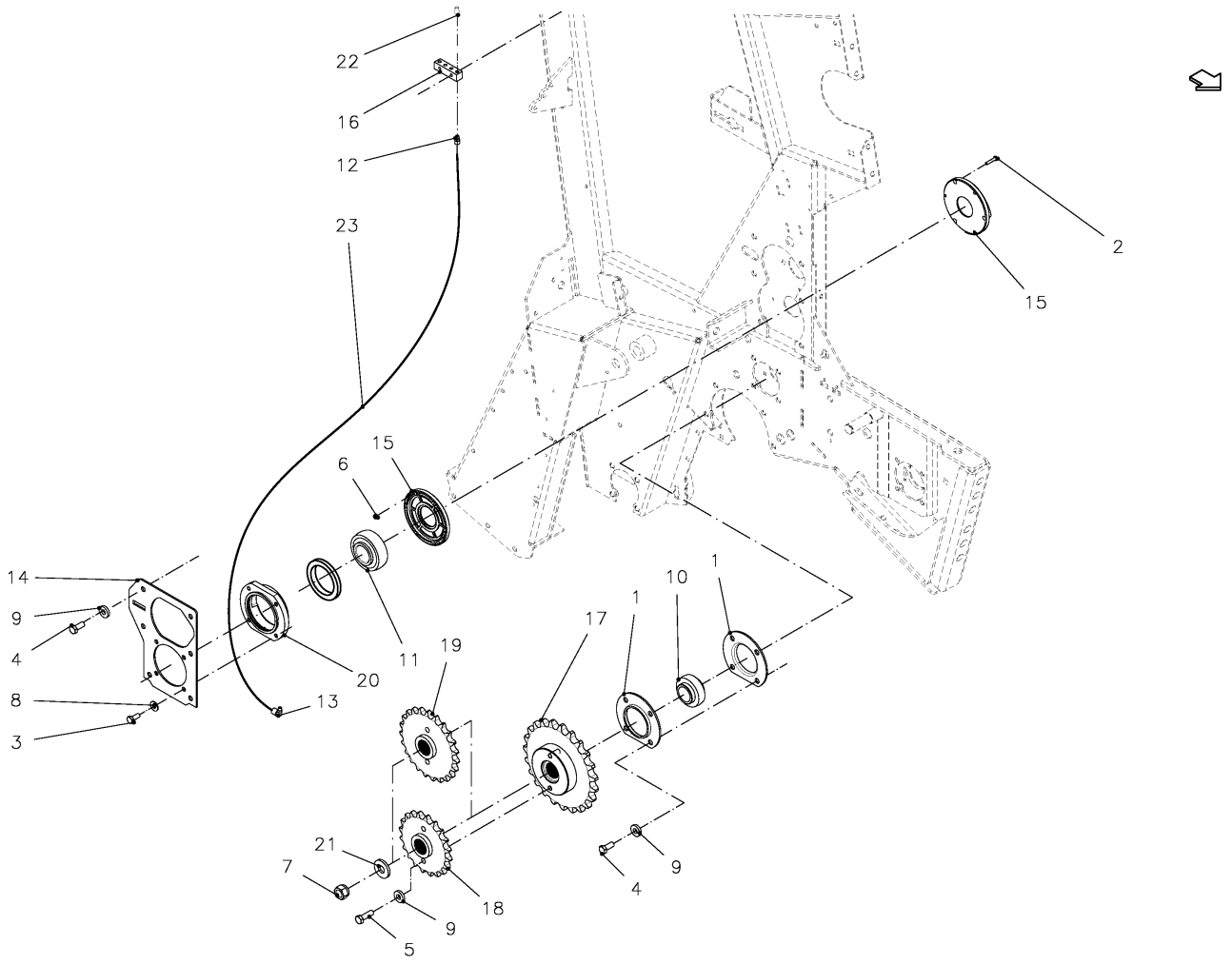

SPMVG000883

6490 / DRIVE, CHAIN-

PosNo.	Part No.	Qty.	Description	Remark
1	VG18940610V	2	HOUSING, FLANGED	
2	KG00350861	3	HEX. BOLT M6X30 8.8	
3	KG00474261	4	HEX. SCREW M10X25 8.8	
4	KG00476561	10	HEX. SCREW M12X30 8.8	
5	KG00476761	2	HEX. SCREW M12X40 8.8	
6	KG01067361	3	LOCK NUT M6 8	
7	KG01069261	1	NUT, LOCK	
8	VGND3147V	4	RING	
9	VGND3148V	12	CIRCLIP	
10	VGND5022	1	CUSHION, BALL, SPEC.	
11	VGND5277	1	CUSHION, BALL, ADJUSTABLE	
12	VGND92174	1	STUD COUPLING, MALE	
13	VGND92175	1	ELBOW COUPLING	
14	VGRL486K0	1	PLATE	
15	VGRL494	2	SEAL	
16	VGRL862V	1	PIECE, CONNECTING	
17	VGWA02019	1	SPROCKET	
18	VGWA02073	1	SPROCKET	WPU
19	VGWA02084	1	SPROCKET	R + XL-R + 14-OC +23-OC
20	VGWA2055	1	HOUSING, CUSHION	
21	VGWA491V	1	RING	
22	VGND98026V	1	GREASE NIPPLE	
23	VGND92176	1	HOSE, HP	GIVE WHEN LENGTH WHEN ORDERING

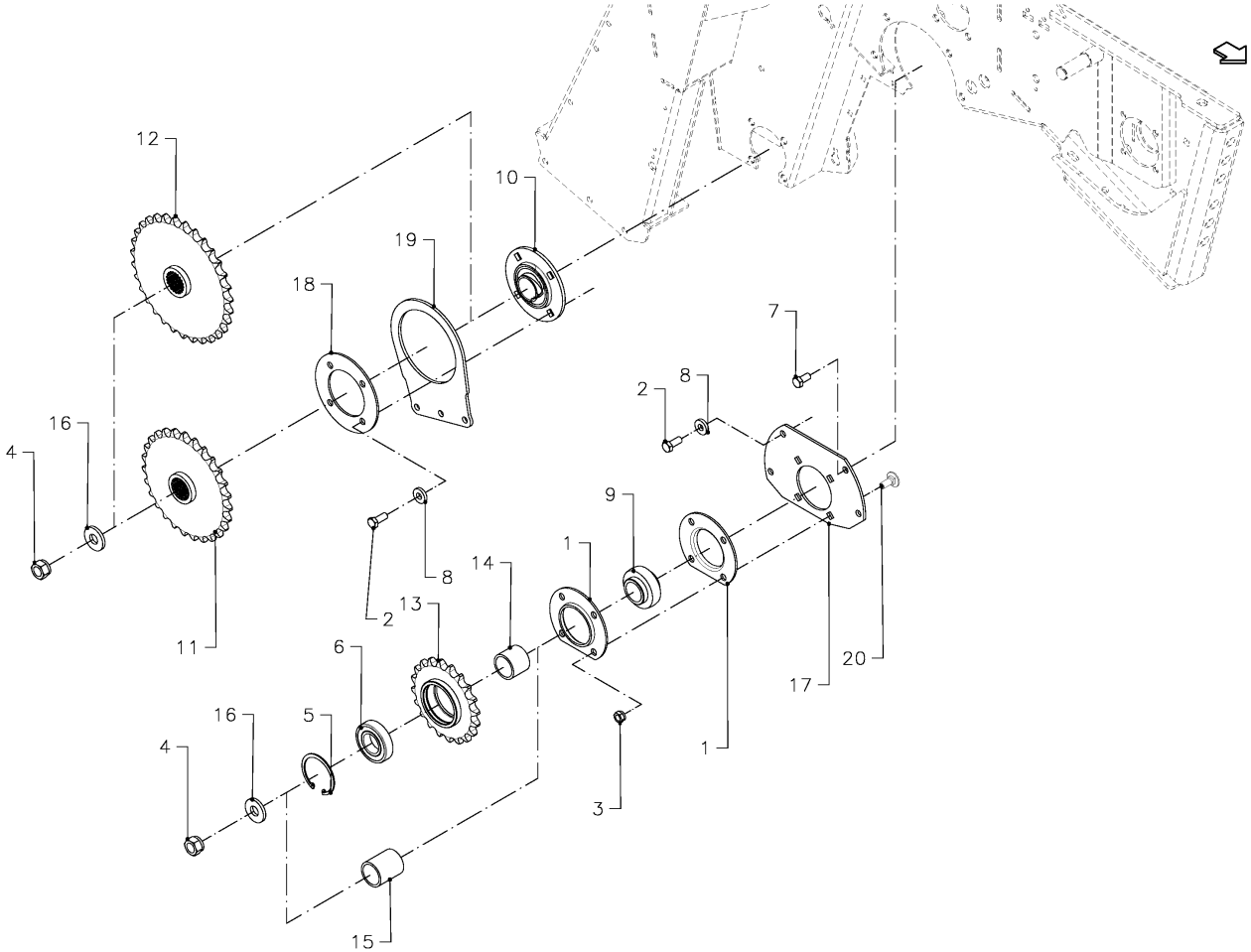

SPMVG000159

6490 / DRIVE, CHAIN-

PosNo.	Part No.	Qty.	Description	Remark
1	VG18940610V	2	HOUSING, FLANGED	
2	KG00476561	7	HEX. SCREW M12X30 8.8	
3	KG01068961	4	LOCK NUT M12 10	
4	KG01069261	2	NUT, LOCK	
5	KG01130900	1	CIRCLIP-B 80 X 2.5	WPU
6	KG01382000	1	BALL BEARING 6208-2RS	WPU
7	VGND1402V	1	BOLT, LOCK, SPEC.	
8	VGND3148V	7	CIRCLIP	
9	VGND5022	1	CUSHION, BALL, SPEC.	
10	VGND5238	1	CUSHION, BALL, ADJUSTABLE	
11	VGWA02065	1	SPROCKET	WPU
12	VGWA02085	1	SPROCKET	R+ XL-R +14-OC +23-OC
13	VGWA083	1	SPROCKET	WPU
14	VGWA2064V	1	SLEEVE, SPACING	
15	VGWA2087V	1	SLEEVE, SPACING	R + XL-R +14-OC +23-OC
16	VGWA491V	2	RING	WPU
17	VGWA506	1	LID, RH	
18	VGXD296V	1	CARRIAGE BOLT	
19	VGWA900	1	PLATE	
20	VF01142791	4	TRUSS-HEAD SCREW	

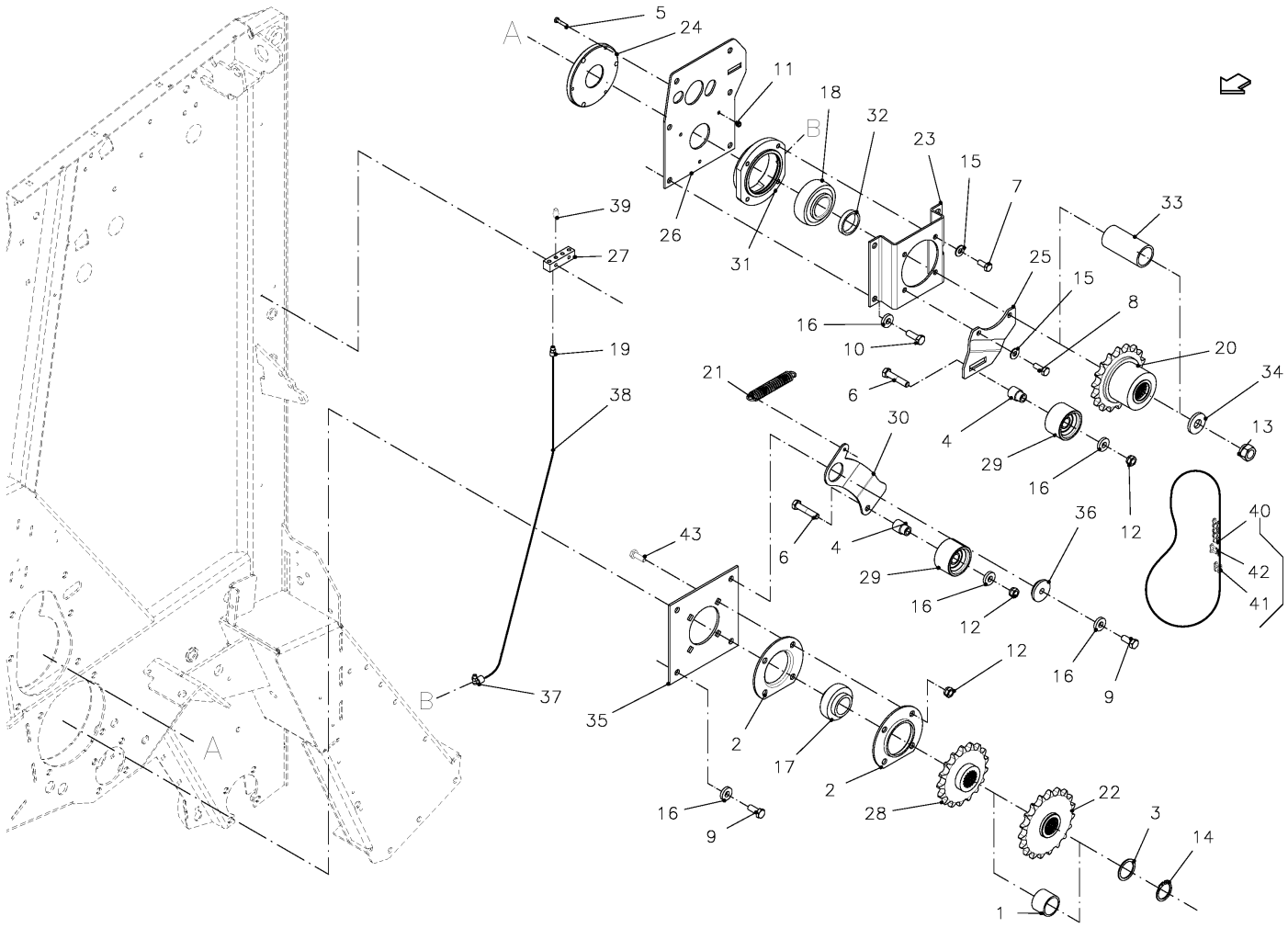
A
5
24
11
18
32
B
23
15
7
33
39
26
27
31
25
15
8
16
10
20
19
21
6
34
38
30
4
13
29
16
12
36
40
43
6
4
42
29
41
16
12
12
16
9
37
B
35
2
17
2
28
22
3
14
16
9
1
A
SPMVG000901

6490 / DRIVE, CHAIN-

PosNo.	Part No.	Qty.	Description	Remark
1	VG13929020V	1	SLEEVE, SPACING	STANDARD
2	VG18940610V	2	HOUSING, FLANGED	
3	VGAH00132	1	SHIM SET	
4	VGBR1086V	2	BUSH	
5	KG00350861	3	HEX. BOLT M6X30 8.8	
6	KG00357761	2	HEX. BOLT M12X60 8.8	
7	KG00474261	2	HEX. SCREW M10X25 8.8	
8	KG00474361	2	HEX. SCREW M10X30 8.8	
9	KG00476561	4	HEX. SCREW M12X30 8.8	
10	KG00476661	6	HEX. SCREW M12X35 8.8	
11	KG01067361	3	LOCK NUT M6 8	
12	KG01068961	6	LOCK NUT M12 10	
13	KG01069261	1	NUT, LOCK	
14	KG01099600	1	CIRCLIP-A 40 X 2.5	
15	VGND3147V	4	RING	
16	VGND3148V	10	CIRCLIP	
17	VGND5022	1	CUSHION, BALL, SPEC.	
18	VGND5277	1	CUSHION, BALL, ADJUSTABLE	
19	VGND92174	1	STUD COUPLING, MALE	
20	VGND94085	1	KEY-TYPE OVERRUNNING CLUTCH	EXTRA DRIVE
21	VGPZ302V	1	SPRING, TENSION	
22	VGRL0382	1	SPROCKET	EXTRA DRIVE
23	VGRL484K0	1	SUPPORT	
24	VGRL494	1	SEAL	
25	VGRL501K0	1	PLATE	
26	VGRL848K0	1	PLATE	
27	VGRL862V	1	PIECE, CONNECTING	
28	VGWA01576	1	SPROCKET	
29	VGWA02015	2	ROLLER, NYLON	
30	VGWA2008	1	TENSIONNER	
31	VGWA2055	1	HOUSING, CUSHION	
32	VGWA2069V	1	SLEEVE, SPACING	
33	VGWA2096V	1	SLEEVE, SPACING	STANDARD
34	VGWA491V	1	RING	
35	VGWA507	1	LID, LH	
36	VGWA528V	1	RING	
37	VGND92196	1	STUD COUPLING, MALE	
38	VGND92176	1	HOSE, HP	GIVE LENGTH WHEN ORDERING
39	VGND98026V	1	GREASE NIPPLE	
40	VGND96129	1	CHAIN, ROLLER, SIMPLEX	

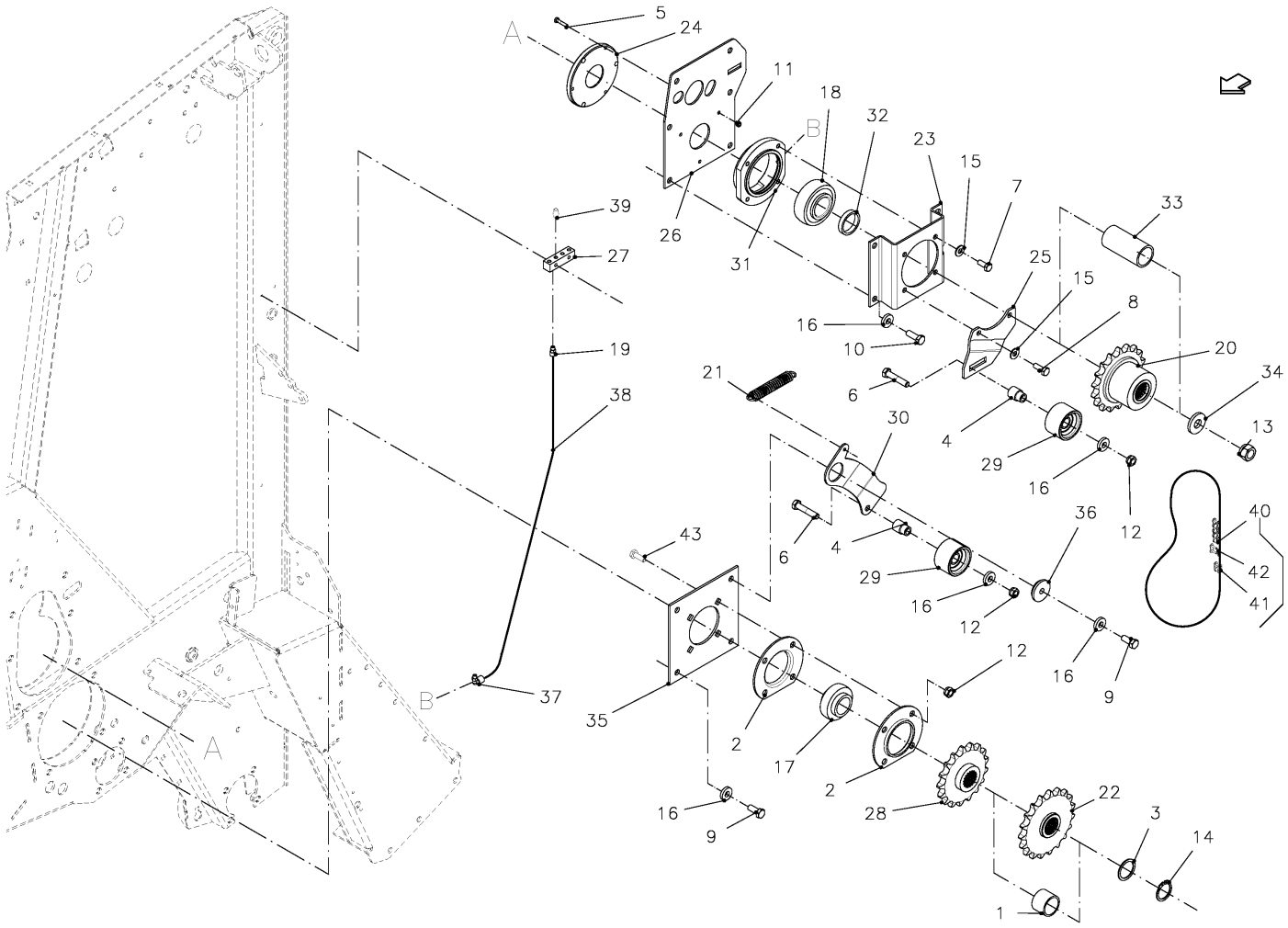
A
5
24
11
18
32
B
23
15
7
33
39
26
27
31
25
15
8
16
10
20
19
21
6
34
38
30
4
13
29
16
12
36
40
43
6
4
42
29
41
16
12
12
16
9
37
B
35
2
17
2
28
22
3
14
16
9
1
A
SPMVG000901

6490 / DRIVE, CHAIN-

PosNo.	Part No.	Qty.	Description	Remark
41	VGND96088	1	LINK, OFFSET	
42	VGND9295	1	LINK, SIMPL.	
43	VF01142791	1	TRUSS-HEAD SCREW	

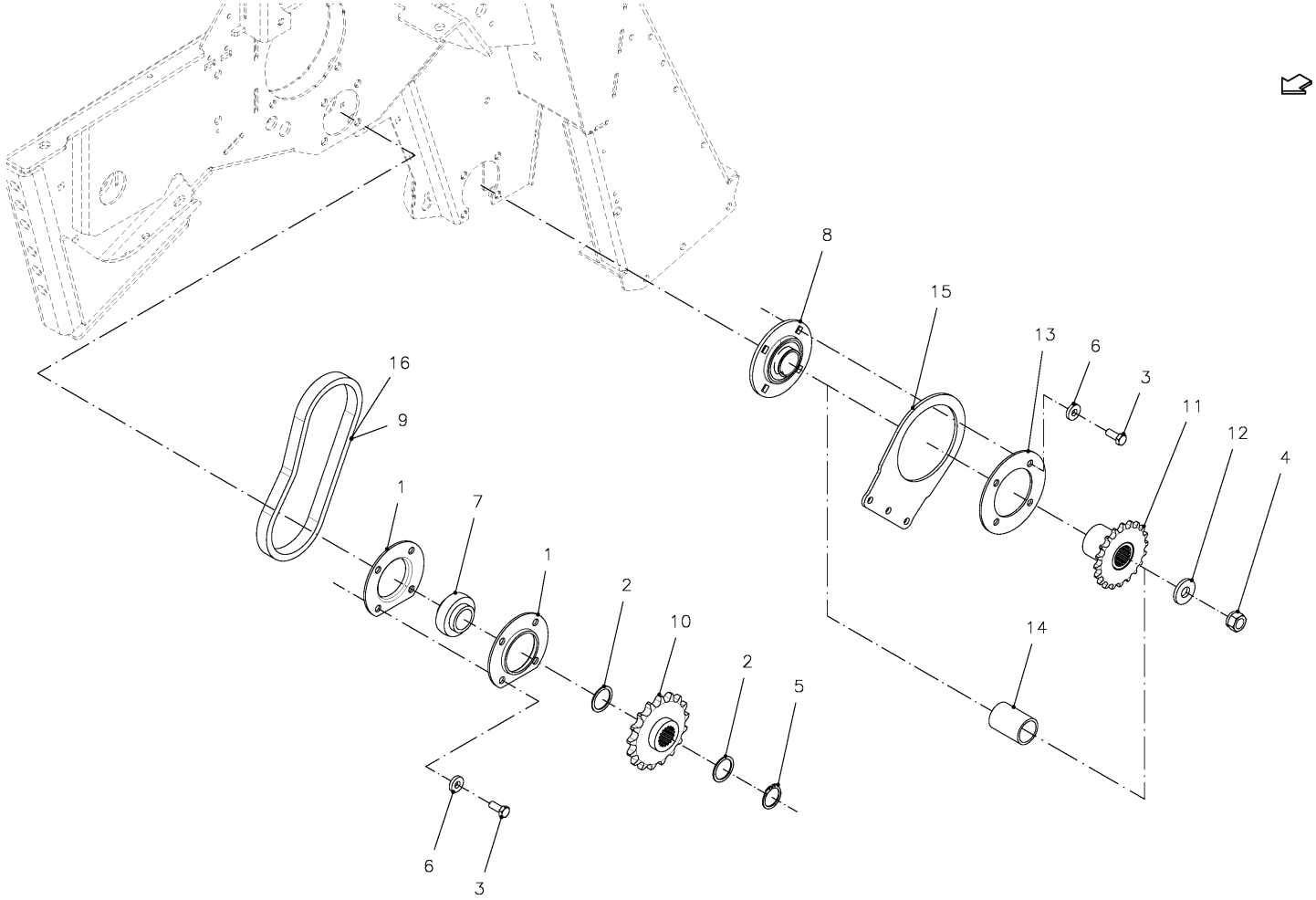

SPMVG000158

6490 / DRIVE, CHAIN-

PosNo.	Part No.	Qty.	Description	Remark
1	VG18940610V	2	HOUSING, FLANGED	
2	VGAH00132	2	SHIM SET	
3	KG00476561	8	HEX. SCREW M12X30 8.8	
4	KG01069261	1	NUT, LOCK	
5	KG01099600	1	CIRCLIP-A 40 X 2.5	
6	VGND3148V	8	CIRCLIP	
7	VGND5022	1	CUSHION, BALL, SPEC.	
8	VGND5238	1	CUSHION, BALL, ADJUSTABLE	
9	VGND96127	1	CHAIN, ROLLER, SIMPLEX	
10	VGWA01576	1	SPROCKET	
11	VGWA056	1	SPROCKET	WPU
12	VGWA491V	1	RING	
13	VGWA54V	1	RING	
14	VGWA552V	1	BUSH	R + XL-R + 14-OC + 23-OC
15	VGWA900	1	PLATE	
16	VGND9295	1	LINK, SIMPL.	

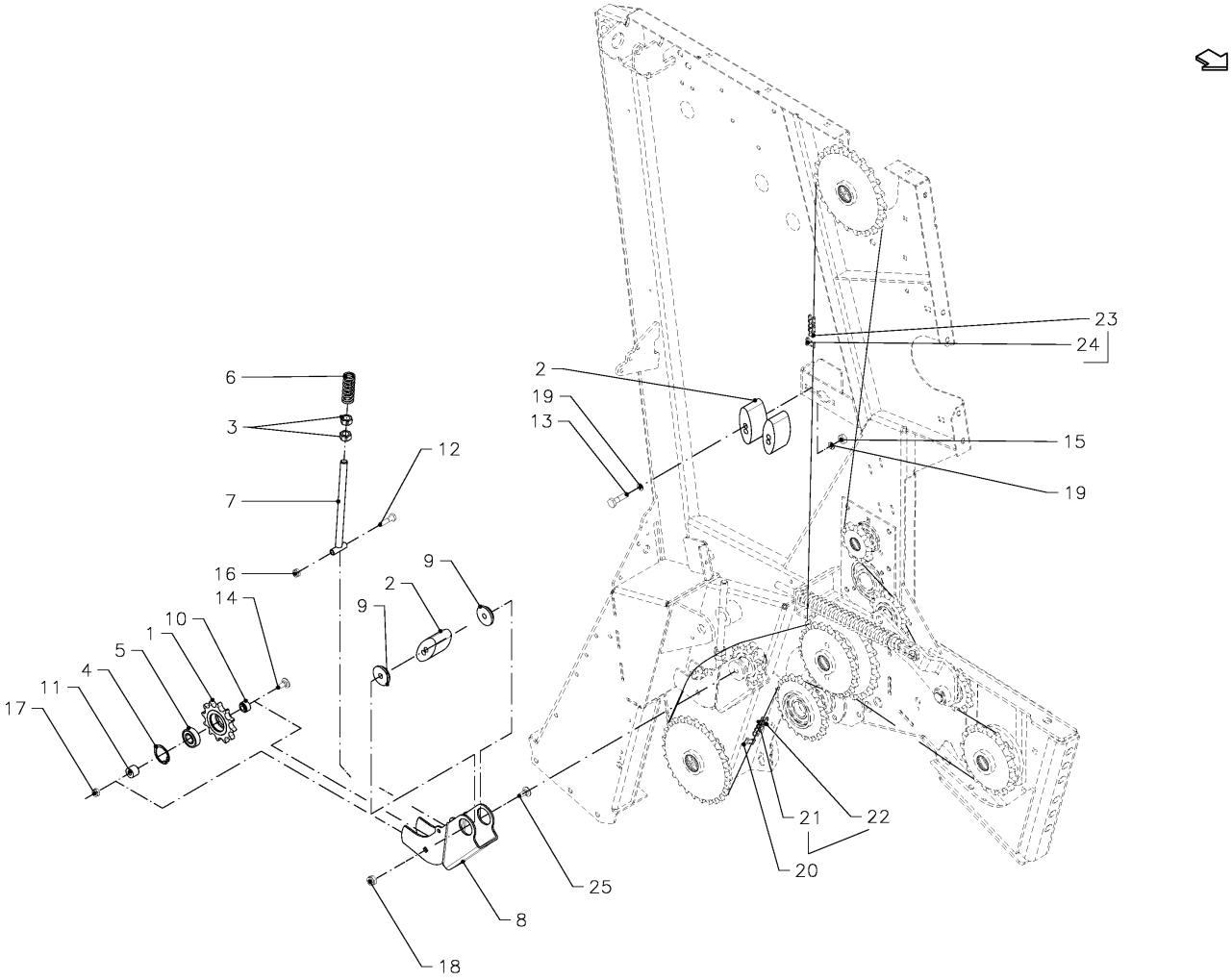

SPMVG000174

6490 / DRIVE, CHAIN-

PosNo.	Part No.	Qty.	Description	Remark
1	VG13378002	1	SPROCKET	
2	VGBV189	3	TENSIONER, CHAIN	
3	KG01052361	2	HEX. NUT M16 8	
4	KG01128700	1	CIRCLIP-B 47 X 1.75	
5	KG01377800	1	BALL BEARING 6204-2RS	
6	VGPZ19V	1	SPRING, COMPRESSION	
7	VGWA0601V	1	TENSIONNER	
8	VGWA527	1	SUPPORT	
9	VGWA528V	2	RING	
10	VGWA540V	1	BUSH	
11	VGWA541V	1	BUSH	
12	KG00353761	1	HEX. BOLT M8X65 8.8	
13	KG00358161	2	HEX. BOLT M12X80 8.8	
14	KG00642261	1	CARRIAGE BOLT M10X65 8.8	
15	KG01052161	2	HEX. NUT M12 8	
16	KG01068761	1	LOCK NUT M8 10	
17	KG01068861	1	LOCK NUT M10 10	
18	KG01068961	1	LOCK NUT M12 10	
19	VGND3148V	4	CIRCLIP	
20	VGND9295	2	LINK, SIMPL.	
21	VGND96104	1	CHAIN, ROLLER, SIMPLEX	R + XL- R +14-OC + 23-OC
22	VGND96105	1	CHAIN, ROLLER, SIMPLEX	WPU
23	VGND96130	1	CHAIN, ROLLER, SIMPLEX	
24	VF06213194	1	CHAIN LINK	
25	VGWA949V	1	CARRIAGE BOLT, SPEC.	

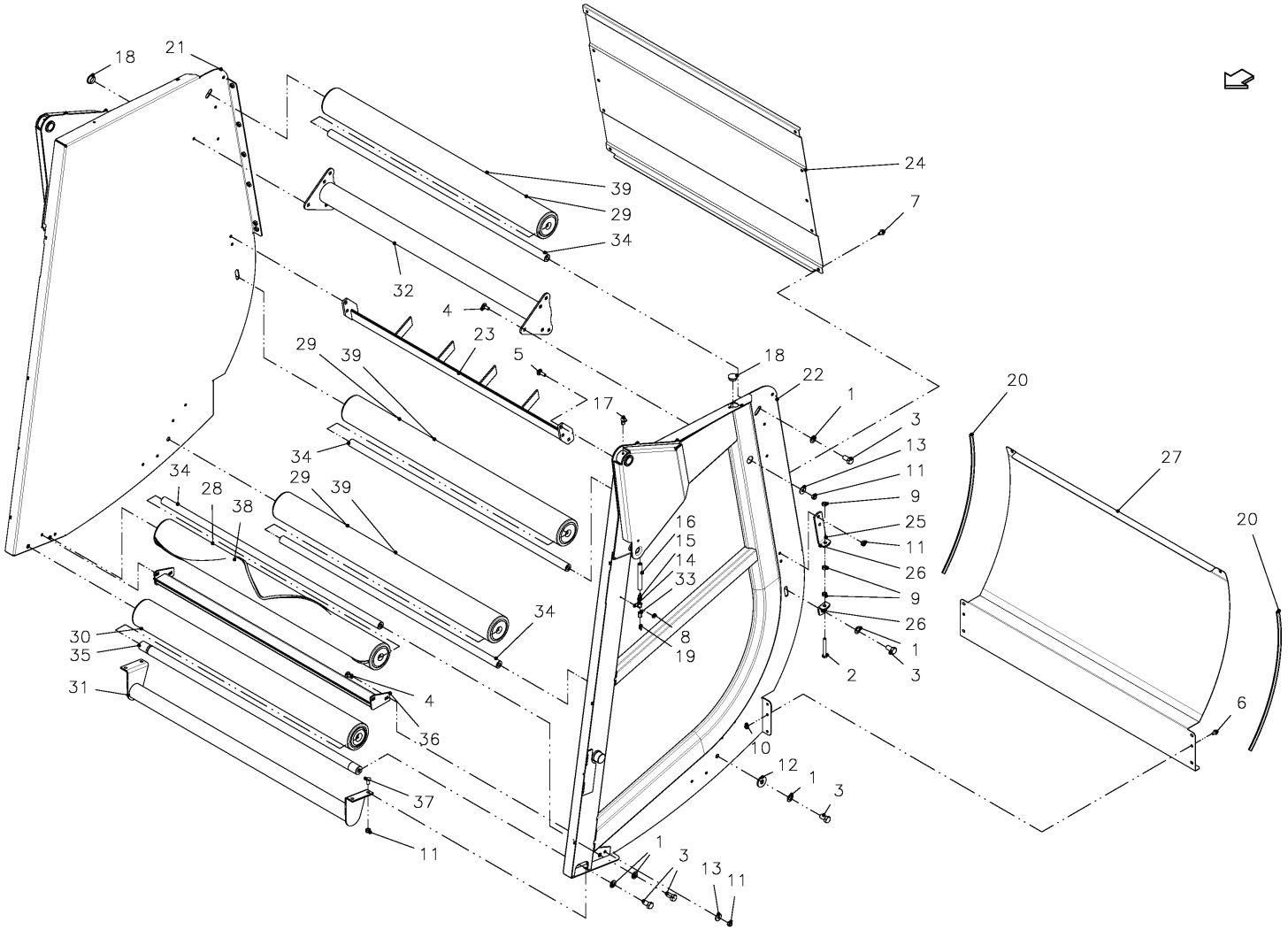

SPMVG000885

6490 / TAILGATE

PosNo.	Part No.	Qty.	Description	Remark
1	VG37129064V	5	WASHER, BELLEVILLE	
2	KG00475361	2	HEX. SCREW M10X80 8.8	
3	KG00480061	5	HEX. SCREW M16X30 8.8	
4	KG00641461	6	CARRIAGE BOLT M10X25 8.8	
5	KG00641561	1	CARRIAGE BOLT M10X30 8.8	
6	KG00981161	2	FLANGED BOLT M8X16 90	
7	KG00981761	18	FLANGED BOLT M10X16 90	
8	KG01000161	1	FLANGED BOLT M6X12	
9	KG01052061	6	HEX. NUT M10 8	
10	KG01061261	2	LOCK NUT M8 8	
11	KG01068861	14	LOCK NUT M10 10	
12	KG01273961	2	WASHER M16	
13	VGMT152V	6	RING	
14	VGND90033	1	CLAMP HOSE-	
15	VGND92174	1	STUD COUPLING, MALE	
16	VGND92176	2	HOSE, HP	GIVE LENGTH WHEN ORDERING
17	VGND92177	1	ELBOW COUPLING	
18	VGND95061	2	CAP, PLASTIC	
19	VGND98026V	1	GREASE NIPPLE	
20	VGND98132	2	PROFILE, RUBBER	GIVE LENGTH WHEN ORDERING
21	VGRL0348K0	1	TAILGATE, RH	
22	VGRL0349K0	1	TAILGATE, LH	
23	VGRL0525K0	1	GUIDE, BELT	
24	VGRL358K0	1	GUARD, PROTECT.	
25	VGRL522K0	1	SUPPORT	
26	VGRL523K0	1	SUPPORT	
27	VGRL526K0	1	GUARD, PROTECT.	
28	VGWA00373	1	ROLLER	
29	VGWA0043	3	ROLLER LONG	
30	VGWA00633	1	ROLLER ASSY, LONG	
31	VGWA0455	1	SUPPORT	
32	VGWA077	1	PIPE, TORSION	
33	VGWA1444V	1	NUT	
34	VGWA44	4	AXLE	
35	VGWA633	1	AXLE	
36	VGWG019	1	SCRAPER	AUTO PLUS
37	VGXD296V	1	CARRIAGE BOLT	
38	VGWA00368	1	REPAIR SET, ROLLERS	
39	VGBR00344	3	REPAIR SET, ROLLERS	

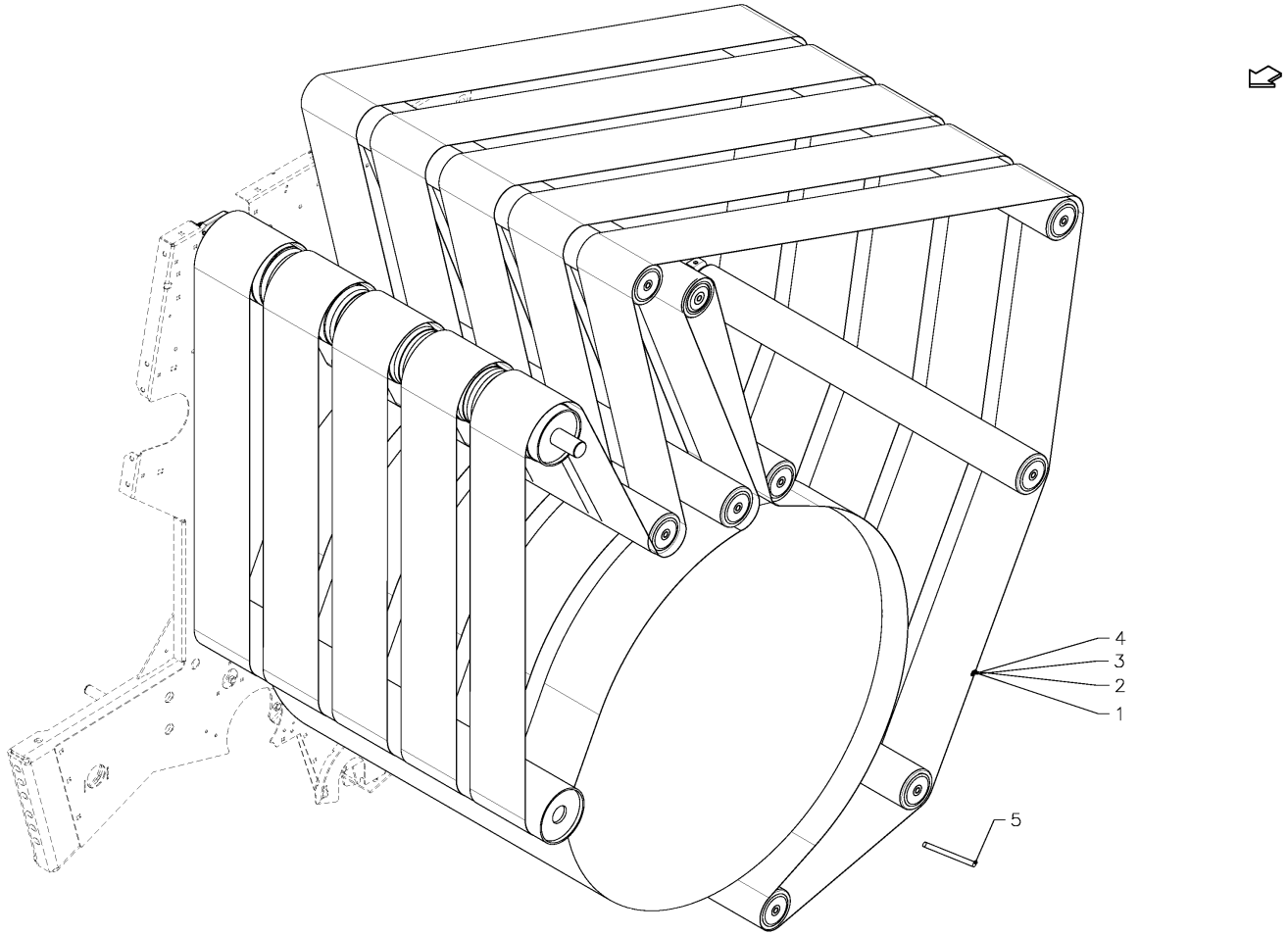

SPMVG000224

6490 / BELTS

PosNo.	Part No.	Qty.	Description	Remark
1	VGWA00999	1	BELTS SET ENDLESS	
2	VGWA1314	5	BELT	WPU
3	VGWA63	5	BELT	
4	VGWA998	5	BELT, ENDLESS	
5	VGWA158	1	PIN 3.5X200	GIVE QUANTITY WHEN ORDERING

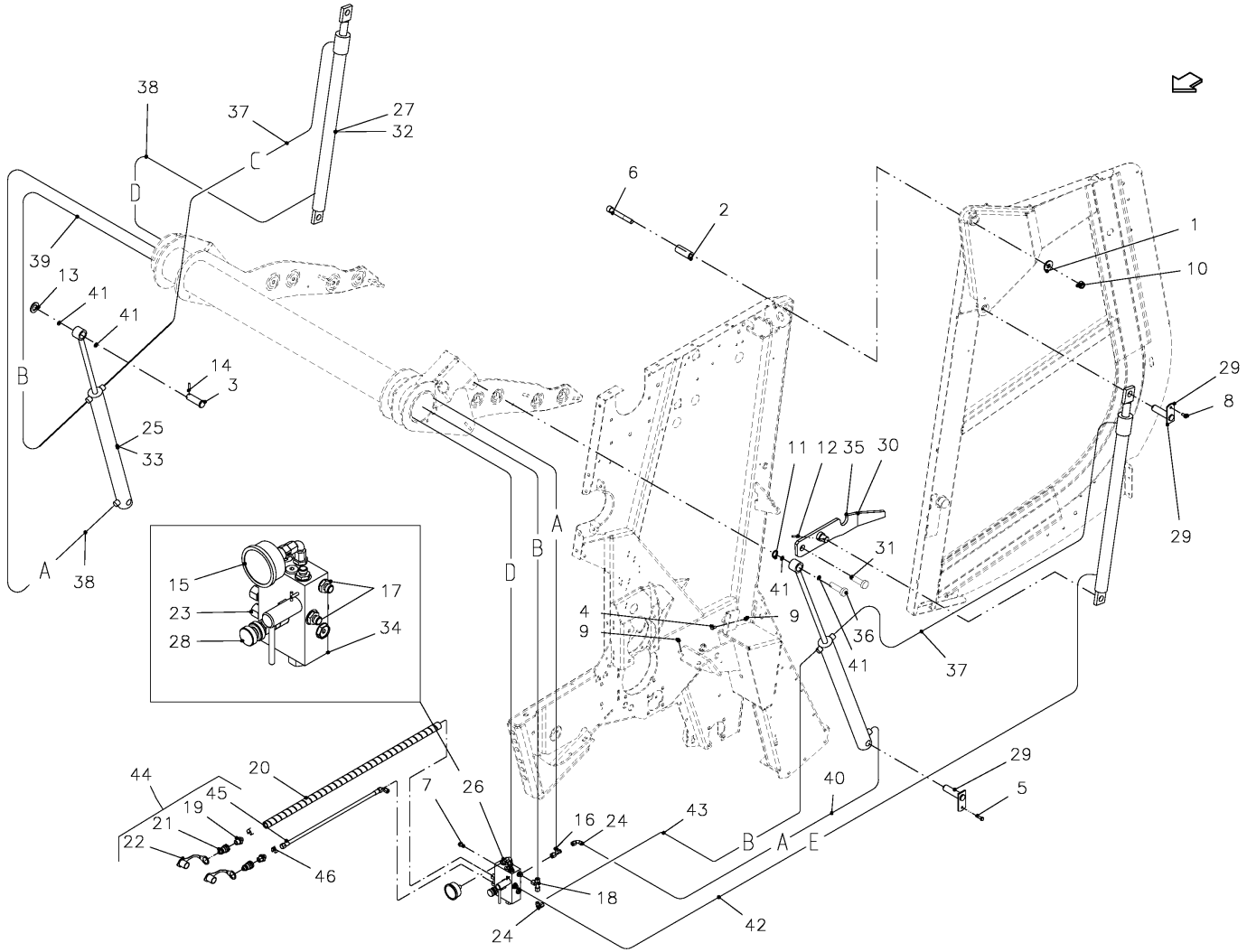
38
37
27
32
C
D
6
2
1
10
39
13
41
41
14
3
B
25
33
29
8
11 12 35 30
31
29
A
38
15
23
28
17
34
A
B
D
41
4
9
9
36
41
37
44
20
45
19
21
22
46
7
26
16 24
43
40
29
5
B
A
E
18
24
42
SPMVG000884

6490 / HYDRAULICS

PosNo.	Part No.	Qty.	Description	Remark
1	VG13925028V	2	RING	
2	VG13974003V	2	BUSH	
3	VGEU40V	1	PIN	
4	KG00471761	2	HEX. SCREW M8X16 8.8	
5	KG00472161	2	HEX. SCREW M8X25 8.8	
6	KG00555861	2	CHEESE HEAD SCREW M16X120 8.8	
7	KG00981061	2	FLANGED BOLT M8X12 90	
8	KG01000861	2	FLANGED BOLT M8X25	
9	KG01068761	3	LOCK NUT M8 10	
10	KG01069161	2	LOCK NUT M16 10	
11	KG01098562	1	CIRCLIP-A 25 X 2	
12	KG01189662	2	TENSION PIN 6X40	
13	KG01268161	1	WASHER M24	
14	VGND4030V	1	PIN, TENSION	
15	VGND92026	1	PRESSURE GAUGE	
16	VGND92032V	1	MALE STUD TEE STUD BARREL, ADJ	
17	VGND92104V	2	STUD COUPLING	
18	VGND92154V	1	T-COUPLING, ADJUSTABLE	
19	VGND9393V	2	ADAPTOR	
20	VGND95066		PROTECTION	GIVE LENGTH WHEN ORDERING
21	VGND9606	2	QUICK-DISCONNECT PLUG, MALE	
22	VGND9607	2	COVER, DUST	
23	VGND9808V	2	STUD COUPLING, MALE	
24	VGND9906V	2	ELBOW COUPLING, ADJUSTABLE	
25	VGWA001342	2	CYLINDER	
26	VGWA00252	1	BLOCK, HYDR.	
27	VGWA0051	1	CYLINDER ASSY, HYDR.	
28	VGWA00686	1	VALVE	
29	VGWA0168V	4	PIN	
30	VGWA037	1	LOCKING LEVER, LH	
31	VG11697010V	2	PIN	
32	VGND6344	1	REPAIR SET	
33	VGND6352	1	REPAIR SET	
34	VGWA00763	1	REPAIR SET	
35	VGWA036	1	LOCKING LEVER, RH	
36	VGWA297V	1	PIN	
37	VGWA513	2	HOSE, HP	
38	VGWA515	2	HOSE, HP	
39	VGYD64	1	HOSE, HP	
40	VGWA549	1	HOSE, HP	

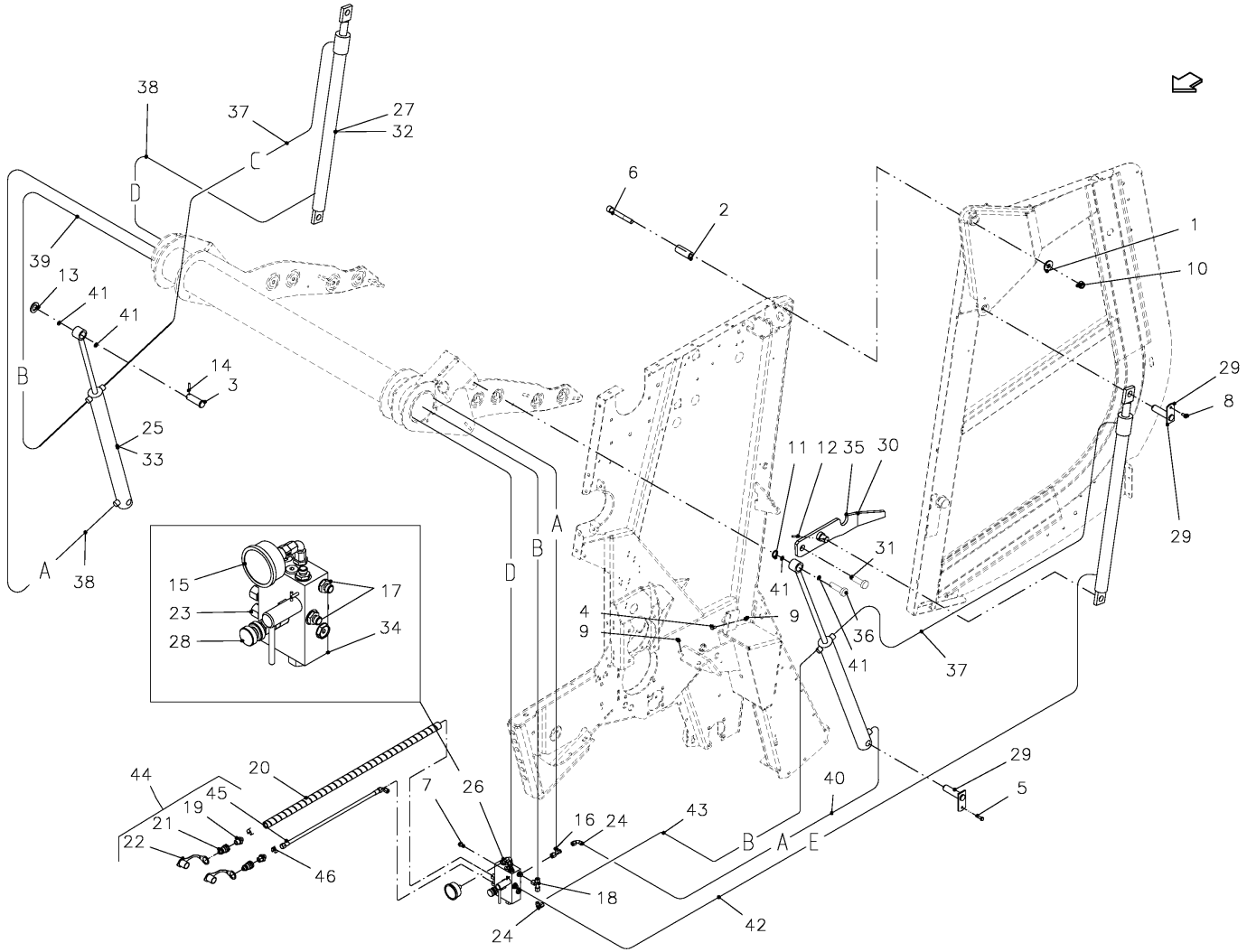
38
37
27
32
C
D
6
2
1
10
39
13
41
41
14
3
B
25
33
29
8
11 12 35 30
31
29
A
38
15
23
28
17
34
A
B
D
41
4
9
9
36
41
37
44
20
45
19
21
22
46
7
26
16 24
43
40
29
5
B
A
E
18
24
42
SPMVG000884

PosNo.	Part No.	Qty.	Description	Remark
41	VGWA707	4	SLEEVE, CUSHION	
42	VGYD62	1	HOSE, HP	
43	VGRL299	1	HOSE, HP	
44	VGRL00637	2	HOSE, HP	
45	VGRL637	2	HOSE, HP	
46	AC351803	1	SET TUBE CLIP RED-GREEN-YELLOW-BLUE 16PC	

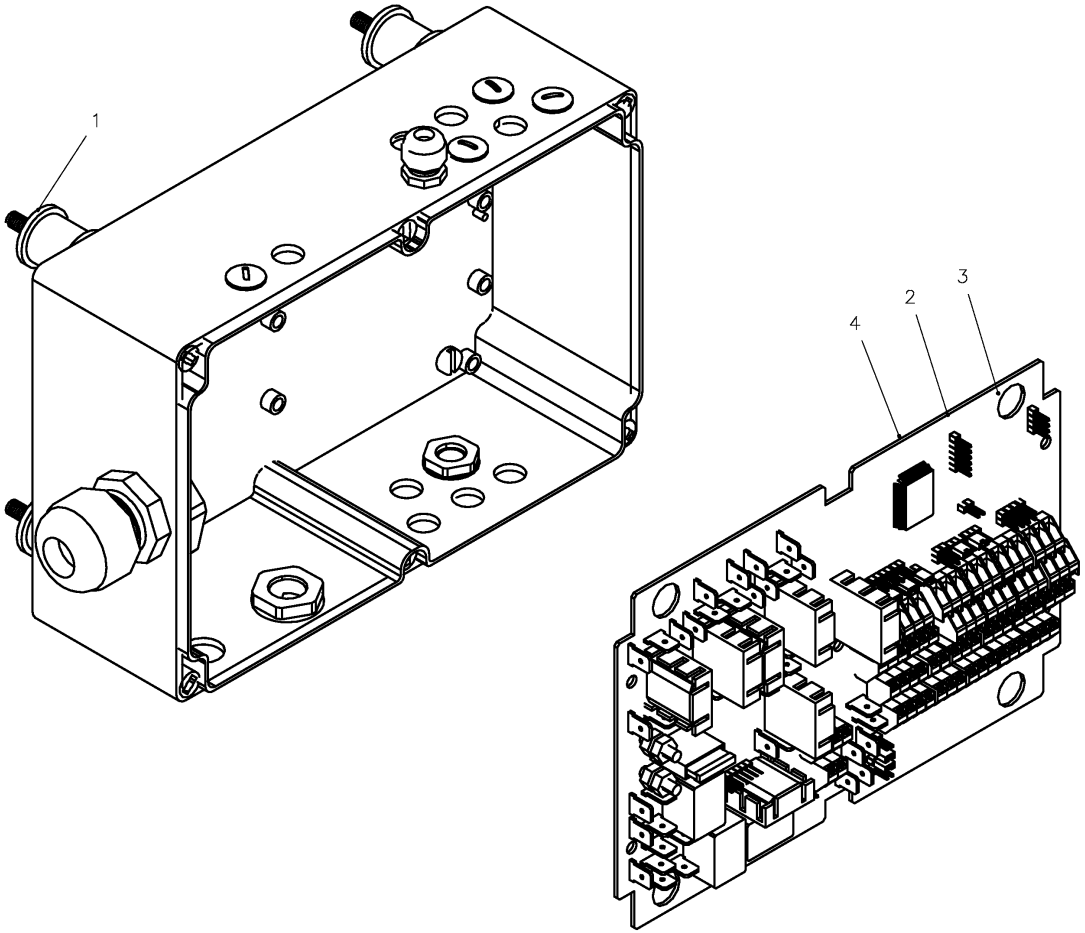

SPMVG000208

6490 / CONNECTIONS, ELEC.

PosNo.	Part No.	Qty.	Description	Remark
1	VNB2541878	1	SHOCKABSORBER M6 20X20	
2	MT00000770	1	PCB ISO VAR V1.05	ISO-VAR PROGRAMMED
3	VNB0631273	1	PCB BIP FULL CONFIG NO SW	NO SOFTWARE
4	MT00000530	1	PCB MBOX AUTOPLUS VAR V1.01	AUTOPLUS PROGRAMMED

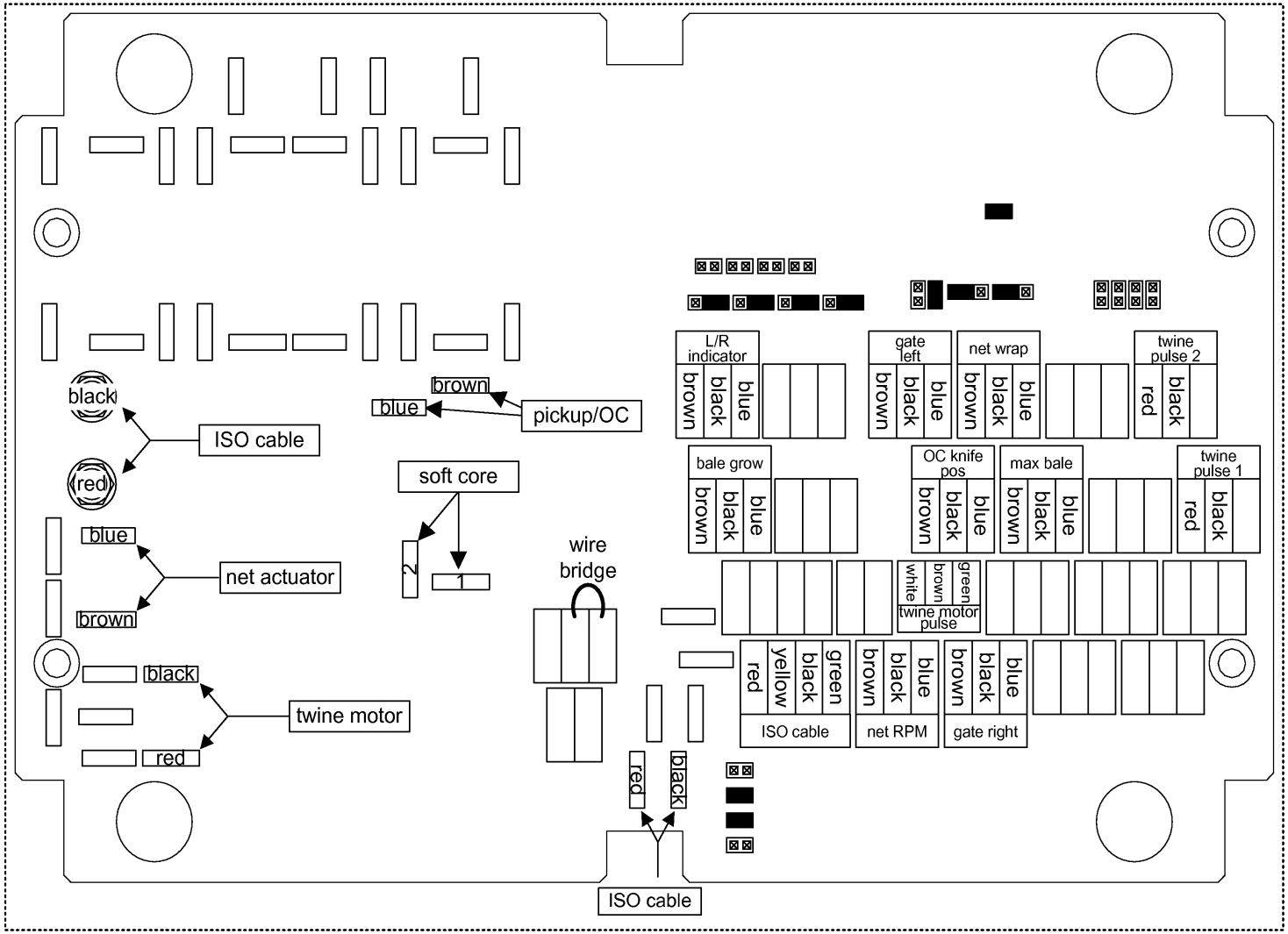
black
red
ISO cable
blue
brown
pickup/OC
soft core
2
1
blue
brown
net actuator
wire
bridge
black
red
twine motor
red
black
ISO cable
L/R
indicator
brown
black
blue
gate
left
brown
black
blue
net wrap
brown
black
blue
twine
pulse 2
red
black
bale grow
brown
black
blue
OC knife
pos
brown
black
blue
max bale
brown
black
blue
twine
pulse 1
red
black
white
brown
green
twine motor
pulse
red
yellow
black
green
ISO cable
brown
black
blue
net RPM
brown
black
blue
gate right

0802RL-26

6490 / CONNECTIONS, ELEC.

PosNo.	Part No.	Qty.	Description	Remark

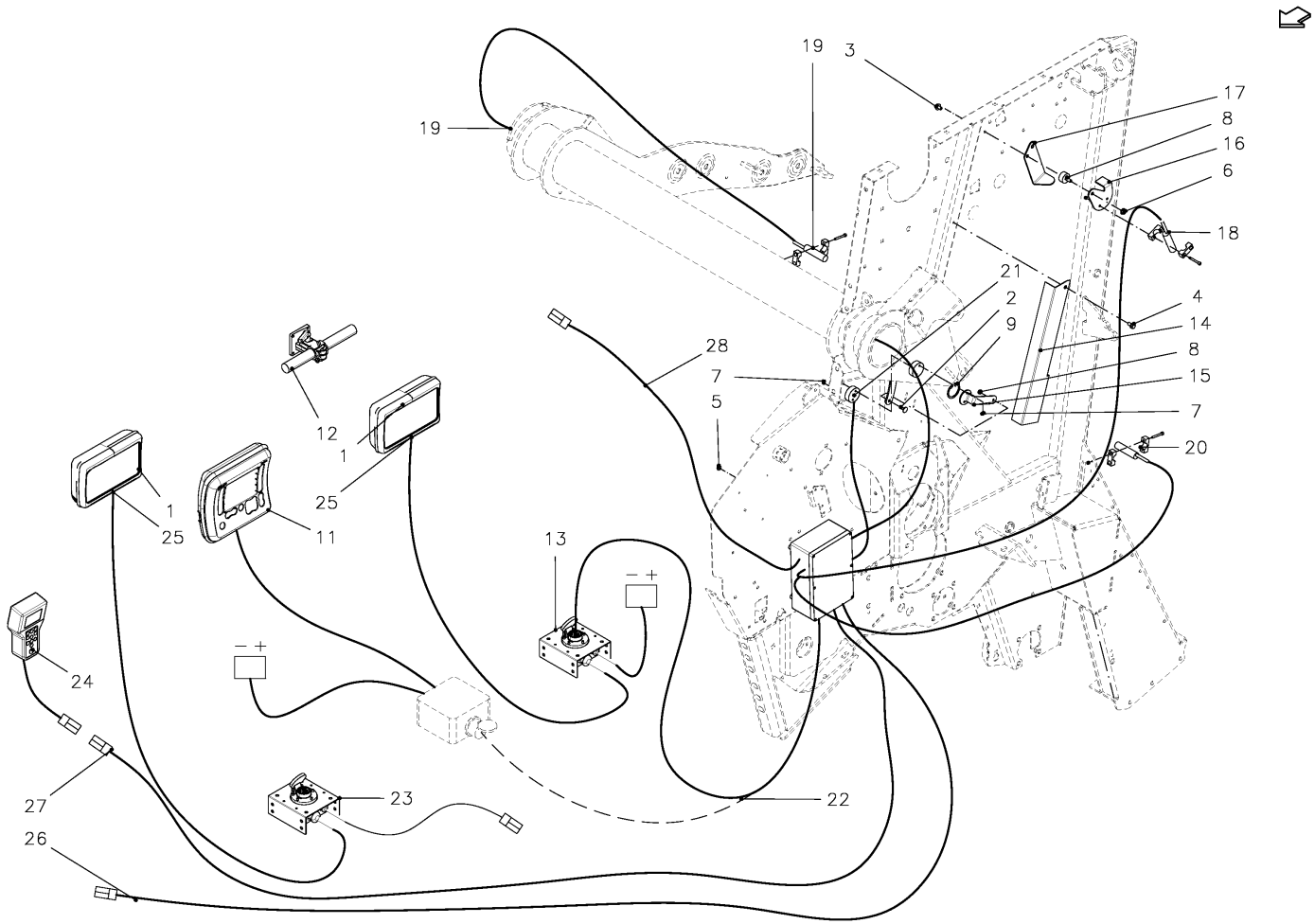

SPMVG000204

6490 / CONTROL BOX

PosNo.	Part No.	Qty.	Description	Remark
1	VNB0567973	1	PILOTBOX FOCUS2	
2	KG00637061	1	CARRIAGE BOLT M6X16 8.8	
3	KG00981061	1	FLANGED BOLT M8X12 90	
4	KG01000661	2	FLANGED BOLT M8X15	
5	KG01061161	4	LOCK NUT M6 8	
6	KG01061261	1	LOCK NUT M8 8	
7	KG01067261	4	LOCK NUT M5	
8	VGND90040	2	DAMPER VIBRATION	
9	KG01128700	1	CIRCLIP-B 47 X 1.75	
11	VN79730309	1	BB TELLUS VIRTUAL TERMINAL	
12	VNB0542973	1	CLAMP SET	
13	VNB0570573	1	SWITCHED POWER CABLE	FOCUS 2 TERMINAL
14	VGWA2098K0	1	PROFILE, ANGLE	
15	VGWA442V	1	LEVER	
16	VGWA708V	1	LEVER	
17	VGWA709V	1	PLATE	
18	VNB0450573	1	SENSOR ASSY PROX PLASTIC L=2.2M	
19	VNB0448873	1	SENSOR ASSY PROX PLASTIC L=4.5	
20	VNB0449073	1	SENSOR ASSY PROX PLASTIC L=2.5	
21	VNB0449273	1	SENSOR ASSY ANG 90DEG L=1.6M	
22	VNB0270473	1	CABLE ISO CONNECTION L=6M	
23	VNB0570573	1	SWITCHED POWER CABLE	FOCUS 2 TERMINAL
24	MT00000519	1	PILOTBOX PORTUS	
25	VNB0266373	2	CONNECTOR ASSY BUZZER	
26	VNB0253273	1	CABLE POWER L=6M	AUTOPLUS
27	MT00000520	1	CABLE CAN FEMALE L=6M	AUTOPLUS
28	VNB0260073	1	CABLE MOTOR L=1.5M	

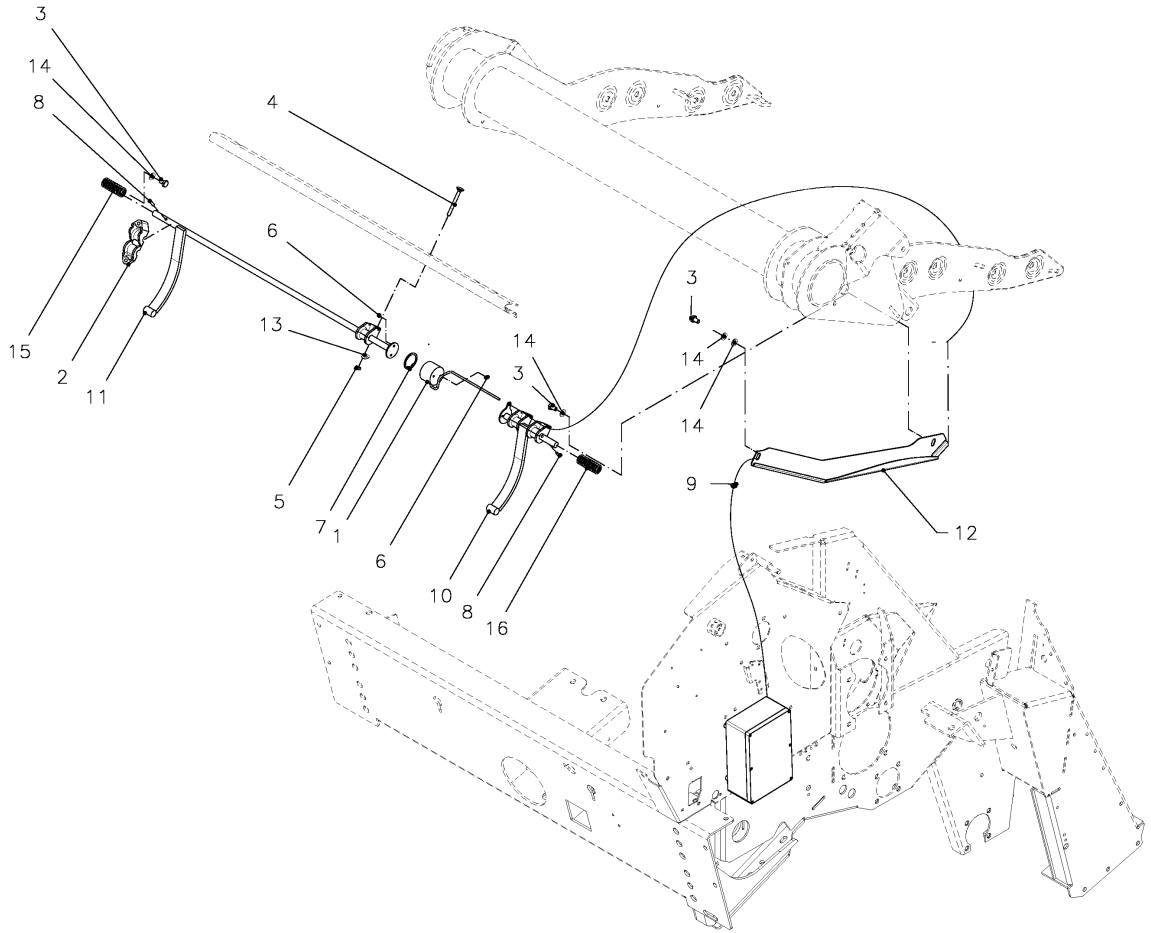

SPMVG000206

6490 / INDICATOR

PosNo.	Part No.	Qty.	Description	Remark
1	VNB0443173	1	SENSOR ASSY ANG 90DEG L=2.5M	
2	VGBR785	4	HOLDER	
3	KG00473961	4	HEX. SCREW M10X16 8.8	
4	KG00640261	4	CARRIAGE BOLT M8X80 8.8	
5	KG01051961	4	HEX. NUT M8 8	
6	KG01067261	4	LOCK NUT M5	
7	KG01128700	1	CIRCLIP-B 47 X 1.75	
8	KG01189262	2	TENSION PIN 6X24	
9	VGND9844	1	SLEEVE, CONDUCT THROUGH	
10	VGWA0523	1	INDICATOR, LH	
11	VGWA0524	1	INDICATOR, RH	
12	VGWA1159	1	GUIDE, CABLE	
13	VGND3146V	4	RING	
14	VGND3147V	4	RING	
15	VGPZ100	1	SPRING, TORSION, RH	
16	VGPZ99	1	SPRING, TORSION, LH	

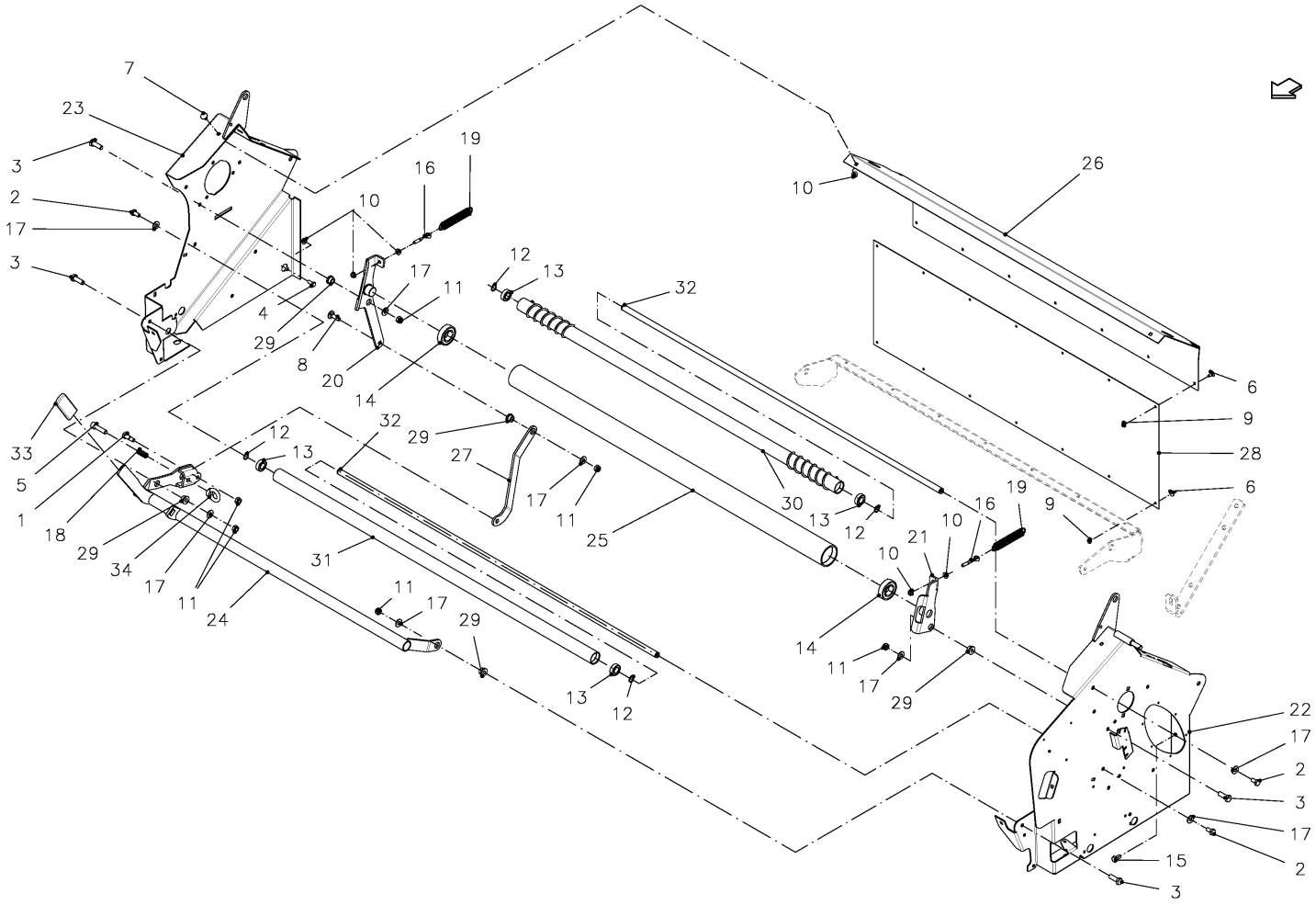

SPMVG000391

6490 / NET WRAP SET

PosNo.	Part No.	Qty.	Description	Remark
1	VGEP227V	1	BOLT, TIGHT-FIT	
2	KG00456361	4	HEX. SCREW M10X20 10.9	
3	KG00456561	4	HEX. SCREW M10X30 10.9	
4	KG00471961	1	HEX. SCREW M8X20 8.8	
5	KG00549761	1	CHEESE HEAD SCREW M12X45 8.8	
6	KG00637061	14	CARRIAGE BOLT M6X16 8.8	
7	KG00638961	4	CARRIAGE BOLT M8X16 8.8	
8	KG00641661	1	CARRIAGE BOLT M10X35 8.8	
9	KG01061161	14	LOCK NUT M6 8	
10	KG01061261	9	LOCK NUT M8 8	
11	KG01068861	6	LOCK NUT M10 10	
12	KG01107562	4	CIRCLIP-A 17 X 1	
13	KG01354500	4	BALL BEARING 6003-2RS	
14	KG01380000	2	BALL BEARING 6206-2RS	
15	VGND1461V	1	BOLT, TAPTITE	
16	VGND1607V	2	BOLT, EYE	
17	VGND3147V	8	RING	
18	VGPZ170V	1	SPRING, COMPRESSION	
19	VGPZ302V	2	SPRING, TENSION	
20	VGRL0144K0	1	SUPPORT, RH	
21	VGRL0145K0	1	SUPPORT, LH	
22	VGRL0383K0	1	SUPPORT, LH	
23	VGRL0384K0	1	SUPPORT, RH	
24	VGRL0411K0	1	FRAME	
25	VGRL38V	1	PIPE	
26	VGRL414K0	1	PLATE	
27	VGRL418K0	1	BAR, PUSH	
28	VGRL54	1	PROTECTION CURTAIN	
29	UH300562	5	BUSHING Ø11X13-Ø19/9	
30	VGWA01490K0	1	ROLLER	
31	VGWA1490K1	1	ROLLER	
32	VGWA1493	2	AXLE	
33	VGWA453	1	GRIP	
34	KG01094161	1	EYE NUT M12 C15	

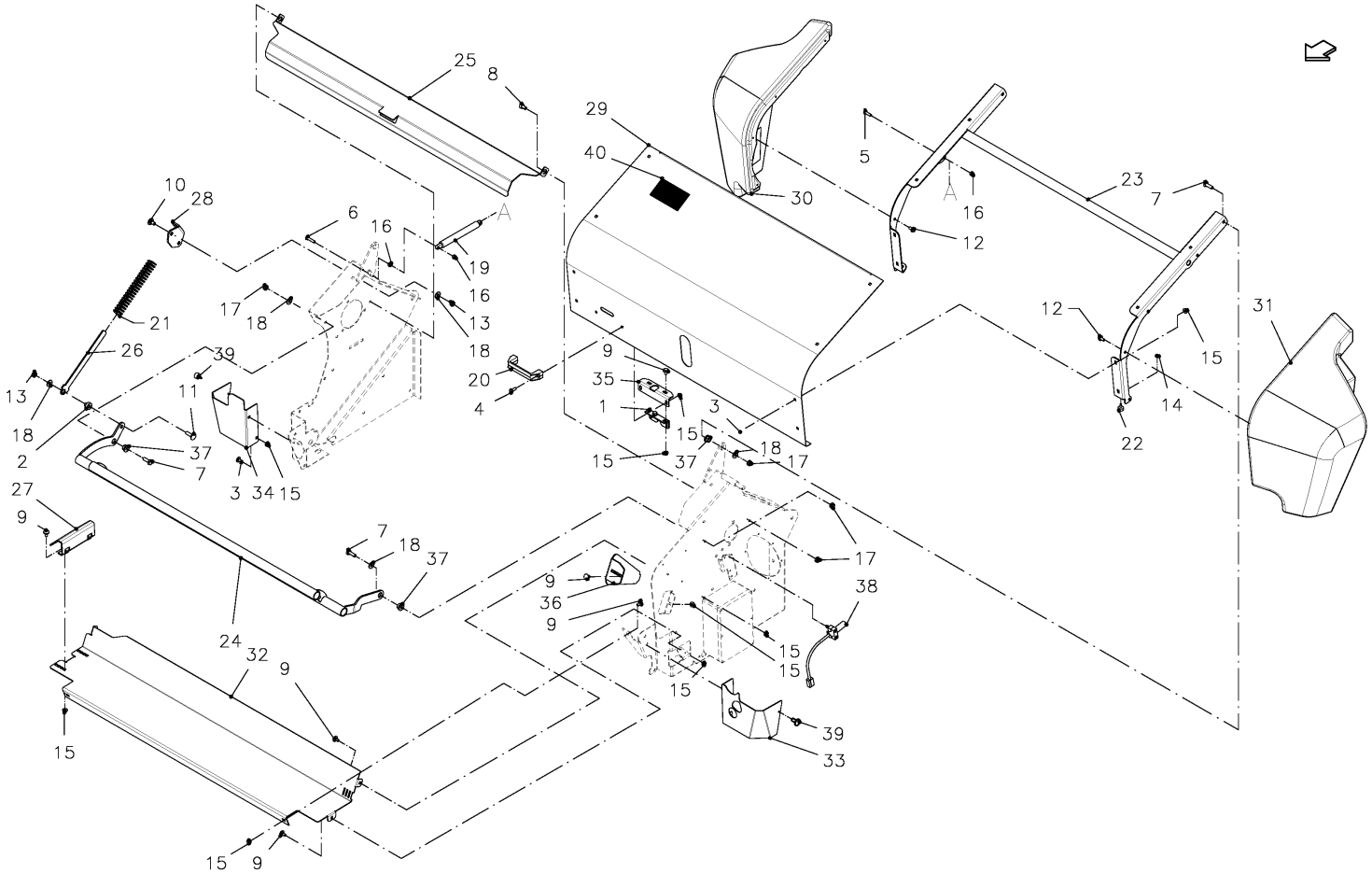

SPMVG000437

6490 / NET WRAP SET

PosNo.	Part No.	Qty.	Description	Remark
1	VF16611457	1	LOCK	
2	VGDN807V	1	SLEEVE	
3	VGGM152V	10	CARRIAGE BOLT	
4	KG00471961	1	HEX. SCREW M8X20 8.8	
5	KG00472161	1	HEX. SCREW M8X25 8.8	
6	KG00472361	1	HEX. SCREW M8X35 8.8	
7	KG00474361	4	HEX. SCREW M10X30 8.8	
8	KG00546661	2	CHEESE HEAD SCREW M10X16 8.8	
9	KG00638961	11	CARRIAGE BOLT M8X16 8.8	
10	KG00641361	2	CARRIAGE BOLT M10X20 8.8	
11	KG00641661	1	CARRIAGE BOLT M10X35 8.8	
12	KG00981161	8	FLANGED BOLT M8X16 90	
13	KG01052061	2	HEX. NUT M10 8	
14	KG01061161	2	LOCK NUT M6 8	
15	KG01061261	21	LOCK NUT M8 8	
16	KG01068761	3	LOCK NUT M8 10	
17	KG01068861	6	LOCK NUT M10 10	
18	VGND3147V	7	RING	
19	VGND90038	1	SPRING, GAS	
20	VGND95068	1	GRIP	
21	VGPZ480V	1	SPRING, COMPRESSION	
22	VRR0096801	1	STOP	
23	VGRL0387K0	1	FRAME	
24	VGRL0421K0	1	FRAME	
25	VGRL133K0	1	PLATE	
26	VGRL140K0	1	PLATE	
27	VGRL147K0	1	PLATE	
28	VGRL16K0	1	SUPPORT	
29	VGRL389K0	1	COVER,	
30	VGRL390	1	COVER, RH	
31	VGRL391	1	COVER, LH	
32	VGRL419K0	1	PLATE	
33	VGRL429K0	1	GUARD, PROTECT., LH	
34	VGRL430K0	1	GUARD, PROTECT., RH	
35	VGRL466K0	1	SUPPORT	
36	VGRL481K0	1	SUPPORT	
37	UH300562	4	BUSHING Ø11X13-Ø19/9	
38	VNB0449173	1	SENSOR ASSY PROX PLASTIC L=0.6	
39	VGND95049	2	PLUG, PLASTIC	
40	VGTR3097	1	DECAL	

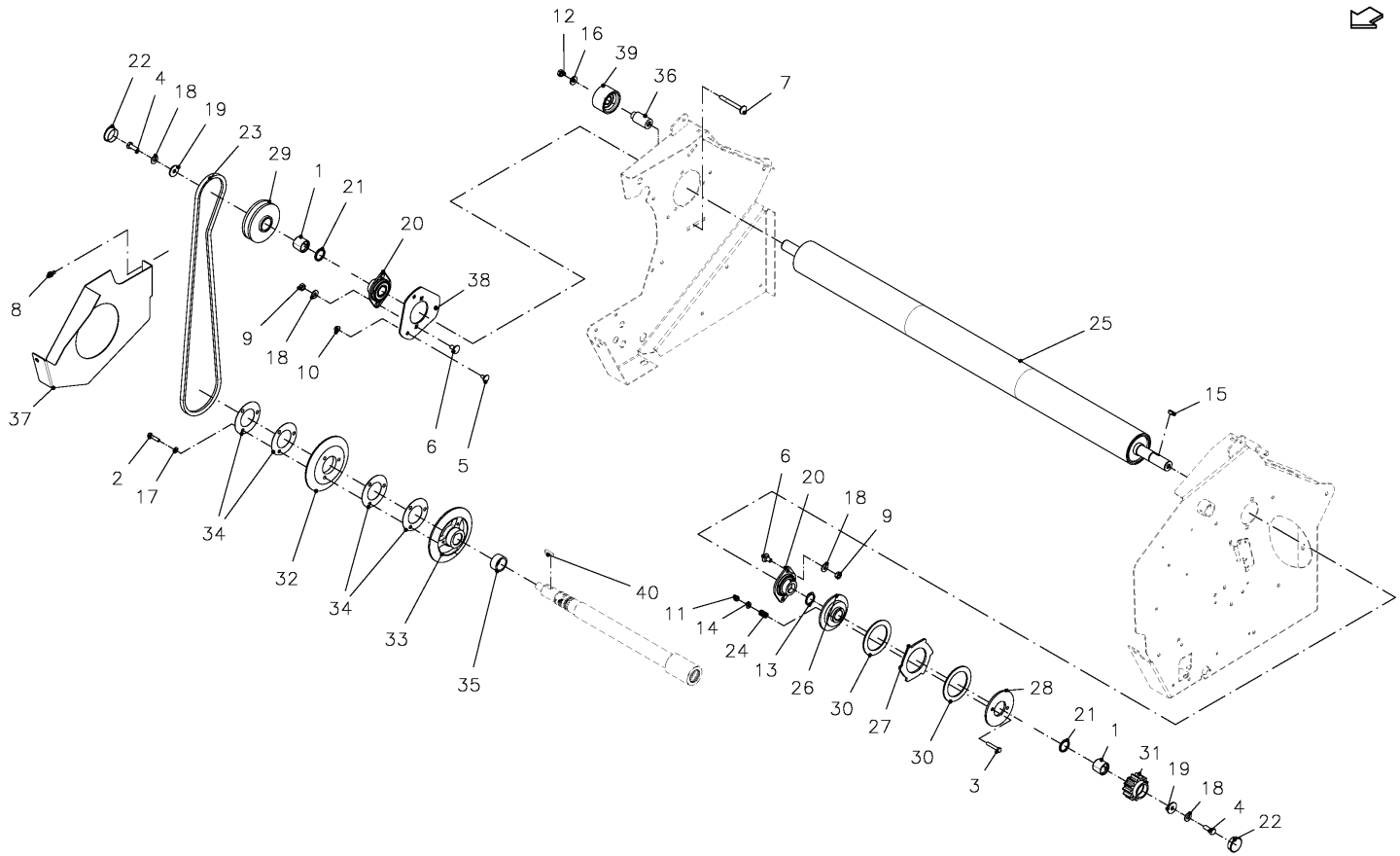

SPMVG000398

6490 / DRIVE, NET WRAP

PosNo.	Part No.	Qty.	Description	Remark
1	AC674143	2	INA FREE WHEEL HFL 3030	
2	KG00353161	3	HEX. BOLT M8X35 8.8	
3	KG00472561	2	HEX. SCREW M8X45 8.8	
4	KG00474361	2	HEX. SCREW M10X30 8.8	
5	KG00638961	3	CARRIAGE BOLT M8X16 8.8	
6	KG00641361	4	CARRIAGE BOLT M10X20 8.8	
7	KG00642661	1	CARRIAGE BOLT M10X90 8.8	
8	KG01000661	1	FLANGED BOLT M8X15	
9	KG01052061	4	HEX. NUT M10 8	
10	KG01061261	3	LOCK NUT M8 8	
11	KG01068761	2	LOCK NUT M8 10	
12	KG01068861	3	LOCK NUT M10 10	
13	KG01099062	1	CIRCLIP-A 30 X 2	
14	KG01267361	2	WASHER M8	
15	KG01306400	1	KEY 8X7X20	
16	VGMH416V	1	RING	
17	VGND3146V	3	RING	
18	VGND3147V	6	RING	
19	VGND3177V	2	WASHER, PLAIN	
20	VGND5141	2	CUSHION, BALL, ADJUSTABLE	
21	VGND6372	2	RING, SEALING	
22	VGND95057	2	CAP, PLASTIC	
23	VGND96132	1	V-BELT	
24	VGPZ477V	1	SPRING, COMPRESSION	
25	VGRL02	1	ROLLER	
26	VGRL1V	1	PULLEY, V-BELT	
27	VGRL171V	1	HUB	
28	VGRL172V	1	DISC ROTOR	
29	VGRL173V	1	DISC ROTOR	
30	VGRL224	2	BRAKE LINING	
31	VGRL265V	1	PINION	
32	VGRL50V	1	DISC ROTOR	
33	VGRL51V	1	DISC ROTOR	
34	VGRL52V	4	RING	
35	VGRL55V	1	SLEEVE	
36	VGRL56V	1	SLEEVE	
37	VGRL569K0	1	COVER,	
38	VGRL8K0	1	PLATE	
39	VGWA02015	1	ROLLER, NYLON	
40	KG01308600	1	KEY 10X8X28	

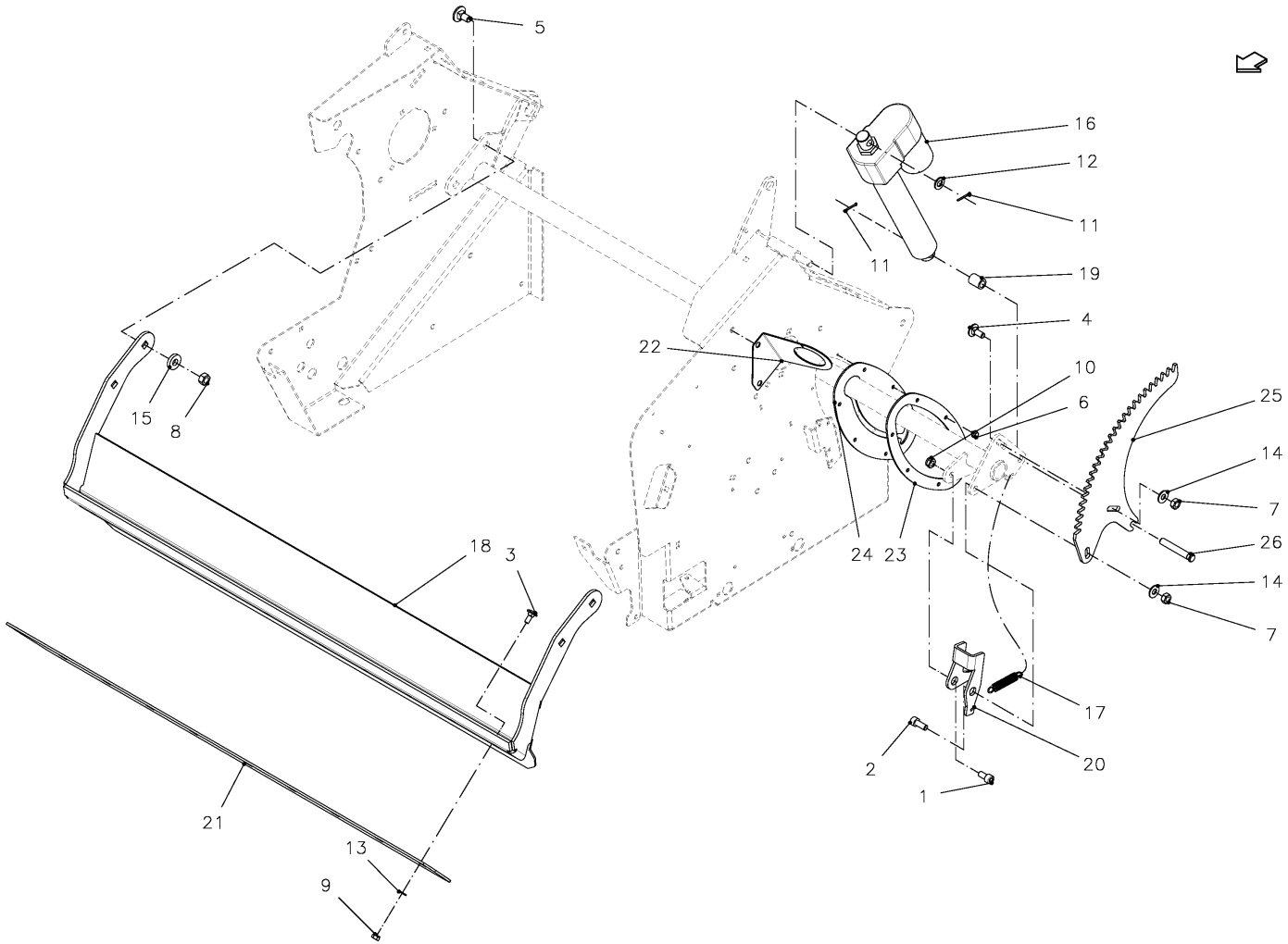

SPMVG000887

6490 / GUIDE CPL.

PosNo.	Part No.	Qty.	Description	Remark
1	KG00546761	4	CHEESE HEAD SCREW M10X20 8.8	
2	KG00546861	1	CHEESE HEAD SCREW M10X25 8.8	
3	KG00639061	10	CARRIAGE BOLT M8X20 8.8	
4	KG00641461	1	CARRIAGE BOLT M10X25 8.8	
5	KG00644761	4	CARRIAGE BOLT M12X25 8.8	
6	KG01000161	6	FLANGED BOLT M6X12	
7	KG01052061	2	HEX. NUT M10 8	
8	KG01052161	4	HEX. NUT M12 8	
9	KG01068761	10	LOCK NUT M8 10	
10	KG01068861	1	LOCK NUT M10 10	
11	KG01249861	1	SPLIT PIN 3.2X25 ST	
12	KG01267561	1	WASHER M12	
13	VGND3030V	10	WASHER, PLAIN	
14	VGND3147V	2	RING	
15	VGND3148V	4	CIRCLIP	
16	VGND91037	1	ACTUATOR	
17	VGPZ474V	1	SPRING, TENSION	
18	VGRL0156K0	1	NET INTAKE PLATE	
19	VGRL227V	1	SLEEVE	
20	VGRL257K0	1	CAM	
21	VGRL31	1	PLATE, PLASTIC	
22	VGRL467K0	1	SUPPORT	
23	VGRL468K0	1	RING	
24	VGRL475	1	SEAL	
25	VGRL878K0	1	GEAR RIM	
26	VGRL879V	1	PIN	

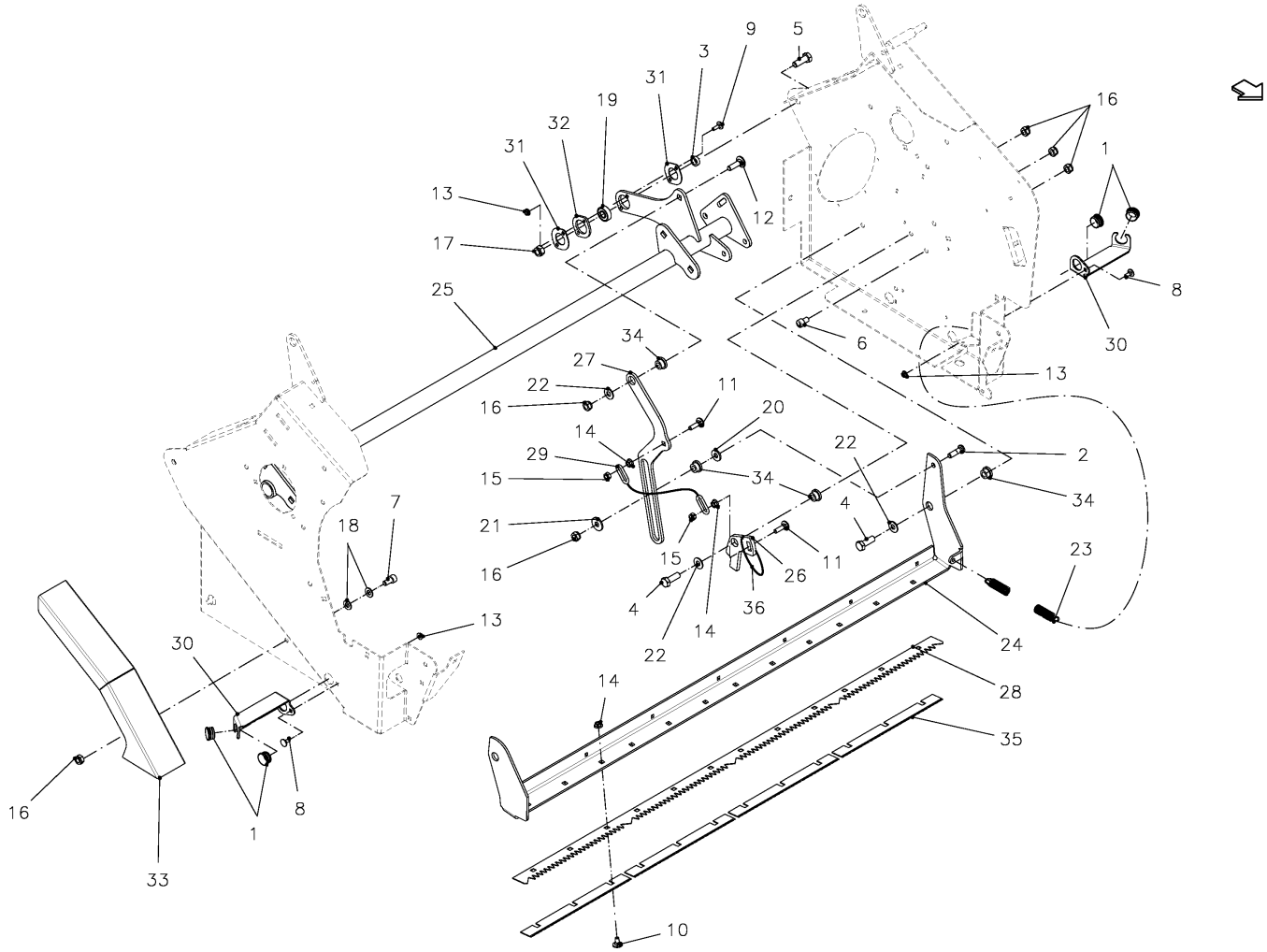

SPMVG000886

6490 / GUIDE CPL.

PosNo.	Part No.	Qty.	Description	Remark
1	VG13128001V	4	GUIDE	
2	VGET312V	1	SCREW, KNURLED STUD	
3	VGGP899V	1	SLEEVE	
4	KG00456561	2	HEX. SCREW M10X30 10.9	
5	KG00457361	1	HEX. SCREW M12X35 10.9	
6	KG00546661	1	CHEESE HEAD SCREW M10X16 8.8	
7	KG00546761	1	CHEESE HEAD SCREW M10X20 8.8	
8	KG00637061	2	CARRIAGE BOLT M6X16 8.8	
9	KG00637161	4	CARRIAGE BOLT M6X20 8.8	
10	KG00638961	13	CARRIAGE BOLT M8X16 8.8	
11	KG00639261	2	CARRIAGE BOLT M8X30 8.8	
12	KG00641661	1	CARRIAGE BOLT M10X35 8.8	
13	KG01061161	4	LOCK NUT M6 8	
14	KG01061261	15	LOCK NUT M8 8	
15	KG01068761	2	LOCK NUT M8 10	
16	KG01068861	6	LOCK NUT M10 10	
17	KG01068961	2	LOCK NUT M12 10	
18	KG01267461	2	WASHER M10	
19	KG01374500	2	BALL BEARING 6201-2RS	
20	VGMH416V	1	RING	
21	VGMT152V	1	RING	
22	VGND3147V	3	RING	
23	VGPZ483V	1	SPRING, TENSION	
24	VGRL0128K0	1	HOLDER, BLADE	
25	VGRL0499K0	1	SUPPORT	
26	VGRL131V	1	PLATE	
27	VGRL132K0	1	ARM	
28	VGRL22K0	1	GUARD, PROTECT.	
29	VGRL260V	1	CHAIN	
30	VGRL263V	2	PLATE	
31	VGRL473V	4	RING	
32	VGRL474V	2	RING	
33	VGRL599K0	1	COVER,	
34	UH300562	5	BUSHING Ø11X13-Ø19/9	
35	UH453537	4	BLADE	
36	VGWA1250	1	RUBBER	

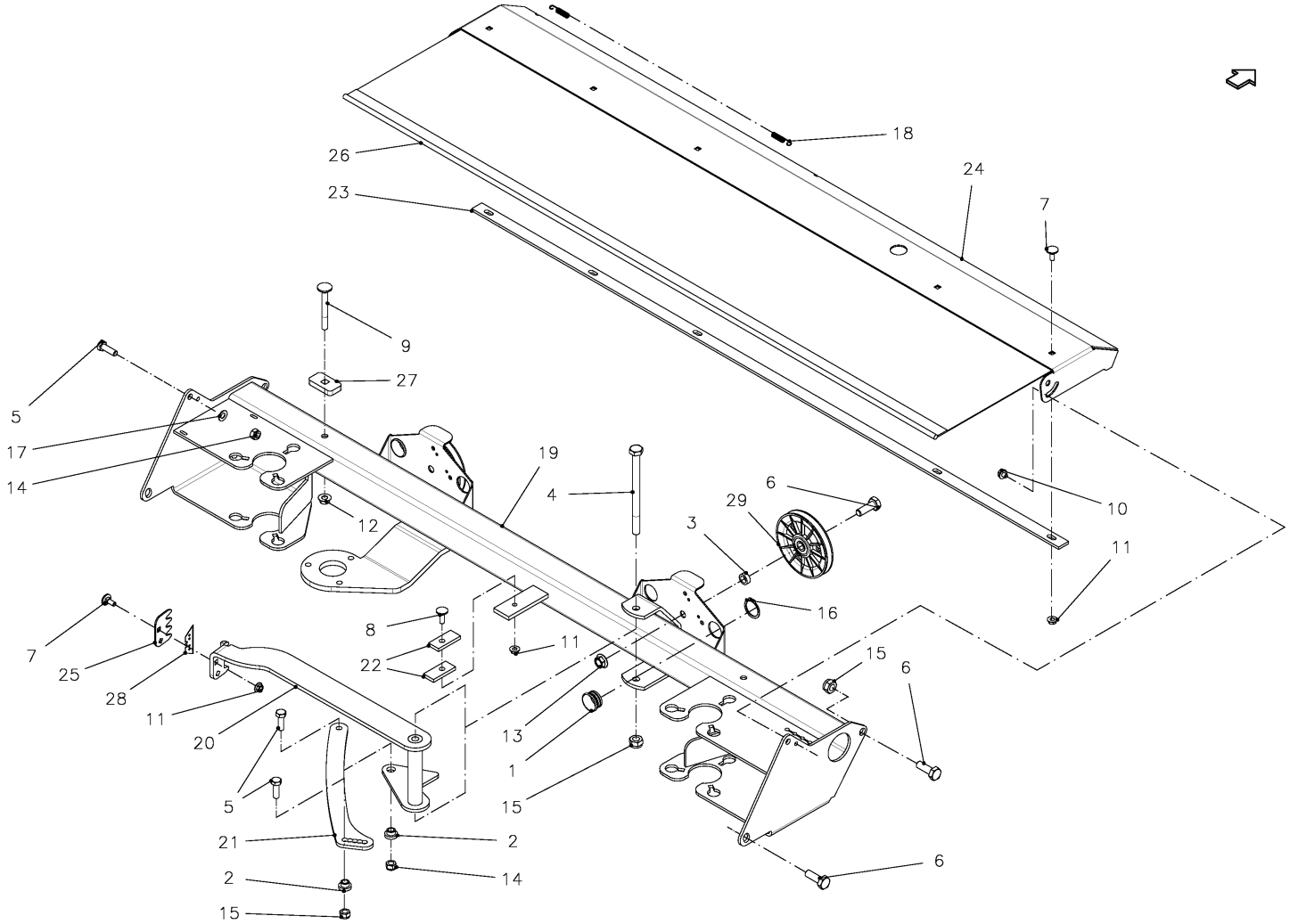

SPMVG000412

6490 / TWINE TIE FRAME

PosNo.	Part No.	Qty.	Description	Remark
1	VG13128001V	2	GUIDE	
2	VR13698033	2	SLEEVE	
3	VGBP906V	2	BUSH	
4	KG00356761	1	HEX. BOLT M10X140 8.8	
5	KG00472100	4	HEX. SCREW M8X25 8.8	
6	KG00474361	6	HEX. SCREW M10X30 8.8	
7	KG00637061	7	CARRIAGE BOLT M6X16 8.8	
8	KG00637161	1	CARRIAGE BOLT M6X20 8.8	
9	KG00640061	2	CARRIAGE BOLT M8X70 8.8	
10	KG01000161	2	FLANGED BOLT M6X12	
11	KG01061161	8	LOCK NUT M6 8	
12	KG01061261	2	LOCK NUT M8 8	
13	KG01061361	2	LOCK NUT M10 8	
14	KG01068761	4	LOCK NUT M8 10	
15	KG01068861	5	LOCK NUT M10 10	
16	KG01108362	2	CIRCLIP-A 25 X 1.2	
17	KG01294162	2	DISC SPRING 16X8.2X0.9	
18	VGPZ479	1	SPRING, TENSION	
19	VGRL0178K0	1	FRAME	
20	VGRL0233K0	1	HOLDER, BLADE	
21	VGRL247V	1	STRIP	
22	VGRL248	2	PLATE	
23	VGRL469K0	1	STRIP	
24	VGRL470K0	1	GUARD PLATE	
25	VGRL472V	1	GUARD PLATE	
26	VGRL479	1	PROTECTION CURTAIN	
27	VGRL863V	2	STRIP	
28	UH411750	5	KNIFE	
29	VGWA909	2	PULLEY, CABLE	

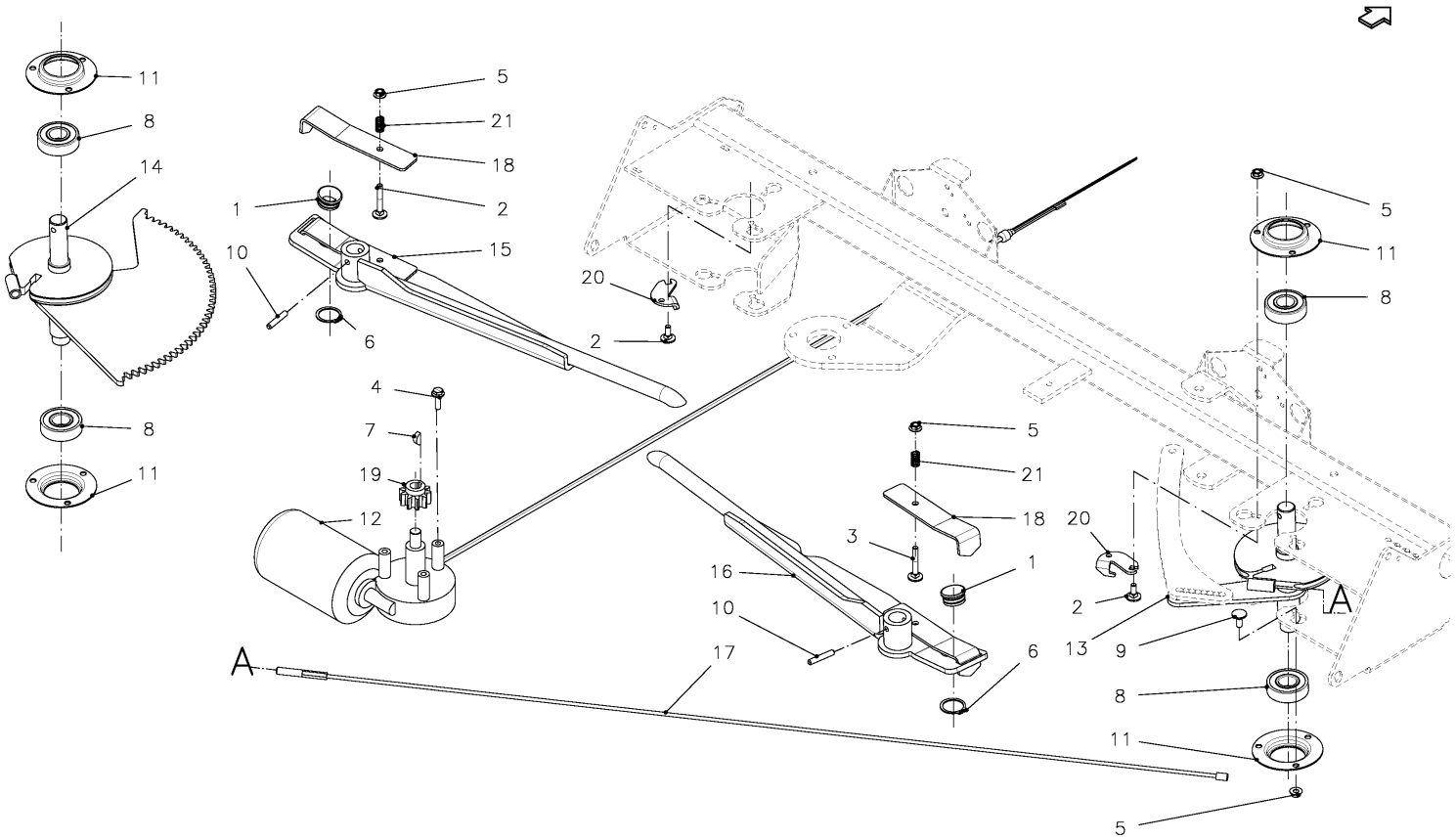

SPMVG000889

6490 / TWINE TIE SYSTEM

PosNo.	Part No.	Qty.	Description	Remark
1	VG13128001V	2	GUIDE	
2	KG00637061	2	CARRIAGE BOLT M6X16 8.8	
3	KG00637561	2	CARRIAGE BOLT M6X40 8.8	
4	KG00980761	3	FLANGED BOLT M6X20 90	
5	KG01067361	12	LOCK NUT M6 8	
6	KG01108362	2	CIRCLIP-A 25 X 1.2	
7	KG01300800	1	KEY	
8	KG01377800	4	BALL BEARING 6204-2RS	
9	VGND1176V	10	CARRIAGE BOLT	
10	VGND4030V	2	PIN, TENSION	
11	VGNK622V	4	LID	
12	VGRL00461	1	MOTOR, ELECTRIC	
13	VGRL0187K0	1	AXLE, RH	
14	VGRL0189K0	1	AXLE, LH	
15	VGRL0251K0	1	PIPE, TWINE FEED LH	
16	VGRL0252K0	1	PIPE, TWINE FEED RH	
17	VGRL310	1	CABLE, STEEL	
18	VGRL311V	2	BRAKE	
19	VGRL335	1	SPROCKET	
20	VGRL864V	2	SCRAPER	
21	VGPZ482	2	SPRING, COMPRESSION	

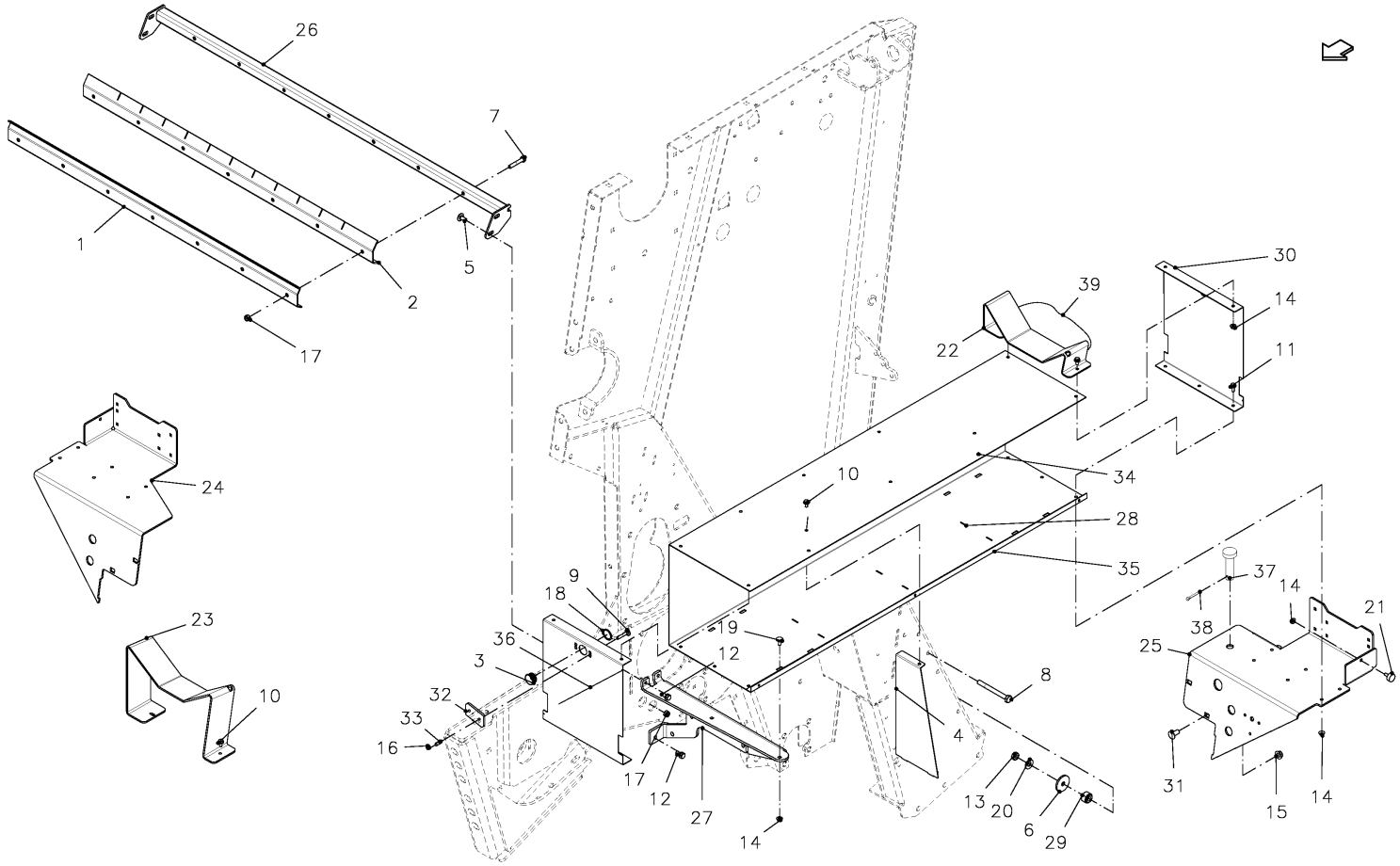

SPMVG000890

6490 / BOX, TWINE

PosNo.	Part No.	Qty.	Description	Remark
1	VF06576898.86	1	TERMINAL STRIP	
2	VF06576899	1	STRIPPER	
3	VG13128001V	2	GUIDE	
4	VGBR859	6	BULKHEAD	
5	VGGM152V	4	CARRIAGE BOLT	
6	VGHK116V	2	RING	
7	KG00353361	7	HEX. BOLT M8X45 8.8	
8	KG00356361	2	HEX. BOLT M10X100 8.8	
9	KG00637461	4	CARRIAGE BOLT M6X35 8.8	
10	KG00980561	20	FLANGED BOLT M6X12 90	
11	KG00980661	6	FLANGED BOLT M6X16 90	
12	KG01000661	6	FLANGED BOLT M8X15	
13	KG01052061	2	HEX. NUT M10 8	
14	KG01061161	36	LOCK NUT M6 8	
15	KG01061361	4	LOCK NUT M10 8	
16	KG01067361	4	LOCK NUT M6 8	
17	KG01068761	14	LOCK NUT M8 10	
18	KG01108362	2	CIRCLIP-A 25 X 1.2	
19	VGND1176V	4	CARRIAGE BOLT	
20	VGND3147V	2	RING	
21	VRR0096801	2	STOP	
22	VGRL407K0	2	SUPPORT, NET ROLL,	
23	VGRL408K0	1	SUPPORT, NET ROLL,	NET ONLY
24	VGRL578K0	1	SUPPORT, RH	
25	VGRL579K0	1	SUPPORT, LH	
26	VGWA0467	1	HOLDER	
27	VGWA1036	2	SUPPORT	
28	VGWA497	2	BOX, TWINE	
29	VGWA540V	2	BUSH	
30	VGWA691	4	PLATE	
31	VGXD296V	4	CARRIAGE BOLT	
32	VGBR132V	2	STRIP	
33	VGPZ457	1	SPRING, COMPRESSION	
34	VGND98110		PROFILE, KLEM-	GIVE LENGTH WHEN ORDERING
35	VGND98109		PROFILE, KLEM-	GIVE LENGTH WHEN ORDERING
36	VGPZ456	1	SPRING, TENSION	
37	VGMT98V	1	PIN	
38	VGPZ25V	1	SPRING CLIP	
39	VGEF75	2	RUBBER	

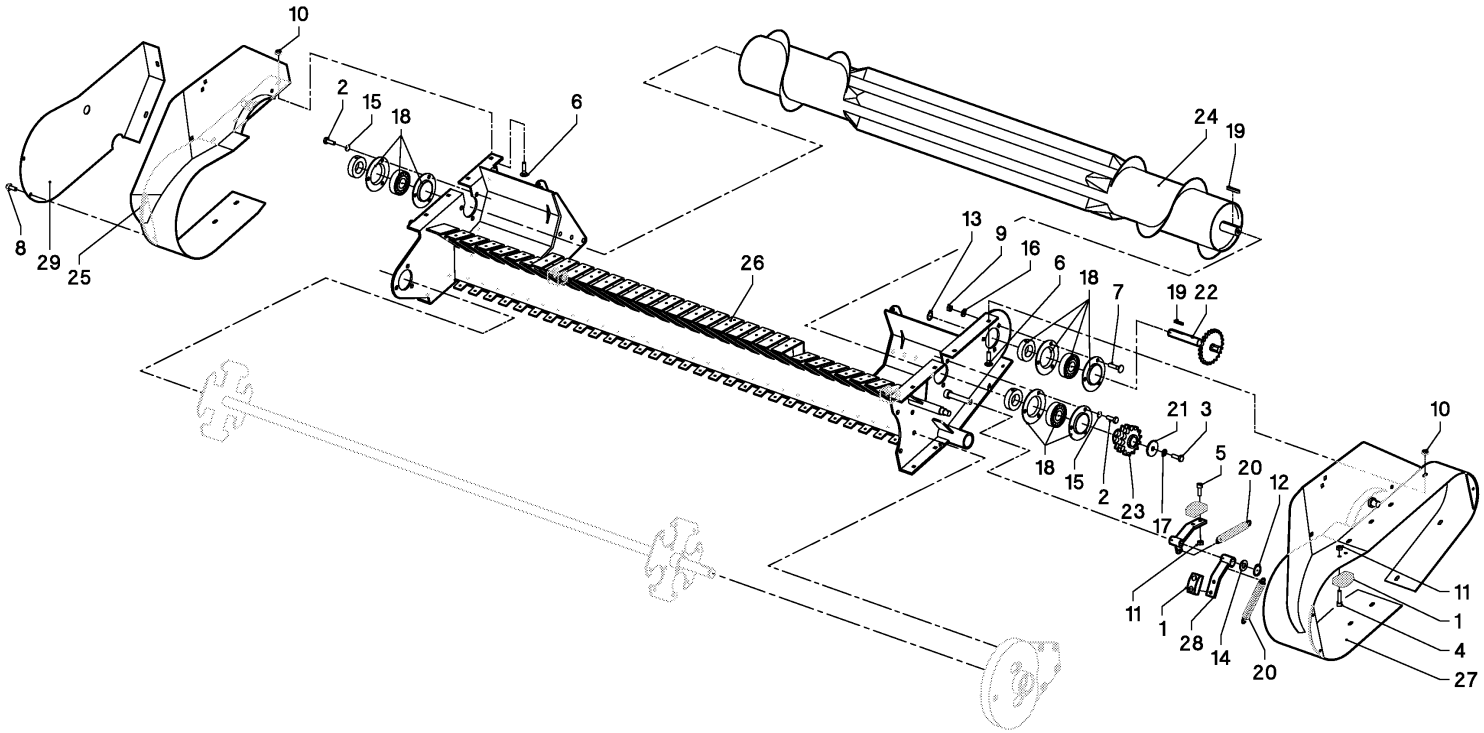
10
2
15
18
6
24
19
8
29
25
26
13
9
16
6
18
7
19
22
21
3
10
5
20
12
18
15
2
23
17
11
1
28
14
20
11
1
4
27

04RL02_38

6490 / PICK-UP, CPL. (WPU)

PosNo.	Part No.	Qty.	Description	Remark
1	VF06246785	3	BLOC	
2	KG00474261	6	HEX. SCREW M10X25 8.8	
3	KG00476561	1	HEX. SCREW M12X30 8.8	
4	KG00545061	2	CHEESE HEAD SCREW M8X20 8.8	
5	KG00545161	4	CHEESE HEAD SCREW M8X25 8.8	
6	KG00639061	16	CARRIAGE BOLT M8X20 8.8	
7	KG00641461	3	CARRIAGE BOLT M10X25 8.8	
8	KG01000661	4	FLANGED BOLT M8X15	
9	KG01052061	3	HEX. NUT M10 8	
10	KG01061261	16	LOCK NUT M8 8	
11	KG01068761	6	LOCK NUT M8 10	
12	KG01107462	1	CIRCLIP-A 16 X 1	
13	KG01108862	1	CIRCLIP-A 30 X 1.5	
14	KG01267761	1	WASHER M16	
15	KG01281761	6	SPRING WASHER M10	
16	VGND3147V	3	RING	
17	VGND3148V	1	CIRCLIP	
18	VGND5187	3	CUSHION, BALL	
19	VGND7027	2	KEY	
20	VGPZ302V	2	SPRING, TENSION	
21	VGTA195V	1	RING	
22	VGRL0766	1	SPROCKET	
23	VGWA0219	1	SPROCKET	
24	VGWA0225	1	AUGER-ROLLER	
25	VGWA0570	1	PLATE, SIDE, RH	
26	VGWA0887	1	FRAME, PICK-UP	
27	VGWA0891	1	PLATE, SIDE, LH	
28	VGWA0899	2	TENSIONER, CHAIN	
29	VGWA592	1	GUARD, PROTECT., RH	

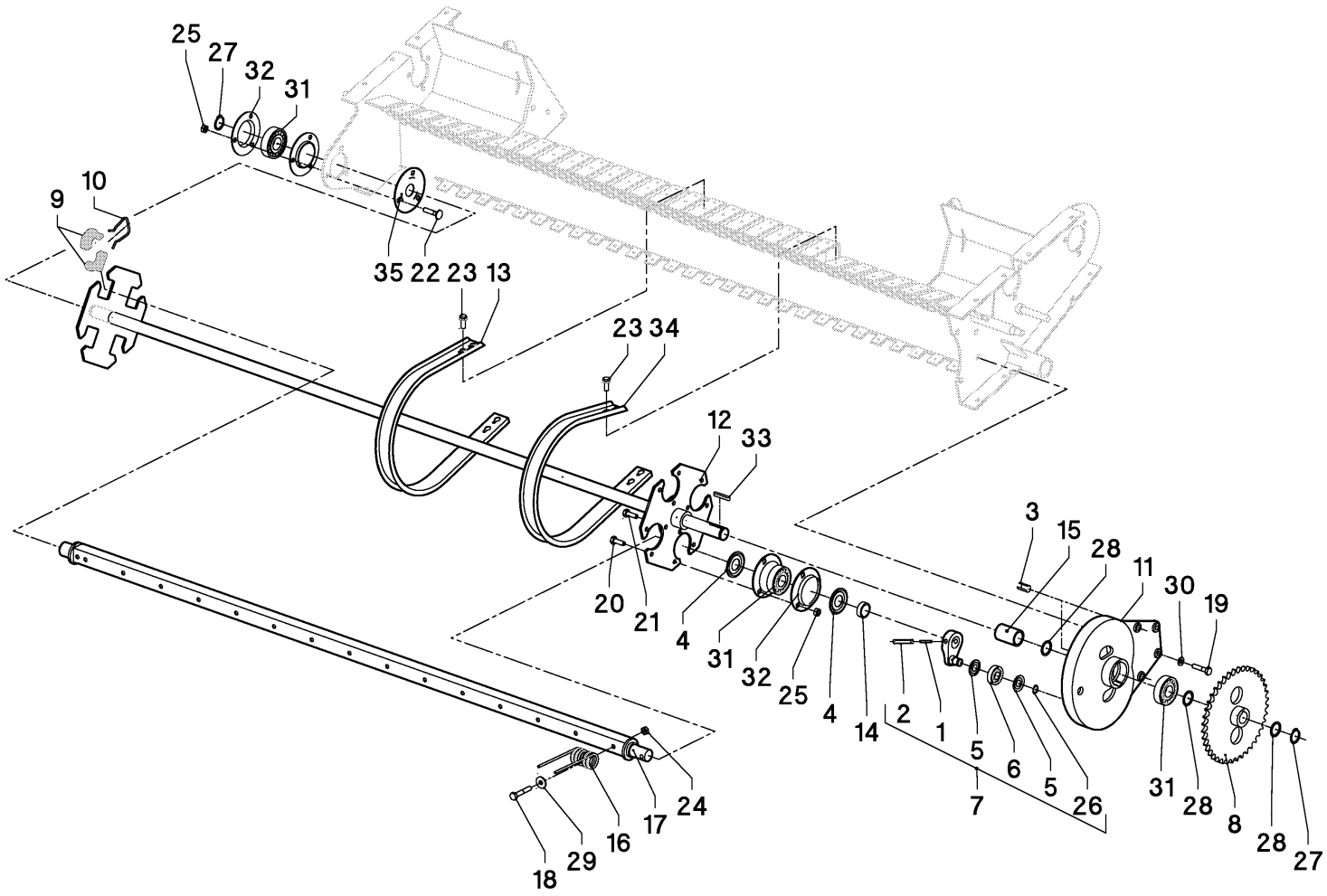
25
27
32
31
10
9
35 22 23 13
23 34
12
33
3
15
28
11
30
19
20
21
4
31
32
25
4
14
2
1
5
6
5
26
7
31
28
8
28
27
24
17
16
29
18

02RL01_30

6490 / AXLE, TINE CARR. (WPU)

PosNo.	Part No.	Qty.	Description	Remark
1	KG01190062	4	TENSION PIN 6X70	
2	VG61.05.04	4	PIN, TENSION	
3	VF01157427	2	DOWEL PIN	
4	VF01170940	2	NILOS-RING	
5	VF06214938	8	NILOSRING 6303 ZAV	
6	VF06215027	4	ROLLER	
7	VF16615203.86	4	CONTROL ARM	
8	VF16616460.86	1	SPROCKET	
9	VF16616480	8	TERMINAL RING	
10	VF16616481	4	CLIP	
11	VF16617225.86	1	GUIDE	
12	VF16617227	1	SHAFT, DRIVE	
13	VF16617244	17	SHEET	
14	VF16617910	4	INTERMEDIATE TUBE	
15	VF16618011.86	1	SPACER TUBE	
16	VF16618868.86	60	FEDERZINKEN PU 4 WIND. MP 122	
17	VF16618872	4	RAKE	
18	KG00353661	60	HEX. BOLT M8X60 8.8	
19	KG00355461	4	HEX. BOLT M10X50 8.8	
20	KG00474161	8	HEX. SCREW M10X22 8.8	
21	KG00474361	4	HEX. SCREW M10X30 8.8	
22	KG00641461	3	CARRIAGE BOLT M10X25 8.8	
23	KG01000161	16	FLANGED BOLT M6X12	
24	KG01068761	60	LOCK NUT M8 10	
25	KG01068861	12	LOCK NUT M10 10	
26	KG01107562	4	CIRCLIP-A 17 X 1	
27	KG01108862	2	CIRCLIP-A 30 X 1.5	
28	VGMT00310	3	SHIM SET	
29	VGND3030V	60	WASHER, PLAIN	
30	VGND3147V	4	RING	
31	VGND5120	3	CUSHION, ADJUSTABLE	
32	VGND5239	4	FLANGE, CUSHION	
33	VGND7002	1	KEY	
34	VGWA440	12	GUIDE	
35	VGWA649V	1	PLATE, FILLER	

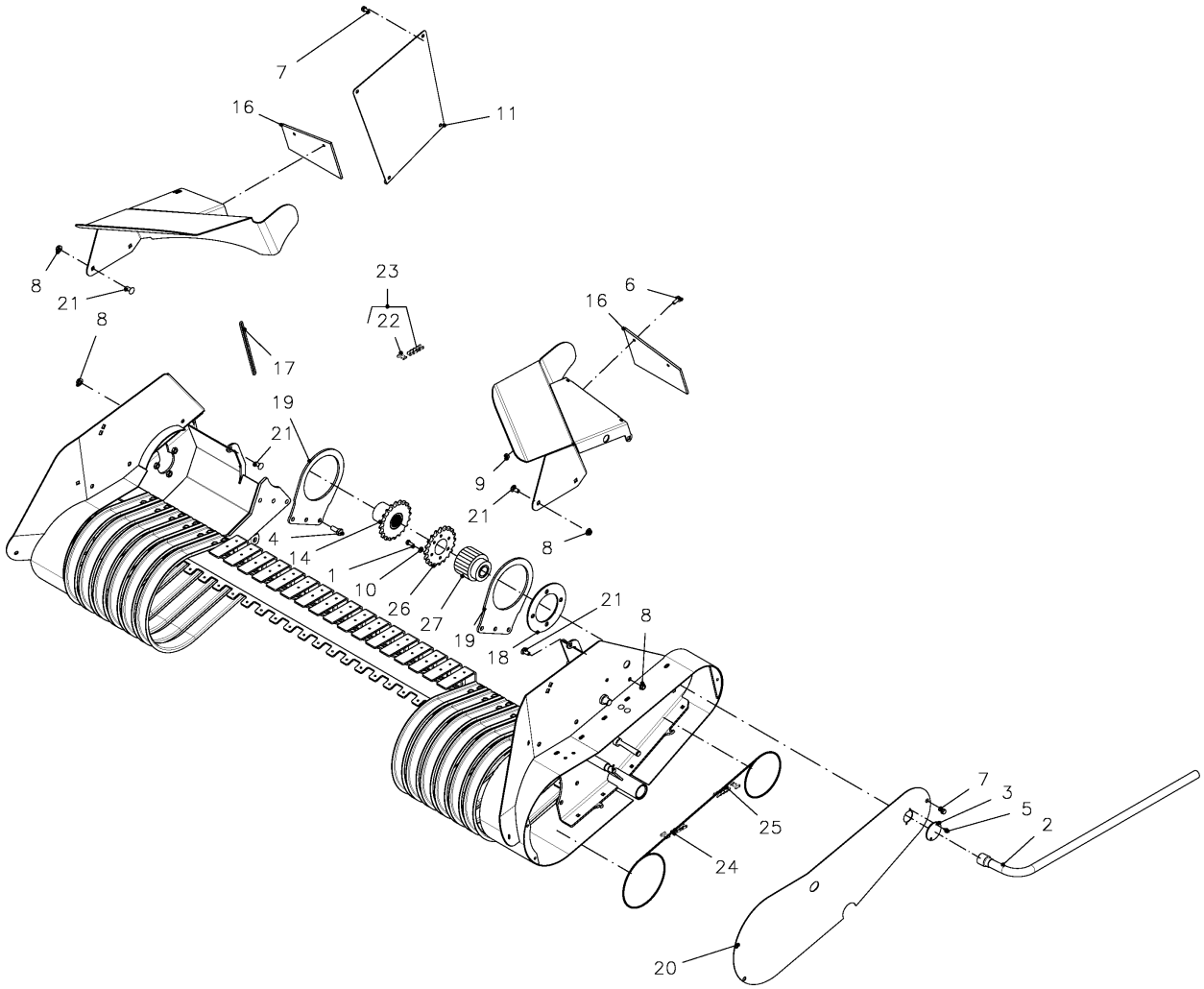

SPMVG000440

6490 / DRIVE (WPU)

PosNo.	Part No.	Qty.	Description	Remark
1	VF01173381	6	HEX.HEAD SCREW	
2	VGBR0755	1	SPANNER	
3	VGEP402V	1	LID	
4	KG00476561	6	HEX. SCREW M12X30 8.8	
5	KG00745463	2	TAPPING SCREW 6.3X13 4.8	
6	KG00981261	4	FLANGED BOLT M8X20 90	
7	KG01000661	5	FLANGED BOLT M8X15	
8	KG01061361	8	LOCK NUT M10 8	
9	KG01068761	4	LOCK NUT M8 10	
10	VGND3146V	6	RING	
11	VGRL517K0	1	GUARD, PROTECT.	
12	VGWA01177	1	GUIDE FOURRAGE LH	
13	VGWA01178	1	GUIDE FOURRAGE RH	
14	VGWA056	1	SPROCKET	
15	VGWA0887	1	FRAME, PICK-UP	
16	VGWA1249	2	SEAL	
17	VGWA1250	1	RUBBER	
18	VGWA54V	2	RING	
19	VGWA900	2	PLATE	
20	VGWA908	1	GUARD, PROTECT., LH	
21	VGXD296V	8	CARRIAGE BOLT	
22	VGND96086	1	LINK, DUPL.	
23	VG17654007	1	CHAIN, ROLLER, DUPLEX	
24	VGND96098	1	CHAIN, ROLLER, SIMPLEX	
25	VGND96107	1	CHAIN, ROLLER, SIMPLEX	
26	VG13813004	1	SPROCKET	
27	VGND94058	1	SLIP CLUTCH ASSY	

6490 / GAUGE WHEEL, PICK-UP (WPU)

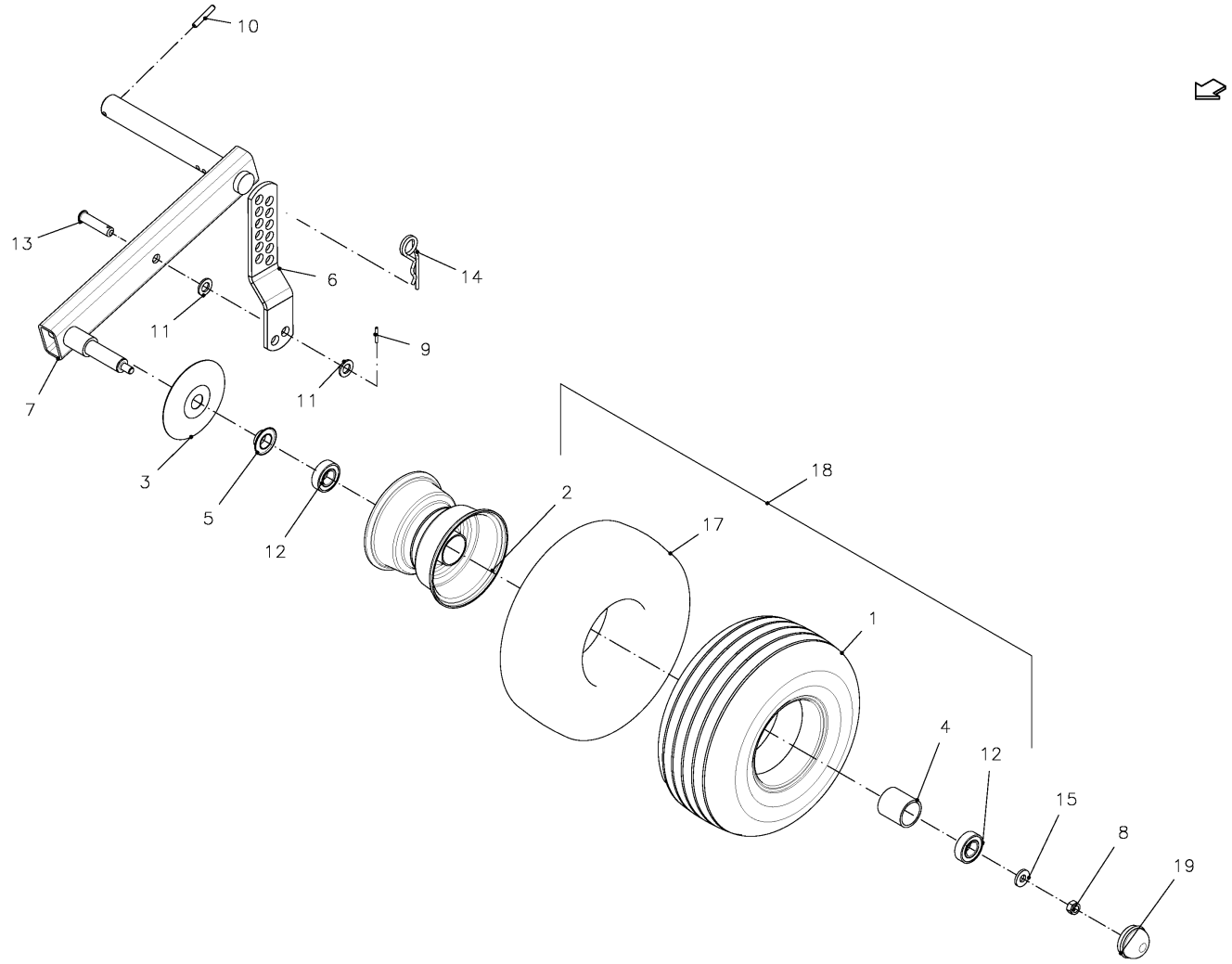

SPMVG000441

6490 / GAUGE WHEEL, PICK-UP (WPU)

PosNo.	Part No.	Qty.	Description	Remark
1	VF01141364	2	TYRE	
2	VF06564735.98	2	RIM	
3	VF16622598	2	PROTECTION CAP 25X62	
4	VF06249879	2	SPACER	
5	VF06567492	2	GASKET	
6	VF16514204.86	2	PERFORADED RAIL	
7	VF16618815.86	2	AXLE LINK	
8	KG01068961	2	LOCK NUT M12 10	
9	KG01186562	2	TENSION PIN 4X30	
10	KG01192062	2	TENSION PIN 8X50	
11	KG01267761	2	WASHER M16	
12	KG01378900	4	BALL BEARING 6205-2RS	
13	VGMT97V	2	PIN	
14	VGPZ160V	2	SPRING CLIP	
15	VGTH100V	2	RING	
17	VGND9779	2	AIR CHAMBER	
18	VF06564733	2	WHEEL	
19	VF06580546	2	CAP	

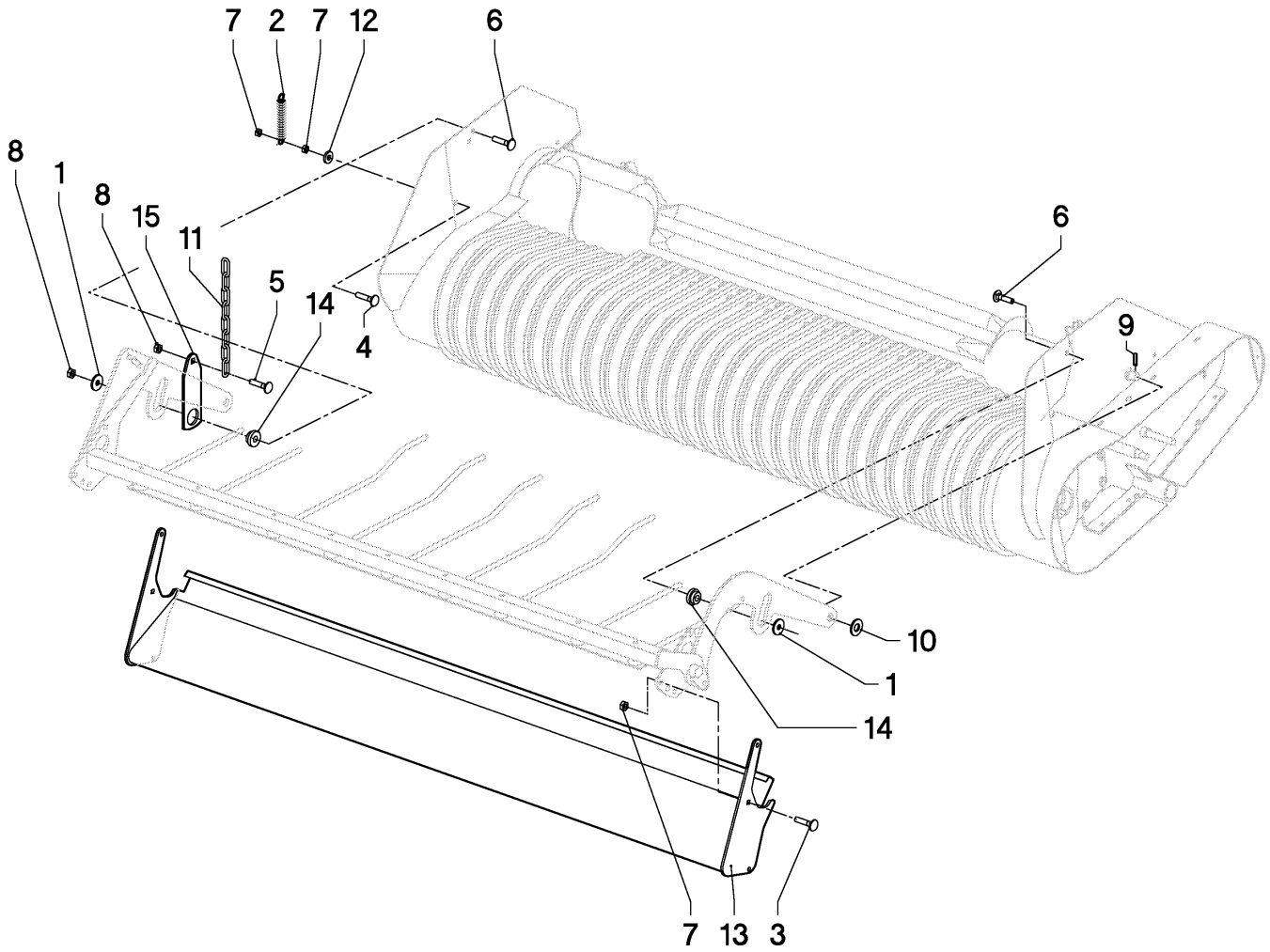

02RL01_32

6490 / PLATE, GUIDE (WPU)

PosNo.	Part No.	Qty.	Description	Remark
1	VG13925033V	2	RING	
2	VG18601321V	2	SPRING, TENSION	
3	KG00641461	4	CARRIAGE BOLT M10X25 8.8	
4	KG00641661	2	CARRIAGE BOLT M10X35 8.8	
5	KG00644761	2	CARRIAGE BOLT M12X25 8.8	
6	KG00645061	2	CARRIAGE BOLT M12X40 8.8	
7	KG01068861	8	LOCK NUT M10 10	
8	KG01068961	4	LOCK NUT M12 10	
9	KG01188162	2	TENSION PIN 5X36	
10	KG01267961	2	WASHER M20	
11	VGND98102V	2	CHAIN	
12	VGTH100V	2	RING	
13	VGWA0244	1	PLATE, GUIDE	
14	VGWA246	2	SLEEVE, CUSHION	
15	VGWA670	2	STRIP	

6490 / CROP GUIDE CPL. (WPU)

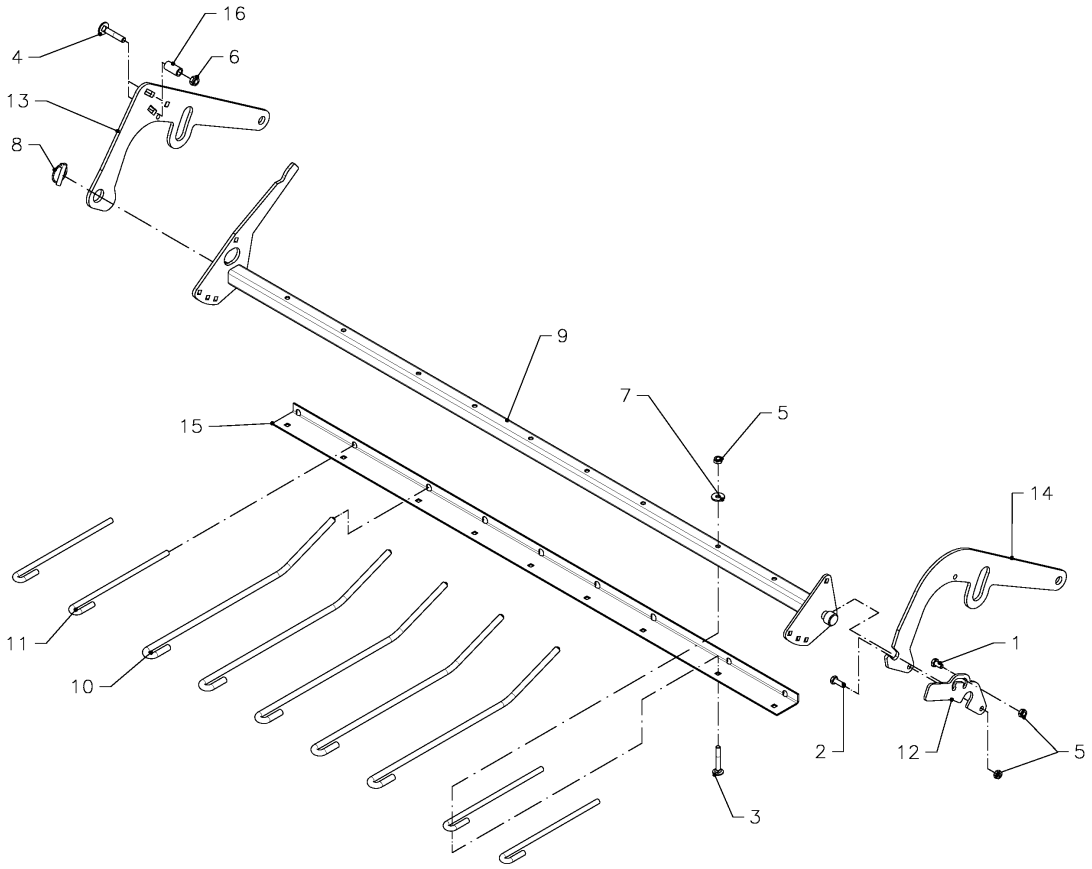

SPMVG000144

6490 / CROP GUIDE CPL. (WPU)

PosNo.	Part No.	Qty.	Description	Remark
1	KG00474061	1	HEX. SCREW M10X20 8.8	
2	KG00474361	1	HEX. SCREW M10X30 8.8	
3	KG00642361	9	CARRIAGE BOLT M10X70 8.8	
4	KG00645561	2	CARRIAGE BOLT M12X65 8.8	
5	KG01068861	11	LOCK NUT M10 10	
6	KG01068961	2	LOCK NUT M12 10	
7	VGMT152V	9	RING	
8	VGND9031V	1	FERGUSON BORGPEN 10	
9	VGWA0637	1	WIND GUARD	
10	VGWA1213V	5	TINE	
11	VGWA262V	4	TINE, SPRING	
12	VGWA568	1	LOCKING LEVER	
13	VGWA606	1	HOLDER, RH	
14	VGWA635	1	HOLDER, LH	
15	VGWA638	1	SUPPORT	
16	VGXD233V	2	BUSH	

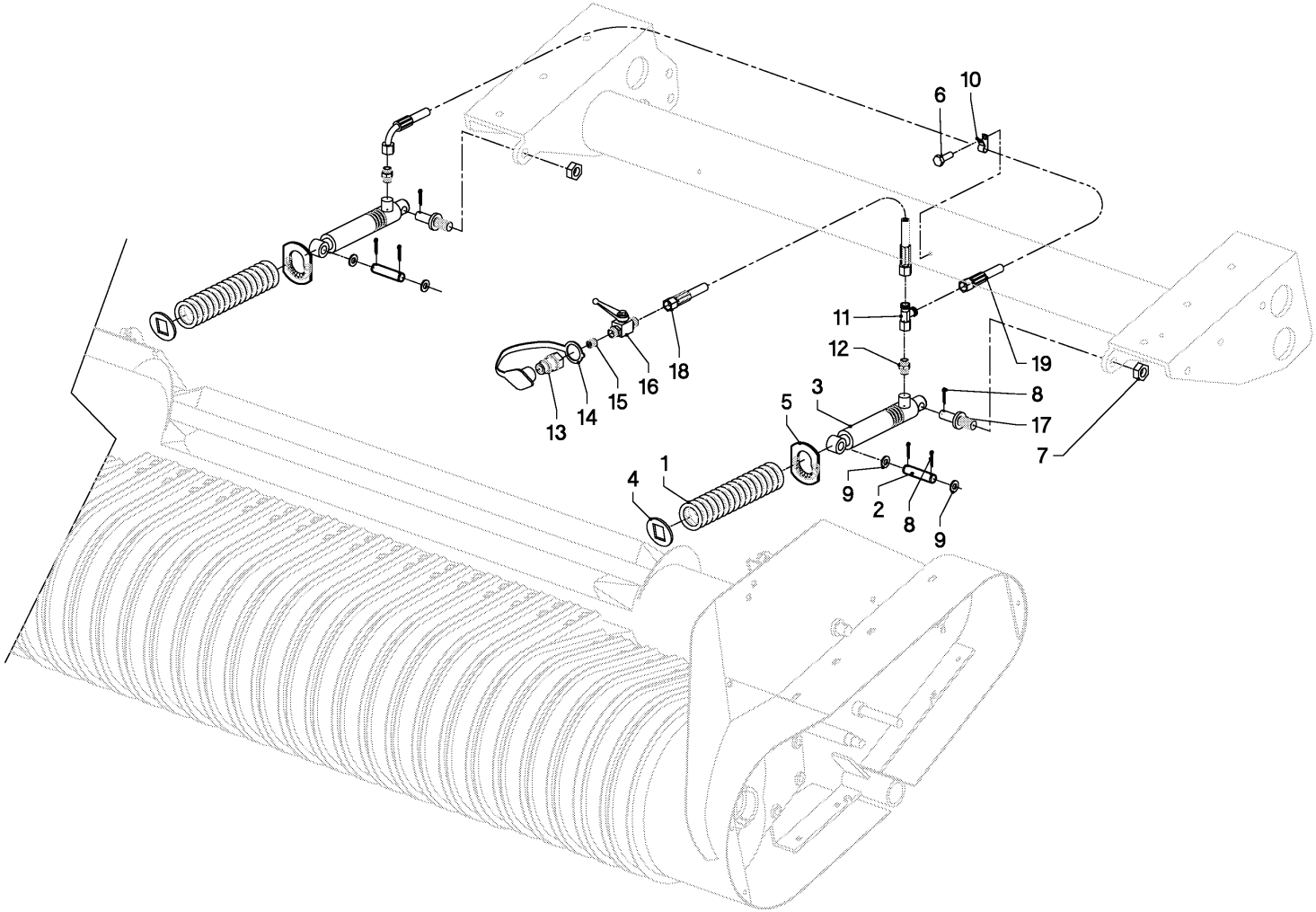

02RL01_34

6490 / CYLINDER, PICK-UP (WPU)

PosNo.	Part No.	Qty.	Description	Remark
1	VF06215425	2	COMPRESSION SPRING	
2	VF06576501	2	PIN	
3	VF16514629	2	CYLINDER, HYDR.	
4	VF16519184	2	WASHER/DISC/PLATE	
5	VF16618323	2	CLIP	
6	KG01000161	3	FLANGED BOLT M6X12	
7	KG01069161	2	LOCK NUT M16 10	
8	KG01251561	6	SPLIT PIN 4X25 ST	
9	KG01267761	4	WASHER M16	
10	VGND90033	3	CLAMP HOSE-	
11	VGND92032V	1	MALE STUD TEE STUD BARREL, ADJ	
12	VGND92114V	2	COUPLING	
13	VGTP00512	1	QUICK-DISCONNECT PLUG, MALE	
14	VGND9607	1	COVER, DUST	
15	VGTP438	1	THROTTLE, SCREW	
16	VGWA00659	1	VALVE, SHUT-OFF	
17	VGWA183V	2	PIN	
18	VGWA548	1	HOSE, HP	
19	VGWA549	1	HOSE, HP	

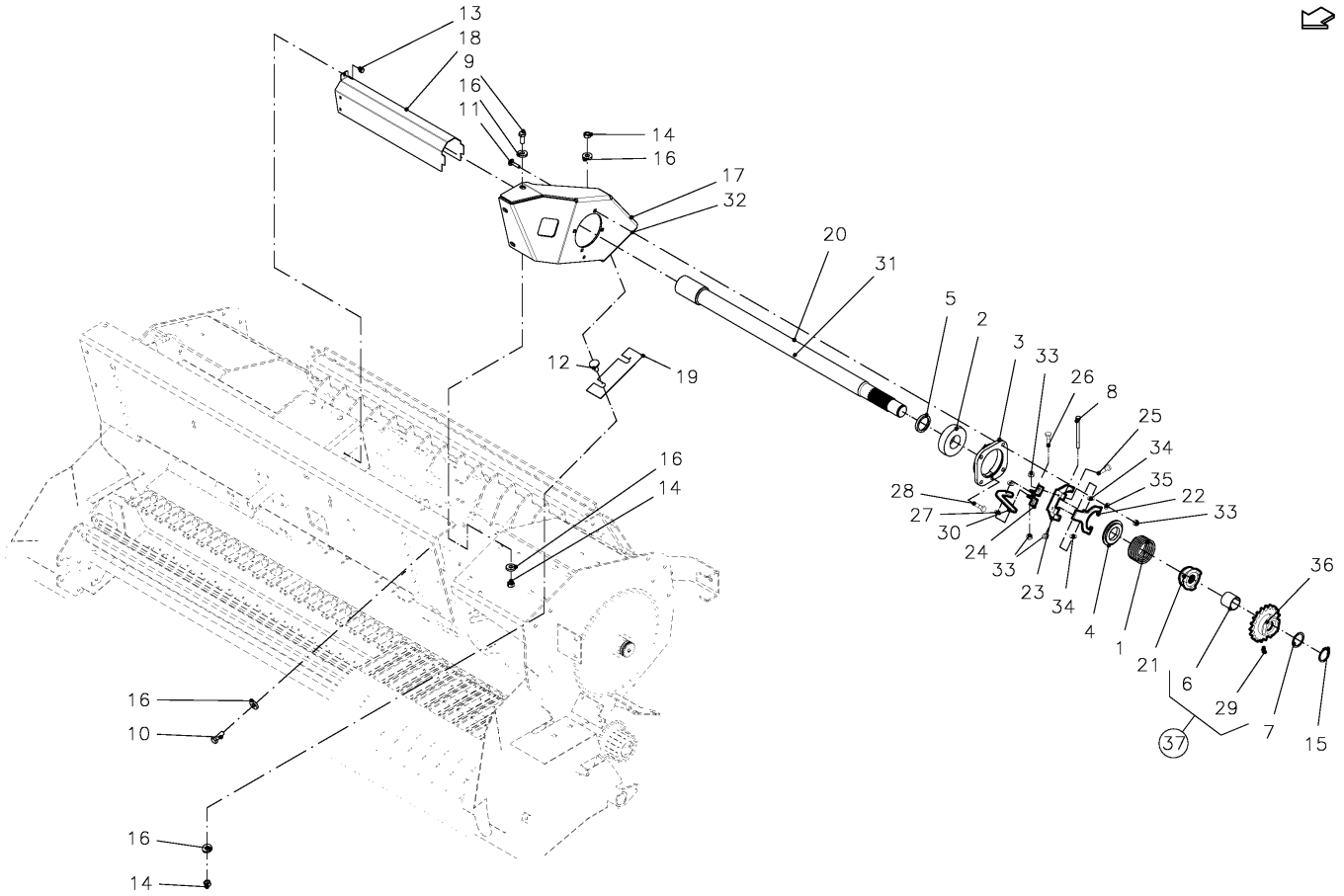

SPMVG000407

6490 / DRIVE (R+14-OC +XL-R+OC23)

PosNo.	Part No.	Qty.	Description	Remark
1	VF06215408	1	COMPRESSION SPRING	
2	VF16614109	1	CUSHION, ADJUSTABLE	
3	VF16614253.86	1	BEARING RACE	
4	VF16614279	1	WASHER	
5	VF16616328	1	BEARING RACE	XL-R + 23-OC
6	VF16618198	1	BUSH	
7	VGAH00132	1	SHIM SET	GIVE QUANTITY WHEN ORDERING
8	KG00354361	1	HEX. BOLT M8X110 8.8	
9	KG00476561	1	HEX. SCREW M12X30 8.8	
10	KG00476661	2	HEX. SCREW M12X35 8.8	
11	KG00639361	4	CARRIAGE BOLT M8X35 8.8	
12	KG00644861	2	CARRIAGE BOLT M12X30 8.8	
13	KG01000661	1	FLANGED BOLT M8X15	
14	KG01052161	5	HEX. NUT M12 8	
15	KG01109862	1	CIRCLIP-A 40 X 1.75	
16	VGND3148V	8	CIRCLIP	
17	VGWA02076K0	1	SUPPORT	R + OC-14
18	VGWA490	1	GUARD, PROTECT.	
19	VGWA904V	1	PLATE, SHIM	
20	VGWS0183	1	SHAFT, DRIVE	XL-R + 23-OC
21	VF16614276.86	1	SLIDING DOG	
22	VF16615219.86	1	LEVER	
23	VF16615220.86	1	ANGLE	
24	VF16615236.86	1	BEARING	
25	KG00353161	2	HEX. BOLT M8X35 8.8	
26	KG00472461	1	HEX. SCREW M8X40 8.8	
27	VGMH416V	2	RING	
28	VF16616404	1	GREASE NIPPLE	
29	VGND9813V	2	GREASE NIPPLE	
30	VGWS134	1	HANDLE	
31	VGWS060	1	SHAFT, DRIVE	R + OC-14
32	VGRL0502K0	1	SUPPORT	XL-R + 23-OC
33	KG01068761	8	LOCK NUT M8 10	
34	VGND3146V	2	RING	
35	KG01267361	1	WASHER M8	
36	VF16619984	1	CHAIN WHEEL	XL-R + 23-OC
37	VGWS00149	1	SPROCKET ASSY	R + OC-14

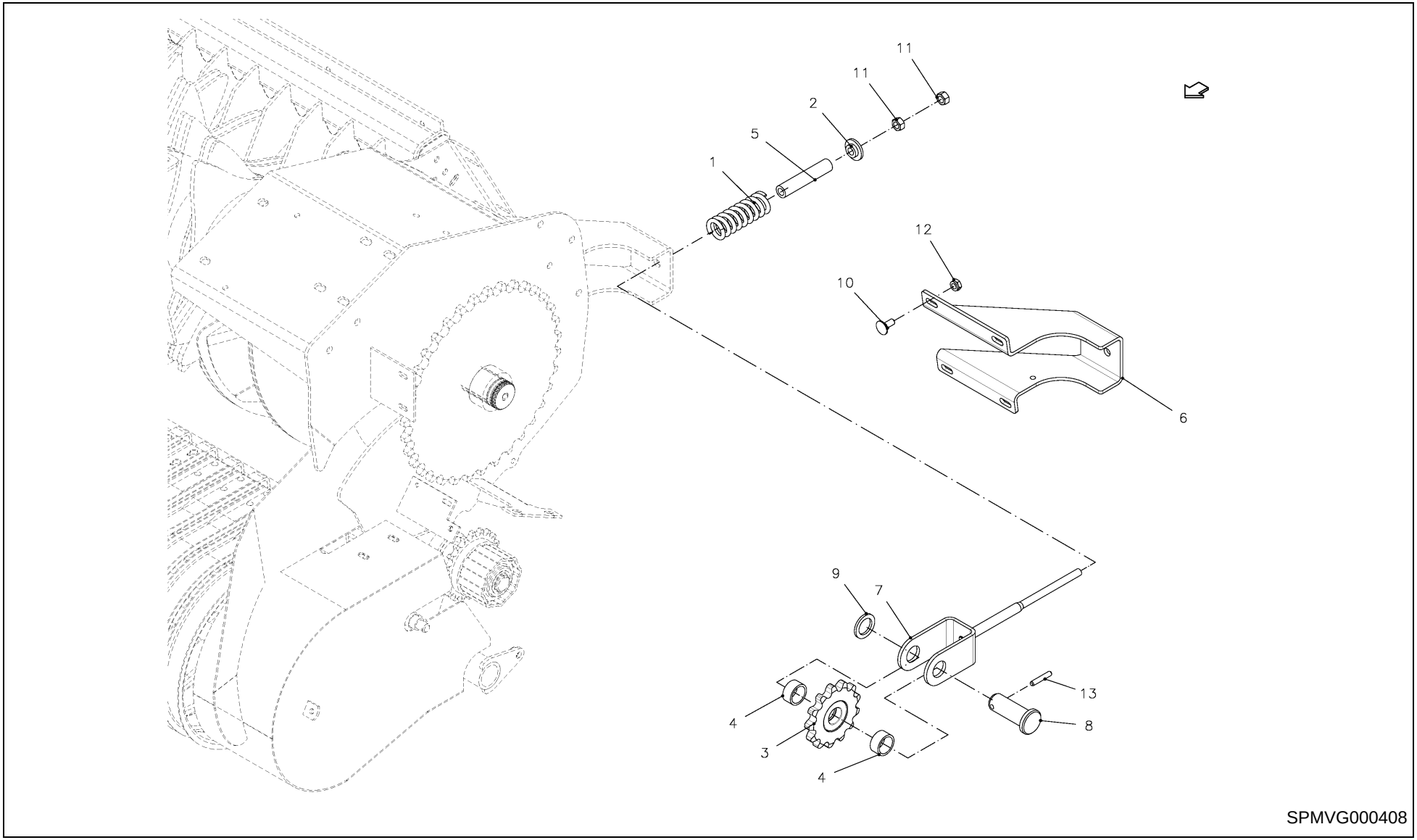
11
11
2
5
1
12
10
6
9
7
13
4
8
3
4
SPMVG000408

6490 / TENSIONER, CHAIN (R+OC-14)

PosNo.	Part No.	Qty.	Description	Remark
1	VF06215432	1	COMPRESSION SPRING	
2	VF06550817	1	SPRING CUP	
3	VF06554382.86	1	CHAIN WHEEL	
4	VF16614124	2	SPACER TUBE	
5	VF16619185	1	PIPE/TUBE	
6	VF16653138	1	SUPPORT	
7	VF16614227.86	1	TENSIONER CHAIN	
8	VF16654530	1	PIN	
9	VGDS59V	1	RING	
10	KG00641461	4	CARRIAGE BOLT M10X25 8.8	
11	KG01052161	2	HEX. NUT M12 8	
12	KG01068861	4	LOCK NUT M10 10	
13	KG01191962	1	TENSION PIN 8X45	

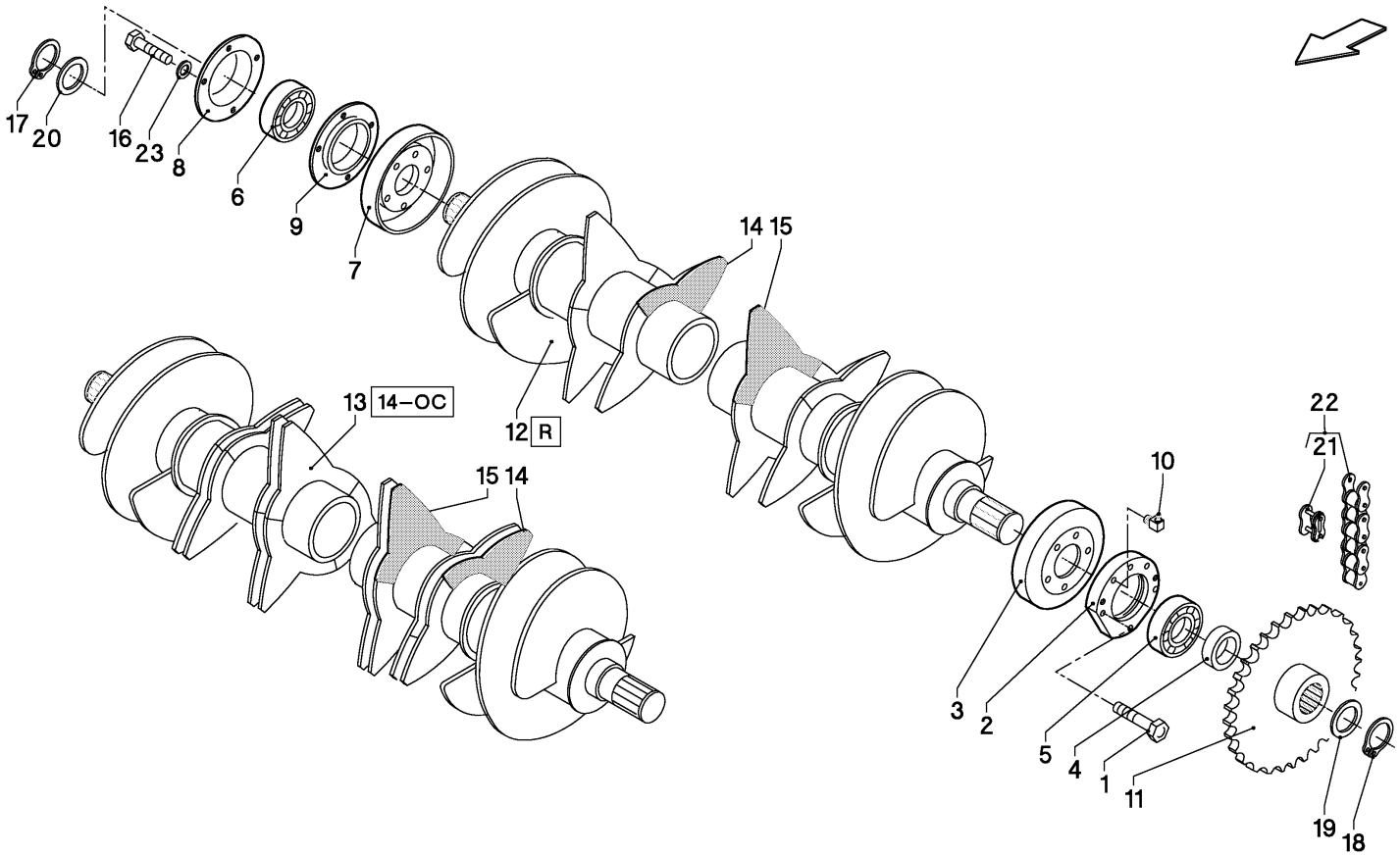

02RL01_36

6490 / ROTOR (R + 14-OC)

PosNo.	Part No.	Qty.	Description	Remark
1	VF06209240	8	BOLT, NUTTED	
2	VF16613954.86	1	SUPPORT RIGHT	
3	VF16613956.86	1	ANTI WRAPPING DEVICE	
4	VF16614025	2	SPACER RING	
5	VF16614126	1	BALL BEARING	
6	VF16614169	1	BALL BEARING	
7	VF16615109	1	ANTI WRAPPING DEVICE	
8	VF16615114	1	HALF HOUSING	
9	VF16615117	1	HALF HOUSING	
10	VF16616404	1	GREASE NIPPLE	
11	VF16616797.86	1	SPROCKET	
12	VF16618150	1	ROLLER, SMOOTH	R
13	VF16619420	1	TINE ROLLER	14-OC
14	VF16611577	1	TINE	
15	VF16616807	1	TINE	
16	KG00476561	10	HEX. SCREW M12X30 8.8	
17	KG01109862	1	CIRCLIP-A 40 X 1.75	
18	KG01110462	1	CIRCLIP-A 50 X 2	
19	VGMT0063		SHIM SET	GIVE QUANTITY WHEN ORDERING
20	VGND3126	1	RING	
21	VGND9295	1	LINK, SIMPL.	
22	VGND96133	1	CHAIN, ROLLER, SIMPLEX	
23	VGTH100V	4	RING	

6490 / GAUGE WHEEL, PICK-UP (R+14-OC + XLR +23-OC)

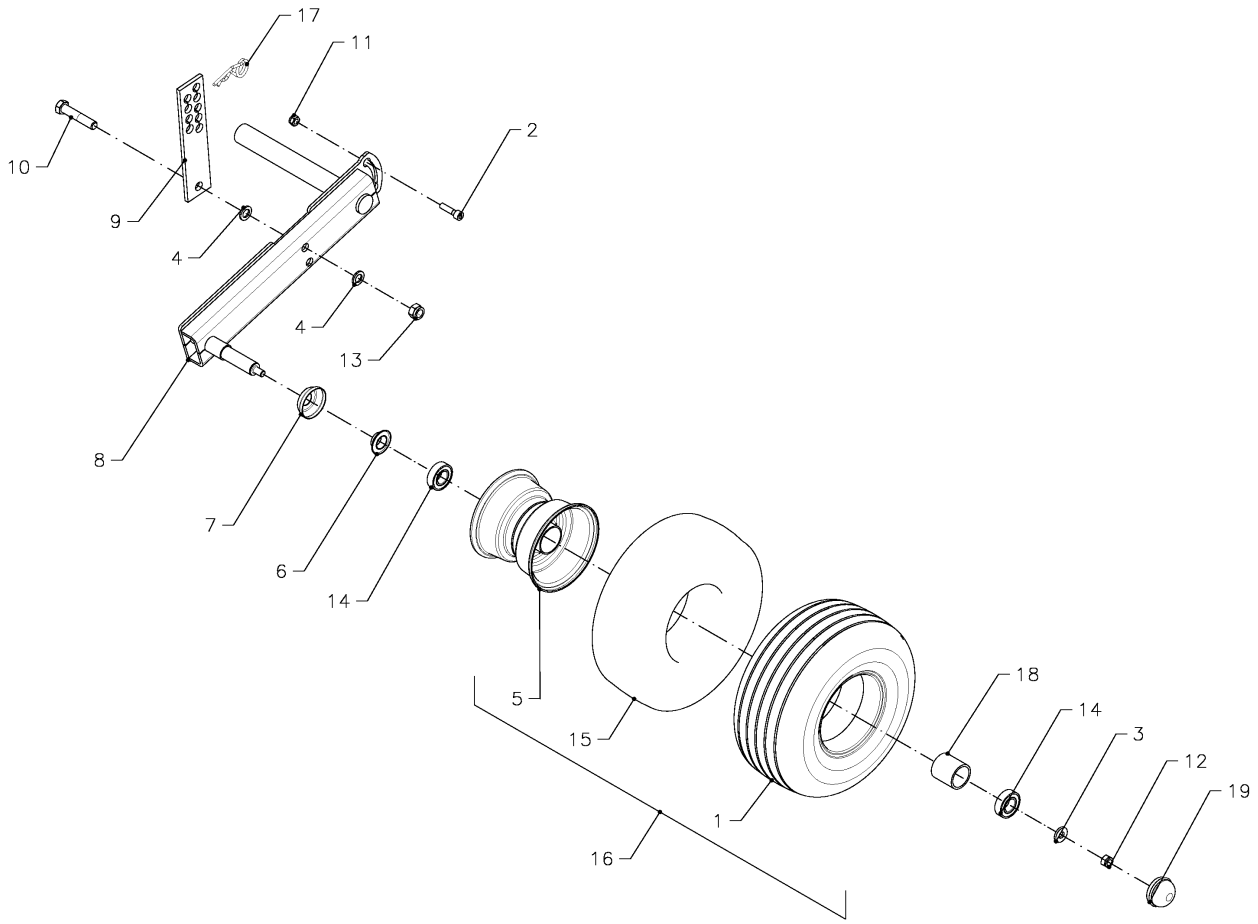

SPMVG000153

6490 / GAUGE WHEEL, PICK-UP (R+14-OC + XLR +23-OC)

PosNo.	Part No.	Qty.	Description	Remark
1	VF01141364	2	TYRE	
2	VF01397983	2	CHEESE-HEAD SCREW	
3	VGTH100V	2	RING	
4	KG01267761	4	WASHER M16	
5	VF06564735.98	2	RIM	
6	VF06567492	2	GASKET	
7	VF16622598	2	PROTECTION CAP 25X62	
8	VF16652374.86	2	AXLE LINK	
9	VF16652392.86	2	PERFORADED RAIL	
10	KG00362661	2	HEX. BOLT M16X90 8.8	
11	KG01068861	2	LOCK NUT M10 10	
12	KG01068961	2	LOCK NUT M12 10	
13	KG01069161	2	LOCK NUT M16 10	
14	KG01476400	2	BALL BEARING 6205-2RS C3	
15	VGND9779	2	AIR CHAMBER	
16	VF06564733	2	WHEEL	
17	VGPZ160V	2	SPRING CLIP	
18	VF06249879	2	SPACER	
19	VF06580546	2	CAP	

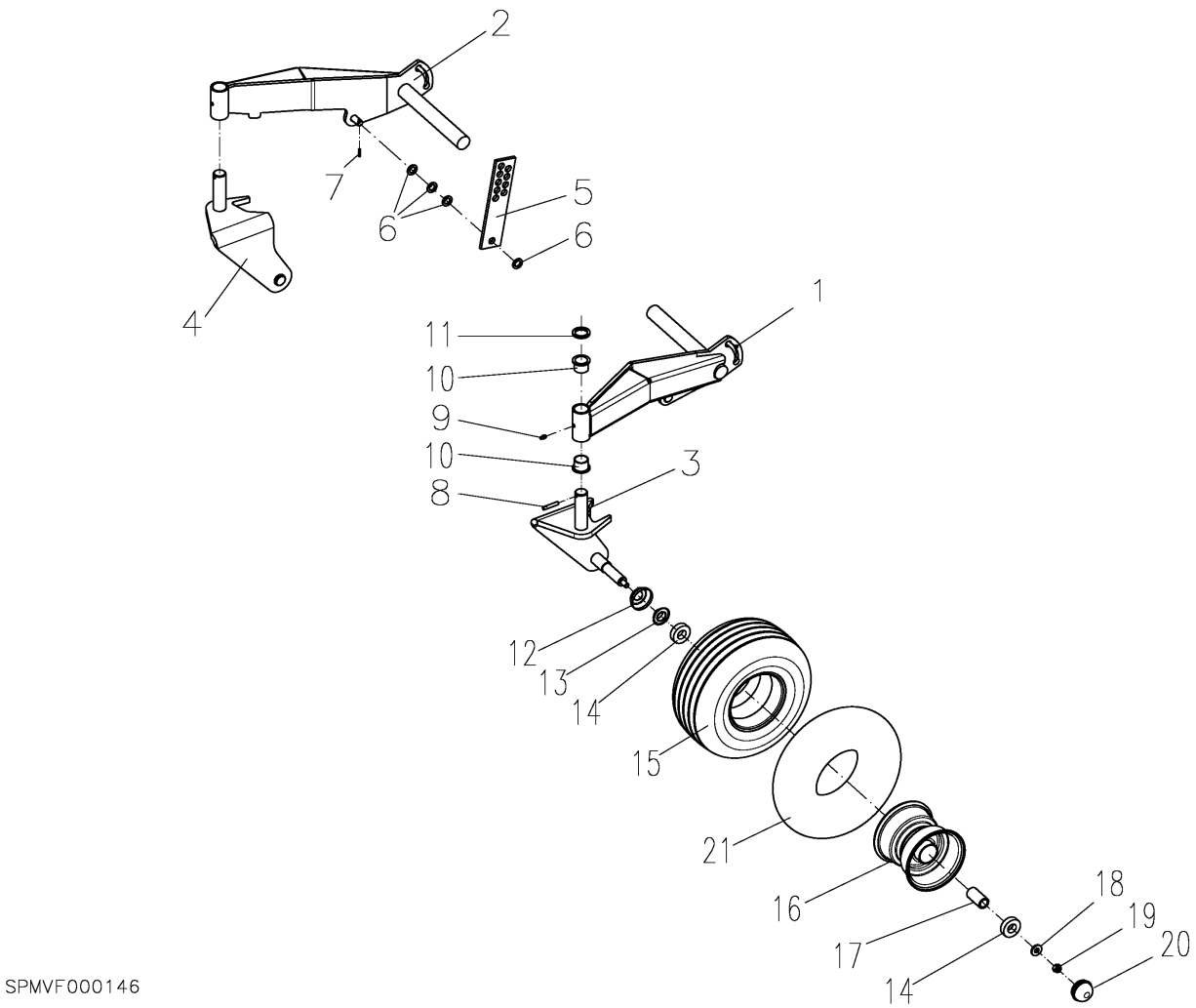
2
K11
7
5
6
6
4
1
11
10
9
10
3
8
12
13
14
15
21
16
18
19
20
17
14
SPMVF000146

0802RL-49

6490 / GAUGE WHEEL, PICK-UP, CPL.

PosNo.	Part No.	Qty.	Description	Remark
1	VF16654682.86	1	AXLE LINK LEFT	
2	VF16654683.86	1	AXLE LINK RIGHT	
3	VF16654690.86	1	WHEEL AXLE LEFT	
4	VF16654691.86	1	WHEEL AXLE RIGHT	
5	VF16652392.86	2	PERFORADED RAIL	
6	KG01267761	8	WASHER M16	
7	KG01187662	2	TENSION PIN 5X24	
8	KG01191962	2	TENSION PIN 8X45	
9	VGND9813V	2	GREASE NIPPLE	
10	VF06229502	4	BUSH	
11	VF06214421	2	WASHER	
12	VF16622598	2	PROTECTION CAP 25X62	
13	VF06567492	2	GASKET	
14	KG01379500	4	ALL BEARING 6205-RS	
15	VF01141364	2	TYRE	
16	VF06564735.98	2	RIM	
17	VF06249879	2	SPACER	
18	VGTH100V	2	RING	
19	KG01068961	2	LOCK NUT M12 10	
20	VF06580546	2	CAP	
21	VGND9779	2	AIR CHAMBER	

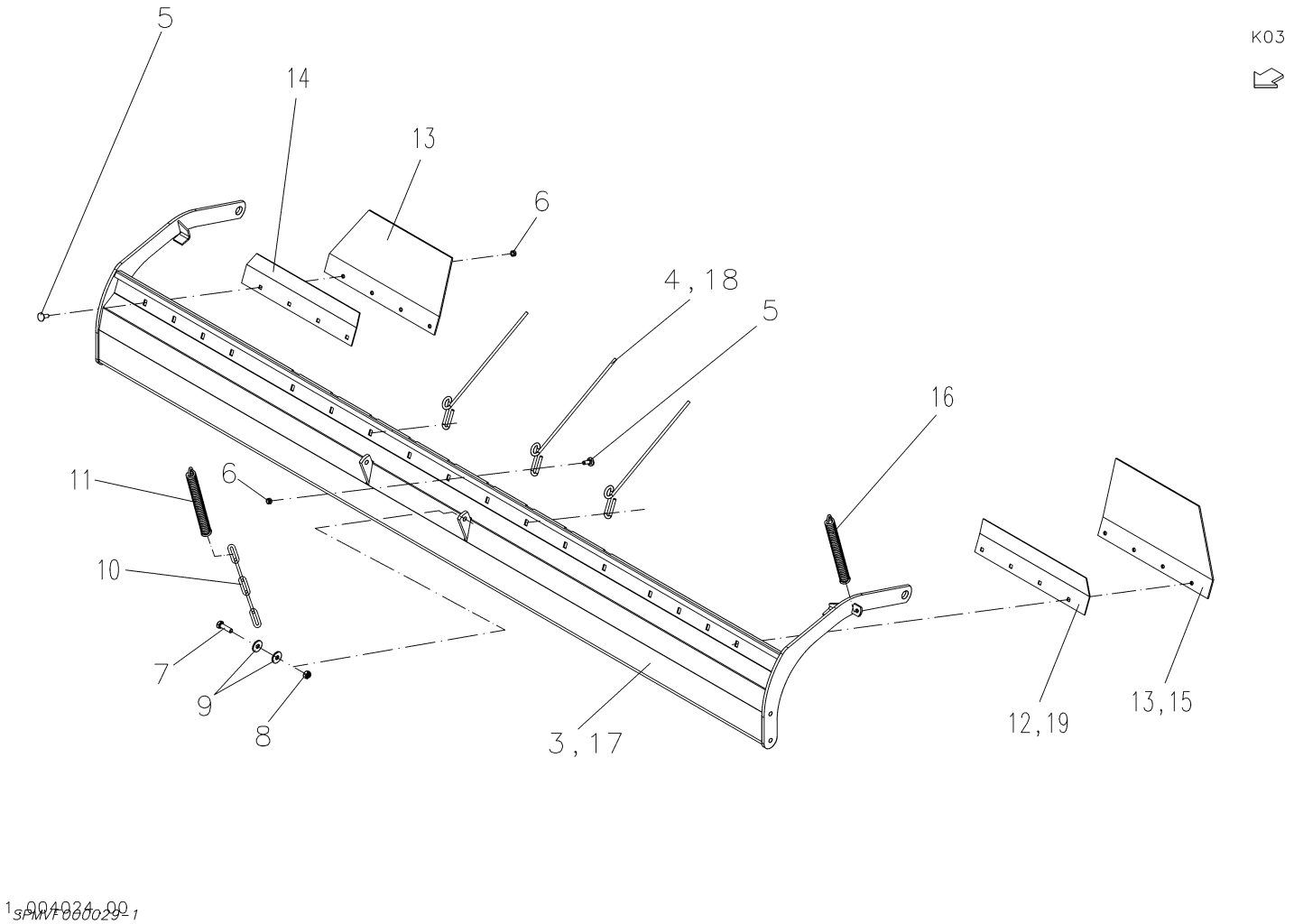

SPMVF000029

6490 / CROP GUIDE CPL. (R+14-OC + XL-R + 23-OC)

PosNo.	Part No.	Qty.	Description	Remark
3	VF16654389.86	1	DEFLECTOR PLATE	
4	VF16514266	3	SPRING TINE	
5	KG00639061	12	CARRIAGE BOLT M8X20 8.8	
6	VF01397863	12	HEX.NUT	
7	KG00474461	2	HEX. SCREW M10X35 8.8	
8	KG01068861	2	LOCK NUT M10 10	
9	VGMT152V	4	RING	
10	VF01397910	2	CHAIN/TRACK	
11	VGPZ365V	2	SPRING, TENSION	
12	VF16517258.86	1	BAFFLE LEFT	
13	VF16517301	1	TAPE/STRAP/ RIGHT	
14	VF16517302.86	1	BAFFLE RIGHT	
15	VF16517257	1	TAPE/STRAP/BAND LEFT	
16	VF01141494	1	TENSION SRING	
17	VF16652199.86	1	BAFFLE PLATE	OC 23 + XL-R
18	VF16618436	3	SPRING TINE	OC 23 + XL-R
19	VF16619481.86	1	BAFFLE	OC 23 + XL-R

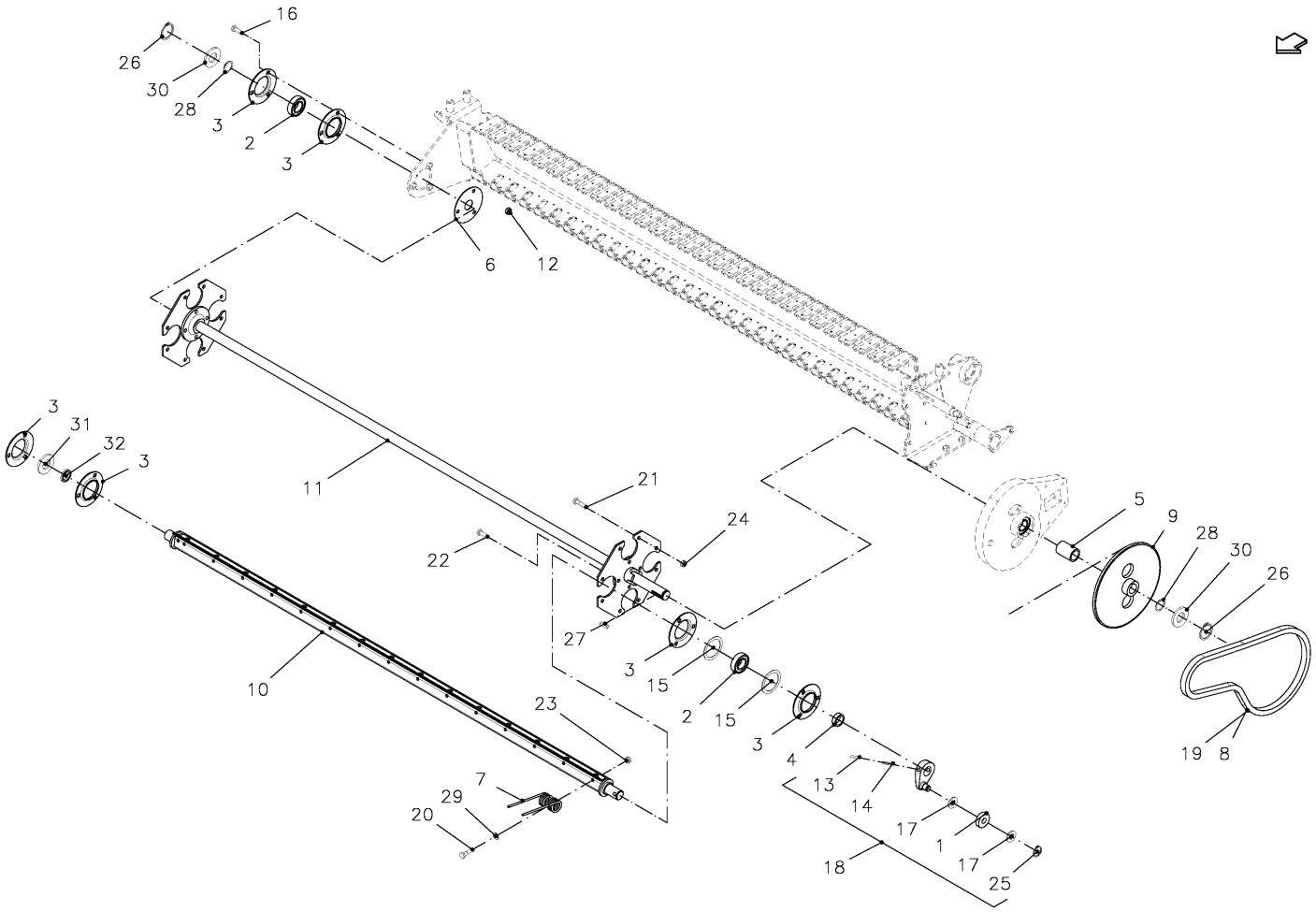

SPMVG000155

6490 / PICK-UP, CPL. (R+14-OC)

PosNo.	Part No.	Qty.	Description	Remark
1	VF06215027	4	ROLLER	
2	VF06215766	5	ROLLER BEARING	
3	VF06215783	18	HOUSING, FLANGED	
4	VF16617910	4	INTERMEDIATE TUBE	
5	VF16618011.86	1	SPACER TUBE	
6	VF16618811.86	1	WASHER	
7	VF16618868.86	60	FEDERZINKEN PU 4 WIND. MP 122	
8	VF16618449	1	CHAIN	
9	VF16619858.86	1	SPROCKET	
10	VF16654387.86	4	TUBE	
11	VF16654388.86	1	DRIVE SHAFT	
12	KG01043261	3	HEX. NUT M10 8	
13	KG01190062	4	TENSION PIN 6X70	
14	VG61.05.04	4	PIN, TENSION	
15	VF01170940	8	NILOS-RING	
16	VF01177466	3	HEX.BOLT	
17	VF06214938	8	NILOSRING 6303 ZAV	
18	VF16615203.86	4	CONTROL ARM	
19	VGND9346	1	LINK, SIMPL.	
20	KG00353661	60	HEX. BOLT M8X60 8.8	
21	KG00474261	8	HEX. SCREW M10X25 8.8	
22	KG00474361	4	HEX. SCREW M10X30 8.8	
23	KG01061261	60	LOCK NUT M8 8	
24	KG01068861	12	LOCK NUT M10 10	
25	KG01107562	4	CIRCLIP-A 17 X 1	
26	KG01108862	2	CIRCLIP-A 30 X 1.5	
27	KG01306900	1	KEY 8X7X32	
28	VGMT00310	2	SHIM SET	GIVE QUANTITY WHEN ORDERING
29	KG01273561	60	WASHER M8	
30	VGND3138V	2	RING	
31	VF16655023	4	WASHER	
32	VF16655049	4	TIGHTENING BEARING DIN 626 RAE 30 NPPB	

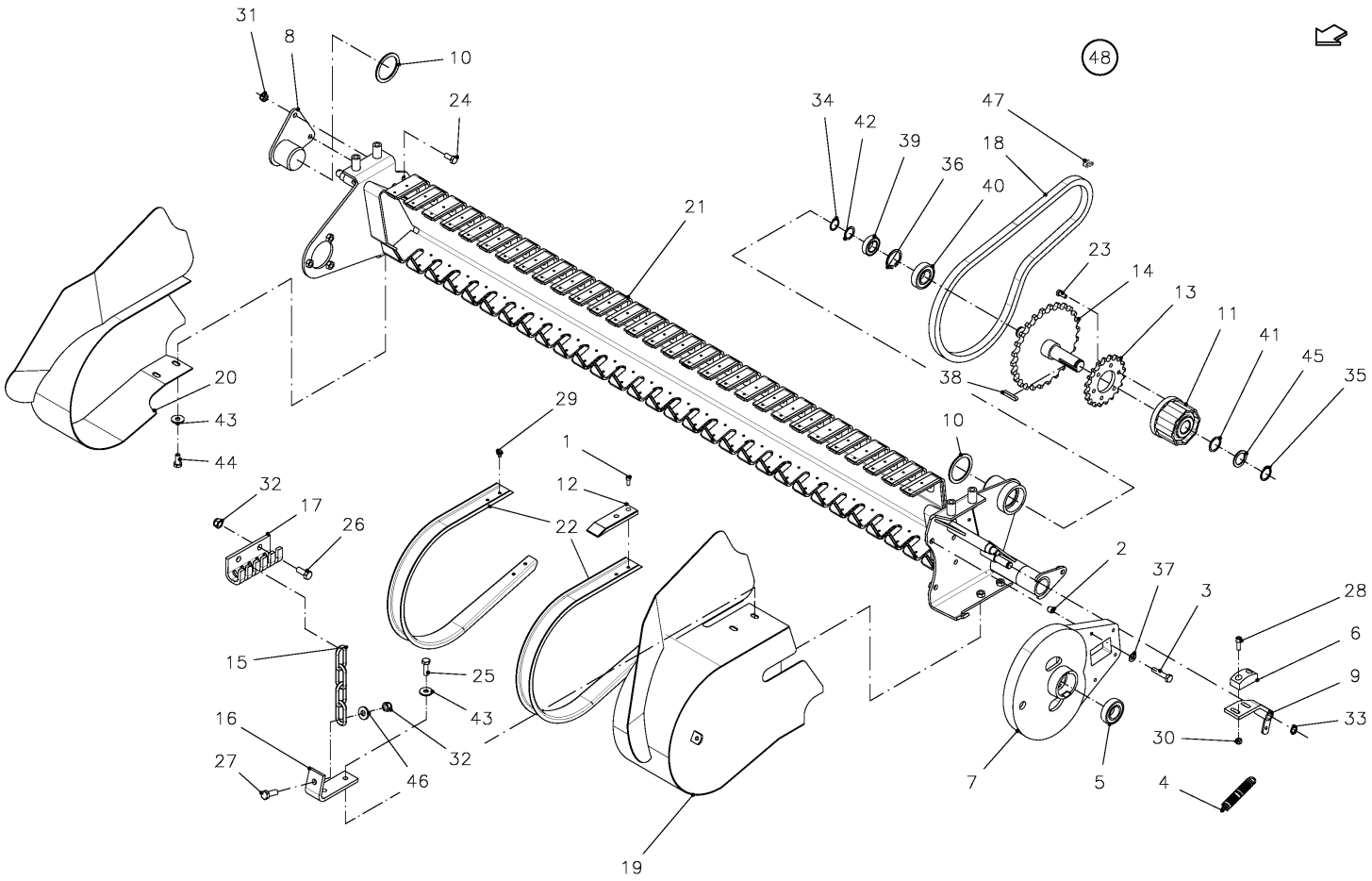

SPMVG000156

6490 / FRAME, PICK-UP (R+14-OC)

PosNo.	Part No.	Qty.	Description	Remark
1	VF01104181	20	CYLINDR. SCREW	
2	VF01157427	2	DOWEL PIN	
3	VF06209483	4	HEX.HEAD SCREW	
4	VF06215540	1	TENSION SPRING	
5	VF06215766	1	ROLLER BEARING	
6	VF06246785	1	BLOC	
7	VF16617225.86	1	GUIDE	
8	VF16616475	1	PIVOT PIN	
9	VF16617204.86	1	TENSIONER CHAIN	
10	VF16617206	2	SHIM	
11	VF16617905.86	1	CLUTCH	
12	VF16618012	10	PLASTIC SEGMENT	
13	VF16618017.86	1	SPROCKET	
14	VF16618729.86	1	SPROCKET	
15	VF16618864	2	CHAIN/TRACK	
16	VF16618876	2	FIXING ANGLE	
17	VF16618891	2	SUPPORT	
18	VF16619824	1	CHAIN	
19	VF16651180.86	1	SIDE PART LEFT	
20	VF16651190.86	1	SIDE PART RIGHT	
21	VF16654305.86	1	SUPPORT	
22	VF16655994	29	STREIFBLECH	
23	KG00471961	6	HEX. SCREW M8X20 8.8	
24	KG00474261	2	HEX. SCREW M10X25 8.8	
25	KG00474461	4	HEX. SCREW M10X35 8.8	
26	KG00476561	4	HEX. SCREW M12X30 8.8	
27	KG00476661	2	HEX. SCREW M12X35 8.8	
28	KG00545161	2	CHEESE HEAD SCREW M8X25 8.8	
29	KG00980461	96	FLANGED BOLT M6X10 90	
30	KG01068761	2	LOCK NUT M8 10	
31	KG01068861	2	LOCK NUT M10 10	
32	KG01068961	6	LOCK NUT M12 10	
33	KG01107462	1	CIRCLIP-A 16 X 1	
34	KG01108362	1	CIRCLIP-A 25 X 1.2	
35	KG01108862	1	CIRCLIP-A 30 X 1.5	
36	KG01128700	1	CIRCLIP-B 47 X 1.75	
37	KG01267461	4	WASHER M10	
38	KG01307200	1	KEY 8X7X45	
39	KG01356100	1	BALL BEARING 6005-2RS	
40	KG01380000	1	BALL BEARING 6206-2RS	

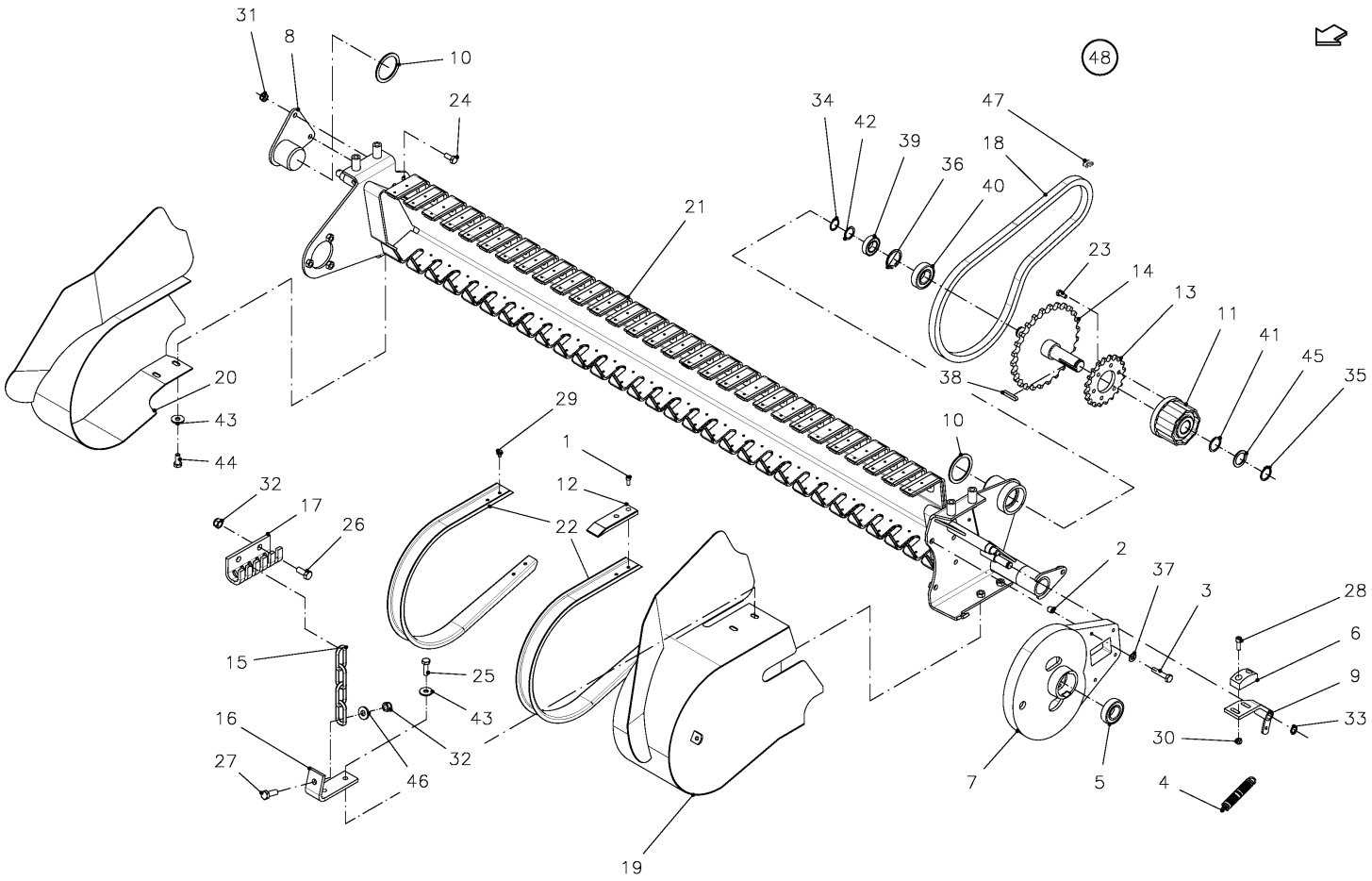

SPMVG000156

6490 / FRAME, PICK-UP (R+14-OC)

PosNo.	Part No.	Qty.	Description	Remark
41	VGMT00310	1	SHIM SET	
42	VGMT0062	1	SHIM SET	
43	VGMT152V	8	RING	
44	VGND1481V	4	BOLT, LOCK, SPEC.	
45	VGND3138V	1	RING	
46	VGTH100V	2	RING	
47	VGND9346	1	LINK, SIMPL.	
48	VF16653600	1	PU OC14 MONT.	

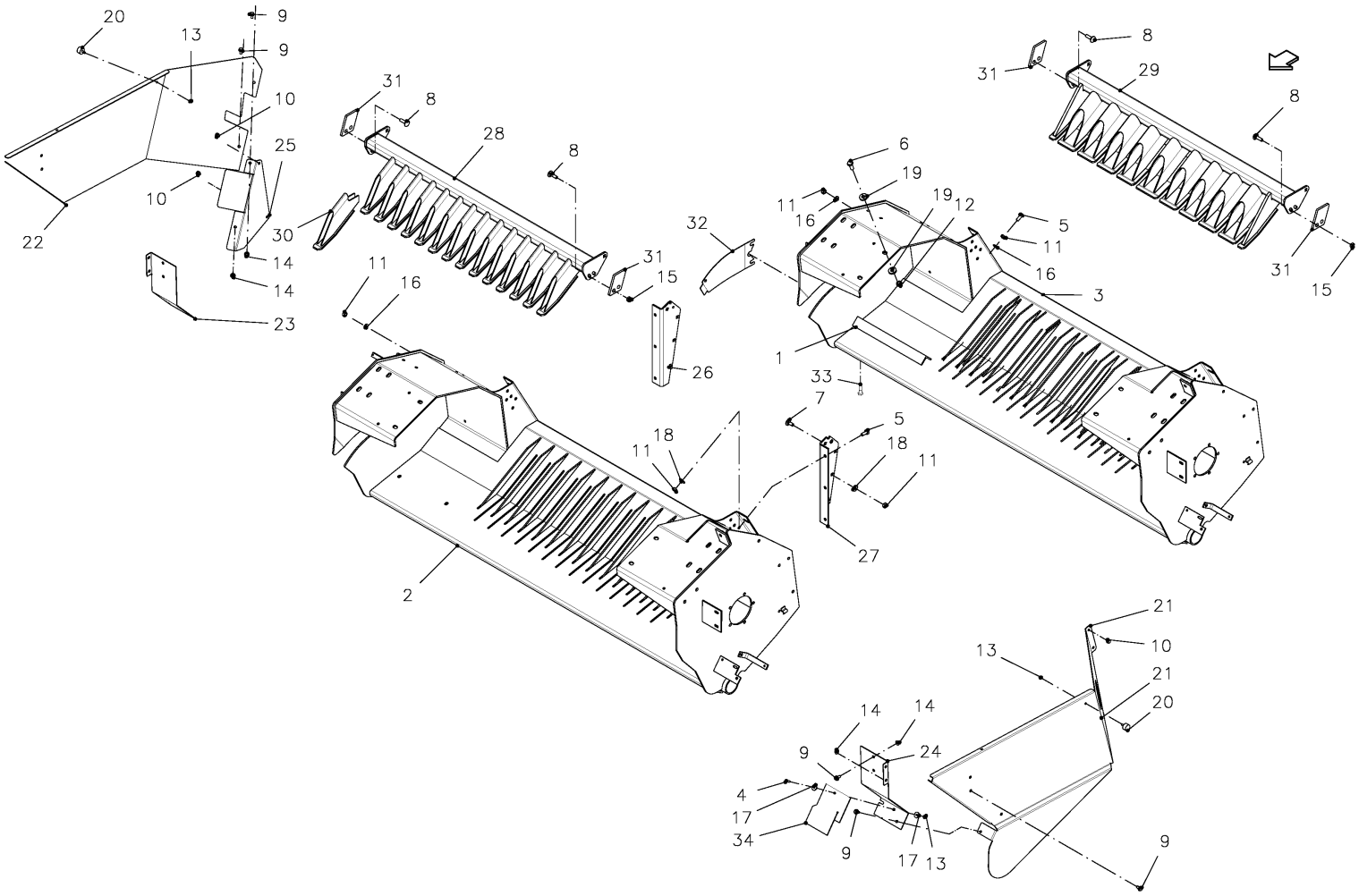

SPMVG000443

6490 / FRAME (R + 14-OC)

PosNo.	Part No.	Qty.	Description	Remark
1	VF16617478	2	SCRAPER/WIPER	
2	VF16653020	1	FRAME, CUTTING	OC-14
3	VF16653180	1	FRAME, INTAKE ROTOR	R
4	KG00468961	2	HEX. SCREW M6X20 8.8	
5	KG00474261	12	HEX. SCREW M10X25 8.8	
6	KG00476561	4	HEX. SCREW M12X30 8.8	
7	KG00641461	6	CARRIAGE BOLT M10X25 8.8	
8	KG00641661	6	CARRIAGE BOLT M10X35 8.8	
9	KG00981161	11	FLANGED BOLT M8X16 90	
10	KG01000661	4	FLANGED BOLT M8X15	
11	KG01052061	24	HEX. NUT M10 8	
12	KG01052161	6	HEX. NUT M12 8	
13	KG01061161	4	LOCK NUT M6 8	
14	KG01061261	10	LOCK NUT M8 8	
15	KG01068861	4	LOCK NUT M10 10	
16	KG01267461	10	WASHER M10	
17	VGND3034V	4	WASHER, PLAIN	
18	VGND3147V	14	RING	
19	VGND3148V	12	CIRCLIP	
20	VGND90007	2	DAMPER VIBRATION	
21	VGRL399K0	1	GUARD, PROTECT., LH	
22	VGRL400K0	1	GUARD, PROTECT., RH	
23	VGRL406K0	1	PLATE, RH	
24	VGRL435K0	1	PLATE, LH	
25	VGRL567K0	1	PLATE	
26	VGWA1600	1	PLATE, RH	
27	VGWA2145K0	1	PLATE, LH	
28	VGWS0137	1	FRAME	OC-14
29	VGWS0145	1	FRAME	R
30	VGWS0177	1	WELDING PART	
31	VGWS142	2	STRIP	
32	VGWS147	1	PLATE	
33	VF06209465	4	HEX.HEAD SCREW	
34	VGWS146	1	SEAL	

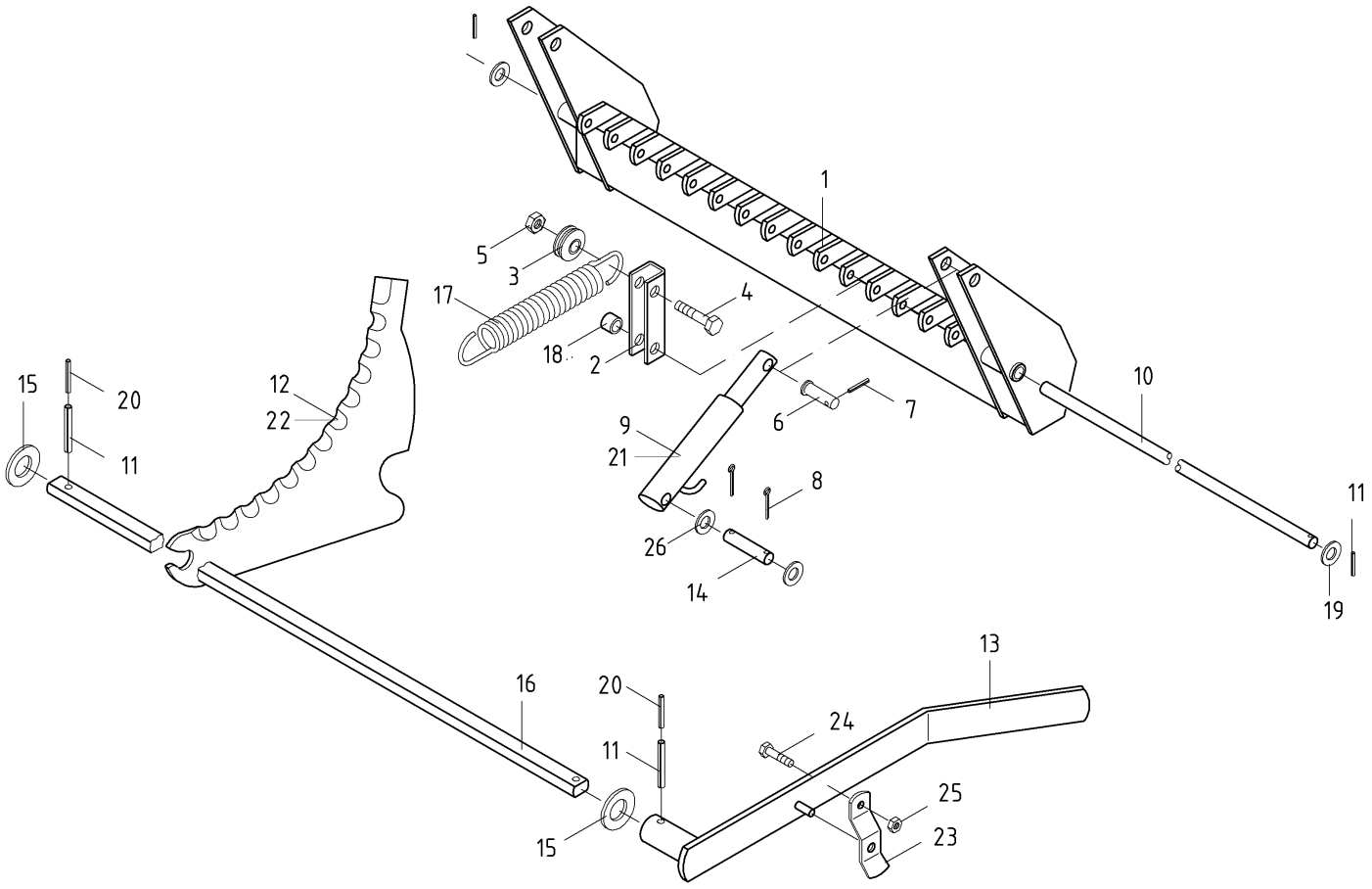
1
5
3
17
4
18
2
15
20
12
22
11
9
21
6
7
10
8
26
14
11
19
13
16
20
24
11
25
15
23

02RL01_42

6490 / FRAME, KNIVES 14-OC

PosNo.	Part No.	Qty.	Description	Remark
1	VF16613976.86	1	FRAME	
2	VF06579564.86	14	YOKE/RETAINER	
3	VF16618515	14	ROLLER	
4	KG00355661	14	HEX. BOLT M10X60 8.8	
5	KG01068861	14	LOCK NUT M10 10	
6	VF16512862	2	PIN	
7	KG01186662	4	TENSION PIN 4X32	
8	VF01122071	4	SPLIT PIN	
9	VF06579628	2	HYDR. CYLINDER	
10	VF16655089	1	SHAFT	
11	VGND4030V	3	PIN, TENSION	
12	VF16613168	14	KNIFE	
13	VF16617521.86	1	LEVER	
14	VF06277506	2	PIN	
15	VF06214306	4	WASHER	
16	VF06579571	1	AXLE	
17	VF16618516	14	TENSION SPRING	
18	VF16512934	13	PIPE	
19	KG01267961	4	WASHER M20	
20	VF01157314	1	DOWEL PIN	
21	VF16513632		SEALING SET	
22	VF16653188	14	BLADE, HARDENED	
23	VF06552557	1	LEAF SPRING	
24	KG00468761	1	HEX. SCREW M6X16 8.8	
25	KG01067361	1	LOCK NUT M6 8	
26	VF06214306	4	WASHER	

6490 / CYLINDER, PICK-UP (14-OC + 23-OC SS)

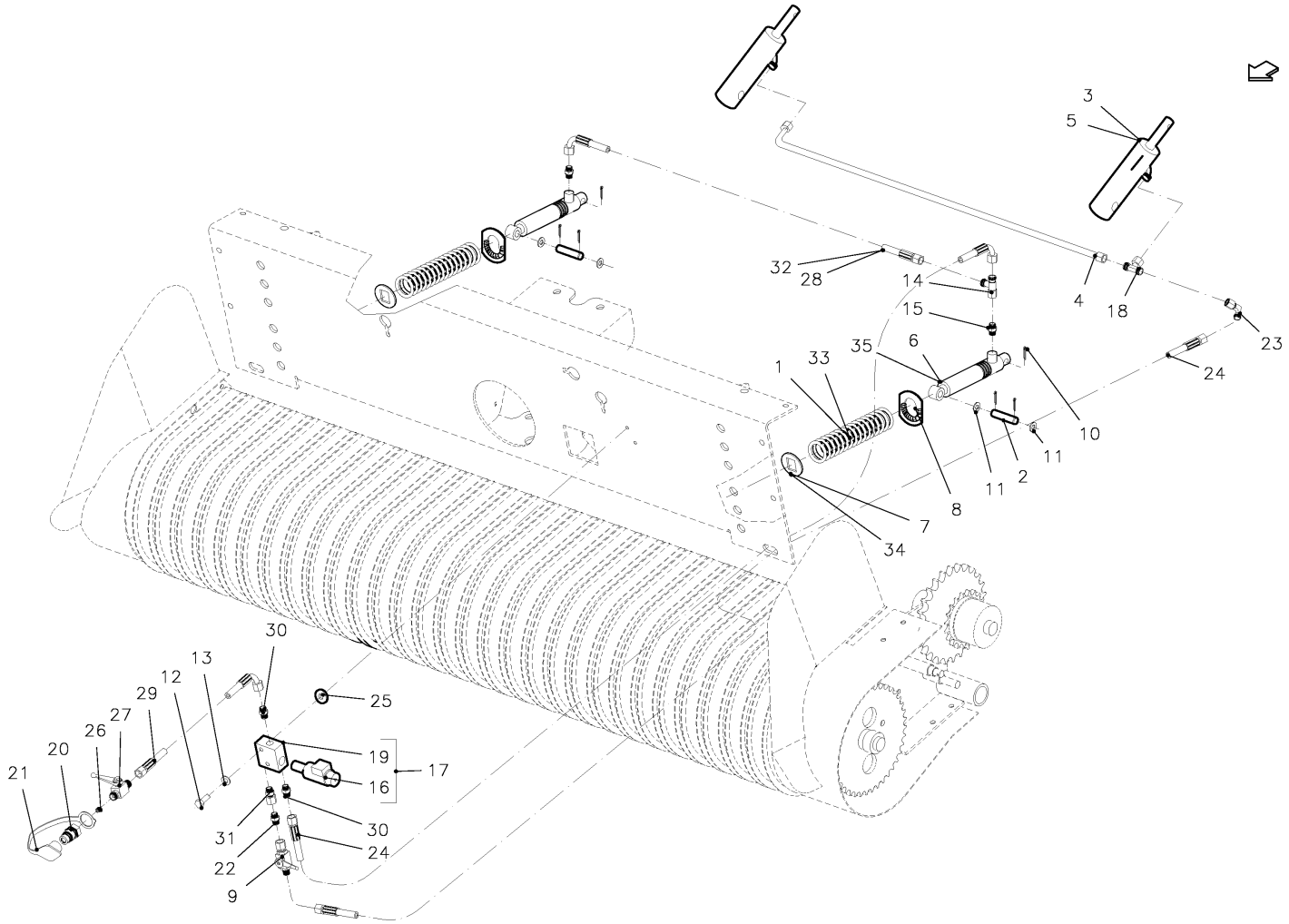

SPMVG000456

6490 / CYLINDER, PICK-UP (14-OC + 23-OC SS)

PosNo.	Part No.	Qty.	Description	Remark
1	VF06215425	2	COMPRESSION SPRING	
2	VF16652834	2	PIN	
3	VF06579628	2	HYDR. CYLINDER	
4	VF16512957	1	PIPE/LINE	
5	VF16513632	1	SEALING SET	GIVE QUANTITY WHEN ORDERING
6	VF16514629	1	CYLINDER, HYDR.	
7	VF16519184	2	WASHER/DISC/PLATE	
8	VF16618323	2	CLIP	
9	VGBF00349	1	VALVE ASSY, SHUT-OFF	
10	KG01251561	6	SPLIT PIN 4X25 ST	
11	KG01267761	4	WASHER M16	
12	VGND1472V	2	BOLT, TAPTITE	
13	VGND3122V	2	WASHER, PLAIN	
14	VGND92032V	1	MALE STUD TEE STUD BARREL, ADJ	
15	VGND92114V	2	COUPLING	
16	VGND92198	1	SELECTOR VALVE	
17	VGND92197	1	BODY, VALVE	
18	VGND92154V	1	T-COUPLING, ADJUSTABLE	
19	VGND92159	1	BLOCK, HYDR.	
20	VGTP00512	1	QUICK-DISCONNECT PLUG, MALE	
21	VGND9607	1	COVER, DUST	
22	VGND9807V	1	STUD COUPLING, MALE	
23	VGND9906V	1	ELBOW COUPLING, ADJUSTABLE	
24	VGRL299	2	HOSE, HP	
25	VGTH100V	2	RING	
26	VGTP438	1	THROTTLE, SCREW	
27	VGWA00659	1	VALVE, SHUT-OFF	
28	VGWA549	1	HOSE, HP	14-OC
29	VGYD64	1	HOSE, HP	
30	VGND9869V	2	STUD COUPLING	
31	VGND9392V	1	COUPLING	
32	VGXD314	1	HOSE, HP	23-OC SS
33	VF16654457	2	DRUCKFEDER 6,3/44,0 /185	23-OC
34	VF16652343	2	HYDRAULIC CYLINDER	23-OC
35	VF06214411	2	WASHER	23-OC

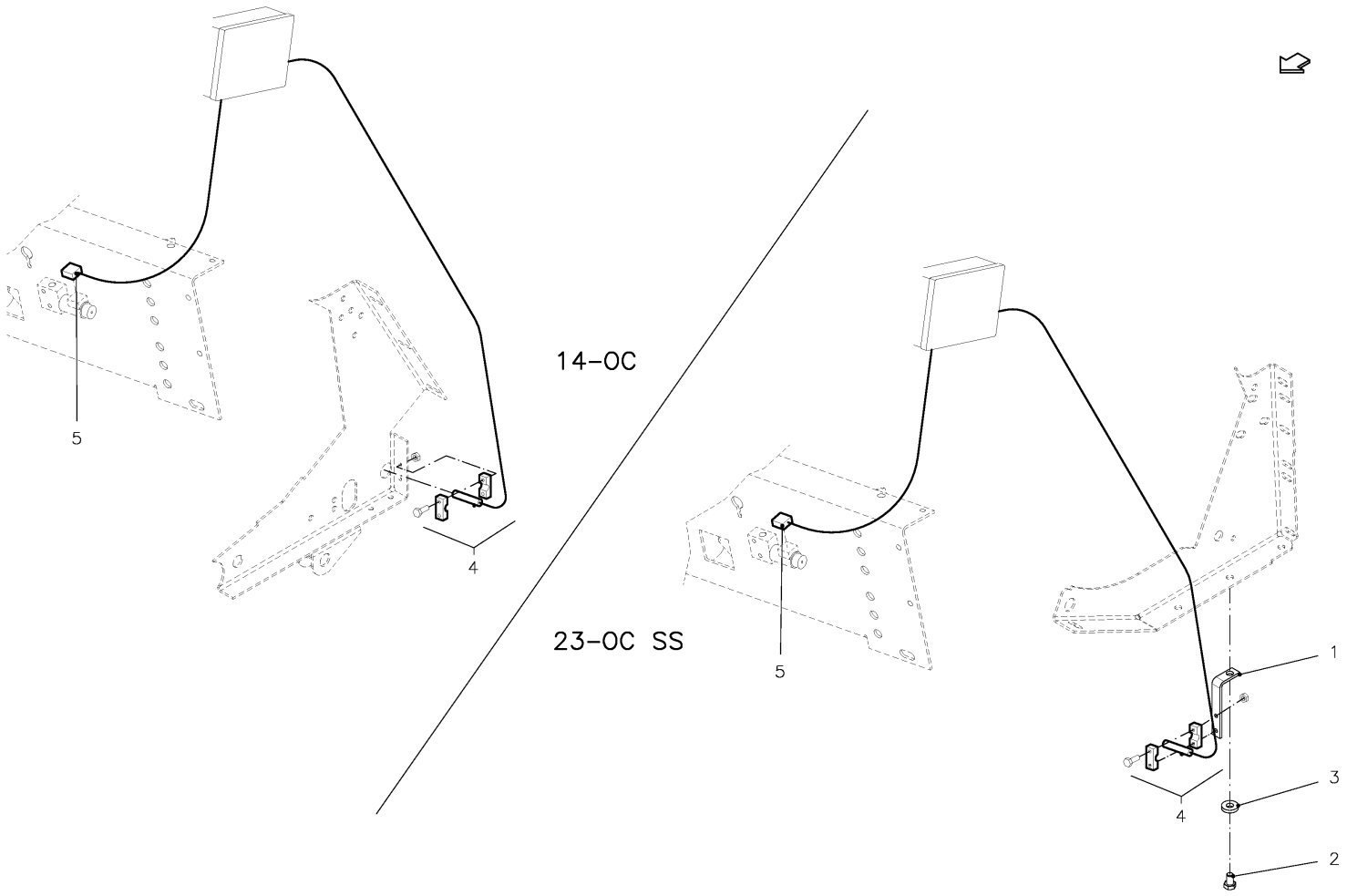

SPMVG000455

6490 / SENSOR ASSY

PosNo.	Part No.	Qty.	Description	Remark
1	VF16657711.86	1	HOLDER	
2	KG00476261	1	HEX. SCREW M12X20 8.8	
3	VGND3148V	1	CIRCLIP	
4	VNB0446473	2	SENSOR ASSY PROX PLAST L=2M	
5	VNB0271073	2	CABLE VALVE L=1.1M	

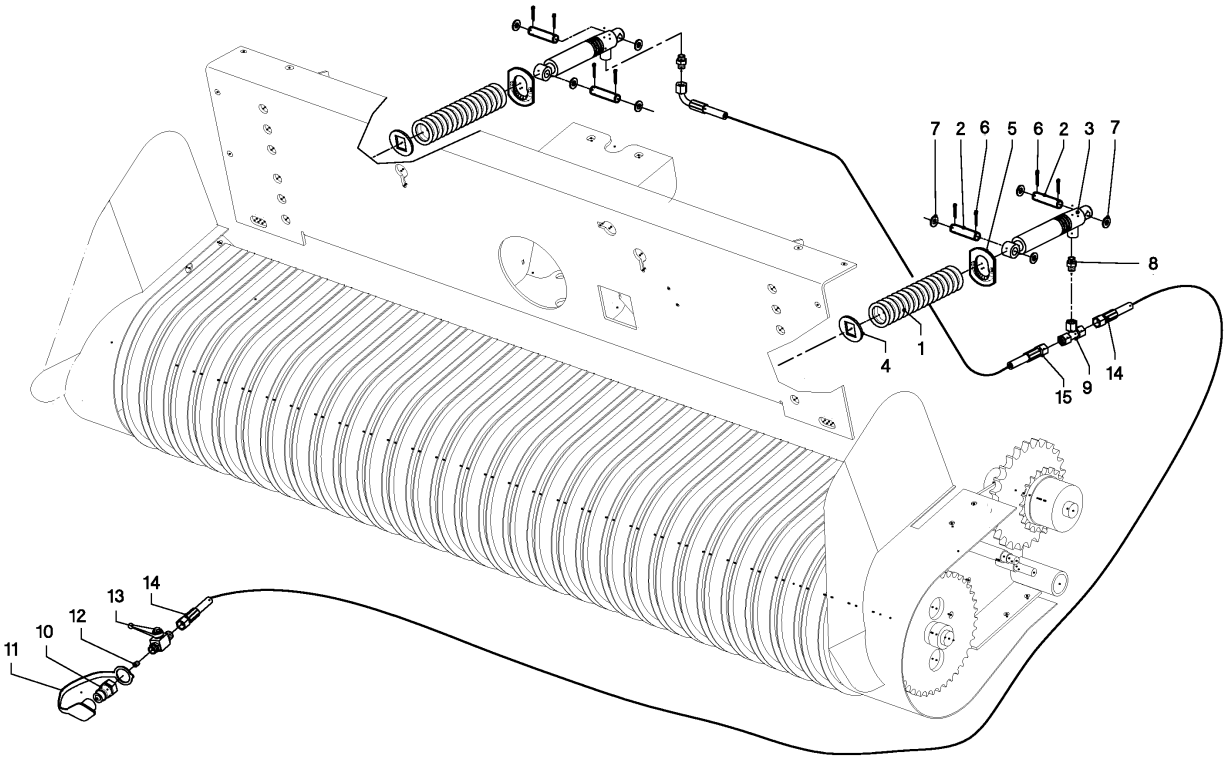

02RL01_50

6490 / CILINDER, PICK-UP (XL-R + R)

PosNo.	Part No.	Qty.	Description	Remark
1	VF06215425	2	COMPRESSION SPRING	
2	VF16652834	4	PIN	
3	VF16514629	2	CYLINDER, HYDR.	
4	VF16519184	2	WASHER/DISC/PLATE	
5	VF16618323	2	CLIP	
6	KG01251561	8	SPLIT PIN 4X25 ST	
7	KG01267761	8	WASHER M16	
8	VGND92114V	2	COUPLING	
9	VGND92154V	1	T-COUPLING, ADJUSTABLE	
10	VGTP00512	1	QUICK-DISCONNECT PLUG, MALE	
11	VGND9607	1	COVER, DUST	
12	VGTP438	1	THROTTLE, SCREW	
13	VGWA00659	1	VALVE, SHUT-OFF	
14	VGWA548	1	HOSE, HP	
15	VGWA549	1	HOSE, HP	

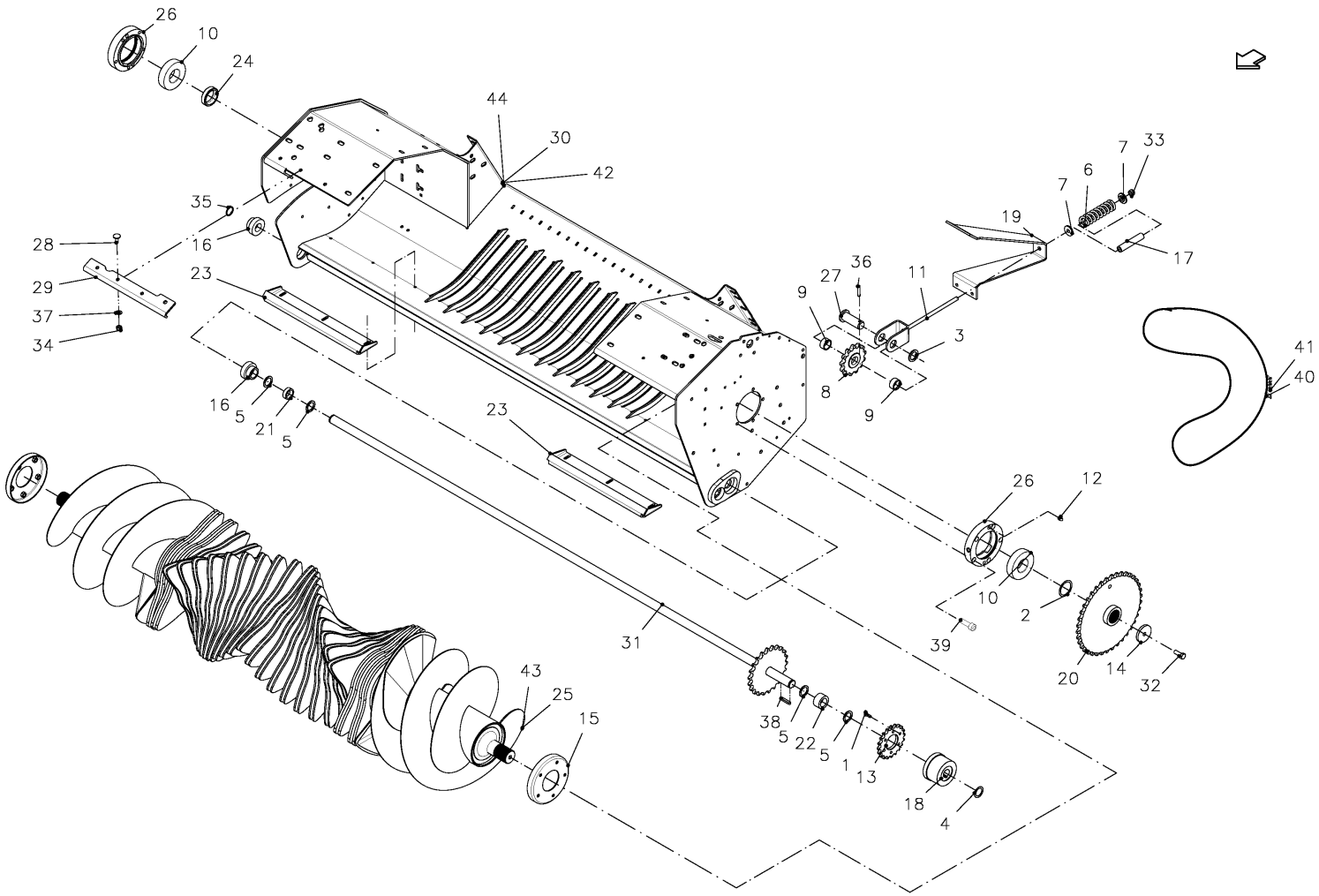

SPMVG000410

6490 / DRIVE (23-OC+XL-R)

PosNo.	Part No.	Qty.	Description	Remark
1	VF01173381	6	HEX.HEAD SCREW	
2	VGMT0063	1	SHIM SET	
3	VF06214321	1	WASHER	
4	VGMT00310	1	SHIM SET	
5	VGND3138V	4	RING	
6	VF06215432	1	COMPRESSION SPRING	
7	VF06550817	2	SPRING CUP	
8	VF06554382.86	1	CHAIN WHEEL	
9	VF16614124	2	SPACER TUBE	
10	VF16614126	2	BALL BEARING	
11	VF16614227.86	1	TENSIONER CHAIN	
12	VF16616404	1	GREASE NIPPLE	
13	VF16618017.86	1	SPROCKET	
14	VF16618448	1	WASHER	
15	VF16619098.61	2	PROTECTIVE DEVICE	
16	VF16619111	2	BEARING	
17	VF16619185	1	PIPE/TUBE	
18	VF16617905.86	1	CLUTCH	
19	VF16619877	1	SUPPORT	
20	VF16619892.86	1	SPROCKET	
21	VF16619893	1	SPACING TUBE	
22	VF16650327	2	PIPE, SPACING	
23	VF16651307.86	2	SCRAPER	
24	VF16651696	1	BEARING RACE	
25	VF16652480.86	1	ROTOR	
26	VF16654252.86	2	LAGERUNG RE. REV.	
27	VF16654530	1	PIN	
28	VF16654751	5	SCREW 10X25	
29	VF16655141	1	FIXING ANGLE	
30	VF16655895.86	1	FRAME, ROTOR	SUPER SILAGE
31	VGGB0205	1	SHAFT, DRIVE	
32	KG00476661	1	HEX. SCREW M12X35 8.8	
33	KG01068961	1	LOCK NUT M12 10	
34	KG01068861	5	LOCK NUT M10 10	
35	KG01108862	2	CIRCLIP-A 30 X 1.5	
36	KG01191962	1	TENSION PIN 8X45	
37	KG01267461	5	WASHER M10	
38	KG01307200	1	KEY 8X7X45	
39	VF06273756	10	SOCKET HEAD SCREW	
40	VGND96112	1	LINK	

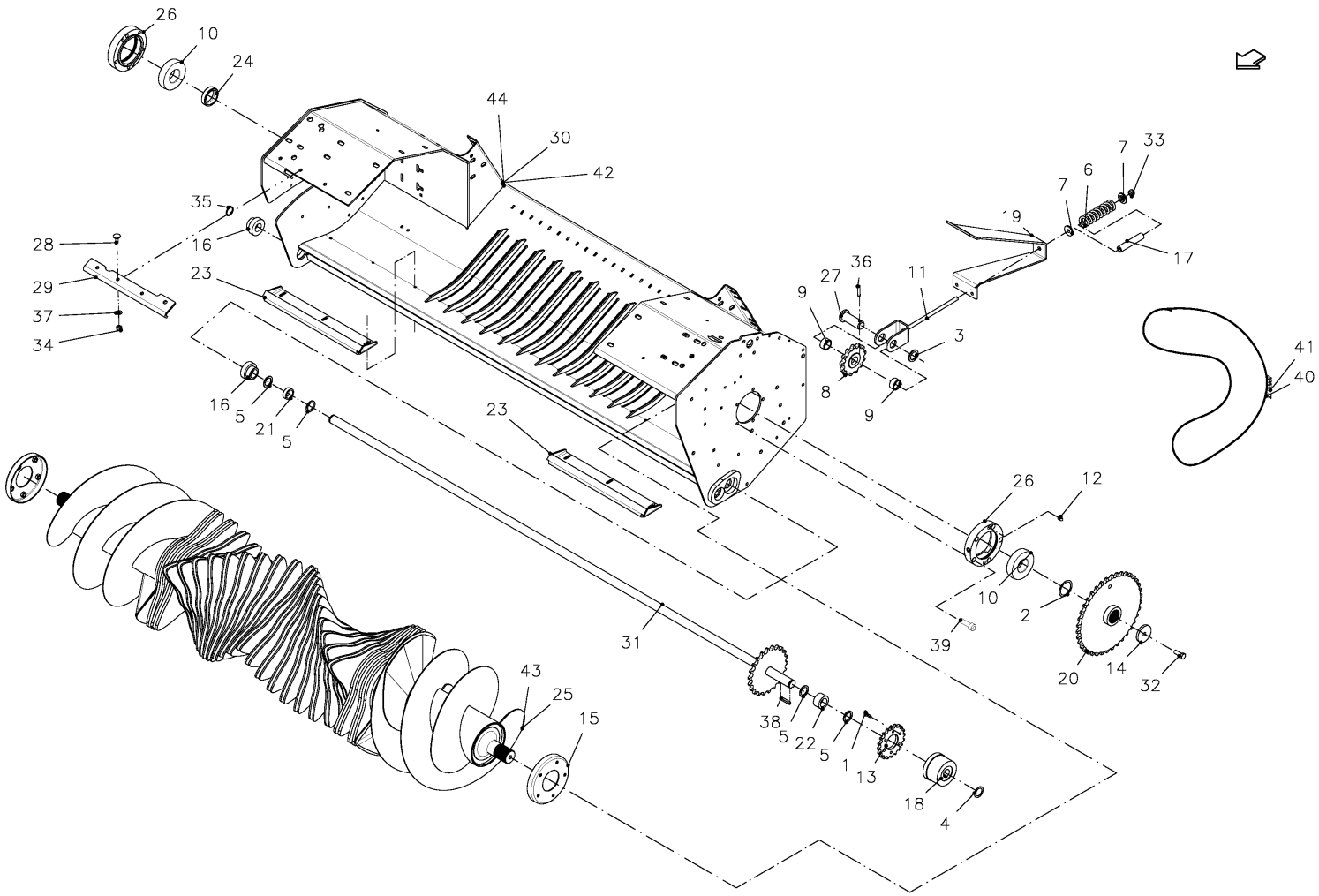

SPMVG000410

6490 / DRIVE (23-OC+XL-R)

PosNo.	Part No.	Qty.	Description	Remark
41	VGND96136	1	CHAIN, ROLLER, SIMPLEX	
42	VF16619855.86	1	FRAME	HYDRO PROTECT
43	VF16650850	1	F#RDERROTOR GSW.	XL-R
44	VF16650855	1	FRAME, ROTOR	XL-R

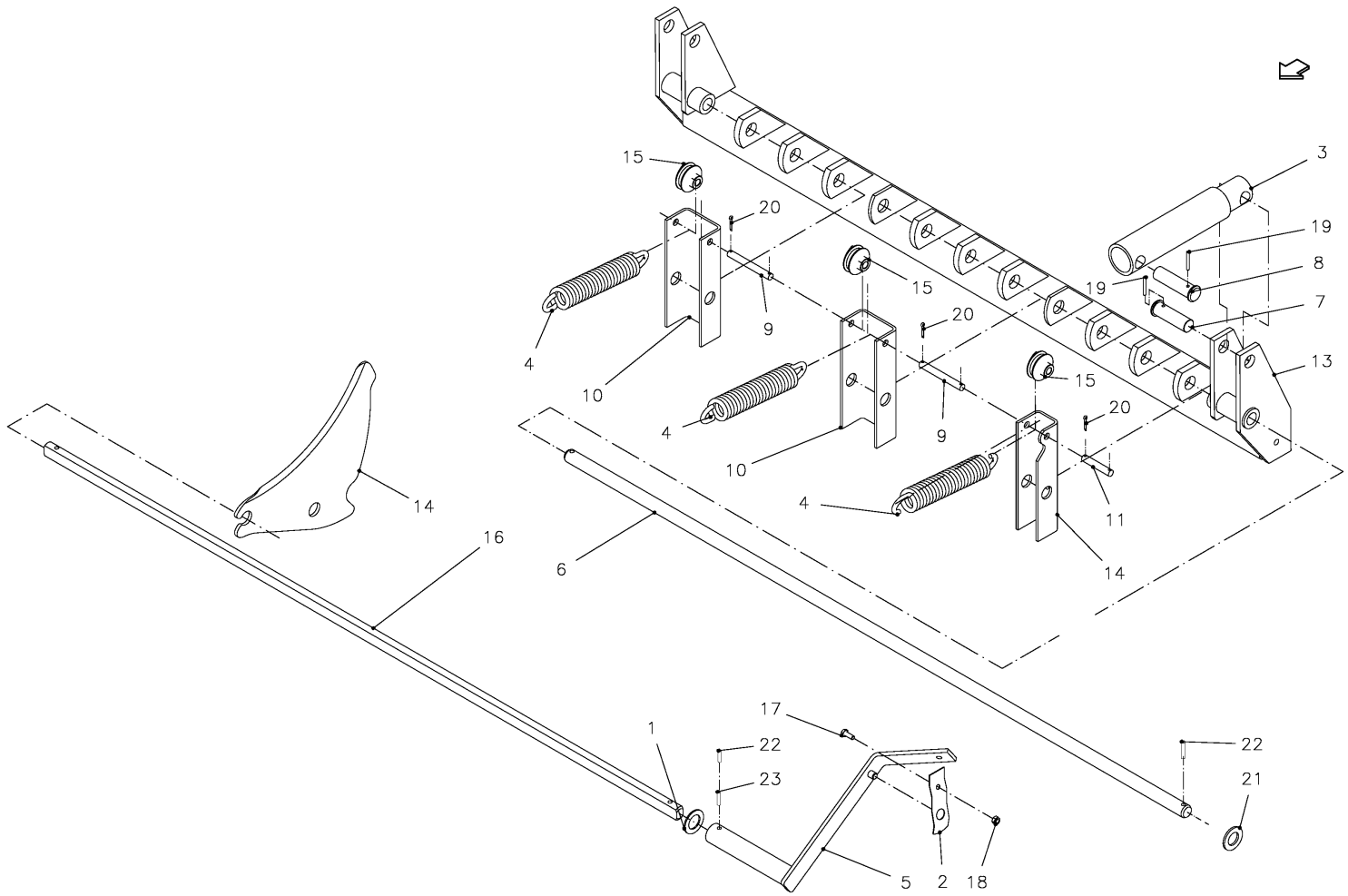

SPMVG000220

6490 / FRAME, KNIVES (23OC-SS)

PosNo.	Part No.	Qty.	Description	Remark
1	VF06214306	4	WASHER	
2	VF06552557	1	LEAF SPRING	
3	VF06579628	1	HYDR. CYLINDER	
4	VF16618516	12	TENSION SPRING	
5	VF16619724.86	1	LEVER	
6	VF16655089	1	SHAFT	
7	VF16655813	1	PIN	
8	VF16655849	1	PIN	
9	VF16655861	11	PIN	
10	VF16655862.86	11	BRACE	
11	VF16655863	1	PIN	
13	VF16655875.86	1	FRAMEWORK WELDED	
14	VF16655935	23	KNIFE OC23LC	
15	VF16657772.61	23	ROLLER	
16	VF16658677	1	AXLE	
17	KG00468761	1	HEX. SCREW M6X16 8.8	
18	KG01067361	1	LOCK NUT M6 8	
19	KG01186662	4	TENSION PIN 4X32	
20	KG01249661	24	SPLIT PIN 3.2X16 ST	
21	KG01267961	4	WASHER M20	
22	VGND4030V	4	PIN, TENSION	
23	VF01157314	2	DOWEL PIN	

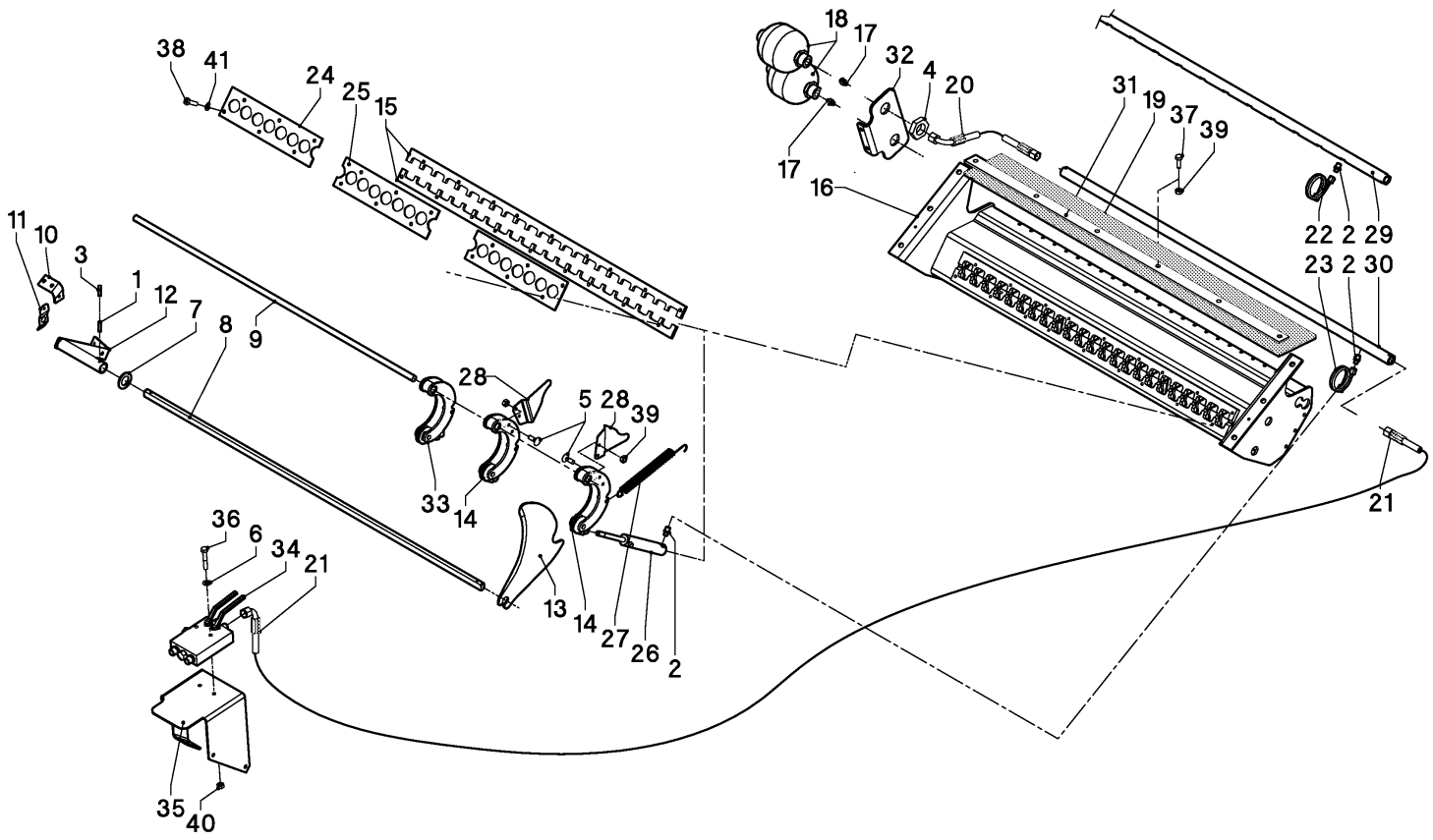
38
41
24
25
15
18
17
32
4
20
31
19
37
39
17
16
22
2
29
23
2
30
11
10
3
1
12
7
8
9
28
5
28
39
33
14
21
36
6
34
21
13
14
27
26
2
35
40

0705RL-46

6490 / FRAME, KNIVES (23-OC HP)

PosNo.	Part No.	Qty.	Description	Remark
1	VGND4030V	2	PIN, TENSION	
2	VF01116677	46	ERMETO NIPPLE	
3	VF01157314	2	DOWEL PIN	
4	VF06209627	2	CASTELATED NUT	
5	VF06214132	4	TRUSS-HEAD SCREW	
6	VF06214246	2	WASHER	
7	VF06214306	4	WASHER	
8	VF06579571	1	AXLE	
9	VF16619106	1	BAR	
10	VF16619169.86	1	RETRAINER	
11	VF16619716	1	SPRING	
12	VF16619724.86	1	LEVER	
13	VF16650699	23	KNIFE	
13	ACCESSOIRE	1	PLEASE CONTACT YOUR DEALER	23-OC
14	VF16652067	2	SUPPORT	
15	VF16650998	2	LEDGE	
16	VF16651042.86	1	SUPPORT	
17	VF16651185	2	PIPE CONNECTION	
18	VF16651114	2	ACCUMULATOR	
19	VF16651157	1	PROTECTION CURTAIN	
20	VF16651183	2	HOSE	
21	VGLG200	2	HOSE, HP	
22	VF16651186	11	TUBE	
23	VF16651188	12	TUBE	
24	VF16651203	2	PLATE	
25	VF16651204.86	1	PLATE	
26	VF16651207	23	HYDR.RAM	
27	VF16651304	23	SPRING	
28	VGGP1419K0	2	PLATE	
29	VF16651327	1	PIPE	
30	VF16651329	1	PIPE	
31	VF16651331	1	LEDGE	
32	VF16651337.86	1	GRANARY SUPPORT	
33	VF16652067	21	SUPPORT	
34	VF16651638	1	BALL-TYPE VALVE	
35	VGWP140	1	SUPPORT	BALE PACK ONLY
36	KG00353461	2	HEX. BOLT M8X50 8.8	
37	KG00468961	6	HEX. SCREW M6X20 8.8	
38	KG00471900	15	HEX. SCREW M8X20 8.8	
39	KG01067361	10	LOCK NUT M6 8	

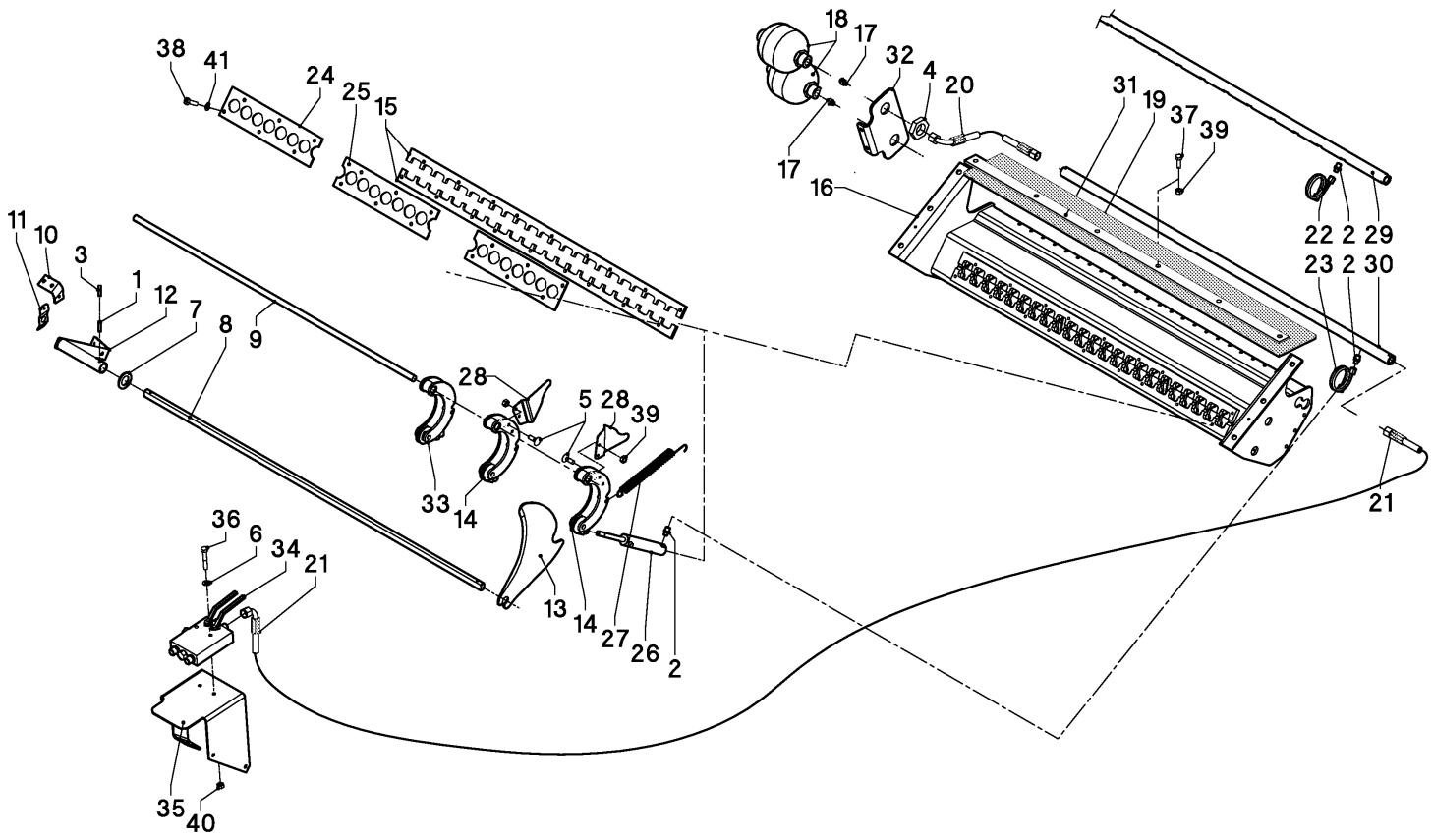
38
41
24
25
15
18
17
32
4
20
31
19
37
39
17
16
22
2
29
23
2
30
11
10
3
1
12
7
8
9
28
5
28
39
33
14
21
36
6
34
21
13
14
27
26
2
35
40

0705RL-46

6490 / FRAME, KNIVES (23-OC HP)

PosNo.	Part No.	Qty.	Description	Remark
40	KG01068761	2	LOCK NUT M8 10	
41	KG01281661	15	SPRING WASHER M8	

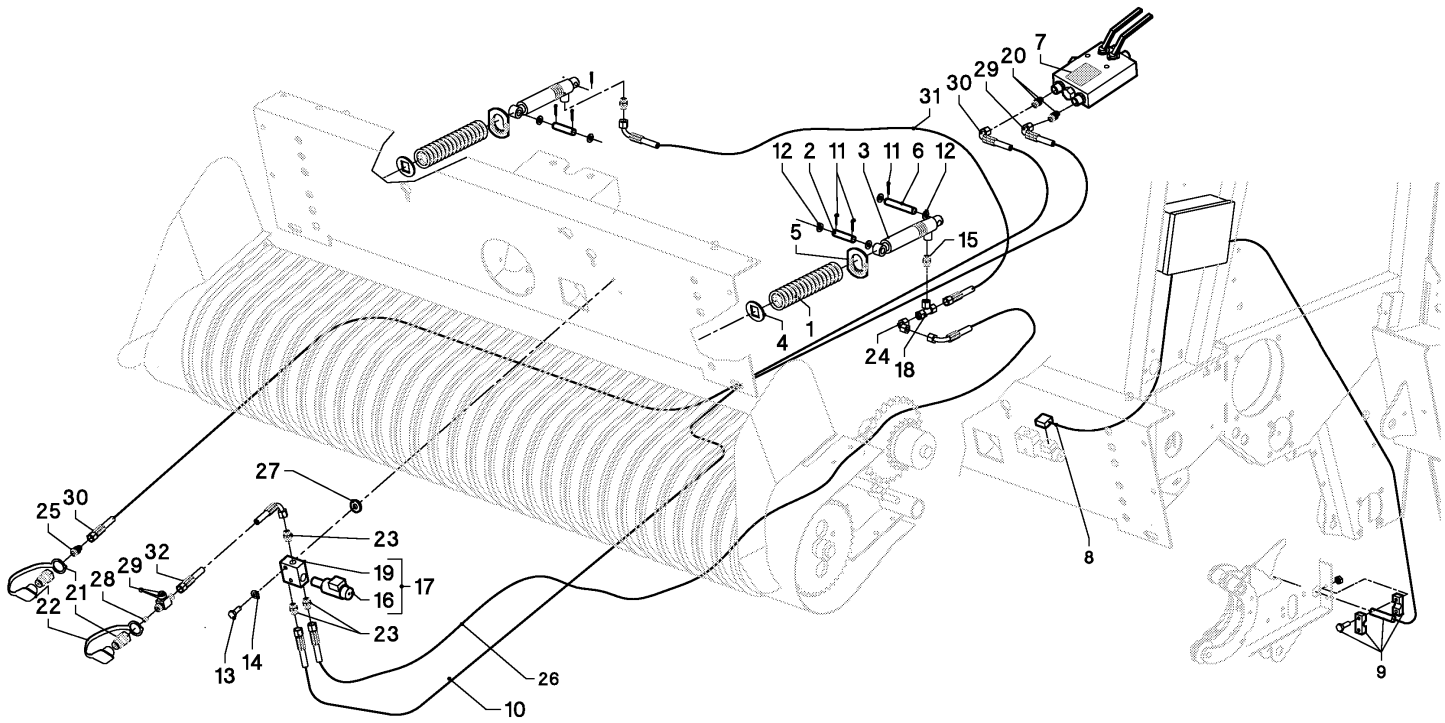
7
20
29
30
31
1
12
2
11
3
11
6
12
5
15
4
1
24
18
8
9
27
25
30
23
19
17
16
32
29
28
21
22
23
13
14
26
10

0703RL-51

6490 / CILINDER, PICK-UP (23-OC HP)

PosNo.	Part No.	Qty.	Description	Remark
1	VF06215425	2	COMPRESSION SPRING	
2	VF06576501	2	PIN	
3	VF16514629	2	CYLINDER, HYDR.	
4	VF16519184	2	WASHER/DISC/PLATE	
5	VF16618323	2	CLIP	
6	VF16652834	2	PIN	
7	VF16653051	1	WARNING PLATE	
8	VNB0271073	1	CABLE VALVE L=1.1M	
9	VNB0446473	1	SENSOR ASSY PROX PLAST L=2M	
10	VGFS97	1	HOSE, HP	
11	KG01251561	8	SPLIT PIN 4X25 ST	
12	KG01267761	8	WASHER M16	
13	VGND1472V	2	BOLT, TAPTITE	
14	VGND3122V	2	WASHER, PLAIN	
15	VGND92114V	2	COUPLING	
16	VGND92198	1	SELECTOR VALVE	
17	VGND92197	1	BODY, VALVE	
18	VGND92154V	1	T-COUPLING, ADJUSTABLE	
19	VGND92159	1	BLOCK, HYDR.	
20	VGND92168V	2	PIPE	
21	VGTP00512	2	QUICK-DISCONNECT PLUG, MALE	
22	VGND9607	2	COVER, DUST	
23	VGND9869V	3	STUD COUPLING	
24	VGND9906V	1	ELBOW COUPLING, ADJUSTABLE	
25	VGND9954V	1	STUD COUPLING, MALE	
26	VGRL299	1	HOSE, HP	
27	VGTH100V	1	RING	
28	VGTP438	1	THROTTLE, SCREW	
29	VGWA00659	1	VALVE, SHUT-OFF	
30	VGWA515	1	HOSE, HP	
31	VGXD314	1	HOSE, HP	
32	VGYD64	1	HOSE, HP	

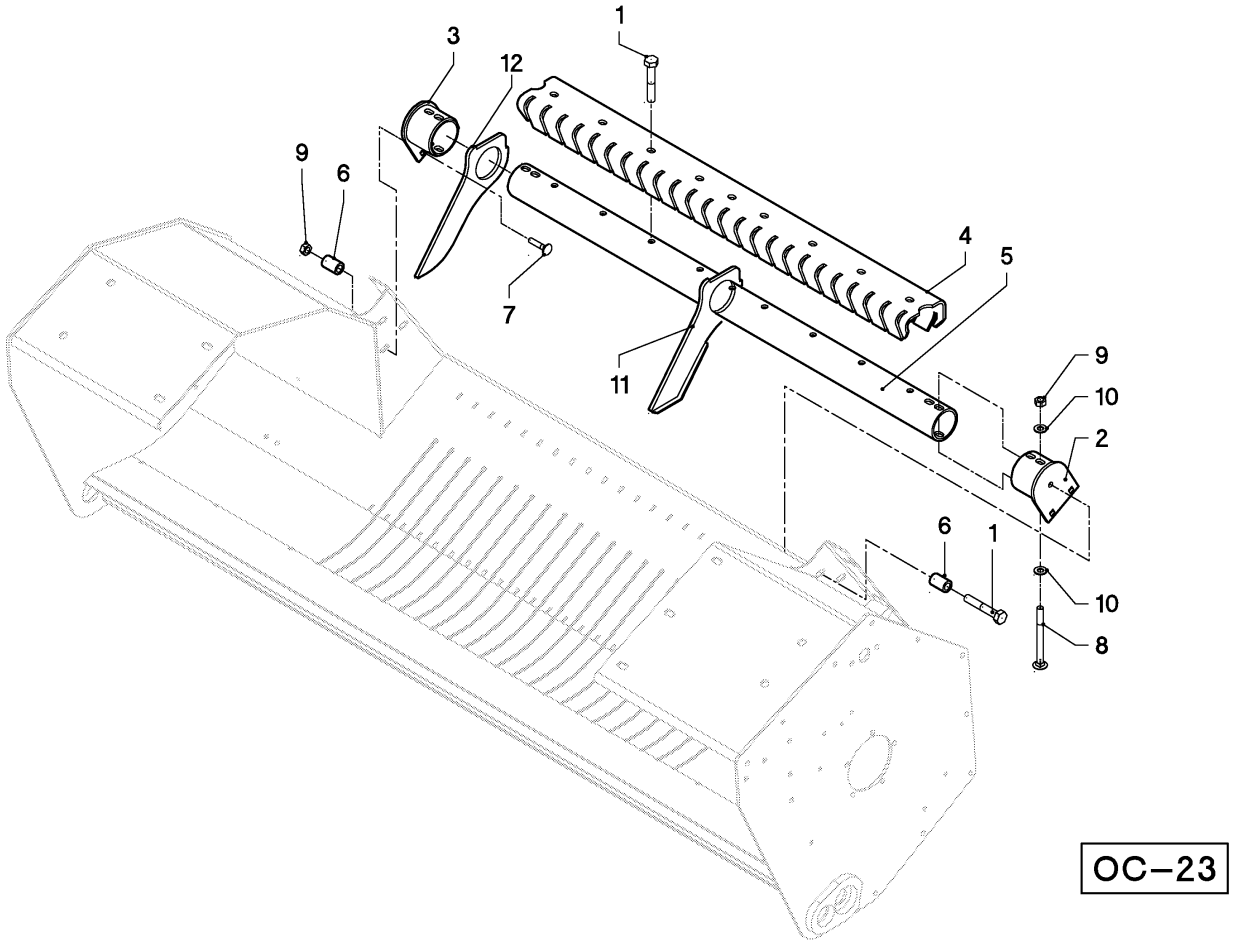

02RL01_47

6490 / FRAME, GUIDE (23-OC)

PosNo.	Part No.	Qty.	Description	Remark
1	VGND1495V	11	BOLT, NUTTED, SPEC.	
2	VF16619091	1	HOLDER	
3	VF16619092	1	HOLDER	
4	VF16619199	1	COMB	
5	VF16619797	1	PIPE	
6	VF16650801	6	PIPE	
7	KG00645261	4	CARRIAGE BOLT M12X50 8.8	
8	KG00646061	4	CARRIAGE BOLT M12X100 8.8	
9	KG01068961	19	LOCK NUT M12 10	
10	KG01267561	13	WASHER M12	
11	VGWA01411	18	SCRAPER	
12	VGWA1413	6	SCRAPER	

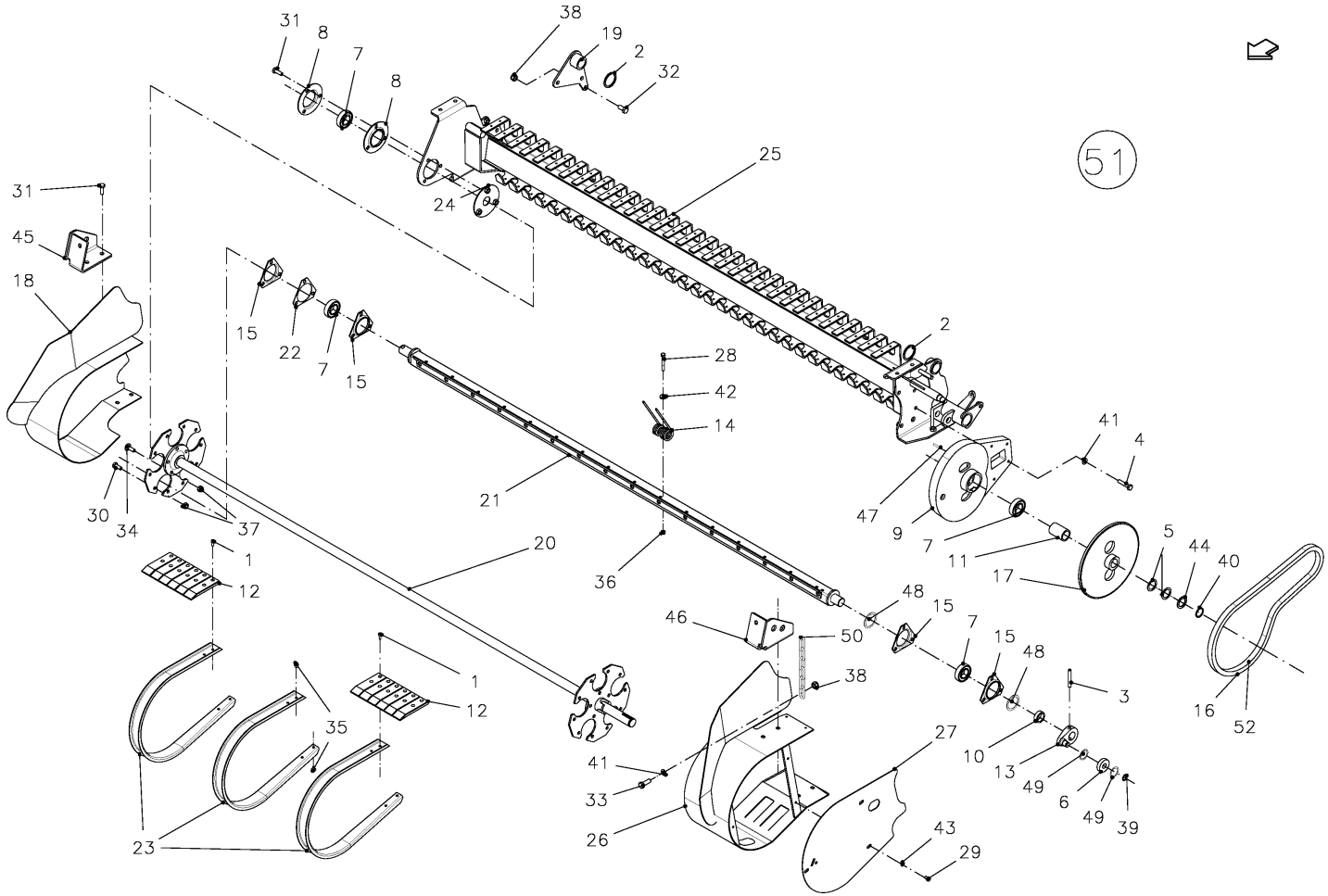

SPMVG000503

6490 / PICK-UP ASSY (XL-R, OC-23)

PosNo.	Part No.	Qty.	Description	Remark
1	VF01104181	12	CYLINDR. SCREW	
2	VF01137130	2	SPACER RING 45X55X3	
3	KG01190062	5	TENSION PIN 6X70	
4	VF06209483	2	HEX.HEAD SCREW	
5	VGMT00310	2	SHIM SET	
6	VF06215027	5	ROLLER	
7	VF06215766	12	ROLLER BEARING	
8	VF06215783	2	HOUSING, FLANGED	
9	VF16617225.86	1	GUIDE	
10	VF16617910	5	INTERMEDIATE TUBE	
11	VF16618011.86	1	SPACER TUBE	
12	VF16618012	12	PLASTIC SEGMENT	
13	VF16615203.86	5	CONTROL ARM	
14	VF16618868.86	80	FEDERZINKEN PU 4 WIND. MP 122	
15	VF16619739	20	BEARING FLANGE	
16	VF16618449	1	CHAIN	
17	VF16619858.86	1	SPROCKET	
18	VF16652328.86	1	SIDE PART RIGHT	
19	VF16653304.86	1	BEARING FLANGE	
20	VF16654308.86	1	DRIVE SHAFT	
21	VF16654311.86	5	PIPE	
22	VF16655023	5	WASHER	
23	VF16655943	31	PICK UP GLEITBLECH	
24	VF16656715	1	SCHEIBE GSW.	
25	VF16656726.86	1	PU TRAEGER 2300 GP GSW.	
26	VGGP02000K0	1	PLATE, SIDE, LH	
27	VGGP1098K0	1	LID	
28	KG00353661	80	HEX. BOLT M8X60 8.8	
29	KG00471561	3	HEX. SCREW M8X12 8.8	
30	KG00474261	20	HEX. SCREW M10X25 8.8	
31	KG00474361	10	HEX. SCREW M10X30 8.8	
32	KG00476461	2	HEX. SCREW M12X25 8.8	
33	KG00476661	2	HEX. SCREW M12X35 8.8	
34	KG00641561	5	CARRIAGE BOLT M10X30 8.8	
35	KG00980461	100	FLANGED BOLT M6X10 90	
36	KG01068761	80	LOCK NUT M8 10	
37	KG01068861	30	LOCK NUT M10 10	
38	KG01068961	4	LOCK NUT M12 10	
39	KG01107562	5	CIRCLIP-A 17 X 1	
40	KG01108862	1	CIRCLIP-A 30 X 1.5	

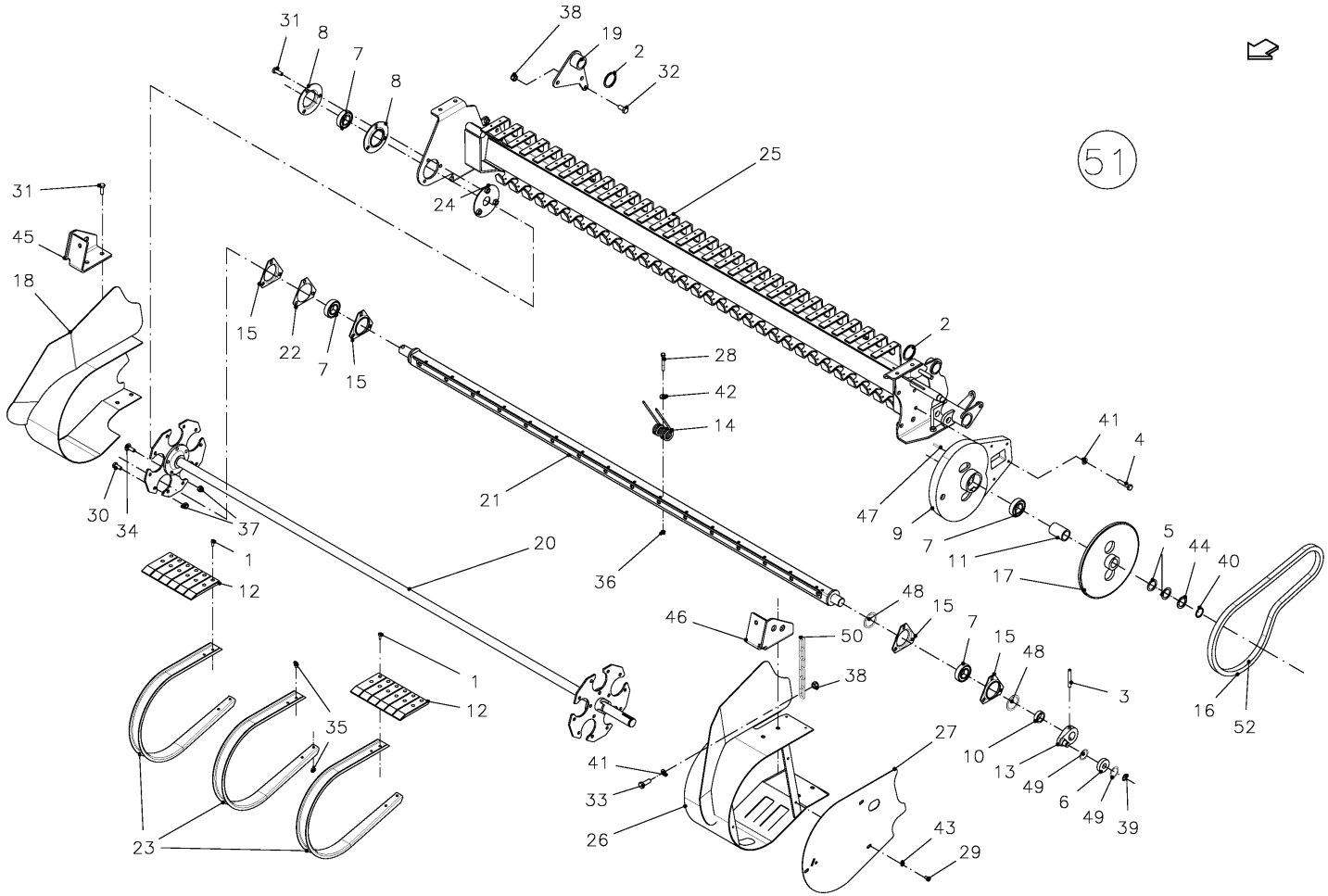

SPMVG000503

6490 / PICK-UP ASSY (XL-R, OC-23)

PosNo.	Part No.	Qty.	Description	Remark
41	KG01267461	4	WASHER M10	
42	KG01273561	80	WASHER M8	
43	KG01281661	3	SPRING WASHER M8	
44	VGND3138V	4	RING	
45	VGWS0222	1	HOLDER, RH	
46	VGWS0223	1	HOLDER, LH	
47	VF01157427	1	DOWEL PIN	
48	VF01170940	10	NILOS-RING	
49	VF06214938	10	NILOSRING 6303 ZAV	
50	VF16618864	2	CHAIN/TRACK	
51	VF16656700	1	PU 2300 GP VORM.	
52	VGND9346	1	LINK, SIMPL.	

6490 / CHAIN TENSIONER (23OC+23OC-SS)

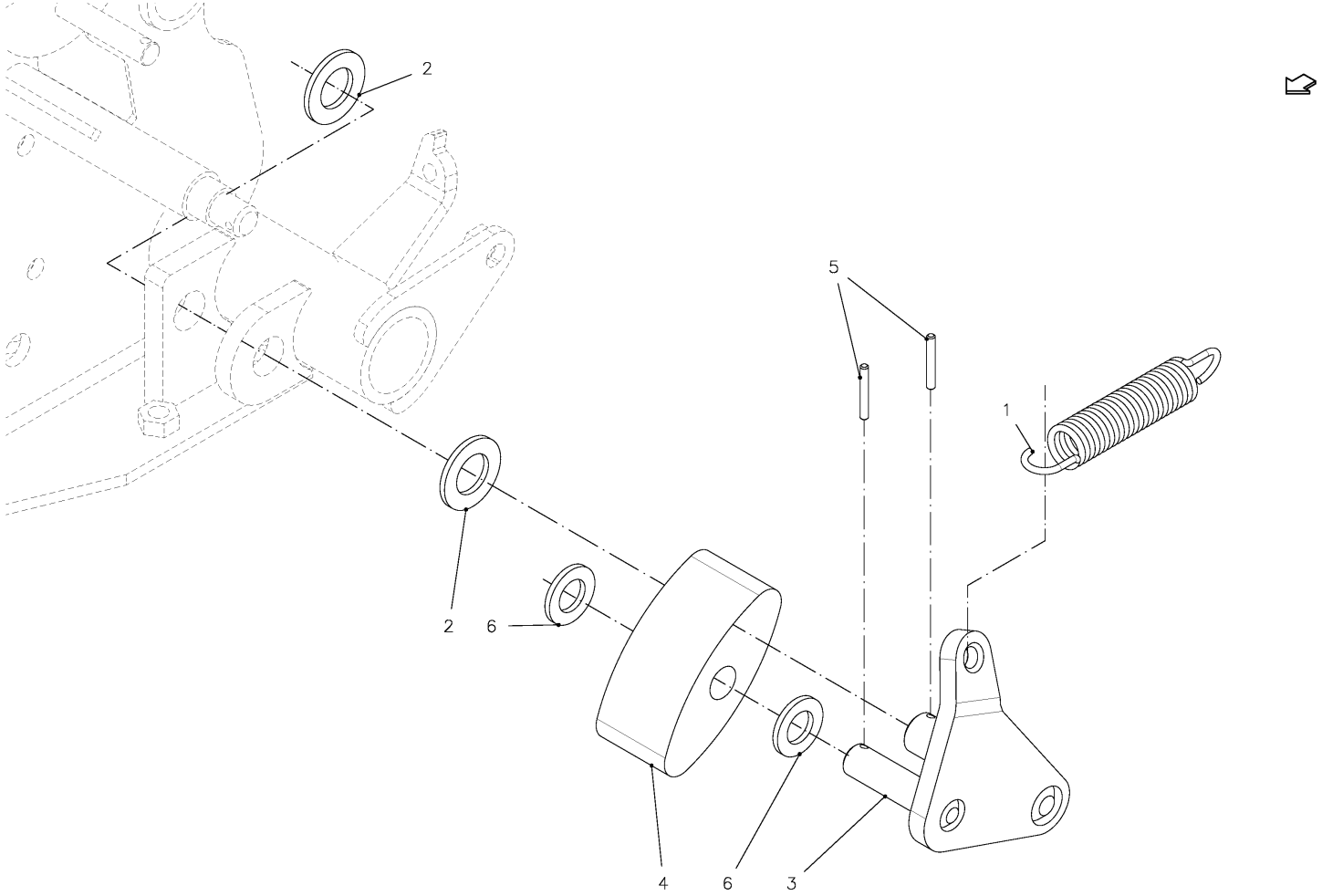

SPMVG000483

6490 / CHAIN TENSIONER (23OC+23OC-SS)

PosNo.	Part No.	Qty.	Description	Remark
1	VF06215541	1	TENSION SPRING	
2	VGEH00102	4	SHIM SET	
3	VGGP01856K0	1	SUPPORT	
4	VGGP1855	1	TENSIONNER	
5	KG01186562	2	TENSION PIN 4X30	
6	KG01267761	2	WASHER M16	

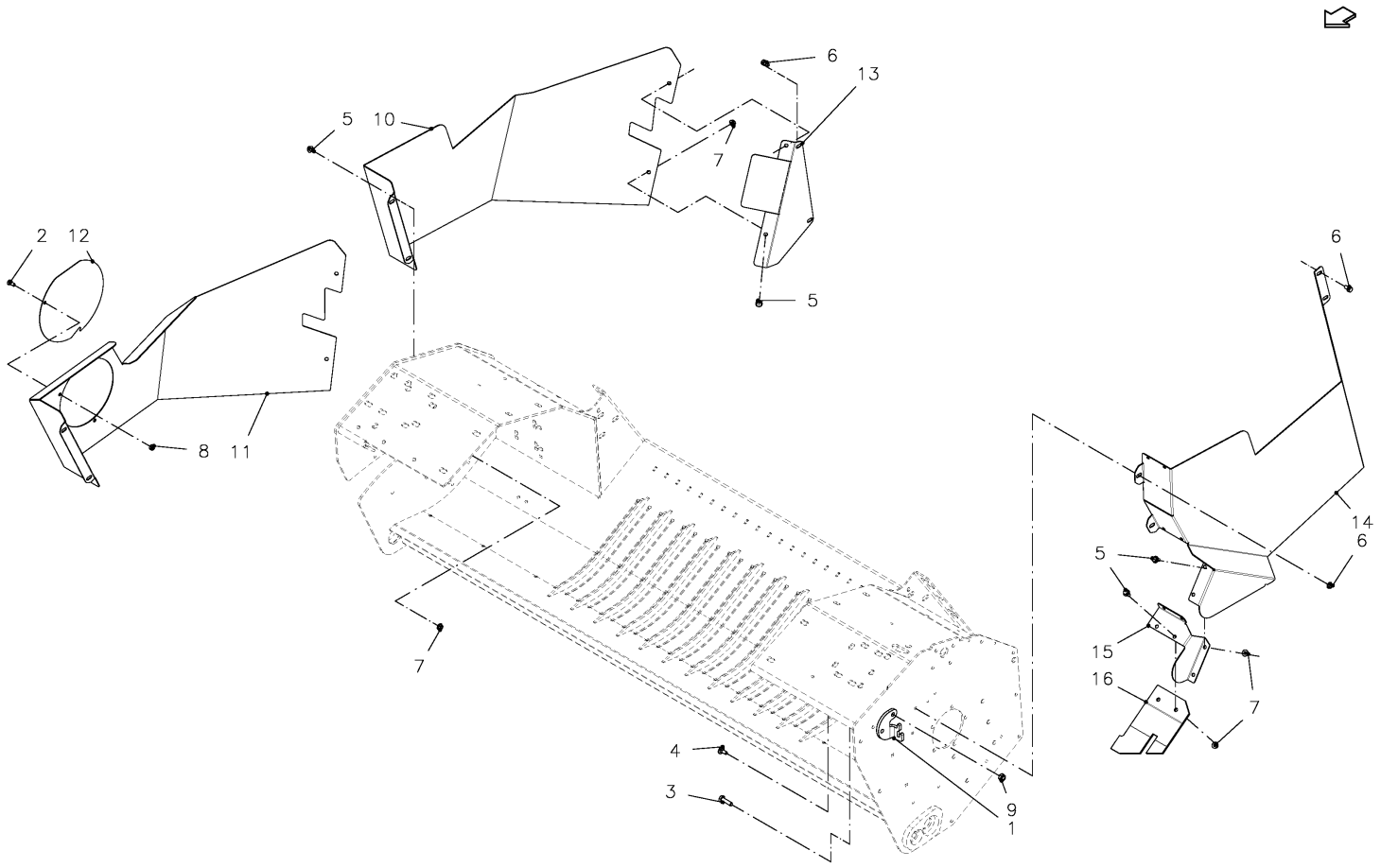

SPMVG000446

6490 / PROTECTION (23-OC + XL-R)

PosNo.	Part No.	Qty.	Description	Remark
1	VGGP455K0	2	BRACE	
2	KG00471761	2	HEX. SCREW M8X16 8.8	
3	KG00474461	4	HEX. SCREW M10X35 8.8	
4	KG00639061	2	CARRIAGE BOLT M8X20 8.8	
5	KG00981161	9	FLANGED BOLT M8X16 90	
6	KG01000661	4	FLANGED BOLT M8X15	
7	KG01061261	11	LOCK NUT M8 8	
8	KG01068761	2	LOCK NUT M8 10	
9	KG01068861	4	LOCK NUT M10 10	
10	VGRL444K0	1	GUARD, PROTECT., RH	
11	VGRL538K0	1	GUARD, PROTECT., RH	POWER PUSH
12	VGRL540K0	1	PLATE	POWER PUSH
13	VGRL567K0	1	PLATE	
14	VGRL627K0	1	GUARD, PROTECT., LH	
15	VGRL628K0	1	GUARD, PROTECT., LH	
16	VGWS200	1	SEAL	

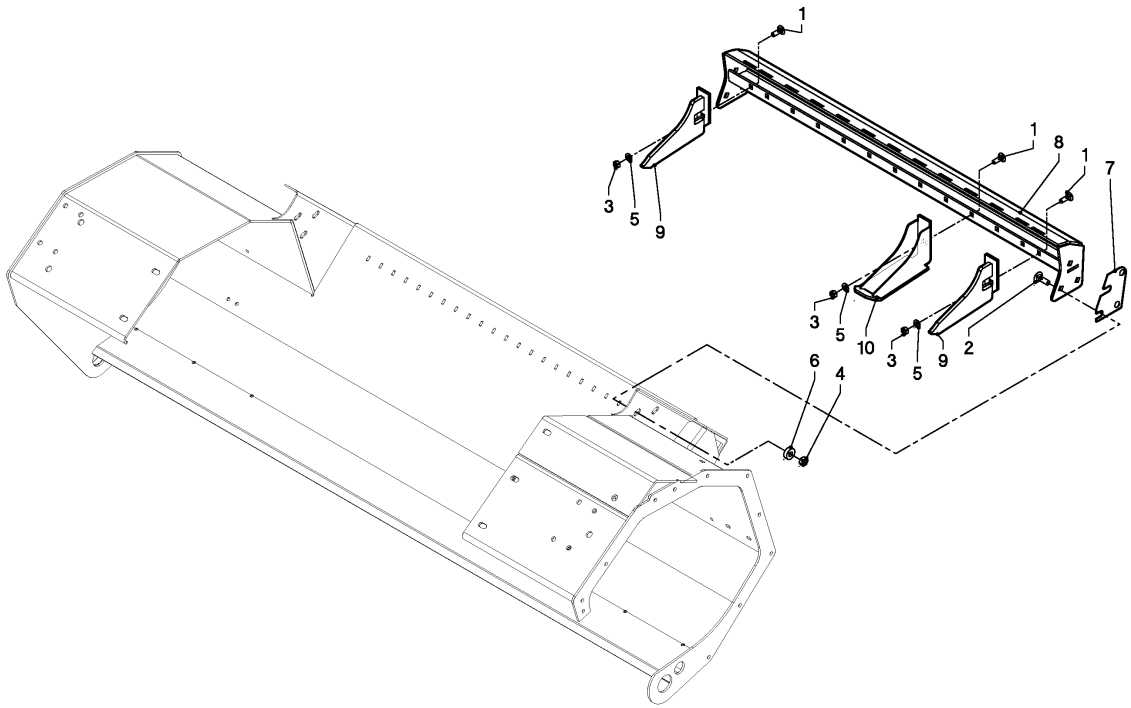

02RL01_53

6490 / FRAME, GUIDE (XL-R)

PosNo.	Part No.	Qty.	Description	Remark
1	KG00641561	13	CARRIAGE BOLT M10X30 8.8	
2	KG00645261	6	CARRIAGE BOLT M12X50 8.8	
3	KG01068861	13	LOCK NUT M10 10	
4	KG01068961	6	LOCK NUT M12 10	
5	KG01267461	13	WASHER M10	
6	VRR0050093	6	SLEEVE	
7	VRR0703293	6	PLATE, SHIM	
8	VGWA01455	1	BEAM	
9	VGWA01460	2	SCRAPER	
10	VGWA01590	11	SCRAPER	

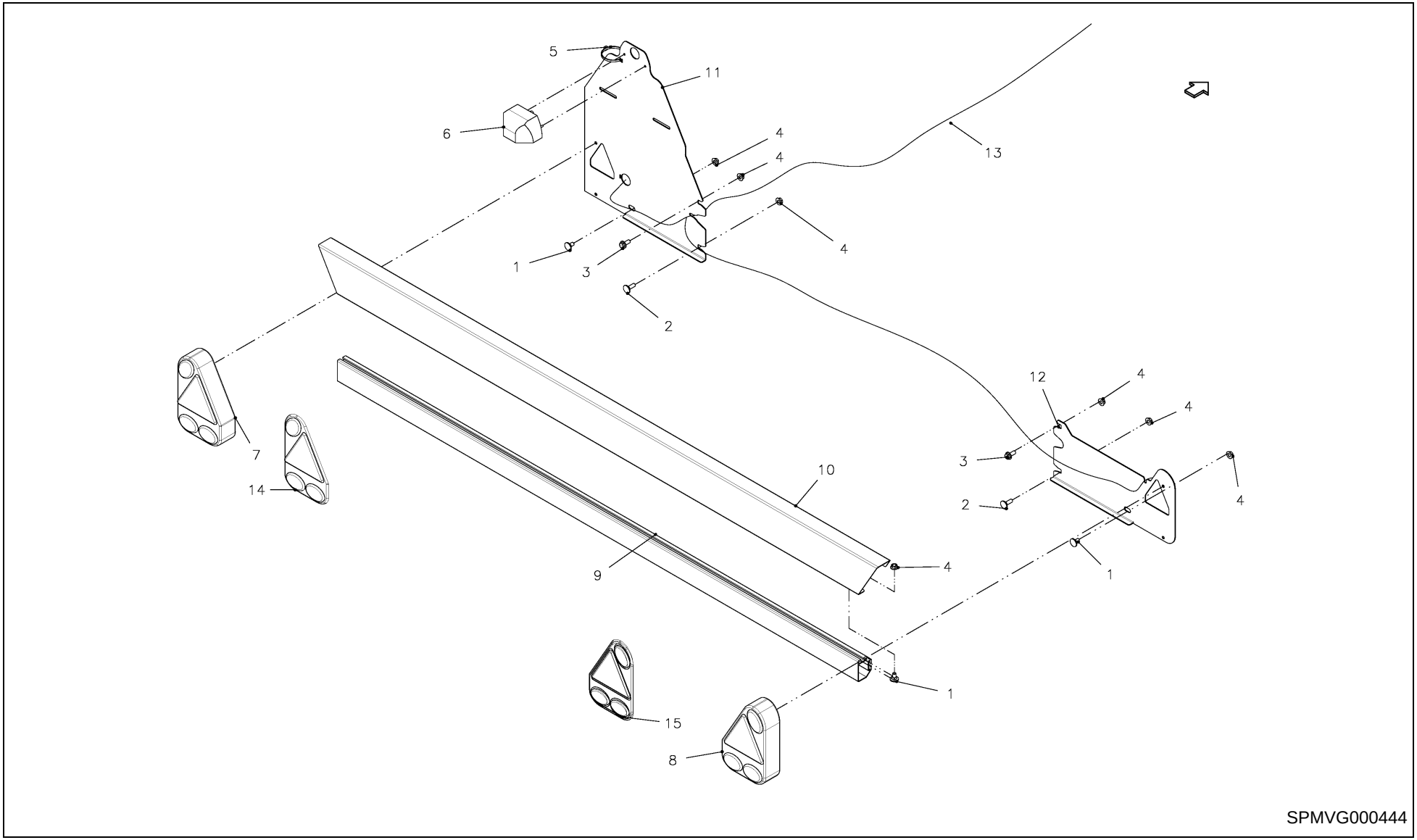
5
11
6
4
4
13
1
3
4
2
12
4
4
7
3
14
10
2
4
9
4
1
1
15
8
SPMVG000444

6490 / LIGHTING SET

PosNo.	Part No.	Qty.	Description	Remark
1	KG00638961	3	CARRIAGE BOLT M8X16 8.8	
2	KG00639161	2	CARRIAGE BOLT M8X25 8.8	
3	KG00981261	2	FLANGED BOLT M8X20 90	
4	KG01061261	7	LOCK NUT M8 8	
5	VGND9843	1	CABLE TIE	
6	VGRK27	1	LIGHTING	
7	VGRK3	1	LIGHT, TAIL, LH	
8	VGRK4	1	LIGHT, TAIL, RH	
9	VGRL541	1	PROFILE	
10	VGRL546K1	1	PROFILE	
11	VGRL547K0	1	HOLDER, LH	
12	VGRL548K0	1	HOLDER, RH	
13	VGRK26	1	CABLE	
14	VGRK29	1	GLASS, LIGHT, TAIL,	
15	VGRK30	1	GLASS, LIGHT, TAIL,	

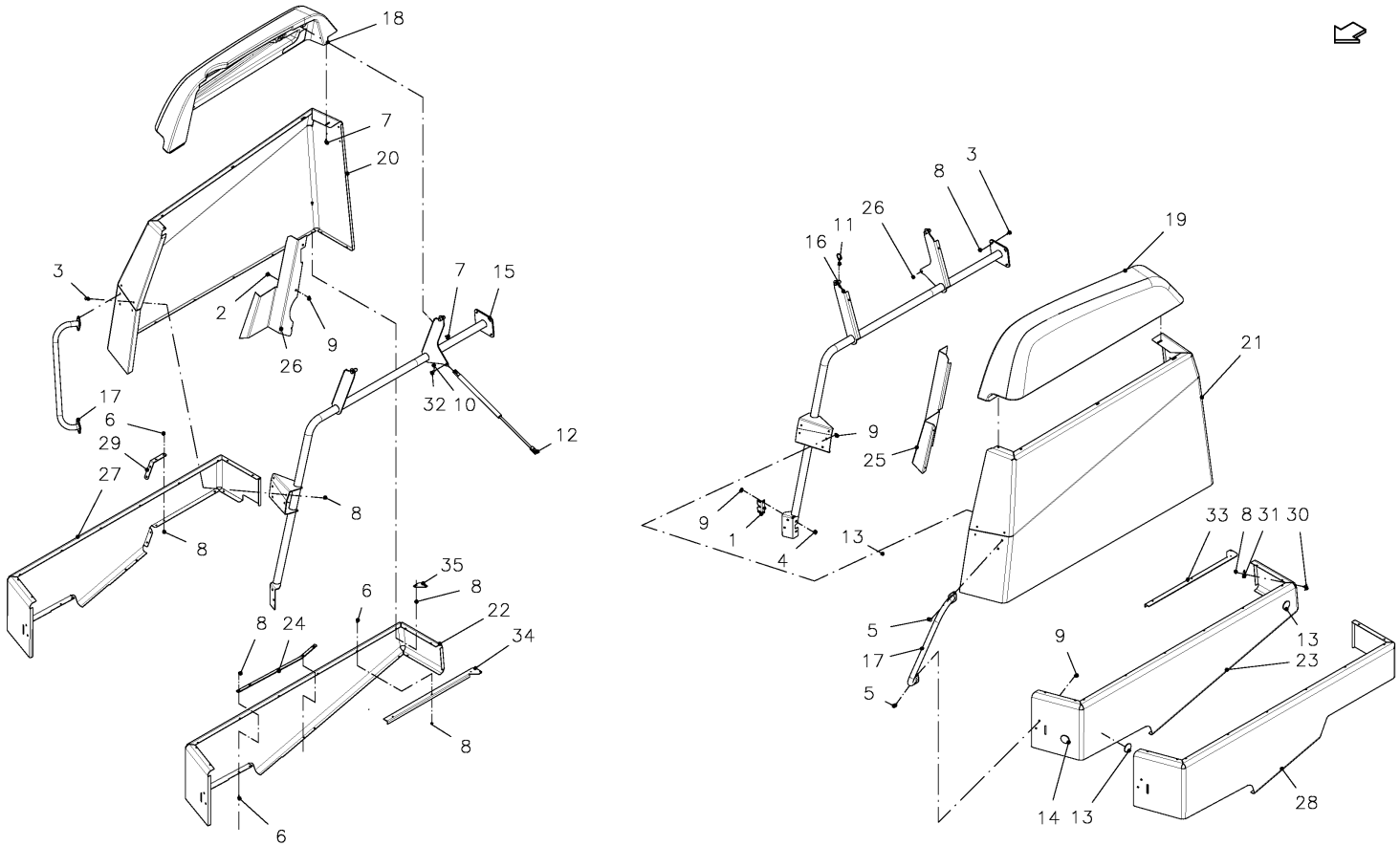
18
7
20
3
2
26
9
7
15
32 10
12
17
6
29
27
8
8
35
8
6
22
8 24
34
8
6
3
8
26
11
16
19
21
9
25
9
1
4
13
33 8 31 30
5
17
5
9
13
23
14 13
28
SPMVG000447

6490 / PROTECTION, CPL.

PosNo.	Part No.	Qty.	Description	Remark
1	VF16611457	2	LOCK	
2	VGGM152V	6	CARRIAGE BOLT	
3	KG00637061	14	CARRIAGE BOLT M6X16 8.8	
4	KG00638961	4	CARRIAGE BOLT M8X16 8.8	
5	KG00639061	8	CARRIAGE BOLT M8X20 8.8	
6	KG00980661	44	FLANGED BOLT M6X16 90	
7	KG00981161	14	FLANGED BOLT M8X16 90	
8	KG01061161	58	LOCK NUT M6 8	
9	KG01061261	18	LOCK NUT M8 8	
10	KG01249761	4	SPLIT PIN 3.2X20 ST	
11	VGND90003V	4	LINCH PIN FERGUSON-	
12	VGND90028	2	SPRING, GAS	
13	VGND9889	4	REFLECTOR, YELLOW	
14	VRR0298401	2	REFLECTOR, WHITE	
15	VGRL0376K0	1	FRAME, RH	
16	VGRL0377K0	1	FRAME, LH	
17	VGRL0401K0	2	BRACE, LH	
18	VGRL362	1	COVER, RH, TOP	
19	VGRL363	1	COVER, LH, TOP	
20	VGRL368K1	1	GUARD, PROTECT., RH, CTR.	
21	VGRL369K1	2	GUARD, PROTECT., LH, CTR.	
22	VGRL370K1	1	GUARD, PROTECT., RH, BOTTOM	NOT BALEPACK
23	VGRL371K1	1	GUARD, PROTECT., LH, BOTTOM	NOT BALEPACK
24	VGRL403K0	2	STRIP	
25	VGRL409K0	1	GUARD, PROTECT., RH	
26	VGRL410K0	1	GUARD, PROTECT., RH	
27	VGRV70K1	1	GUARD, PROTECT., RH, BOTTOM	BALEPACK
28	VGRV71K1	1	GUARD, PROTECT., LH, BOTTOM	BALEPACK
29	VGRV73V	2	STRIP	
30	VGWA01002K0	6	COVER,	
31	VGWA1038V	6	RING	
32	VGWA1040V	4	PIN	
33	VGWA1075K0	1	PLATE, LH	
34	VGWA1076K0	1	PLATE	
35	VGWA989V	6	PLATE	

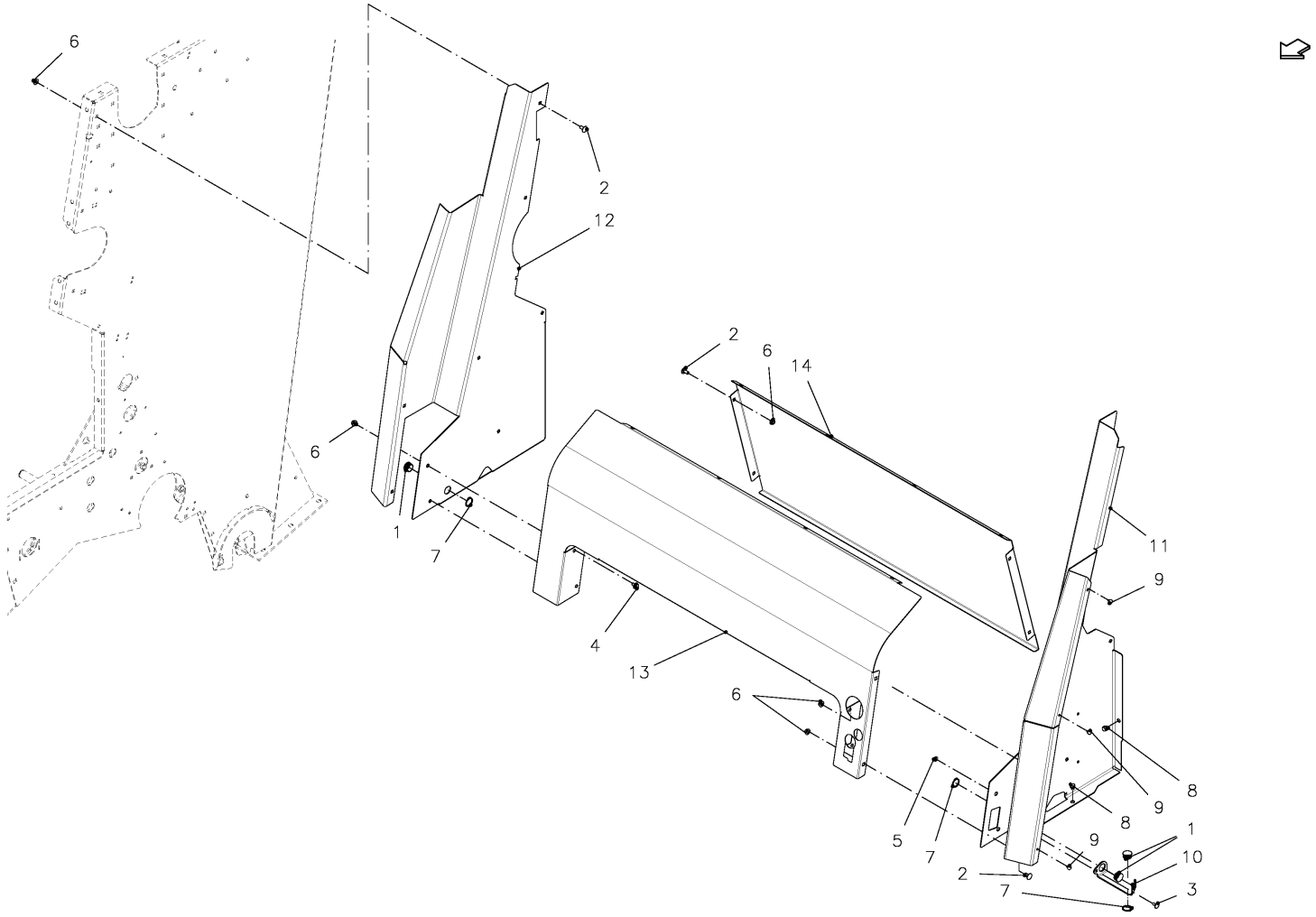

SPMVG000894

6490 / TWINE ONLY

PosNo.	Part No.	Qty.	Description	Remark
1	VG13128001V	3	GUIDE	
2	VGGM152V	20	CARRIAGE BOLT	
3	KG00637061	1	CARRIAGE BOLT M6X16 8.8	
4	KG00981061	1	FLANGED BOLT M8X12 90	
5	KG01061161	1	LOCK NUT M6 8	
6	KG01061261	22	LOCK NUT M8 8	
7	KG01108362	3	CIRCLIP-A 25 X 1.2	
8	VGND1461V	6	BOLT, TAPTITE	
9	VGND95049	3	PLUG, PLASTIC	
10	VGRL263V	2	PLATE	
11	VGRL551K0	1	GUARD, PROTECT., LH	
12	VGRL552K0	1	GUARD, PROTECT., RH	
13	VGRL642K0	1	PLATE	
14	VGRL643K0	1	PLATE	

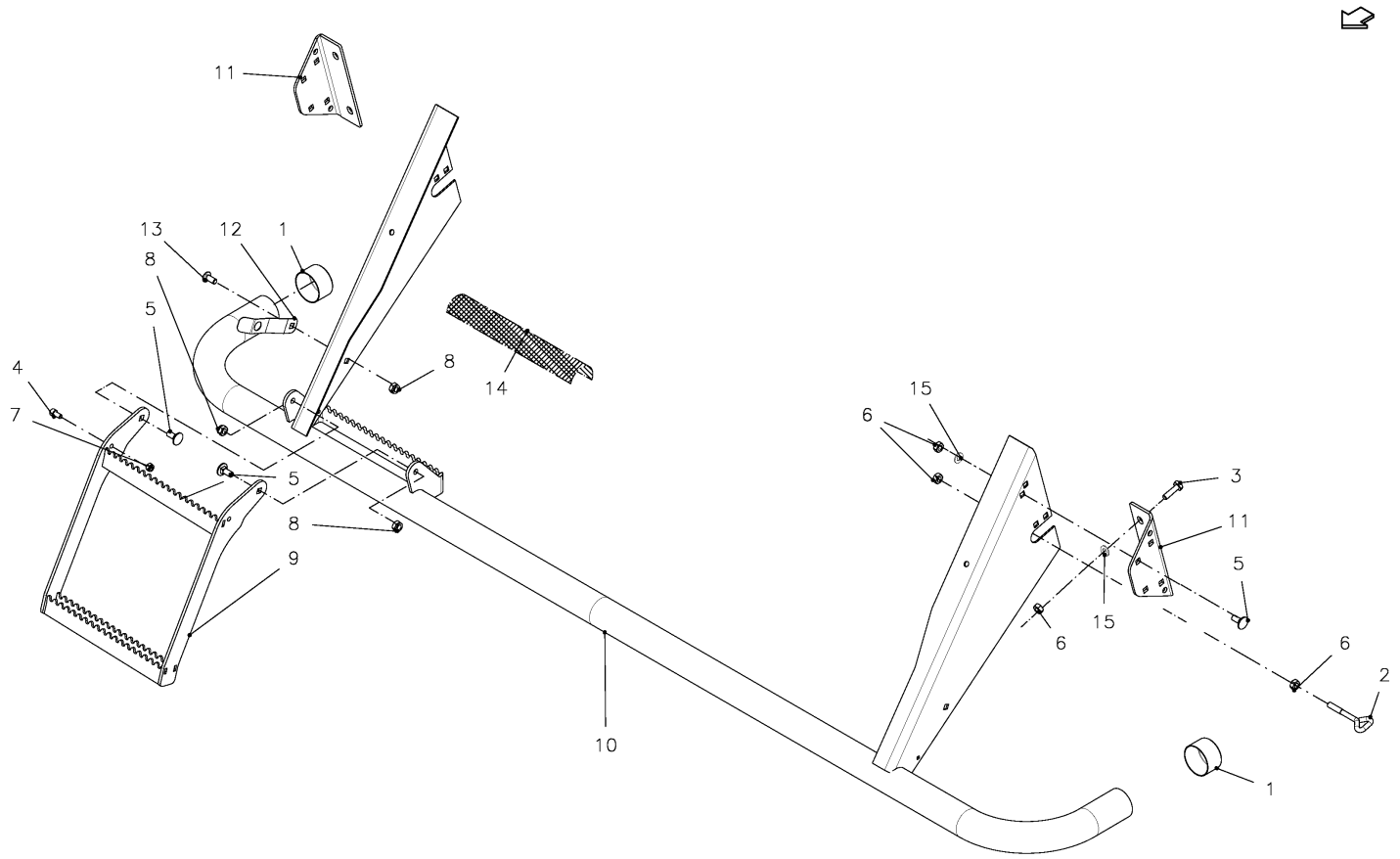

SPMVG000449

6490 / RAIL, GUARD

PosNo.	Part No.	Qty.	Description	Remark
1	VF16615400	2	CAP, PLASTIC	
2	VGBR739V	1	BOLT, EYE	
3	KG00474461	4	HEX. SCREW M10X35 8.8	
4	KG00544961	1	CHEESE HEAD SCREW M8X16 8.8	
5	KG00641461	6	CARRIAGE BOLT M10X25 8.8	
6	KG01052061	12	HEX. NUT M10 8	
7	KG01068761	1	LOCK NUT M8 10	
8	KG01068861	3	LOCK NUT M10 10	
9	VGRL0426K0	1	STEP	
10	VGRL0427K0	1	RAIL, GUARD	
11	VGRL404K0	2	SUPPORT	
12	VGRL505	1	SPRING, LEAF	
13	VGXD296V	1	CARRIAGE BOLT	
14	VR39000001	1	BANDE	
15	VGND3147V	8	RING	

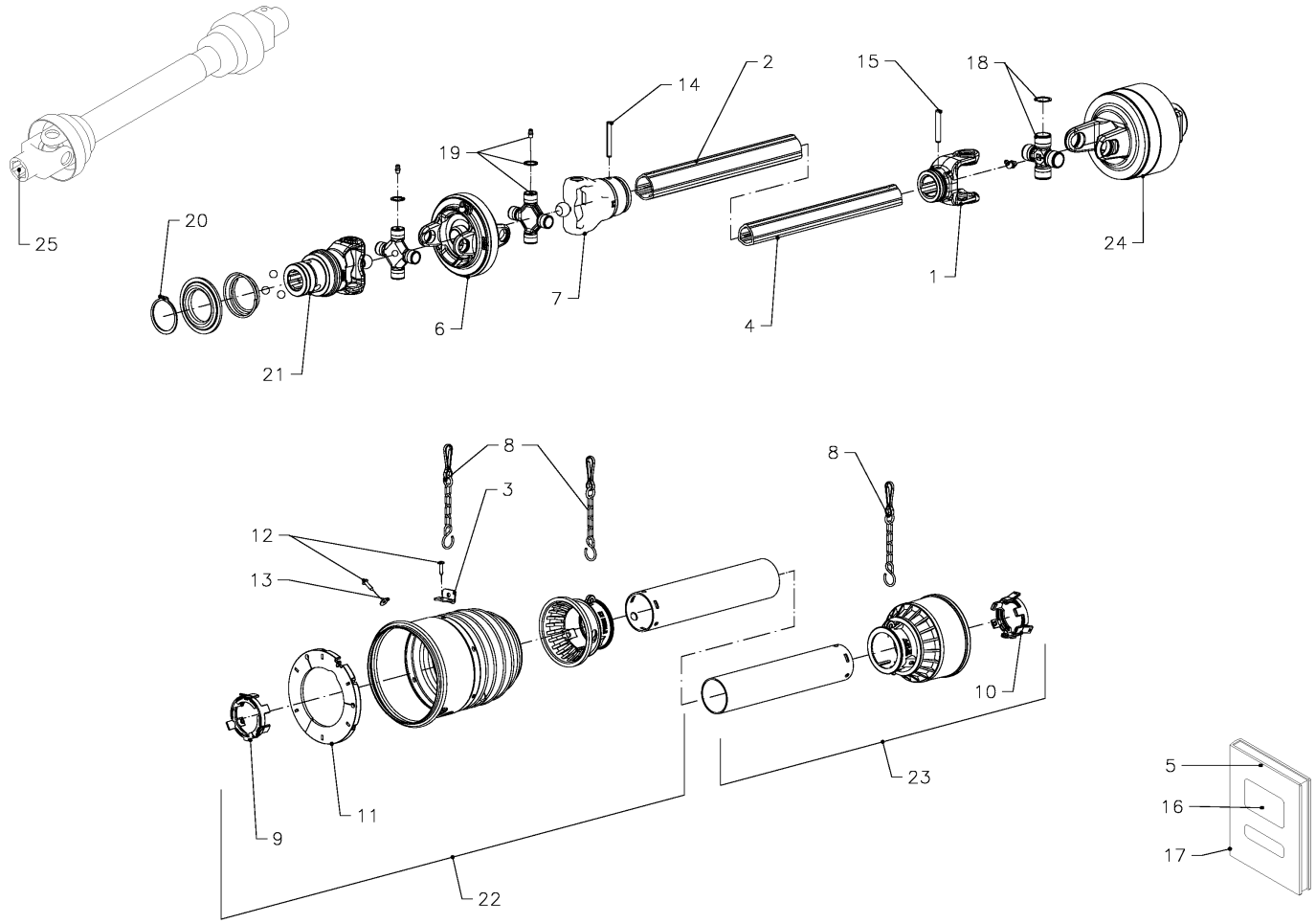

ND94119

6490 / SHAFT, UNIV. JOINT (WPU)

PosNo.	Part No.	Qty.	Description	Remark
1	BV204046852	1	YOKE	
2	BV225311060	1	PIPE, PROFILE, OUTER	
3	BV240001063	1	HOOK	
4	BV245101060	1	PIPE, PROFILE, INNER	
5	BV399143000	1	SAFETY DECAL	
6	BV5110E0052	1	YOKE, DOUBLE	
7	BV2150E6885	1	YOKE	
8	VG82.36.08	3	SAVETY CHAIN L=600 MM	
9	BV255040005R02	1	RING	
10	BV255040006R02	1	RING	
11	BV2550E0005R02	1	RING	
12	BV310001431R30	6	SCREW	
13	BV332001020R30	5	WASHER, PLAIN	
14	KG01192162	1	TENSION PIN 8X60	
15	BV341048000R10	1	PIN, TENSION	
16	BV399CEE051	1	SAFETY DECAL UNIV.JOINT SHAFT	
17	BV399CEE063	1	OPERATION MANUAL	
18	BV4120E0011R25	1	CROSS ASSY	
19	BV4120E0051R40	2	CROSS ASSY	
20	BV435000323R	1	LOCK ASSY	
21	BV5730E0384	1	YOKE, QUICK-DISCONNECT	
22	BV5FE4121W1CE	1	GUARD HALF, OUTER	
23	BV5FI4121FFCE	1	GUARD HALF, INNER	
24	BV6WE154003R	1	COUPLING	
25	VGND94119	1	SHAFT, UNIV. JOINT	

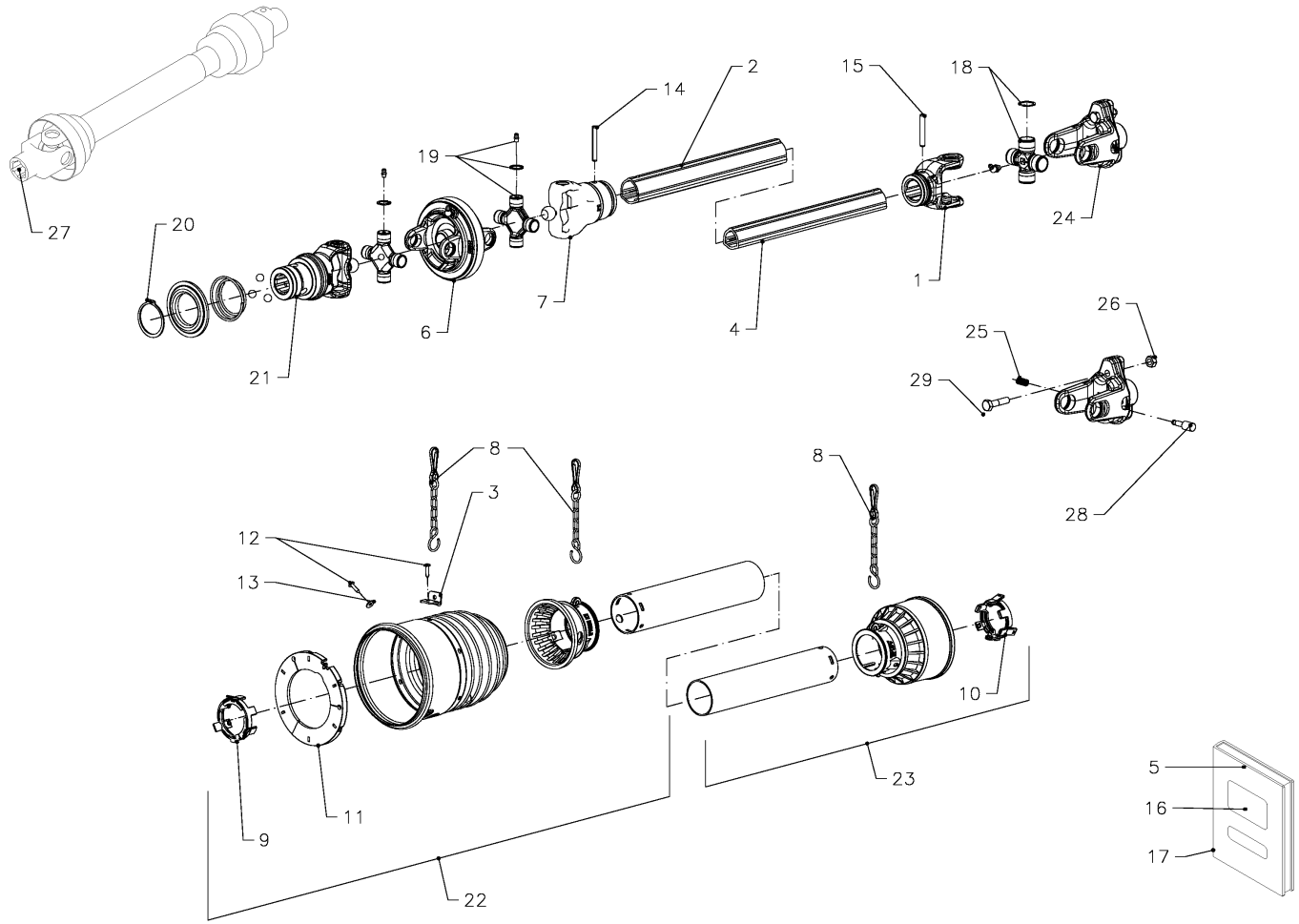
27
20
21
19
6
14
7
2
4
15
1
18
24
26
25
29
28
8
3
12
13
9
11
22
8
10
23
5
16
17

ND94120

6490 / SHAFT, UNIV. JOINT AUTOPLUS

PosNo.	Part No.	Qty.	Description	Remark
1	BV204046852	1	YOKE	
2	BV225311060	1	PIPE, PROFILE, OUTER	
3	BV240001063	1	HOOK	
4	BV245101060	1	PIPE, PROFILE, INNER	
5	BV399143000	1	SAFETY DECAL	
6	BV5110E0052	1	YOKE, DOUBLE	
7	BV2150E6885	1	YOKE	
8	VG82.36.08	3	SAVETY CHAIN L=600 MM	
9	BV255040005R02	1	RING	
10	BV255040006R02	1	RING	
11	BV2550E0005R02	1	RING	
12	BV310001431R30	2	SCREW	
13	BV332001020R30	1	WASHER, PLAIN	
14	KG01192162	1	TENSION PIN 8X60	
15	BV341048000R10	1	PIN, TENSION	
16	BV399CEE051	1	SAFETY DECAL UNIV.JOINT SHAFT	
17	BV399CEE063	1	OPERATION MANUAL	
18	BV4120E0011R25	1	CROSS ASSY	
19	BV4120E0051R40	2	CROSS ASSY	
20	BV435000323R	1	LOCK ASSY	
21	BV5730E0384	1	YOKE, QUICK-DISCONNECT	
22	BV5FE4121W1CE	1	GUARD HALF, OUTER	
23	BV5FI4121FFCE	1	GUARD HALF, INNER	
24	BV6060E0309R	1	CLUTCH, SHEAR BOLT	
25	BV403000001R10	2	PIN, PUSH	
26	BV432000053R05	2	SHEAR BOLT	
27	VGND94120	1	SHAFT, UNIV. JOINT	

6490 / SHAFT, UNIV. JOINT (R+14-OC + XL-R)

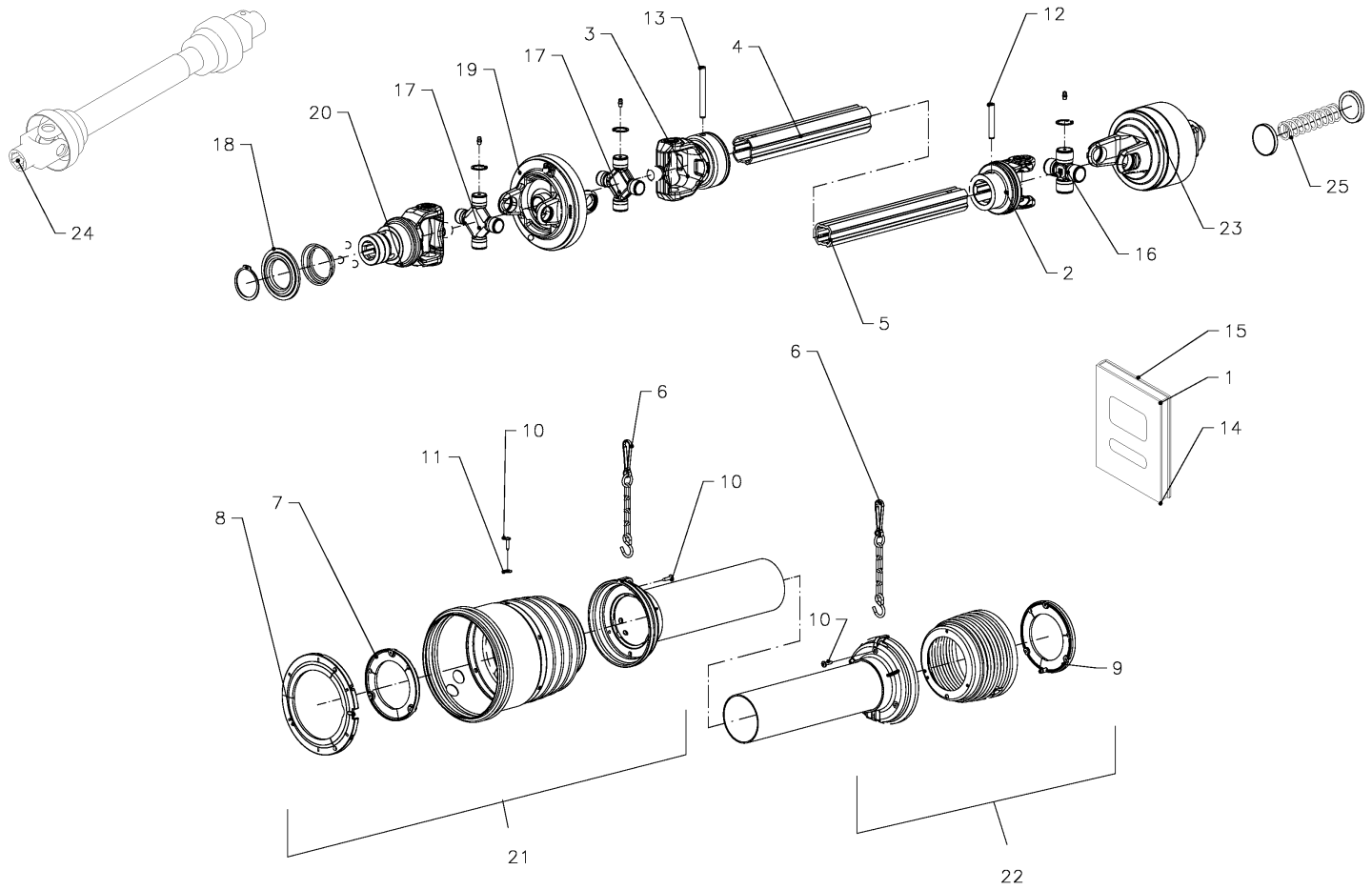

ND94117

6490 / SHAFT, UNIV. JOINT (R+14-OC + XL-R)

PosNo.	Part No.	Qty.	Description	Remark
1	BV399143000	1	SAFETY DECAL	
2	BV204S66854	1	YOKE	
3	BV2150G6871	1	YOKE	
4	BV2253Q1055	1	PIPE, PROFILE, OUTER	
5	BV2453N1070	1	PIPE, PROFILE, INNER	
6	VG82.36.08	2	SAVETY CHAIN L=600 MM	
7	BV2550G0001R02	1	RING	
8	BV2550G0024R02	1	RING	
9	BV2550G0002R02	1	RING	
10	BV310001431R30	3	SCREW	
11	BV332001020R30	1	WASHER, PLAIN	
12	VG61.05.04	1	PIN, TENSION	
13	BV341103000R10	1	PIN, TENSION	
14	BV399CEE051	1	SAFETY DECAL UNIV.JOINT SHAFT	
15	BV399CEE053	1	OPERATION MANUAL	
16	BV4120G0012R40	1	CROSS ASSY	
17	BV4120G0051R30	2	CROSS ASSY	
18	BV435000323R	1	LOCK ASSY	
19	BV5110G0061	1	YOKE, DOUBLE	
20	BV5730G0384	1	YOKE, QUICK-DISCONNECT	
21	BV5ES6121CEWS	1	GUARD HALF, OUTER	
22	BV5IS6121CEWS	1	GUARD HALF, INNER	
23	BV6WG159003R	1	COUPLING, CAM	
24	VGND94117	1	SHAFT, UNIV. JOINT	
25	BV421155901R	1	SPRING SET	1900 Nm

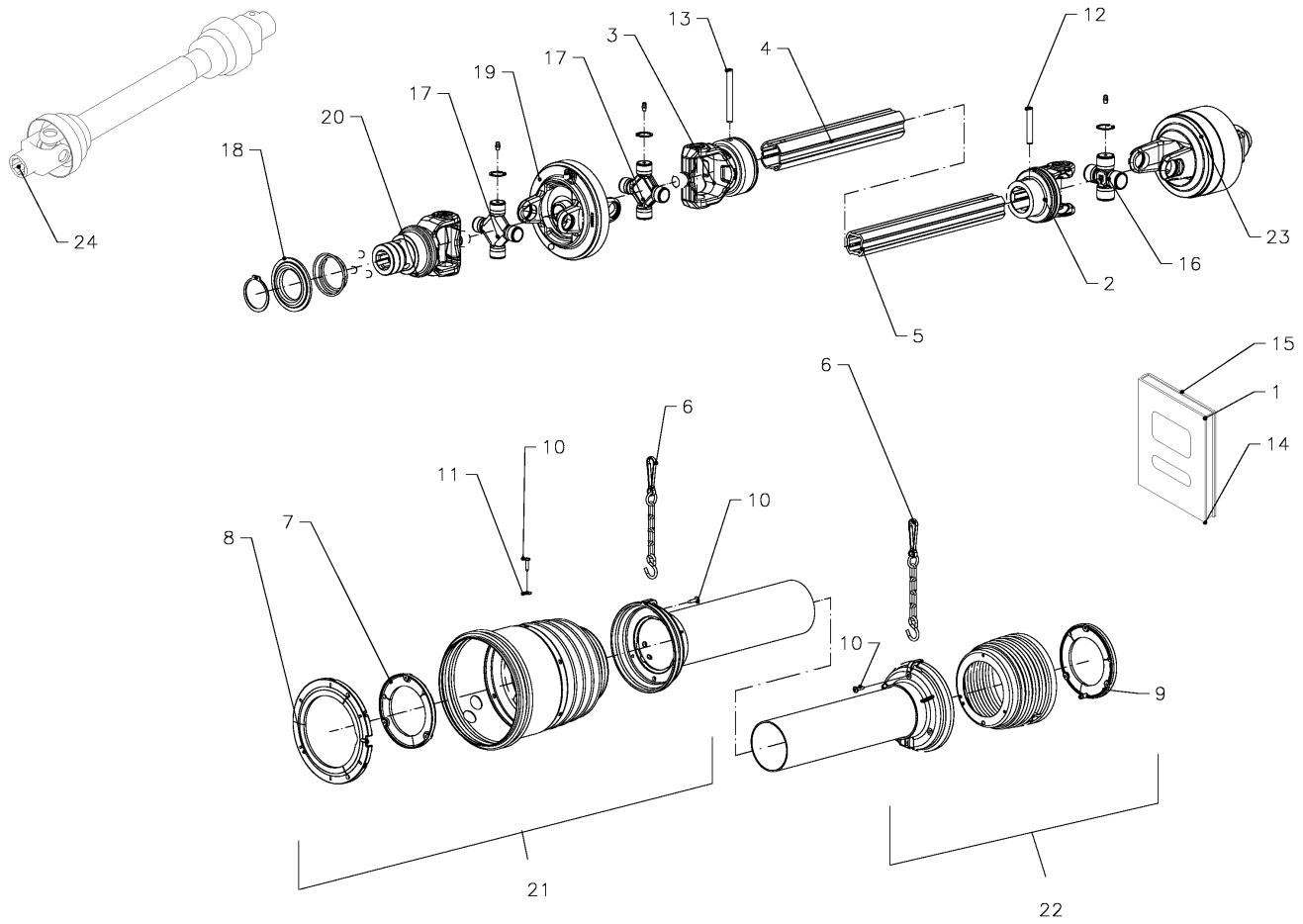

ND94118

6490 / SHAFT, UNIV. JOINT (23-OC)

PosNo.	Part No.	Qty.	Description	Remark
1	BV399143000	1	SAFETY DECAL	
2	BV204S66854	1	YOKE	
3	BV2150G6871	1	YOKE	
4	BV2253Q1055	1	PIPE, PROFILE, OUTER	
5	BV2453N1070	1	PIPE, PROFILE, INNER	
6	VG82.36.08	2	SAVETY CHAIN L=600 MM	
7	BV2550G0001R02	1	RING	
8	BV2550G0024R02	1	RING	
9	BV2550G0002R02	1	RING	
10	BV310001431R30	3	SCREW	
11	BV332001020R30	1	WASHER, PLAIN	
12	VG61.05.04	1	PIN, TENSION	
13	BV341103000R10	1	PIN, TENSION	
14	BV399CEE051	1	SAFETY DECAL UNIV.JOINT SHAFT	
15	BV399CEE053	1	OPERATION MANUAL	
16	BV4120G0012R40	1	CROSS ASSY	
17	BV4120G0051R30	2	CROSS ASSY	
18	BV435000323R	1	LOCK ASSY	
19	BV5110G0061	1	YOKE, DOUBLE	
20	BV5730G0384	1	YOKE, QUICK-DISCONNECT	
21	BV5ES6121CEWS	1	GUARD HALF, OUTER	
22	BV5IS6121CEWS	1	GUARD HALF, INNER	
23	BV6WG161003R	1	COUPLING	
24	VGND94118	1	SHAFT, UNIV. JOINT	

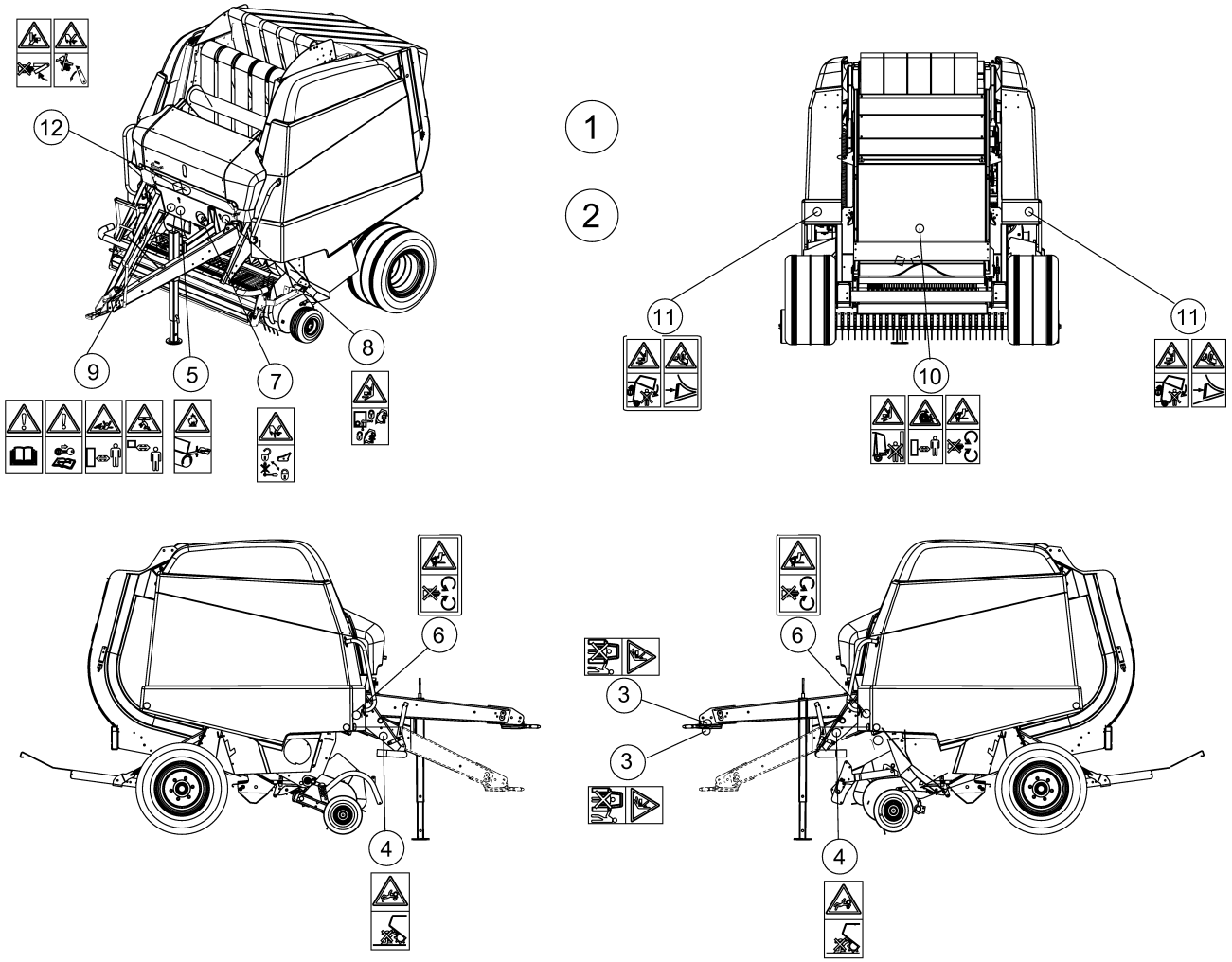

TR003096

6490 / DECAL SCHEME

PosNo.	Part No.	Qty.	Description	Remark
1	VGTR003273	1	DECAL SET	KVERNELAND LABELING
2	VGTR003096	1	DECAL SET	SAFETY DECAL SET
3	VGTR2011	1	CRUSHING BODY STAY CLEAR OF	
4	VGTR2035	1	SAFETY DECAL	
5	VGTR2037	1	DECAL	
6	VGTR2071	2	SAFETY DECAL	
7	VGTR2073	1	DECAL	
8	VGTR2077	1	SAFETY DECAL	
9	VGTR3183	1	DECAL	
10	VGTR3313	1	DECAL	
11	VGTR3314	1	DECAL	
12	VGTR3315	1	DECAL	

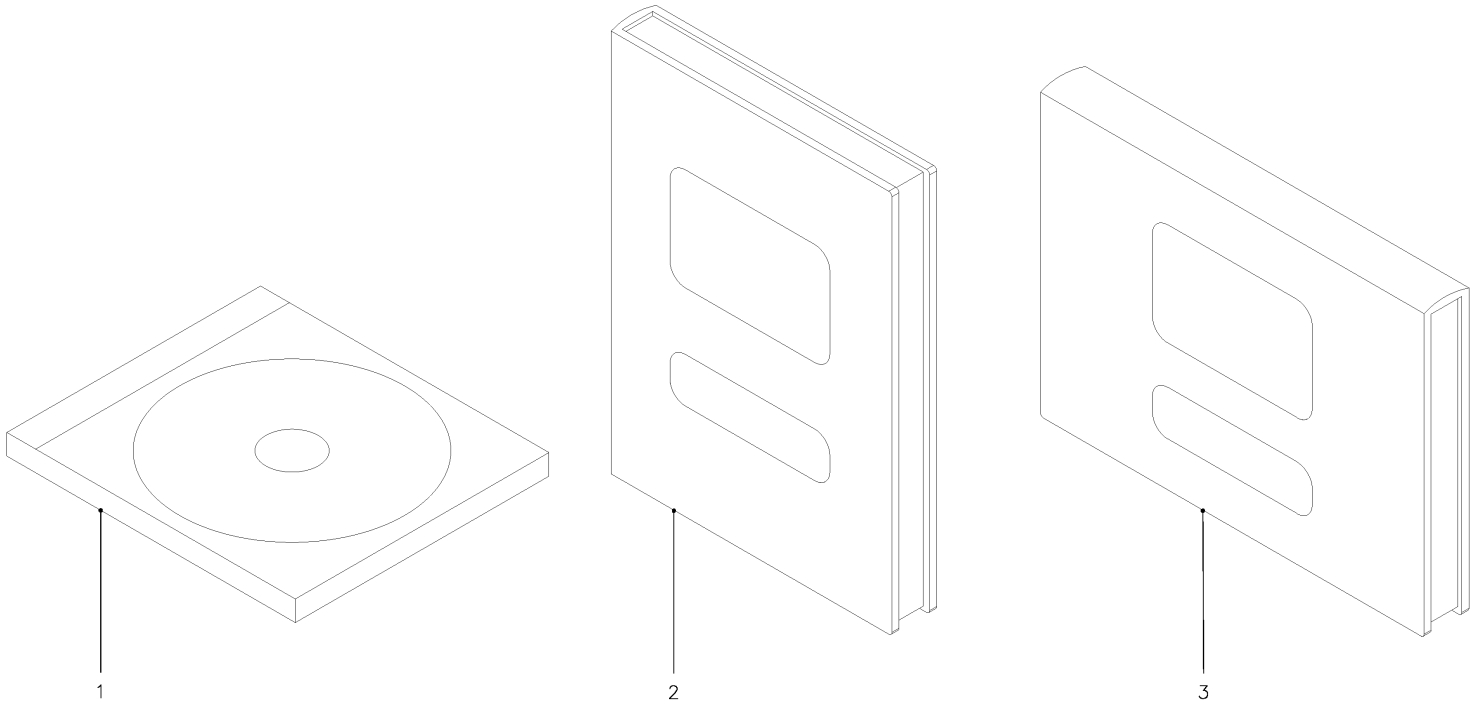

SPMVG000309

6490 / DOCUMENTATION

PosNo.	Part No.	Qty.	Description	Remark
1	KK742357	1	SPARE PARTS CD-ROM	
2	VGG0704RKL(8)	1	OPERATION MANUAL	
3	VGP0902RL(8)	1	PARTS BOOK	

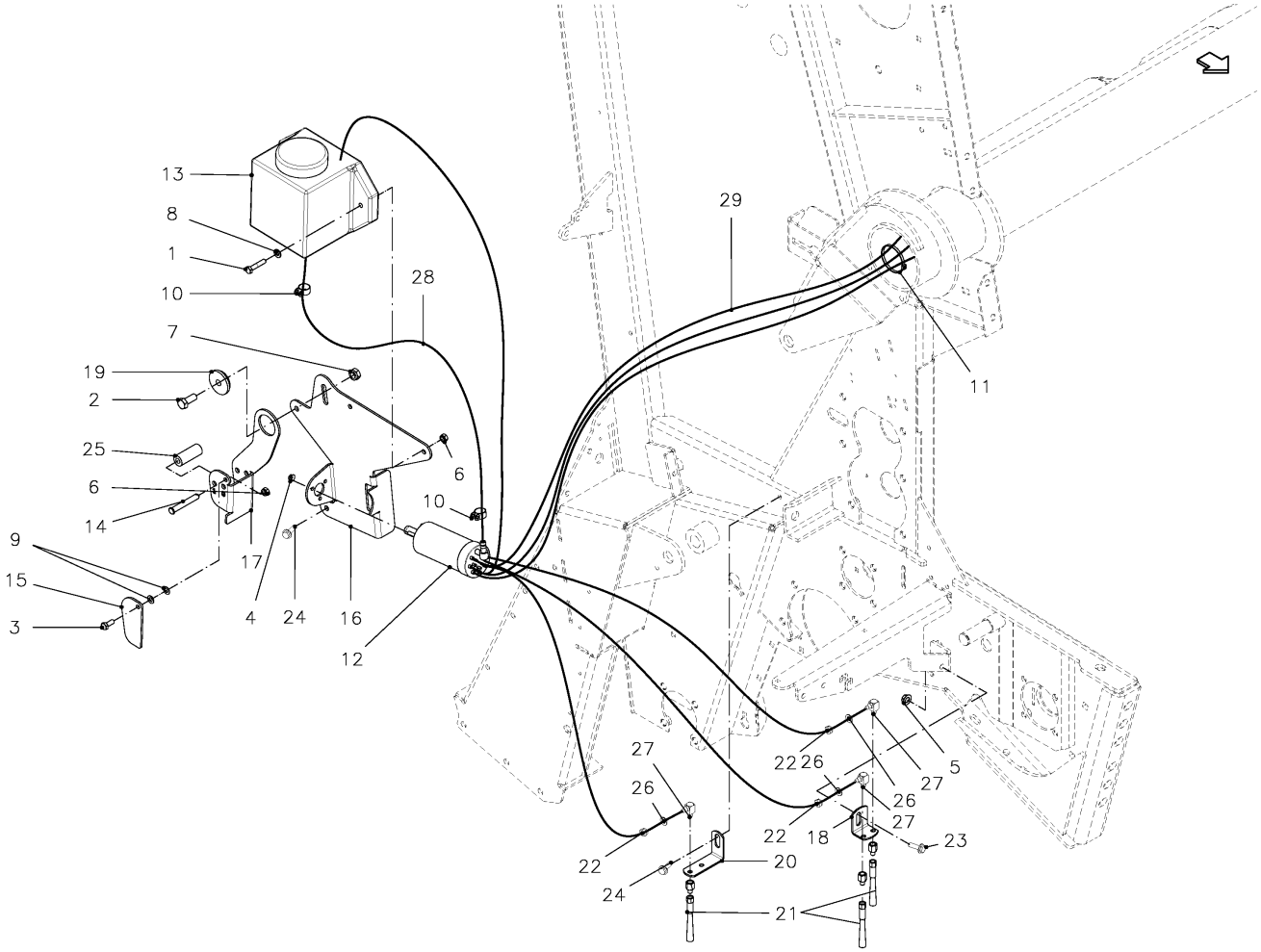

SPMVG000413

6490 / LUBRICATION SYSTEM

PosNo.	Part No.	Qty.	Description	Remark
1	KG00353261	2	HEX. BOLT M8X40 8.8	
2	KG00457261	1	HEX. SCREW M12X30 10.9	
3	KG00471961	1	HEX. SCREW M8X20 8.8	
4	KG01061161	3	LOCK NUT M6 8	
5	KG01061361	1	LOCK NUT M10 8	
6	KG01068761	3	LOCK NUT M8 10	
7	KG01068961	1	LOCK NUT M12 10	
8	KG01267361	2	WASHER M8	
9	KG01294162	2	DISC SPRING 16X8.2X0.9	
10	VGND9419	2	CLAMP, WORM DRIVE	
11	VGND9843	7	CABLE TIE	
12	VGRL00280	1	PUMP-UNIT	
13	VGRL00281	1	RESERVOIR, OIL	
14	VGRL282V	1	PIN	
15	VGRL309V	1	PLATE	
16	VGRL506K0	1	PLATE	
17	VGRL507K0	1	HOLDER	
18	VGRL510V	1	BRACE	
19	VGWA528V	1	RING	
20	VGWA857V	1	BRACE	
21	VR38228059	3	BRUSH, LUBRICATION	
22	VR38279004	3	NUT	
23	VGND1221V	1	SCREW, KNURLED STUD	
24	VGND1461V	3	BOLT, TAPTITE	
25	VGND95059	1	SLEEVE, PLASTIC	
26	VRR0480114	3	RING	
27	VR38228055	3	ELBOW COUPLING	
28	VGND95067	1	HOSE, PLASTIC	
29	VGRL290	1	LINE, LUBRICATION	

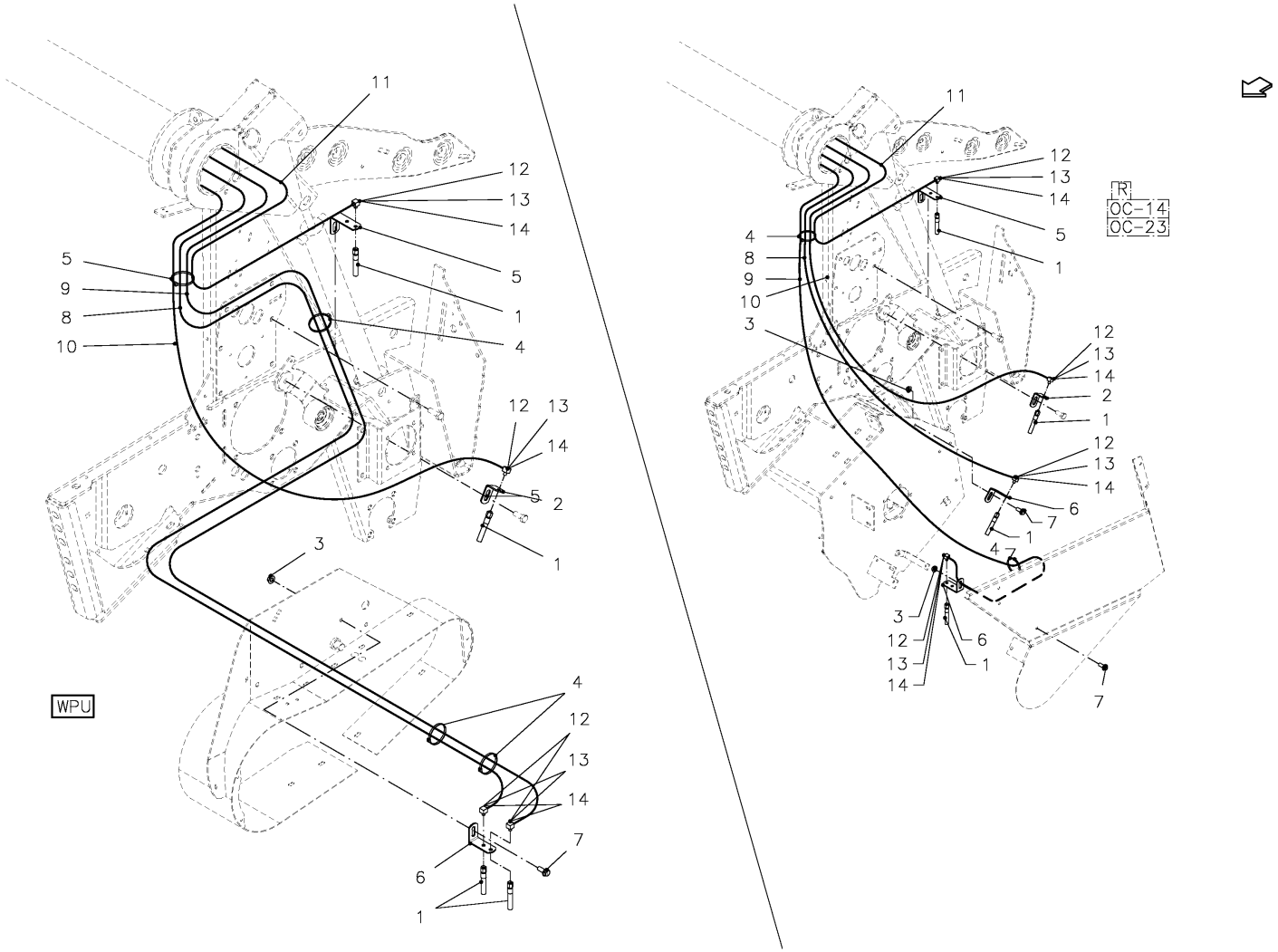

SPMVG000921

6490 / LUBRICATION SYSTEM

PosNo.	Part No.	Qty.	Description	Remark
1	VR38228059	4	BRUSH, LUBRICATION	
2	VGBR660V	1	HOLDER	
3	KG01061361	2	LOCK NUT M10 8	
4	VGND9843	4	CABLE TIE	
5	VGWA857V	2	BRACE	
6	VGWA859V	2	BRACE	
7	VGND1221V	2	SCREW, KNURLED STUD	
8	VGRL290	1	LINE, LUBRICATION	
9	VGRL290	1	LINE, LUBRICATION	
10	VGRL290	1	LINE, LUBRICATION	
11	VGRL290	1	LINE, LUBRICATION	
12	VR38228055	4	ELBOW COUPLING	
13	VR38279004	4	NUT	
14	VRR0480114	4	RING	

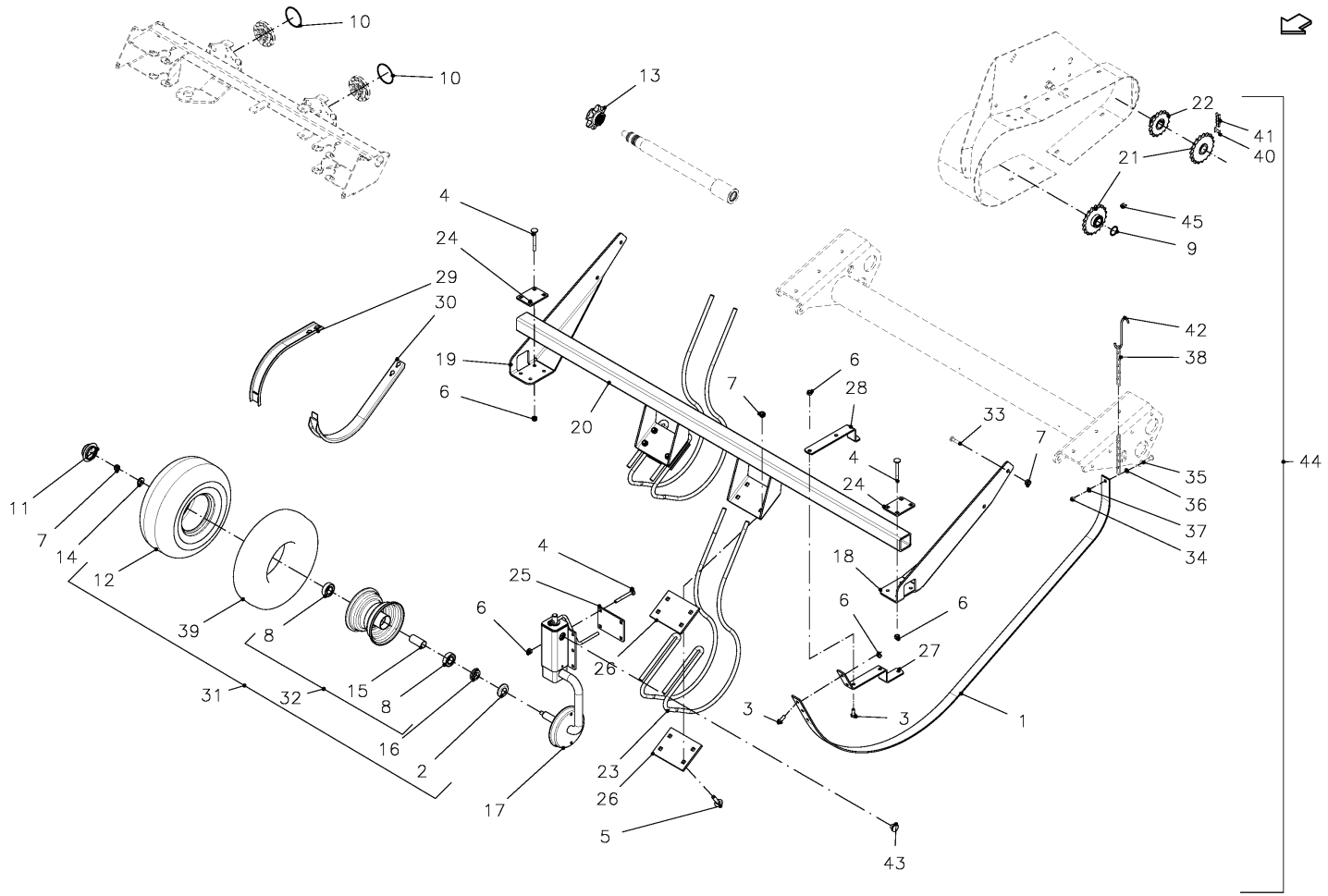

SPMVG000474

6490 / FLAX KIT

PosNo.	Part No.	Qty.	Description	Remark
1	VG19154022	1	SPRING, LEAF	
2	VGBP402V	1	COVER, DUST	
3	KG00474200	2	HEX. SCREW M10X25 8.8	
4	KG00642661	12	CARRIAGE BOLT M10X90 8.8	
5	KG00645261	8	CARRIAGE BOLT M12X50 8.8	
6	KG01068861	18	LOCK NUT M10 10	
7	KG01068961	13	LOCK NUT M12 10	
8	KG01378900	2	BALL BEARING 6205-2RS	
9	VGMT00310	1	SHIM SET	WPU ONLY
10	VGND6127	2	O-RING	
11	VGND9620V	1	COVER, WHEEL	
12	VGND9778	1	TYRE	
13	VGRL693	1	SPROCKET	
14	VGTH100V	1	RING	
15	VGTH66	1	SLEEVE, SPACING	
16	VGTH9	1	RING, DUST	
17	VGWA002189K0	1	WHEEL, SUPPORT, CPL.	
18	VGWA01851K0	1	SUPPORT, LH	
19	VGWA01852K0	1	SUPPORT, RH	
20	VGWA01853K0	1	FRAME	
21	VGWA0611	2	SPROCKET	WPU ONLY
22	VGWA0612	1	SPROCKET	WPU ONLY
23	VGWA1235	4	TINE, FLAX	
24	VGWA1855K0	2	PLATE	
25	VGWA2188K0	1	PLATE	
26	VGWA855	2	PLATE	
27	VGWA860	1	BRACE	
28	VGWA861	1	STRIP	
29	VGWA862	10	GUIDE	
30	VGWA863	10	GUIDE	
31	VGND9780	1	WHEEL, CPL.	
32	VGND9827	1	RIM	
33	KG00476461	1	HEX. SCREW M12X25 8.8	
34	KG01051961	1	HEX. NUT M8 8	
35	KG00472161	1	HEX. SCREW M8X25 8.8	
36	KG01267361	1	WASHER M8	
37	KG01281661	1	SPRING WASHER M8	
38	VG17662018V	2	CHAIN	
39	VGND9779	1	AIR CHAMBER	
40	VG37658602	1	LINK, OFFSET, DOUBLE	WPU ONLY

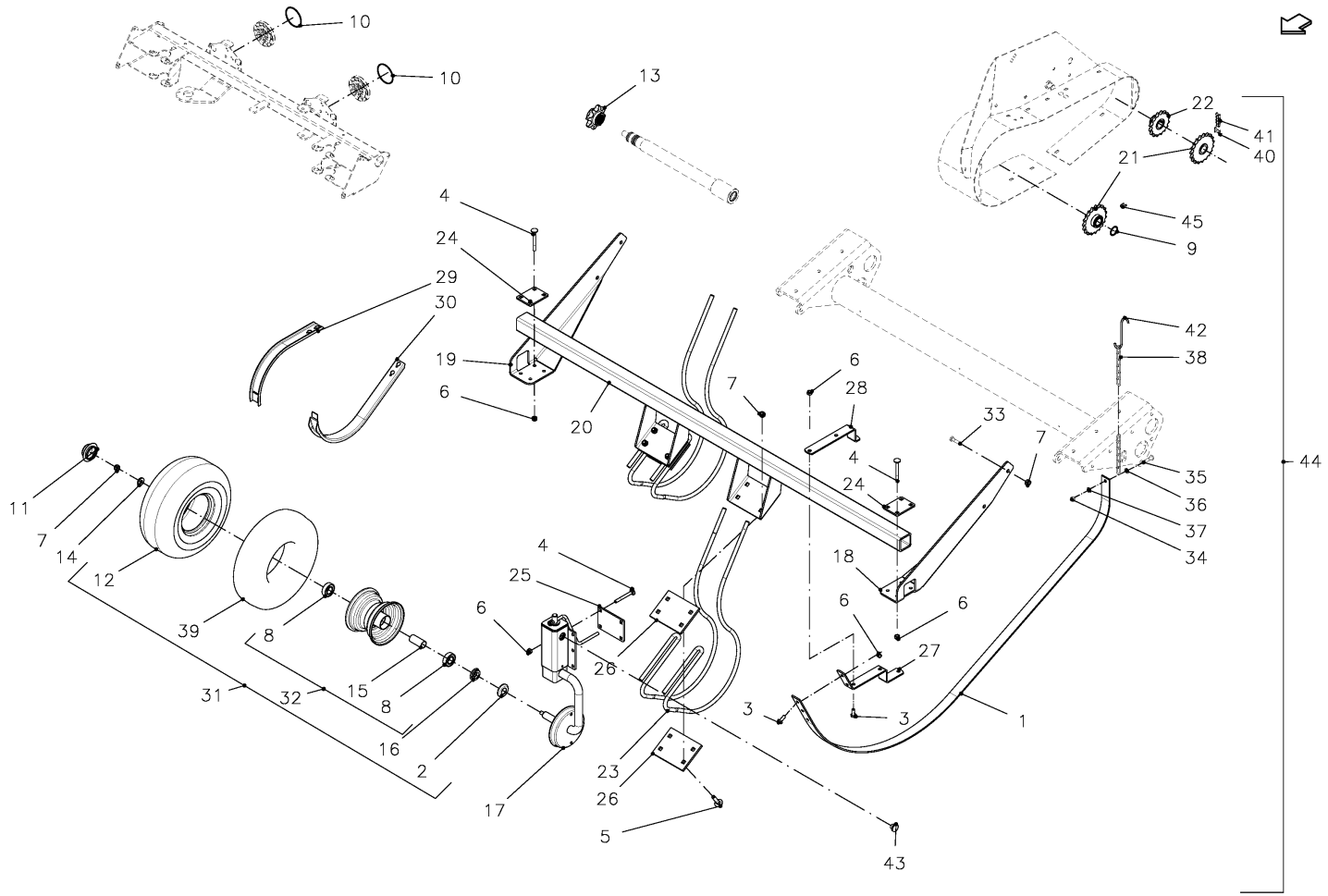

SPMVG000474

6490 / FLAX KIT

PosNo.	Part No.	Qty.	Description	Remark
41	VGND9346	1	LINK, SIMPL.	WPU ONLY
42	VG19077005V	1	HOOK	
43	VGND95055	1	CAP	
44	ACCESSOIRE	1	PLEASE CONTACT YOUR DEALER	
45	VGND9751	1	LINK, SIMPL.	WPU ONLY

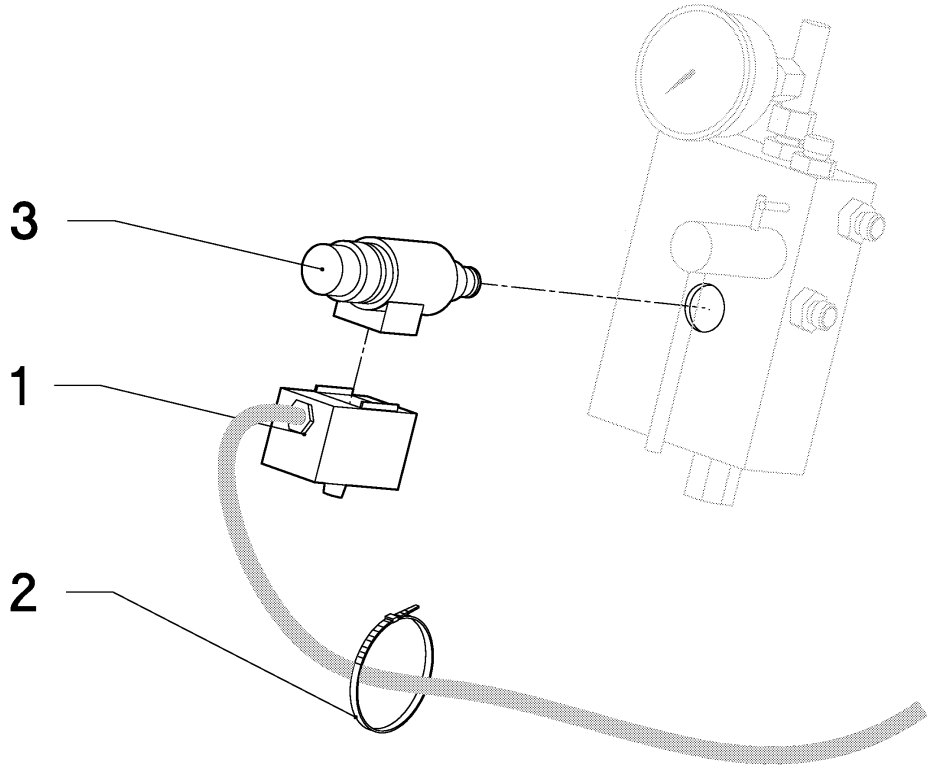

02RL01_68

6490 / MIXED CHAMBER OPTION

PosNo.	Part No.	Qty.	Description	Remark
1	VNB0274673	1	CABLE VALVE LED L=0.7M	
2	VGND9843	1	CABLE TIE	
3	VGRL00518	1	PRESSURE VALVE, PROPORTIONAL	

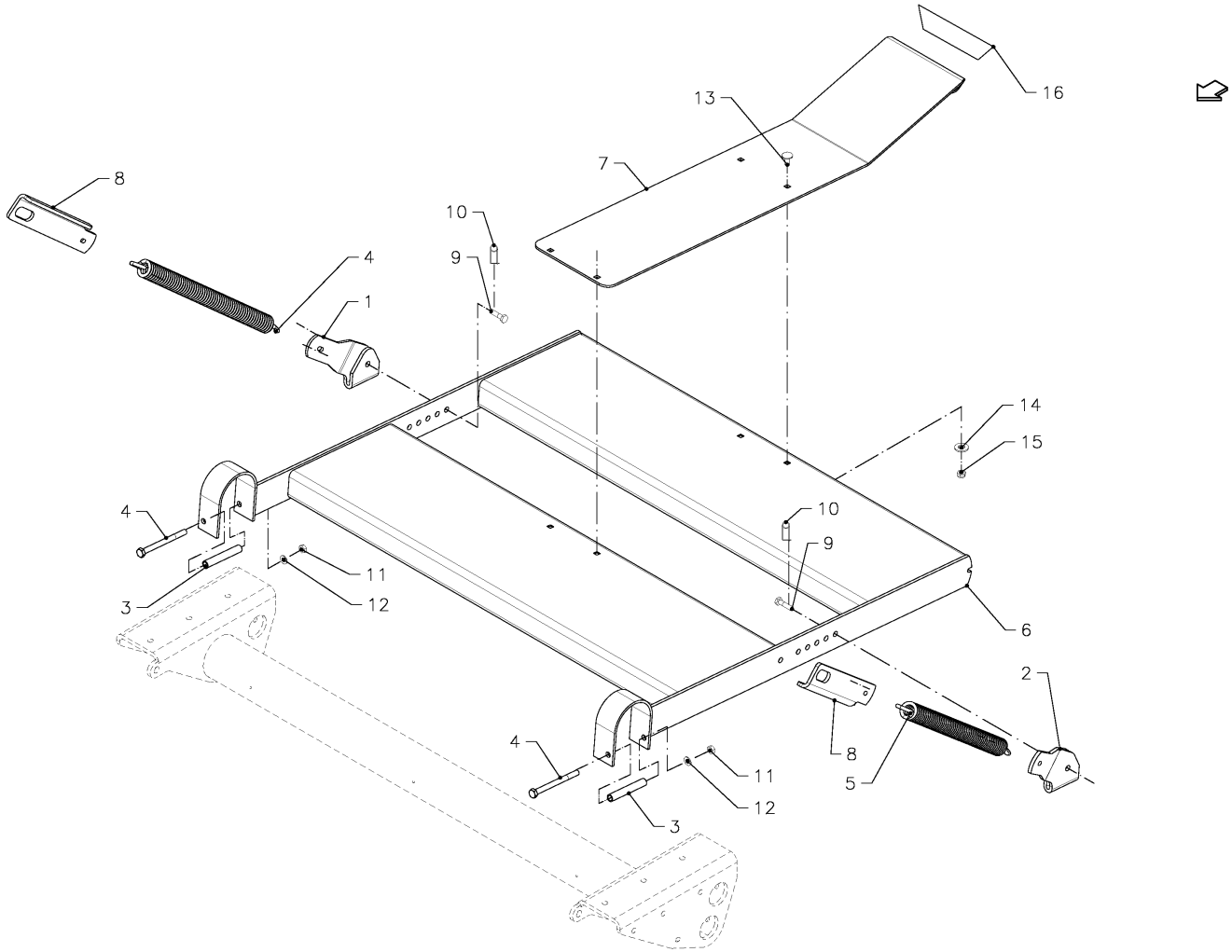

SPMVG000069

6490 / RAMP, BALE, CPL.

PosNo.	Part No.	Qty.	Description	Remark
1	VGBR682	1	HOLDER, RH	
2	VGBR683	1	HOLDER, LH	
3	VGBR692V	2	PIPE	
4	KG00358761	2	HEX. BOLT M12X140 8.8	
5	VGPZ264K0	2	SPRING, TENSION	
6	VGWA0614	1	GUIDE	
7	VGWA831	1	SPRING, LEAF	
8	VGWA917	2	HOLDER	
9	VGBP505V	2	PIN	
10	VGPZ455V	2	SAFETY PIN	
11	KG01052161	2	HEX. NUT M12 8	
12	VGND3148V	2	CIRCLIP	
13	KG00641561	4	CARRIAGE BOLT M10X30 8.8	
14	VGHK116V	4	RING	
15	KG01068861	4	LOCK NUT M10 10	
16	VGTR996	1	DECAL STRIP	

6490 / HITCH CLEVIS, CPL.

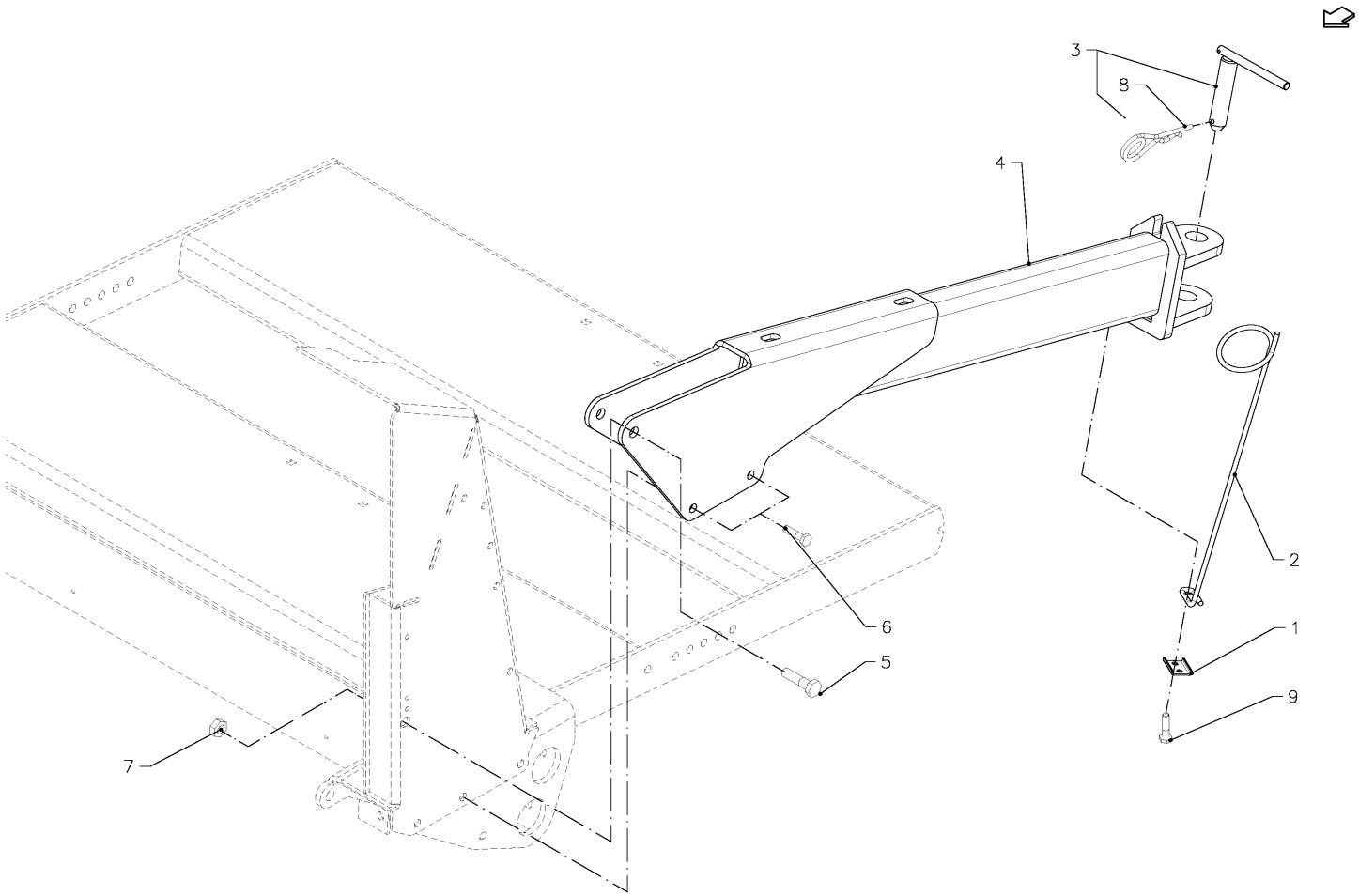

SPMVG000154

6490 / HITCH CLEVIS, CPL.

PosNo.	Part No.	Qty.	Description	Remark
1	VG19017027V	1	BRACE	
2	VG19157033V	1	STAY	
3	VGMH00356V	1	PIN ASSY	
4	VGWA0784	1	HITCH CLEVIS	
5	KG00362761	1	HEX. BOLT M16X100 8.8	
6	KG00476761	4	HEX. SCREW M12X40 8.8	
7	KG01069161	1	LOCK NUT M16 10	
8	VGPZ11V	1	SPRING CLIP	
9	KG01000861	2	FLANGED BOLT M8X25	

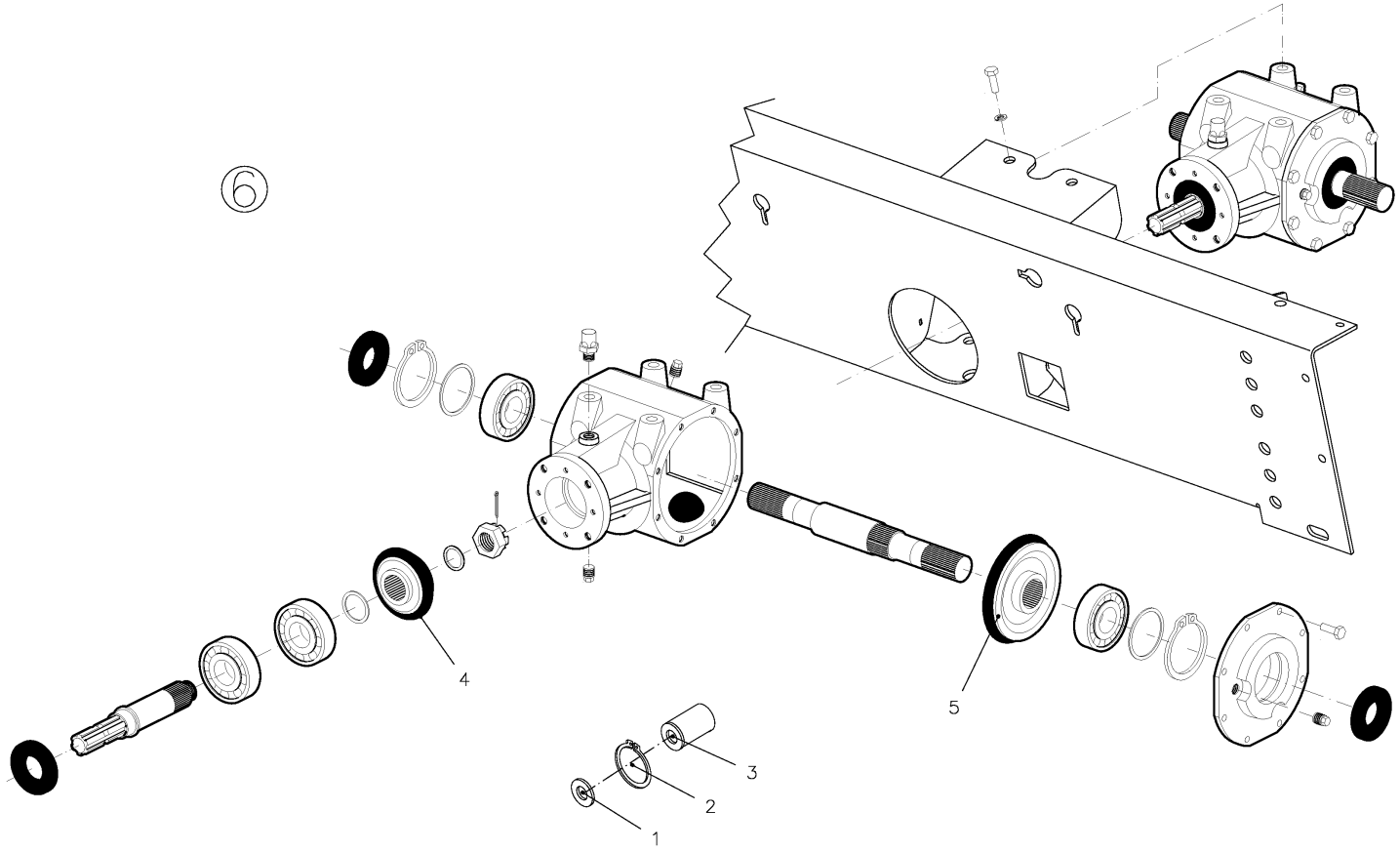

SPMVG000498

6490 / 1000 RPMSET

PosNo.	Part No.	Qty.	Description	Remark
1	VGGS0089	1	SHIM SET	
2	KG01119100	1	CIRCLIP-B 80 X 4	
3	BV421155401R	1	SPRING SET	
4	VGWA1494	1	WHEEL, TOOTHED	
5	VGWA1495	1	WHEEL, TOOTHED	
6	ACCESSOIRE	1	PLEASE CONTACT YOUR DEALER	

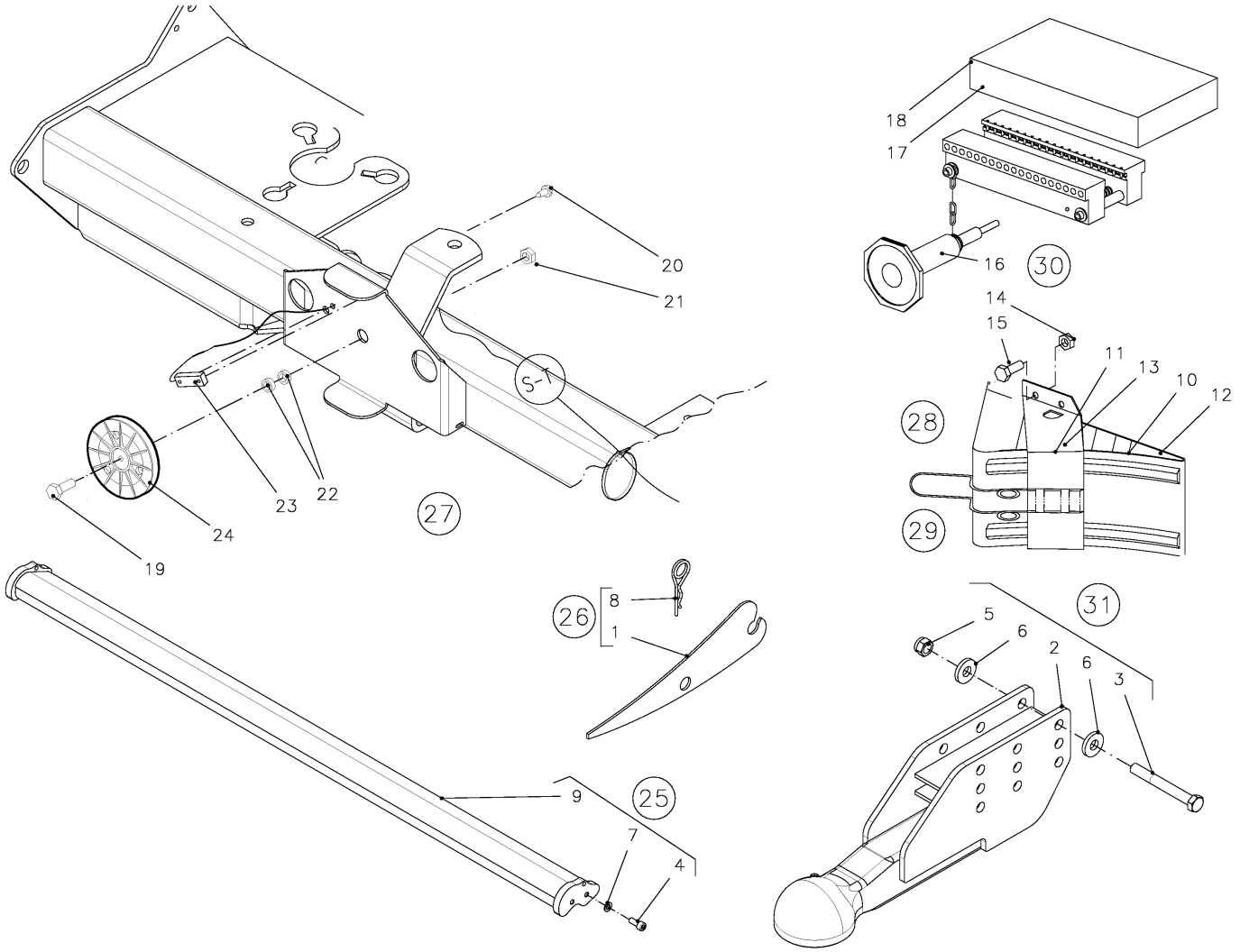

SPMVG000499

6490 / ACCESSOIRES VARIOUS

PosNo.	Part No.	Qty.	Description	Remark
1	VF16613171	14	FILLER PLATE	
2	VF16659365.86	1	DRAW BAR, BALL-	
3	VG37305654V	1	BOLT, NUTTED	
4	KG00545061	4	CHEESE HEAD SCREW M8X20 8.8	
5	KG01069161	1	LOCK NUT M16 10	
6	KG01273961	2	WASHER M16	
7	KG01281661	4	SPRING WASHER M8	
8	VGPZ160V	2	SPRING CLIP	
9	VGWA01595	1	PLATE, GUIDE	
10	VGND97066	2	CHOCK	400/60x22.5
11	VGND97067	2	HOLDER	400/60x22.5
12	VGND97068	2	CHOCK	500/45x22.5
13	VGND97069	2	HOLDER	500/45x22.5
14	KG01061161	8	LOCK NUT M6 8	
15	KG00980761	8	FLANGED BOLT M6X20 90	
16	VGWA1489	1	PUNCH DRIVE	
17	ACCESSOIRE	1	PLEASE CONTACT YOUR DEALER	
18	ACCESSOIRE	2	PLEASE CONTACT YOUR DEALER	
19	KG00474461	2	HEX. SCREW M10X35 8.8	
20	KG00742063	2	TAPPING SCREW 3.5X9.5 4.8	
21	KG01068861	2	LOCK NUT M10 10	
22	VGBP906V	4	BUSH	
23	VGND91008	2	SWITCH	
24	VGWA00909	2	PULLEY, CABLE	
26	ACCESSOIRE	1	PLEASE CONTACT YOUR DEALER	
27	ACCESSOIRE	1	PLEASE CONTACT YOUR DEALER	
28	ACCESSOIRE	1	PLEASE CONTACT YOUR DEALER	
29	ACCESSOIRE	1	PLEASE CONTACT YOUR DEALER	400/60x22.5
30	ACCESSOIRE	1	PLEASE CONTACT YOUR DEALER	500/45x22.5
31	ACCESSOIRE	1	PLEASE CONTACT YOUR DEALER	

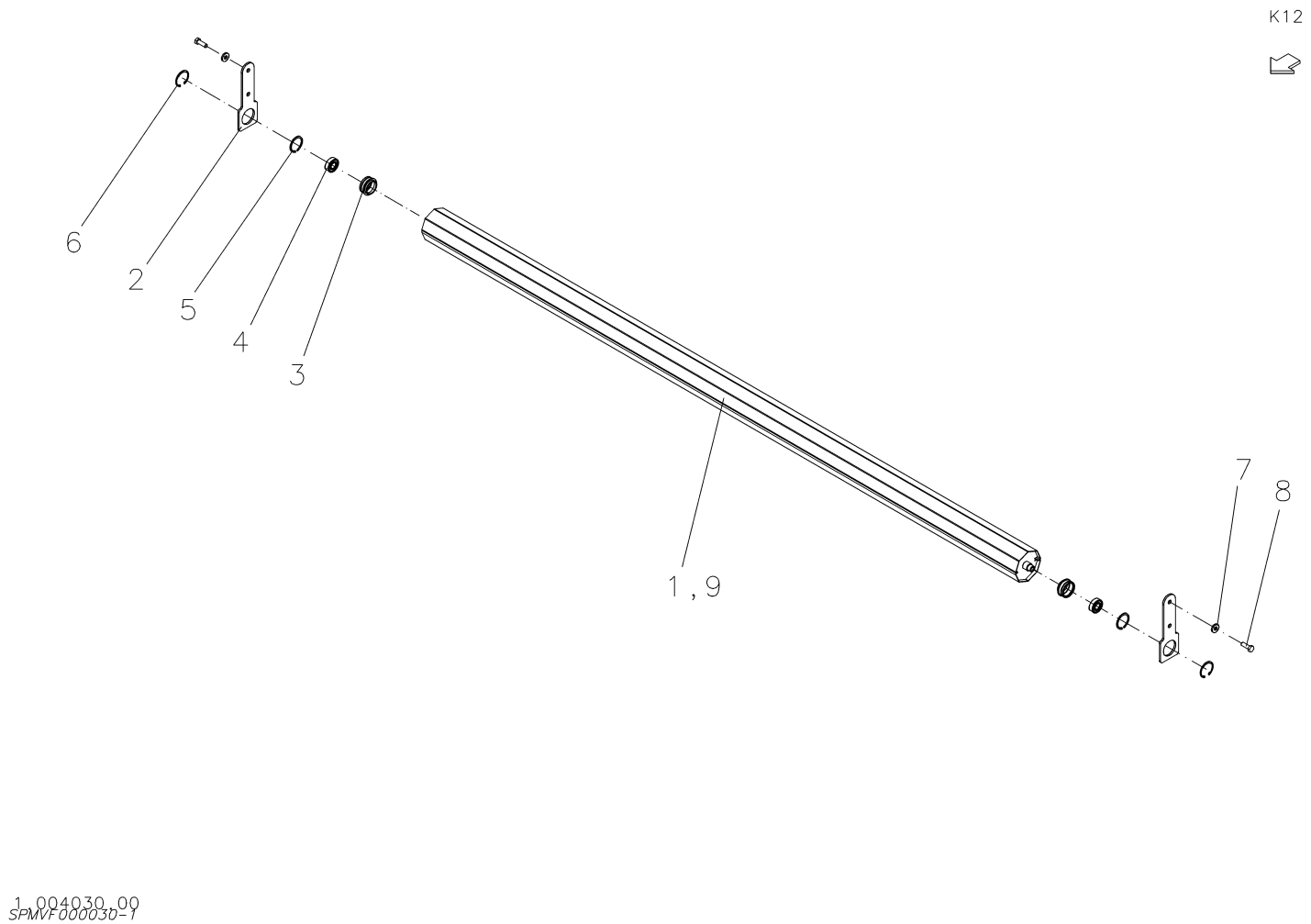

SPMVF000030

6490 / PICK-UP ROLLER

PosNo.	Part No.	Qty.	Description	Remark
1	VF16652161.86	1	PU-DRUM 23COUTEAUX 2300MM	
2	VF16652187.86	2	HOUSING	
3	UH410884	2	BEARING HOUSING	
4	KG01475400	2	BALL BEARING 6203-2RS C3	
5	KG01128062	2	CIRCLIP-B 40 X 1.75	
6	KG01110200	2	CIRCLIP-A 47 X 1.75	
7	KG01273661	4	WASHER M10	
8	VF01177466	4	HEX.BOLT	
9	VF16654361.86	1	PU-DRUM	OC-14

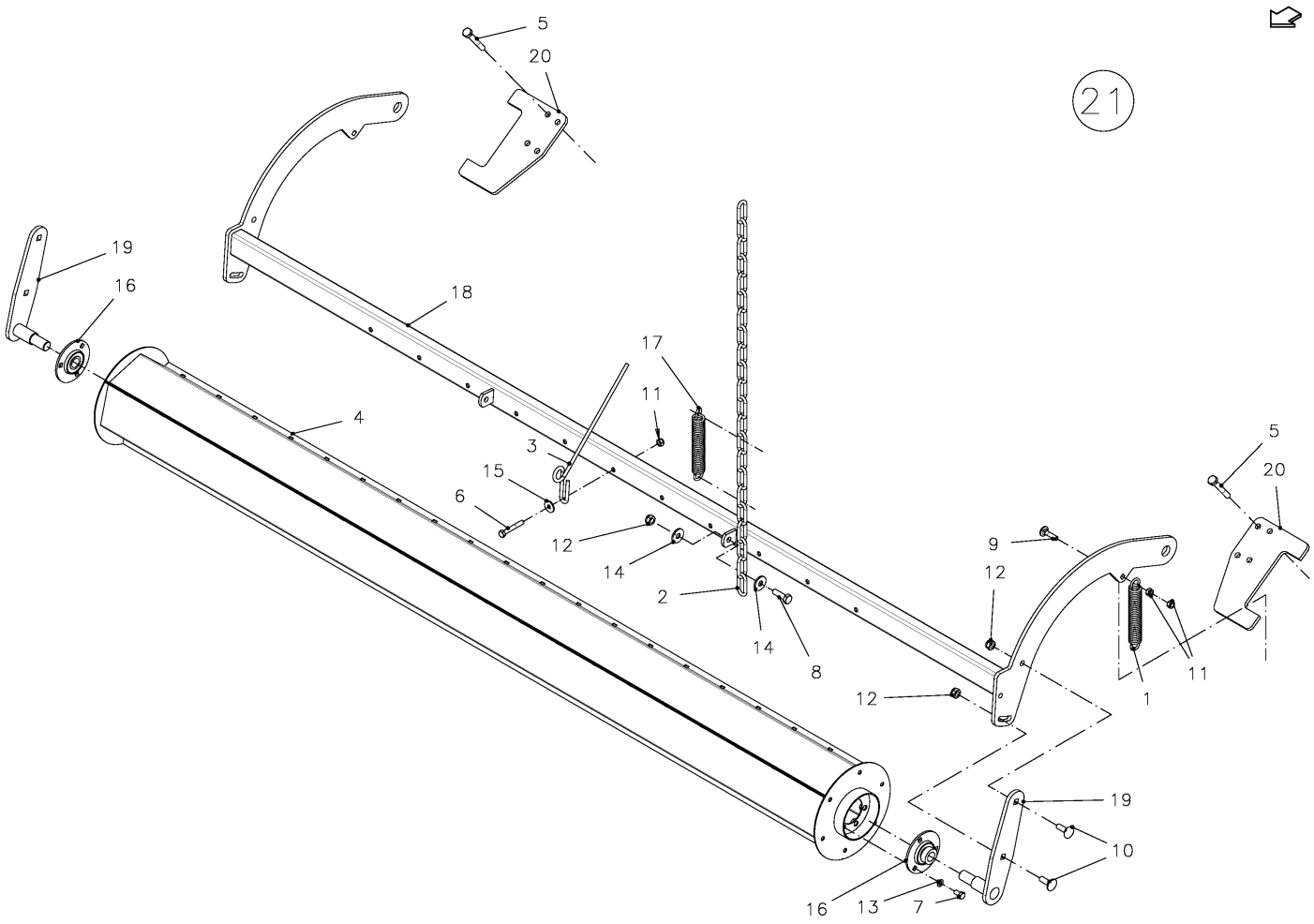

SPMVG000897

6490 / PICK-UP ROLLER

PosNo.	Part No.	Qty.	Description	Remark
1	VF01141494	1	TENSION SRING	
2	VF01397910	2	CHAIN/TRACK	
3	VF16618436	11	SPRING TINE	
4	VGGP0919K0	1	ROLLER	
5	KG00336561	4	HEX. BOLT M10X70 10.9	
6	KG00353561	11	HEX. BOLT M8X55 8.8	
7	KG00471761	6	HEX. SCREW M8X16 8.8	
8	KG00474461	2	HEX. SCREW M10X35 8.8	
9	KG00639361	1	CARRIAGE BOLT M8X35 8.8	
10	KG00641561	4	CARRIAGE BOLT M10X30 8.8	
11	KG01068761	13	LOCK NUT M8 10	
12	KG01068861	6	LOCK NUT M10 10	
13	KG01281661	6	SPRING WASHER M8	
14	VGMT152V	4	RING	
15	VGND3030V	11	WASHER, PLAIN	
16	VGND5279	2	CUSHION, ADJUSTABLE	
17	VGPZ365V	2	SPRING, TENSION	
18	VGRL0658K0	1	SUPPORT	
19	VGRL0660K0	2	SUPPORT	
20	VGRL661K0	2	SUPPORT	
21	ACCESSOIRE	1	PLEASE CONTACT YOUR DEALER	

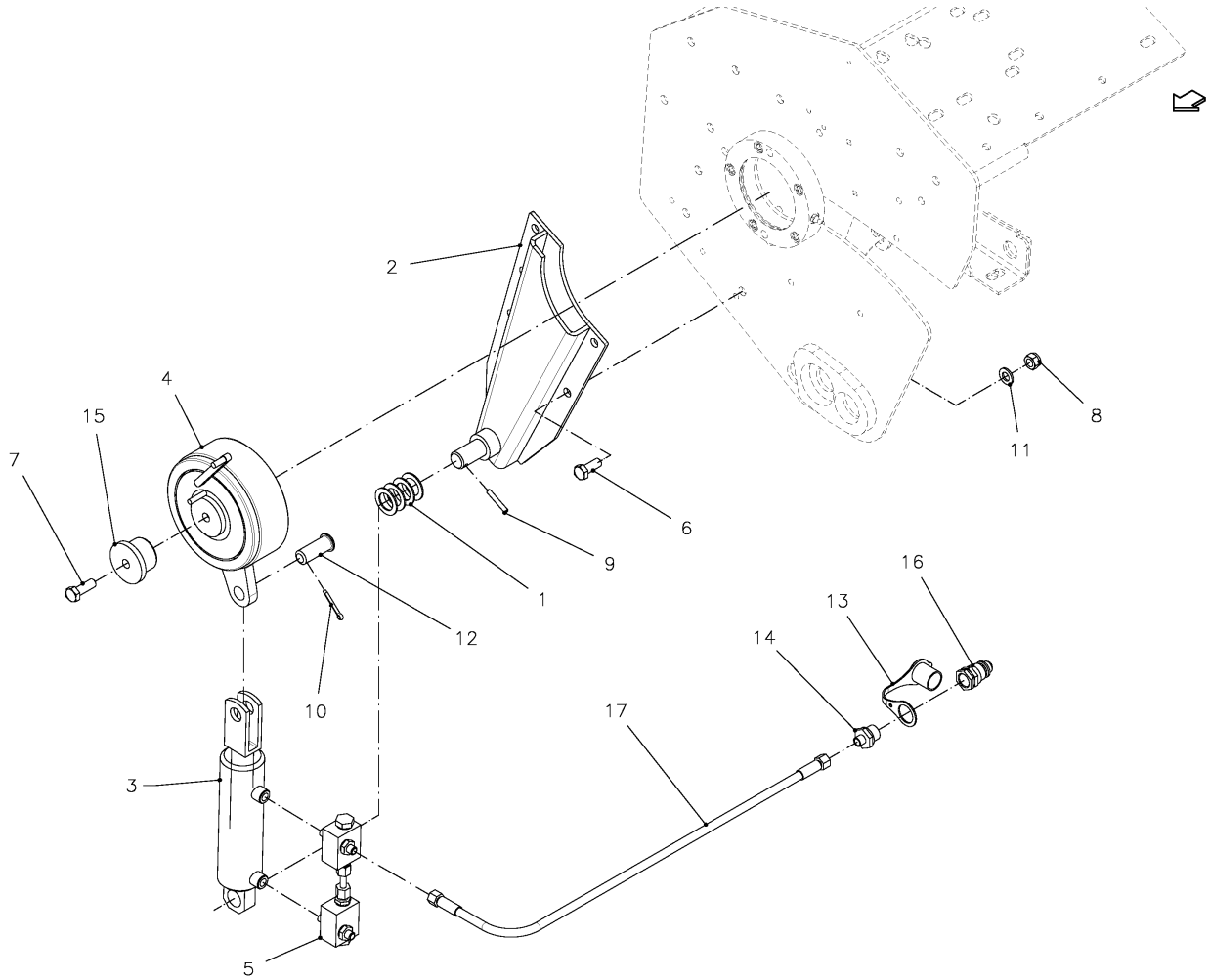

SPMVG000896

6490 / POWER PUSH DEVICE

PosNo.	Part No.	Qty.	Description	Remark
1	VGGZ124V	4	RING 2X25.2X42	
2	VF16613668	1	ZYL. LAGERUNG GSW.	
3	VF16651675	1	HYDRAULIKZYLINDER 50-30-0062	
4	VF16654232.86	1	FREILAUFKUPPLUNG UMSCHALTBAR	
5	VF16654269	2	DOPPEL DBV 170 BAR 2 FACH	
6	KG00476561	5	HEX. SCREW M12X30 8.8	
7	KG00476661	1	HEX. SCREW M12X35 8.8	
8	KG01068961	5	LOCK NUT M12 10	
9	KG01189662	1	TENSION PIN 6X40	
10	KG01252661	1	SPLIT PIN 5X32 ST	
11	KG01267561	5	WASHER M12	
12	VGMT100V	1	PIN	
13	VGND9607	2	COVER, DUST	
14	VGND9954V	2	STUD COUPLING, MALE	
15	VGRL939V	1	BUSHING	
16	VGTP00512	2	QUICK-DISCONNECT PLUG, MALE	
17	VGWA548	2	HOSE, HP	

6490 / Part No Index

Part No.	Page	Pos No	Part No.	Page	Pos No	Part No.	Page	Pos No	Part No.	Page	Pos No
AC351803	26	46	BV255040005R02	73	9	BV399CEE063	72	17	BV5IS6121CEWS	75	22
AC674143	33	1	BV255040006R02	72	10	BV399CEE063	73	17	BV6060E0309R	73	24
ACCESSOIRE	61	13	BV255040006R02	73	10	BV403000001R10	73	25	BV6WE154003R	72	24
ACCESSOIRE	80	44	BV2550E0005R02	72	11	BV4120E0011R25	72	18	BV6WG159003R	74	23
ACCESSOIRE	84	6	BV2550E0005R02	73	11	BV4120E0011R25	73	18	BV6WG161003R	75	23
ACCESSOIRE	85	17	BV2550G0001R02	74	7	BV4120E0051R40	72	19	KG00160200	1	4
ACCESSOIRE	85	18	BV2550G0001R02	75	7	BV4120E0051R40	73	19	KG00336561	87	5
ACCESSOIRE	85	26	BV2550G0002R02	74	9	BV4120G0012R40	74	16	KG00350861	19	2
ACCESSOIRE	85	27	BV2550G0002R02	75	9	BV4120G0012R40	75	16	KG00350861	21	5
ACCESSOIRE	85	28	BV2550G0024R02	74	8	BV4120G0051R30	74	17	KG00353161	33	2
ACCESSOIRE	85	29	BV2550G0024R02	75	8	BV4120G0051R30	75	17	KG00353161	46	25
ACCESSOIRE	85	30	BV310001431R30	72	12	BV421155401R	84	3	KG00353261	78	1
ACCESSOIRE	85	31	BV310001431R30	73	12	BV421155901R	74	25	KG00353361	38	7
ACCESSOIRE	87	21	BV310001431R30	74	10	BV432000053R05	73	26	KG00353461	6	4
BV204046852	72	1	BV310001431R30	75	10	BV435000323R	72	20	KG00353461	7	4
BV204046852	73	1	BV332001020R30	72	13	BV435000323R	73	20	KG00353461	61	36
BV204S66854	74	2	BV332001020R30	73	13	BV435000323R	74	18	KG00353561	87	6
BV204S66854	75	2	BV332001020R30	74	11	BV435000323R	75	18	KG00353661	40	18
BV2150E6885	72	7	BV332001020R30	75	11	BV5110E0052	72	6	KG00353661	52	20
BV2150E6885	73	7	BV341048000R10	72	15	BV5110E0052	73	6	KG00353661	64	28
BV2150G6871	74	3	BV341048000R10	73	15	BV5110G0061	74	19	KG00353761	23	12
BV2150G6871	75	3	BV341103000R10	74	13	BV5110G0061	75	19	KG00354361	46	8
BV225311060	72	2	BV341103000R10	75	13	BV5730E0384	72	21	KG00355461	40	19
BV225311060	73	2	BV399143000	72	5	BV5730E0384	73	21	KG00355661	16	2
BV2253Q1055	74	4	BV399143000	73	5	BV5730G0384	74	20	KG00355661	55	4
BV2253Q1055	75	4	BV399143000	74	1	BV5730G0384	75	20	KG00356361	16	3
BV240001063	72	3	BV399143000	75	1	BV5ES6121CEWS	74	21	KG00356361	38	8
BV240001063	73	3	BV399CEE051	72	16	BV5ES6121CEWS	75	21	KG00356761	36	4
BV245101060	72	4	BV399CEE051	73	16	BV5FE4121W1CE	72	22	KG00357761	21	6
BV245101060	73	4	BV399CEE051	74	14	BV5FE4121W1CE	73	22	KG00358161	23	13
BV2453N1070	74	5	BV399CEE051	75	14	BV5FI4121FFCE	72	23	KG00358761	82	4
BV2453N1070	75	5	BV399CEE053	74	15	BV5FI4121FFCE	73	23	KG00362661	49	10
BV255040005R02	72	9	BV399CEE053	75	15	BV5IS6121CEWS	74	22	KG00362761	83	5

6490 / Part No Index

Part No.	Page	Pos No	Part No.	Page	Pos No	Part No.	Page	Pos No	Part No.	Page	Pos No
KG00456361	31	2	KG00474161	40	20	KG00476461	64	32	KG00545061	39	4
KG00456561	31	3	KG00474200	80	3	KG00476461	80	33	KG00545061	85	4
KG00456561	35	4	KG00474261	1	6	KG00476561	3	7	KG00545161	39	5
KG00457261	78	2	KG00474261	17	2	KG00476561	5	21	KG00545161	53	28
KG00457361	35	5	KG00474261	18	11	KG00476561	17	3	KG00546661	32	8
KG00468761	55	24	KG00474261	19	3	KG00476561	18	12	KG00546661	35	6
KG00468761	60	17	KG00474261	21	7	KG00476561	19	4	KG00546761	34	1
KG00468961	54	4	KG00474261	39	2	KG00476561	20	2	KG00546761	35	7
KG00468961	61	37	KG00474261	52	21	KG00476561	21	9	KG00546861	34	2
KG00471561	6	5	KG00474261	53	24	KG00476561	22	3	KG00549761	31	5
KG00471561	7	5	KG00474261	54	5	KG00476561	39	3	KG00555861	26	6
KG00471561	64	29	KG00474261	64	30	KG00476561	41	4	KG00637061	29	2
KG00471761	1	5	KG00474361	2	1	KG00476561	46	9	KG00637061	31	6
KG00471761	3	6	KG00474361	8	3	KG00476561	48	16	KG00637061	35	8
KG00471761	26	4	KG00474361	21	8	KG00476561	53	26	KG00637061	36	7
KG00471761	66	2	KG00474361	32	7	KG00476561	54	6	KG00637061	37	2
KG00471761	87	7	KG00474361	33	4	KG00476561	88	6	KG00637061	69	3
KG00471900	61	38	KG00474361	36	6	KG00476661	21	10	KG00637061	70	3
KG00471961	31	4	KG00474361	40	21	KG00476661	46	10	KG00637161	35	9
KG00471961	32	4	KG00474361	44	2	KG00476661	53	27	KG00637161	36	8
KG00471961	53	23	KG00474361	52	22	KG00476661	59	32	KG00637261	11	20
KG00471961	78	3	KG00474361	64	31	KG00476661	64	33	KG00637461	38	9
KG00472100	36	5	KG00474461	51	7	KG00476661	88	7	KG00637561	37	3
KG00472161	15	2	KG00474461	53	25	KG00476761	3	8	KG00638961	17	4
KG00472161	26	5	KG00474461	66	3	KG00476761	19	5	KG00638961	18	20
KG00472161	32	5	KG00474461	71	3	KG00476761	83	6	KG00638961	31	7
KG00472161	80	35	KG00474461	85	19	KG00480061	13	4	KG00638961	32	9
KG00472361	32	6	KG00474461	87	8	KG00480061	14	2	KG00638961	33	5
KG00472461	46	26	KG00475361	24	2	KG00480061	24	3	KG00638961	35	10
KG00472561	33	3	KG00476261	12	4	KG00480161	1	7	KG00638961	68	1
KG00473961	30	3	KG00476261	13	2	KG00480261	3	9	KG00638961	69	4
KG00474061	15	3	KG00476261	57	2	KG00544961	71	4	KG00639061	34	3
KG00474061	44	1	KG00476461	13	3	KG00545061	16	4	KG00639061	39	6

6490 / Part No Index

Part No.	Page	Pos No	Part No.	Page	Pos No	Part No.	Page	Pos No	Part No.	Page	Pos No
KG00639061	51	5	KG00641661	32	11	KG00981061	26	7	KG01050761	9	7
KG00639061	66	4	KG00641661	35	12	KG00981061	29	3	KG01051961	30	5
KG00639061	69	5	KG00641661	43	4	KG00981061	70	4	KG01051961	80	34
KG00639161	68	2	KG00641661	54	8	KG00981161	24	6	KG01052061	12	6
KG00639261	35	11	KG00641761	12	5	KG00981161	32	12	KG01052061	24	9
KG00639361	46	11	KG00641961	15	5	KG00981161	54	9	KG01052061	32	13
KG00639361	87	9	KG00641961	18	14	KG00981161	66	5	KG01052061	33	9
KG00640061	36	9	KG00642261	13	5	KG00981161	69	7	KG01052061	34	7
KG00640261	30	4	KG00642261	23	14	KG00981261	11	21	KG01052061	38	13
KG00641361	32	10	KG00642361	44	3	KG00981261	41	6	KG01052061	39	9
KG00641361	33	6	KG00642561	7	6	KG00981261	68	3	KG01052061	54	11
KG00641461	3	10	KG00642661	33	7	KG00981761	11	22	KG01052061	71	6
KG00641461	14	3	KG00642661	80	4	KG00981761	24	7	KG01052161	18	15
KG00641461	15	4	KG00644761	3	12	KG01000161	24	8	KG01052161	23	15
KG00641461	17	5	KG00644761	34	5	KG01000161	34	6	KG01052161	34	8
KG00641461	18	24	KG00644761	43	5	KG01000161	36	10	KG01052161	46	14
KG00641461	24	4	KG00644861	46	12	KG01000161	40	23	KG01052161	47	11
KG00641461	34	4	KG00645061	43	6	KG01000161	45	6	KG01052161	54	12
KG00641461	39	7	KG00645261	63	7	KG01000661	2	2	KG01052161	82	11
KG00641461	40	22	KG00645261	67	2	KG01000661	29	4	KG01052361	4	5
KG00641461	43	3	KG00645261	80	5	KG01000661	33	8	KG01052361	12	7
KG00641461	47	10	KG00645561	44	4	KG01000661	38	12	KG01052361	23	3
KG00641461	54	7	KG00646061	63	8	KG01000661	39	8	KG01061161	29	5
KG00641461	71	5	KG00742063	85	20	KG01000661	41	7	KG01061161	31	9
KG00641561	3	11	KG00745463	41	5	KG01000661	46	13	KG01061161	32	14
KG00641561	17	6	KG00865161	15	6	KG01000661	54	10	KG01061161	35	13
KG00641561	18	13	KG00980461	53	29	KG01000661	66	6	KG01061161	36	11
KG00641561	24	5	KG00980461	64	35	KG01000861	3	13	KG01061161	38	14
KG00641561	64	34	KG00980561	38	10	KG01000861	11	23	KG01061161	54	13
KG00641561	67	1	KG00980661	38	11	KG01000861	13	6	KG01061161	69	8
KG00641561	82	13	KG00980661	69	6	KG01000861	26	8	KG01061161	70	5
KG00641561	87	10	KG00980761	37	4	KG01000861	83	9	KG01061161	78	4
KG00641661	31	8	KG00980761	85	15	KG01043261	52	12	KG01061161	85	14

Part No.	Page	Pos No	Part No.	Page	Pos No	Part No.	Page	Pos No	Part No.	Page	Pos No
KG01061261	11	24	KG01067361	61	39	KG01068861	17	8	KG01068961	17	9
KG01061261	16	5	KG01068761	6	6	KG01068861	18	16	KG01068961	18	17
KG01061261	17	7	KG01068761	7	8	KG01068861	23	17	KG01068961	20	3
KG01061261	18	21	KG01068761	8	4	KG01068861	24	11	KG01068961	21	12
KG01061261	24	10	KG01068761	15	7	KG01068861	31	11	KG01068961	23	18
KG01061261	29	6	KG01068761	23	16	KG01068861	32	17	KG01068961	35	17
KG01061261	31	10	KG01068761	26	9	KG01068861	33	12	KG01068961	42	8
KG01061261	32	15	KG01068761	32	16	KG01068861	34	10	KG01068961	43	8
KG01061261	33	10	KG01068761	33	11	KG01068861	35	16	KG01068961	44	6
KG01061261	35	14	KG01068761	34	9	KG01068861	36	15	KG01068961	49	12
KG01061261	36	12	KG01068761	35	15	KG01068861	40	25	KG01068961	50	19
KG01061261	39	10	KG01068761	36	14	KG01068861	43	7	KG01068961	53	32
KG01061261	52	23	KG01068761	38	17	KG01068861	44	5	KG01068961	59	33
KG01061261	54	14	KG01068761	39	11	KG01068861	47	12	KG01068961	63	9
KG01061261	66	7	KG01068761	40	24	KG01068861	49	11	KG01068961	64	38
KG01061261	68	4	KG01068761	41	9	KG01068861	51	8	KG01068961	67	4
KG01061261	69	9	KG01068761	46	33	KG01068861	52	24	KG01068961	78	7
KG01061261	70	6	KG01068761	53	30	KG01068861	53	31	KG01068961	80	7
KG01061361	7	7	KG01068761	61	40	KG01068861	54	15	KG01068961	88	8
KG01061361	11	25	KG01068761	64	36	KG01068861	55	5	KG01069161	3	16
KG01061361	36	13	KG01068761	66	8	KG01068861	59	34	KG01069161	26	10
KG01061361	38	15	KG01068761	71	7	KG01068861	64	37	KG01069161	45	7
KG01061361	41	8	KG01068761	78	6	KG01068861	66	9	KG01069161	49	13
KG01061361	78	5	KG01068761	87	11	KG01068861	67	3	KG01069161	83	7
KG01061361	79	3	KG01068861	3	14	KG01068861	71	8	KG01069161	85	5
KG01067261	29	7	KG01068861	6	7	KG01068861	80	6	KG01069261	2	3
KG01067261	30	6	KG01068861	7	9	KG01068861	82	15	KG01069261	12	9
KG01067361	19	6	KG01068861	8	5	KG01068861	85	21	KG01069261	18	18
KG01067361	21	11	KG01068861	12	8	KG01068861	87	12	KG01069261	19	7
KG01067361	37	5	KG01068861	13	7	KG01068961	3	15	KG01069261	20	4
KG01067361	38	16	KG01068861	14	4	KG01068961	5	22	KG01069261	21	13
KG01067361	55	25	KG01068861	15	8	KG01068961	6	8	KG01069261	22	4
KG01067361	60	18	KG01068861	16	6	KG01068961	7	10	KG01081800	1	8

6490 / Part No Index

Part No.	Page	Pos No	Part No.	Page	Pos No	Part No.	Page	Pos No	Part No.	Page	Pos No
KG01094161	31	34	KG01128700	30	7	KG01252661	88	10	KG01273961	24	12
KG01098562	26	11	KG01128700	53	36	KG01267361	33	14	KG01273961	85	6
KG01099062	33	13	KG01129000	12	11	KG01267361	46	35	KG01281661	16	7
KG01099600	21	14	KG01129000	13	8	KG01267361	78	8	KG01281661	61	41
KG01099600	22	5	KG01130900	20	5	KG01267361	80	36	KG01281661	64	43
KG01107462	39	12	KG01186562	42	9	KG01267461	35	18	KG01281661	80	37
KG01107462	53	33	KG01186562	65	5	KG01267461	53	37	KG01281661	85	7
KG01107562	31	12	KG01186662	55	7	KG01267461	54	16	KG01281661	87	13
KG01107562	40	26	KG01186662	60	19	KG01267461	59	37	KG01281761	39	15
KG01107562	52	25	KG01187662	50	7	KG01267461	64	41	KG01281861	6	11
KG01107562	64	39	KG01188162	43	9	KG01267461	67	5	KG01281861	7	11
KG01108362	12	10	KG01189262	30	8	KG01267561	12	13	KG01282061	1	11
KG01108362	36	16	KG01189662	26	12	KG01267561	34	12	KG01282061	4	7
KG01108362	37	6	KG01189662	88	9	KG01267561	63	10	KG01286461	9	6
KG01108362	38	18	KG01190062	40	1	KG01267561	88	11	KG01294162	36	17
KG01108362	53	34	KG01190062	52	13	KG01267661	6	10	KG01294162	78	9
KG01108362	70	7	KG01190062	64	3	KG01267761	39	14	KG01300800	37	7
KG01108862	39	13	KG01191962	47	13	KG01267761	42	11	KG01306400	33	15
KG01108862	40	27	KG01191962	50	8	KG01267761	45	9	KG01306900	52	27
KG01108862	52	26	KG01191962	59	36	KG01267761	49	4	KG01307200	53	38
KG01108862	53	35	KG01192062	42	10	KG01267761	50	6	KG01307200	59	38
KG01108862	59	35	KG01192162	72	14	KG01267761	56	11	KG01308600	33	40
KG01108862	64	40	KG01192162	73	14	KG01267761	58	7	KG01354500	31	13
KG01109862	46	15	KG01249661	60	20	KG01267761	62	12	KG01356100	53	39
KG01109862	48	17	KG01249761	69	10	KG01267761	65	6	KG01374500	35	19
KG01110162	4	6	KG01249861	12	12	KG01267961	3	17	KG01377800	23	5
KG01110200	86	6	KG01249861	34	11	KG01267961	43	10	KG01377800	37	8
KG01110462	48	18	KG01251561	6	9	KG01267961	55	19	KG01378900	12	14
KG01119100	1	9	KG01251561	45	8	KG01267961	60	21	KG01378900	13	9
KG01119100	84	2	KG01251561	56	10	KG01268161	26	13	KG01378900	42	12
KG01128062	86	5	KG01251561	58	6	KG01273561	52	29	KG01378900	80	8
KG01128700	23	4	KG01251561	62	11	KG01273561	64	42	KG01379500	50	14
KG01128700	29	9	KG01252061	1	10	KG01273661	86	7	KG01380000	31	14

6490 / Part No Index

Part No.	Page	Pos No	Part No.	Page	Pos No	Part No.	Page	Pos No	Part No.	Page	Pos No
KG01380000	53	40	VF01141364	49	1	VF06214306	55	15	VF06273756	59	39
KG01382000	20	6	VF01141364	50	15	VF06214306	55	26	VF06277506	55	14
KG01382800	1	12	VF01141494	51	16	VF06214306	60	1	VF06550817	47	2
KG01475400	86	4	VF01141494	87	1	VF06214306	61	7	VF06550817	59	7
KG01476400	49	14	VF01142334	5	11	VF06214321	59	3	VF06552557	55	23
KG01799800	1	13	VF01142668	5	12	VF06214411	56	35	VF06552557	60	2
KG01799800	5	5	VF01142791	20	20	VF06214421	50	11	VF06554382.86	47	3
KG01799800	10	4	VF01142791	21	43	VF06214938	40	5	VF06554382.86	59	8
KG01800100	1	14	VF01157314	55	20	VF06214938	52	17	VF06560636	8	11
KG01802500	5	6	VF01157314	60	23	VF06214938	64	49	VF06564733	42	18
KG01803900	10	5	VF01157314	61	3	VF06215027	40	6	VF06564733	49	16
KG01840161	17	10	VF01157427	40	3	VF06215027	52	1	VF06564735.98	42	2
KG01840161	18	1	VF01157427	53	2	VF06215027	64	6	VF06564735.98	49	5
KG01840561	3	18	VF01157427	64	47	VF06215408	46	1	VF06564735.98	50	16
KK742357	77	1	VF01170940	40	4	VF06215425	45	1	VF06567492	42	5
MT00000519	29	24	VF01170940	52	15	VF06215425	56	1	VF06567492	49	6
MT00000520	29	27	VF01170940	64	48	VF06215425	58	1	VF06567492	50	13
MT00000530	27	4	VF01173381	41	1	VF06215425	62	1	VF06576501	45	2
MT00000770	27	2	VF01173381	59	1	VF06215432	47	1	VF06576501	62	2
UH300562	31	29	VF01177466	52	16	VF06215432	59	6	VF06576898.86	38	1
UH300562	32	37	VF01177466	86	8	VF06215540	53	4	VF06576899	38	2
UH300562	35	34	VF01397863	51	6	VF06215541	65	1	VF06579564.86	55	2
UH301275	4	11	VF01397910	51	10	VF06215766	52	2	VF06579571	55	16
UH301276	4	12	VF01397910	87	2	VF06215766	53	5	VF06579571	61	8
UH410884	86	3	VF01397983	49	2	VF06215766	64	7	VF06579628	55	9
UH411750	36	28	VF06209240	48	1	VF06215783	52	3	VF06579628	56	3
UH453537	35	35	VF06209465	54	33	VF06215783	64	8	VF06579628	60	3
VF01104181	53	1	VF06209483	53	3	VF06229502	50	10	VF06580546	42	19
VF01104181	64	1	VF06209483	64	4	VF06246785	39	1	VF06580546	49	19
VF01116677	61	2	VF06209627	61	4	VF06246785	53	6	VF06580546	50	20
VF01122071	55	8	VF06213194	23	24	VF06249879	42	4	VF16512862	55	6
VF01137130	64	2	VF06214132	61	5	VF06249879	49	18	VF16512934	55	18
VF01141364	42	1	VF06214246	61	6	VF06249879	50	17	VF16512957	56	4

Part No.	Page	Pos No	Part No.	Page	Pos No	Part No.	Page	Pos No	Part No.	Page	Pos No
VF16513632	55	21	VF16614227.86	47	7	VF16617244	40	13	VF16618864	53	15
VF16513632	56	5	VF16614227.86	59	11	VF16617478	54	1	VF16618864	64	50
VF16514204.86	42	6	VF16614253.86	46	3	VF16617521.86	55	13	VF16618868.86	40	16
VF16514266	51	4	VF16614276.86	46	21	VF16617905.86	53	11	VF16618868.86	52	7
VF16514629	45	3	VF16614279	46	4	VF16617905.86	59	18	VF16618868.86	64	14
VF16514629	56	6	VF16615109	48	7	VF16617910	40	14	VF16618872	40	17
VF16514629	58	3	VF16615114	48	8	VF16617910	52	4	VF16618876	53	16
VF16514629	62	3	VF16615117	48	9	VF16617910	64	10	VF16618891	53	17
VF16517257	51	15	VF16615203.86	40	7	VF16618011.86	40	15	VF16619091	63	2
VF16517258.86	51	12	VF16615203.86	52	18	VF16618011.86	52	5	VF16619092	63	3
VF16517301	51	13	VF16615203.86	64	13	VF16618011.86	64	11	VF16619098.61	59	15
VF16517302.86	51	14	VF16615219.86	46	22	VF16618012	53	12	VF16619106	61	9
VF16519184	45	4	VF16615220.86	46	23	VF16618012	64	12	VF16619111	59	16
VF16519184	56	7	VF16615236.86	46	24	VF16618017.86	53	13	VF16619169.86	61	10
VF16519184	58	4	VF16615268	5	13	VF16618017.86	59	13	VF16619185	47	5
VF16519184	62	4	VF16615400	71	1	VF16618111	3	1	VF16619185	59	17
VF16611457	32	1	VF16616018	5	14	VF16618150	48	12	VF16619199	63	4
VF16611457	69	1	VF16616328	46	5	VF16618198	46	6	VF16619420	48	13
VF16611577	48	14	VF16616404	46	28	VF16618323	45	5	VF16619481.86	51	19
VF16613168	55	12	VF16616404	48	10	VF16618323	56	8	VF16619716	61	11
VF16613171	85	1	VF16616404	59	12	VF16618323	58	5	VF16619724.86	60	5
VF16613256	6	1	VF16616460.86	40	8	VF16618323	62	5	VF16619724.86	61	12
VF16613668	88	2	VF16616475	53	8	VF16618436	51	18	VF16619739	64	15
VF16613954.86	48	2	VF16616480	40	9	VF16618436	87	3	VF16619797	63	5
VF16613956.86	48	3	VF16616481	40	10	VF16618448	59	14	VF16619824	53	18
VF16613976.86	55	1	VF16616797.86	48	11	VF16618449	52	8	VF16619855.86	59	42
VF16614025	48	4	VF16616807	48	15	VF16618449	64	16	VF16619858.86	52	9
VF16614109	46	2	VF16617204.86	53	9	VF16618515	55	3	VF16619858.86	64	17
VF16614124	47	4	VF16617206	53	10	VF16618516	55	17	VF16619877	59	19
VF16614124	59	9	VF16617225.86	40	11	VF16618516	60	4	VF16619892.86	59	20
VF16614126	48	5	VF16617225.86	53	7	VF16618729.86	53	14	VF16619893	59	21
VF16614126	59	10	VF16617225.86	64	9	VF16618811.86	52	6	VF16619984	46	36
VF16614169	48	6	VF16617227	40	12	VF16618815.86	42	7	VF16619998	11	1

Part No.	Page	Pos No	Part No.	Page	Pos No	Part No.	Page	Pos No	Part No.	Page	Pos No
VF16622598	42	3	VF16652067	61	33	VF16654530	47	8	VF16658677	60	16
VF16622598	49	7	VF16652161.86	86	1	VF16654530	59	27	VF16659365.86	4	1
VF16622598	50	12	VF16652187.86	86	2	VF16654682.86	50	1	VF16659365.86	85	2
VF16650129.86	8	1	VF16652199.86	51	17	VF16654683.86	50	2	VG11697010V	26	31
VF16650192	8	2	VF16652328.86	64	18	VF16654690.86	50	3	VG13128001V	35	1
VF16650327	59	22	VF16652343	56	34	VF16654691.86	50	4	VG13128001V	36	1
VF16650699	61	13	VF16652374.86	49	8	VF16654751	59	28	VG13128001V	37	1
VF16650801	63	6	VF16652392.86	49	9	VF16655023	52	31	VG13128001V	38	3
VF16650850	59	43	VF16652392.86	50	5	VF16655023	64	22	VG13128001V	70	1
VF16650855	59	44	VF16652480.86	59	25	VF16655049	52	32	VG13378002	23	1
VF16650998	61	15	VF16652834	56	2	VF16655089	55	10	VG13813004	41	26
VF16651042.86	61	16	VF16652834	58	2	VF16655089	60	6	VG13925028V	26	1
VF16651114	61	18	VF16652834	62	6	VF16655141	59	29	VG13925033V	43	1
VF16651157	61	19	VF16653020	54	2	VF16655813	60	7	VG13929020V	21	1
VF16651180.86	53	19	VF16653051	62	7	VF16655849	60	8	VG13974003V	26	2
VF16651183	61	20	VF16653138	47	6	VF16655861	60	9	VG17654007	41	23
VF16651185	61	17	VF16653180	54	3	VF16655862.86	60	10	VG17662018V	80	38
VF16651186	61	22	VF16653188	55	22	VF16655863	60	11	VG18601321V	43	2
VF16651188	61	23	VF16653304.86	64	19	VF16655875.86	60	13	VG18940610V	19	1
VF16651190.86	53	20	VF16653600	53	48	VF16655895.86	59	30	VG18940610V	20	1
VF16651203	61	24	VF16653934	12	1	VF16655935	60	14	VG18940610V	21	2
VF16651204.86	61	25	VF16654232.86	88	4	VF16655943	64	23	VG18940610V	22	1
VF16651207	61	26	VF16654252.86	59	26	VF16655994	53	22	VG19017027V	3	2
VF16651304	61	27	VF16654269	88	5	VF16656655	5	35	VG19017027V	83	1
VF16651307.86	59	23	VF16654305.86	53	21	VF16656656	5	36	VG19077005V	80	42
VF16651327	61	29	VF16654308.86	64	20	VF16656700	64	51	VG19154022	80	1
VF16651329	61	30	VF16654311.86	64	21	VF16656715	64	24	VG19157033V	3	3
VF16651331	61	31	VF16654361.86	86	9	VF16656726.86	64	25	VG19157033V	83	2
VF16651337.86	61	32	VF16654387.86	52	10	VF16657582	5	39	VG25265014	4	2
VF16651638	61	34	VF16654388.86	52	11	VF16657583	5	37	VG25276045	4	3
VF16651675	88	3	VF16654389.86	51	3	VF16657584	5	38	VG37129064V	13	1
VF16651696	59	24	VF16654449	6	23	VF16657711.86	57	1	VG37129064V	14	1
VF16652067	61	14	VF16654457	56	33	VF16657772.61	60	15	VG37129064V	24	1

6490 / Part No Index

Part No.	Page	Pos No	Part No.	Page	Pos No	Part No.	Page	Pos No	Part No.	Page	Pos No
VG37305654V	4	4	VGBR550	5	1	VGGM152V	69	2	VGMH416V	35	20
VG37305654V	85	3	VGBR552	5	2	VGGM152V	70	2	VGMH416V	46	27
VG37658602	80	40	VGBR553	5	3	VGGP01856K0	65	3	VGMT00310	1	15
VG38722004	5	15	VGBR553	10	2	VGGP02000K0	64	26	VGMT00310	40	28
VG38723002	5	16	VGBR554	5	4	VGGP0919K0	87	4	VGMT00310	52	28
VG61.05.04	40	2	VGBR554	6	2	VGGP1098K0	64	27	VGMT00310	53	41
VG61.05.04	52	14	VGBR554	7	2	VGGP1419K0	61	28	VGMT00310	59	4
VG61.05.04	74	12	VGBR554	10	3	VGGP1855	65	4	VGMT00310	64	5
VG61.05.04	75	12	VGBR660V	79	2	VGGP377	11	10	VGMT00310	80	9
VG82.36.08	72	8	VGBR682	82	1	VGGP379	11	11	VGMT0062	12	15
VG82.36.08	73	8	VGBR683	82	2	VGGP380	11	12	VGMT0062	53	42
VG82.36.08	74	6	VGBR692V	82	3	VGGP381	11	13	VGMT0063	48	19
VG82.36.08	75	6	VGBR739V	71	2	VGGP385	11	14	VGMT0063	59	2
VGAH00132	1	1	VGBR785	30	2	VGGP386	11	15	VGMT100V	88	12
VGAH00132	21	3	VGBR859	38	4	VGGP387	11	16	VGMT152V	24	13
VGAH00132	22	2	VGBV189	23	2	VGGP388	11	17	VGMT152V	35	21
VGAH00132	46	7	VGDN807V	32	2	VGGP455K0	66	1	VGMT152V	44	7
VGBF00349	56	9	VGDS59V	47	9	VGGP493	11	18	VGMT152V	51	9
VGBF71	6	29	VGEF75	38	39	VGGP588	7	29	VGMT152V	53	43
VGBP402V	80	2	VGEH00102	65	2	VGGP588	11	37	VGMT152V	87	14
VGBP505V	12	3	VGEP227V	31	1	VGGP590	11	19	VGMT97V	42	13
VGBP505V	82	9	VGEP28V	6	3	VGGP611V	1	2	VGMT98V	38	37
VGBP906V	36	3	VGEP28V	7	3	VGGP899V	35	3	VGND1176V	37	9
VGBP906V	85	22	VGEP402V	41	3	VGGS0089	1	3	VGND1176V	38	19
VGBR001029	3	4	VGET312V	35	2	VGGS0089	84	1	VGND1181V	5	23
VGBR001091	5	10	VGEU40V	15	1	VGGZ124V	88	1	VGND1181V	6	12
VGBR001091	10	1	VGEU40V	26	3	VGHK116V	38	6	VGND1181V	7	12
VGBR00344	14	14	VGFS97	62	10	VGHK116V	82	14	VGND1221V	78	23
VGBR00344	24	39	VGG0704RKL(8)	77	2	VGLG200	61	21	VGND1221V	79	7
VGBR0755	41	2	VGGB0205	59	31	VGMH00356V	83	3	VGND1402V	20	7
VGBR1086V	21	4	VGGM152V	16	1	VGMH416V	6	13	VGND1461V	31	15
VGBR132V	38	32	VGGM152V	32	3	VGMH416V	7	13	VGND1461V	70	8
VGBR155	3	5	VGGM152V	38	5	VGMH416V	33	16	VGND1461V	78	24

6490 / Part No Index

Part No.	Page	Pos No	Part No.	Page	Pos No	Part No.	Page	Pos No	Part No.	Page	Pos No
VGND1472V	56	12	VGND3147V	19	8	VGND4030V	37	10	VGND90007	54	20
VGND1472V	62	13	VGND3147V	21	15	VGND4030V	55	11	VGND90026	7	16
VGND1481V	53	44	VGND3147V	30	14	VGND4030V	60	22	VGND90028	69	12
VGND1495V	63	1	VGND3147V	31	17	VGND4030V	61	1	VGND90033	24	14
VGND1607V	31	16	VGND3147V	32	18	VGND5022	2	5	VGND90033	45	10
VGND2134V	5	7	VGND3147V	33	18	VGND5022	19	10	VGND90038	32	19
VGND2134V	6	14	VGND3147V	34	14	VGND5022	20	9	VGND90040	29	8
VGND2134V	7	14	VGND3147V	35	22	VGND5022	21	17	VGND9031V	44	8
VGND2134V	10	6	VGND3147V	38	20	VGND5022	22	7	VGND91008	85	23
VGND3030V	3	19	VGND3147V	39	16	VGND5117	2	6	VGND91037	34	16
VGND3030V	8	6	VGND3147V	40	30	VGND5120	40	31	VGND92026	26	15
VGND3030V	34	13	VGND3147V	54	18	VGND5141	33	20	VGND92032V	26	16
VGND3030V	40	29	VGND3147V	71	15	VGND5187	39	18	VGND92032V	45	11
VGND3030V	87	15	VGND3148V	5	24	VGND5238	20	10	VGND92032V	56	14
VGND3034V	54	17	VGND3148V	6	15	VGND5238	22	8	VGND92044V	6	17
VGND3122V	56	13	VGND3148V	7	15	VGND5239	40	32	VGND92092V	1	16
VGND3122V	62	14	VGND3148V	12	17	VGND5277	17	12	VGND92093V	1	17
VGND3126	48	20	VGND3148V	13	10	VGND5277	18	2	VGND92104V	26	17
VGND3138V	52	30	VGND3148V	19	9	VGND5277	19	11	VGND92114V	45	12
VGND3138V	53	45	VGND3148V	20	8	VGND5277	21	18	VGND92114V	56	15
VGND3138V	59	5	VGND3148V	21	16	VGND5279	87	16	VGND92114V	58	8
VGND3138V	64	44	VGND3148V	22	6	VGND5286	12	18	VGND92114V	62	15
VGND3146V	11	26	VGND3148V	23	19	VGND5287	12	32	VGND92154V	6	18
VGND3146V	30	13	VGND3148V	34	15	VGND6127	80	10	VGND92154V	26	18
VGND3146V	33	17	VGND3148V	39	17	VGND6344	26	32	VGND92154V	56	18
VGND3146V	41	10	VGND3148V	46	16	VGND6352	26	33	VGND92154V	58	9
VGND3146V	46	34	VGND3148V	54	19	VGND6372	33	21	VGND92154V	62	18
VGND3147V	2	4	VGND3148V	57	3	VGND6373	10	7	VGND92155V	1	18
VGND3147V	3	20	VGND3148V	82	12	VGND6374	10	8	VGND92159	56	19
VGND3147V	12	16	VGND3156	6	16	VGND6375	10	9	VGND92159	62	19
VGND3147V	15	9	VGND3177V	33	19	VGND7002	40	33	VGND92168V	62	20
VGND3147V	17	11	VGND4030V	15	10	VGND7027	39	19	VGND92174	12	19
VGND3147V	18	19	VGND4030V	26	14	VGND90003V	69	11	VGND92174	17	13

Part No.	Page	Pos No	Part No.	Page	Pos No	Part No.	Page	Pos No	Part No.	Page	Pos No
VGND92174	19	12	VGND94118	75	24	VGND96132	33	23	VGND98110	38	34
VGND92174	21	19	VGND94119	3	24	VGND96133	48	22	VGND98132	24	20
VGND92174	24	15	VGND94119	72	25	VGND96136	59	41	VGND98137V	3	26
VGND92175	17	14	VGND94120	3	25	VGND9620V	80	11	VGND9813V	46	29
VGND92175	19	13	VGND94120	73	27	VGND97011	5	25	VGND9813V	50	9
VGND92176	12	34	VGND9419	11	27	VGND97012	5	26	VGND9824	1	19
VGND92176	17	15	VGND9419	78	10	VGND97026	5	27	VGND9827	80	32
VGND92176	19	23	VGND95049	32	39	VGND97027	5	28	VGND9843	68	5
VGND92176	21	38	VGND95049	70	9	VGND97041	5	29	VGND9843	78	11
VGND92176	24	16	VGND95055	80	43	VGND97042	5	30	VGND9843	79	4
VGND92177	24	17	VGND95057	33	22	VGND97052	5	32	VGND9843	81	2
VGND92196	21	37	VGND95059	78	25	VGND97053	5	33	VGND9844	30	9
VGND92197	56	17	VGND95061	24	18	VGND97054	5	34	VGND9869V	6	19
VGND92197	62	17	VGND95066	26	20	VGND97066	85	10	VGND9869V	56	30
VGND92198	56	16	VGND95067	78	28	VGND97067	85	11	VGND9869V	62	23
VGND92198	62	16	VGND95068	32	20	VGND97068	85	12	VGND9889	69	13
VGND92212	12	33	VGND9606	26	21	VGND97069	85	13	VGND9906V	26	24
VGND9295	21	42	VGND9607	26	22	VGND9751	80	45	VGND9906V	56	23
VGND9295	22	16	VGND9607	45	14	VGND9778	80	12	VGND9906V	62	24
VGND9295	23	20	VGND9607	56	21	VGND9779	42	17	VGND9954V	62	25
VGND9295	48	21	VGND9607	58	11	VGND9779	49	15	VGND9954V	88	14
VGND9346	52	19	VGND9607	62	22	VGND9779	50	21	VGNK622V	37	11
VGND9346	53	47	VGND9607	88	13	VGND9779	80	39	VGP0902RL(8)	77	3
VGND9346	64	52	VGND96086	41	22	VGND9780	80	31	VGPZ100	30	15
VGND9346	80	41	VGND96088	21	41	VGND98026V	12	20	VGPZ11V	83	8
VGND9392V	56	31	VGND96098	41	24	VGND98026V	17	16	VGPZ160V	3	27
VGND9393V	26	19	VGND96104	23	21	VGND98026V	19	22	VGPZ160V	42	14
VGND94053	3	21	VGND96105	23	22	VGND98026V	21	39	VGPZ160V	49	17
VGND94058	41	27	VGND96107	41	25	VGND98026V	24	19	VGPZ160V	85	8
VGND94085	21	20	VGND96112	59	40	VGND9807V	56	22	VGPZ170V	31	18
VGND94117	3	22	VGND96127	22	9	VGND9808V	26	23	VGPZ19V	23	6
VGND94117	74	24	VGND96129	21	40	VGND98102V	43	11	VGPZ25V	38	38
VGND94118	3	23	VGND96130	23	23	VGND98109	38	35	VGPZ264K0	82	5

Part No.	Page	Pos No	Part No.	Page	Pos No	Part No.	Page	Pos No	Part No.	Page	Pos No
VGPZ302V	21	21	VGRL0144K0	31	20	VGRL0658K0	87	18	VGRL274	10	10
VGPZ302V	31	19	VGRL0145K0	31	21	VGRL0660K0	87	19	VGRL275	9	5
VGPZ302V	39	20	VGRL0156K0	34	18	VGRL0766	39	22	VGRL282V	78	14
VGPZ365V	51	11	VGRL0178K0	36	19	VGRL0844K0	16	9	VGRL287K0	17	17
VGPZ365V	87	17	VGRL0187K0	37	13	VGRL0845K0	16	10	VGRL287K0	18	3
VGPZ415K0	6	20	VGRL0189K0	37	14	VGRL0850K0	13	12	VGRL290	78	29
VGPZ415K0	7	17	VGRL02	33	25	VGRL0887K0	12	22	VGRL290	79	10
VGPZ451K0	12	21	VGRL0233K0	36	20	VGRL131V	35	26	VGRL290	79	11
VGPZ455V	82	10	VGRL0251K0	37	15	VGRL132K0	35	27	VGRL290	79	8
VGPZ456	38	36	VGRL0252K0	37	16	VGRL133K0	32	25	VGRL290	79	9
VGPZ457	38	33	VGRL0348K0	24	21	VGRL140K0	32	26	VGRL299	26	43
VGPZ465	15	11	VGRL0349K0	24	22	VGRL147K0	32	27	VGRL299	56	24
VGPZ474V	34	17	VGRL0376K0	69	15	VGRL16K0	32	28	VGRL299	62	26
VGPZ477V	33	24	VGRL0377K0	69	16	VGRL171V	33	27	VGRL309V	78	15
VGPZ479	36	18	VGRL0382	21	22	VGRL172V	33	28	VGRL31	34	21
VGPZ480V	32	21	VGRL0383K0	31	22	VGRL173V	33	29	VGRL310	37	17
VGPZ482	37	21	VGRL0384K0	31	23	VGRL1V	33	26	VGRL311V	37	18
VGPZ483V	35	23	VGRL0387K0	32	23	VGRL224	33	30	VGRL335	37	19
VGPZ99	30	16	VGRL0401K0	69	17	VGRL227V	34	19	VGRL346K0	18	4
VGRK26	68	13	VGRL0411K0	31	24	VGRL22K0	35	28	VGRL347K0	17	18
VGRK27	68	6	VGRL0421K0	32	24	VGRL247V	36	21	VGRL358K0	24	24
VGRK29	68	14	VGRL0426K0	71	9	VGRL248	36	22	VGRL362	69	18
VGRK3	68	7	VGRL0427K0	71	10	VGRL257K0	34	20	VGRL363	69	19
VGRK30	68	15	VGRL0449K0	14	5	VGRL260V	35	29	VGRL368K1	69	20
VGRK4	68	8	VGRL0450K0	14	6	VGRL263V	35	30	VGRL369K1	69	21
VGRL00280	78	12	VGRL0499K0	35	25	VGRL263V	70	10	VGRL370K1	69	22
VGRL00281	78	13	VGRL0502K0	46	32	VGRL265V	33	31	VGRL371K1	69	23
VGRL00461	37	12	VGRL0525K0	24	23	VGRL269	9	1	VGRL389K0	32	29
VGRL00518	81	3	VGRL0560K0	13	11	VGRL270	9	2	VGRL38V	31	25
VGRL00613K0	15	12	VGRL0603K0	16	8	VGRL271	9	3	VGRL390	32	30
VGRL00629	13	19	VGRL062K0	2	7	VGRL272	6	22	VGRL391	32	31
VGRL00637	26	44	VGRL0630K0	4	8	VGRL272	7	20	VGRL399K0	54	21
VGRL0128K0	35	24	VGRL0631K0	4	9	VGRL272	9	4	VGRL400K0	54	22

Part No.	Page	Pos No	Part No.	Page	Pos No	Part No.	Page	Pos No	Part No.	Page	Pos No
VGRL403K0	69	24	VGRL507K0	78	17	VGRL821K0	12	23	VGTP00512	58	10
VGRL404K0	71	11	VGRL50V	33	32	VGRL848K0	21	26	VGTP00512	62	21
VGRL406K0	54	23	VGRL510V	78	18	VGRL849	12	24	VGTP00512	88	16
VGRL407K0	38	22	VGRL517K0	41	11	VGRL862V	12	25	VGTP438	45	15
VGRL408K0	38	23	VGRL51V	33	33	VGRL862V	17	19	VGTP438	56	26
VGRL409K0	69	25	VGRL522K0	24	25	VGRL862V	19	16	VGTP438	58	12
VGRL410K0	69	26	VGRL523K0	24	26	VGRL862V	21	27	VGTP438	62	28
VGRL414K0	31	26	VGRL526K0	24	27	VGRL863V	36	27	VGTR003096	76	2
VGRL418K0	31	27	VGRL52V	33	34	VGRL864V	37	20	VGTR003273	76	1
VGRL419K0	32	32	VGRL538K0	66	11	VGRL878K0	34	25	VGTR2011	76	3
VGRL429K0	32	33	VGRL54	31	28	VGRL879V	34	26	VGTR2035	76	4
VGRL430K0	32	34	VGRL540K0	66	12	VGRL8K0	33	38	VGTR2037	76	5
VGRL435K0	54	24	VGRL541	68	9	VGRL939V	88	15	VGTR2071	76	6
VGRL442K0	3	28	VGRL546K1	68	10	VGRV0108K0	4	10	VGTR2073	76	7
VGRL444K0	66	10	VGRL547K0	68	11	VGRV70K1	69	27	VGTR2077	76	8
VGRL466K0	32	35	VGRL548K0	68	12	VGRV71K1	69	28	VGTR3097	32	40
VGRL467K0	34	22	VGRL551K0	70	11	VGRV73V	69	29	VGTR3183	76	9
VGRL468K0	34	23	VGRL552K0	70	12	VGTA195V	39	21	VGTR3313	76	10
VGRL469K0	36	23	VGRL55V	33	35	VGTH100V	3	29	VGTR3314	76	11
VGRL470K0	36	24	VGRL567K0	54	25	VGTH100V	18	22	VGTR3315	76	12
VGRL472V	36	25	VGRL567K0	66	13	VGTH100V	42	15	VGTR996	82	16
VGRL473V	35	31	VGRL569K0	33	37	VGTH100V	43	12	VGUH697V	2	8
VGRL474V	35	32	VGRL56V	33	36	VGTH100V	48	23	VGWA001342	26	25
VGRL475	34	24	VGRL578K0	38	24	VGTH100V	49	3	VGWA001418	14	7
VGRL479	36	26	VGRL579K0	38	25	VGTH100V	50	18	VGWA00154	1	20
VGRL481K0	32	36	VGRL599K0	35	33	VGTH100V	53	46	VGWA001740	7	21
VGRL484K0	21	23	VGRL627K0	66	14	VGTH100V	56	25	VGWA001741	7	22
VGRL486K0	19	14	VGRL628K0	66	15	VGTH100V	62	27	VGWA002016K0	5	31
VGRL494	19	15	VGRL637	26	45	VGTH100V	80	14	VGWA002023	13	13
VGRL494	21	24	VGRL642K0	70	13	VGTH66	80	15	VGWA002033K0	6	24
VGRL501K0	21	25	VGRL643K0	70	14	VGTH9	80	16	VGWA002033K0	7	23
VGRL505	71	12	VGRL661K0	87	20	VGTP00512	45	13	VGWA002034K0	6	30
VGRL506K0	78	16	VGRL693	80	13	VGTP00512	56	20	VGWA002034K0	7	28

Part No.	Page	Pos No	Part No.	Page	Pos No	Part No.	Page	Pos No	Part No.	Page	Pos No
VGWA002189K0	80	17	VGWA01590	67	10	VGWA036	26	35	VGWA1213V	44	10
VGWA00252	26	26	VGWA01595	16	11	VGWA037	26	30	VGWA1235	80	23
VGWA00368	14	15	VGWA01595	85	9	VGWA0455	24	31	VGWA1249	41	16
VGWA00368	15	26	VGWA01657	4	13	VGWA0467	38	26	VGWA1250	35	36
VGWA00368	24	38	VGWA0168V	26	29	VGWA0512	3	32	VGWA1250	41	17
VGWA00373	24	28	VGWA01800	15	15	VGWA0523	30	10	VGWA1314	25	2
VGWA0043	14	8	VGWA01851K0	80	18	VGWA0524	30	11	VGWA1327	15	18
VGWA0043	24	29	VGWA01852K0	80	19	VGWA056	22	11	VGWA1328	15	19
VGWA0051	26	27	VGWA01853K0	80	20	VGWA056	41	14	VGWA1363V	17	21
VGWA00633	14	9	VGWA02015	21	29	VGWA0570	39	25	VGWA1363V	18	7
VGWA00633	24	30	VGWA02015	33	39	VGWA0601V	23	7	VGWA1389V	15	20
VGWA00659	45	16	VGWA02019	19	17	VGWA0611	80	21	VGWA1413	63	12
VGWA00659	56	27	VGWA02028	15	16	VGWA0612	80	22	VGWA1444V	24	33
VGWA00659	58	13	VGWA02044K0	5	8	VGWA0614	82	6	VGWA1489	85	16
VGWA00659	62	29	VGWA02050	16	12	VGWA0637	44	9	VGWA1490K1	31	31
VGWA00686	26	28	VGWA02054K0	17	20	VGWA0647	4	14	VGWA1493	31	32
VGWA00763	26	34	VGWA02054K0	18	5	VGWA077	14	10	VGWA1494	84	4
VGWA00909	85	24	VGWA02057	18	6	VGWA077	24	32	VGWA1495	84	5
VGWA00999	25	1	VGWA02063K0	16	13	VGWA0784	83	4	VGWA158	25	5
VGWA01002K0	69	30	VGWA02065	20	11	VGWA083	20	13	VGWA1589	15	21
VGWA01048	3	30	VGWA02067K0	16	14	VGWA0887	39	26	VGWA1600	54	26
VGWA01177	41	12	VGWA02070	2	9	VGWA0887	41	15	VGWA1684V	6	25
VGWA01178	41	13	VGWA02073	19	18	VGWA0891	39	27	VGWA1684V	7	24
VGWA01325	15	13	VGWA02076K0	46	17	VGWA0899	39	28	VGWA1702V	7	25
VGWA01374V	15	14	VGWA02077K0	16	15	VGWA0912	3	33	VGWA1717V	6	26
VGWA01411	63	11	VGWA02084	19	19	VGWA0920	14	11	VGWA1719V	6	27
VGWA0142	3	31	VGWA02085	20	12	VGWA1036	38	27	VGWA1719V	7	26
VGWA01455	67	8	VGWA02089K0	12	26	VGWA1038V	69	31	VGWA1734	8	7
VGWA01460	67	9	VGWA02092V	12	27	VGWA1040V	69	32	VGWA1735	8	8
VGWA01486	13	14	VGWA0219	39	23	VGWA1072	15	17	VGWA1736	8	9
VGWA01490K0	31	30	VGWA0225	39	24	VGWA1075K0	69	33	VGWA1737	8	10
VGWA01576	21	28	VGWA0244	43	13	VGWA1076K0	69	34	VGWA1749V	6	28
VGWA01576	22	10	VGWA0258	16	16	VGWA1159	30	12	VGWA1809	1	21

Part No.	Page	Pos No	Part No.	Page	Pos No	Part No.	Page	Pos No	Part No.	Page	Pos No
VGWA183V	45	17	VGWA442V	29	15	VGWA549	56	28	VGWA859V	79	6
VGWA1855K0	80	24	VGWA451	16	18	VGWA549	58	15	VGWA860	80	27
VGWA1991	3	34	VGWA453	31	33	VGWA54V	22	13	VGWA861	80	28
VGWA2000	13	15	VGWA490	2	10	VGWA54V	41	18	VGWA862	80	29
VGWA2001	13	16	VGWA490	46	18	VGWA552V	22	14	VGWA863	80	30
VGWA2008	21	30	VGWA491V	2	11	VGWA568	44	12	VGWA900	20	19
VGWA2016	5	9	VGWA491V	12	29	VGWA592	39	29	VGWA900	22	15
VGWA2018V	15	22	VGWA491V	18	23	VGWA606	44	13	VGWA900	41	19
VGWA2025	13	17	VGWA491V	19	21	VGWA625	3	35	VGWA904V	46	19
VGWA2048K0	7	27	VGWA491V	20	16	VGWA63	25	3	VGWA908	41	20
VGWA2055	17	22	VGWA491V	21	34	VGWA633	14	13	VGWA909	36	29
VGWA2055	18	8	VGWA491V	22	12	VGWA633	24	35	VGWA917	82	8
VGWA2055	19	20	VGWA492V	15	24	VGWA635	44	14	VGWA949V	23	25
VGWA2055	21	31	VGWA497	38	28	VGWA638	44	15	VGWA989V	69	35
VGWA2064V	20	14	VGWA498	17	23	VGWA649V	40	35	VGWA998	25	4
VGWA2069V	18	9	VGWA506	20	17	VGWA670	43	15	VGWG019	24	36
VGWA2069V	21	32	VGWA507	21	35	VGWA691	38	30	VGWP00118	11	32
VGWA2086	12	28	VGWA513	26	37	VGWA699V	17	24	VGWP119K0	11	33
VGWA2086	13	18	VGWA515	26	38	VGWA707	12	30	VGWP121K0	11	34
VGWA2087V	20	15	VGWA515	62	30	VGWA707	26	41	VGWP124K0	11	35
VGWA2096V	21	33	VGWA527	23	8	VGWA708V	29	16	VGWP125K0	11	36
VGWA2098K0	29	14	VGWA528V	21	36	VGWA709V	29	17	VGWP140	61	35
VGWA2145K0	54	27	VGWA528V	23	9	VGWA734	1	22	VGWS00149	46	37
VGWA2188K0	80	25	VGWA528V	78	19	VGWA735	1	23	VGWS0077	15	25
VGWA234	16	17	VGWA540V	23	10	VGWA736	1	24	VGWS0137	54	28
VGWA246	43	14	VGWA540V	38	29	VGWA737	1	25	VGWS0145	54	29
VGWA262V	44	11	VGWA541V	23	11	VGWA738	1	26	VGWS0177	54	30
VGWA297V	26	36	VGWA548	6	31	VGWA739	1	27	VGWS0183	46	20
VGWA366	18	10	VGWA548	45	18	VGWA767	15	27	VGWS0222	64	45
VGWA4	15	23	VGWA548	58	14	VGWA831	82	7	VGWS0223	64	46
VGWA44	14	12	VGWA548	88	17	VGWA855	80	26	VGWS060	46	31
VGWA44	24	34	VGWA549	26	40	VGWA857V	78	20	VGWS134	46	30
VGWA440	40	34	VGWA549	45	19	VGWA857V	79	5	VGWS142	54	31

Part No.	Page	Pos No	Part No.	Page	Pos No	Part No.	Page	Pos No
VGWS146	54	34	VNB0449273	29	21	VRR0480114	78	26
VGWS147	54	32	VNB0450573	29	18	VRR0480114	79	14
VGWS200	66	16	VNB0542973	29	12	VRR0535801	11	28
VGXD233V	44	16	VNB0567973	29	1	VRR0546101	11	29
VGXD296V	12	31	VNB0570573	29	13	VRR0546201	11	30
VGXD296V	20	18	VNB0570573	29	23	VRR0546501	7	19
VGXD296V	24	37	VNB0631273	27	3	VRR0546501	11	31
VGXD296V	38	31	VNB2149998	5	20	VRR0703293	67	7
VGXD296V	41	21	VNB2541878	27	1	VRR0834182	6	21
VGXD296V	71	13	VR13698033	36	2			
VGXD314	56	32	VR30392640	12	2			
VGXD314	62	31	VR30392640	17	1			
VGYD62	26	42	VR38222301	11	2			
VGYD64	26	39	VR38222302	11	3			
VGYD64	56	29	VR38222304	11	4			
VGYD64	62	32	VR38222309	11	5			
VN43603311	5	17	VR38222310	11	6			
VN43605800	5	18	VR38222324	11	7			
VN79730309	29	11	VR38222331	11	8			
VN79770282	5	19	VR38222332	7	1			
VNB0253273	29	26	VR38222333	11	9			
VNB0260073	29	28	VR38228055	78	27			
VNB0266373	29	25	VR38228055	79	12			
VNB0270473	29	22	VR38228059	78	21			
VNB0271073	57	5	VR38228059	79	1			
VNB0271073	62	8	VR38279004	78	22			
VNB0274673	81	1	VR38279004	79	13			
VNB0443173	30	1	VR39000001	71	14			
VNB0446473	57	4	VRR0050093	67	6			
VNB0446473	62	9	VRR0096801	32	22			
VNB0448873	29	19	VRR0096801	38	21			
VNB0449073	29	20	VRR0205101	7	18			
VNB0449173	32	38	VRR0298401	69	14			

6490

VGRL001345 < Mach. ID <=

Kverneland Group Geldrop BV
Nuenenseweg 165
5667KP Geldrop
Netherlands
+31 40 289 33 00
+31 40 285 32 15

© Kverneland Group

All rights reserved. No parts of this book may be reproduced, stored in a database or retrieval system, or published in any form or in any way, electronically, mechanically, optically, by print, photo print, microfilm (including micro and macro fiche), or any other means, including all video and CD systems, without prior written permission from the publisher.

Print date: 2009-02-12