MF 8210
MF 8220

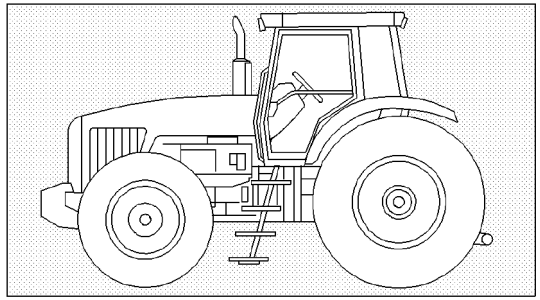

1637365M5 (0) 10/00

MASSEY FERGUSON

CONTENTS / SOMMAIRE / INHALT / CONTENUTO / SUMARIO

A2

CONTENTS

SECTION ONE

- GENERAL INFORMATION
- SYMBOLS
- GROUP INDEX ALPHA.
- RECOMMENDED STOCKING PARTS
- MARKETING KEY PARTS INDEX
- CHANGES AFTER PREVIOUS PUBLICATION INDEX
- NUMERICAL PART NUMBER INDEX

SECTION TWO

- ILLUSTRATIONS WITH REFERENCES
- PART NUMBER REFERENCE LISTS

SOMMAIRE

SECTION UNE

- INFORMATIONS GENERALES
- SYMBOLES
- GROUPES DE MONTAGE
- PIECES DONT LE STOCKAGE EST RECOMMANDE
- PIECES DE VENTES COURANTES
- CHANGEMENT DEPUIS LA DERNIERE EDITION
- INDEX NUMERIQUE PIECES

SECTION DEUX

- ILLUSTRATIONS AVEC REFERENCES
- LISTES DES NUMEROS DE REFERENCE DES PIECES

INHALT

ABSCHNITTEINS

- ALLGEMEINE HINWEISE
- SYMBOLE
- GRUPPENVERZEICHNIS
- LAGERVOSCHLAGSTEILE
- SCHWERPUNKTEILE MARKETING
- AENDERUNG GEGENEUBER VORIGER AUSGABE
- NUMMERN - INDEX

ABSCHNITT ZWEI

- ABBILDUNGEN MIT POSITIONS NUMMERN
- TEXTSEITEN MIT TEILNUMMERN

CONTENUTO

SEZIONE PRIMA

- INFORMAZIONI GENERALI
- SIMBOLI
- GRUPPO INDICE
- PEZZI CHE RECCOMANDIANO DI TENERE A MAGAZZINO
- PEZZI ESSENZIALI PER IL MARKETING
- VARIAZIONE RISPETTO ALL ULTIMA EMISSIONE
- INDICE NUMERICO

SEZIONE SECONDA

- ILLUSTRAZIONI CON REFERIMENTI
- ELENCO DEI PARTICOLARI RICAMBIO

SUMARIO

SECCION PRIMERA

- INFORMATION GENERAL
- SIMBOLOS
- GROUPOS DE MONTAJE
- RECAMBIO QUE SE RECOMIENDA MANTENER EN STOCK
- RECAMBIO SELECCIONADO POR MARKETING COMO PIEZAS CLAVE
- MOD. DESDE LA ULTIMA EDICION
- INDICE NUMERICO

SECCION SEGUNDA

- DJBUJOS CON REFERENCIAS
- LISTAS CON LOS NUMEROS DE REFERENCIA

I PART NUMBER REFERENCE LIST

(1) EXAMPLE

A	B	C	D	E	F	G	H / K	J / L
1		*1611168M4*	1		1	DIFFERENTIAL	DIFFERENTIEL DIFFERENZIALE	DIFFERENTIAL DIFFERENCIAL
2		*3619014M1*	2		1	KIT	JEU IL GRUPPO	REPARATURSATZ JUEGO
3			2	REF.2	1	CROWNWHEEL	COURONNE CORONA	TELLERRAD CORONA
4			2	REF.2	1	PINION	PIGNON PIGNONE	ZAHNRAD PINON
5	*	**3617401M5**	2	1234567	1	BOLT	BOULON BULLONE	SCHRAUBE PERNO
6	*	3617352M3	2	1234567	1	BOLT	BOULON BULLONE	SCHRAUBE PERNO

(2) EXPLANATION

COL. A — ILLUSTRATION REFERENCE NUMBER

COL. B — AN ASTERISK INDICATES A CHANGE SINCE LAST PRINT

COL. C — PART NUMBER (SEE PARAGRAPH 2)

COL. D — ITEM ALSO A COMPONENT OF AN ASSEMBLY. SEE ASSEMBLY ILLUSTRATION NUMBER INDICATED

COL. E — COMMENT (SEE SYMBOLS AND NOTES)

COL. F — QUANTITY REQUIRED (SEE NOTES BELOW)

COL. G.H.J.K.L — DESCRIPTION LANGUAGE FORMAT : ENGLISH, FRENCH, GERMAN, ITALIAN, SPANISH

II PART NUMBER IDENTIFICATION

1611168M4 = RECOMMENDED STOCKING PARTS AND MARKETING KEY PARTS

3619014M1 = RECOMMENDED STOCKING PARTS

3617401M5 = MARKETING KEY PARTS INDEX

3617352M3 = PART WITHOUT SPECIFIC MARKS

(3) SPECIAL NOTES

THE QUANTITY SHOWN IN COLUMN 'F' IS THE QUANTITY REQUIRED FOR THE PARTICULAR APPLICATION THAT IS ILLUSTRATED. WHERE THESE PARTS ARE COMPONENTS OF AN ASSEMBLY THIS REFERS TO THE QUANTITY IN ONE ASSEMBLY OR SUB-ASSEMBLY.

FOR PARTS SUCH AS SHIMS, WASHERS, ETC. AN 'X' IN THE QUANTITY COLUMN MEANS "QUANTITY AS REQUIRED"

THE PARTS BOOK NUMBER, ISSUE NUMBER AND DATE ARE SHOWN IN THE LOWER RIGHT HAND CORNER OF THE ILLUSTRATED PAGE. THE ISSUE NUMBER IS PRINTED IN BRACKETS

RECOMMENDED STOCKING PARTS

THE INDEX OF THESE PARTS INCLUDES A COLUMN QTY REPORTING THE QUANTITY USED FOR EACH PART IN THE RELEVANT FITTING.

SAFETY NOTE

WHEN ORDERING REPLACEMENT PARTS TO WHICH SAFETY DECALS WERE ORIGINALLY ATTACHED THE APPROPRIATE SAFETY DECALS MUST BE ORDERED AND FITTED.

I LISTES DES NUMEROS DE REFERENCE DES PIECES

(1) EXEMPLE

A	B	C	D	E	F	G	H / K	J / L
1		*1611168M4*	1		1	DIFFERENTIAL	DIFFERENTIEL DIFFERENZIALE	DIFFERENTIAL DIFFERENCIAL
2		*3619014M1*	2		1	KIT	JEU IL GRUPPO	REPARATURSATZ JUEGO
3			2	REF.2	1	CROWNWHEEL	COURONNE CORONA	TELLERRAD CORONA
4			2	REF.2	1	PINION	PIGNON PIGNONE	ZAHNRAD PINON
5	*	**3617401M5**	2	1234567	1	BOLT	BOULON BULLONE	SCHRAUBE PERNO
6	*	3617352M3	2	1234567	1	BOLT	BOULON BULLONE	SCHRAUBE PERNO

(2) EXPLICATIONS

COL. A — NUMERO DE REFERENCE DE L'ILLUSTRATION

COL. B — UN ASTERISQUE INDIQUE UN CHANGEMENT DEPUIS LA DERNIERE EDITION

COL. C — NUMERO DE PIECE (VOIR PARAGRAPHE 2)

COL. D — PIECE COMPRISE DANS L'ENSEMBLE DONT LE NUMERO DE REFERENCE DE L'ILLUSTRATION EST INDIQUE

COL. E — REMARQUE (VOIR SYMBOLES ET NOTES)

COL. F — QUANTITE (VOIR NOTE CI-DESSOUS)

COL. G.H.J.K.L — DESIGNATION ORDRE DES LANGUES ANGLAIS, FRANCAIS, ALLEMAND, ITALIEN, ESPAGNOL

II IDENTIFICATION DES NUMEROS DE PIECES

1611168M4 = PIECES DONT LE STOCKAGE EST RECOMMANDE ET PIECES DE VENTES COURANTES

3619014M1 = PIECES DONT LE STOCKAGE EST RECOMMANDE

3617401M5 = PIECES DE VENTES COURANTES

3617352M3 = PIECES SANS SIGNIFICATION PARTICULIERE

(3) NOTES SPECIALES

LA QUANTITE INDIQUEE DANS LA COLONNE 'F' EST CELLE APPLICABLE A L'ENSEMBLE ILLUSTRE SUR LA PAGE ADJACENTE, LE NOMBRE INDIQUE DONC LA QUANTITE DANS L'ENSEMBLE OU SOUS-ENSEMBLE ET NON POUR LA MACHINE COMPLETE.

POUR DES PIECES TELLES QUE CALES D'EPAISSEUR, RONDELLES, ETC. UN "X" DANS LA COLONNE QUANTITE SIGNIFIE "SUIVANT BESOIN".

LE NUMERO DU CATALOGUE, LE NUMERO D'EMISSION ET LA DATE SONT INDIQUES DANS LE COIN INFERIEUR DROIT DE LA PAGE ILLUSTREE. LE NUMERO D'EMISSION EST IMPRIME ENTRE PARENTHESES.

PIECES DONT LE STOCKAGE EST RECOMMANDE

L'INDEX DE CES PIECES INCLUS UNE COLONNE QTY QUI LISTE LA QUANTITE UTILISEE DE CHAQUE PIECE POUR LE MONTAGE.

NOTE DE SECURITE

LORS DU REMPLACEMENT DE PIECES MUNIES A L'ORIGINE D'UNE DECALCOMANIE DE SECURITE. LA DECALCOMANIE CORRESPONDANTE DOIT AUSSI ETRE COMMANDEE ET MONTEE.

I TEXTSEITEN MIT TEILNUMMERN

(1) BEISPIEL

A	B	C	D	E	F	G	H / K	J / L
1		*1611168M4*	1		1	DIFFERENTIAL	DIFFERENTIEL DIFFERENZIALE	DIFFERENTIAL DIFFERENCIAL
2		*3619014M1*	2		1	KIT	JEU IL GRUPPO	REPARATURSATZ JUEGO
3			2	REF.2	1	CROWNWHEEL	COURONNE CORONA	TELLERRAD CORONA
4			2	REF.2	1	PINION	PIGNON PIGNONE	ZAHNRAD PINON
5	*	**3617401M5**	2	1234567	1	BOLT	BOULON BULLONE	SCHRAUBE PERNO
6	*	3617352M3	2	1234567	1	BOLT	BOULON BULLONE	SCHRAUBE PERNO

(2) ERLAEUTERUNG

COL. A	POSITIONSNUMMER DER ABBILDUNG
COL. B	EIN STERN BEDEUTET AENDERUNG GEGENEUBER VORIGER AUSGABE
COL. C	TEILNUMMER (SEHE ABSATZ 2)
COL. D	EINZELTEIL VON KOMPLETTEIL, DESSEN POSITIONSNUMMER HIER ANGEGEBEN IST
COL. E	BEMERKUNGEN (SIEHE SYMBOLE UND HINWEISE)
COL. F	ANZAHL (SIEHE UNTENSTEHENDE ANMERKUNG)
COL. G.H.J.K.L	SPRACHEN - DESCHREIBUNG ENGLICH, FRANZOESISCH, DEUTSCH, ITALIENSCH UND SPANISCH

II FESTSTELLEN DER TEILNUMMER

1611168M4 = LAGERVORSCHLAGSTEILE UND SCHWERPUNKTEILE MARKETING

3619014M1 = LAGERVORSCHLASTEILE

3617401M5 = SCHWERPUNKTEILE MARKETING

3617352M3 = TEIL OHNE SPEZIFIKATIONS KENNZEICHNUNG

(3) ANMERKUNGEN

DIE IN SPALTE 'F' AUFGEFUEHRTE ANZAHL IST DIE AND DIESTER STELLE BENOETIGTE ANZAHL. FALLS ES SICH UMEIN EINZELTEIL EINES KOMPLETTEILS HANDEL, IST DIE ANZAHL PRO KOMPLETTEIL ORDER ZUSAM-MENBAUGEMEINT.

FUER TEILE WIE EINSTELLBLECHE, SCHEIBEN USW BEDEUTET EIN 'X' IN DER ANZAHLSPALT "ANZAHL NACH BEDARF".

DIE TEILNUMMER DER ERSATZTEILLISTE, AUSGABENUMMER UND DATUM SIND IN DER RECHTEN UNTEREN ECKE DER BILDSEITE AUFGEFUEHRT. DIE AUSGABENUMER STEHT IN KLAMMERN.

ZUR LAGERHALTUNG EMPFOHLENE ERSATZTEILE

DER ERSATZTEIL INDEX ENTHAELT EINE SPALTE "MENGE", WELCHE DIE ANZAHL DER ZUM ZUSAMMENBAU ERFORDERLICHEN ANGIBT.

WECHTIGER HINWEIS

WENN ERSETZTE TEILE BESTELLT WERDEN, BEI DENEN SICHERHEITSABZIEHBILDER WAREN, MUESSEN DIE ENTSPRECHENDEN SICHERHEITZABZIEHBILDER BESTELLT UND ANGEBRACHT WERDEN.

I ELENCO DEL PARTICOLARI RICAMBIO

(1) ESEMPION

A	B	C	D	E	F	G	H	J
							K	L
1		*1611168M4*	1		1	DIFFERENTIAL	DIFFERENTIEL DIFFERENZIALE	DIFFERENTIAL DIFFERENCIAL
2		*3619014M1*	2		1	KIT	JEU IL GRUPPO	REPARATURSATZ JUEGO
3			2	REF.2	1	CROWNWHEEL	COURONNE CORONA	TELLERRAD CORONA
4			2	REF.2	1	PINION	PIGNON PIGNONE	ZAHNRAD PINON
5	*	**3617401M5**	2	1234567	1	BOLT	BOULON BULLONE	SCHRAUBE PERNO
6	*	3617352M3	2	1234567	1	BOLT	BOULON BULLONE	SCHRAUBE PERNO

(2) SPIEGAZIONE

COL. A NUMERO DI RIFERIMENTO DELL ILLUSTRAZIONE

COL. B UN ASTERISCO INDICA UNA VARIAZIONE RISPETO ALL ULTIMA EMISSIONE

COL. C NUMERO DEL RECAMBIO (VEDER PARAGRAFO 2)

COL. D IL PARTICOLARE E ANCHE COMPONENTE DI UN GRUPPO IL CUI NUMERO DI ILLUSTRAZIONE E INDICATO

COL. E COMENTO (VEDER SIMBOLI E NOTE)

COL. F QUANTITA RECHIESTA (VEDERE NOTA A SEQUITO)

COL. G.H.J.K.L DESCRIZIONE - SEQUENZA LIGNUA : INGLESE, FRANCESE, TEDESCO, ITALIANO E SPAGNOLO

II CODICE IDENTIFICAZIONE DEL PARTICOLARE

1611168M4 = PEZZI CHE RECOMANDIANO DI TENERE A MAGAZZINO E PEZZI ESSENZIALI PER IL MARKETING

3619014M1 = PEZZI CHE RECOMANDIANO DI TENERE A MAGAZZINO

3617401M5 = PEZZI ESSENZIALI PER IL MARKETING

3617352M3 = SENZA CODICE IDENTIFICAZIONE DEL PARTICOLARE

(3) NOTE AGGIUNTIVE

LA QUANTITA INDICATA NELLA COLONNA 'F' CORRISPONDE ALLA QUANTITA RICHIESTA PER LA PARTICOLARE APPLICAZIONE ILLUSTRATA. QUALORA LA PARTE SIA COMPONENTE DI UN GRUPPO, LA QUANTITA INDICATA SI REFERISCE ALLA QUANTITA CONTENUTA NEL GRUPPO.
PER PARTICOLARI COME SPESSORI, RONDELLE ETC. UNA 'X' NELLA COLONNA DELLA QUANTITA STA A INDICARE "QUANTITA A RICHIESTA"

IL NUMERO DI RIFERIMENTO DEL CATALOGO, IL NUMERO DI EDIZIONE E LA DATA SONO RIPORTATI IN BASSO A DESTRA NELLA PAGINA ILLUSTRATIVA.

PEZZI CHE RECCOMANDIANO DI TENERE A

L'INDICE DELA LISTA RICAMBI INCLUDE UNA COLONNA QTY CHE INDICA LA QUANTITA PER OGNI CODICE RICAMBI NECESSARIA PER IL MONTAGIO.

NOTA PER LA SICUREZZA

QUANDO VIENE ORDINATO UN PEZZO AL QUALE ERANO ORIGINARIAMENTE APPLICATE LE DECALCOMANIE PER LA SICUREZZA ANCHE QUESTE ULTIME DEVONO ESSERE ORDINATE E APPLICATE AL PEZZO PRIMA DELLA CONSEGNA AL CLIENTE.

I LISTAS CON LOS NUMEROS DE REFERENCIA DE LAS PIEZAS

(1) EJEMPLO

A	B	C	D	E	F	G	H / K	J / L
1		***1611168M4***	1		1	DIFFERENTIAL	DIFFERENTIEL DIFFERENZIALE	DIFFERENTIAL DIFFERENCIAL
2		*3619014M1*	2		1	KIT	JEU IL GRUPPO	REPARATURSATZ JUEGO
3			2	REF.2	1	CROWNWHEEL	COURONNE CORONA	TELLERRAD CORONA
4			2	REF.2	1	PINION	PIGNON PIGNONE	ZAHNRAD PINON
5	*	**3617401M5**	2	1234567	1	BOLT	BOULON BULLONE	SCHRAUBE PERNO
6	*	3617352M3	2	1234567	1	BOLT	BOULON BULLONE	SCHRAUBE PERNO

(2) EXPLICACION

COL. A NUMERO DE REFERENCIA DEL DIBUJO

COL. B UN ASTERISCO INDICA UNA MODIFICATION DESDE LA ULTIMA EDICION

COL. C NUMERO DE PIEZA (VER PARAGRAFO 2)

COL. D PIEZA INCLUIDA EN EL CONJUNTO CUYO NUMERO DE REFERENCIA DE DIBUJO SE INDICA COMENTARIO (VEANSE LOS SIMBOLOS Y LAS NOTAS)

COL. E CANDIDAD NECESARIA (VER NOTA A CONTINUACION)

COL. F CANDIDAD NECESARIA (VER NOTA A CONTINUACION)

COL. G.H.J.K.L DESCRIPCION - FORMATO DE IDIOMA - INGLES, FRANCES, ALEMAN, ITALIANO Y ESPANOL

II IDENTIFICATION DE NUMERO DE REFERENCIA

1611168M4 = RECAMBIO QUE SE RECOMENDA MANTENER EN STOCK Y RECAMBIO SELECCIONADO POR MARKETING COMO PIEZAS CLAVE

3619014M1 = RECAMBIO QUE SE RECOMIENDA MANTENER EN STOCK

3617401M5 = RECAMBIO SELECCIONADO POR MARKETING COMO PIEZAS CLAVE

3617352M3 = RECAMBIO SIN MARCAS ESPECIFICAS

(3) NOTAS ESPECIALES

LA CANTIDAD INDICADA EN LA COLUMNA 'F' ES LA CANTIDAD NECESARIA PARA EL CONJUNTO DISENADO EN LA PAGINA CONTIGUA, EL NUMERO POR LO TANTO INDICA LA CANTIDAD CORRESPONDIENTE AL CONJUNTO O SUBCONJUNTO Y NO A LA MAQUINA COMPLETA.

PARA DETERMINADAS PIEZAS COMO ESPACIADORES, ARANDELAS, ETC. UNA 'X' EN LA COLUMNA DE CANDIDADES INDICA "SEGUN NECESIDADES".

LA REFERENCIA DEL CATALOGO NUMERO Y FECHA DE EDICION ESTAN IMPRESAS EN EL ANGULO DERECHO INFERIOR DE LA PAGINA ILLUSTRADA EL NUMERO DE EDICION ESTA INDICADO ENTRE PARENTESIS.

RECAMBIO QUE SE RECOMIENDIA MANTENER EN STOCK

L'INDEX NUMERICO DE ESTAS PIEZAS INCLUSO UNA COLUMNA QTY QUE LISTA LA CANTIDAD UTILISADA DE CADA PIEZA POR MEL MONTAJE.

AVISO DE SEGURIDAD

CUANDO SE PIDEN PIEZAS DE REPUESTO QUE ORIGINALIMENTE LLEVABAN CALCOMANIAS DE SEGURIDAD HAY QUE PEDIR Y COLOCAR TAMBIEN LAS CALCOMANIAS APROPIADAS.

SYMBOLS / SYMBOLES / SYMBOLE / SIMBOLI / SIMBOLOS

A8

	FOUR WHEEL DRIVE	4 ROUES MOTRICES 4 RUEDAS MOTRIZ	4 RAD ANTRIEB 4 RUEDAS MOTRIZ
	TWO WHEEL DRIVE	2 ROUES MOTRICES 2 RUEDAS MOTRIZ	2 RAD ANTRIEB 2 RUEDAS MOTRIZ
	FOR GERMANY ONLY OR ANY TEXT IN GERMAN ONLY	POUR ALLEMAGNE SEULEMENT OU EN ALLEMAND PARA ALEMANIA SOLAMENTE O EN ALEMAN SOLAMENTE	NUR FUER DEUTSCHLAND ODER TEXT NUR IN DEUTSCH PARA ALEMANIA SOLAMENTE O EN ALEMAN SOLAMENTE
	FOR FRANCE ONLY OR ANY TEXT IN FRENCH ONLY	POUR FRANCE SEULEMENT OU EN FRANÇAIS PARA FRANCIA SOLAMENTE O EN FRANCES SOLAMENTE	NUR FUER FRANKREICH ODER TEXT NUR IN FRANZOESICH PARA FRANCIA SOLAMENTE O EN FRANCES SOLAMENTE
	FOR ITALY ONLY OR ANY TEXT IN ITALIAN ONLY	POUR ITALIE SEULEMENT OU EN ITALIEN PARA ITALIA SOLAMENTE O EN ITALIANO SOLAMENTE	NUR FUER ITALIEN ODER TEXT NUR IN ITALIENSCH PARA ITALIA SOLAMENTE O EN ITALIANO SOLAMENTE
	FOR UK ONLY OR ANY TEXT IN ENGLISH ONLY	POUR ROYAUME UNI SEULEMENT OU EN ANGLAIS PARA INGLATERRA SOLAMENTE O EN INGLES SOLAMENTE	NUR FUER ENGLAND ODER TEXT NUR IN ENGLISCH PARA INGLATERRA SOLAMENTE O EN INGLES SOLAMENTE
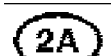	FOR AMERICAS REGION	POUR AMERIQUES PARA REGION DE LAS AMERICAS SOLAMENTE	FUER AMERICA PARA REGION DE LAS AMERICAS SOLAMENTE
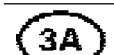	FOR ASIA/AFRICA/AUSTRALASIA REGION	POUR ASIE/AFRIQUE/AUSTRALASIE PARA ASIA/AGRICA/AUSTRALASIA SOLAMENTE	FUER ASIEN/AFRIKA/AUSTRALIEN PARA ASIA/AFRICA/AUSTRALASIA SOLAMENTE
	FOR EXPORT EUROPE	POUR EXPORT EUROPE PARA EXPORTACION EUROPA	FUER EUROPA PARA EXPORTACION EUROPA
	FOR UNITED STATES OF AMERICA	POUR ETATS UNIS D'AMERIQUE PARA EE UU DE AMERICA	FUER USA PARA EE UU DE AMERICA
	FOR AUSTRALIA	POUR AUSTRALIE PARA AUSTRALIA	FUER AUSTRALIEN PARA AUSTRALIA
	FOR SWEDEN	POUR SUEDE PARA SUECA	FUER SCHWEDEN PARA SUECA
	FOR NORWAY	POUR NORVEGE PARA NORVEGA	FUER NORWEGEN PARA NORVEGA
	FOR SOUTH AFRICA	POUR AFRIQUE DU SUD PARA AFRICA DEL SUR	FUER SUED-AFRIKA PARA AFRICA DEL SUR
	REPLACE AND REPAIR OLD IS NOT INTERCHANGEABLE WITH NEW	REMPLACE ET RECHANGE NON INTERCHANGEABLE SOSTITUIRE E RIPARARE/NUOVO-VECCHIO NON INTERC.	FUER ERSATZ ALTE VERSION NICHT AUSTAUS. MIT NEUER VERSION REEMPLAZAR Y REPARAR/LA ANTERIOR NO ES INTERCAM. CON LA NUEVA
	REPLACE AND REPAIR - OLD AND NEW INTERCHANGEABLE	REMPLACE ET RECHANGE - INTERCHANGEABLE SOSTITUIRE E RIPARARE/NUOVO-VECCHIO SONO INTERC.	FUER ERSATZ - ALTE VERSION AUSTAUS. MIT NEUER VERSION REEMPLAZAR Y REPARAR/ANTERIOR Y NUEVAS SON INTERCAMB.

SYMBOLS / SYMBOLES / SYMBOLE / SIMBOLI / SIMBOLOS

A9

RIGHT HAND	DROITE DESTRA	RECHTS DERECHA
LEFT HAND	GAUCHE SINISTRA	LINKS IZQUIERDA
WIDTH	LARGEUR LARGHEZZA	BREITE ANCHURA
LENGTH	LONGUEUR LUNGHEZZA	LANGE LONGITUD
THICKNESS	EPAISSEUR SPESSEZZA	STAERKE ESPESOR
DIAMETER	DIAMETRE DIAMETRO	DURCHMESSER DIAMETRO
NUMBER OF TEETH/SPLINES	NOMBRE DE DENTS/CANNELURES NUMERO DE DENTES/CALETTATURAS	ANZAHL DER ZAEHNE/VERZAHNUNG NUMERO DE DIENTES/RANURAS
TOP	HAUT PARTE SUPERIORE	OBEN PARTE SUPERIOR
BOTTOM	BAS PARTE INFERIORE	UNTEN PARTE INFERIOR
FROM SERIAL OR ENGINE NUMBER	A PARTIR DU NUMERO DE SERIE DU NUMERO DE MOTEUR DESDE EL NUMERO	AB SERIEN-ODER MOTOR NUMMER DESDE EL NUMERO
UP TO SERIAL OR ENGINE NUMBER	JUSQU'AU NUMERO DE SERIE OU NUMERO DE MOTEUR HASTA EL NUMERO	BIS HASTA EL NUMERO
REPAIRS AND REPLACES	REMPLACE ET RECHANGE SURROGARE Y RICAMBIO	ERSETZT REEMPLAZA Y SUSTIUYE
SEE PAGE - REFERENCE NUMBER	VOIR PAGE - NUMERO DE REFERENCE VER PAGINA - NUMERO DE REFERENCIA	SIEHE SEITE - POSITIONSNUMMER VER PAGINA NUMERO DE REFERENCIA
ALTERNATIVE	ALTERNATIVE ALTERNATIVO	WAHLWEISE ALTERNATIVO
NOT SERVICED, ORDER	PAS FOURNIES, COMMANDER NO SUMINISTRADAS, PEDIR	NICHT LIEFERTEILE, BESTELLE NO SUMINISTRADAS, PEDIR
WITHOUT OR NOT FOR. EXAMPLE: NOT FOR ENGLAND	SANS OU PAS POUR EXAMPLE : PAS POUR ANGLETERRE SON O NO PARA. EJEMPLO : NO PARA INGHILTERRA	OHNE ODER NICHT FUER. BEISPEL : FUER DEUTSCHLAND SON O NO PARA. EJEMPLO : NO PARA INGLETERRA

	A10	

RESERVED

10

1-ZA06-009-E

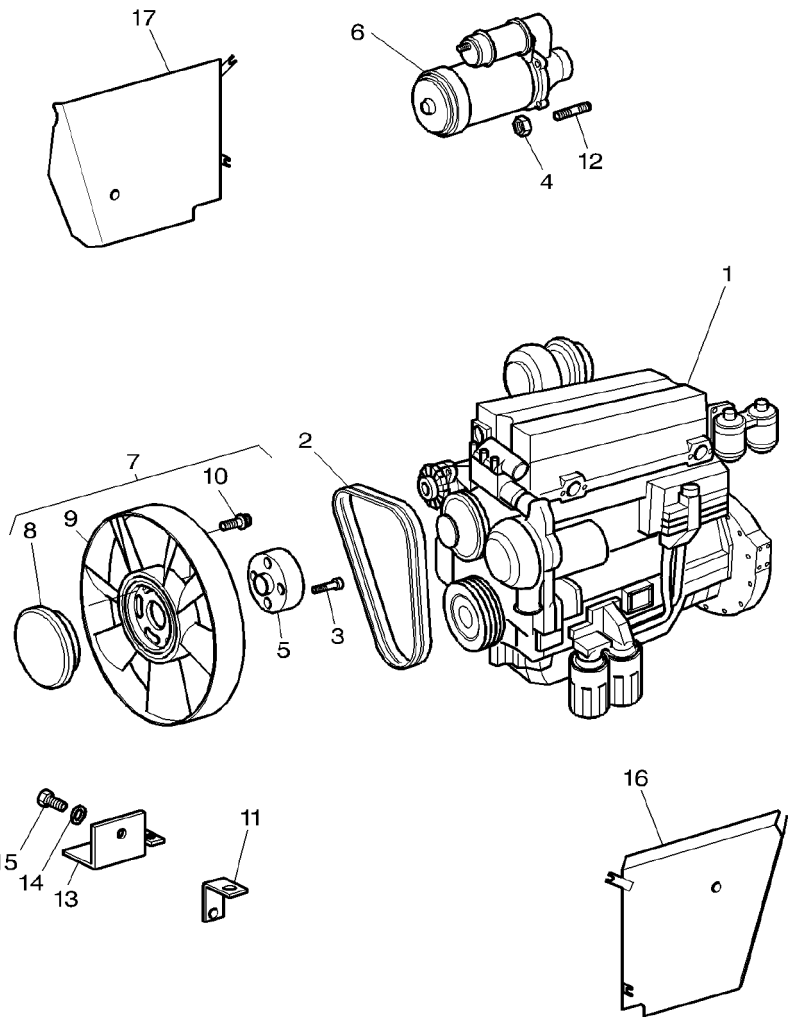

1	3779022M1	PEL. YH31441	**1**	ENGINE	MOTEUR MOTORE	MOTOR MOTOR
1	4222878M91		**1**	SHORT ENGINE	BLOC EMBIELLE MOTORE ALLEGGER.	RUMPFMOTOR BLOQUE EMBIELADO
2	***3617180M91***	◀▶ 1470MM	**1**	KIT, BELT	JEU COURROIES KIT CINGHIA	RIEMENSATZ CORREAS JUEGO
3	3009287X1	M8X40	**4**	SCREW METRIC	VIS METRIQUE VITE METRICA	SCHRAUBE METR TORNILLO METRICO
4	3009693X1	M10	**3**	NUT METRIC	ECROU METRIQUE DADO METRICO	MUTTER METRISCH TUERCA METRICO
5	3780201M1	⧗ 27MM	**1**	SPACER	ENTRETOISE DISTANZIALE	ABSTANDSTUECK PIEZA DISTANCIA
6	3581576M3	👁 10−40 No 1	**1**	STARTERMOTOR	DEMARREUR MOTORINO AVVIAM.	ANLASSER MOTOR ARRANQUE
7	3781005M91	➡| H286008	**1**	CLUTCH	EMBRAYAGE FRIZIONE	SCHALTKUPPLUNG EMBRAGUE
8	3780206M1	7 ➡| H286008	**1**	CLUTCH	EMBRAYAGE FRIZIONE	SCHALTKUPPLUNG EMBRAGUE
8	3783350M1	|➡ H286009	**1**	CLUTCH	EMBRAYAGE FRIZIONE	SCHALTKUPPLUNG EMBRAGUE
9	3781006M1	7	**1**	FAN	VENTILATEUR VENTOLA	LUEFTER VENTILADOR
10	3009920X1	7 M8X16	**4**	PLOUGH BOLT	VIS A EMBASE VITE TESTA TONDA	SENKSCHLOSSSCHRB TORNILLO ALOJ C
11	3782028M1		**1**	STRAP	PATTE CORREGGIA	LASCHE FAJA
12	**391005X1**	M10X25	**3**	STUD	GOUJON PRIGIONIERO	STEHBOLZEN ESPARRAGO
13	3779643M2		**1**	STRAP	PATTE CORREGGIA	LASCHE FAJA
14	385361X1		**1**	WASHER METRIC	RONDELLE METR. RONDELLA METRICO	SCHEIBE METRISCH ARANDELA METRICO
15	390246X1		**1**	BOLT	BOULON BULLONE	MASCH.SCHRAUBE PERNO
16	3782008M5	◀	**1**	COWL	GARANT CAPPOTTATURA	AUFSATZ CAPERUZA
17	3782009M4	▶	**1**	COWL	GARANT CAPPOTTATURA	AUFSATZ CAPERUZA

Engine And Equipment
Moteur Et Equipement
Enginzubehoer
Motore E Equipaggiamento
Motor Y Equipamente

10-10

With Pneumatic Brake
Avec Freinage Pneumatique
Mit Luftdruckbremse
Con Freno Pneumatico
Con Freno Neumatico

1-ZA06-018-A

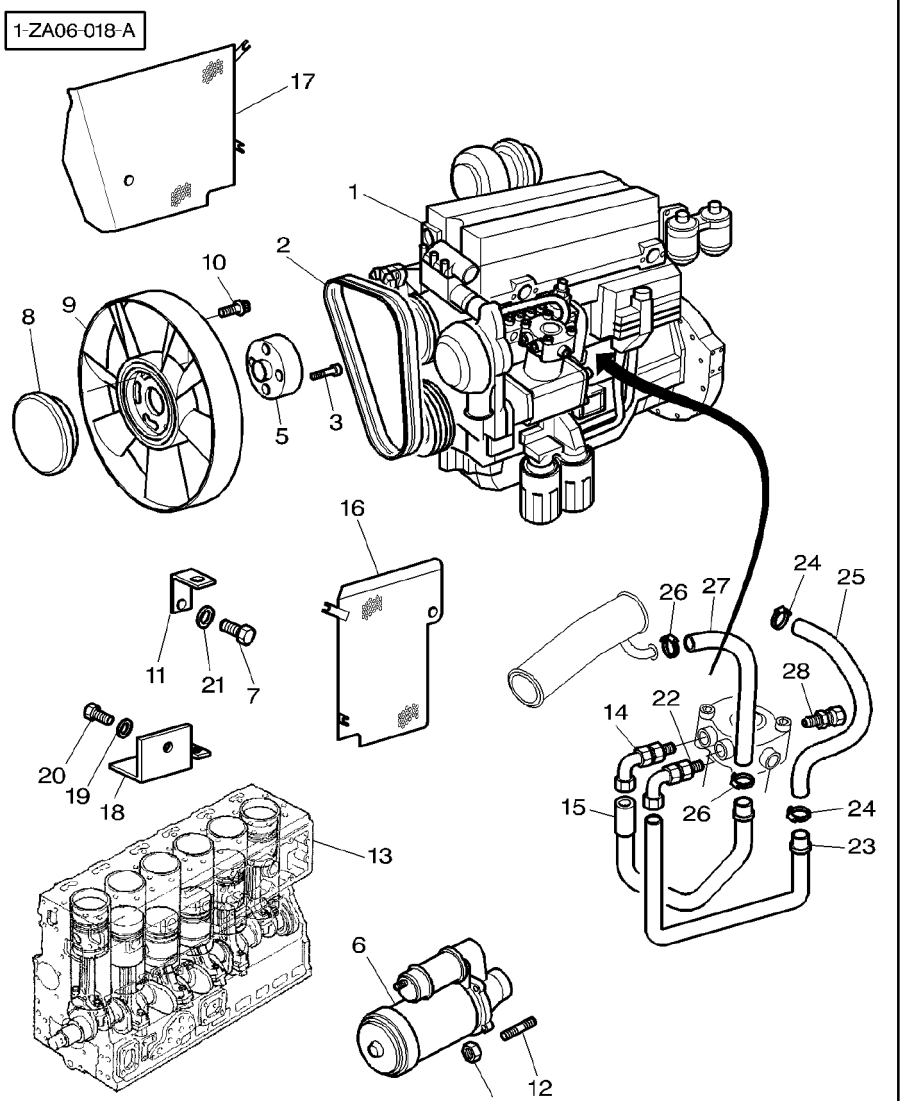

1	3779631M1	PEL. XXXXX MF 8210	**1**	ENGINE	MOTEUR MOTORE	MOTOR MOTOR
1	3779632M1	PEL. YK31476 MF 8220	**1**	ENGINE	MOTEUR MOTORE	MOTOR MOTOR
2	***3617180M91***	◀▶ 1470MM	**1**	KIT, BELT	JEU COURROIES KIT CINGHIA	RIEMENSATZ CORREAS JUEGO
3	3009287X1	M8X40 MF 8210	**4**	SCREW METRIC	VIS METRIQUE VITE METRICA	SCHRAUBE METR TORNILLO METRICO
3	3009288X1	M8X50 MF 8220	**4**	SCREW METRIC	VIS METRIQUE VITE METRICA	SCHRAUBE METR TORNILLO METRICO
4	3009693X1	M10	**3**	NUT METRIC	ECROU METRIQUE DADO METRICO	MUTTER METRISCH TUERCA METRICO
5	3780201M1	⧗ 27MM MF 8210	**1**	SPACER	ENTRETOISE DISTANZIALE	ABSTANDSTUECK PIEZA DISTANCIA
5	3784034M1	⧗ 37MM MF 8220	**1**	SPACER	ENTRETOISE DISTANZIALE	ABSTANDSTUECK PIEZA DISTANCIA
6	3581576M3	👁 10-40 No 1	**1**	STARTERMOTOR	DEMARREUR MOTORINO AVVIAM.	ANLASSER MOTOR ARRANQUE
7	339761X1	M8X25	**2**	SCREW METRIC	VIS METRIQUE VITE METRICA	SCHRAUBE METR TORNILLO METRICO
8	3783350M1	MF 8210	**1**	CLUTCH	EMBRAYAGE FRIZIONE	SCHALTKUPPLUNG EMBRAGUE
8	3783352M1	MF 8220	**1**	CLUTCH	EMBRAYAGE FRIZIONE	SCHALTKUPPLUNG EMBRAGUE
9	3781006M1	MF 8210	**1**	FAN	VENTILATEUR VENTOLA	LUEFTER VENTILADOR
9	3780204M1	MF 8220	**1**	FAN	VENTILATEUR VENTOLA	LUEFTER VENTILADOR
10	3009920X1	M8X16	**4**	PLOUGH BOLT	VIS A EMBASE VITE TESTA TONDA	SENKSCHLOSSSCHRB TORNILLO ALOJ C
11	3782028M1		**1**	STRAP	PATTE CORREGGIA	LASCHE FAJA
12	**391005X1**	M10X25	**3**	STUD	GOUJON PRIGIONIERO	STEHBOLZEN ESPARRAGO
13	4222878M91		**1**	SHORT ENGINE	BLOC EMBIELLE MOTORE ALLEGGER.	RUMPFMOTOR BLOQUE EMBIELADO
14	3784396M1	M26	**1**	ELBOW NIPPLE	RACCORD COUDE NIPPLO GOMITO	WINKELSTUTZEN CODO DE UNION
15	3784448M1		**1**	TUBE	TUBE TUBO	ROHR TUBO
16	3780390M1	◀	**1**	COWL	GARANT CAPPOTTATURA	AUFSATZ CAPERUZA
17	3782009M4	▶	**1**	COWL	GARANT CAPPOTTATURA	AUFSATZ CAPERUZA
18	3779643M2		**1**	STRAP	PATTE CORREGGIA	LASCHE FAJA
19	385361X1		**1**	WASHER METRIC	RONDELLE METR. RONDELLA METRICO	SCHEIBE METRISCH ARANDELA METRICO
20	390246X1		**1**	BOLT	BOULON BULLONE	MASCH.SCHRAUBE PERNO
21	390972X1		**2**	WASHER METRIC	RONDELLE METR. RONDELLA METRICO	SCHEIBE METRISCH ARANDELA METRICO

1-ZA06-018-A

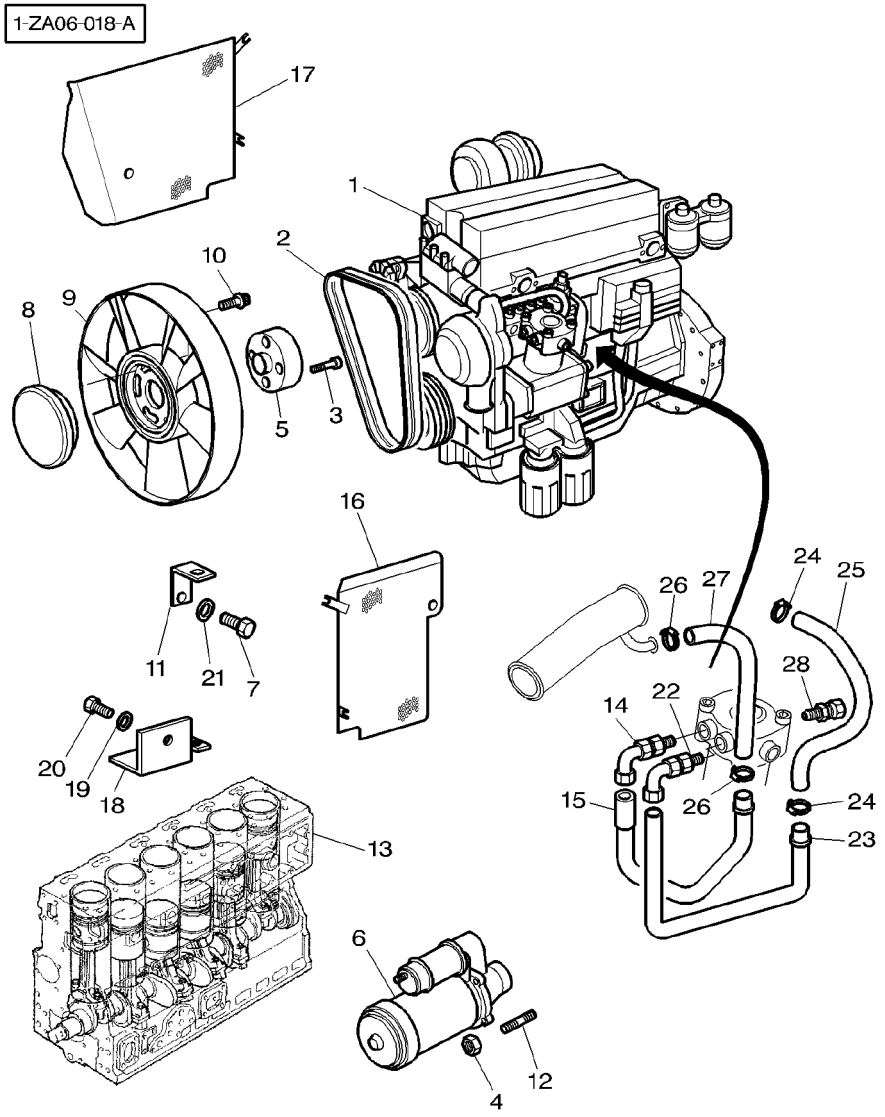

22	3784395M1	M16	**1**	ELBOW NIPPLE	RACCORD COUDE NIPPLO GOMITO	WINKELSTUTZEN CODO DE UNION
23	3784447M1		**1**	TUBE	TUBE TUBO	ROHR TUBO
24	3000483X1		**2**	CLAMP	COLLIER FASCETTA	HALTESCHELLE ABRAZADERA
25	3784573M1	◀▶ 220MM	**1**	HOSE	DURITE TUBO FLESSIBILE	SCHLAUCH FLEXIBLE
26	338615X1		**2**	CLAMP	COLLIER FASCETTA	HALTESCHELLE ABRAZADERA
27	3616258M2	◀▶ 1050MM	**1**	HYDR HOSE	FLEXIBLE TUBOFLEX IDRAUL	HYDR SCHLAUCH TUBO HIDRAULICO
28	3784398M1	M26	**1**	UNION	RACCORD RACCORDO	VERSCHRAUBUNG RACOR

1-ZA06-013-B

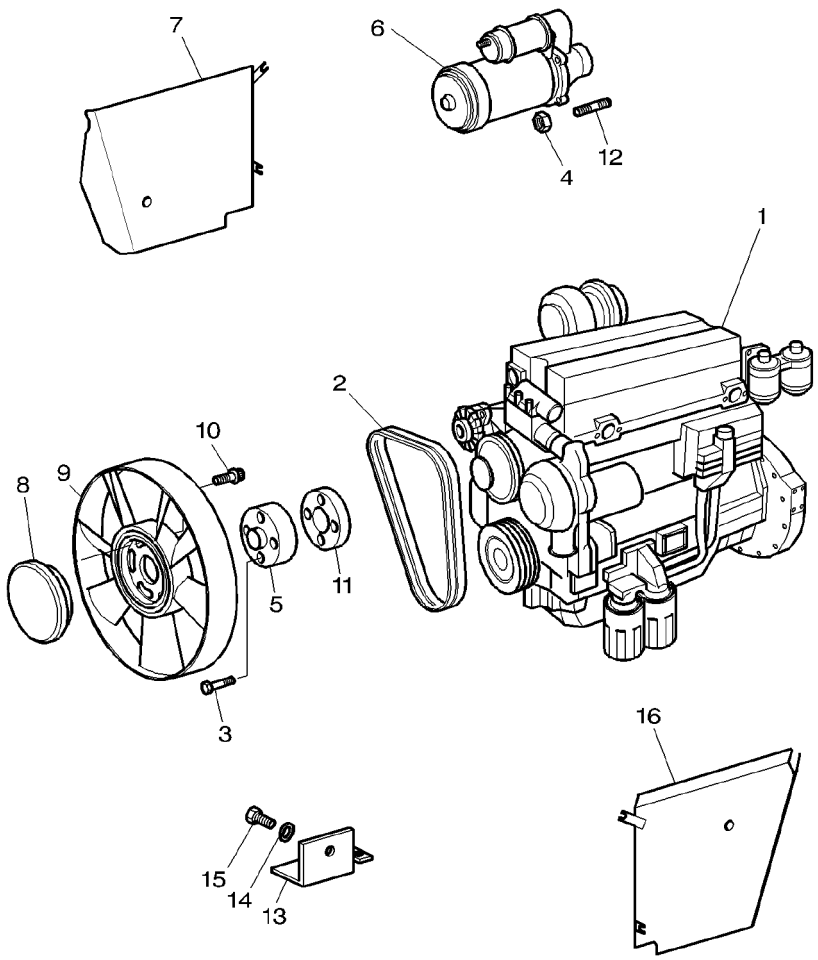

1	3779023M1	PEL. YK31431	**1**	ENGINE	MOTEUR MOTORE	MOTOR MOTOR
1	4222878M91		**1**	SHORT ENGINE	BLOC EMBIELLE MOTORE ALLEGGER.	RUMPFMOTOR BLOQUE EMBIELADO
2	***3617180M91***	◀▶ 1470MM	**1**	KIT, BELT	JEU COURROIES KIT CINGHIA	RIEMENSATZ CORREAS JUEGO
3	3009287X1	M8X40 ➡| H327030	**4**	SCREW METRIC	VIS METRIQUE VITE METRICA	SCHRAUBE METR TORNILLO METRICO
3	3009288X1	M8X50 ➡ H327031	**4**	SCREW METRIC	VIS METRIQUE VITE METRICA	SCHRAUBE METR TORNILLO METRICO
4	3009693X1	M10	**3**	NUT METRIC	ECROU METRIQUE DADO METRICO	MUTTER METRISCH TUERCA METRICO
5	3780201M1	⧗ 27MM ➡| J077023	**1**	SPACER	ENTRETOISE DISTANZIALE	ABSTANDSTUECK PIEZA DISTANCIA
5	3784034M1	⧗ 37MM ➡ J077024	**1**	SPACER	ENTRETOISE DISTANZIALE	ABSTANDSTUECK PIEZA DISTANCIA
6	3581576M3	👁 10−40 No 1	**1**	STARTERMOTOR	DEMARREUR MOTORINO AVVIAM.	ANLASSER MOTOR ARRANQUE
7	3782009M4	▶	**1**	COWL	GARANT CAPPOTTATURA	AUFSATZ CAPERUZA
8	3783350M1	➡| H327030	**1**	CLUTCH	EMBRAYAGE FRIZIONE	SCHALTKUPPLUNG EMBRAGUE
8	3783352M1	➡ H327031	**1**	CLUTCH	EMBRAYAGE FRIZIONE	SCHALTKUPPLUNG EMBRAGUE
9	3781006M1	➡| H327030 ∅ 550MM	**1**	FAN	VENTILATEUR VENTOLA	LUEFTER VENTILADOR
9	3780204M1	➡ H327031 ∅ 600MM	**1**	FAN	VENTILATEUR VENTOLA	LUEFTER VENTILADOR
10	3009920X1	M8X16 ➡| H327030	**4**	PLOUGH BOLT	VIS A EMBASE VITE TESTA TONDA	SENKSCHLOSSSCHRB TORNILLO ALOJ C
10	3009920X1	M8X16 ➡ H327031	**6**	PLOUGH BOLT	VIS A EMBASE VITE TESTA TONDA	SENKSCHLOSSSCHRB TORNILLO ALOJ C
11	3779170M1	➡ H327031 ➡| J077023	**1**	SPACER	ENTRETOISE DISTANZIALE	ABSTANDSTUECK PIEZA DISTANCIA
12	**391005X1**	M10X25	**3**	STUD	GOUJON PRIGIONIERO	STEHBOLZEN ESPARRAGO
13	3779643M2		**1**	STRAP	PATTE CORREGGIA	LASCHE FAJA
14	385361X1		**1**	WASHER METRIC	RONDELLE METR. RONDELLA METRICO	SCHEIBE METRISCH ARANDELA METRICO
15	390246X1	M8X70	**1**	BOLT	BOULON BULLONE	MASCH.SCHRAUBE PERNO
16	3782008M5	◀	**1**	COWL	GARANT CAPPOTTATURA	AUFSATZ CAPERUZA

Alternator And Bracket
Alternateur Et Support
Drehstromlichtmaschine Und Support
Alternatore Cone Soporte
Alternador Y Support

10-20

1-ZA10-007-A

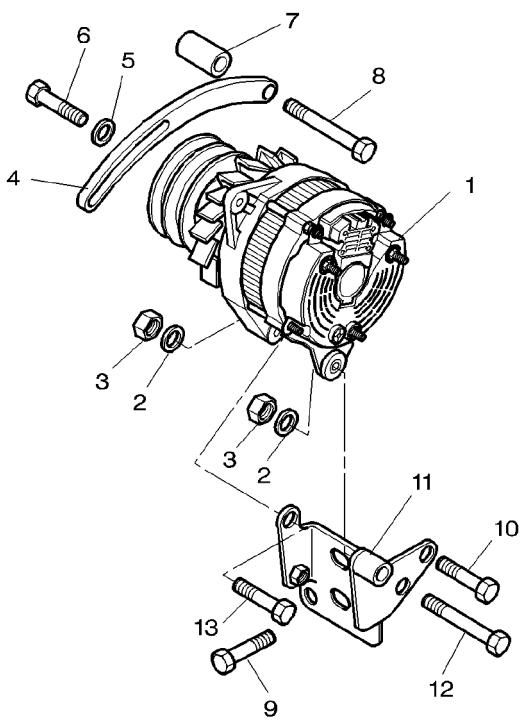

1	3714944M1	70 AMP. ZC401001 1	**1**	ALTERNATOR	ALTERNATEUR ALTERNATORE	LICHTM.DREHSTROM ALTERNADOR
2	390734X1		**3**	WASHER METRIC	RONDELLE METR. RONDELLA METRICO	SCHEIBE METRISCH ARANDELA METRICO
3	339169X1		**2**	NUT METRIC	ECROU METRIQUE DADO METRICO	MUTTER METRISCH TUERCA METRICO
4	3782559M1		**1**	TENSIONER	TENDEUR TENDITORE	SPANNER TENSOR
5	385361X1		**1**	WASHER METRIC	RONDELLE METR. RONDELLA METRICO	SCHEIBE METRISCH ARANDELA METRICO
6	339761X1	M8X25	**1**	SCREW METRIC	VIS METRIQUE VITE METRICA	SCHRAUBE METR TORNILLO METRICO
7	3779375M1		**1**	SPACER	ENTRETOISE DISTANZIALE	ABSTANDSTUECK PIEZA DISTANCIA
8	339269X1	M10X100	**1**	BOLT METRIC	BOULON METRIQUE BULLONE METRICO	MASCH.SCHRB MET PERNO METRICO
9	3009492X1	M10X25	**2**	SCREW METRIC	VIS METRIQUE VITE METRICA	SCHRAUBE METR TORNILLO METRICO
10	3009505X1	M12X25	**2**	SCREW METRIC	VIS METRIQUE VITE METRICA	SCHRAUBE METR TORNILLO METRICO
11	3783700M1		**1**	SUPPORT	SUPPORT SUPPORTO	LAGERUNG DISPOS.DE SOSTEN
12	339291X1	M8X55	**1**	BOLT METRIC	BOULON METRIQUE BULLONE METRICO	MASCH.SCHRB MET PERNO METRICO
13	339010X1	M8X40	**1**	BOLT METRIC	BOULON METRIQUE BULLONE METRICO	MASCH.SCHRB MET PERNO METRICO

Alternator And Bracket
Alternateur Et Support
Drehstromlichtmaschine Und Support
Alternatore Cone Soporte
Alternador Y Support

10-25

1-ZA10-002-B

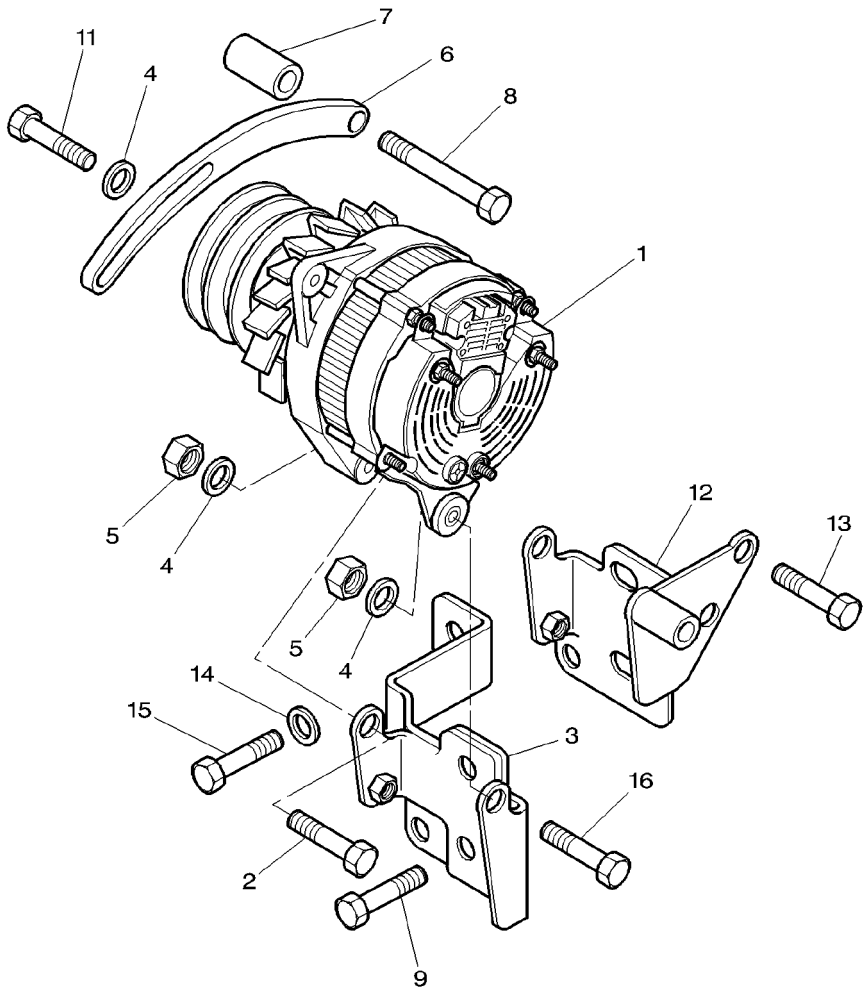

1	3780634M1	120 AMP. 👁 10−35 No 1	**1**	ALTERNATOR	ALTERNATEUR ALTERNATORE	LICHTM.DREHSTROM ALTERNADOR
2	3009494X1	M10X35	**1**	SCREW METRIC	VIS METRIQUE VITE METRICA	SCHRAUBE METR TORNILLO METRICO
3	3780560M2	➡| J014023	**1**	SUPPORT	SUPPORT SUPPORTO	LAGERUNG DISPOS.DE SOSTEN
4	390734X1		**3**	WASHER METRIC	RONDELLE METR. RONDELLA METRICO	SCHEIBE METRISCH ARANDELA METRICO
5	3009693X1		**2**	NUT METRIC	ECROU METRIQUE DADO METRICO	MUTTER METRISCH TUERCA METRICO
6	3782607M1		**1**	TENSIONER	TENDEUR TENDITORE	SPANNER TENSOR
7	3779375M1	◀▶ 70MM	**1**	SPACER	ENTRETOISE DISTANZIALE	ABSTANDSTUECK PIEZA DISTANCIA
8	339269X1	M10X100	**1**	BOLT METRIC	BOULON METRIQUE BULLONE METRICO	MASCH.SCHRB MET PERNO METRICO
9	3009492X1	M10X25	**2**	SCREW METRIC	VIS METRIQUE VITE METRICA	SCHRAUBE METR TORNILLO METRICO
10	390734X1		**1**	WASHER METRIC	RONDELLE METR. RONDELLA METRICO	SCHEIBE METRISCH ARANDELA METRICO
11	3009495X1	M10X40	**1**	BOLT METRIC	BOULON METRIQUE BULLONE METRICO	MASCH.SCHRB MET PERNO METRICO
12	3783702M1	➡ J014024	**1**	SUPPORT	SUPPORT SUPPORTO	LAGERUNG DISPOS.DE SOSTEN
13	1440716X1	➡ J014024 M12X30	**2**	BOLT METRIC	BOULON METRIQUE BULLONE METRICO	MASCH.SCHRB MET PERNO METRICO
14	390734X1	➡| J014023	**1**	WASHER METRIC	RONDELLE METR. RONDELLA METRICO	SCHEIBE METRISCH ARANDELA METRICO
15	3009492X1	➡| J014023	**1**	SCREW METRIC	VIS METRIQUE VITE METRICA	SCHRAUBE METR TORNILLO METRICO
16	3009494X1	➡| J014023 M10X35	**1**	SCREW METRIC	VIS METRIQUE VITE METRICA	SCHRAUBE METR TORNILLO METRICO
16	3009501X1	➡ J014024 M10X70	**1**	BOLT	BOULON BULLONE	MASCH.SCHRAUBE PERNO

1-ZC40-001-A

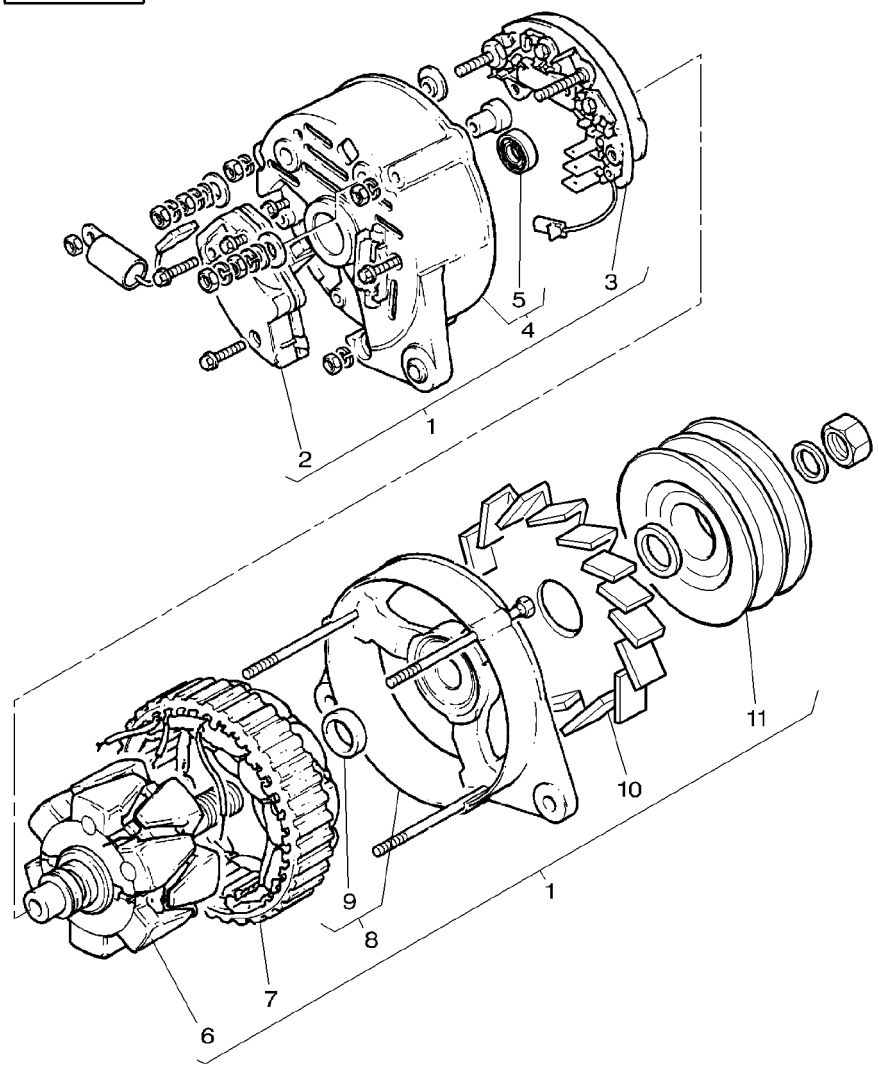

1	3714944M1	70 AMP		**1**	ALTERNATOR	ALTERNATEUR ALTERNATORE	LICHTM.DREHSTROM ALTERNADOR
2	3900691M91	1		**1**	REGULATOR	REGULATEUR REGOLATORE	REGLER REGULADOR
3	3477529M91	1		**1**	RECTIFIER	REDRESSEUR RADDRIZZATORE	GLEICHRICHTER RECTIFICADOR
4	3902778M1	1		**1**	BRACKET	SUPPORT FIXATION SUPPORTO FISSAGG	HALTEARM SOPORTE
5	3477859M1	4		**1**	BEARING ASSY	ROULEMENT CUSCINETTO COMPL	RADIALLAGER RODAMIENTO RAD
6	3476715M91	1		**1**	ROTOR	ROTOR ROTORE	ROTOR ROTOR
7	3478386M1	1		**1**	STATOR	STATOR STATORE	STATOR ESTATOR
8		1	REF .1	**1**	SUPPORT	SUPPORT SUPPORTO	LAGERUNG DISPOS.DE SOSTEN
9		8	REF .1	**1**	BEARING ASSY	ROULEMENT CUSCINETTO COMPL	RADIALLAGER RODAMIENTO RAD
10	1897696M1	1		**1**	FAN	VENTILATEUR VENTOLA	LUEFTER VENTILADOR
11	3902432M1	1		**1**	PULLEY	POULIE PULEGGIA	RIEMENSCHEIBE POLEA

Alternator	**Valeo**
Alternateur	**Valeo**
Drehstromlichtmaschine	**Valeo**
Alternatore	**Valeo**
Alternador	**Valeo**

10-35

1-ZC34-001-A

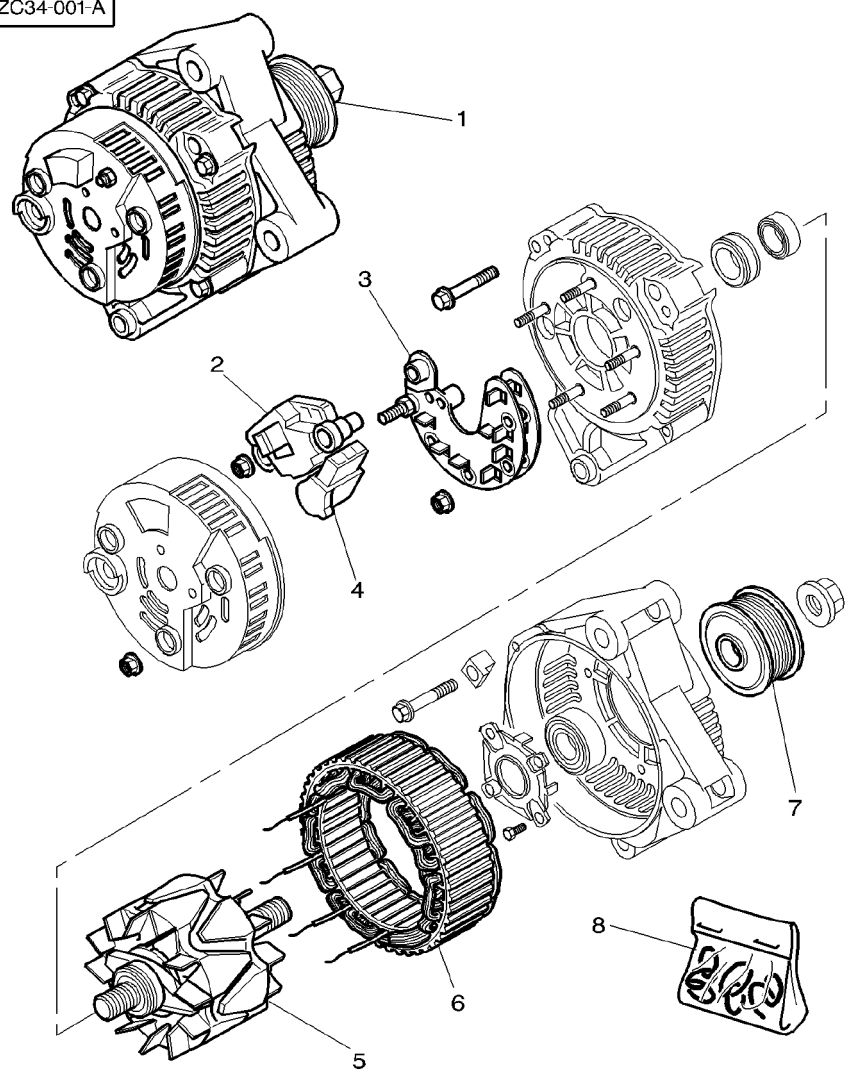

1	3780634M1	120 AMP	**1**	ALTERNATOR	ALTERNATEUR ALTERNATORE	LICHTM.DREHSTROM ALTERNADOR
2	3903324M91	1	**1**	SUPPORT	SUPPORT SUPPORTO	LAGERUNG DISPOS.DE SOSTEN
3	3903321M91	1	**1**	BRIDGE	PONT PONTE	BRUECKE PUENTE
4	3903318M91	1	**1**	REGULATOR	REGULATEUR REGOLATORE	REGLER REGULADOR
5	3903319M91	1	**1**	ROTOR	ROTOR ROTORE	ROTOR ROTOR
6	3903320M91	1	**1**	STATOR	STATOR STATORE	STATOR ESTATOR
7	3903322M1	1	**1**	PULLEY	POULIE PULEGGIA	RIEMENSCHEIBE POLEA
8	3903323M91		**1**	PARTS PACK	JEU PIECES PACCO RICAMBI	SATZ TEILE PAQUETE PIEZAS

Starter	**Magneti Marelli**
Demarreur	**Magneti Marelli**
Anlasser	**Magneti Marelli**
Motorino Di Avviamento	**Magneti Marelli**
Arranque	**Magneti Marelli**

10-40

1-ZC50-002-B

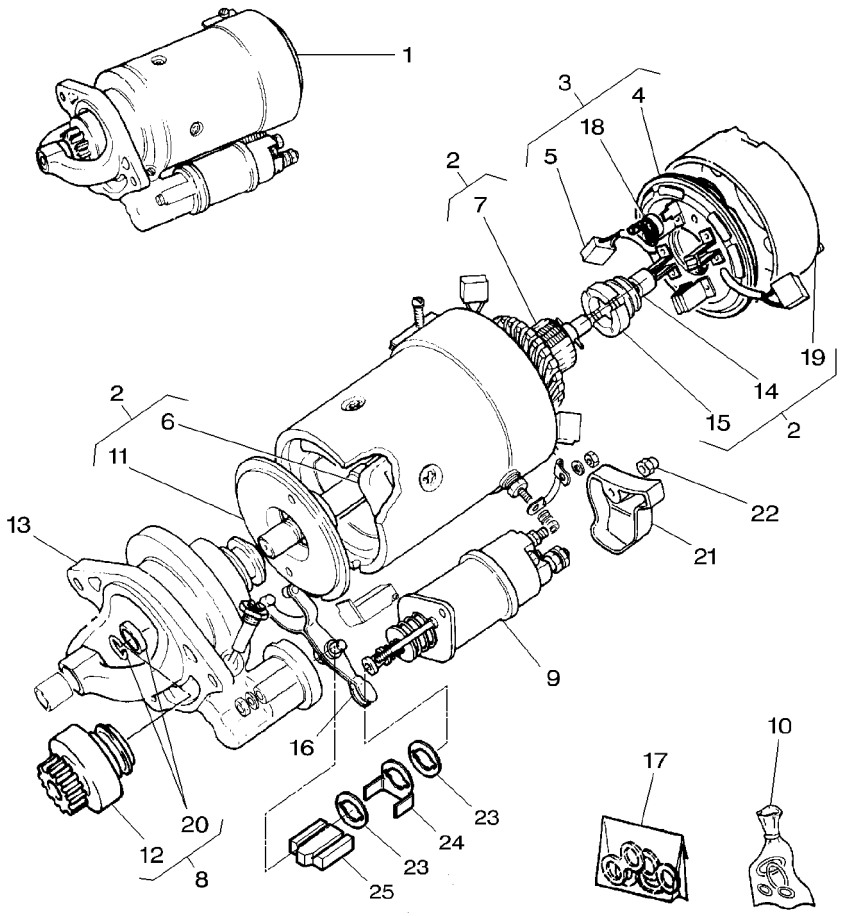

1	3581576M3	[A] M127/2.8		**1**	STARTERMOTOR	DEMARREUR MOTORINO AVVIAM.	ANLASSER MOTOR ARRANQUE
2	3902392M91	1		**1**	PARTS PACK	JEU PIECES PACCO RICAMBI	SATZ TEILE PAQUETE PIEZAS
3	3902391M91	1		**1**	PARTS PACK	JEU PIECES PACCO RICAMBI	SATZ TEILE PAQUETE PIEZAS
4		3	REF NO 3	**1**	KIT, SPRING	JEU RESSORTS KIT MOLLA	FEDERNSATZ MUELLES JUEGO
5		3	REF NO 3	**1**	KIT, BRUSH	JEU BALAI KIT SPAZZOLA	BUERSTENSATZ ESCOBILLAS JUEGO
6		2	REF NO 2	**1**	COIL	BOBINE BOBINA	KNICKSCHUTZFEDER BOBINA
7		2	REF NO 2	**1**	ARMATURE	INDUIT ARMATURA	INDUKTIONSANKER INDUCIDO
8	3902390M91	1		**1**	PARTS PACK	JEU PIECES PACCO RICAMBI	SATZ TEILE PAQUETE PIEZAS
9	3901191M1	1		**1**	SOLENOID	SOLENOIDE SOLENOIDE	MAGNETSPULE SOLENOIDE
10	1887967M91	1		**1**	KIT	JEU KIT	SATZ JUEGO
11		2	REF NO 2	**1**	BEARING PLATE	PLAQUE ROULEMENT PIASTRA CUSCINET	LAGERPLATTE PLACA DE APOYO
12		8	REF NO 8	**1**	DRIVE	COMMANDE PRESA DI MOTO	ANTRIEB TRASMISION
13	3901195M91	1	H174010	**1**	BRACKET	SUPPORT FIXATION SUPPORTO FISSAGG	HALTEARM SOPORTE
13	3904181M91	1	H174011	**1**	BRACKET	SUPPORT FIXATION SUPPORTO FISSAGG	HALTEARM SOPORTE
14		2	REF NO 2	**1**	BUSH	BAGUE BOCCOLA	BUCHSE CASQUILLO
15		2	REF NO 2	**1**	KIT, BRAKE	JEU FREIN KIT FRENO	BREMSENSATZ FRENOS JUEGO
16	1897317M92	1		**1**	KIT, LEVER	JEU LEVIER KIT LEVETTA	SATZ HEBEL JUEGO, PALANCA
17	1806002M1	1		**1**	KIT, SEAL	JEU ETANCHEITE KIT TENUTA	DICHTRINGSATZ RETENES JUEGO
18		3	REF NO 3	**1**	KIT, BRUSH PLATE	JEU PLAQUE BALAI KIT SPAZZOLA.	SATZ BUERSTENPL JGO.PLACA ESCOB.
19		2	REF NO 2	**1**	HOUSING	CARTER CARCASSA	GEHAEUSE ALOJAMIENTO
20		8	REF NO 8	**1**	KIT, RETAINER	JEU RETENEUR KIT SOSTEGNO	HALTERINGSATZ JUEGO RETENEDOR
21	3611662M1			**1**	COVER	COUVERCLE COPERCHIO	DECKEL CUBIERTA
22	3611638M1			**1**	NUT	ECROU DADO	MUTTER TUERCA
23	3904186M1	1	H174011	**2**	GASKET	JOINT GUARNIZIONE	DICHTSCHEIBE EMPAQUETADURA.
24	3904185M1	1	H174011	**1**	CARRIER	PORTE SATELLITES SUPPORTO SATELL.	TRAEGER PORTADOR
25	3904184M1	1	H174011	**1**	GROMMET	PASSE FIL GOMMINO	GUMMITUELLE PASACABLE

Starter	**Magneti Marelli**
Demarreur	**Magneti Marelli**
Anlasser	**Magneti Marelli**
Motorino Di Avviamento	**Magneti Marelli**
Arranque	**Magneti Marelli**

1-ZC50-002-B

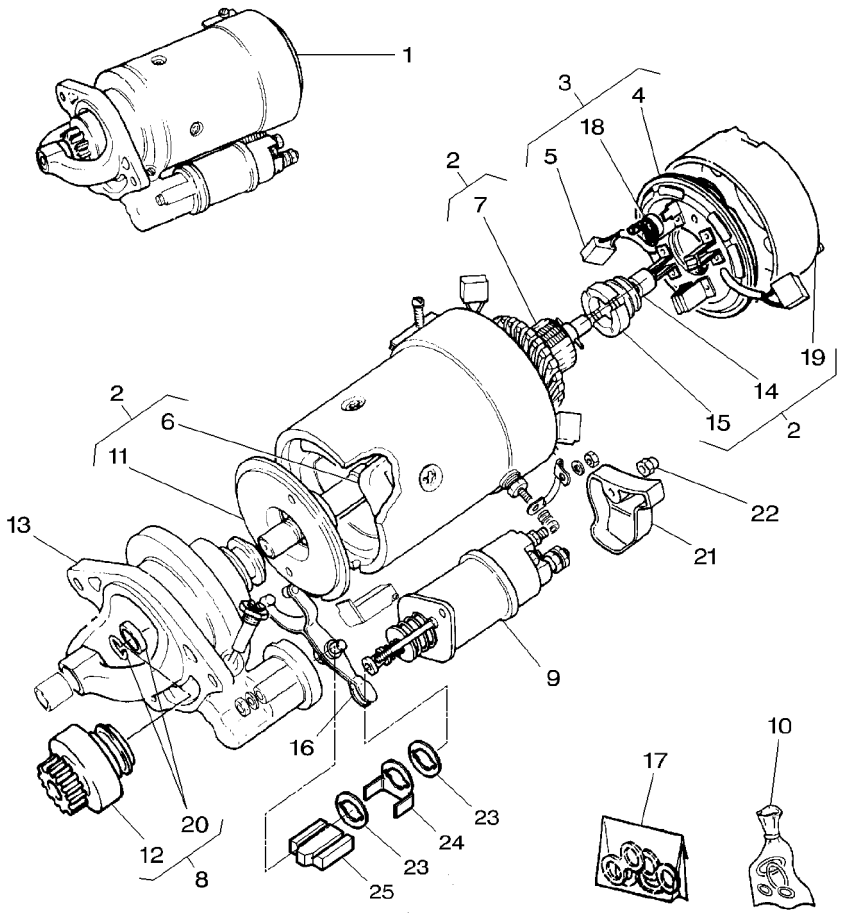

[A] THE APPROPRIATE SAFETY DECALS MUST BE ORDERED AND FITTED TO THIS PART
CETTE PIECE DOIT ETRE IMPERATIVEMENT COMMANDEE AVEC SA DECALCOMANIE DE SECURITE
DIESES TEIL MUSS UNBEDINGT ZUSAMMEN MIT DEM SICHER HEITSHINWEISSCHILD BESTELLT WERDEN
QUESTO PEZZO DEVE ASSOLUTAMENTE ESSERE ORDINATO CON LA RELATIVA DECALCO. SULLA SICUREZZA
ESTA PIEZA SE TIENE QUE PEDIR IMPERATIVAMENTE CON SU CALCOMANIA DE SEGURIDAD

1-ZH17-004-B

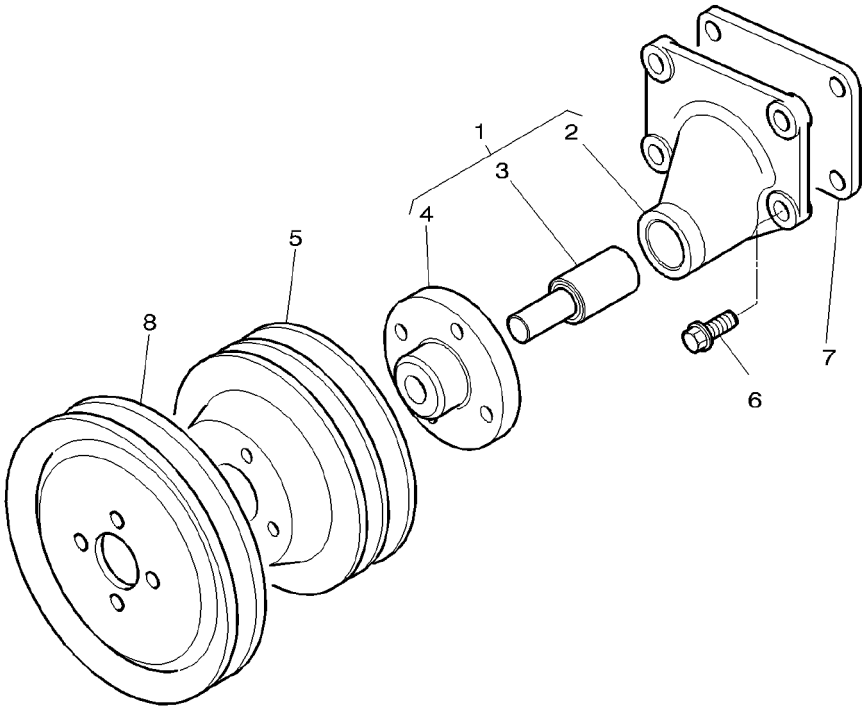

1	4222016M91		**1**	FANDRIVE HOUSING	CARTER CDE VENTI CORP COM VENTOLA	LUEFTERBOCK-GEH. CARTER VENTILAD.
2		1 REF NO 1	**1**	HOUSING	CARTER CARCASSA	GEHAEUSE ALOJAMIENTO
3		1 REF NO 1	**1**	BEARING ASSY	ROULEMENT CUSCINETTO COMPL	RADIALLAGER RODAMIENTO RAD
4		1 REF NO 1	**1**	HUB	MOYEU MOZZO	NABE CUBO
5	4222301M1		**1**	PULLEY	POULIE PULEGGIA	RIEMENSCHEIBE POLEA
6	3638592M1		**4**	SCREW	VIS VITE	SCHRAUBE TORNILLO
7	4222197M1		**1**	PLATE	PLAQUE PIASTRA	PLATTE PLATO
8	3808727M1		**1**	PULLEY	POULIE PULEGGIA	RIEMENSCHEIBE POLEA

1-ZH01-002-A

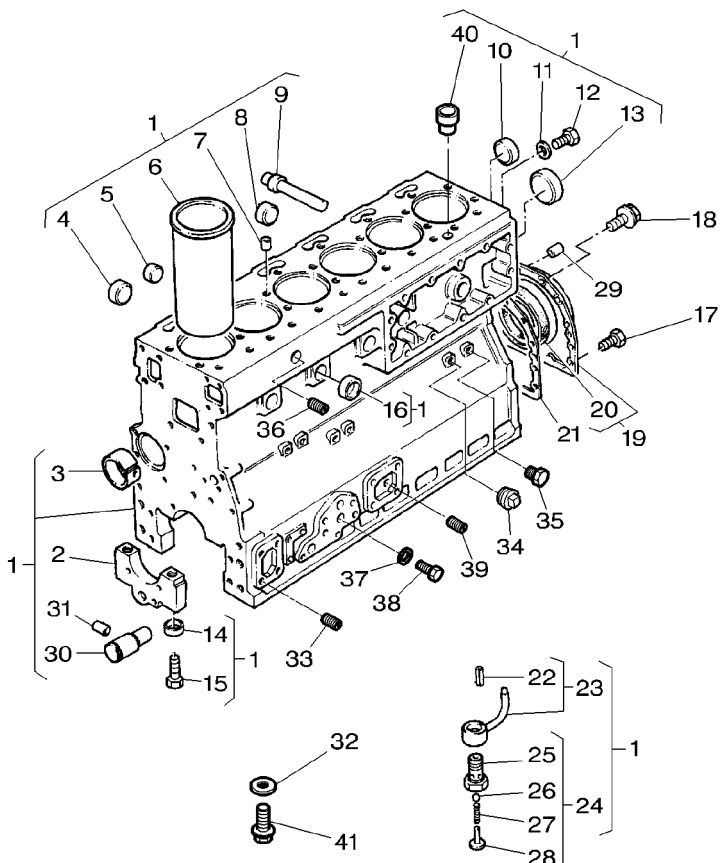

1	4222497M91		1	KIT,CYL.BLOCK	JEU BLOC CYLINDR KIT,MONOBLOCCO	ZYL.BLOCKSATZ JGO.BLOQUE CIL.
2		1 ▶ REF . 1	7	CAP	CHAPEAU CAPPELLO	KAPPE TAPA
3	4222017M1	1	1	BUSH	BAGUE BOCCOLA	BUCHSE CASQUILLO
4	731354M1	1 [D]	3	PLUG	BOUCHON TAPPO	VERSCHL.STOPFEN TAPON
5	746259M1	1 [D]	3	PLUG	BOUCHON TAPPO	VERSCHL.STOPFEN TAPON
6	4222128M1	[B]	6	LINER	CHEMISE CAMICIA	LAUFBUCHSE CAMISA
6	4222129M1	1 [A]	6	LINER	CHEMISE CAMICIA	LAUFBUCHSE CAMISA
7	736868M1	1 [G]	1	PLUG	BOUCHON TAPPO	VERSCHL.STOPFEN TAPON
8	4222012M1	1 [E]	5	PLUG	BOUCHON TAPPO	VERSCHL.STOPFEN TAPON
9	1476282X1	1 [F]	1	PLUG	BOUCHON TAPPO	VERSCHL.STOPFEN TAPON
10	746259M1	1 [H]	1	PLUG	BOUCHON TAPPO	VERSCHL.STOPFEN TAPON
11	3638664M1	1	1	WASHER	RONDELLE RONDELLA	UNTERLEGSCHEIBE ARANDELA
12	376180X1	1 [I]	1	PLUG	BOUCHON TAPPO	VERSCHL.STOPFEN TAPON
13	4222043M1	1 [J]	1	PLUG	BOUCHON TAPPO	VERSCHL.STOPFEN TAPON
14	733072M1	1	14	RING	ANNEAU ANELLO	RING ARO
15	1476108X1	1	14	SCREW	VIS VITE	SCHRAUBE TORNILLO
16	746259M1	1 [C]	5	PLUG	BOUCHON TAPPO	VERSCHL.STOPFEN TAPON
17	3641756M1		2	SCREW	VIS VITE	SCHRAUBE TORNILLO
18	3637008M1		12	SCREW	VIS VITE	SCHRAUBE TORNILLO
19	3640868M91		1	HOUSING	CARTER CARCASSA	GEHAEUSE ALOJAMIENTO
20	1447691M1	19	1	SEAL	JOINT ETANCHEITE PARAOLIO	DICHTRING RETEN
21	4223587M1		1	JOINT	JOINT PLAT GIUNTO	DICHTUNG JUNTA
22	4222512M1	23	1	DOWEL	PLOT SPINA	ZYLINDERSTIFT CENTRAJE
23	4224385M91	1	6	JET	GICLEUR GETTO	SPRITZDUESE SURTIDOR
24	3637005M91	1	6	VALVE	SOUPAPE VALVOLA	VENTIL VALVULA
25		24 ▶ REF. 24	1	BODY	CORPS CORPO	KOERPER CUERPO

1-ZH01-002-A

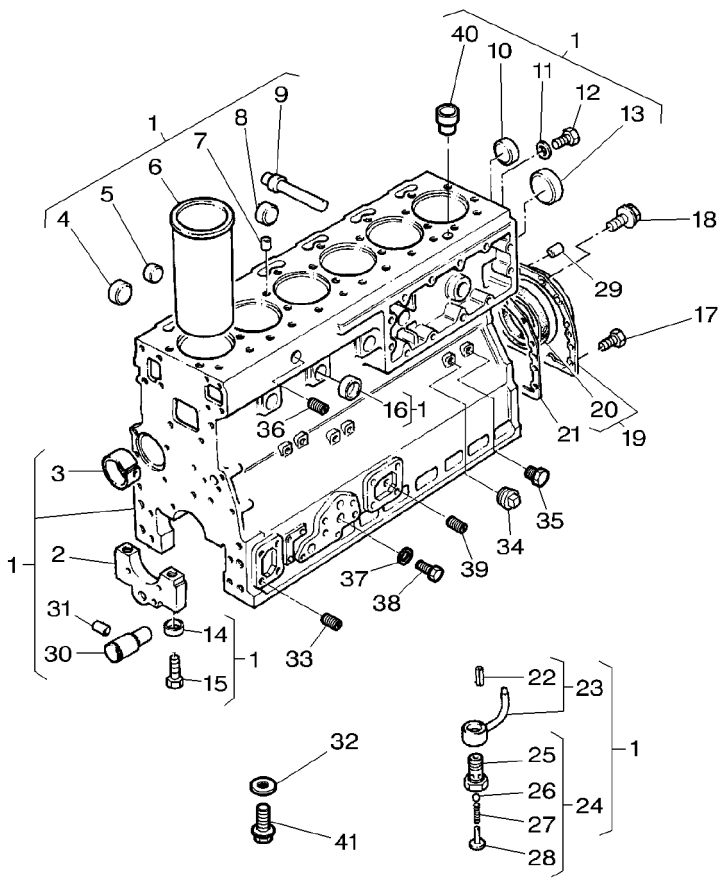

26	3637006M1	24	**1**	BALL	BILLE SFERA	KUGEL BOLA
27	748149M1	24	**1**	SPRING	RESSORT MOLLA	FEDER MUELLE
28	3637007M1	24	**1**	RETAINER	RETENEUR FERMO	HALTERING RETENEDOR
29	731947M1		**2**	DOWEL	PLOT SPINA	ZYLINDERSTIFT CENTRAJE
30	3641847M1	1	**1**	SHAFT	ARBRE ALBERO	WELLE ARBOL
31	3638414M1		**1**	PIN	GOUPILLE PERNO	BOLZEN PASADOR
32	376616X1	1	**6**	BUSH	BAGUE BOCCOLA	BUCHSE CASQUILLO
33	748393M1		**4**	PLUG	BOUCHON TAPPO	VERSCHL.STOPFEN TAPON
34	731996M1		**2**	PLUG	BOUCHON TAPPO	VERSCHL.STOPFEN TAPON
35	376670X1		**2**	PLUG	BOUCHON TAPPO	VERSCHL.STOPFEN TAPON
36	376606X1		**1**	PLUG	BOUCHON TAPPO	VERSCHL.STOPFEN TAPON
37	1650388M1		**1**	WASHER	RONDELLE RONDELLA	UNTERLEGSCHEIBE ARANDELA
38	3638809M1		**1**	SCREW	VIS VITE	SCHRAUBE TORNILLO
39	1476192X1		**1**	PLUG	BOUCHON TAPPO	VERSCHL.STOPFEN TAPON
40	4222439M1	1	**2**	DOWEL	PLOT SPINA	ZYLINDERSTIFT CENTRAJE
41	348281X1	1	**6**	SCREW	VIS VITE	SCHRAUBE TORNILLO

[A] UNFINISHED − PRESS FIT
A REALESER − MONTAGE A LA PRESSE
ZU BOHREN − PRESSITZ
A ALESARE − MONTAGGIO PRESSA
A ESCARIAR − MONTAJE A PRENSA

[B] FINISHED − SLIP FIT
FINI − MONTAGE GLISSANT
ZU ENDE − GLEITSITZ
FINIOT − MONTAGGIO CINGHIE
ACABADO − MONTAJE DESLIZANTE

[C] WATER JACKET , LEFT HAND SIDE
CHEMISE A EAU , COTE GAUCHE
KUEHLWASSERKANAL , LINKS
INTERCAPEDINE PER ACQUA , LATO SINISTRO
GALERIA AGUA , LADO IZQUIERRDO

1-ZH01-002-A

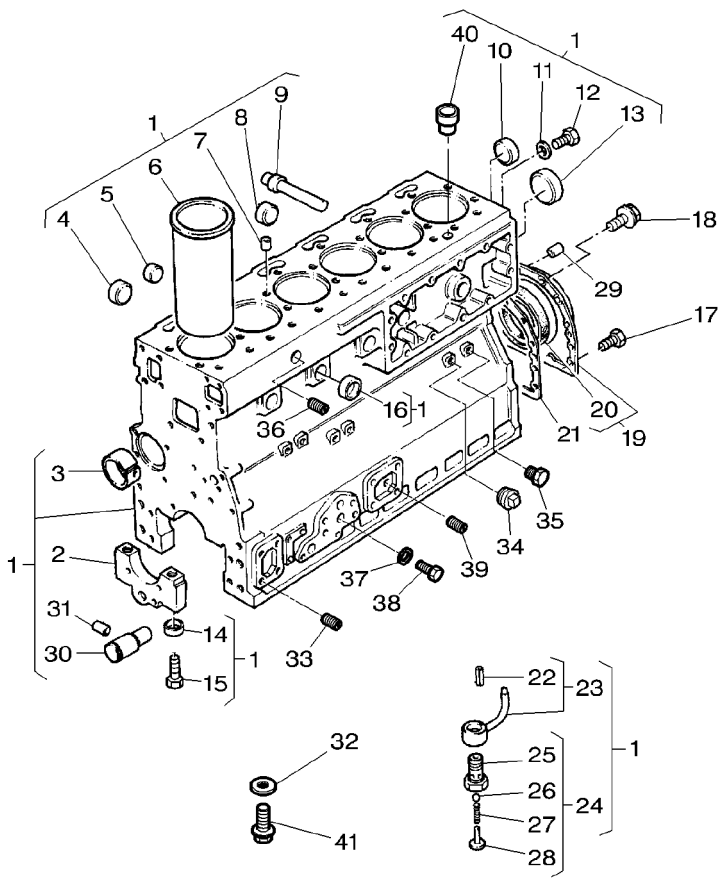

[D] WATER JACKET , RIGHT HAND SIDE
CHEMISE A EAU , COTE DROIT
KUEHLWASSERKANAL , RECHTS
INTERCAPEDINE PER ACQUA , LATO DESTRO
GALERIA AGUA , LADO DERECHO

[E] TAPPET CHAMBER
CHAMBRE DES CULBUTEURS
STOESSELKAMMER
CAMERA DELLA PUNTERIA
TAPETA CAMARA

[F] ROCKER OIL FEED DRILLING, RIGHT HAND SIDE
PERCAGE D'ALIMENTATION HUILE CULBUTEUR COTE DROIT
KIPPHEBEL−OELKANAL, RECHTS
FORATURA DI AFFLUSSO OLIO AL BILANCIERE LATO DESTR O
ALIMENTACION TAPA BALANCINES , LADO DERECHO

[G] ROCKER OIL FEED DRILLING, TOP FACE
PERCAGE D'ALIMENTATION HUILE CULBUTEUR FACE SUPER IEUR
KIPPHEBEL−OELKANAL, OBEN
FORATURA DI AFFLUSSO OLIO AL BILANCIERE FACCIA SUP ERIORE
ALIMENTACION TAPA BALANCINES , PARTE SUPERIOR

[H] WATER JACKET , REAR FACE
CHEMISE A EAU , FACE ARRIERE
KUEHLWASSERKANAL , HINTEN
INTERCAPEDINE PER ACQUA FACCIA POSTERIORE
GALERIA AGUA, PARTE TRASERA

[I] LUBRICATING OIL PRESSURE RAIL , REAR END
RAIL DE LUBRIFICATION PRESSION D'HUILE ARRIERE
OELDRUCKKANAL , HINTEN
CONDOTTO OLIO LUBRIFICANTE SOTTO PRESSIONE , ESTRE MITA POSTERIORE
GALERIA DE PRESION , PARTE TRASERA

[J] CAMSHAFT CHAMBER, REAR END
CHAMBRE D'ARBRE A CAME, ARRIERE
NOCKENWELLENKAMMER , HINTEN
VANO ALBERO A CAMME , ESTREMITA POSTERIORE
ALOJAMIENTO EJE DE LEVAS , PARTE TRASERA

1-ZH02-002-A

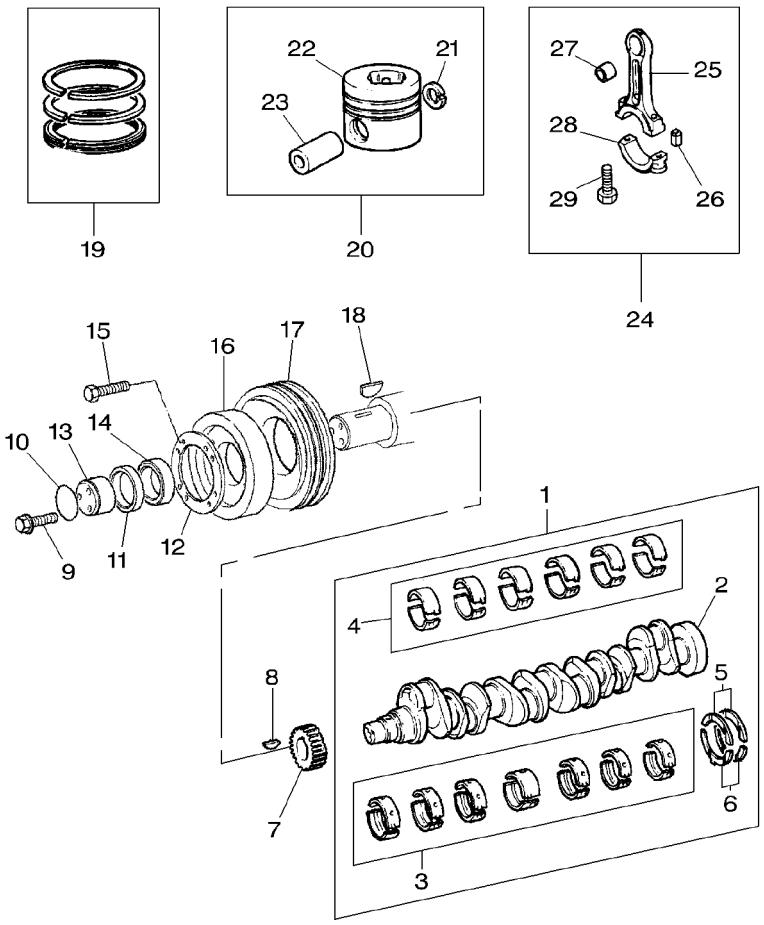

1	4222279M91			
1	3637019M91			
2		1	REF.1	
3	3637020M91	1	[A]	
3	3637021M91		[A]	(−)0.25MM
3	3637022M91		[A]	(−)0.50MM
3	3637023M91		[A]	(−)0.75MM
4	3637024M91	1	[A]	
4	3637025M91		[A]	(−)0.25MM
4	3637026M91		[A]	(−)0.50MM
4	3637027M91		[A]	(−)0.75MM
5	747128M1	1		
5	735742M1			(+)0.19MM
6	747129M1	1		
6	735743M1			(+)0.19MM
7	748201M1			
8	2196X			
9	748074M1			
10	1447207M1			
11	1447128M1			
12	3638589M1			
13	742536M1			
14	748315M1			
15	3638590M1			
16	1476037M1			
17	3638588M1			

1	KIT, CRANKSHAFT	JEU VILEBREQUIN KIT ALBEROGOMITI	KURBELWELLENSATZ CIGUENAL JUEGO
1	KIT, CRANKSHAFT	JEU VILEBREQUIN KIT ALBEROGOMITI	KURBELWELLENSATZ CIGUENAL JUEGO
1	CRANKSHAFT	VILEBREQUIN ALBERO A GOMITI	KURBELWELLE CIGUENAL
1	KIT, BEARING	JEU COUSSINETS KIT CUSCINETTO	LAGERSATZ JUEGO COJINETES
X	KIT, BEARING	JEU COUSSINETS KIT CUSCINETTO	LAGERSATZ JUEGO COJINETES
X	KIT, BEARING	JEU COUSSINETS KIT CUSCINETTO	LAGERSATZ JUEGO COJINETES
X	KIT, BEARING	JEU COUSSINETS KIT CUSCINETTO	LAGERSATZ JUEGO COJINETES
1	KIT, BEARING	JEU COUSSINETS KIT CUSCINETTO	LAGERSATZ JUEGO COJINETES
X	KIT, BEARING	JEU COUSSINETS KIT CUSCINETTO	LAGERSATZ JUEGO COJINETES
X	KIT, BEARING	JEU COUSSINETS KIT CUSCINETTO	LAGERSATZ JUEGO COJINETES
X	KIT, BEARING	JEU COUSSINETS KIT CUSCINETTO	LAGERSATZ JUEGO COJINETES
2	THRUST WASHER	RONDELLE BUTEE RONDELLA REGGISP	ANLAUFSCHEIBE ARANDELA ACELER
X	WASHER	RONDELLE RONDELLA	UNTERLEGSCHEIBE ARANDELA
2	THRUST WASHER	RONDELLE BUTEE RONDELLA REGGISP	ANLAUFSCHEIBE ARANDELA ACELER
X	WASHER	RONDELLE RONDELLA	UNTERLEGSCHEIBE ARANDELA
1	GEAR	ENGRENAGE INGRANAGGIO	ZAHNRAD ENGRANAJE
1	KEY	CLAVETTE CHIAVETTA	PASSKEIL CLAVE
3	SCREW	VIS VITE	SCHRAUBE TORNILLO
1	O RING	JOINT TORIQUE ANELLO OR	O−RING JUNTA TORICA
1	SPACER	ENTRETOISE DISTANZIALE	ABSTANDSTUECK PIEZA DISTANCIA
1	PLATE	PLAQUE PIASTRA	PLATTE PLATO
1	THRUST PLATE	PLAQUE DE BUTEE PIATTO DI SPINTA	DRUCKPLATTE PLATO ACELERADOR
1	SPACER	ENTRETOISE DISTANZIALE	ABSTANDSTUECK PIEZA DISTANCIA
6	SCREW	VIS VITE	SCHRAUBE TORNILLO
1	DAMPER	DAMPER S POULIE AMMORTIZZATORE	DAEMPFER VALV.REGULADORA
1	PULLEY	POULIE PULEGGIA	RIEMENSCHEIBE POLEA

1-ZH02-002-A

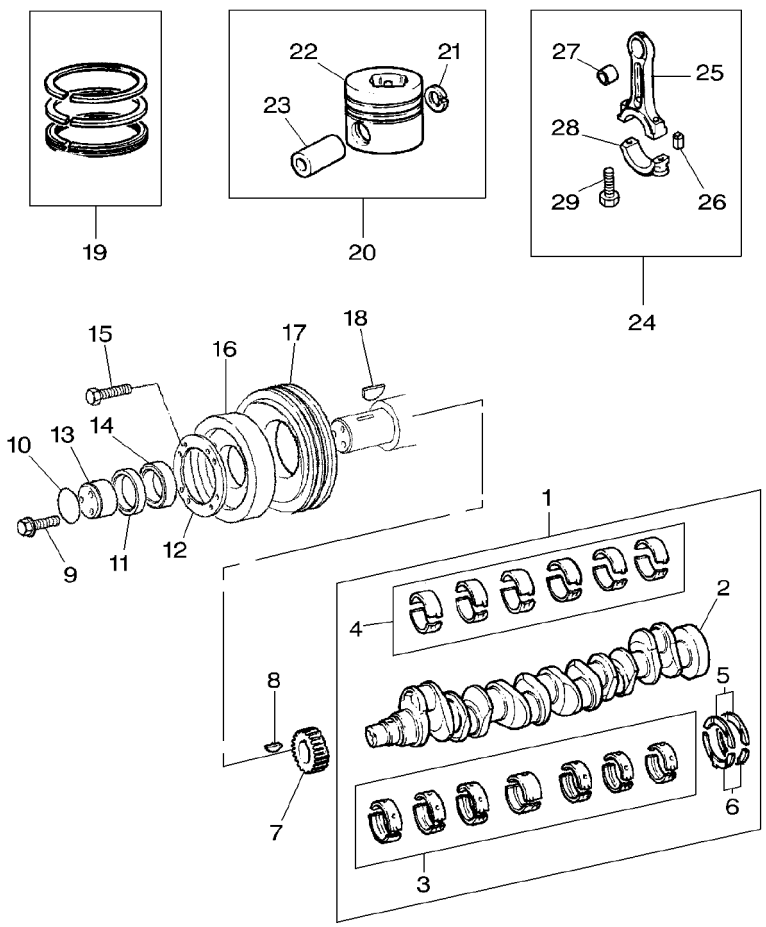

18	11940X		
19	4222136M91		
20	4222134M91		HIGH GRADE
21	4222135M1	20	
22		20	REF. 20
23		20	REF. 20
24	4223432M91		HIGH GRADE WHITE "H"
24	4223433M91		INT GRADE GREEN "J"
24	4223434M91		INT GRADE PURPLE "K"
24	4223435M91		LOW GRADE BLUE "L"
25		24	REF. 24
26	4222133M1	24	
27	4222131M1	24	
28		24	REF. 24
29	4222132M1	24	

[A] PRE−FINISHED
PRE−FINIS
FERTIG BEARBEITET
FINITO
PRE−ACABADO

1	WOODRUFF KEY	CLAVETTE WOODRUF CHIAVETTA WOODR.	SCHEIBENFEDER CHAVETA
6	KIT, PISTON RING	JEU SEGM PISTON KIT FASCIE ELAST	KOLBENRINGSATZ AROS.PIST.JUEGO
6	KIT, PISTON	JEU PISTON KIT PISTONE	KOLBENSATZ JUEGO DE PISTON
2	CIRCLIP	SEGMENT D ARRET ANELLO D'ARRESTO	SICHERUNGSRING CIRCULITO
1	PISTON	PISTON PISTONE	KOLBEN PISTON
1	PIN	GOUPILLE PERNO	BOLZEN PASADOR
6	KIT, CONROD	JEU BIELLE KIT BIELLA	PLEUELST.SATZ JUEGO DE BIELA
6	KIT, CONROD	JEU BIELLE KIT BIELLA	PLEUELST.SATZ JUEGO DE BIELA
6	KIT, CONROD	JEU BIELLE KIT BIELLA	PLEUELST.SATZ JUEGO DE BIELA
6	KIT, CONROD	JEU BIELLE KIT BIELLA	PLEUELST.SATZ JUEGO DE BIELA
1	ROD	TRINGLE ASTA	STANGE VARILLA
2	DOWEL	PLOT SPINA	ZYLINDERSTIFT CENTRAJE
1	BUSH	BAGUE BOCCOLA	BUCHSE CASQUILLO
1	CAP	CHAPEAU CAPPELLO	KAPPE TAPA
2	SCREW	VIS VITE	SCHRAUBE TORNILLO

1-ZH03-002-A

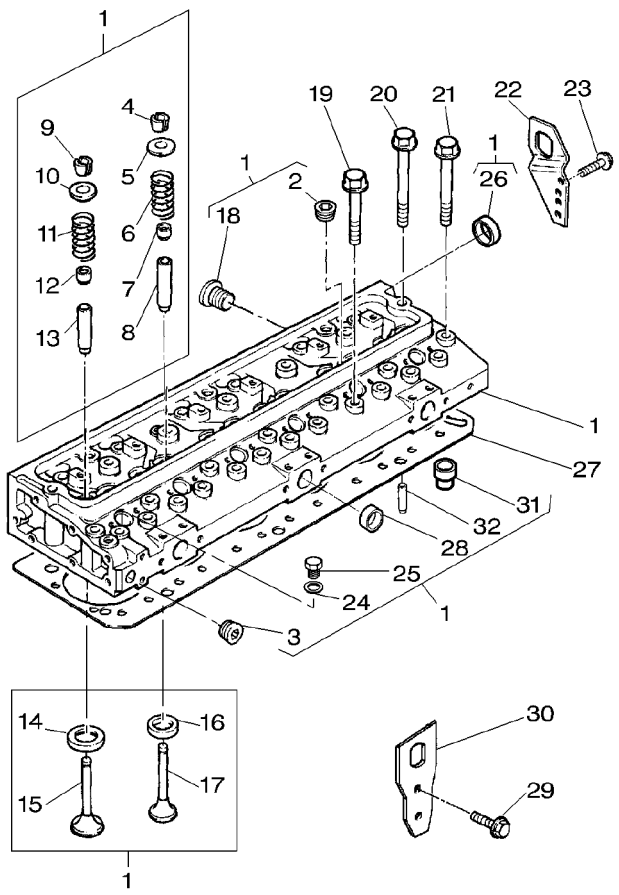

1	4223757M91	MF 8210	
1	4223594M91	MF 8220	
2	1476192X1	1	
3	376606X1	1	
4	4222141M1	1 [A]	
5	4222140M1	1	
6	4222139M1	1	
7	4223442M1	1	
8	4223581M1	1	
9	4222141M1	1 [A]	
10	4222140M1	1	
11	4222139M1	1	
12	4222333M1	1	
13	4223987M1	1 ⇒ 4222954M1	
14	4222895M1	1 MF 8210	
14	4222148M1	1 MF 8220	
15	4222894M1	1 MF 8210	
15	4222149M91	1 MF 8220	
16	4222897M1	1 MF 8210	
16	4222146M1	1 MF 8220	
17	4222896M1	1 MF 8210	
17	4222147M91	1 MF 8220	
18	4222144M1	1	
19	745662M1		
20	1476243X1		
21	745663M1		

1	KIT, CYL. HEAD	JEU CULASSE KIT TESTATA	ZYLINDERKOPFSATZ JUEGO DE CULATA
1	KIT, CYL. HEAD	JEU CULASSE KIT TESTATA	ZYLINDERKOPFSATZ JUEGO DE CULATA
6	PLUG	BOUCHON TAPPO	VERSCHL.STOPFEN TAPON
1	PLUG	BOUCHON TAPPO	VERSCHL.STOPFEN TAPON
12	COTTER	BICONE SPINOTTO	SPLINT PASADOR ABIERTO
6	CAP	CHAPEAU CAPPELLO	KAPPE TAPA
6	SPRING	RESSORT MOLLA	FEDER MUELLE
6	SEAL	JOINT ETANCHEITE PARAOLIO	DICHTRING RETEN
6	VALVE GUIDE	GUIDE DE SOUPAPE VALVE GUIDE	VENTILFUEHRUNG VALVE GUIDE
12	COTTER	BICONE SPINOTTO	SPLINT PASADOR ABIERTO
6	CAP	CHAPEAU CAPPELLO	KAPPE TAPA
6	SPRING	RESSORT MOLLA	FEDER MUELLE
6	OIL SEAL	BAGUE ETANCHEITE BOCCOLA PARAOLIO	OELDICHTRING BUJE RETENACEITE
6	GUIDE	GUIDE GUIDA	FUEHRUNG GUIA
6	INSERT	DOUILLE INSERTO	EINSATZSTUECK INSERCION
6	INSERT	DOUILLE INSERTO	EINSATZSTUECK INSERCION
6	VALVE INLET	SOUPAPE ADMISS VALVOLA IMMISSI.	EINLASSVENTIL VALVULA ADMISION
6	VALVE INLET	SOUPAPE ADMISS VALVOLA IMMISSI.	EINLASSVENTIL VALVULA ADMISION
6	INSERT	DOUILLE INSERTO	EINSATZSTUECK INSERCION
6	INSERT	DOUILLE INSERTO	EINSATZSTUECK INSERCION
6	VALVE EXHAUST	SOUPAPE ECHAPP VALVOLA SCARICO	AUSLASSVENTIL VALVULA ESCAPE
6	VALVE EXHAUST	SOUPAPE ECHAPP VALVOLA SCARICO	AUSLASSVENTIL VALVULA ESCAPE
1	PLUG	BOUCHON TAPPO	VERSCHL.STOPFEN TAPON
12	SCREW	VIS VITE	SCHRAUBE TORNILLO
2	SCREW	VIS VITE	SCHRAUBE TORNILLO
18	SCREW	VIS VITE	SCHRAUBE TORNILLO

1-ZH03-002-A

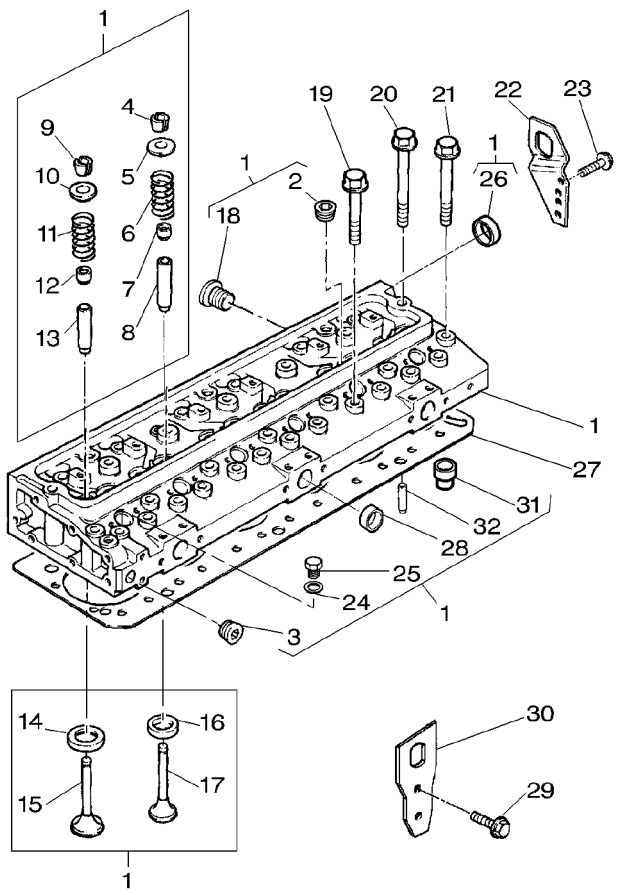

22	4222170M1		**1**	PLATE	PLAQUE PIASTRA PLATO	PLATTE PLATO
23	3637051M1		**2**	SCREW	VIS VITE	SCHRAUBE TORNILLO
24	376178X1	1	**1**	WASHER	RONDELLE RONDELLA	UNTERLEGSCHEIBE ARANDELA
25	731410M1	1	**1**	PLUG	BOUCHON TAPPO	VERSCHL.STOPFEN TAPON
26	746259M1	1	**1**	PLUG	BOUCHON TAPPO	VERSCHL.STOPFEN TAPON
27	4222354M1		**1**	HEAD GASKET	JOINT CULASSE GUARNIZIONETESTA	ZYL.KOPFDICHTUNG JUNTA DE CULATA
28	731354M1	1	**3**	PLUG	BOUCHON TAPPO	VERSCHL.STOPFEN TAPON
29	3637051M1		**2**	SCREW	VIS VITE	SCHRAUBE TORNILLO
30	4222228M1		**1**	PLATE	PLAQUE PIASTRA	PLATTE PLATO
31	4222439M1	1	**2**	DOWEL	PLOT SPINA	ZYLINDERSTIFT CENTRAJE
32	4222552M1		**2**	DOWEL	PLOT SPINA	ZYLINDERSTIFT CENTRAJE

[A] SERVICED IN PAIRS
VENDU PAR PAIRES
PAARWEISE LIEFERBAR
SERVITO IN COPPIA
SERVIDO A PARES

Lubricating Oil Filler And Breather
Remplisseur D'Huile Et Reniflard
Deleinfuellstutzen Und Entlueftung
Tappo Riempimento E Sfiatatoio
Reniflard Y Llenado Del Aceite Lubricante

10-65

1-ZH10-005-B

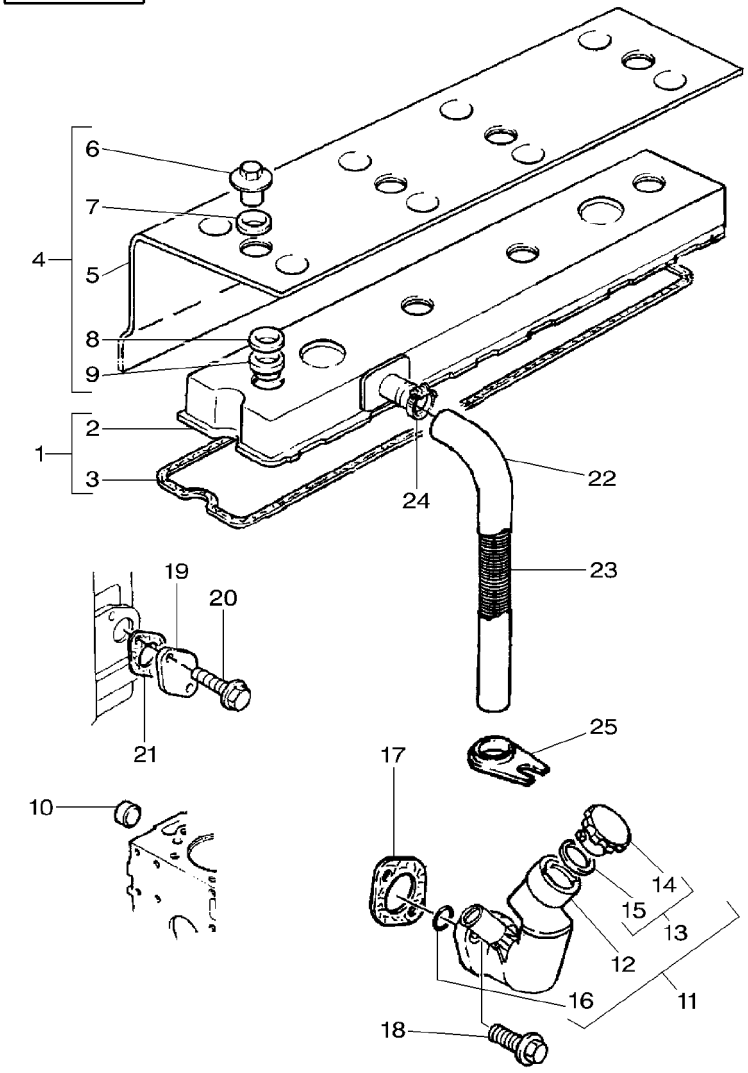

1	4223935M91	⇦	4223721M91	1	CYL.HEAD COVER	COUVRE CULASSE COPERCHIO TESTA	ZYL.KOPFDECKEL TAPA DE CULATA
2		1	REF NO 1	1	COVER	COUVERCLE COPERCHIO	DECKEL CUBIERTA
3	4222930M1	1		1	JOINT	JOINT PLAT GIUNTO	DICHTUNG JUNTA
4	4223723M91			1	COVER	COUVERCLE COPERCHIO	DECKEL CUBIERTA
5		4	REF NO 4	1	COVER	COUVERCLE COPERCHIO	DECKEL CUBIERTA
6	4223724M1	4		4	NUT	ECROU DADO	MUTTER TUERCA
7	376656X1	4		4	WASHER	RONDELLE RONDELLA	UNTERLEGSCHEIBE ARANDELA
8	4223725M1	4		4	WASHER	RONDELLE RONDELLA	UNTERLEGSCHEIBE ARANDELA
9	3638640M1	4		4	BUSH	BAGUE BOCCOLA	BUCHSE CASQUILLO
10	4222012M1			1	PLUG	BOUCHON TAPPO	VERSCHL.STOPFEN TAPON
11	4222041M1			1	FILLER	REMPLISSEUR BOCCHETTONE	EINFUELLSTUTZEN RELLENADOR
12		11	REF NO 11	1	FILLER	REMPLISSEUR BOCCHETTONE	EINFUELLSTUTZEN RELLENADOR
13	3641889M1	11		1	CAP	CHAPEAU CAPPELLO	KAPPE TAPA
14		13	REF NO 13	1	CAP	CHAPEAU CAPPELLO	KAPPE TAPA
15	3641231M1	13		1	O RING	JOINT TORIQUE ANELLO OR	O-RING JUNTA TORICA
16	4222713M1	11		1	O RING	JOINT TORIQUE ANELLO OR	O-RING JUNTA TORICA
17	3641284M1			1	JOINT	JOINT PLAT GIUNTO	DICHTUNG JUNTA
18	3637011M1			2	SCREW	VIS VITE	SCHRAUBE TORNILLO
19	3641267M1			1	PLATE	PLAQUE PIASTRA	PLATTE PLATO
20	3637008M1			1	SCREW	VIS VITE	SCHRAUBE TORNILLO
21	3641266M1			1	JOINT	JOINT PLAT GIUNTO	DICHTUNG JUNTA
22	740597M1			1	PIPE	CANALISATION TUBO	ROHRLEITUNG CANO
23	745540M1			1	SPRING	RESSORT MOLLA	FEDER MUELLE
24	3638640M1			1	BUSH	BAGUE BOCCOLA	BUCHSE CASQUILLO
25	745489M1			1	BRACKET	SUPPORT FIXATION SUPPORTO FISSAGG	HALTEARM SOPORTE

Closed Circuit Breather
Recuperateur D'Huile Avec Retour Au Carter
Olruckgewinnung
Recupero D'Olio
Recuperacion Del Aceite

10-70

1-ZA09-004-C

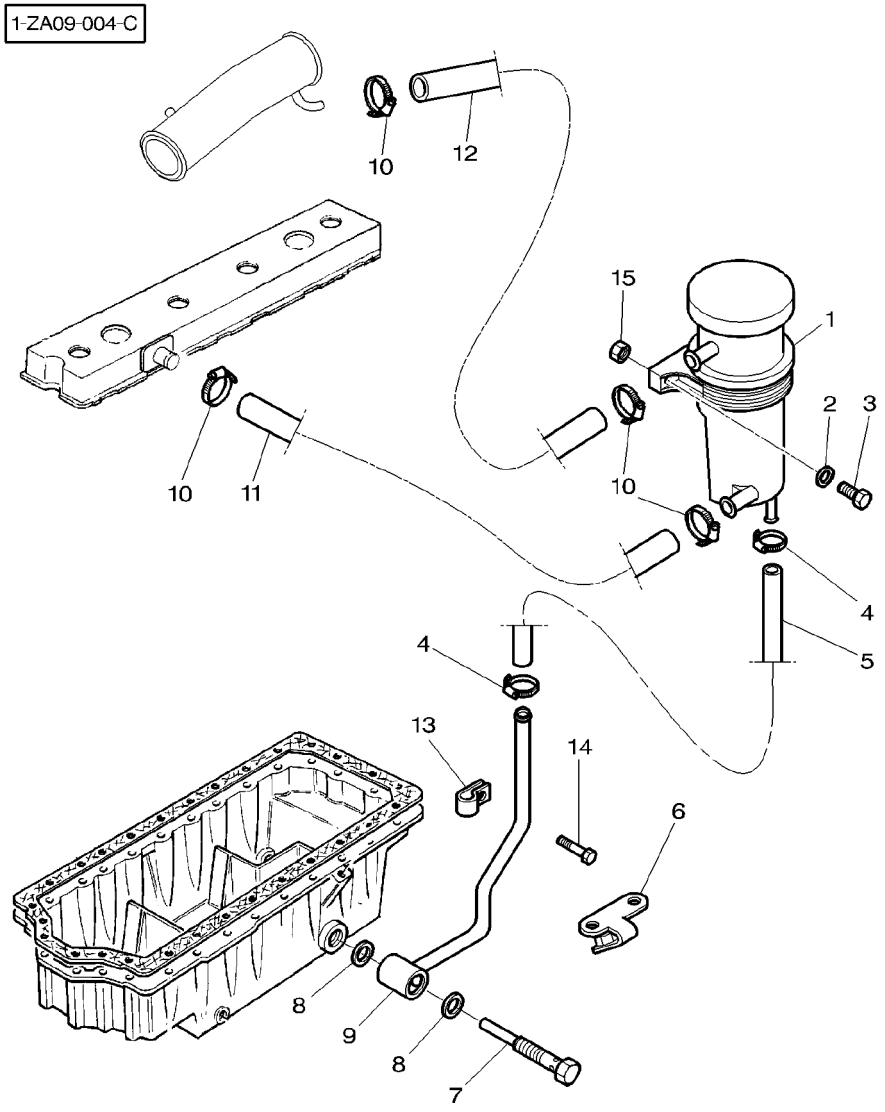

1	3780487M1		**1**	BREATHER	RENIFLARD SFIATATOIO	ENTLUEFTER RESPIRADERO
2	390971X1		**2**	WASHER METRIC	RONDELLE METR. RONDELLA METRICO	SCHEIBE METRISCH ARANDELA METRICO
3	339262X1	M6X30	**2**	BOLT METRIC	BOULON METRIQUE BULLONE METRICO	MASCH.SCHRB MET PERNO METRICO
4	3019564X1		**2**	HOSE CLIP	COLLIER DURITE STRINGITUBO	SCHLAUCHSCHELLE CLIP P.FLEXIBLE
5	3780370M1	◀▶ 645MM	**1**	HOSE	DURITE TUBO FLESSIBILE	SCHLAUCH FLEXIBLE
6	3782048M1		**1**	SUPPORT	SUPPORT SUPPORTO	LAGERUNG DISPOS.DE SOSTEN
7	3782047M1		**1**	BANJO BOLT	VIS BANJO BULLONE BANJO	HOHLSCHRAUBE TORNILLO DIFER
8	1476281X1		**2**	WASHER	RONDELLE RONDELLA	UNTERLEGSCHEIBE ARANDELA
9	3782050M1		**1**	TUBE	TUBE TUBO	ROHR TUBO
10	338614X1		**4**	HOSE CLIP	COLLIER DURITE STRINGITUBO	SCHLAUCHSCHELLE CLIP P.FLEXIBLE
11	3780374M1	◀▶ 170MM	**1**	HOSE	DURITE TUBO FLESSIBILE	SCHLAUCH FLEXIBLE
12	3782101M2	◀▶ 800MM	**1**	HOSE	DURITE TUBO FLESSIBILE	SCHLAUCH FLEXIBLE
13	736640M1		**1**	CLIP	CLIP FERMAGLIO	SCHELLE CRAPA RETEN
14	339124X1	M8X16	**1**	SCREW METRIC	VIS METRIQUE VITE METRICA	SCHRAUBE METR TORNILLO METRICO
15	339030X1	M6	**2**	NUT METRIC	ECROU METRIQUE DADO METRICO	MUTTER METRISCH TUERCA METRICO

Rocker Shaft
Axe Des Culbuteurs
Kipphebelanlage
Albero Bilancieri
Eje De Balancin

10-75

1-ZH04-002-A

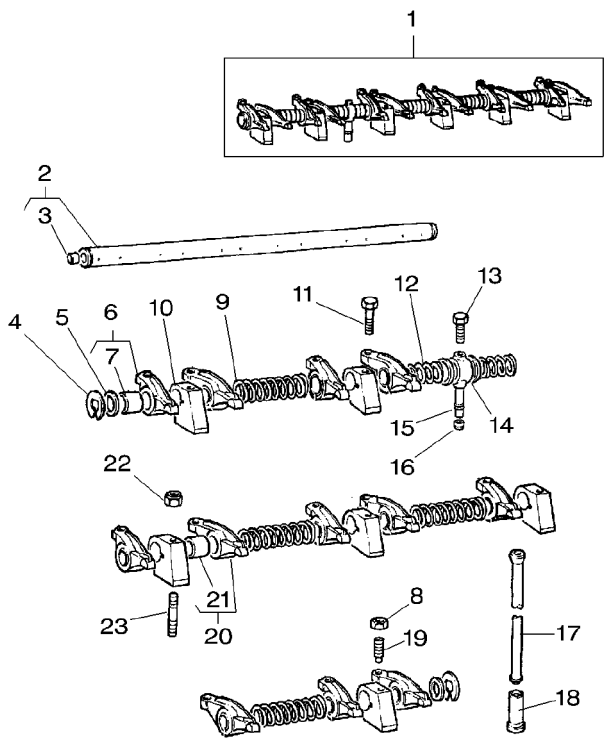

1	4222334M91		
2	4222335M91	1	
3	731330M1	2	
4	376137X1	1	
5	4222156M1	1	
6	4222157M1	1	
7	4222158M1	6	
8	376123X1	1	
9	733811M1	1	
10	3638403M1	1	
11	3637073M1		
12	733812M1	1	
13	3638500M1	1	
14	739513M91	1	
15	3638499M1	1	
16	***376525X1***		
17	733817M1		
18	4222069M1		
19	4223933M1	1	MF 8210
19	731516M1	1	MF 8220 ➡| 26-03-99
19	4223933M1	1	MF 8220 ➡ 27-03-99
20	4222159M1	1	
21	4222158M1	20	
22	3637067M1		
23	3637066M1		

1	ROCKER SHAFT ASS	RAMPE CULBUTEURS ASSE BILANCIERI	KIPPHEBELACHSE CONJ.EJE BALANC
1	ROCKER SHAFT	ARBRE CULBUTEURS ALBERO BILANCIER	SCHWINGH.WELLE EJE BALANCINES
2	PLUG	BOUCHON TAPPO	VERSCHL.STOPFEN TAPON
2	CIRCLIP	SEGMENT D ARRET ANELLO D'ARRESTO	SICHERUNGSRING CIRCULITO
2	WASHER	RONDELLE RONDELLA	UNTERLEGSCHEIBE ARANDELA
6	LEVER	LEVIER LEVA	HEBEL PALANCA
1	BUSH	BAGUE BOCCOLA	BUCHSE CASQUILLO
12	NUT	ECROU DADO	MUTTER TUERCA
4	SPRING	RESSORT MOLLA	FEDER MUELLE
6	BRACKET	SUPPORT FIXATION SUPPORTO FISSAGG	HALTEARM SOPORTE
2	SCREW	VIS VITE	SCHRAUBE TORNILLO
2	SPRING	RESSORT MOLLA	FEDER MUELLE
1	SCREW	VIS VITE	SCHRAUBE TORNILLO
2	SHIM	CALE REGLAGE SPESSORE	EINSTELLBLECH CALCE
1	CONNECTION	CONNEXION CONNESSIONE	VERBINDUNG CONEXION
1	OLIVE	OLIVE OLIVA	SCHNEIDRING OLIVA
12	ROD	TRINGLE ASTA	STANGE VARILLA
12	TAPPET	POUSSOIR SOUPAPE PUNTERIA	VENTILSTOESSEL TAQUET
12	SCREW	VIS VITE	SCHRAUBE TORNILLO
12	BOLT	BOULON BULLONE	MASCH.SCHRAUBE PERNO
12	SCREW	VIS VITE	SCHRAUBE TORNILLO
6	LEVER	LEVIER LEVA	HEBEL PALANCA
1	BUSH	BAGUE BOCCOLA	BUCHSE CASQUILLO
4	NUT	ECROU DADO	MUTTER TUERCA
4	STUD	GOUJON PRIGIONIERO	STEHBOLZEN ESPARRAGO

1-ZH07-001-A

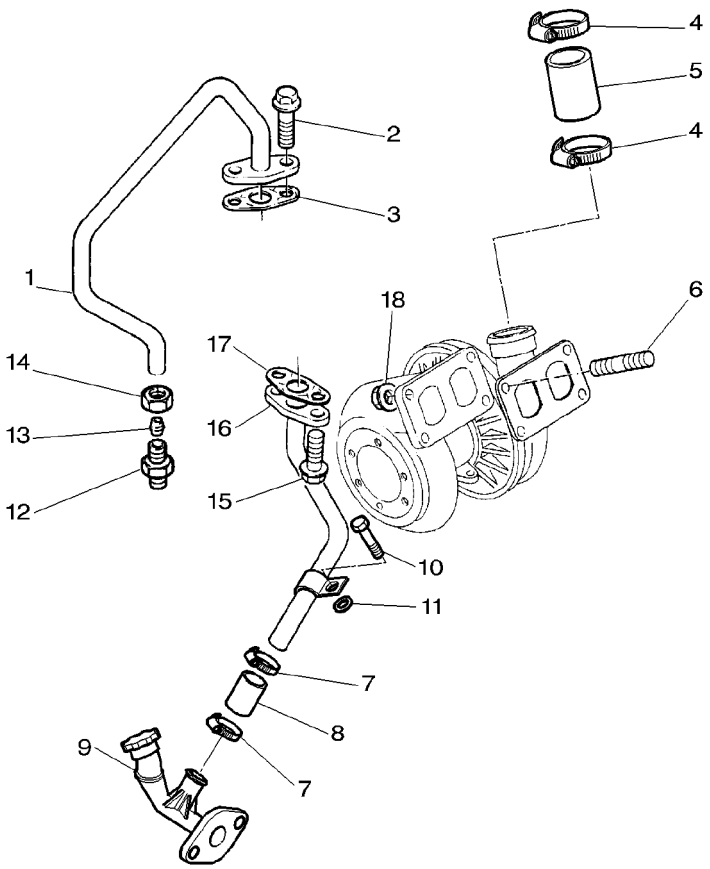

1	4222240M1		1	PIPE,OIL	TUYAU HYDRAULI. TUBO OLIO	OELLEITUNG MANGUITO ACEITE
2	3637008M1	MF 8210	2	SCREW	VIS VITE	SCHRAUBE TORNILLO
2	3637011M1	MF 8220	2	SCREW	VIS VITE	SCHRAUBE TORNILLO
3	3638256M1		1	JOINT	JOINT PLAT GIUNTO	DICHTUNG JUNTA
4	4223936M1		2	CLIP	CLIP FERMAGLIO	SCHELLE CRAPA RETEN
5	4223669M1	MF 8210	1	HOSE	DURITE TUBO FLESSIBILE	SCHLAUCH FLEXIBLE
5	4222200M1	MF 8220	1	HOSE	DURITE TUBO FLESSIBILE	SCHLAUCH FLEXIBLE
6	4223768M1	MF 8210	4	STUD	GOUJON PRIGIONIERO	STEHBOLZEN ESPARRAGO
6	3641787M1	MF 8220	4	STUD	GOUJON PRIGIONIERO	STEHBOLZEN ESPARRAGO
7	3641405M1		2	HOSE CLIP	COLLIER DURITE STRINGITUBO	SCHLAUCHSCHELLE CLIP P.FLEXIBLE
8	4222239M1		1	HOSE	DURITE TUBO FLESSIBILE	SCHLAUCH FLEXIBLE
9		10−65 No 11	1	PIPE	CANALISATION TUBO	ROHRLEITUNG CANO
10	3637048M1		1	SCREW	VIS VITE	SCHRAUBE TORNILLO
11	4223508M1		1	SPACER	ENTRETOISE DISTANZIALE	ABSTANDSTUECK PIEZA DISTANCIA
12	731654M1		1	UNION	RACCORD RACCORDO	VERSCHRAUBUNG RACOR
13	375837X1		1	SLEEVE	MANCHON MANICOTTO	HUELSE MANCHA
14	375782X1		1	NUT	ECROU DADO	MUTTER TUERCA
15	3637008M1		2	SCREW	VIS VITE	SCHRAUBE TORNILLO
16	4222238M1		1	PIPE,OIL	TUYAU HYDRAULI. TUBO OLIO	OELLEITUNG MANGUITO ACEITE
17	3638671M1	MF 8210	1	JOINT	JOINT PLAT GIUNTO	DICHTUNG JUNTA
17	4222237M1	MF 8220	1	JOINT	JOINT PLAT GIUNTO	DICHTUNG JUNTA
18	4222168M1		4	NUT	ECROU DADO	MUTTER TUERCA

1-ZH05-003-A

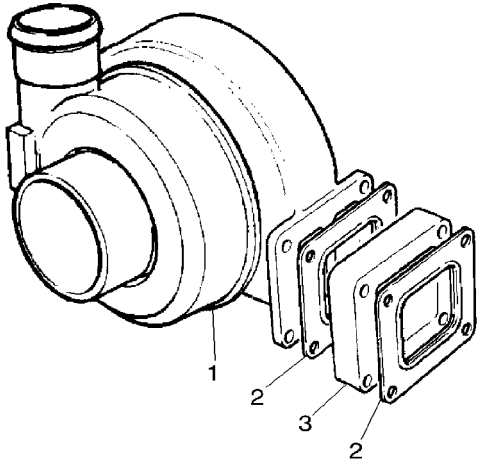

1	4223767M91	[A] MF 8210	**1**	TURBOCHARGER	TURBOCOMPRESSEUR TURBOCOMPRESSORE	TURBOLADER TURBOALIMENTACIO
1	4222246M91	[A] MF 8220	**1**	TURBOCHARGER	TURBOCOMPRESSEUR TURBOCOMPRESSORE	TURBOLADER TURBOALIMENTACIO
2	4222247M1		**2**	JOINT	JOINT PLAT GIUNTO	DICHTUNG JUNTA
3	4222248M1		**1**	SPACER	ENTRETOISE DISTANZIALE	ABSTANDSTUECK PIEZA DISTANCIA

[A] DETAILS TO BE ADVISED
DETAIL COMMUNIQUE ULTERIEUREMENT
EINZELNE WIRD BEKANNTGEGEBEN
DA AVVISARE PER PARTICOLARI
AVISAR PARA DETAILLE

1-ZH18-010-A

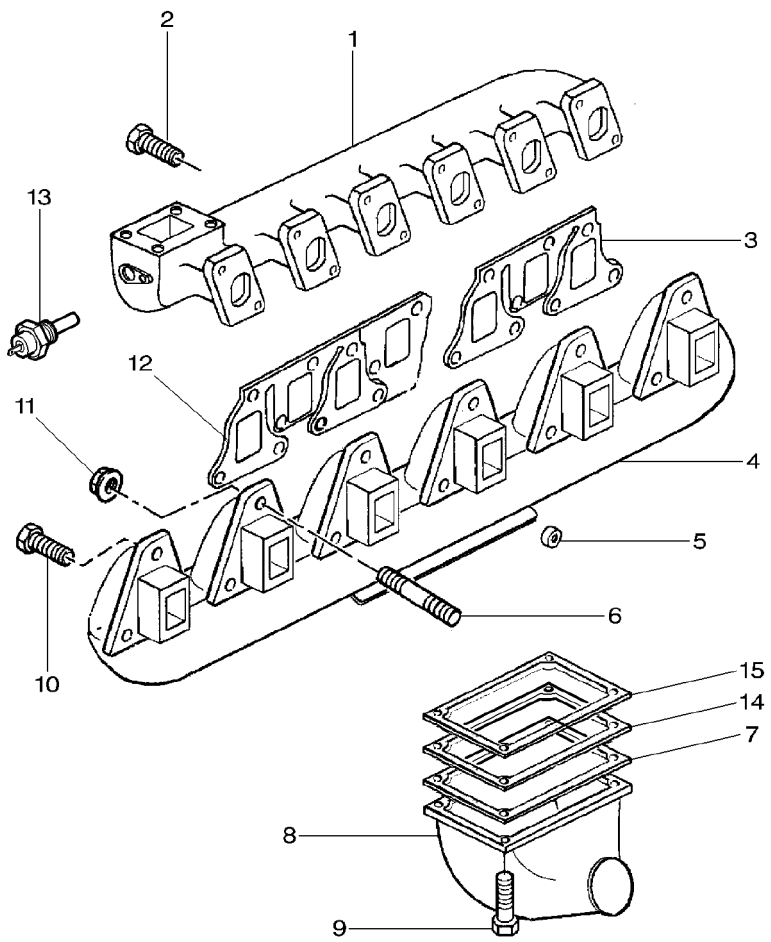

1	4222165M91	**1**	IND.MANIFOLD	COLLECTEUR ADM COLLETTORE ASP.	ANSAUGKRUEMMER MULTPLE ADMISION
2	4222451M1	**12**	SCREW	VIS VITE	SCHRAUBE TORNILLO
3	4223728M1	**1**	JOINT	JOINT PLAT GIUNTO	DICHTUNG JUNTA
4	4223966M1	**1**	EXHAUST MANIFOLD	COLLECTEUR ECH COLLETTORE SCAR.	AUSPUFFKRUEMMER COLECTOR ESCAPE
5	4222340M1	**2**	FERRULE	VIROLE GHIERA	ZWINGE MANGTO METALICO
6	4222874M1	**12**	STUD	GOUJON PRIGIONIERO	STEHBOLZEN ESPARRAGO
7	4223766M1	**1**	JOINT	JOINT PLAT GIUNTO	DICHTUNG JUNTA
8	4222198M1	**1**	ELBOW	COUDE GOMITO	WINKELSTUECK CODO
9	3641336M1	**4**	SCREW	VIS VITE	SCHRAUBE TORNILLO
10	4223751M1	**6**	SCREW	VIS VITE	SCHRAUBE TORNILLO
11	4222338M1	**12**	NUT	ECROU DADO	MUTTER TUERCA
12	4223727M1	**2**	JOINT	JOINT PLAT GIUNTO	DICHTUNG JUNTA
13	***3583543M2***	**1**	INTAKE HEATER	THERMOSTART TERMOSTARTER	VORWAERMER CALENTADOR ADM
14	4223765M1	**1**	SPACER	ENTRETOISE DISTANZIALE	ABSTANDSTUECK PIEZA DISTANCIA
15	4223766M1	**1**	JOINT	JOINT PLAT GIUNTO	DICHTUNG JUNTA

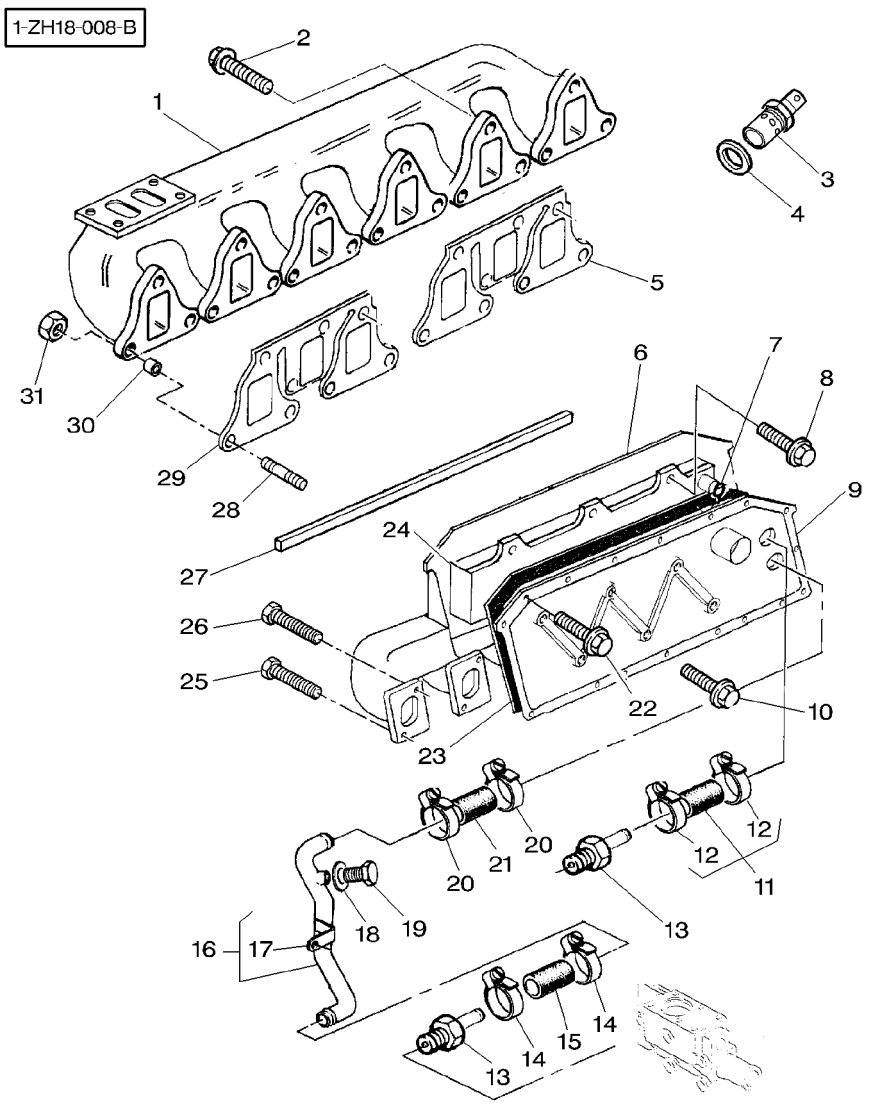

1	4223019M1		**1**	EXHAUST MANIFOLD	COLLECTEUR ECH COLLETTORE SCAR.	AUSPUFFKRUEMMER COLECTOR ESCAPE
2	4223751M1		**6**	SCREW	VIS VITE	SCHRAUBE TORNILLO
3	***3583543M2***		**2**	INTAKE HEATER	THERMOSTART TERMOSTARTER	VORWAERMER CALENTADOR ADM
4	4223590M1		**2**	WASHER	RONDELLE RONDELLA	UNTERLEGSCHEIBE ARANDELA
5	4223728M1		**2**	JOINT	JOINT PLAT GIUNTO	DICHTUNG JUNTA
6	4223782M1		**1**	IND.MANIFOLD	COLLECTEUR ADM COLLETTORE ASP.	ANSAUGKRUEMMER MULTPLE ADMISION
7	3638532M1		**8**	O RING	JOINT TORIQUE ANELLO OR	O-RING JUNTA TORICA
8	3637008M1		**8**	SCREW	VIS VITE	SCHRAUBE TORNILLO
9	4223772M1		**1**	COVER	COUVERCLE COPERCHIO	DECKEL CUBIERTA
10	4222245M1		**6**	SCREW	VIS VITE	SCHRAUBE TORNILLO
11	4223777M91		**1**	KIT, HOSE	JEU DURITES KIT TUBIFLESSIB.	SCHLAUCHSATZ MANGUITOS JUEGO
12	338615X1	11	**2**	CLAMP	COLLIER FASCETTA	HALTESCHELLE ABRAZADERA
13	4223977M1		**2**	CONNECTION	CONNEXION CONNESSIONE	VERBINDUNG CONEXION
14	338615X1		**2**	CLAMP	COLLIER FASCETTA	HALTESCHELLE ABRAZADERA
15	4223969M1		**1**	HOSE	DURITE TUBO FLESSIBILE	SCHLAUCH FLEXIBLE
16	4223970M1		**1**	PIPE,WATER	TUYAU EAU TUBO ACQUA	WASSERROHR MANGUITO AGUA
17	4222322M1	16	**1**	CLIP	CLIP FERMAGLIO	SCHELLE CRAPA RETEN
18	376077X1		**1**	WASHER	RONDELLE RONDELLA	UNTERLEGSCHEIBE ARANDELA
19	3641648M1		**1**	SCREW	VIS VITE	SCHRAUBE TORNILLO
20	338615X1		**2**	CLAMP	COLLIER FASCETTA	HALTESCHELLE ABRAZADERA
21	747961M1		**1**	HOSE	DURITE TUBO FLESSIBILE	SCHLAUCH FLEXIBLE
22	4223010M1		**10**	SCREW	VIS VITE	SCHRAUBE TORNILLO
23	4223774M1		**1**	JOINT	JOINT PLAT GIUNTO	DICHTUNG JUNTA
24	4223773M1		**1**	INTERCOOLER	RADIATEUR MULT RADIATORE INTERM	ZWISCHENKUEHLER ENFRIADOR INTERM
25	4222241M1		**6**	SCREW	VIS VITE	SCHRAUBE TORNILLO
26	4222236M1		**6**	SCREW	VIS VITE	SCHRAUBE TORNILLO

1-ZH18-008-B

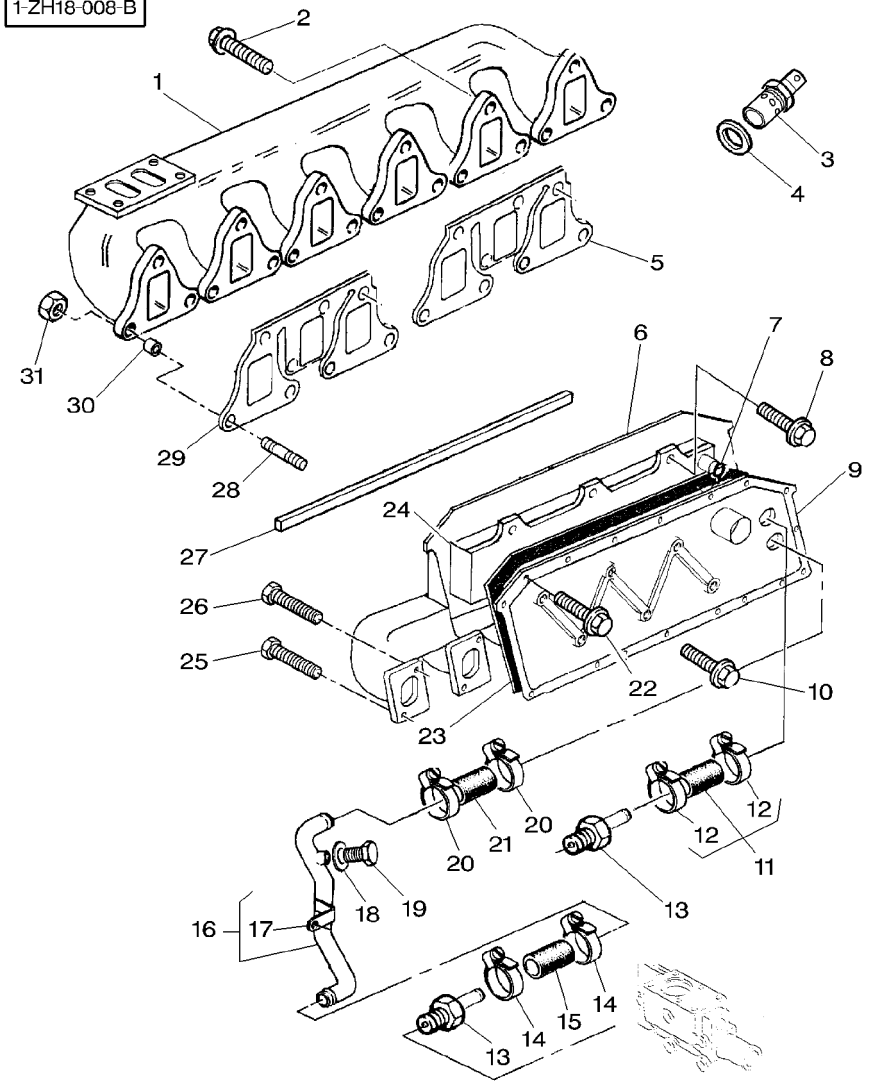

27	4222499M1	**2**	SEAL	JOINT ETANCHEITE PARAOLIO	DICHTRING RETEN
28	4222874M1	**12**	STUD	GOUJON PRIGIONIERO	STEHBOLZEN ESPARRAGO
29	4223727M1	**2**	JOINT	JOINT PLAT GIUNTO	DICHTUNG JUNTA
30	4222340M1	**2**	FERRULE	VIROLE GHIERA	ZWINGE MANGTO METALICO
31	4222338M1	**12**	NUT	ECROU DADO	MUTTER TUERCA

Timing Gear And Camshaft
Distribution Et Arbre A Cames
Steuergetriebe Und Nockenwelle
Ingranaggi E Albero Della Distribuzione
Distribucion Y Eje De Levas

10-100

1-ZH08-002-A

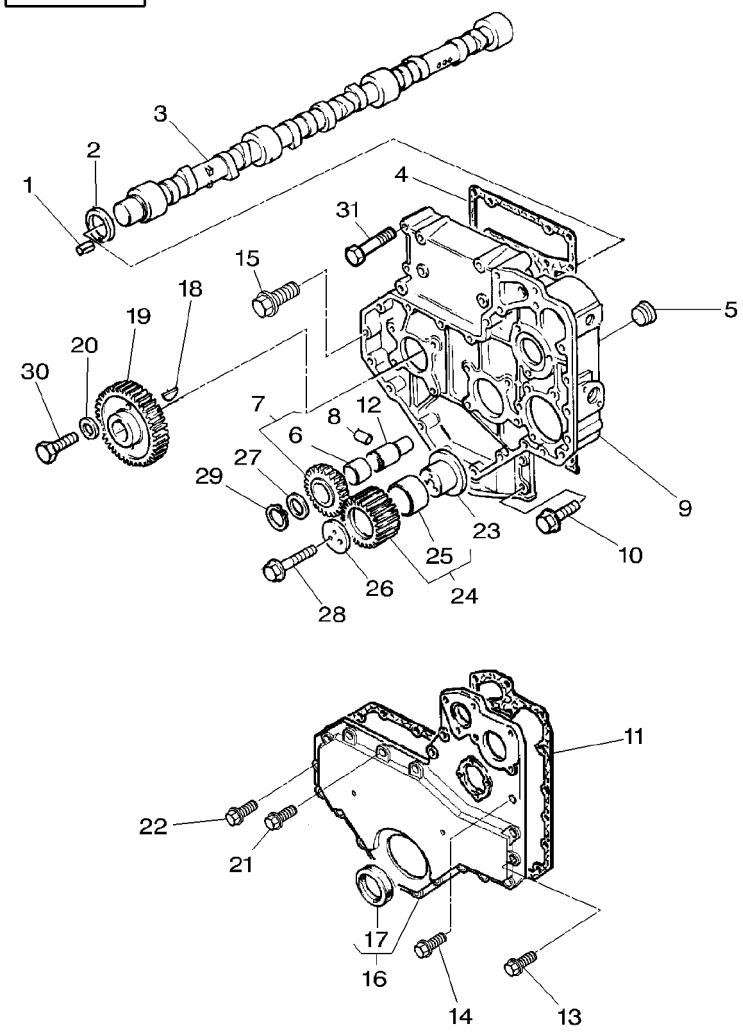

1	1476145X1		**1**	PIN	GOUPILLE PERNO	BOLZEN PASADOR
2	733728M1		**1**	WASHER	RONDELLE RONDELLA	UNTERLEGSCHEIBE ARANDELA
3	4222161M1		**1**	CAMSHAFT	ARBRE A CAMES ALBERO A CAMME	NOCKENWELLE ARBOL DE LEVAS
4	3640678M1		**1**	JOINT	JOINT PLAT GIUNTO	DICHTUNG JUNTA
5	376606X1		**1**	PLUG	BOUCHON TAPPO	VERSCHL.STOPFEN TAPON
6	1447752M1	7	**1**	BUSH	BAGUE BOCCOLA	BUCHSE CASQUILLO
7	748072M91		**1**	GEAR,IDLER	PIGNON TENSION IGRANAGGIO FOLLE	ZWISCHENRAD ENGRANAJE GUIA
8	3638414M1		**1**	PIN	GOUPILLE PERNO	BOLZEN PASADOR
9	4223596M1		**1**	TIMING CASE	CARTER REGLA. CARTER DELL DIST	STEUERGEHAEUSE. CAJA ENGRAN DIS
10	3637011M1		**4**	SCREW	VIS VITE	SCHRAUBE TORNILLO
11	4222828M1		**1**	GASKET	JOINT GUARNIZIONE	DICHTSCHEIBE EMPAQUETADURA.
12	3641847M1		**1**	SHAFT	ARBRE ALBERO	WELLE ARBOL
13	3637092M1		**2**	SCREW	VIS VITE	SCHRAUBE TORNILLO
14	3637011M1		**1**	SCREW	VIS VITE	SCHRAUBE TORNILLO
15	3637008M1		**8**	SCREW	VIS VITE	SCHRAUBE TORNILLO
16	4223472M1		**1**	COVER	COUVERCLE COPERCHIO	DECKEL CUBIERTA
17	1447690M1	16	**1**	SEAL	JOINT ETANCHEITE PARAOLIO	DICHTRING RETEN
18	2196X		**1**	KEY	CLAVETTE CHIAVETTA	PASSKEIL CLAVE
19	3641739M1		**1**	GEAR	ENGRENAGE INGRANAGGIO	ZAHNRAD ENGRANAJE
20	747557M1		**1**	WASHER	RONDELLE RONDELLA	UNTERLEGSCHEIBE ARANDELA
21	3637085M1		**6**	SCREW	VIS VITE	SCHRAUBE TORNILLO
22	3637102M1		**6**	SCREW	VIS VITE	SCHRAUBE TORNILLO
23	735852M1		**1**	HUB	MOYEU MOZZO	NABE CUBO
24	3637075M91		**1**	GEAR,IDLER	PIGNON TENSION IGRANAGGIO FOLLE	ZWISCHENRAD ENGRANAJE GUIA
25	731033M1	24	**1**	BUSH	BAGUE BOCCOLA	BUCHSE CASQUILLO
26	3641760M1		**1**	PLATE	PLAQUE PIASTRA	PLATTE PLATO

Timing Gear And Camshaft
Distribution Et Arbre A Cames
Steuergetriebe Und Nockenwelle
Ingranaggi E Albero Della Distribuzione
Distribucion Y Eje De Levas

10-100

1-ZH08-002-A

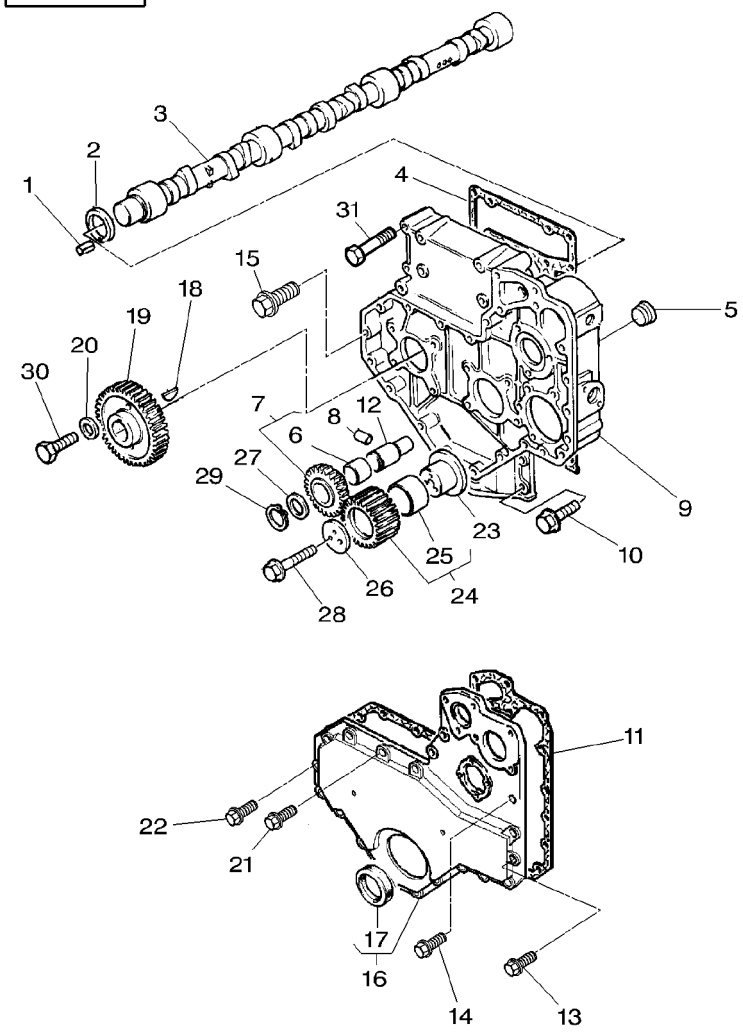

27	3637078M1	**1**	WASHER	RONDELLE RONDELLA	UNTERLEGSCHEIBE ARANDELA
28	3637076M1	**3**	SCREW	VIS VITE	SCHRAUBE TORNILLO
29	1476193X1	**1**	CIRCLIP	SEGMENT D ARRET ANELLO D'ARRESTO	SICHERUNGSRING CIRCULITO
30	1476280X1	**1**	SCREW	VIS VITE	SCHRAUBE TORNILLO
31	3637096M1	**4**	SCREW	VIS VITE	SCHRAUBE TORNILLO

1-ZH09-019-B

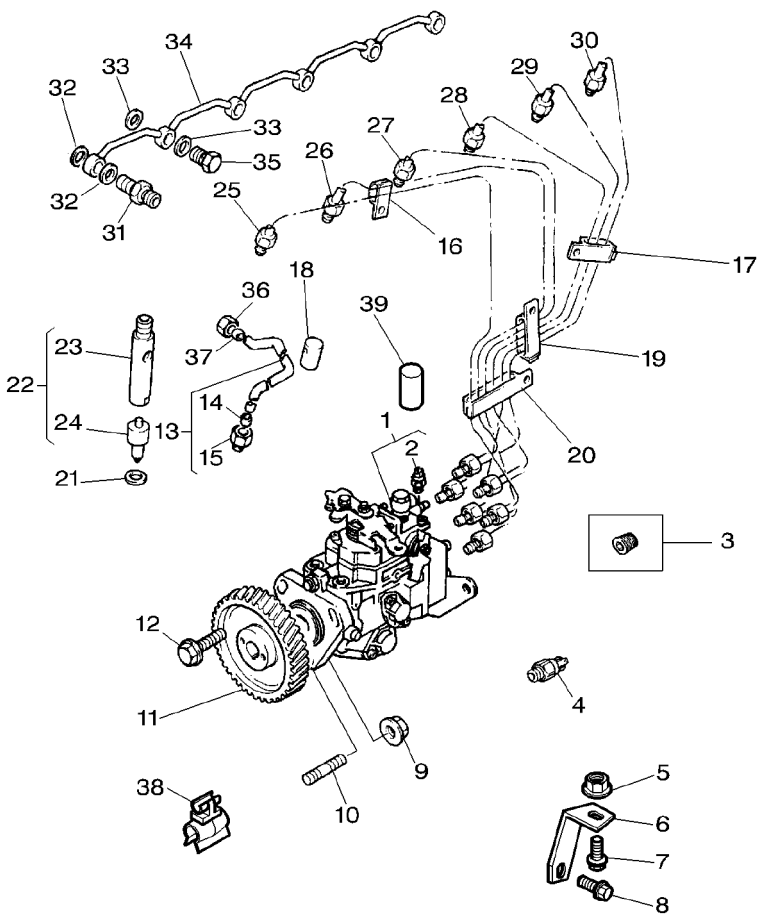

1	4223759M91		MF 8210	**1**	INJECTION PUMP	POMPE INJECTION POMPA INIEZIONE	EINSPRITZPUMPE BOMBA INYECTORA
1	4222252M91		MF 8220	**1**	INJECTION PUMP	POMPE INJECTION POMPA INIEZIONE	EINSPRITZPUMPE BOMBA INYECTORA
2	1896464M1	1		**1**	SOLENOID	SOLENOIDE SOLENOIDE	MAGNETSPULE SOLENOIDE
3	731996M1			**1**	PLUG	BOUCHON TAPPO	VERSCHL.STOPFEN TAPON
4	4223862M1			**1**	SENDER	EMETTEUR EMITTENTE	GEBER EMISOR
5	3637137M1			**1**	NUT	ECROU DADO	MUTTER TUERCA
6	4222182M1			**1**	BRACKET	SUPPORT FIXATION SUPPORTO FISSAGG	HALTEARM SOPORTE
7	3637008M1			**1**	SCREW	VIS VITE	SCHRAUBE TORNILLO
8	3637139M1			**1**	SCREW	VIS VITE	SCHRAUBE TORNILLO
9	3637137M1			**3**	NUT	ECROU DADO	MUTTER TUERCA
10	4222709M1			**3**	STUD	GOUJON PRIGIONIERO	STEHBOLZEN ESPARRAGO
11	4222832M1			**1**	GEAR,FUEL PUMP	PIGNON POMP CARB INGR.POMPA COMB.	ZAHNRAD,E-PUMPE ENGR.BOMBA COMB.
12	3637044M1			**4**	SCREW	VIS VITE	SCHRAUBE TORNILLO
13	4223107M1			**1**	PIPE,AIR	TUYAU AIR TUBO ARIA	ANSAUGLEITUNG MANGUITO AIRE
14	***376524X1***	13		**1**	OLIVE	OLIVE OLIVA	SCHNEIDRING OLIVA
15	3637157M1	13		**1**	NUT	ECROU DADO	MUTTER TUERCA
16	4222083M1			**3**	CLIP	CLIP FERMAGLIO	SCHELLE CRAPA RETEN
17	4222084M1			**1**	CLIP	CLIP FERMAGLIO	SCHELLE CRAPA RETEN
18	4224171M1			**1**	CAP	CHAPEAU CAPPELLO	KAPPE TAPA
19	4223085M1			**1**	GASKET	JOINT GUARNIZIONE	DICHTSCHEIBE EMPAQUETADURA.
20	4222294M1			**1**	CLIP	CLIP FERMAGLIO	SCHELLE CRAPA RETEN
21	3641568M1			**6**	WASHER	RONDELLE RONDELLA	UNTERLEGSCHEIBE ARANDELA
22	4223760M91		MF 8210	**6**	ATOMISER	INJECTEUR ATOMIZZATORE	ZERSTAEUBER ATOMIZADOR
22	4222255M1		MF 8220	**6**	ATOMISER	INJECTEUR ATOMIZZATORE	ZERSTAEUBER ATOMIZADOR
23	4222976M1	22	MF 8210	**1**	ATOMISER BODY	CORPS INJECTEUR CORPO INIETTORE	DUESENKOERPER CUERPO ATOMIZ.
23	4222190M1	22	MF 8220	**1**	ATOMISER BODY	CORPS INJECTEUR CORPO INIETTORE	DUESENKOERPER CUERPO ATOMIZ.

1-ZH09-019-B

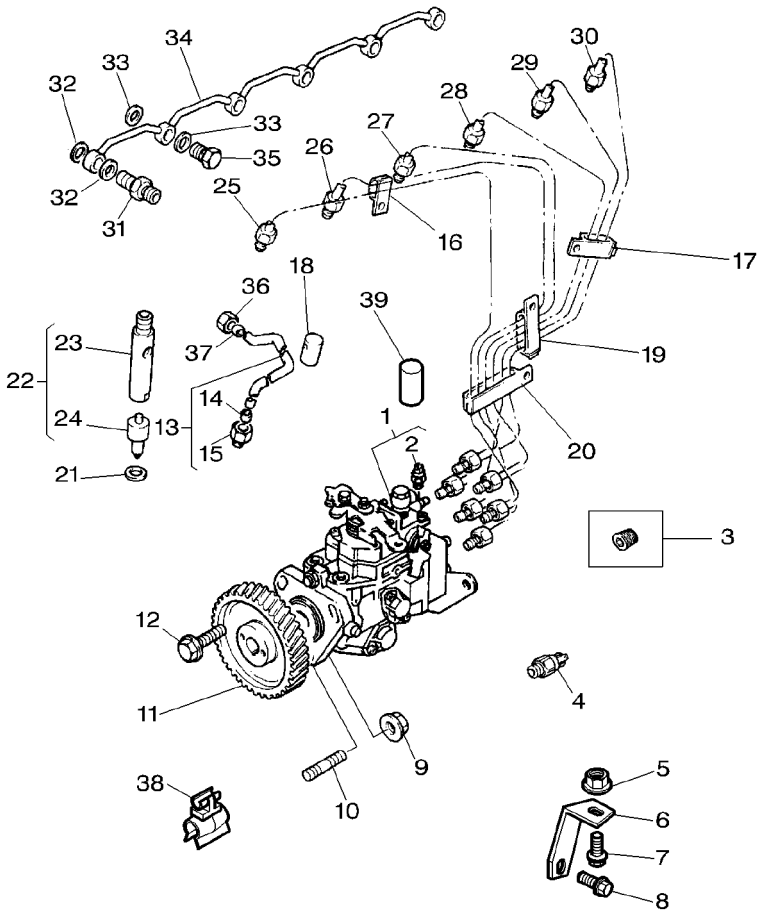

24	4223761M1	22 MF 8210	**1**	NOZZLE	NEZ INJECTEUR INIETTORE	DUESE TOBERA
24	4222256M1	22 MF 8220	**1**	NOZZLE	NEZ INJECTEUR INIETTORE	DUESE TOBERA
25	4223597M1	NO.1 CYL.	**1**	PIPE,FUEL	TUYAU, CARBURANT TUBO NAFTA.	DIESELLEITUNG MANGUITO GASOIL
26	4223598M1	NO.2 CYL.	**1**	PIPE,FUEL	TUYAU, CARBURANT TUBO NAFTA.	DIESELLEITUNG MANGUITO GASOIL
27	4223715M1	NO.3 CYL.	**1**	PIPE,FUEL	TUYAU, CARBURANT TUBO NAFTA.	DIESELLEITUNG MANGUITO GASOIL
28	4223716M1	NO.4 CYL.	**1**	PIPE,FUEL	TUYAU, CARBURANT TUBO NAFTA.	DIESELLEITUNG MANGUITO GASOIL
29	4223717M1	NO.5 CYL.	**1**	PIPE,FUEL	TUYAU, CARBURANT TUBO NAFTA.	DIESELLEITUNG MANGUITO GASOIL
30	4223718M1	NO.6 CYL.	**1**	PIPE,FUEL	TUYAU, CARBURANT TUBO NAFTA.	DIESELLEITUNG MANGUITO GASOIL
31	4222194M1		**1**	CONNECTION	CONNEXION CONNESSIONE	VERBINDUNG CONEXION
32	4222193M1		**2**	WASHER	RONDELLE RONDELLA	UNTERLEGSCHEIBE ARANDELA
33	4222193M1		**10**	WASHER	RONDELLE RONDELLA	UNTERLEGSCHEIBE ARANDELA
34	4222192M1		**1**	LEAK-OFF PIPE	TUYAUTERIE FUITE TUBO DRENAGGIO	LECKOEL-LEITUNG TUBO DE ESCAPE.
35	3641699M1		**5**	BANJO BOLT	VIS BANJO BULLONE BANJO	HOHLSCHRAUBE TORNILLO DIFER
36	376521X1		**1**	UNION NUT	ECROU RACCORD DADO D'UNIONE	ANSCHLUSSMUTTER TUERCA UNION
37	***376524X1***		**1**	OLIVE	OLIVE OLIVA	SCHNEIDRING OLIVA
38		MF 8210	**X**	NOT USED	NON UTILISE INUSATO	NICHT VERWENDET NO SE USA
38	4223106M1	MF 8220	**2**	CLIP	CLIP FERMAGLIO	SCHELLE CRAPA RETEN
39	4223953M1	MF 8220	**1**	CAP	CHAPEAU CAPPELLO	KAPPE TAPA

1-ZH09-017-B

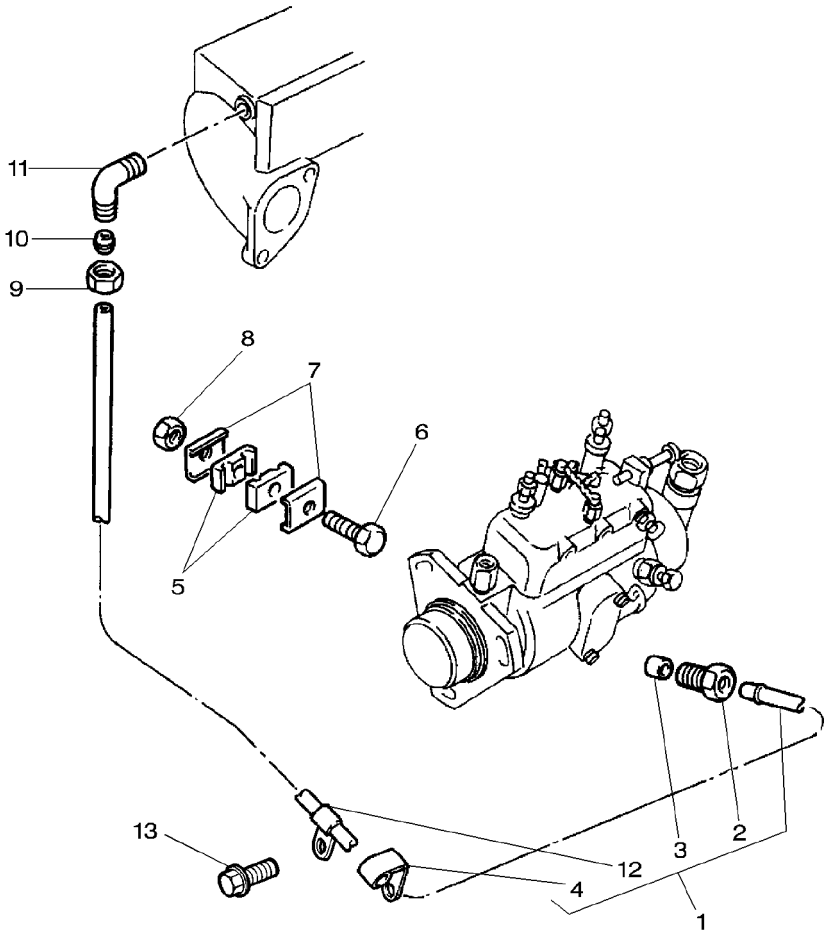

1	4223860M91		**1**	PIPE,AIR	TUYAU AIR TUBO ARIA	ANSAUGLEITUNG MANGUITO AIRE
2	3637157M1	1	**1**	NUT	ECROU DADO	MUTTER TUERCA
3	3638445M1	1	**1**	OLIVE	OLIVE OLIVA	SCHNEIDRING OLIVA
4	747674M1	1	**1**	CLIP	CLIP FERMAGLIO	SCHELLE CRAPA RETEN
5	733868M1		**1**	CLIP	CLIP FERMAGLIO	SCHELLE CRAPA RETEN
6	3637173M1		**1**	SCREW	VIS VITE	SCHRAUBE TORNILLO
7	733869M1		**2**	CHANNEL	CANAL PROFILATO	KANAL CANAL
8	3637174M1		**1**	NUT	ECROU DADO	MUTTER TUERCA
9	375738X1		**1**	NUT	ECROU DADO	MUTTER TUERCA
10	827276M1		**1**	OLIVE	OLIVE OLIVA	SCHNEIDRING OLIVA
11	731250M1		**1**	CONNECTION	CONNEXION CONNESSIONE	VERBINDUNG CONEXION
12	3637171M1	1	**1**	CLIP	CLIP FERMAGLIO	SCHELLE CRAPA RETEN
13	3641654M1		**1**	SCREW	VIS VITE	SCHRAUBE TORNILLO

1-ZH09-018-A

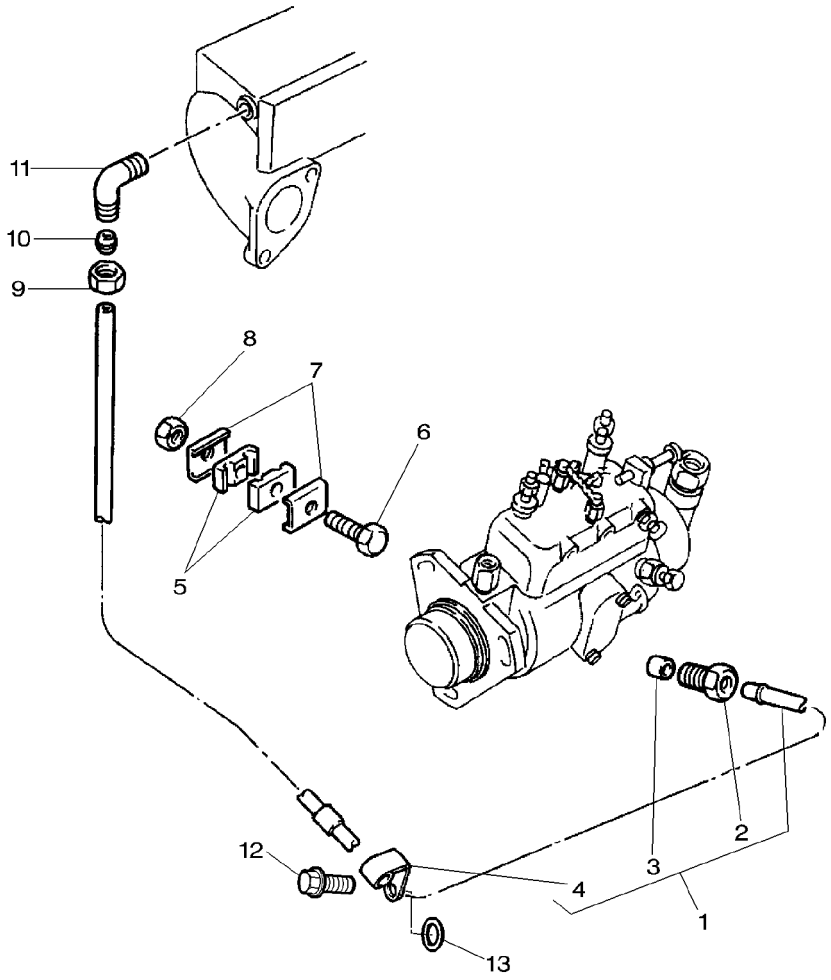

1	4223509M1		**1**	PIPE,AIR	TUYAU AIR TUBO ARIA	ANSAUGLEITUNG MANGUITO AIRE
2	3637157M1	1	**1**	NUT	ECROU DADO	MUTTER TUERCA
3	***376524X1***	1	**1**	OLIVE	OLIVE OLIVA	SCHNEIDRING OLIVA
4	3637171M1	1	**1**	CLIP	CLIP FERMAGLIO	SCHELLE CRAPA RETEN
5	733868M1		**1**	CLIP	CLIP FERMAGLIO	SCHELLE CRAPA RETEN
6	3637173M1		**1**	SCREW	VIS VITE	SCHRAUBE TORNILLO
7	733869M1		**2**	CHANNEL	CANAL PROFILATO	KANAL CANAL
8	3637174M1		**1**	NUT	ECROU DADO	MUTTER TUERCA
9	375738X1		**1**	NUT	ECROU DADO	MUTTER TUERCA
10	827276M1		**1**	OLIVE	OLIVE OLIVA	SCHNEIDRING OLIVA
11	731250M1		**1**	CONNECTION	CONNEXION CONNESSIONE	VERBINDUNG CONEXION
12	4223010M1		**1**	SCREW	VIS VITE	SCHRAUBE TORNILLO
13	743028M1		**1**	SPACER	ENTRETOISE DISTANZIALE	ABSTANDSTUECK PIEZA DISTANCIA

Lubricating Oil Sump
Carter D' Huile
Schmieroelwanne
Coppa Olio
Carter Del Aceite Lubricante

10-120

1-ZH11-002-B

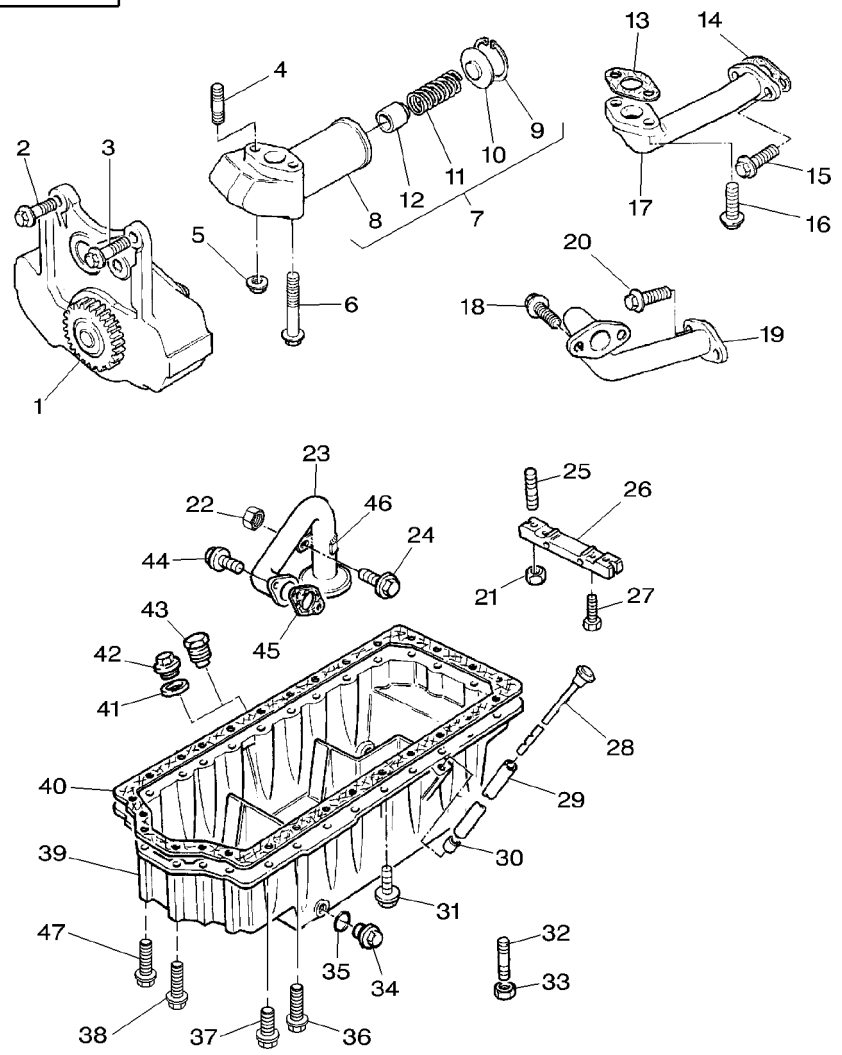

1	3641171M91		1	OIL PUMP	POMPE A HUILE POMPA OLIO	OELPUMPE BOMBA DE ACEITE
2	3637011M1		2	SCREW	VIS VITE	SCHRAUBE TORNILLO
3	3637044M1		1	SCREW	VIS VITE	SCHRAUBE TORNILLO
4	3638684M1		1	STUD	GOUJON PRIGIONIERO	STEHBOLZEN ESPARRAGO
5	3637137M1		1	NUT	ECROU DADO	MUTTER TUERCA
6	3637095M1		1	SCREW	VIS VITE	SCHRAUBE TORNILLO
7	3637242M91		1	VALVE	SOUPAPE VALVOLA	VENTIL VALVULA
8		7 ▰ REF. 7	1	BODY	CORPS CORPO	KOERPER CUERPO
9	3637243M1	7	1	CIRCLIP	SEGMENT D ARRET ANELLO D'ARRESTO	SICHERUNGSRING CIRCULITO
10	744534M1	7	1	SEAT	SIEGE SEDILE	SITZ ASIENTO
11	742692M1	7	1	SPRING	RESSORT MOLLA	FEDER MUELLE
12	744397M1	7	1	PLUNGER	PLONGEUR STANTUFFO	TAUCHKOLBEN EMBOLO
13	3641291M1		1	JOINT	JOINT PLAT GIUNTO	DICHTUNG JUNTA
14	3641292M1		1	JOINT	JOINT PLAT GIUNTO	DICHTUNG JUNTA
15	4222100M1		2	SCREW	VIS VITE	SCHRAUBE TORNILLO
16	3637247M1		2	SCREW	VIS VITE	SCHRAUBE TORNILLO
17	4222099M1		1	PIPE,OIL	TUYAU HYDRAULI. TUBO OLIO	OELLEITUNG MANGUITO ACEITE
18	3637011M1		2	SCREW	VIS VITE	SCHRAUBE TORNILLO
19	3640876M91		1	PIPE	CANALISATION TUBO	ROHRLEITUNG CANO
20	3637011M1		2	SCREW	VIS VITE	SCHRAUBE TORNILLO
21	3637137M1		2	NUT	ECROU DADO	MUTTER TUERCA
22	3637137M1		1	NUT	ECROU DADO	MUTTER TUERCA
23	3637240M91		1	PIPE	CANALISATION TUBO	ROHRLEITUNG CANO
24	3637044M1		1	SCREW	VIS VITE	SCHRAUBE TORNILLO
25	4222712M1		2	STUD	GOUJON PRIGIONIERO	STEHBOLZEN ESPARRAGO
26	3641863M1		1	BRIDGE PIECE	PONTET TRAVERSA PONTE	TRAVERSE CODO DE CRUCE

Lubricating Oil Sump
Carter D' Huile
Schmieroelwanne
Coppa Olio
Carter Del Aceite Lubricante

10-120

1-ZH11-002-B

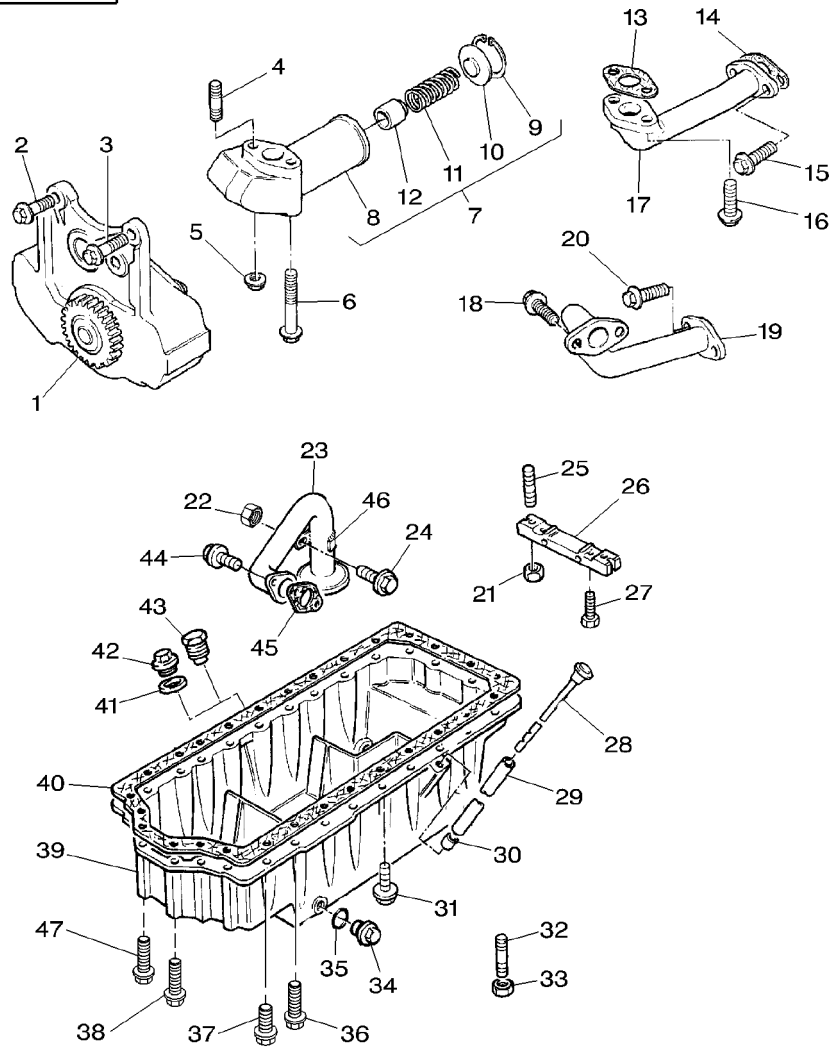

27	3637236M1	**2**	SCREW	VIS VITE	SCHRAUBE TORNILLO
28	3641818M1	**1**	DIPSTICK	JAUGE ASTA LIVELLO	MESSTAB VARILLA ACEITE
29	3641779M91	**1**	TUBE ASSY	ENSEMBLE TUBE TUBO COMPL.	ROHR KPL CONJ.DE TUBO
30	739562M1	**1**	OLIVE	OLIVE OLIVA	SCHNEIDRING OLIVA
31	4223010M1	**11**	SCREW	VIS VITE	SCHRAUBE TORNILLO
32	4222712M1	**2**	STUD	GOUJON PRIGIONIERO	STEHBOLZEN ESPARRAGO
33	3637137M1	**2**	NUT	ECROU DADO	MUTTER TUERCA
34	748160M1	**1**	PLUG	BOUCHON TAPPO	VERSCHL.STOPFEN TAPON
35	3638382M1	**1**	O RING	JOINT TORIQUE ANELLO OR	O-RING JUNTA TORICA
36	3637207M1	**2**	SCREW	VIS VITE	SCHRAUBE TORNILLO
37	4222836M1	**3**	SCREW	VIS VITE	SCHRAUBE TORNILLO
38	3637207M1	**4**	SCREW	VIS VITE	SCHRAUBE TORNILLO
39	4224003M1	**1**	SUMP	CARTER D HUILE SOTTOCOPPA	OELWANNE CARTER
40	3638562M1	**1**	JOINT	JOINT PLAT GIUNTO	DICHTUNG JUNTA
41	1476281X1	**1**	WASHER	RONDELLE RONDELLA	UNTERLEGSCHEIBE ARANDELA
42	376501X1	**1**	PLUG	BOUCHON TAPPO	VERSCHL.STOPFEN TAPON
43	3638329M1	**1**	PLUG	BOUCHON TAPPO	VERSCHL.STOPFEN TAPON
44	3637011M1	**2**	SCREW	VIS VITE	SCHRAUBE TORNILLO
45	4222298M1	**1**	GASKET	JOINT GUARNIZIONE	DICHTSCHEIBE EMPAQUETADURA.
46	748244M1	**1**	CLIP	CLIP FERMAGLIO	SCHELLE CRAPA RETEN
47	3637048M1	**2**	SCREW	VIS VITE	SCHRAUBE TORNILLO

Lubricating Oil Filter And Integral Cooler
Filtre A Huile Et Refroidisseur D'Huile
Schmieroelfilter Und Motorseitiger Delhuehler
Filtro Olio Refrigeratore Integral
Filtro Y Engriador Integral

10-125

1-ZH12-004-A

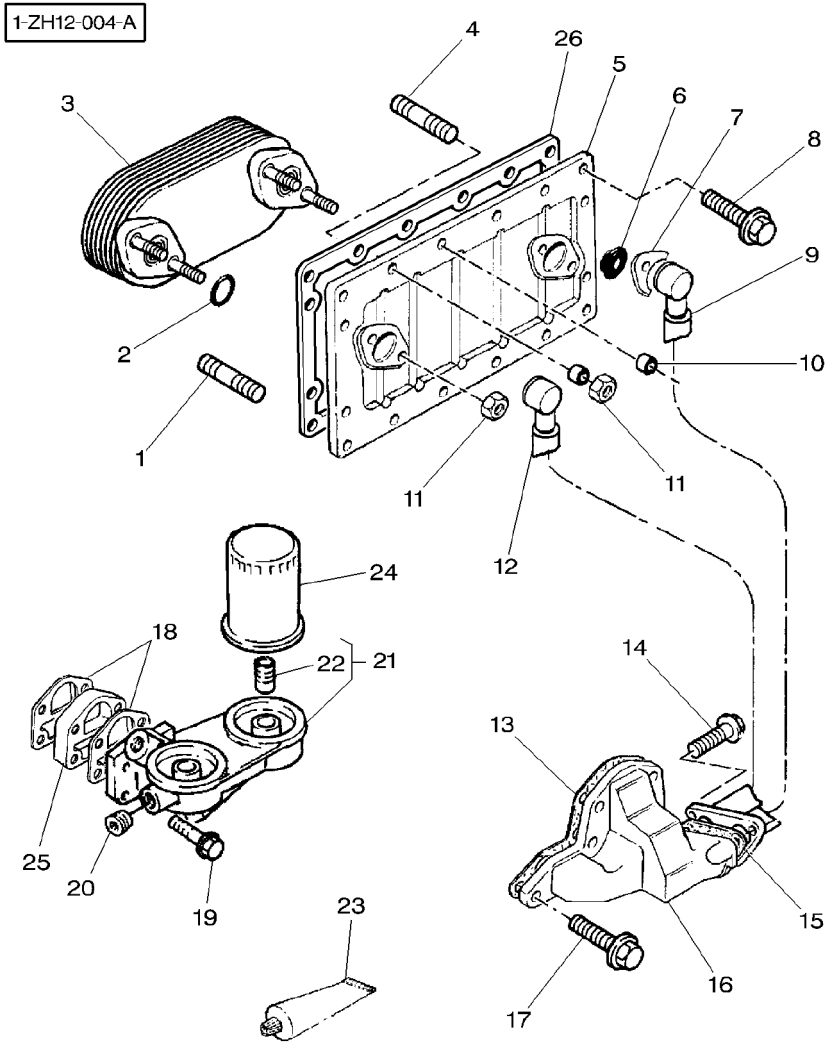

1	4223888M1			2	STUD	GOUJON PRIGIONIERO	STEHBOLZEN ESPARRAGO
2	4222507M1			2	O RING	JOINT TORIQUE ANELLO OR	O-RING JUNTA TORICA
3	4223912M91	➡|	U714389E	1	COOLER	REFROIDISSEUR REFRIGERATORE	KUEHLAGGREGAT ENFRIADOR
3	4223950M91	|➡	U714390E	1	OIL COOLER	REFROIDISS HUILE RADIATORE OLIO	OELKUEHLER REFRIG DE ACEIT
4	1476283M1			3	STUD	GOUJON PRIGIONIERO	STEHBOLZEN ESPARRAGO
5	4222551M91	➡|	U714389E	1	HOUSING	CARTER CARCASSA	GEHAEUSE ALOJAMIENTO
5	4223951M91	|➡	U714390E	1	HOUSING	CARTER CARCASSA	GEHAEUSE ALOJAMIENTO
6	4222547M1			2	SEAL	JOINT ETANCHEITE PARAOLIO	DICHTRING RETEN
7	4222550M1			4	FLANGE	FLASQUE FLANGIA	FLANSCH PLETINA
8	3637044M1			10	SCREW	VIS VITE	SCHRAUBE TORNILLO
9	4222548M1	◀▶	365MM	1	PIPE	CANALISATION TUBO	ROHRLEITUNG CANO
10	735220M1			5	SPACER	ENTRETOISE DISTANZIALE	ABSTANDSTUECK PIEZA DISTANCIA
11	3637137M1			7	NUT	ECROU DADO	MUTTER TUERCA
12	4222549M1	◀▶	540MM	1	PIPE	CANALISATION TUBO	ROHRLEITUNG CANO
13	3641286M1			1	JOINT	JOINT PLAT GIUNTO	DICHTUNG JUNTA
14	3637011M1			3	SCREW	VIS VITE	SCHRAUBE TORNILLO
15	**3641287M1**			1	JOINT	JOINT PLAT GIUNTO	DICHTUNG JUNTA
16	4222234M1			1	HOUSING	CARTER CARCASSA	GEHAEUSE ALOJAMIENTO
17	3637051M1			5	SCREW	VIS VITE	SCHRAUBE TORNILLO
18	3638708M1			2	JOINT	JOINT PLAT GIUNTO	DICHTUNG JUNTA
19	3640871M1			4	SCREW	VIS VITE	SCHRAUBE TORNILLO
20	1476192X1			1	PLUG	BOUCHON TAPPO	VERSCHL.STOPFEN TAPON
21	3641207M1			1	FILTER HEAD	TETE DE FILTRE TESTA FILTRO	FILTERKOPF CABEZA DE FILTRO
22	3641208M1	21		2	ADAPTOR	ADAPTATEUR ADATTATORE	REDUZIERNIPPEL ADAPTADOR
23	4222702M1	➡|	26-03-1999	1	LOCTITE	LOCTITE LOCTITE	LOCTITE LOCTITE
24	***1447048M1***				2	OIL FILTER	FILTRE HUILE FILTRO OLIO	OELFILTER FILTRO DE ACEITE

1-ZH12-004-A

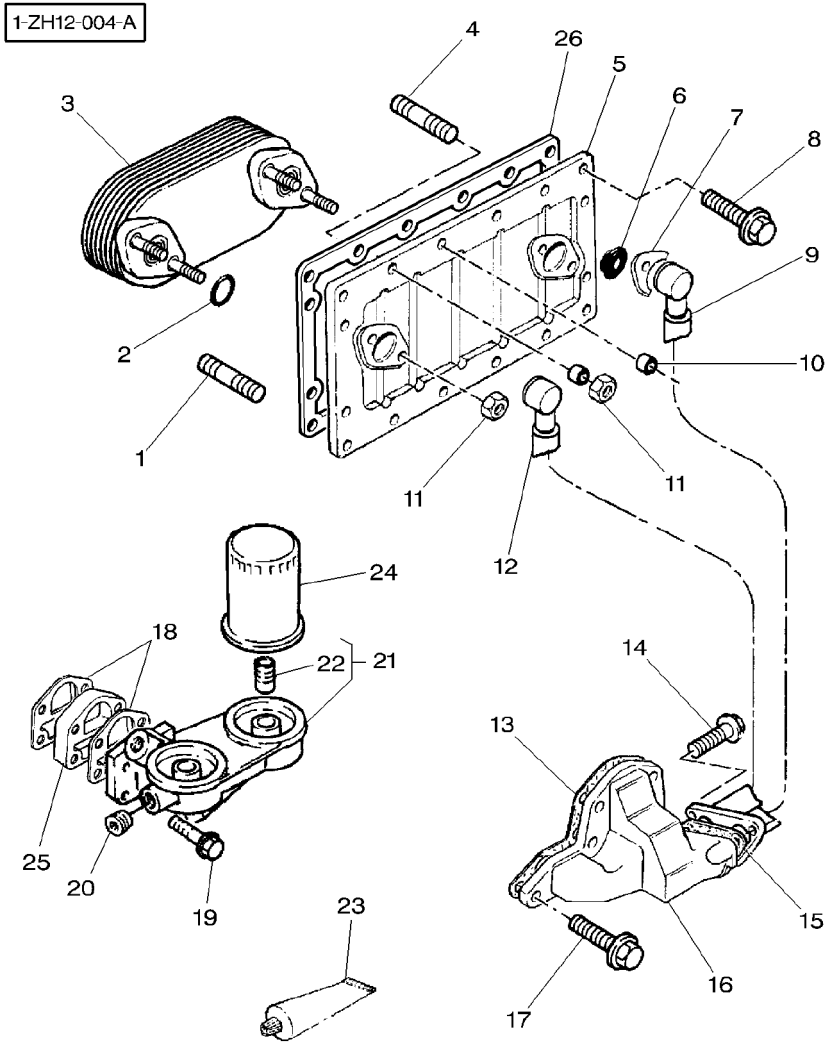

25	3640872M1			**1**	ADAPTOR	ADAPTATEUR ADATTATORE REDUZIERNIPPEL ADAPTADOR
26	4222546M1	➡	27-03-1999	**1**	GASKET	JOINT GUARNIZIONE DICHTSCHEIBE EMPAQUETADURA.

Water Pump, Thermostat And Heat Exchanger
Pompe A Eau Et Thermostat
Wasserpumpe, Thermostat Und Waermetauscher
Pompa Acqua, Termostato E Scambiatore Di Calore
Bomba Del Agua, Termostato Cambiador De Temperatura

10-130

M.F 8210
M.F 8210
M.F 8210
M.F 8210
M.F 8210

1-ZH13-007-B

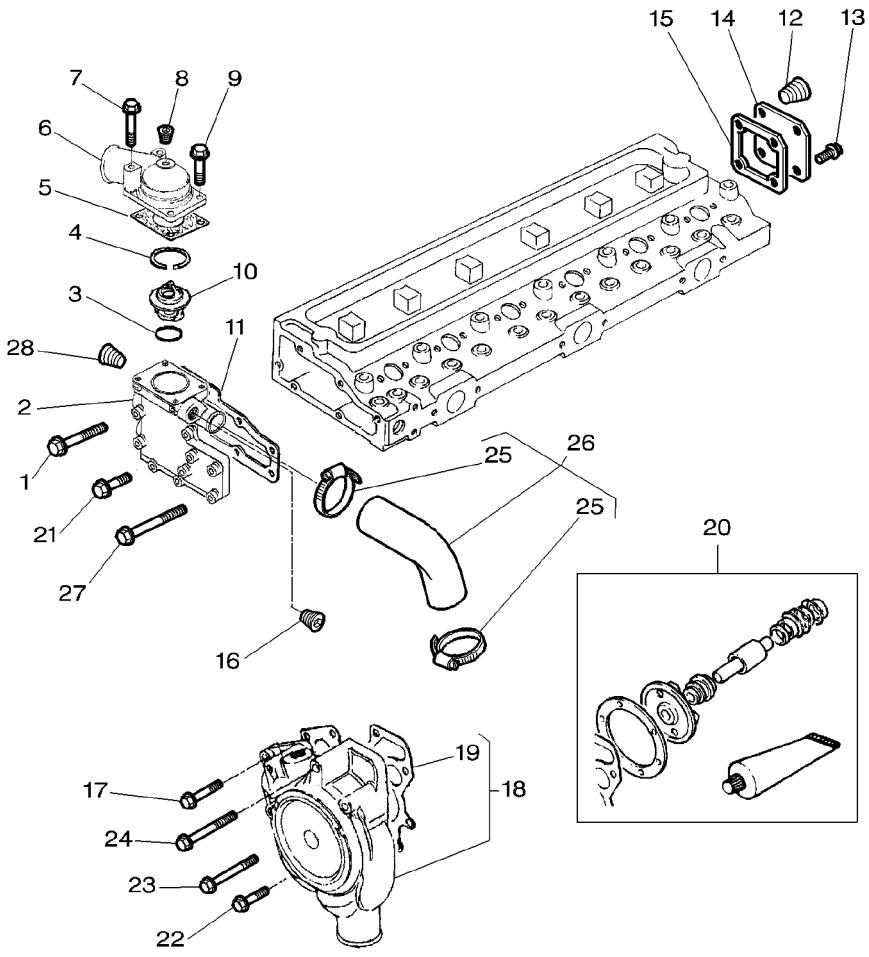

1	3637048M1		**5**	SCREW	VIS VITE	SCHRAUBE TORNILLO
2	4223754M1		**1**	HOUSING	CARTER CARCASSA	GEHAEUSE ALOJAMIENTO
3	4222848M1		**1**	O RING	JOINT TORIQUE ANELLO OR	O-RING JUNTA TORICA
4	4222847M1		**1**	RING	ANNEAU ANELLO	RING ARO
5	4222851M1		**1**	GASKET	JOINT GUARNIZIONE	DICHTSCHEIBE EMPAQUETADURA.
6	4222850M1		**1**	CONNECTION	CONNEXION CONNESSIONE	VERBINDUNG CONEXION
7	3637008M1		**2**	SCREW	VIS VITE	SCHRAUBE TORNILLO
8	731997M1		**1**	PLUG	BOUCHON TAPPO	VERSCHL.STOPFEN TAPON
9	3640628M1		**2**	SCREW	VIS VITE	SCHRAUBE TORNILLO
10	4222845M1		**1**	THERMOSTAT	THERMOSTAT TERMOSTATO	THERMOSTAT TERMOSTATO
11	4223763M1		**1**	GASKET	JOINT GUARNIZIONE	DICHTSCHEIBE EMPAQUETADURA.
12	376606X1		**1**	PLUG	BOUCHON TAPPO	VERSCHL.STOPFEN TAPON
13	3637044M1		**3**	SCREW	VIS VITE	SCHRAUBE TORNILLO
14	4222842M1		**1**	COVER	COUVERCLE COPERCHIO	DECKEL CUBIERTA
15	4222155M1		**1**	JOINT	JOINT PLAT GIUNTO	DICHTUNG JUNTA
16	376606X1		**1**	PLUG	BOUCHON TAPPO	VERSCHL.STOPFEN TAPON
17	3637199M1		**1**	SCREW	VIS VITE	SCHRAUBE TORNILLO
18	4223101M91		**1**	WATER PUMP	POMPE A EAU POMPA ACQUA	WASSERPUMPE BOMBA DE AGUA
19	4222849M1	18	**1**	GASKET	JOINT GUARNIZIONE	DICHTSCHEIBE EMPAQUETADURA.
20	4222841M91		**X**	KIT, REPAIR	JEU REPARATION KIT RIPARAZIONE	REPARATURSATZ JUEGO REPARACION
21	3637046M1		**1**	SCREW	VIS VITE	SCHRAUBE TORNILLO
22	3637092M1		**3**	SCREW	VIS VITE	SCHRAUBE TORNILLO
23	4222836M1		**1**	SCREW	VIS VITE	SCHRAUBE TORNILLO
24	3640628M1		**3**	SCREW	VIS VITE	SCHRAUBE TORNILLO
25	364125X1	26	**2**	CLAMP	COLLIER FASCETTA	HALTESCHELLE ABRAZADERA
26	4223764M91		**1**	HOSE	DURITE TUBO FLESSIBILE	SCHLAUCH FLEXIBLE

1-ZH13-007-B

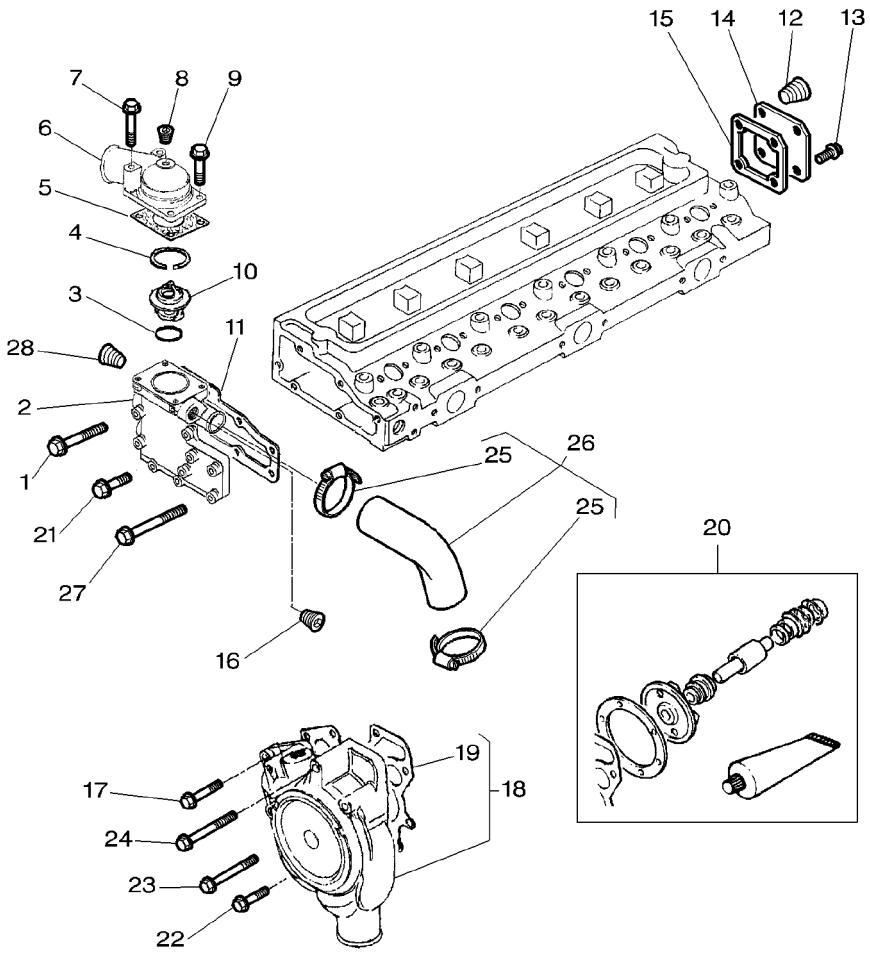

27	3637095M1	**3**	SCREW	VIS VITE	SCHRAUBE TORNILLO
28	1476192X1	**1**	PLUG	BOUCHON TAPPO	VERSCHL.STOPFEN TAPON

Water Pump, Thermostat And Heat Exchanger
Pompe A Eau Et Thermostat
Wasserpumpe, Thermostat Und Waermetauscher
Pompa Acqua, Termostato E Scambiatore Di Calore
Bomba Del Agua, Termostato Cambiador De Temperatura

10-135

M.F 8220
M.F 8220
M.F 8220
M.F 8220
M.F 8220

1-ZH13-008-B

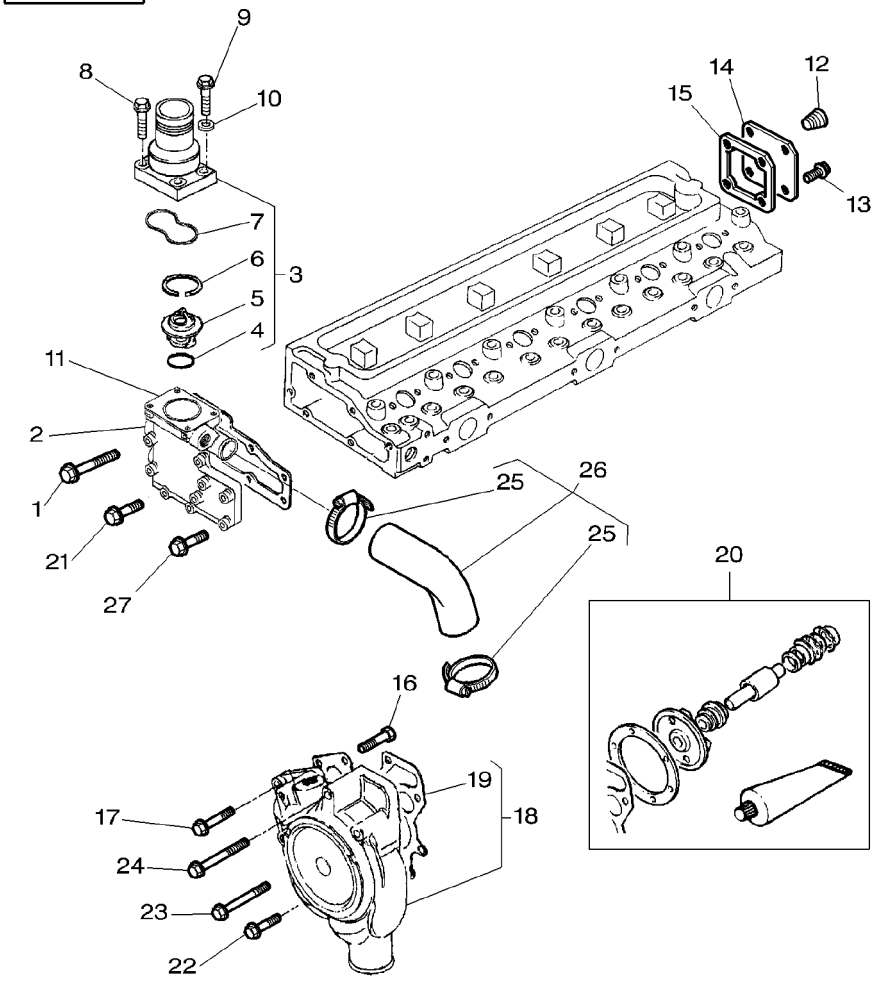

1	3637048M1		**5**	SCREW	VIS VITE	SCHRAUBE TORNILLO
2	4223771M1		**1**	HOUSING	CARTER CARCASSA	GEHAEUSE ALOJAMIENTO
3	4222153M1		**1**	CONNECTION	CONNEXION CONNESSIONE	VERBINDUNG CONEXION
4	4222848M1	3	**1**	O RING	JOINT TORIQUE ANELLO OR	O-RING JUNTA TORICA
5	4223770M1	3	**1**	THERMOSTAT	THERMOSTAT TERMOSTATO	THERMOSTAT TERMOSTATO
6	4223841M1	3	**1**	RING	ANNEAU ANELLO	RING ARO
7	4223842M1	3	**2**	O RING	JOINT TORIQUE ANELLO OR	O-RING JUNTA TORICA
8	3637011M1		**2**	SCREW	VIS VITE	SCHRAUBE TORNILLO
9	3637095M1		**2**	SCREW	VIS VITE	SCHRAUBE TORNILLO
10	4223968M1		**1**	SPACER	ENTRETOISE DISTANZIALE	ABSTANDSTUECK PIEZA DISTANCIA
11	4223763M1		**1**	GASKET	JOINT GUARNIZIONE	DICHTSCHEIBE EMPAQUETADURA.
12	376606X1		**1**	PLUG	BOUCHON TAPPO	VERSCHL.STOPFEN TAPON
13	3637044M1		**3**	SCREW	VIS VITE	SCHRAUBE TORNILLO
14	4222842M1		**1**	COVER	COUVERCLE COPERCHIO	DECKEL CUBIERTA
15	4222155M1		**1**	JOINT	JOINT PLAT GIUNTO	DICHTUNG JUNTA
16	4222836M1		**2**	SCREW	VIS VITE	SCHRAUBE TORNILLO
17	3637199M1		**1**	SCREW	VIS VITE	SCHRAUBE TORNILLO
18	4223908M91		**1**	WATER PUMP	POMPE A EAU POMPA ACQUA	WASSERPUMPE BOMBA DE AGUA
19	4222849M1	18	**1**	GASKET	JOINT GUARNIZIONE	DICHTSCHEIBE EMPAQUETADURA.
20	4222841M91		**X**	KIT, REPAIR	JEU REPARATION KIT RIPARAZIONE	REPARATURSATZ JUEGO REPARACION
21	3637046M1		**1**	SCREW	VIS VITE	SCHRAUBE TORNILLO
22	4223102M1		**1**	SCREW	VIS VITE	SCHRAUBE TORNILLO
23	3638435M1		**3**	SCREW	VIS VITE	SCHRAUBE TORNILLO
24	3640628M1		**3**	SCREW	VIS VITE	SCHRAUBE TORNILLO
25	364125X1	26	**2**	CLAMP	COLLIER FASCETTA	HALTESCHELLE ABRAZADERA
26	4223764M91		**1**	HOSE	DURITE TUBO FLESSIBILE	SCHLAUCH FLEXIBLE

1-ZH13-008-B

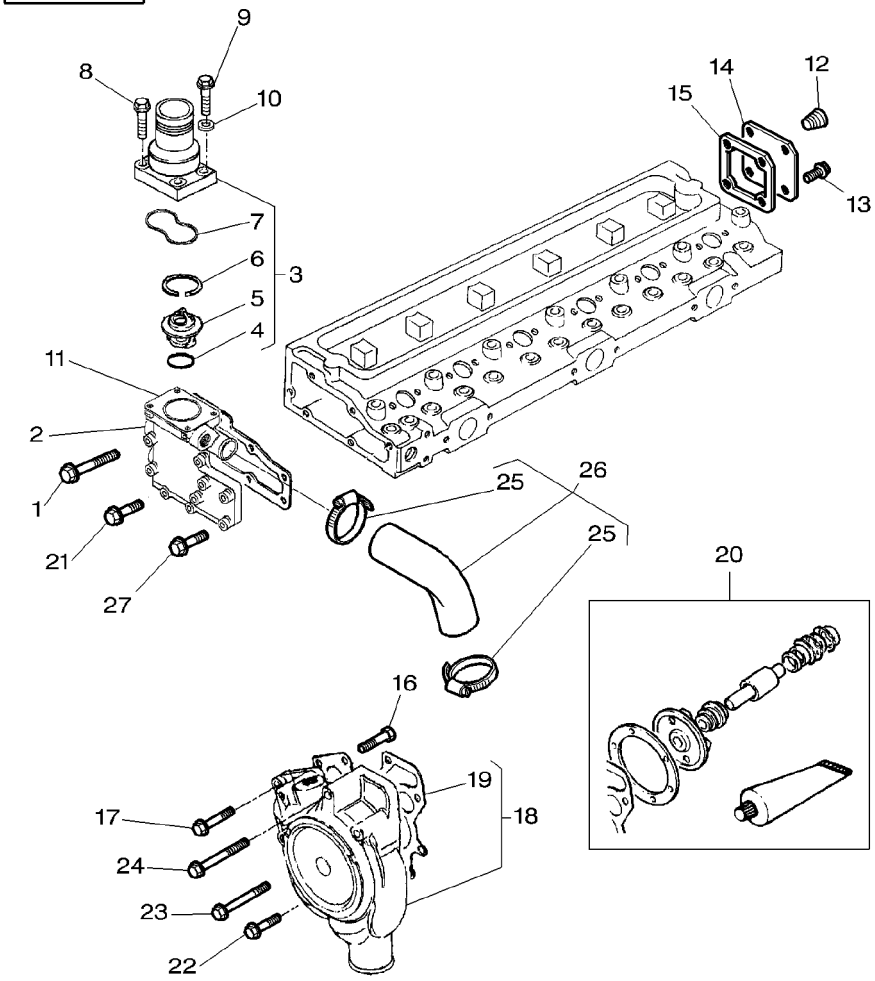

27	3637046M1	**1** SCREW	VIS VITE	SCHRAUBE TORNILLO

Low Pressure Fuel System
Circuit Carburant Basse Pression
Kraftstoff−Niederdruckanlage
Sistema Nafta A Bassa Pressione
Sistema De Combustible A Baja Presion

10-140

M.F 8210
M.F 8210
M.F 8210
M.F 8210
M.F 8210

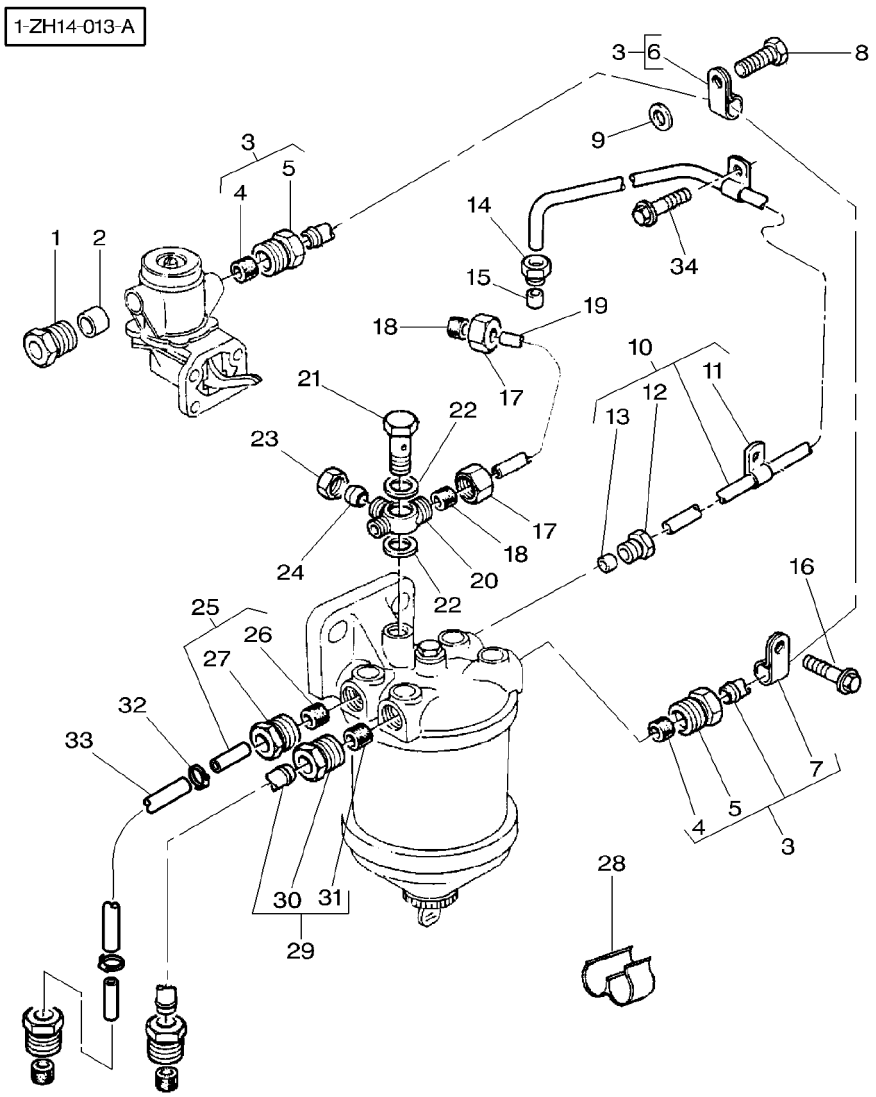

1	3637224M1		1	NUT	ECROU DADO	MUTTER TUERCA
2	731563M1		1	SLEEVE	MANCHON MANICOTTO	HUELSE MANCHA
3	4222213M1		1	PIPE,FUEL	TUYAU, CARBURANT TUBO NAFTA.	DIESELLEITUNG MANGUITO GASOIL
4	376526X1	3	2	OLIVE	OLIVE OLIVA	SCHNEIDRING OLIVA
5	3637224M1	3	2	NUT	ECROU DADO	MUTTER TUERCA
6	747679M1	3	1	STRAP	PATTE CORREGGIA	LASCHE FAJA
7	747680M1	3	1	CLIP	CLIP FERMAGLIO	SCHELLE CRAPA RETEN
8	3637008M1		1	SCREW	VIS VITE	SCHRAUBE TORNILLO
9	735111M1		1	SPACER	ENTRETOISE DISTANZIALE	ABSTANDSTUECK PIEZA DISTANCIA
10	4223769M91		1	PIPE,FUEL	TUYAU, CARBURANT TUBO NAFTA.	DIESELLEITUNG MANGUITO GASOIL
11	747673M1	10	2	STRAP	PATTE CORREGGIA	LASCHE FAJA
12	3638444M1	10	1	NUT	ECROU DADO	MUTTER TUERCA
13	3638445M1	10	1	OLIVE	OLIVE OLIVA	SCHNEIDRING OLIVA
14	376521X1		1	UNION NUT	ECROU RACCORD DADO D'UNIONE	ANSCHLUSSMUTTER TUERCA UNION
15	***376524X1***		1	OLIVE	OLIVE OLIVA	SCHNEIDRING OLIVA
16	3637102M1		1	SCREW	VIS VITE	SCHRAUBE TORNILLO
17	376521X1		2	UNION NUT	ECROU RACCORD DADO D'UNIONE	ANSCHLUSSMUTTER TUERCA UNION
18	***376524X1***		1	OLIVE	OLIVE OLIVA	SCHNEIDRING OLIVA
19	4222306M91		1	FUEL PIPE	TUYAU CARBURANT TUBO NAFTA	KRAFTST.LEITUNG TUBO COMBUSTIBLE
20	4222171M1		1	CONNECTION	CONNEXION CONNESSIONE	VERBINDUNG CONEXION
21	731352M1		1	BOLT	BOULON BULLONE	MASCH.SCHRAUBE PERNO
22	1650388M1		2	WASHER	RONDELLE RONDELLA	UNTERLEGSCHEIBE ARANDELA
23	375750X1		1	NUT	ECROU DADO	MUTTER TUERCA
24	375751X1		1	OLIVE	OLIVE OLIVA	SCHNEIDRING OLIVA
25	4223884M91		2	PIPE	CANALISATION TUBO	ROHRLEITUNG CANO
26	376526X1	25	1	OLIVE	OLIVE OLIVA	SCHNEIDRING OLIVA

1-ZH14-013-A

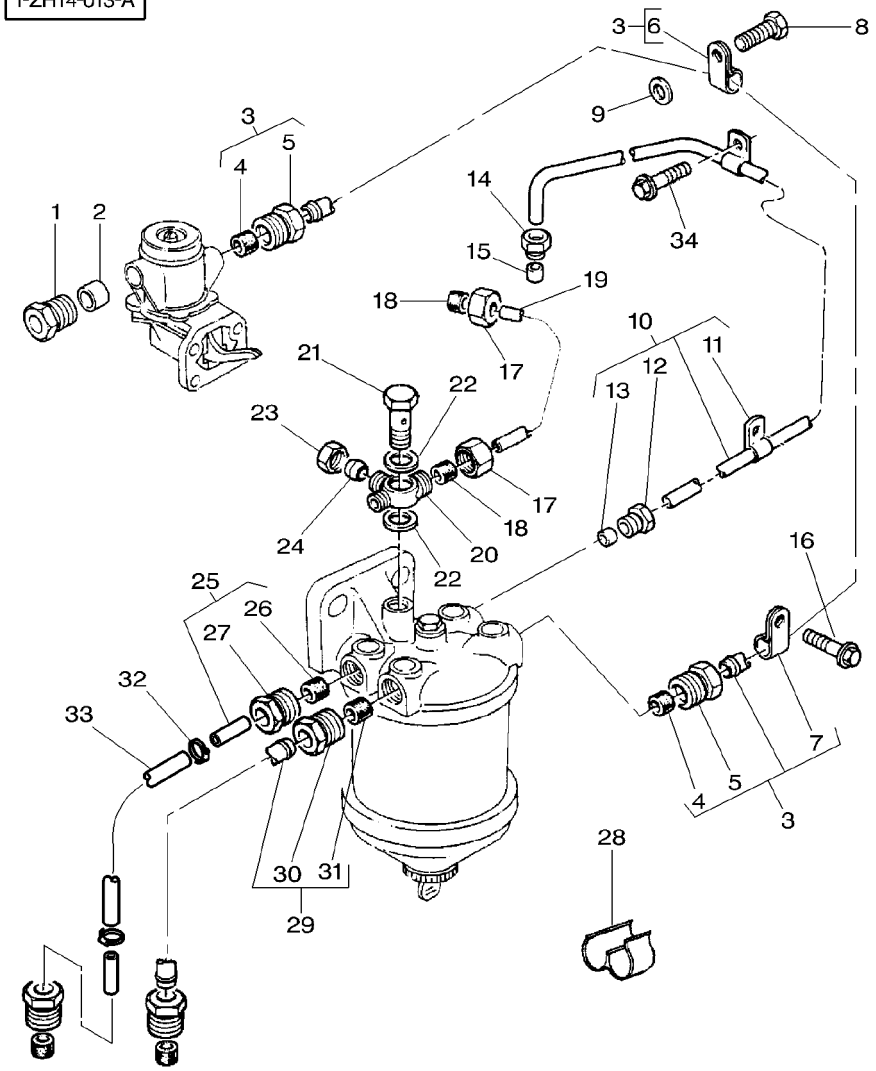

27	3637224M1	25		**1**	NUT	ECROU DADO
28	4222217M1			**1**	STRAP	PATTE CORREGGIA
29	4223731M91			**1**	FUEL PIPE	TUYAU CARBURANT TUBO NAFTA
30	3637224M1	29		**2**	NUT	ECROU DADO
31	376526X1	29		**2**	OLIVE	OLIVE OLIVA
32	4223886M1			**2**	CLIP	CLIP FERMAGLIO
33	4223885M1	◄►	450MM	**1**	HOSE	DURITE TUBO FLESSIBILE
34	3637139M1			**2**	SCREW	VIS VITE

				MUTTER TUERCA
				LASCHE FAJA
				KRAFTST.LEITUNG TUBO COMBUSTIBLE
				MUTTER TUERCA
				SCHNEIDRING OLIVA
				SCHELLE CRAPA RETEN
				SCHLAUCH FLEXIBLE
				SCHRAUBE TORNILLO

Low Pressure Fuel System
Circuit Carburant Basse Pression
Kraftstoff−Niederdruckanlage
Sistema Nafta A Bassa Pressione
Sistema De Combustible A Baja Presion

10-145

M.F 8220
M.F 8220
M.F 8220
M.F 8220
M.F 8220

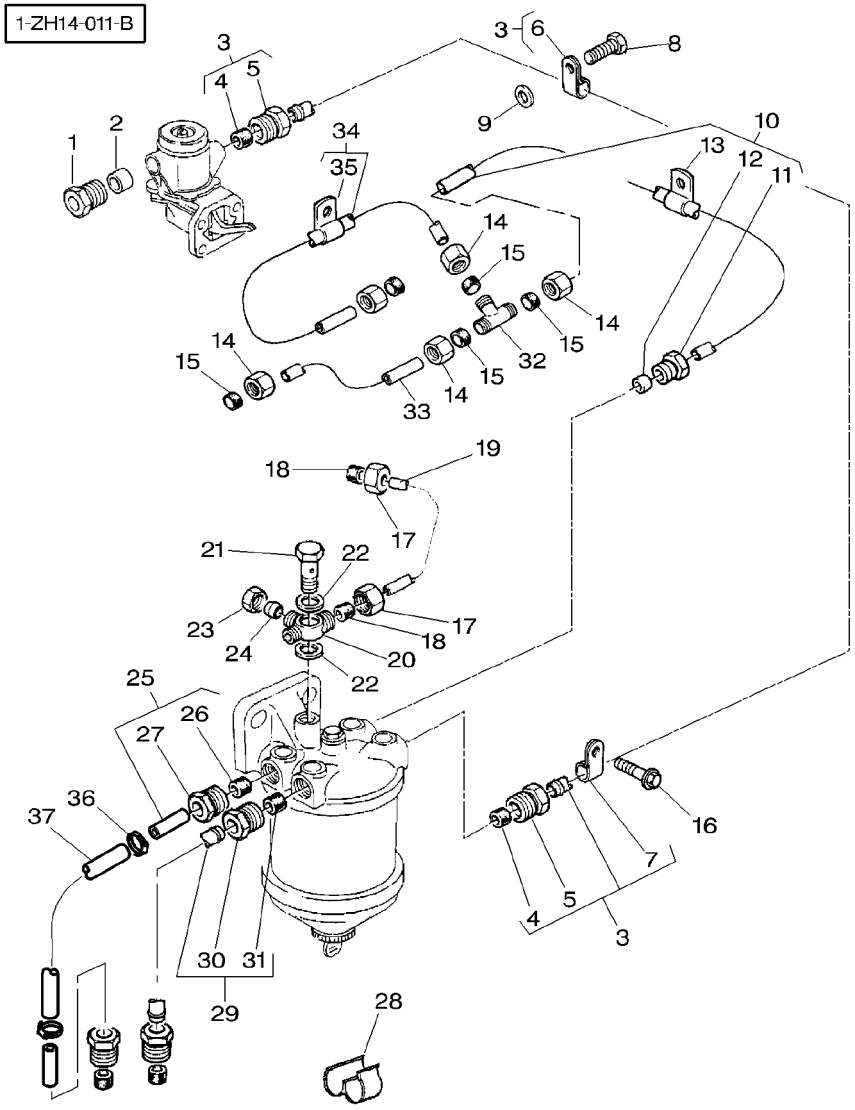

1	3637224M1		1	NUT	ECROU DADO	MUTTER TUERCA
2	731563M1		1	SLEEVE	MANCHON MANICOTTO	HUELSE MANCHA
3	4222213M1		1	PIPE,FUEL	TUYAU, CARBURANT TUBO NAFTA.	DIESELLEITUNG MANGUITO GASOIL
4	376526X1	3	2	OLIVE	OLIVE OLIVA	SCHNEIDRING OLIVA
5	3637224M1	3	2	NUT	ECROU DADO	MUTTER TUERCA
6	747679M1	3	1	STRAP	PATTE CORREGGIA	LASCHE FAJA
7	747680M1	3	1	CLIP	CLIP FERMAGLIO	SCHELLE CRAPA RETEN
8	3637008M1		1	SCREW	VIS VITE	SCHRAUBE TORNILLO
9	735111M1		1	SPACER	ENTRETOISE DISTANZIALE	ABSTANDSTUECK PIEZA DISTANCIA
10	4222260M1		1	FUEL PIPE	TUYAU CARBURANT TUBO NAFTA	KRAFTST.LEITUNG TUBO COMBUSTIBLE
11	3638444M1	10	1	NUT	ECROU DADO	MUTTER TUERCA
12	3638445M1	10	1	OLIVE	OLIVE OLIVA	SCHNEIDRING OLIVA
13	3637171M1	10	1	CLIP	CLIP FERMAGLIO	SCHELLE CRAPA RETEN
14	376521X1		5	UNION NUT	ECROU RACCORD DADO D'UNIONE	ANSCHLUSSMUTTER TUERCA UNION
15	***376524X1***		5	OLIVE	OLIVE OLIVA	SCHNEIDRING OLIVA
16	3637102M1		1	SCREW	VIS VITE	SCHRAUBE TORNILLO
17	376521X1		2	UNION NUT	ECROU RACCORD DADO D'UNIONE	ANSCHLUSSMUTTER TUERCA UNION
18	***376524X1***		1	OLIVE	OLIVE OLIVA	SCHNEIDRING OLIVA
19	4222306M91		1	FUEL PIPE	TUYAU CARBURANT TUBO NAFTA	KRAFTST.LEITUNG TUBO COMBUSTIBLE
20	4222171M1		1	CONNECTION	CONNEXION CONNESSIONE	VERBINDUNG CONEXION
21	731352M1		1	BOLT	BOULON BULLONE	MASCH.SCHRAUBE PERNO
22	1650388M1		2	WASHER	RONDELLE RONDELLA	UNTERLEGSCHEIBE ARANDELA
23	375750X1		1	NUT	ECROU DADO	MUTTER TUERCA
24	375751X1		1	OLIVE	OLIVE OLIVA	SCHNEIDRING OLIVA
25	4223884M91		2	PIPE	CANALISATION TUBO	ROHRLEITUNG CANO
26	376526X1	25	1	OLIVE	OLIVE OLIVA	SCHNEIDRING OLIVA

1-ZH14-011-B

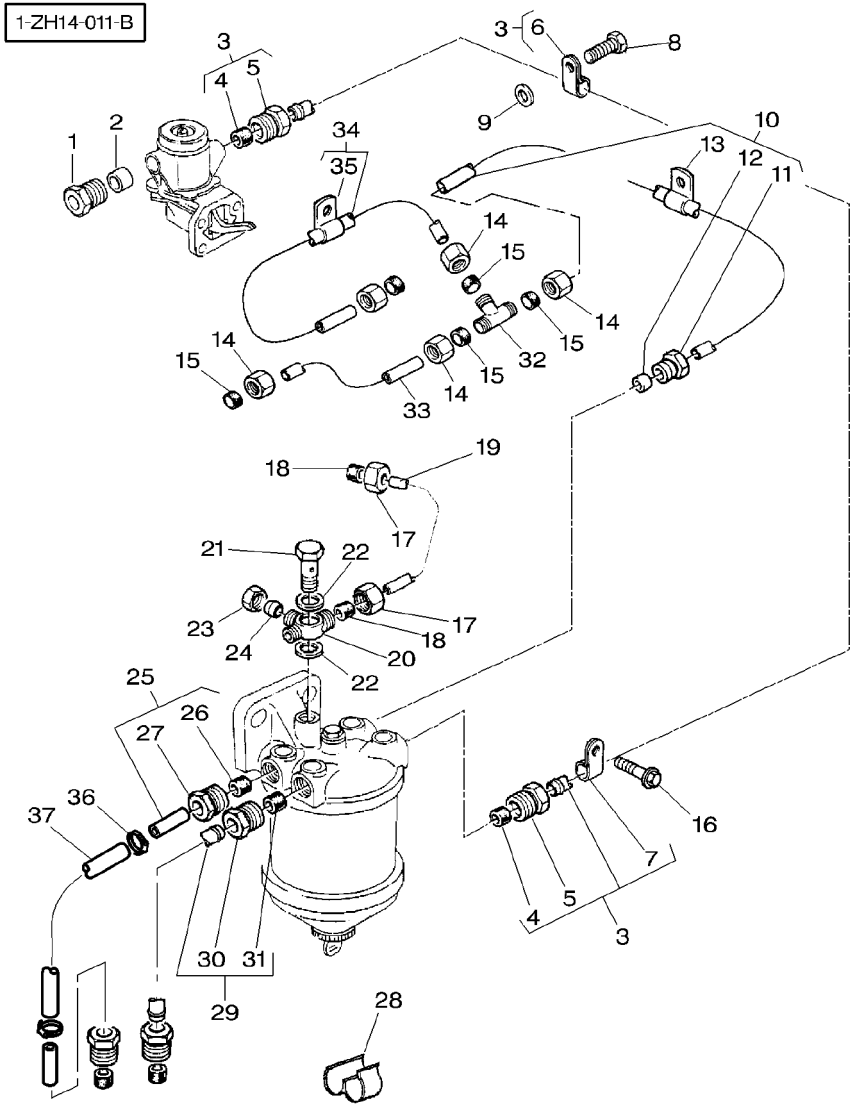

27	3637224M1	25	**1**	NUT	ECROU DADO	MUTTER TUERCA
28	4222217M1		**1**	STRAP	PATTE CORREGGIA	LASCHE FAJA
29	4223731M91		**1**	FUEL PIPE	TUYAU CARBURANT TUBO NAFTA	KRAFTST.LEITUNG TUBO COMBUSTIBLE
30	3637224M1	29	**2**	NUT	ECROU DADO	MUTTER TUERCA
31	376526X1	29	**2**	OLIVE	OLIVE OLIVA	SCHNEIDRING OLIVA
32	737734M1		**1**	TEEPIECE	TE RACCORDO A T	T−STUECK PIEZA EN T
33	4222262M1		**1**	FUEL PIPE	TUYAU CARBURANT TUBO NAFTA	KRAFTST.LEITUNG TUBO COMBUSTIBLE
34	4222261M1		**1**	FUEL PIPE	TUYAU CARBURANT TUBO NAFTA	KRAFTST.LEITUNG TUBO COMBUSTIBLE
35	3637171M1	34	**1**	CLIP	CLIP FERMAGLIO	SCHELLE CRAPA RETEN
36	4223886M1		**2**	CLIP	CLIP FERMAGLIO	SCHELLE CRAPA RETEN
37	4223885M1	◄► 450MM	**1**	HOSE	DURITE TUBO FLESSIBILE	SCHLAUCH FLEXIBLE

1-ZH14-006-A

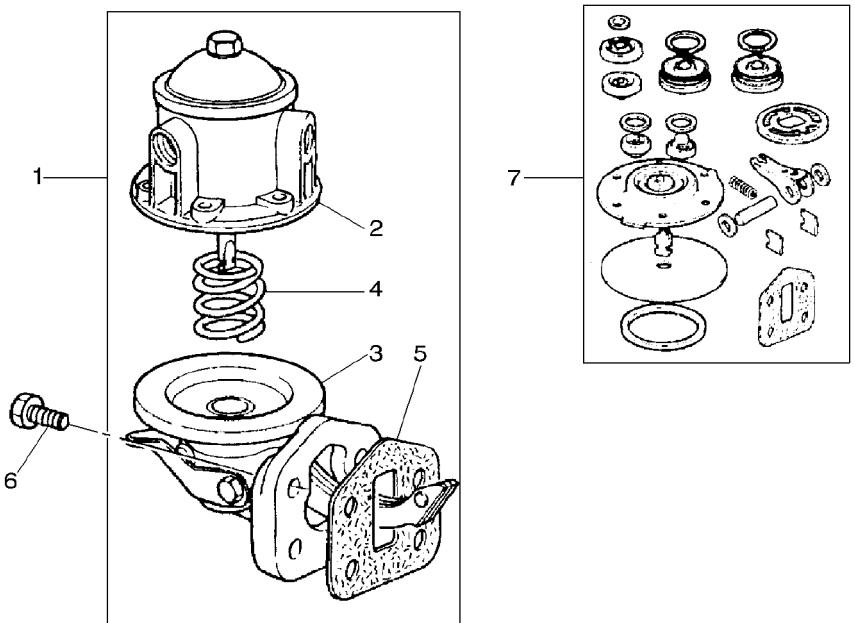

1	4222105M91		**1**	FUEL PUMP	POMPE CARBURANT POMPA NAFTA	KRAFTSTOFFPUMPE BOMBA GAS−OIL
2		1 REF NO 1	**1**	COVER	COUVERCLE COPERCHIO	DECKEL CUBIERTA
3		1 REF NO 1	**1**	BODY	CORPS CORPO	KOERPER CUERPO
4		1 REF NO 1	**1**	SPRING	RESSORT MOLLA	FEDER MUELLE
5	3641401M1	1	**1**	GASKET	JOINT GUARNIZIONE	DICHTSCHEIBE EMPAQUETADURA.
6	3637102M1		**4**	SCREW	VIS VITE	SCHRAUBE TORNILLO
7	4222219M91		**1**	KIT, REPAIR	JEU REPARATION KIT RIPARAZIONE	REPARATURSATZ JUEGO REPARACION

1-ZH14-005-A

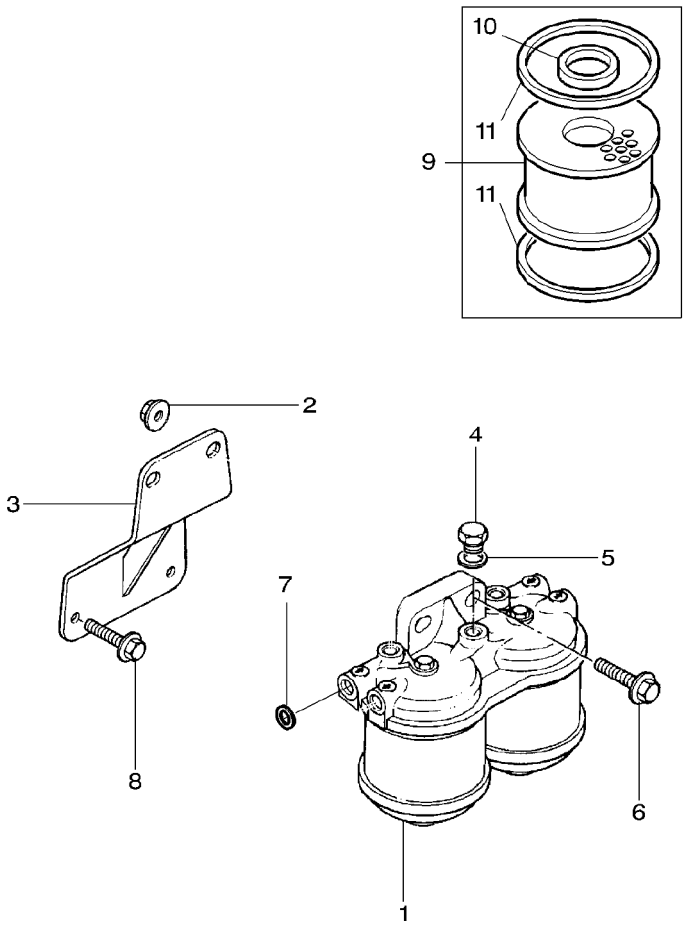

1	3637217M91		**1**	FUEL FILTER	FILTRE CARBURANT FILTRO NAFTA	KRAFTSTOFFILTER FILTRO GAS OIL
2	3637221M1		**2**	NUT	ECROU DADO	MUTTER TUERCA
3	3637219M1		**1**	BRACKET	SUPPORT FIXATION SUPPORTO FISSAGG	HALTEARM SOPORTE
4	1446894M1		**1**	PLUG	BOUCHON TAPPO	VERSCHL.STOPFEN TAPON
5	194626M1		**3**	WASHER	RONDELLE RONDELLA	UNTERLEGSCHEIBE ARANDELA
6	3640340M1		**2**	SCREW	VIS VITE	SCHRAUBE TORNILLO
7	194626M1		**2**	WASHER	RONDELLE RONDELLA	UNTERLEGSCHEIBE ARANDELA
8	3637139M1		**2**	SCREW	VIS VITE	SCHRAUBE TORNILLO
9	***836218M91***	1	**1**	FUEL ELEMENT	ELEMENTCARBURANT ELEM.CARBURANTE	FILTEREINSATZ. ELEMENTO GASOLEO
10	831461M1	9	**1**	O RING	JOINT TORIQUE ANELLO OR	O−RING JUNTA TORICA
11	1851891M1	9	**2**	GASKET	JOINT GUARNIZIONE	DICHTSCHEIBE EMPAQUETADURA.

1-ZH15-002-A

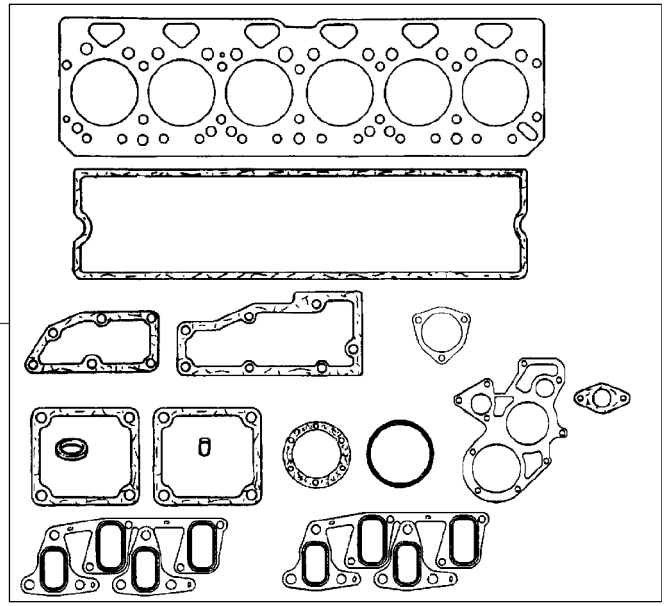

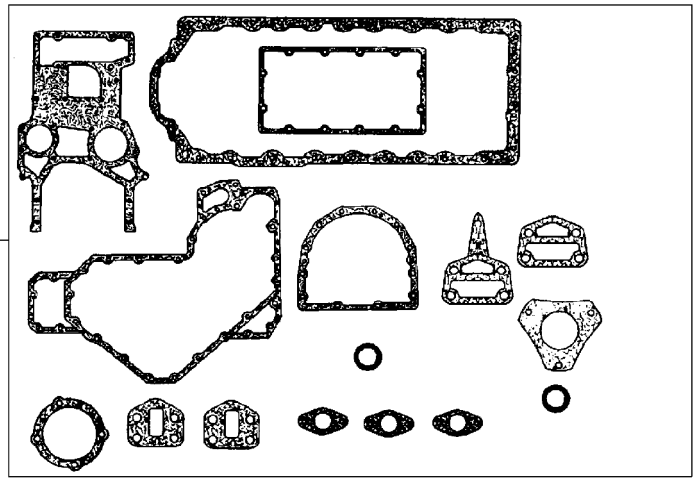

1	***4223732M91***	[A]	**1** KIT,JOINT/GASKET	JEU DE JOINTS KIT GUARN/GIUNTO	DICHTUNGS−SATZ JGO.JUNTAS/EMPAQ
2	4223733M91	[B]	**1** KIT,JOINT/GASKET	JEU DE JOINTS KIT GUARN/GIUNTO	DICHTUNGS−SATZ JGO.JUNTAS/EMPAQ

[A] JOINTS AND GASKETS−TOP SERVICE KIT
JEU DE JOINTS−REVISION PARTIE HAUTE
DICHSATZ−ZYLINDERKOPFMONTAGE
GRUPPO RIPARAZIONE GUARNIZIONE (SURERIORE)
JUNTAS Y EMPAQUETADURAS−JUEGO DE SERVICIO DE CULATA

[B] JOINTS AND GASKETS−BOTTOM SERVICE KIT
JEU DE JOINTS−REVISION PARTIE BASSE
DICHSATZ−ZYLINDERBLOCKMONTAGE
GRUPPO RIPARAZIONE GUARNIZIONE (INFERIORE)
JUNTAS Y EMPAQUETADURAS−JUEGO DE SERVICIO DEL BLOQUE

Heater Engine Block
Rechauffeur Bloc Moteur
Heizung Motor
Riscaldatore Motore
Calentador Motor

10-165

1-ZC38-005-A

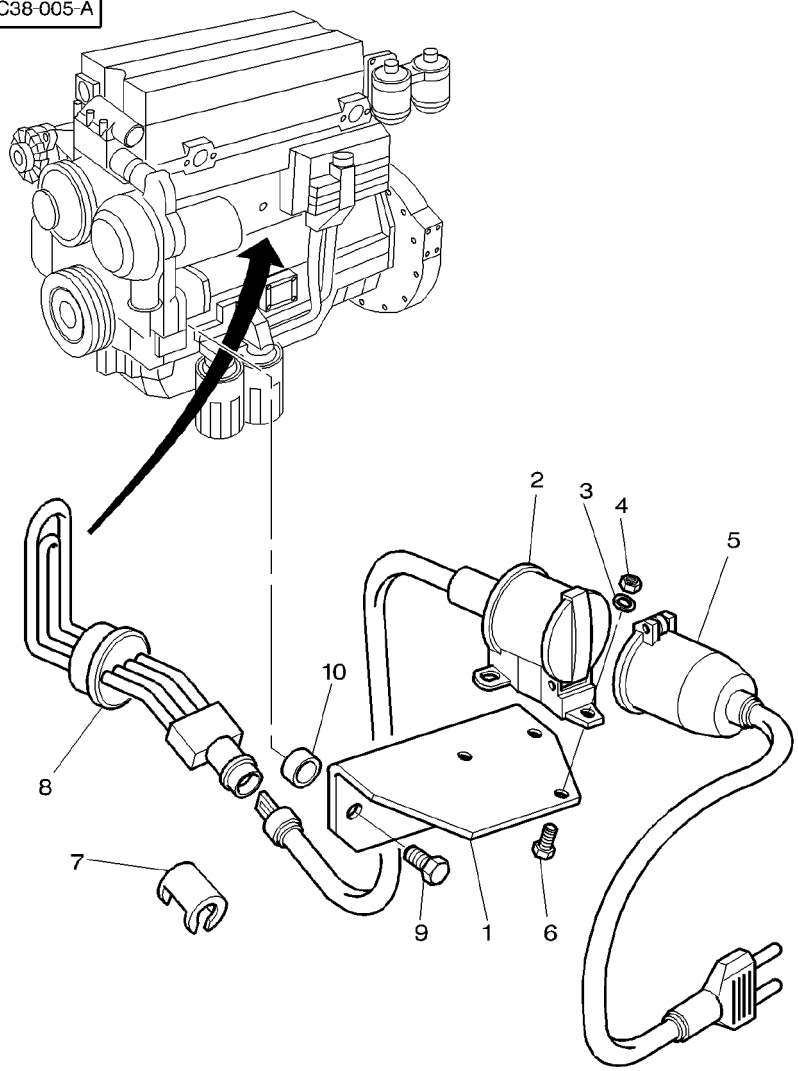

1	3783253M1	⇨ 3616275m1	**1**	SUPPORT	SUPPORT SUPPORTO	LAGERUNG DISPOS.DE SOSTEN
2	3611972M1	◂▸ 560MM	**1**	LEAD	CABLE ELECTRIQUE PIOMBO	LEITUNG CONDUCTOR METAL
3	3006154X1		**3**	WASHER	RONDELLE RONDELLA	UNTERLEGSCHEIBE ARANDELA
4	1443615X1	M4	**3**	NUT METRIC	ECROU METRIQUE DADO METRICO	MUTTER METRISCH TUERCA METRICO
5	3611973M1	◂▸ 2500MM	**1**	LEAD	CABLE ELECTRIQUE PIOMBO	LEITUNG CONDUCTOR METAL
6	3009531X1	M4X12	**3**	SCREW METRIC	VIS METRIQUE VITE METRICA	SCHRAUBE METR TORNILLO METRICO
7	3611974M1		**1**	CLIP	CLIP FERMAGLIO	SCHELLE CRAPA RETEN
8	3619931M1		**1**	HEATER	CHAUFFAGE RISCALDATORE	HEIZUNG CALENTADOR
9	3009494X1	M10X35	**2**	SCREW METRIC	VIS METRIQUE VITE METRICA	SCHRAUBE METR TORNILLO METRICO
10	3384183M2	∅ 10-16X16	**1**	BUSH	BAGUE BOCCOLA	BUCHSE CASQUILLO
10	3712546M1	∅ 10-20X12	**1**	SPACER	ENTRETOISE DISTANZIALE	ABSTANDSTUECK PIEZA DISTANCIA

Battery And Cables
Batterie Et Cables
Battery And Kabel
Batteria A Cavo
Battery Y Cable

10-170

Without Battery Cut-Off W/O Positive Connection
Sans Coupe Batterie Sans Borne Positive
Ohne Unterbrecher Ohne Doppel Nippel
Sin Ruttore Sin Morsetto
Senza Ruptor Senza Conector

1-ZC16-012-C

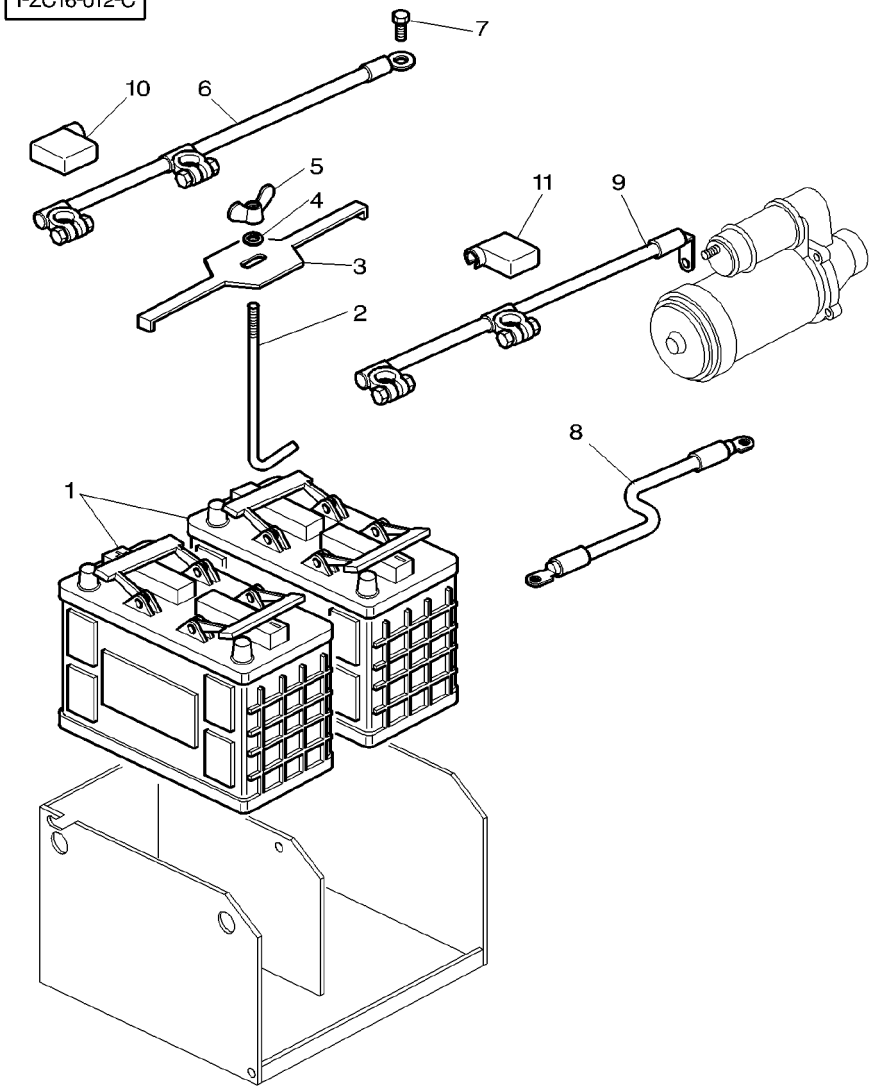

1		[A] 420 AMP.	**2**	BATTERY	BATTERIE BATTERIA	BATTERIE BATERIA
2	3782448M2		**1**	STRAP	PATTE CORREGGIA	LASCHE FAJA
3	3781110M2		**1**	BRIDLE	BRIDE BRIGLIA	SPANNBAND BRIDA
4	390972X1		**2**	WASHER METRIC	RONDELLE METR. RONDELLA METRICO	SCHEIBE METRISCH ARANDELA METRICO
5	339106X1		**1**	WING NUT	ECROU A AILETTES GALLETTO	FLUEGELMUTTER TUERCA PALOMETA
6	3781198M3	◀▶ 860MM – ➡| H280008	**1**	CABLE	CABLE CAVO	KABEL CABLE
6	3782436M2	◀▶ 1650MM – ➡▶ H280009	**1**	BATTERY CABLE	CABLE BATTERIE CAVO DE BATTERIA	BATTERIE KABEL CABLE DE BATERIA
7	3808841M1	M10X35 ➡|	**1**	BOLT	BOULON BULLONE	MASCH.SCHRAUBE PERNO
7	390738X1	M12X16 ➡▶	**1**	BOLT METRIC	BOULON METRIQUE BULLONE METRICO	MASCH.SCHRB MET PERNO METRICO
8	3782435M2	◀▶ 750MM	**1**	CABLE	CABLE CAVO	KABEL CABLE
9	3782428M2	◀▶ 1450MM +	**1**	BATTERY CABLE	CABLE BATTERIE CAVO DE BATTERIA	BATTERIE KABEL CABLE DE BATERIA
10	3782138M2		**1**	PROTECTOR	PROTECTEUR PROTETTORE	SCHUTZ PROTECTOR
11	3782139M2		**1**	PROTECTOR	PROTECTEUR PROTETTORE	SCHUTZ PROTECTOR

[A] PLEASE REFER TO MARKETING CATALOG
CONSULTER LE CATALOGUE MARKETING
SIEHEN DIE MARKETING LISTE
RIFERIRSI AL LISTA MARKETING
VEASE LA LISTA MARKETING

Battery And Cables
Batterie Et Cables
Battery And Kabel
Batteria A Cavo
Battery Y Cable

10-175

Without Battery Cut-Off With Positive Connection
Sans Coupe Batterie Avec Borne Positive
Ohne Unterbrecher Mit Doppelnippel
Sin Ruttore Con Morsetto
Senza Ruptor Con Conector

1-ZC16-011-C

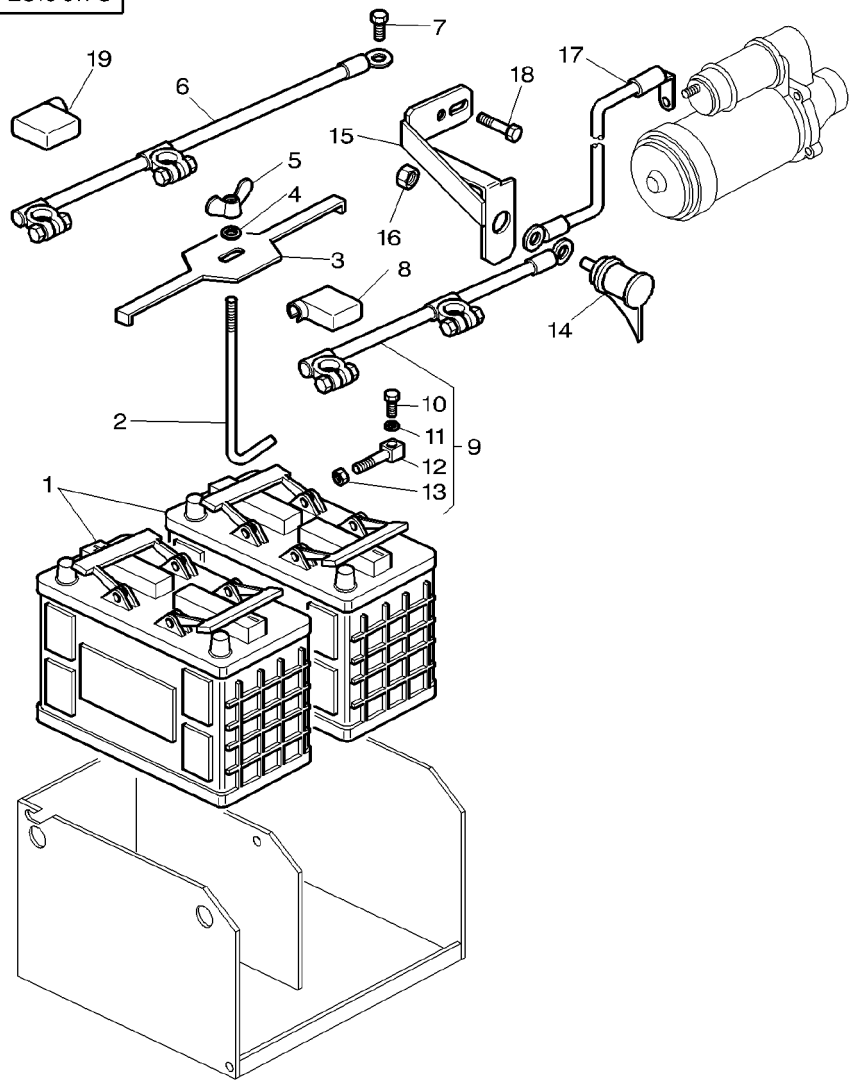

1		[A] 420 AMP.	**2**	BATTERY	BATTERIE BATTERIA	BATTERIE BATERIA
2	3782448M2		**1**	STRAP	PATTE CORREGGIA	LASCHE FAJA
3	3781110M2		**1**	BRIDLE	BRIDE BRIGLIA	SPANNBAND BRIDA
4	390972X1		**2**	WASHER METRIC	RONDELLE METR. RONDELLA METRICO	SCHEIBE METRISCH ARANDELA METRICO
5	339106X1		**1**	WING NUT	ECROU A AILETTES GALLETTO	FLUEGELMUTTER TUERCA PALOMETA
6	3781198M3	◀▶ 860MM – ➡	H280008	**1**	CABLE	CABLE CAVO	KABEL CABLE
6	3782436M2	◀▶ 1650MM – ➡ H280009	**1**	BATTERY CABLE	CABLE BATTERIE CAVO DE BATTERIA	BATTERIE KABEL CABLE DE BATERIA
7	3808841M1		**1**	BOLT	BOULON BULLONE	MASCH.SCHRAUBE PERNO
8	3782139M2		**1**	PROTECTOR	PROTECTEUR PROTETTORE	SCHUTZ PROTECTOR
9	3782429M1	◀▶ 1920MM +	**1**	BATTERY CABLE	CABLE BATTERIE CAVO DE BATTERIA	BATTERIE KABEL CABLE DE BATERIA
10	3010859X1	9	**1**	SCREW	VIS VITE	SCHRAUBE TORNILLO
11	3010860X1	9	**1**	WASHER	RONDELLE RONDELLA	UNTERLEGSCHEIBE ARANDELA
12	3781143M1	9	**1**	SCREW	VIS VITE	SCHRAUBE TORNILLO
13	339169X1	9 M8	**1**	NUT METRIC	ECROU METRIQUE DADO METRICO	MUTTER METRISCH TUERCA METRICO
14	3714454M1		**1**	CONNECTOR	BORNE MORSETTO	DOPPELNIPPEL CONECTOR
15	3781283M1		**1**	SUPPORT	SUPPORT SUPPORTO	LAGERUNG DISPOS.DE SOSTEN
16	355566X1	14	**1**	NUT UNC	ECROU UNC DADO UNC	MUTTER UNC TUERCA UNC
17	3616128M2	◀▶ 450MM	**1**	CABLE	CABLE CAVO	KABEL CABLE
18	339761X1	M8X25	**1**	SCREW METRIC	VIS METRIQUE VITE METRICA	SCHRAUBE METR TORNILLO METRICO
19	3782138M2		**1**	PROTECTOR	PROTECTEUR PROTETTORE	SCHUTZ PROTECTOR

[A] PLEASE REFER TO MARKETING CATALOG
CONSULTER LE CATALOGUE MARKETING
SIEHEN DIE MARKETING LISTE
RIFERIRSI AL LISTA MARKETING
VEASE LA LISTA MARKETING

Battery And Cables
Batterie Et Cables
Battery And Kabel
Batteria A Cavo
Battery Y Cable

10-180

With Battery Cut-Off
Avec Coupe Batterie
Mit Unterbrecher
Con Ruttore
Con Ruptor

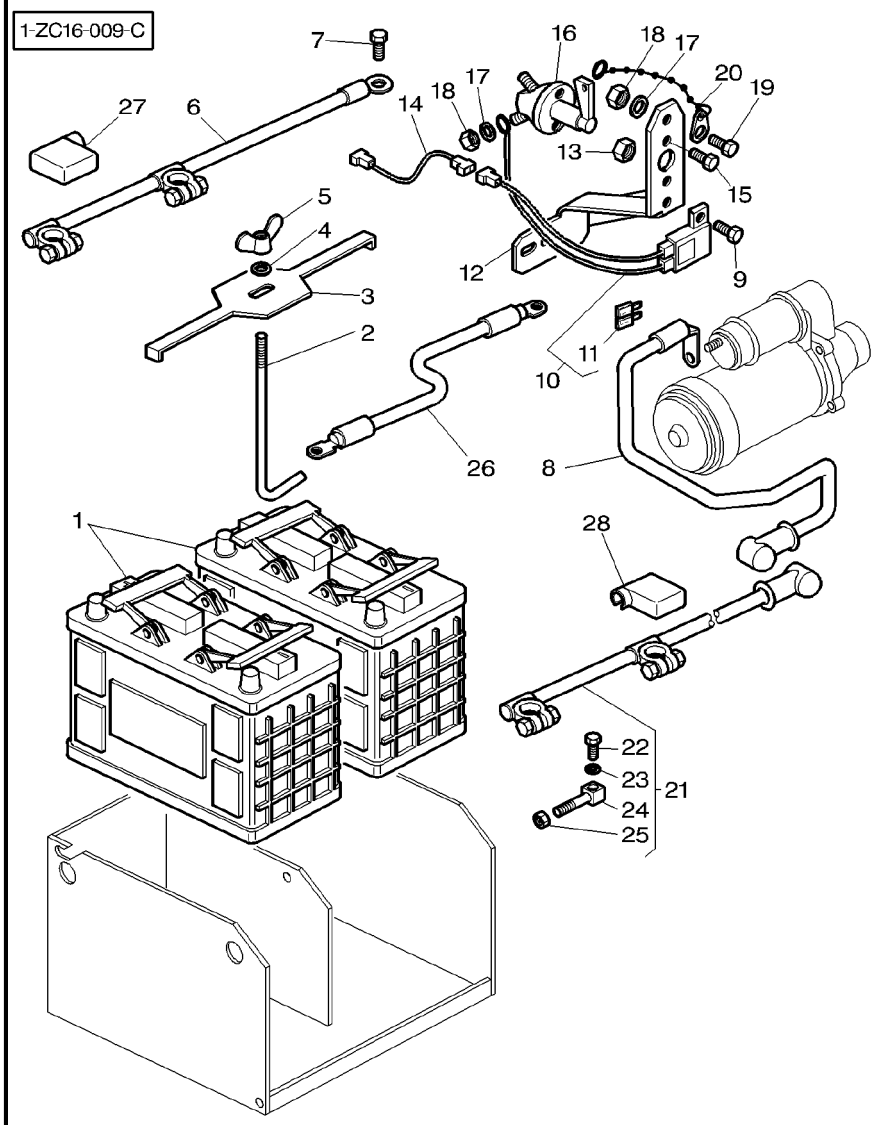

1		[A] 420 AMP.	**2**	BATTERY	BATTERIE BATTERIA	BATTERIE BATERIA
2	3782448M2		**1**	STRAP	PATTE CORREGGIA	LASCHE FAJA
3	3781110M2		**1**	BRIDLE	BRIDE BRIGLIA	SPANNBAND BRIDA
4	390972X1		**1**	WASHER METRIC	RONDELLE METR. RONDELLA METRICO	SCHEIBE METRISCH ARANDELA METRICO
5	339106X1		**1**	WING NUT	ECROU A AILETTES GALLETTO	FLUEGELMUTTER TUERCA PALOMETA
6	3781198M3	◀▶ 860MM – ➡| H280008	**1**	CABLE	CABLE CAVO	KABEL CABLE
6	3782436M2	◀▶ 1650MM – ➡| H280009	**1**	BATTERY CABLE	CABLE BATTERIE CAVO DE BATTERIA	BATTERIE KABEL CABLE DE BATERIA
7	3808841M1		**1**	BOLT	BOULON BULLONE	MASCH.SCHRAUBE PERNO
8	3777078M1	◀▶ 650MM	**1**	CABLE	CABLE CAVO	KABEL CABLE
9	390990X1	M5X12	**1**	SCREW METRIC	VIS METRIQUE VITE METRICA	SCHRAUBE METR TORNILLO METRICO
10	3616189M91		**1**	HARNESS	FAISCEAU FASCIOCAVI	KABELBAUM MAZO CABLES
11	***3387318M1***	10	**1**	FUSE	FUSIBLE FUSIBILE	SICHERUNG FUSIBLE
12	3779384M1		**1**	SUPPORT	SUPPORT SUPPORTO	LAGERUNG DISPOS.DE SOSTEN
13	3010477X1	M5	**1**	NUT METRIC	ECROU METRIQUE DADO METRICO	MUTTER METRISCH TUERCA METRICO
14	3616193M2		**1**	WIRE	FIL FILO DI FERRO	DRAHT HILO
15	339666X1	M6X20	**2**	SCREW METRIC	VIS METRIQUE VITE METRICA	SCHRAUBE METR TORNILLO METRICO
16	***3712201M1***		**1**	SWITCH	INTERRUPTEUR INTERRUTTORE	SCHALTER INTERRUPTOR
17	391038X1		**2**	WASHER METRIC	RONDELLE METR. RONDELLA METRICO	SCHEIBE METRISCH ARANDELA METRICO
18	339030X1	M6	**3**	NUT METRIC	ECROU METRIQUE DADO METRICO	MUTTER METRISCH TUERCA METRICO
19	339560X1	M6X16	**1**	SCREW METRIC	VIS METRIQUE VITE METRICA	SCHRAUBE METR TORNILLO METRICO
20	3613599M91		**1**	CHAIN	CHAINE CATENA	KETTE CADENA
21	3782162M1	◀▶ 2150MM +	**1**	CABLE	CABLE CAVO	KABEL CABLE
22	3010859X1	21	**1**	SCREW	VIS VITE	SCHRAUBE TORNILLO
23	3010860X1	21	**1**	WASHER	RONDELLE RONDELLA	UNTERLEGSCHEIBE ARANDELA
24	3781143M1	21	**1**	SCREW	VIS VITE	SCHRAUBE TORNILLO

Battery And Cables
Batterie Et Cables
Battery And Kabel
Batteria A Cavo
Battery Y Cable

10-180

With Battery Cut-Off
Avec Coupe Batterie
Mit Unterbrecher
Con Ruttore
Con Ruptor

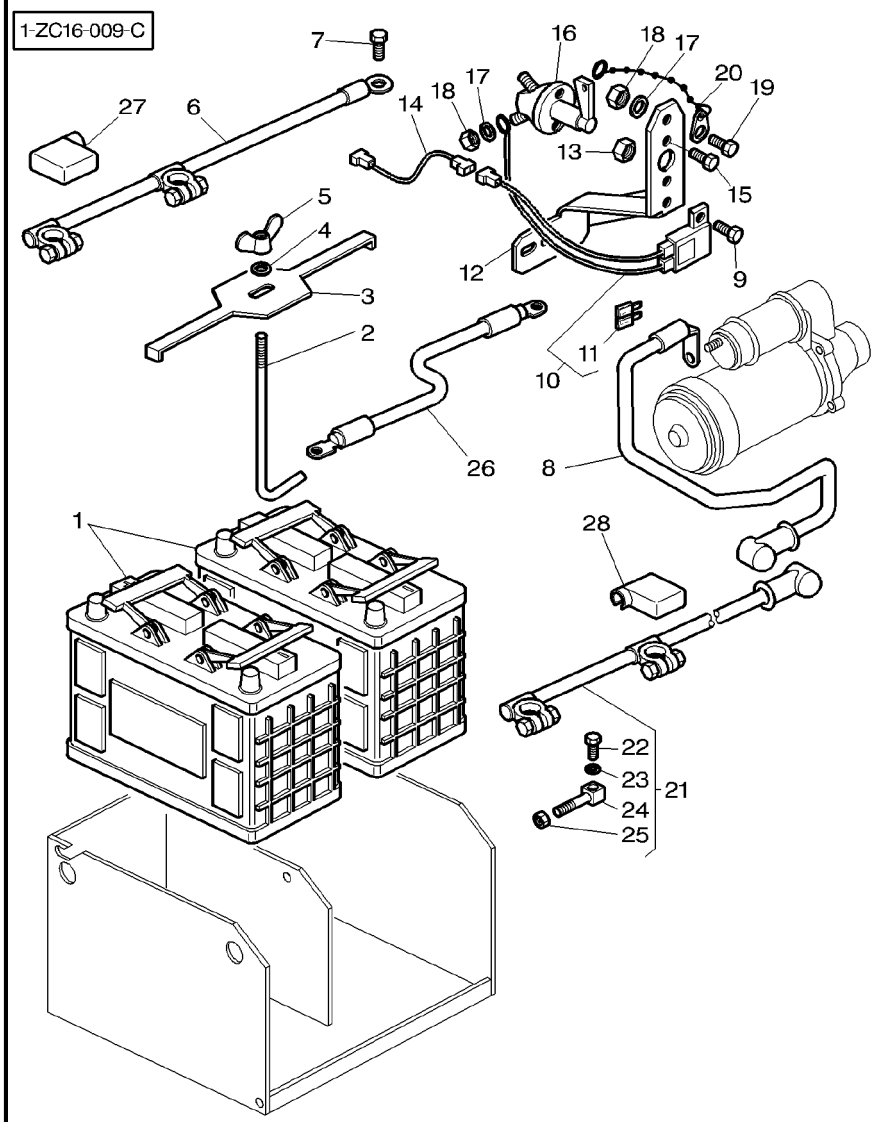

25	339169X1	21	M8	**1**	NUT METRIC	ECROU METRIQUE DADO METRICO	MUTTER METRISCH TUERCA METRICO
26	3782435M2	◀▶	750MM	**1**	CABLE	CABLE CAVO	KABEL CABLE
27	3782138M2			**1**	PROTECTOR	PROTECTEUR PROTETTORE	SCHUTZ PROTECTOR
28	3782139M2			**1**	PROTECTOR	PROTECTEUR PROTETTORE	SCHUTZ PROTECTOR

[A] PLEASE REFER TO MARKETING CATALOG
CONSULTER LE CATALOGUE MARKETING
SIEHEN DIE MARKETING LISTE
RIFERIRSI AL LISTA MARKETING
VEASE LA LISTA MARKETING

1-ZC08-004-C

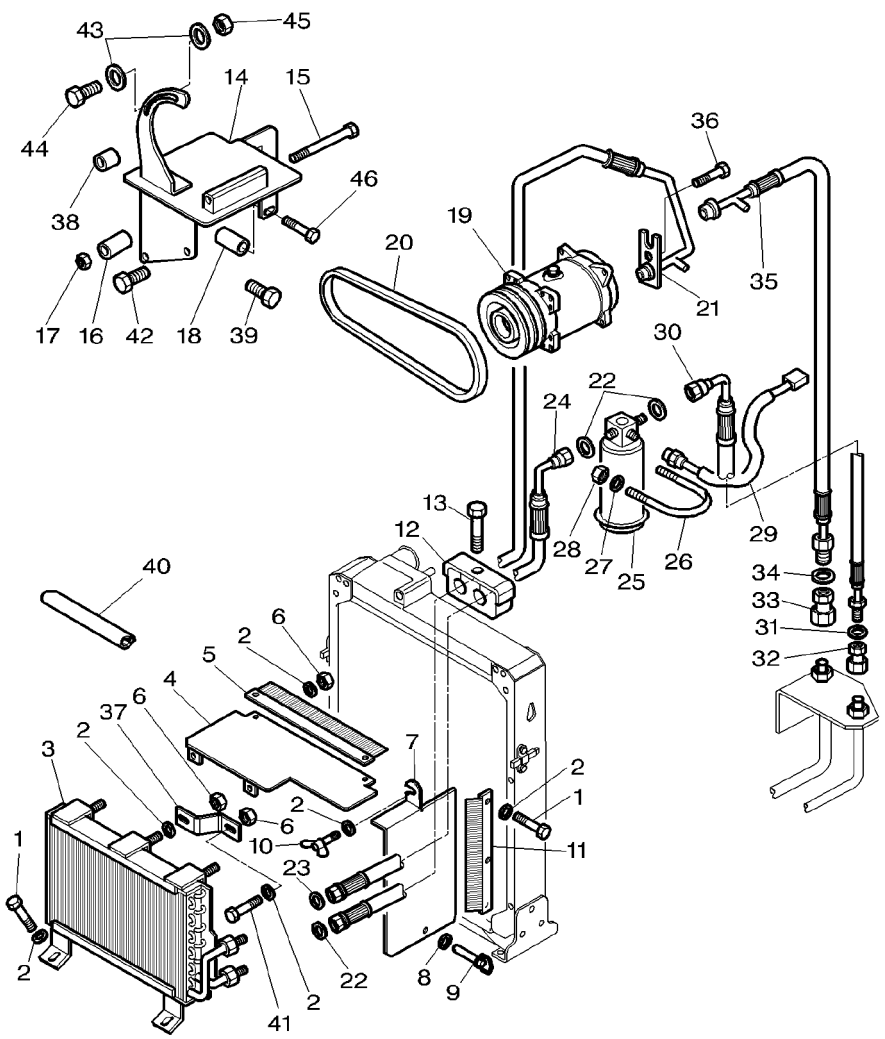

1	339124X1	M8X16	X	SCREW METRIC	VIS METRIQUE VITE METRICA	SCHRAUBE METR TORNILLO METRICO
2	390972X1		X	WASHER METRIC	RONDELLE METR. RONDELLA METRICO	SCHEIBE METRISCH ARANDELA METRICO
3	3782611M1		1	CONDENSER	CONDENSEUR CONDENSATORE*	VERDICHTER CONDENSADOR
4	3782714M1		1	PLATE	PLAQUE PIASTRA	PLATTE PLATO
5	3782717M1		1	DUST SHIELD	CACHE POUSSIERE PARAPOLVERE*	STAUBDECKEL PLACA PROTECTORA
6	339169X1	M8	3	NUT METRIC	ECROU METRIQUE DADO METRICO	MUTTER METRISCH TUERCA METRICO
7	3782712M2	◀	1	PANEL	PANNEAU PANNELLO	VERKL.BLECH PANEL
7	3782711M2	▶	1	PANEL	PANNEAU PANNELLO	VERKL.BLECH PANEL
8	3782892M1		2	WASHER	RONDELLE RONDELLA	UNTERLEGSCHEIBE ARANDELA
9	3782893M2		2	LATCH	VERROU SALISCENDI	RIEGEL CERROJO
10	339107X1	M8X16	2	WINGBOLT	VIS A AILETTES BULLONE ALETTATO	FLUEGELSCHRAUBE PERNO DE ALETAS
11	3782716M1	◀	1	DUST SHIELD	CACHE POUSSIERE PARAPOLVERE*	STAUBDECKEL PLACA PROTECTORA
11	3782715M1	▶	1	DUST SHIELD	CACHE POUSSIERE PARAPOLVERE*	STAUBDECKEL PLACA PROTECTORA
12	3781937M1		1	BRIDLE	BRIDE BRIGLIA	SPANNBAND BRIDA
13	339009X1	M8X35	1	BOLT METRIC	BOULON METRIQUE BULLONE METRICO	MASCH.SCHRB MET PERNO METRICO
14	3780592M2		1	SUPPORT	SUPPORT SUPPORTO	LAGERUNG DISPOS.DE SOSTEN
15	1442487X1	M10X130	1	BOLT METRIC	BOULON METRIQUE BULLONE METRICO	MASCH.SCHRB MET PERNO METRICO
16	3781316M1	∅ 20X9X40MM	1	SPACER	ENTRETOISE DISTANZIALE	ABSTANDSTUECK PIEZA DISTANCIA
17	1440329X1	M10	1	LOCKNUT	ECROU BLOCAGE AUTOBLOCCANTE	FLACHMUTTER CONTRATUERCA
18	3010856X1	∅ 20MM ◀▶ 55MM J193026	1	SPACER	ENTRETOISE DISTANZIALE	ABSTANDSTUECK PIEZA DISTANCIA
18	3582445M1	∅ 20MM ◀▶ 30MM J193027	1	SPACER	ENTRETOISE DISTANZIALE	ABSTANDSTUECK PIEZA DISTANCIA
19	3782613M2		1	COMPRESSOR	COMPRESSEUR COMPRESSORE	KOMPRESSOR COMPRESOR
20	***3386214M1***		1	BELT	COURROIE CINGHIA	RIEMEN CORREA
21	3782106M2		1	HYDR HOSE	FLEXIBLE TUBOFLEX IDRAUL	HYDR SCHLAUCH TUBO HIDRAULICO
22	3010471X1		3	O RING	JOINT TORIQUE ANELLO OR	O-RING JUNTA TORICA

1-ZC08-004-C

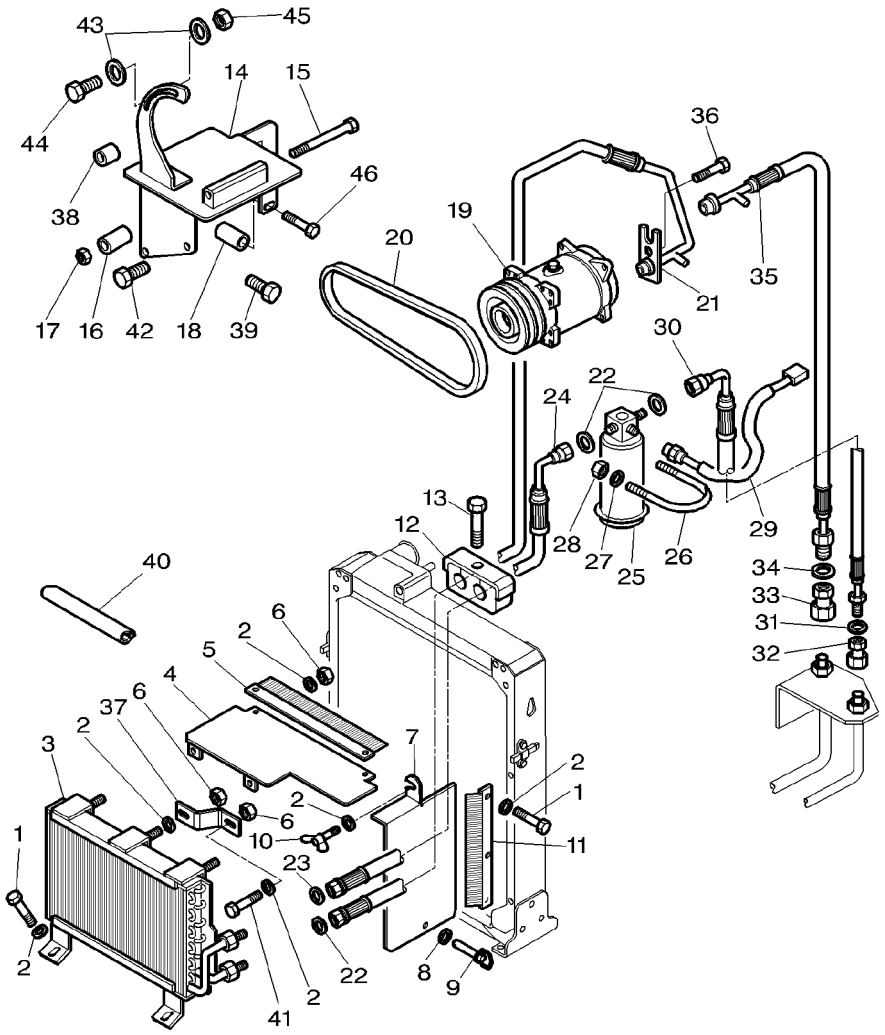

23	3010472X1		**1**	O RING	JOINT TORIQUE ANELLO OR	O–RING JUNTA TORICA
24	3782107M1		**1**	HYDR HOSE	FLEXIBLE TUBOFLEX IDRAUL	HYDR SCHLAUCH TUBO HIDRAULICO
25	***3712495M1***		**1**	FILTER	FILTRE FILTRO	FILTER FILTRO
26	3383977M1		**1**	STIRRUP	ETRIER STAFFA	BUEGEL ESTRIBO
27	390971X1		**2**	WASHER METRIC	RONDELLE METR. RONDELLA METRICO	SCHEIBE METRISCH ARANDELA METRICO
28	339030X1	M6	**2**	NUT METRIC	ECROU METRIQUE DADO METRICO	MUTTER METRISCH TUERCA METRICO
29	3712526M1		**1**	PRESSURE SWITCH	MANO CONTACT INTERRUTTORE PRE	DRUCKSCHALTER INTERRUP PRESION
30	3779607M2		**1**	HYDR HOSE	FLEXIBLE TUBOFLEX IDRAUL	HYDR SCHLAUCH TUBO HIDRAULICO
31	3010502X1		**1**	O RING	JOINT TORIQUE ANELLO OR	O–RING JUNTA TORICA
32	**368524X1**		**1**	UNION	RACCORD RACCORDO	VERSCHRAUBUNG RACOR
33	**368543X1**		**1**	UNION	RACCORD RACCORDO	VERSCHRAUBUNG RACOR
34	3010474X1		**1**	O RING	JOINT TORIQUE ANELLO OR	O–RING JUNTA TORICA
35	3777881M1	◀▶ 820MM	**1**	HYDR HOSE	FLEXIBLE TUBOFLEX IDRAUL	HYDR SCHLAUCH TUBO HIDRAULICO
36	358139X1	3/8–24 X 25	**1**	SCREW	VIS VITE	SCHRAUBE TORNILLO
37	3781063M1		**1**	STRAP	PATTE CORREGGIA	LASCHE FAJA
38	3782135M1		**2**	SPACER	ENTRETOISE DISTANZIALE	ABSTANDSTUECK PIEZA DISTANCIA
39	3019908X1	M8X105	**2**	SCREW	VIS VITE	SCHRAUBE TORNILLO
40	3778991M1	◀▶ 285MM	**1**	GASKET	JOINT GUARNIZIONE	DICHTSCHEIBE EMPAQUETADURA.
40	3778990M1	◀▶ 165MM	**1**	GASKET	JOINT GUARNIZIONE	DICHTSCHEIBE EMPAQUETADURA.
41	339123X1	M8X20	**1**	SCREW METRIC	VIS METRIQUE VITE METRICA	SCHRAUBE METR TORNILLO METRICO
42	339761X1	M8X25	**1**	SCREW METRIC	VIS METRIQUE VITE METRICA	SCHRAUBE METR TORNILLO METRICO
43	390734X1	∅ 10X21X2	**1**	WASHER METRIC	RONDELLE METR. RONDELLA METRICO	SCHEIBE METRISCH ARANDELA METRICO
44	3009494X1	M10X35	**1**	SCREW METRIC	VIS METRIQUE VITE METRICA	SCHRAUBE METR TORNILLO METRICO
45	3009693X1		**1**	NUT METRIC	ECROU METRIQUE DADO METRICO	MUTTER METRISCH TUERCA METRICO
46	3009502X1	M10X80 ➡ J193026	**1**	BOLT METRIC	BOULON METRIQUE BULLONE METRICO	MASCH.SCHRB MET PERNO METRICO
46	3009498X1	M10X55 ➡ J193027	**1**	BOLT METRIC	BOULON METRIQUE BULLONE METRICO	MASCH.SCHRB MET PERNO METRICO

Sanden Compresser
Compresseur Sanden
Sanden−Kompressor
Compressore Sanden
Compresor Sanden

10-190

1-ZC49-001-A

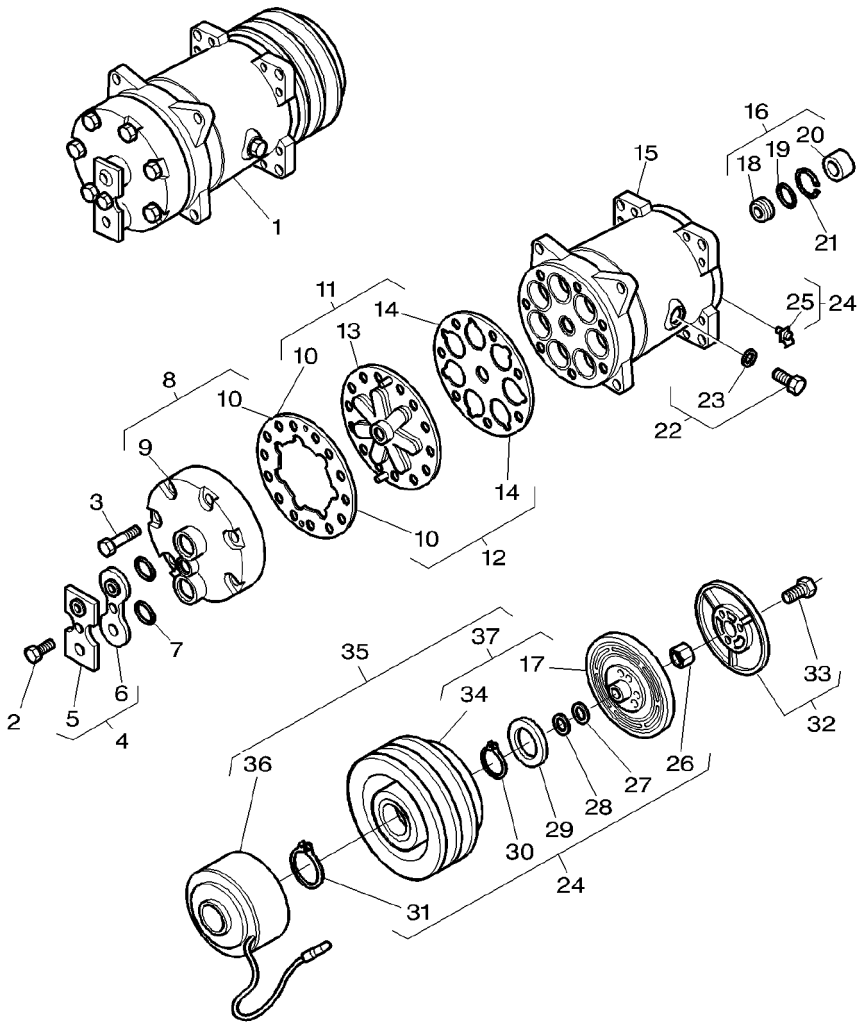

1	3782613M2		SD7H15QC8088	**1**	COMPRESSOR	COMPRESSEUR COMPRESSORE	KOMPRESSOR COMPRESOR
2	3901157M1	1		**1**	SCREW	VIS VITE	SCHRAUBE TORNILLO
3	3901154M1	1		**6**	SCREW	VIS VITE	SCHRAUBE TORNILLO
4	3903258M91	1		**1**	KIT	JEU KIT	SATZ JUEGO
5		4	REF.4	**1**	PLATE	PLAQUE PIASTRA	PLATTE PLATO
6		4	REF.4	**1**	COVER	COUVERCLE COPERCHIO	DECKEL CUBIERTA
7	3901155M1	1		**2**	O RING	JOINT TORIQUE ANELLO OR	O−RING JUNTA TORICA
8	3901147M91	1		**1**	HEAD	TETE TESTA	KOPF CULATA
9		8	REF.8	**1**	COVER	COUVERCLE COPERCHIO	DECKEL CUBIERTA
10		8	REF.8	**1**	GASKET	JOINT GUARNIZIONE	DICHTSCHEIBE EMPAQUETADURA.
11	3903255M91	1		**1**	KIT	JEU KIT	SATZ JUEGO
12	3903256M91	1		**1**	KIT, GASKET	JEU JOINTS PLATS KIT GUARNIZIONI	DICHTSCHEIB.SATZ JGO.EMPAQUETAD.
13		11	REF.11	**1**	PLATE	PLAQUE PIASTRA	PLATTE PLATO
14		11	REF.11	**1**	GASKET	JOINT GUARNIZIONE	DICHTSCHEIBE EMPAQUETADURA.
15		1	REF.1	**1**	BODY	CORPS CORPO	KOERPER CUERPO
16	3903257M91	1		**1**	KIT, SEAL	JEU ETANCHEITE KIT TENUTA	DICHTRINGSATZ RETENES JUEGO
17		37	REF.37	**1**	ARMATURE	INDUIT ARMATURA	INDUKTIONSANKER INDUCIDO
18		16	REF.16	**1**	SEAL	JOINT ETANCHEITE PARAOLIO	DICHTRING RETEN
19		16	REF.16	**1**	O RING	JOINT TORIQUE ANELLO OR	O−RING JUNTA TORICA
20		16	REF.16	**1**	FELT RING	BAGUE FEUTRE ANELLO FELTRO	FILZRING ANILLA FIELTRO
21	3901150M1	1		**1**	CIRCLIP	SEGMENT D ARRET ANELLO D'ARRESTO	SICHERUNGSRING CIRCULITO
22	3901152M91	1		**1**	PLUG	BOUCHON TAPPO	VERSCHL.STOPFEN TAPON
23	3901153M1	22		**1**	O RING	JOINT TORIQUE ANELLO OR	O−RING JUNTA TORICA
24	3903263M91	1		**1**	KIT	JEU KIT	SATZ JUEGO
25		24	REF.24	**1**	CLIP	CLIP FERMAGLIO	SCHELLE CRAPA RETEN
26		24	REF.24	**1**	NUT	ECROU DADO	MUTTER TUERCA

1-ZC49-001-A

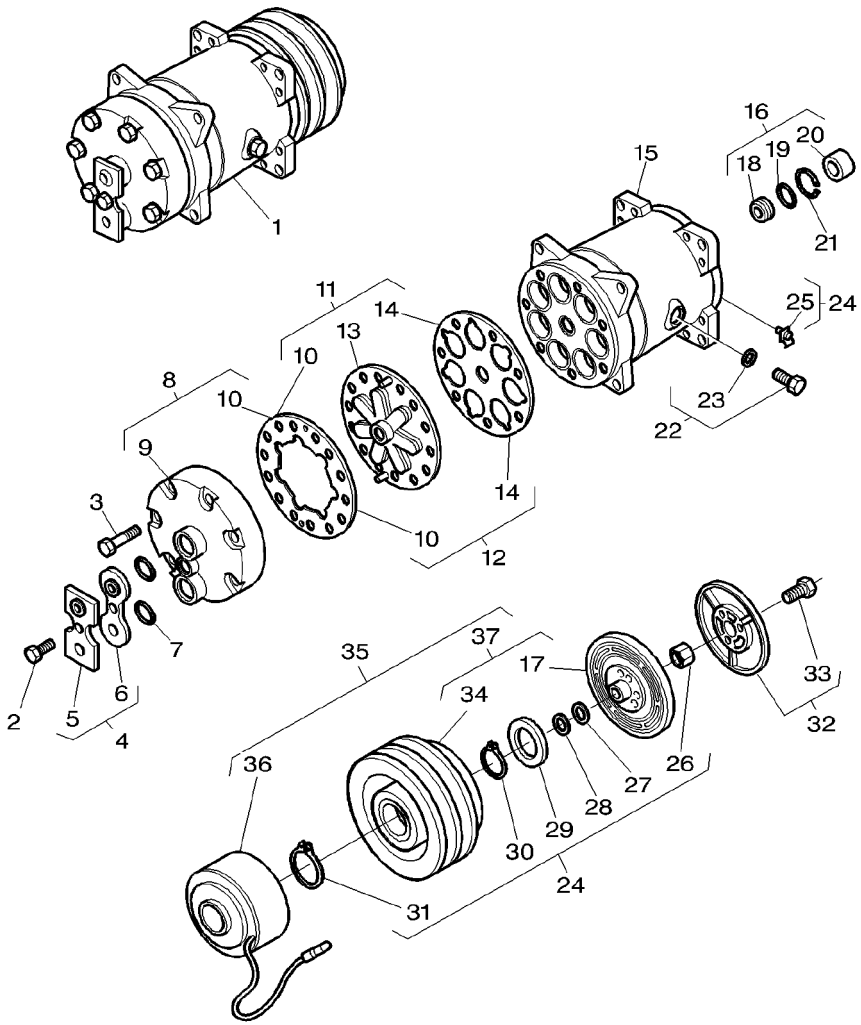

27		24	REF.24	**1** RING	ANNEAU ANELLO	RING ARO
28		24	REF.24	**1** RING	ANNEAU ANELLO	RING ARO
29	3901162M1	24		**1** COVER	COUVERCLE COPERCHIO	DECKEL CUBIERTA
30		24	REF.24	**1** CLIP	CLIP FERMAGLIO	SCHELLE CRAPA RETEN
31		24	REF.24	**1** CLIP	CLIP FERMAGLIO	SCHELLE CRAPA RETEN
32	3903259M91			**1** KIT	JEU KIT	SATZ JUEGO
33		32	REF.32	**3** SCREW	VIS VITE	SCHRAUBE TORNILLO
34		37	REF.37	**1** PULLEY	POULIE PULEGGIA	RIEMENSCHEIBE POLEA
35	3903260M92	1		**1** CLUTCH	EMBRAYAGE FRIZIONE	SCHALTKUPPLUNG EMBRAGUE
36	3903262M91	35		**1** COIL	BOBINE BOBINA	KNICKSCHUTZFEDER BOBINA
37	3903261M92	35		**1** ROTOR	ROTOR ROTORE	ROTOR ROTOR

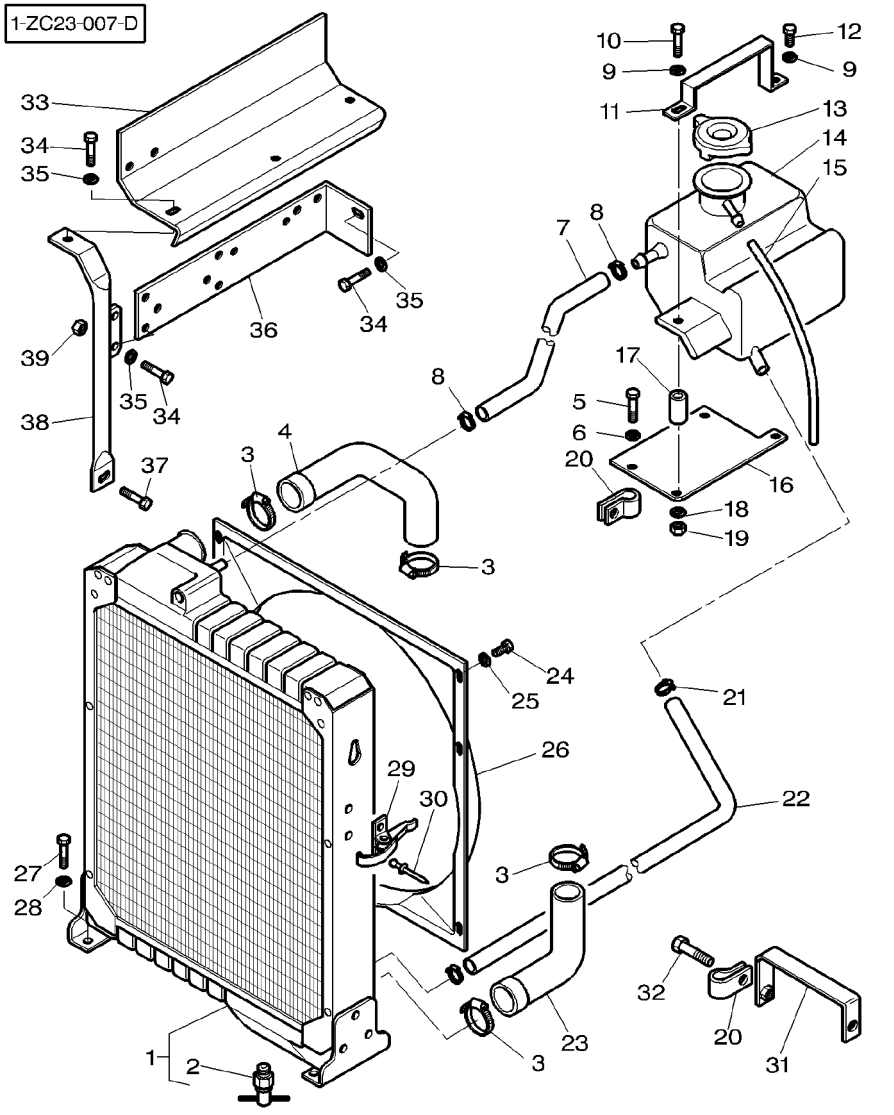

1	3780221M2	[B] MF 8220 ➡| J018006	**1**	WATER COOLER	RADIATEUR EAU RADIATORE ACQUA	WASSERKUEHLER REFRIG DE AGUA
1	3780220M2	[A] MF 8220 ➡ J018007		**1**	WATER COOLER	RADIATEUR EAU RADIATORE ACQUA	WASSERKUEHLER REFRIG DE AGUA
1	3780220M2	[A] MF 8210		**1**	WATER COOLER	RADIATEUR EAU RADIATORE ACQUA	WASSERKUEHLER REFRIG DE AGUA
2	3902881M1	1		**1**	PLUG	BOUCHON TAPPO	VERSCHL.STOPFEN TAPON
3	338618X1			**4**	HOSE CLIP	COLLIER DURITE STRINGITUBO	SCHLAUCHSCHELLE CLIP P.FLEXIBLE
4	***3780508M3***			**1**	HOSE	DURITE TUBO FLESSIBILE	SCHLAUCH FLEXIBLE
5	339337X1	M8X30		**4**	SCREW METRIC	VIS METRIQUE VITE METRICA	SCHRAUBE METR TORNILLO METRICO
6	391039X1			**4**	WASHER METRIC	RONDELLE METR. RONDELLA METRICO	SCHEIBE METRISCH ARANDELA METRICO
7	3780557M1	◀▶ 810MM		**1**	HOSE	DURITE TUBO FLESSIBILE	SCHLAUCH FLEXIBLE
8	3000483X1			**2**	CLAMP	COLLIER FASCETTA	HALTESCHELLE ABRAZADERA
9	390972X1			**2**	WASHER METRIC	RONDELLE METR. RONDELLA METRICO	SCHEIBE METRISCH ARANDELA METRICO
10	390246X1	M8X70		**1**	BOLT	BOULON BULLONE	MASCH.SCHRAUBE PERNO
11	3779400M2			**1**	BRIDLE	BRIDE BRIGLIA	SPANNBAND BRIDA
12	339337X1	M8X30		**1**	SCREW METRIC	VIS METRIQUE VITE METRICA	SCHRAUBE METR TORNILLO METRICO
13	***180224M92***			**1**	RADIATOR CAP	BOUCHONRADIATEUR TAPPO RADIATORE	KUEHLERDECKEL TAPON RADIADOR
14	3810567M3			**1**	BOTTLE	BOUTEILLE BOTTIGLIA	FLASCHE BOTELLA
15	3808186M1			**1**	HOSE	DURITE TUBO FLESSIBILE	SCHLAUCH FLEXIBLE
16	3781204M2			**1**	SUPPORT	SUPPORT SUPPORTO	LAGERUNG DISPOS.DE SOSTEN
17	3810570M1			**1**	SPACER	ENTRETOISE DISTANZIALE	ABSTANDSTUECK PIEZA DISTANCIA
18	390972X1			**2**	WASHER METRIC	RONDELLE METR. RONDELLA METRICO	SCHEIBE METRISCH ARANDELA METRICO
19	339169X1			**2**	NUT METRIC	ECROU METRIQUE DADO METRICO	MUTTER METRISCH TUERCA METRICO
20	3581424M1			**2**	CLAMP	COLLIER FASCETTA	HALTESCHELLE ABRAZADERA
21	338614X1			**2**	HOSE CLIP	COLLIER DURITE STRINGITUBO	SCHLAUCHSCHELLE CLIP P.FLEXIBLE
22	3781304M2	◀▶ 1200MM		**1**	HOSE	DURITE TUBO FLESSIBILE	SCHLAUCH FLEXIBLE
23	***3780230M1***			**1**	HOSE	DURITE TUBO FLESSIBILE	SCHLAUCH FLEXIBLE

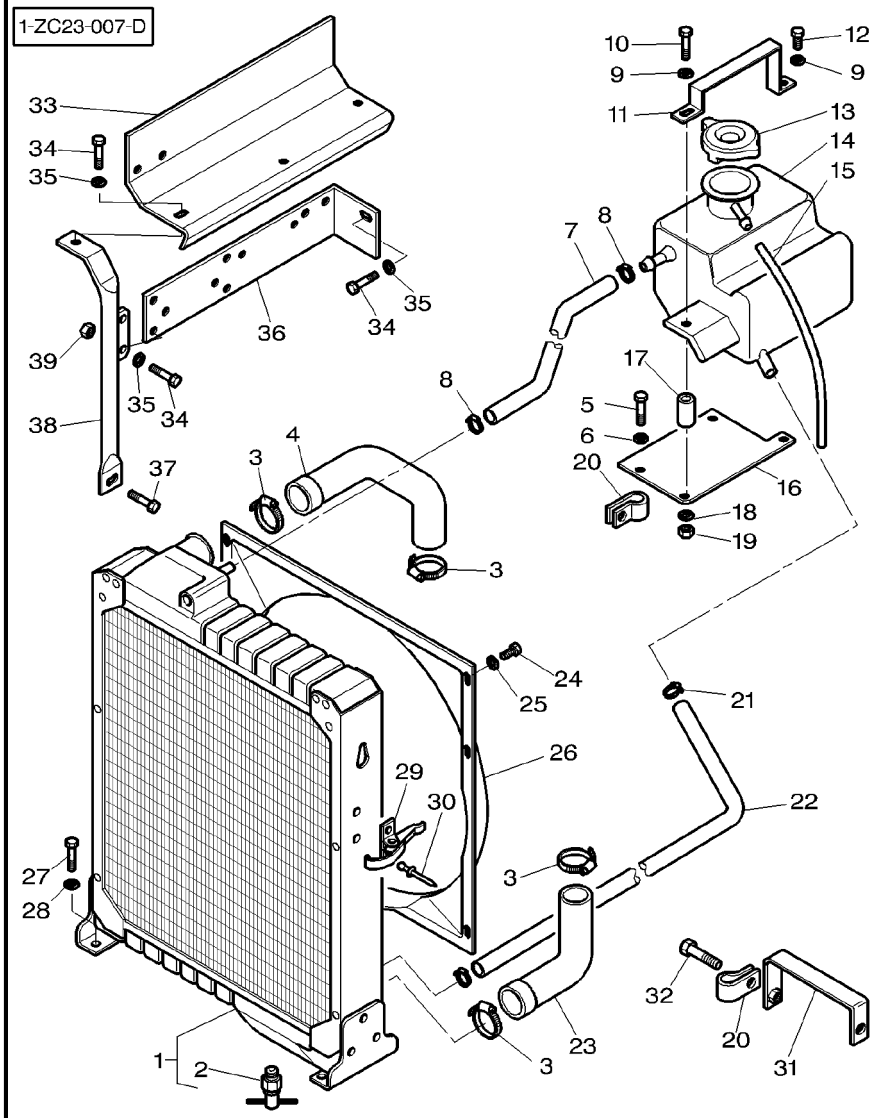

24	339228X1	M8X12	**6**	SCREW METRIC	VIS METRIQUE VITE METRICA
25	390972X1		**6**	WASHER METRIC	RONDELLE METR. RONDELLA METRICO
26	3781620M2	MF 8210	**1**	SHROUD	BUSE VELO
26	3781620M2	MF 8220 ➡| H327030	**1**	SHROUD	BUSE VELO
26	3780222M2	MF 8220 ➡ H327031	**1**	SHROUD	BUSE VELO
27	3009492X1	M10X25	**4**	SCREW METRIC	VIS METRIQUE VITE METRICA
28	390734X1		**4**	WASHER METRIC	RONDELLE METR. RONDELLA METRICO
29	3783272M1		**2**	LATCH	VERROU SALISCENDI
30	3010021X1		**4**	RIVET	RIVET RIVETTO
31	3782045M1		**1**	STRAP	PATTE CORREGGIA
32	339123X1	M8X20	**1**	SCREW METRIC	VIS METRIQUE VITE METRICA
33	3782112M2		**1**	DEFLECTOR	DEFLECTEUR DEFLETTORE
34	339123X1	M8X20	**5**	SCREW METRIC	VIS METRIQUE VITE METRICA
35	390972X1		**5**	WASHER METRIC	RONDELLE METR. RONDELLA METRICO
36	3782113M1		**1**	RAMP	RAMPE RAMPA
37	3009492X1	M10X25	**1**	SCREW METRIC	VIS METRIQUE VITE METRICA
38	3781203M1		**1**	SUPPORT	SUPPORT SUPPORTO
39	339169X1		**2**	NUT METRIC	ECROU METRIQUE DADO METRICO

[A] RADIATOR 4 ROW
RADIATEUR 4 RANGS
4 REIHEN KUELER
RADIATORE 4 LINEA
RADIATORY 4 LINEA

[B] RADIATOR 5 ROW
RADIATEUR 5 RANGS
5 REIHEN KUELER
RADIATORE 5 LINEA
RADIATORY 5 LINEA

Cab Heating System	Engine Part	10-200
Chauffage Cabine	Partie Moteur	
Kabinen−Heizungssystem	Motor Teile	
Sistema Di Riscaldamento	Parte Motore	
Sistema De Calefaccion De Cabina	Pieza De Motor	

1-ZC28-001-C

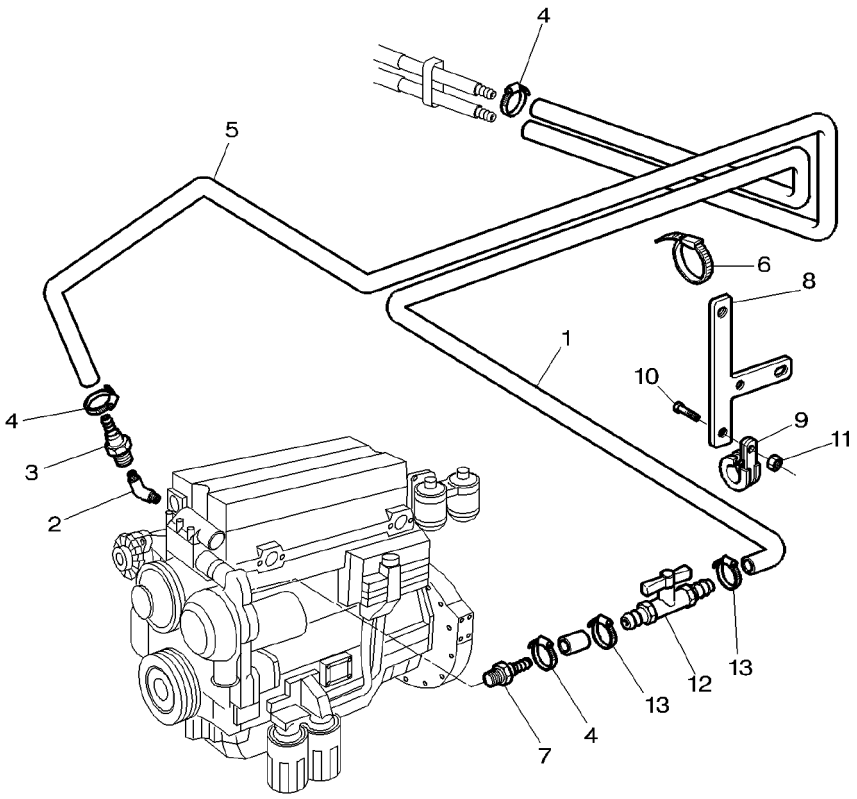

1	3779976M1	◀▶ 1500MM	**1**	HOSE	DURITE TUBO FLESSIBILE	SCHLAUCH FLEXIBLE
2	762548M1		**1**	ELBOW	COUDE GOMITO	WINKELSTUECK CODO
3	**3385676M1**		**1**	UNION	RACCORD RACCORDO	VERSCHRAUBUNG RACOR
4	3000483X1		**4**	CLAMP	COLLIER FASCETTA	HALTESCHELLE ABRAZADERA
5	3714874M1	◀▶ 2450MM	**1**	HOSE	DURITE TUBO FLESSIBILE	SCHLAUCH FLEXIBLE
6	3619622M1		**2**	CABLE TIE	ATTACHE CABLE FASCETTA CAVI	KABELBINDER ENLACE DE CABLE
7	518826M1		**1**	UNION	RACCORD RACCORDO	VERSCHRAUBUNG RACOR
8	3782355M2		**1**	ANGLE	EQUERRE ANGOLO	WINKEL ANGULO
9	3783956M1		**1**	STRAP	PATTE CORREGGIA	LASCHE FAJA
10	339761X1	M8X25	**1**	SCREW METRIC	VIS METRIQUE VITE METRICA	SCHRAUBE METR TORNILLO METRICO
11	339169X1	M8	**1**	NUT METRIC	ECROU METRIQUE DADO METRICO	MUTTER METRISCH TUERCA METRICO
12	3784680M1	(US) (AA) (ZA)	**1**	COCK	ROBINET RUBINETTO	ABSPERRHAHN AGUJA INDICADORA
13	3019564X1	(US) (AA) (ZA)	**2**	HOSE CLIP	COLLIER DURITE STRINGITUBO	SCHLAUCHSCHELLE CLIP P.FLEXIBLE

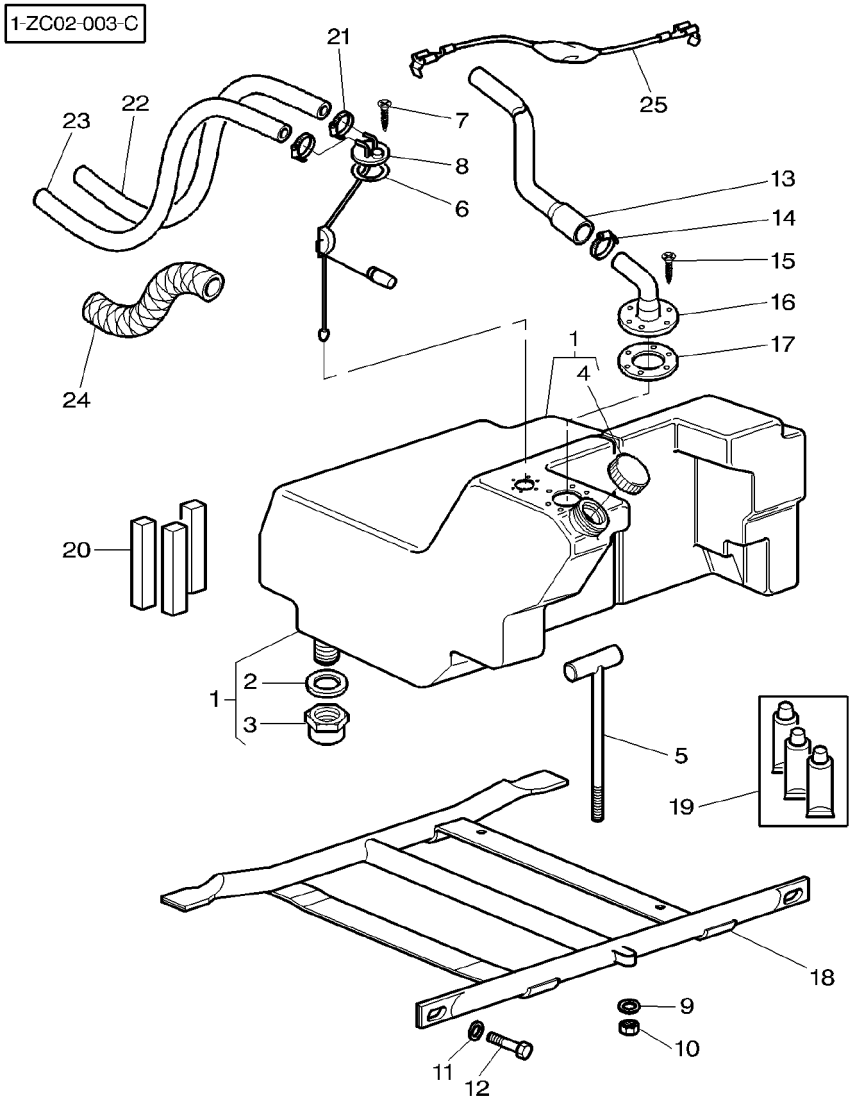

1	3782335M91	275L	**1**	TANK	RESERVOIR SERBATOIO	TANK TANQUE
1	3777384M94	[A] 275L	**1**	TANK	RESERVOIR SERBATOIO	TANK TANQUE
2	3616911M1	1	**1**	GASKET	JOINT GUARNIZIONE	DICHTSCHEIBE EMPAQUETADURA.
3	3616909M1	1	**1**	PLUG	BOUCHON TAPPO	VERSCHL.STOPFEN TAPON
4	3782340M1	1 [B]	**1**	TANK CAP	BOUCHON RESERV CUFFIA SERBATOIO	TANKVERSCHLUSS TAPA DE DEPOSITO
5	3777391M1		**1**	STEM	TIGE STELO	STIEL VASTAGO
6	1617869M2		**1**	GASKET	JOINT GUARNIZIONE	DICHTSCHEIBE EMPAQUETADURA.
7	3005728X1	No 10X16	**6**	SCREW	VIS VITE	SCHRAUBE TORNILLO
8	3782343M1		**1**	DIPSTICK	JAUGE ASTA LIVELLO	MESSTAB VARILLA ACEITE
8	3777389M2	[A]	**1**	FUEL GAUGE	JAUGE CARBURANT INDICAT.LIVELLO	KRAFTST-MESSGER INDIC.COMBUST.
9	390734X1		**1**	WASHER METRIC	RONDELLE METR. RONDELLA METRICO	SCHEIBE METRISCH ARANDELA METRICO
10	1440329X1		**1**	LOCKNUT	ECROU BLOCAGE AUTOBLOCCANTE	FLACHMUTTER CONTRATUERCA
11	385363X1		**2**	WASHER	RONDELLE RONDELLA	UNTERLEGSCHEIBE ARANDELA
12	**390912X1**		**2**	SCREW METRIC	VIS METRIQUE VITE METRICA	SCHRAUBE METR TORNILLO METRICO
13	3778733M2		**1**	TUBE	TUBE TUBO	ROHR TUBO
14	338614X1	∅ 20-32	**1**	HOSE CLIP	COLLIER DURITE STRINGITUBO	SCHLAUCHSCHELLE CLIP P.FLEXIBLE
15	3005728X1	No 10X16	**6**	SCREW	VIS VITE	SCHRAUBE TORNILLO
16	3782043M1		**1**	NON RETURN VALVE	CLAPET VALVOLA NO RITOR	RUCKSCHLAGVENTIL VALVULA DE GRANO
17	1617869M2		**1**	GASKET	JOINT GUARNIZIONE	DICHTSCHEIBE EMPAQUETADURA.
18	3778874M2		**1**	SUPPORT	SUPPORT SUPPORTO	LAGERUNG DISPOS.DE SOSTEN
19	3600444M91		**1**	KIT, SERVICE	KIT SERVICE KIT DI SERVIZIO	WARTUNGSSATZ JEUGO,SERVICE
20	3600195M91		**1**	PARTS PACK	JEU PIECES PACCO RICAMBI	SATZ TEILE PAQUETE PIEZAS
21	3712464M1		**4**	CLAMP	COLLIER FASCETTA	HALTESCHELLE ABRAZADERA
22	3386990M1	◀▶ 2900MM	**1**	HYDR HOSE	FLEXIBLE TUBOFLEX IDRAUL	HYDR SCHLAUCH TUBO HIDRAULICO
23	3777801M1	◀▶ 3040MM	**1**	HYDR HOSE	FLEXIBLE TUBOFLEX IDRAUL	HYDR SCHLAUCH TUBO HIDRAULICO
24	3580974M2	◀▶ 380MM ➡| H169012	**2**	PROTECTIVE STRIP	GAINE PROTECTION GUAINA PROTETTIV	KANTENSCHUTZ BANDA PROTECTORA

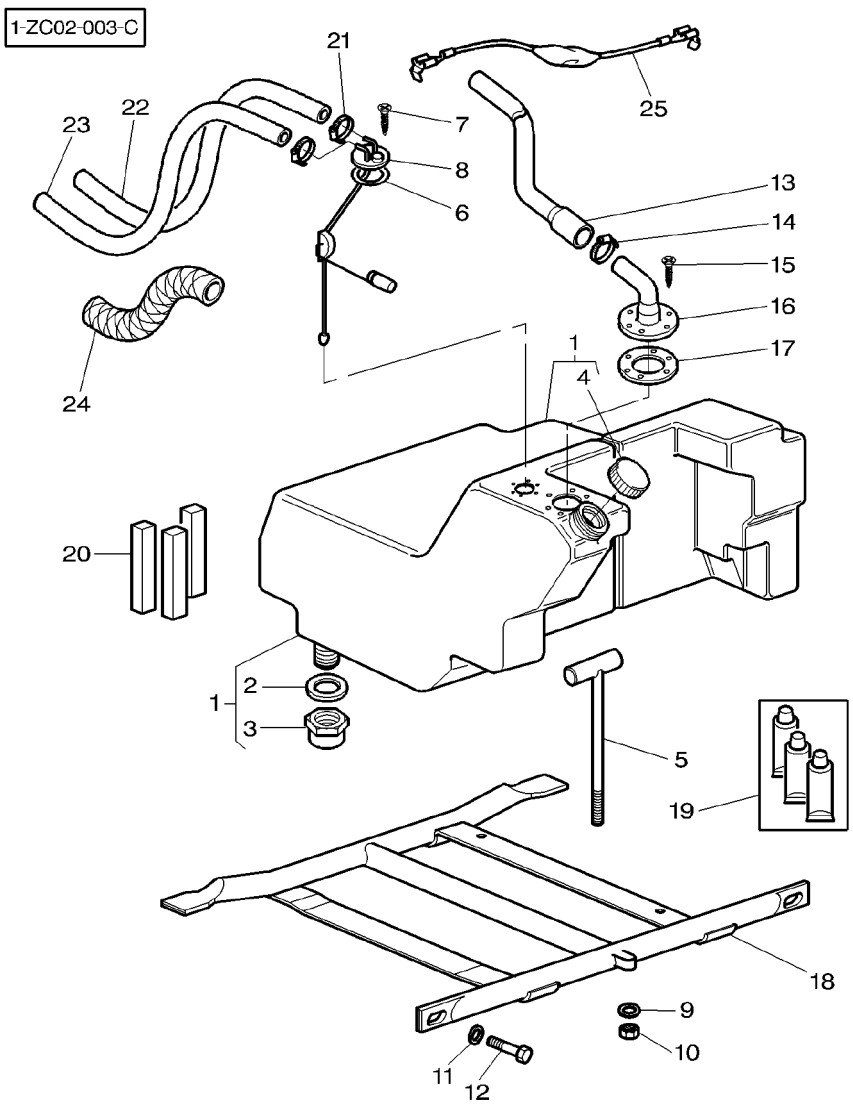

24	3782421M1	◀▶ 500MM ▬▶ H169013	**7** PROTECTIVE STRIP	GAINE PROTECTION GUAINA PROTETTIV	KANTENSCHUTZ BANDA PROTECTORA
25	3783665M1		**1** HARNESS	FAISCEAU FASCIOCAVI	KABELBAUM MAZO CABLES

[A] USED WITH ADDITIONAL FUEL TANK
UTILISE AVEC RESERVOIR SUPPLEMENTAIRE DE GASOLE
VERWENDEN MIT ZUSASTZLICH GASOL TANK
USATO CON SERBATOIO ADDIZIONALE DI GASOLIO
USADO CON DEPOSITO SUPPLEMENTARIO DE GAS OIL

[B] USED WITH 3782335M91
UTILISE AVEC 3782335M91
VERWENDEN MIT 3782335M91
USATO CON 3782335M91
USADO CON 3782335M91

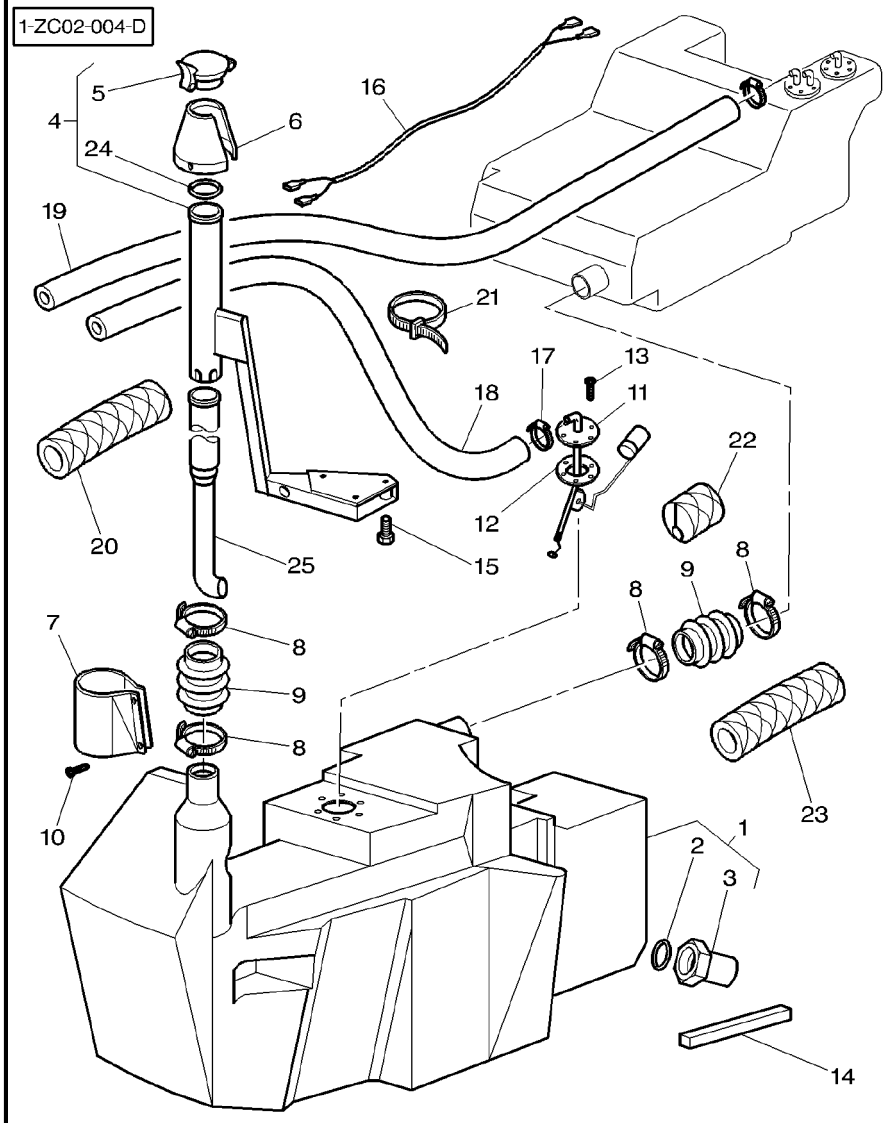

1	3777386M93		1	TANK	RESERVOIR SERBATOIO	TANK TANQUE
2	3616911M1	1	1	GASKET	JOINT GUARNIZIONE	DICHTSCHEIBE EMPAQUETADURA.
3	3616909M1	1	1	PLUG	BOUCHON TAPPO	VERSCHL.STOPFEN TAPON
4	3778296M96	➡| J055016	1	SPOUT	GOULOTTE TUBO DI SCARICO	TUELLE TUBO SALIDA
4	3783921M91	➡ J055017	1	TUBE	TUBE TUBO	ROHR TUBO
5	3778761M1	4	1	PLUG	BOUCHON TAPPO	VERSCHL.STOPFEN TAPON
6	3778531M1		1	COWL	GARANT CAPPOTTATURA	AUFSATZ CAPERUZA
7	3778781M1		1	COWL	GARANT CAPPOTTATURA	AUFSATZ CAPERUZA
8	1440860X1	∅ 60−80	2	CLAMP	COLLIER FASCETTA	HALTESCHELLE ABRAZADERA
9	3778297M1	∅ 68MM	2	HOSE	DURITE TUBO FLESSIBILE	SCHLAUCH FLEXIBLE
9	3582877M2	∅ 58MM	1	HOSE	DURITE TUBO FLESSIBILE	SCHLAUCH FLEXIBLE
10	3005728X1	No 10X16	2	SCREW	VIS VITE	SCHRAUBE TORNILLO
11	3777392M3		1	DIPSTICK	JAUGE ASTA LIVELLO	MESSTAB VARILLA ACEITE
12	1617869M2		1	GASKET	JOINT GUARNIZIONE	DICHTSCHEIBE EMPAQUETADURA.
13	3005728X1	No 10X16	6	SCREW	VIS VITE	SCHRAUBE TORNILLO
14	3618690M1	◀▶ 30 X 13 X 545MM	2	GASKET	JOINT GUARNIZIONE	DICHTSCHEIBE EMPAQUETADURA.
15	339204X1	M10X65	1	SCREW	VIS VITE	SCHRAUBE TORNILLO
15	3009498X1	M10X55	2	BOLT METRIC	BOULON METRIQUE BULLONE METRICO	MASCH.SCHRB MET PERNO METRICO
16	3582936M1		1	HARNESS	FAISCEAU FASCIOCAVI	KABELBAUM MAZO CABLES
17	3712464M1	∅ 12MM	4	CLAMP	COLLIER FASCETTA	HALTESCHELLE ABRAZADERA
18	3582848M2	◀▶ 650MM	1	TUBE	TUBE TUBO	ROHR TUBO
19	3777801M1	◀▶ 3040MM	1	HYDR HOSE	FLEXIBLE TUBOFLEX IDRAUL	HYDR SCHLAUCH TUBO HIDRAULICO
20	3580974M2	◀▶ 380MM ➡ H169012	X	PROTECTIVE STRIP	GAINE PROTECTION GUAINA PROTETTIV	KANTENSCHUTZ BANDA PROTECTORA
20	3782421M1	◀▶ 500MM ➡ H169013	X	PROTECTIVE STRIP	GAINE PROTECTION GUAINA PROTETTIV	KANTENSCHUTZ BANDA PROTECTORA
21	3619622M1		X	CABLE TIE	ATTACHE CABLE FASCETTA CAVI	KABELBINDER ENLACE DE CABLE
22	3783599M1	[A]	1	PROTECTIVE STRIP	GAINE PROTECTION GUAINA PROTETTIV	KANTENSCHUTZ BANDA PROTECTORA

Fuel System **Systeme D Alimentation Carburant** **Kraftstoffanlage** **Tubazioni Nafta** **Sistema Combustible**	**Fuel Tank And Attachments** **Reservoir A Carburant Et Fixation** **Kraftstoffbehaelter Und Befestig.** **Serbatoio Nafta E Fissaggio** **Deposito Combustible Sujecciones**	**10-210**	**Tractor With Cab − With Additional Tank** **Tracteur Avec Cabine − Avec Reservoir Supplementaire** **Traktor Mit Kabine − Mit Zusastzlich Tank** **Trattore Con Cabina − Con Serbatoio Addizionale** **Tractor Con Cabina − Con Caja Supplementario**

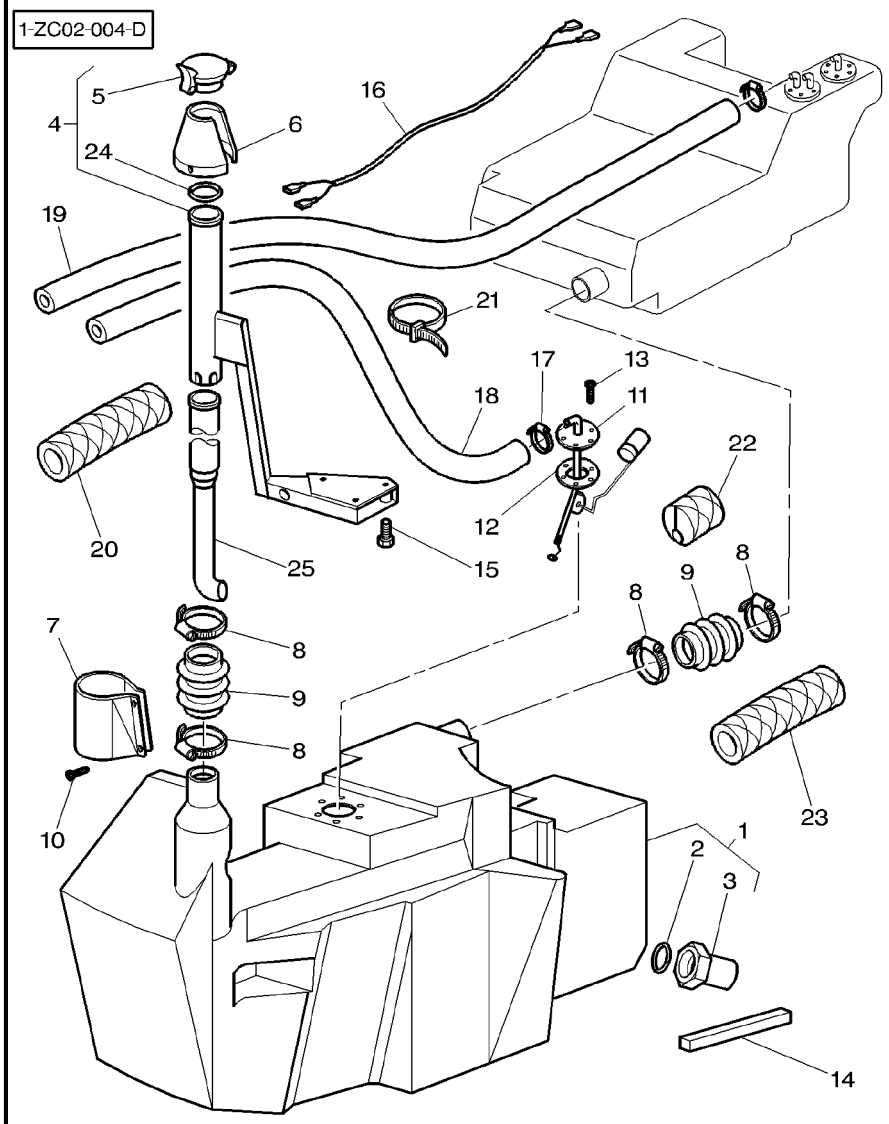

23	3777884M1	[A]	**2**	PROTECTIVE STRIP	GAINE PROTECTION GUAINA PROTETTIV	KANTENSCHUTZ BANDA PROTECTORA
24	**359187X1**	4 ➡ J055017	**1**	O RING	JOINT TORIQUE ANELLO OR	O−RING JUNTA TORICA
25	3782142M93	➡ J055017	**1**	TUBE	TUBE TUBO	ROHR TUBO

[A] FOR JAPANESE MARKET ONLY
POUR MARCHE JAPONAIS SEULEMENT
NUR FUER JAPAN
SOLO PER MERCATO GIAPPONESE
SOLAMENTE PARA EL MERCADO JAPONES

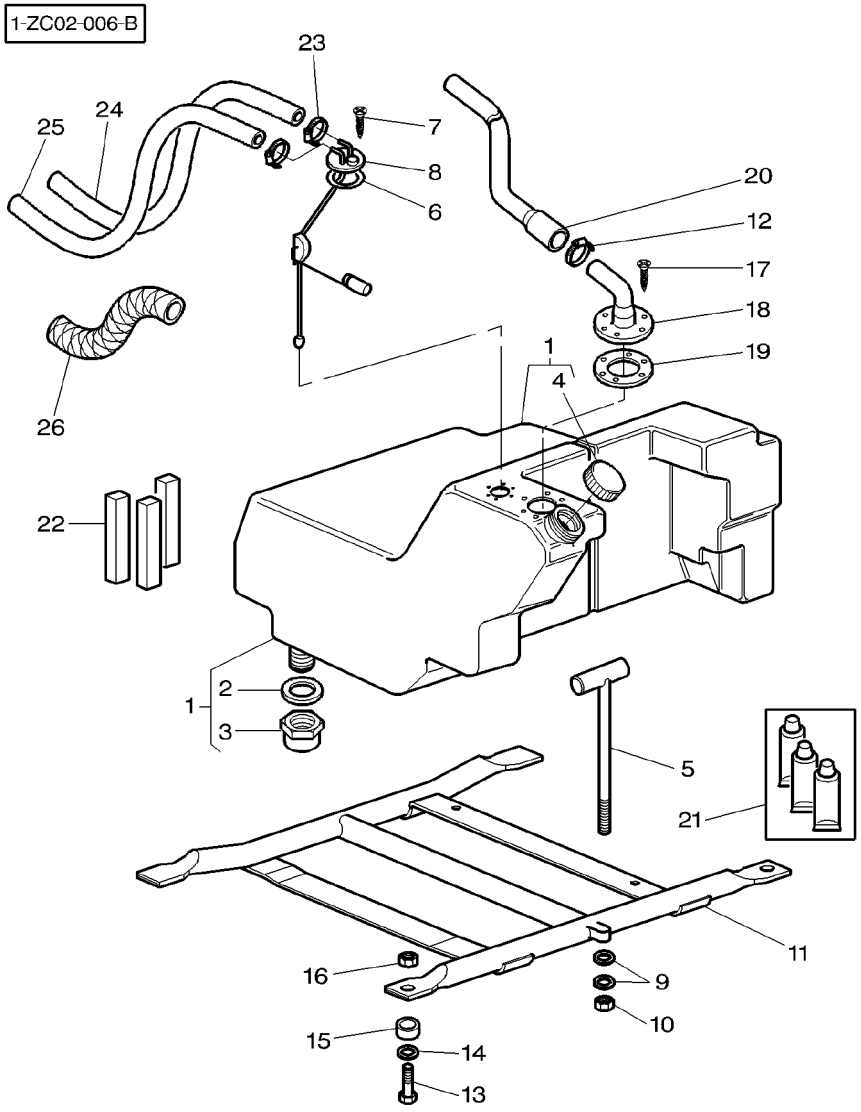

1	3782335M91	275L	**1**	TANK	RESERVOIR SERBATOIO	TANK TANQUE
2	3616911M1	1	**1**	GASKET	JOINT GUARNIZIONE	DICHTSCHEIBE EMPAQUETADURA.
3	3616909M1	1	**1**	PLUG	BOUCHON TAPPO	VERSCHL.STOPFEN TAPON
4	3782340M1	1	**1**	TANK CAP	BOUCHON RESERV CUFFIA SERBATOIO	TANKVERSCHLUSS TAPA DE DEPOSITO
5	3777391M1		**1**	STEM	TIGE STELO	STIEL VASTAGO
6	1617869M2		**1**	GASKET	JOINT GUARNIZIONE	DICHTSCHEIBE EMPAQUETADURA.
7	3005728X1	No 10X16	**6**	SCREW	VIS VITE	SCHRAUBE TORNILLO
8	3782343M1		**1**	DIPSTICK	JAUGE ASTA LIVELLO	MESSTAB VARILLA ACEITE
8	3782394M1	[A]	**1**	FUEL GAUGE	JAUGE CARBURANT INDICAT.LIVELLO	KRAFTST-MESSGER INDIC.COMBUST.
9	390734X1		**2**	WASHER METRIC	RONDELLE METR. RONDELLA METRICO	SCHEIBE METRISCH ARANDELA METRICO
10	1440329X1	M10	**1**	LOCKNUT	ECROU BLOCAGE AUTOBLOCCANTE	FLACHMUTTER CONTRATUERCA
11	3777390M2		**1**	SUPPORT	SUPPORT SUPPORTO	LAGERUNG DISPOS.DE SOSTEN
12	338614X1	∅ 20-32	**1**	HOSE CLIP	COLLIER DURITE STRINGITUBO	SCHLAUCHSCHELLE CLIP P.FLEXIBLE
13	3009498X1	M10X55	**2**	BOLT METRIC	BOULON METRIQUE BULLONE METRICO	MASCH.SCHRB MET PERNO METRICO
14	385362X1		**2**	WASHER METRIC	RONDELLE METR. RONDELLA METRICO	SCHEIBE METRISCH ARANDELA METRICO
15	3580856M1		**2**	SPACER	ENTRETOISE DISTANZIALE	ABSTANDSTUECK PIEZA DISTANCIA
16	3009693X1	M10	**2**	NUT METRIC	ECROU METRIQUE DADO METRICO	MUTTER METRISCH TUERCA METRICO
17	3005728X1	No 10X16	**6**	SCREW	VIS VITE	SCHRAUBE TORNILLO
18	3782043M1		**1**	NON RETURN VALVE	CLAPET VALVOLA NO RITOR	RUCKSCHLAGVENTIL VALVULA DE GRANO
19	1617869M2		**1**	GASKET	JOINT GUARNIZIONE	DICHTSCHEIBE EMPAQUETADURA.
20	3782384M1		**1**	TUBE	TUBE TUBO	ROHR TUBO
21	3600444M91		**1**	KIT, SERVICE	KIT SERVICE KIT DI SERVIZIO	WARTUNGSSATZ JEUGO,SERVICE
22	3600195M91		**1**	PARTS PACK	JEU PIECES PACCO RICAMBI	SATZ TEILE PAQUETE PIEZAS
23	3712464M1		**4**	CLAMP	COLLIER FASCETTA	HALTESCHELLE ABRAZADERA
24	3386990M1	◀▶ 2900MM	**1**	HYDR HOSE	FLEXIBLE TUBOFLEX IDRAUL	HYDR SCHLAUCH TUBO HIDRAULICO
25	3777801M1	◀▶ 3040MM	**1**	HYDR HOSE	FLEXIBLE TUBOFLEX IDRAUL	HYDR SCHLAUCH TUBO HIDRAULICO

1-ZC02-006-B

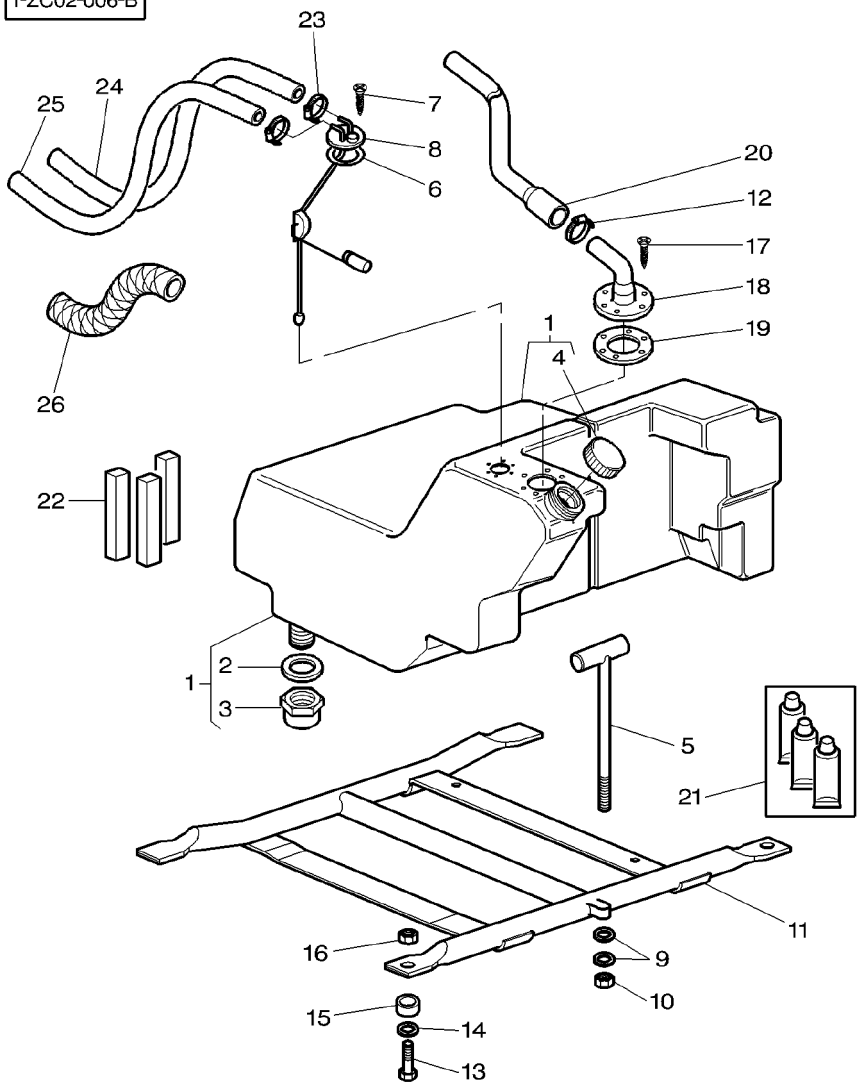

26	3580974M2	◀▶ 380MM ➡| H169012	**2** PROTECTIVE STRIP	GAINE PROTECTION GUAINA PROTETTIV	KANTENSCHUTZ BANDA PROTECTORA
26	3782421M1	◀▶ 500MM ➡ H169013		**4** PROTECTIVE STRIP	GAINE PROTECTION GUAINA PROTETTIV	KANTENSCHUTZ BANDA PROTECTORA

[A] USED WITH ADDITIONAL FUEL TANK
UTILISE AVEC RESERVOIR SUPPLEMENTAIRE DE GASOLE
VERWENDEN MIT ZUSASTZLICH GASOL TANK
USATO CON SERBATOIO ADDIZIONALE DI GASOLIO
USADO CON DEPOSITO SUPPLEMENTARIO DE GAS OIL

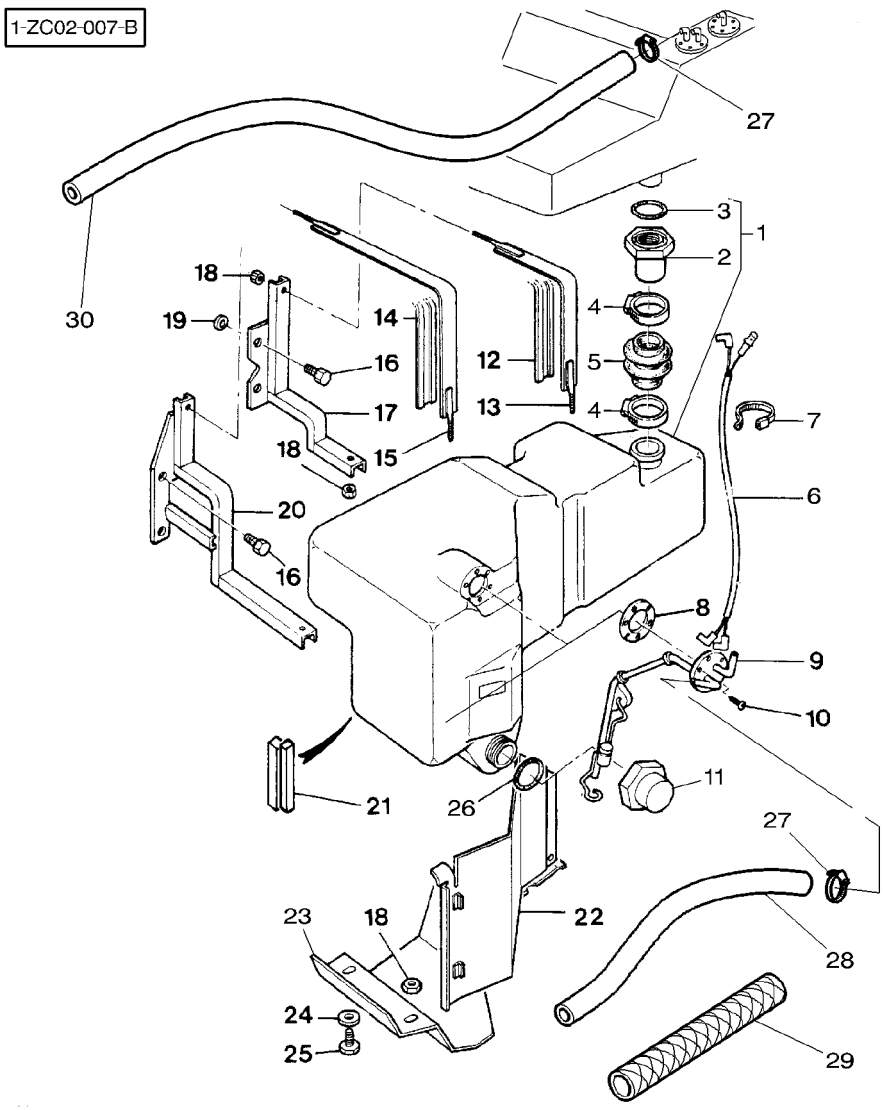

1	3583103M93	60 LITRES	1	TANK	RESERVOIR SERBATOIO	TANK TANQUE
2	3616910M1	1	1	ADAPTOR	ADAPTATEUR ADATTATORE	REDUZIERNIPPEL ADAPTADOR
3	3616911M1	1	1	GASKET	JOINT GUARNIZIONE	DICHTSCHEIBE EMPAQUETADURA.
4	1440860X1		2	CLAMP	COLLIER FASCETTA	HALTESCHELLE ABRAZADERA
5	3714794M1	◄► 102MM	1	HOSE	DURITE TUBO FLESSIBILE	SCHLAUCH FLEXIBLE
6	3582936M1		1	HARNESS	FAISCEAU FASCIOCAVI	KABELBAUM MAZO CABLES
7	3619622M1		3	CABLE TIE	ATTACHE CABLE FASCETTA CAVI	KABELBINDER ENLACE DE CABLE
8	1617869M2		1	GASKET	JOINT GUARNIZIONE	DICHTSCHEIBE EMPAQUETADURA.
9	3582876M1		1	DIPSTICK	JAUGE ASTA LIVELLO	MESSTAB VARILLA ACEITE
10	3005728X1		6	SCREW	VIS VITE	SCHRAUBE TORNILLO
11	3616909M1		1	PLUG	BOUCHON TAPPO	VERSCHL.STOPFEN TAPON
12	3582887M1		1	PROTECTOR	PROTECTEUR PROTETTORE	SCHUTZ PROTECTOR
13	3582883M91		1	BRIDLE	BRIDE BRIGLIA	SPANNBAND BRIDA
14	3582888M1		1	PROTECTOR	PROTECTEUR PROTETTORE	SCHUTZ PROTECTOR
15	3582885M91		1	BRIDLE	BRIDE BRIGLIA	SPANNBAND BRIDA
16	354704X1		4	SCREW UNC	VIS UNC VITE UNC	SCHRAUBE UNC TORNILLO UNC
17	3582880M1		1	SUPPORT	SUPPORT SUPPORTO	LAGERUNG DISPOS.DE SOSTEN
18	1441500X1		4	LOCKNUT	ECROU BLOCAGE AUTOBLOCCANTE	FLACHMUTTER CONTRATUERCA
19	385365X1		2	WASHER	RONDELLE RONDELLA	UNTERLEGSCHEIBE ARANDELA
20	3582881M1		1	SUPPORT	SUPPORT SUPPORTO	LAGERUNG DISPOS.DE SOSTEN
21	3600195M91	[A]	1	PARTS PACK	JEU PIECES PACCO RICAMBI	SATZ TEILE PAQUETE PIEZAS
22	3583524M1		1	COWL	GARANT CAPPOTTATURA	AUFSATZ CAPERUZA
23	3583105M1		1	COWL	GARANT CAPPOTTATURA	AUFSATZ CAPERUZA
24	390972X1		2	WASHER METRIC	RONDELLE METR. RONDELLA METRICO	SCHEIBE METRISCH ARANDELA METRICO
25	339228X1		2	SCREW METRIC	VIS METRIQUE VITE METRICA	SCHRAUBE METR TORNILLO METRICO
26	3616911M1		1	GASKET	JOINT GUARNIZIONE	DICHTSCHEIBE EMPAQUETADURA.

1-ZC02-007-B

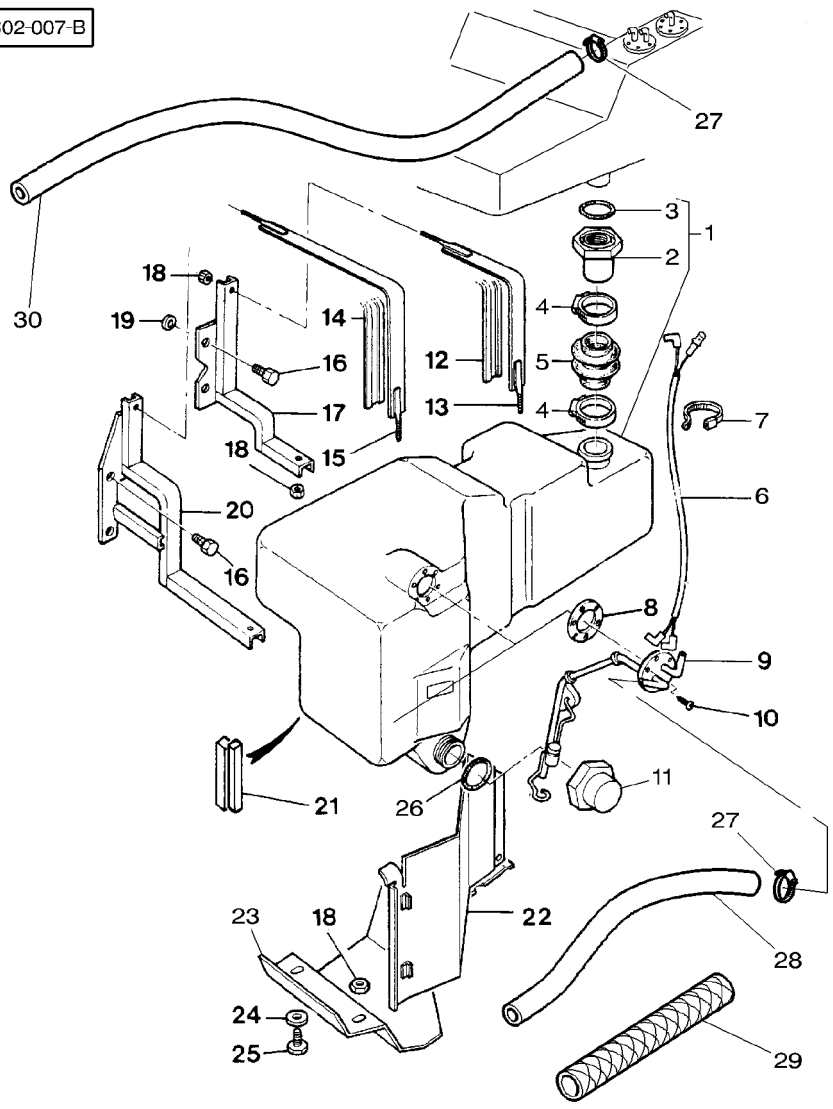

27	3712464M1		4	CLAMP	COLLIER FASCETTA ABRAZADERA	HALTESCHELLE ABRAZADERA ROHR
28	3582848M2	◀▶ 650MM	1	TUBE	TUBE TUBO	ROHR TUBO
29	3580974M2	◀▶ 380MM ▬▶| H169012	1	PROTECTIVE STRIP	GAINE PROTECTION GUAINA PROTETTIV	KANTENSCHUTZ BANDA PROTECTORA
29	3782421M1	◀▶ 500MM ▬▶ H169013	4	PROTECTIVE STRIP	GAINE PROTECTION GUAINA PROTETTIV	KANTENSCHUTZ BANDA PROTECTORA
30	3777801M1	◀▶ 3040MM	1	HYDR HOSE	FLEXIBLE TUBOFLEX IDRAUL	HYDR SCHLAUCH TUBO HIDRAULICO

[A] REPAIR KIT
JEU DE REPARATION
REPARATUR SATZ
GRUPPO RIPARAZIONE
NECESER DE REPARACION

1-ZC03-017-B

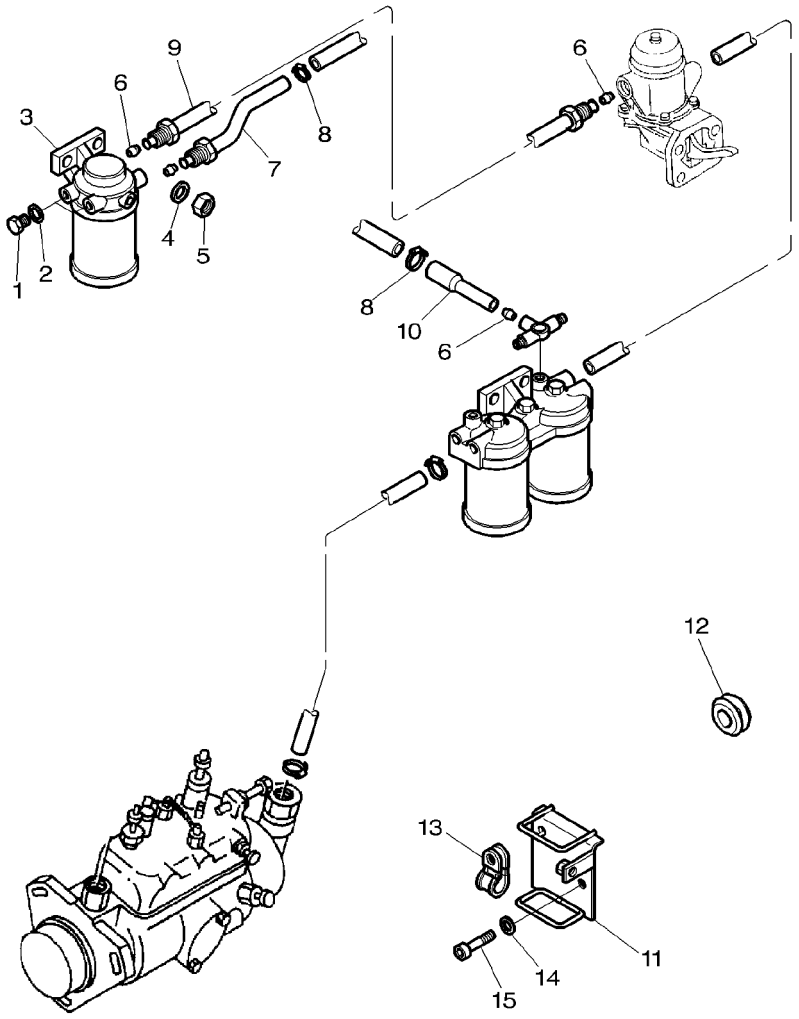

1	884748M1	1/2−20	**2**	PLUG	BOUCHON TAPPO	VERSCHL.STOPFEN TAPON
2	731338M1	13.5−18.2X1.6	**2**	WASHER	RONDELLE RONDELLA	UNTERLEGSCHEIBE ARANDELA
3	3781314M91	150 MICRONS	**1**	SEDIMENT BOWL	DECANTEUR DECANTATORE	ABSETZGEFAESS EMBUDO TRASIEGO
4	391039X1		**2**	WASHER METRIC	RONDELLE METR. RONDELLA METRICO	SCHEIBE METRISCH ARANDELA METRICO
5	339169X1	M8	**2**	NUT METRIC	ECROU METRIQUE DADO METRICO	MUTTER METRISCH TUERCA METRICO
6	376526X1		**3**	OLIVE	OLIVE OLIVA	SCHNEIDRING OLIVA
7	3615331M1		**1**	UNION	RACCORD RACCORDO	VERSCHRAUBUNG RACOR
8	3712464M1		**2**	CLAMP	COLLIER FASCETTA	HALTESCHELLE ABRAZADERA
9	3784085M1	⇒ 3779290M1	**1**	TUBE	TUBE TUBO	ROHR TUBO
10	3783397M1		**1**	TUBE	TUBE TUBO	ROHR TUBO
11	3780558M3		**1**	GUIDE	GUIDE GUIDA	FUEHRUNG GUIA
12	3617983M1		**2**	PLUG	BOUCHON TAPPO	VERSCHL.STOPFEN TAPON
13	747679M1		**2**	STRAP	PATTE CORREGGIA	LASCHE FAJA
14	390972X1		**2**	WASHER METRIC	RONDELLE METR. RONDELLA METRICO	SCHEIBE METRISCH ARANDELA METRICO
15	3019908X1	M8X105	**2**	SCREW	VIS VITE	SCHRAUBE TORNILLO

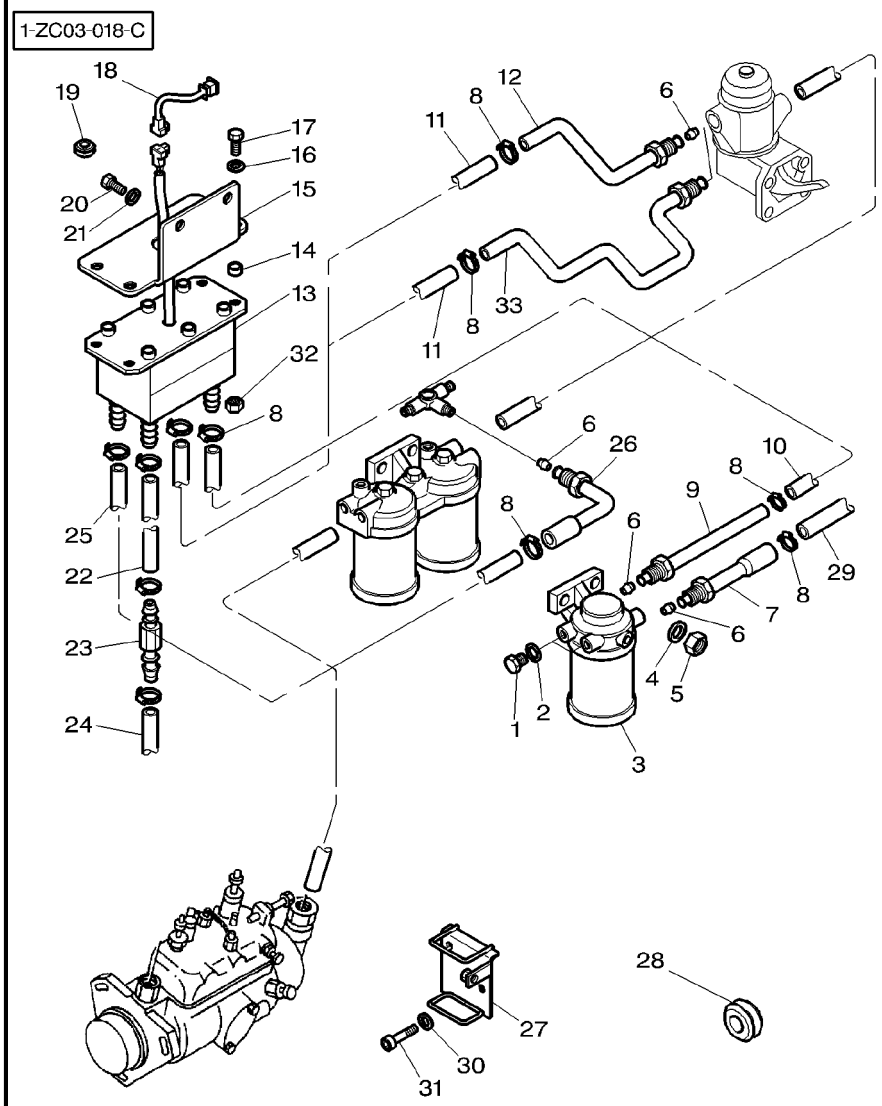

1	884748M1	1/2-20	2	PLUG	BOUCHON TAPPO	VERSCHL.STOPFEN TAPON
2	731338M1	13.5-18.2X1.6	2	WASHER	RONDELLE RONDELLA	UNTERLEGSCHEIBE ARANDELA
3	3781977M91	30 MICRONS	1	SEDIMENT BOWL	DECANTEUR DECANTATORE	ABSETZGEFAESS EMBUDO TRASIEGO
4	391039X1		2	WASHER METRIC	RONDELLE METR. RONDELLA METRICO	SCHEIBE METRISCH ARANDELA METRICO
5	339169X1	M8	2	NUT METRIC	ECROU METRIQUE DADO METRICO	MUTTER METRISCH TUERCA METRICO
6	376526X1		4	OLIVE	OLIVE OLIVA	SCHNEIDRING OLIVA
7	3615331M1		1	UNION	RACCORD RACCORDO	VERSCHRAUBUNG RACOR
8	3712464M1		12	CLAMP	COLLIER FASCETTA	HALTESCHELLE ABRAZADERA
9	3389423M91		1	TUBING	TUBULURE TUBATURA	ROHRSTUTZEN TUBERIA
10	3779452M1	◀▶ 650MM	1	HYDR HOSE	FLEXIBLE TUBOFLEX IDRAUL	HYDR SCHLAUCH TUBO HIDRAULICO
11	3583950M1		1	HYDR HOSE	FLEXIBLE TUBOFLEX IDRAUL	HYDR SCHLAUCH TUBO HIDRAULICO
11	3583950M1	➡| J048015 ◀▶ 1350MM	1	HYDR HOSE	FLEXIBLE TUBOFLEX IDRAUL	HYDR SCHLAUCH TUBO HIDRAULICO
11	3714828M1	➡ J048016 ◀▶ 300MM	1	HYDR HOSE	FLEXIBLE TUBOFLEX IDRAUL	HYDR SCHLAUCH TUBO HIDRAULICO
12	3781317M1	⇦⇨ 3781268M1 ➡| J048015	1	TUBE	TUBE TUBO	ROHR TUBO
13	3714330M2		1	FLOWMETER	DEBITMETRE FLUSSOMETRO	DURCHFLUSSMESSER MEDIDOR CAUDAL
14	3582832M1		4	SPACER	ENTRETOISE DISTANZIALE	ABSTANDSTUECK PIEZA DISTANCIA
15	3779396M1		1	SUPPORT	SUPPORT SUPPORTO	LAGERUNG DISPOS.DE SOSTEN
16	3019560X1		4	WASHER	RONDELLE RONDELLA	UNTERLEGSCHEIBE ARANDELA
17	339563X1	M5X20	4	SCREW METRIC	VIS METRIQUE VITE METRICA	SCHRAUBE METR TORNILLO METRICO
18	3714288M1		1	HARNESS	FAISCEAU FASCIOCAVI	KABELBAUM MAZO CABLES
19	3389410M1	∅ 8-11	4	GROMMET	PASSE FIL GOMMINO	GUMMITUELLE PASACABLE
20	339124X1	M8X16	2	SCREW METRIC	VIS METRIQUE VITE METRICA	SCHRAUBE METR TORNILLO METRICO
21	339024X1		2	WASHER METRIC	RONDELLE METR. RONDELLA METRICO	SCHEIBE METRISCH ARANDELA METRICO
22	3616435M1	◀▶ 280MM	1	HYDR HOSE	FLEXIBLE TUBOFLEX IDRAUL	HYDR SCHLAUCH TUBO HIDRAULICO
23	3781262M1		1	JUNCTION	JONCTION GIUNZIONE	VERBINDG.STUECK EMPALME
24	3777801M1	◀▶ 3040MM	1	HYDR HOSE	FLEXIBLE TUBOFLEX IDRAUL	HYDR SCHLAUCH TUBO HIDRAULICO

1-ZC03-018-C

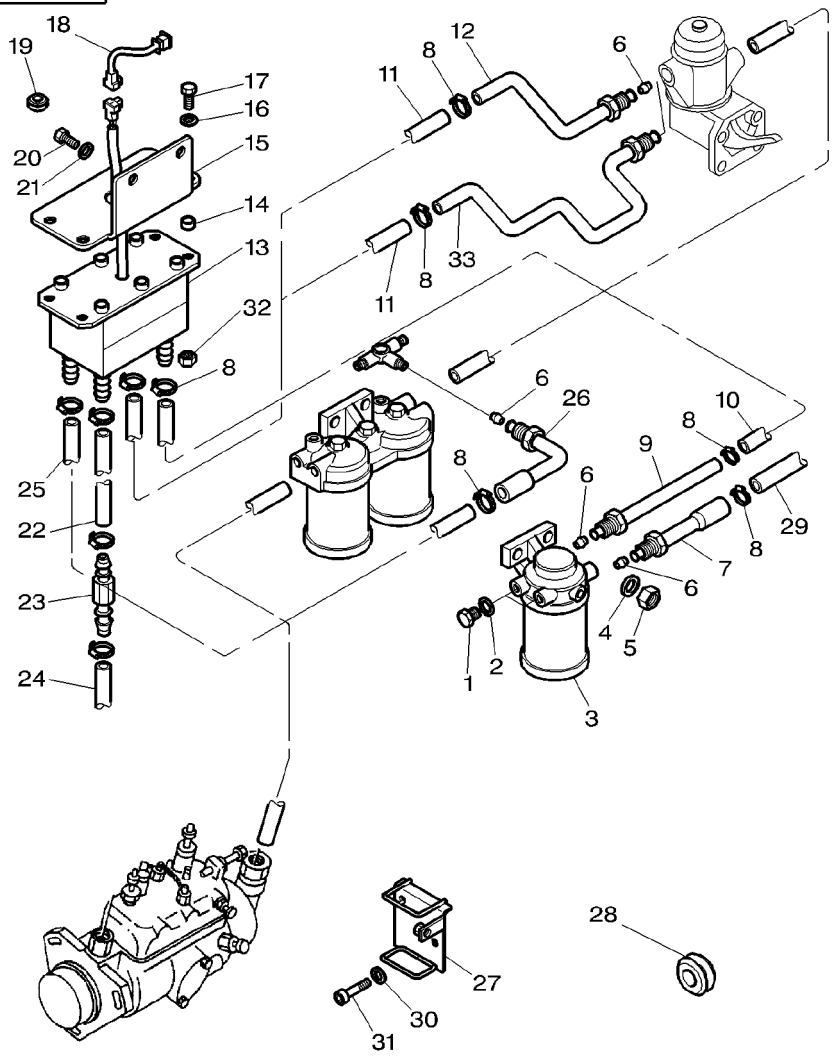

25	3779450M1	◄► 260MM	**1**	HYDR HOSE	FLEXIBLE TUBOFLEX IDRAUL
26	3782208M1		**1**	TUBE	TUBE TUBO
27	3780558M3		**1**	GUIDE	GUIDE GUIDA
28	3617983M1		**2**	PLUG	BOUCHON TAPPO
29	3386990M1	◄► 2900MM	**1**	HYDR HOSE	FLEXIBLE TUBOFLEX IDRAUL
29	3582848M2	[A] ◄► 650MM	**1**	TUBE	TUBE TUBO
30	390972X1		**2**	WASHER METRIC	RONDELLE METR. RONDELLA METRICO
31	3019908X1	M8X105	**2**	SCREW	VIS VITE
32	339169X1	M8	**4**	NUT METRIC	ECROU METRIQUE DADO METRICO
33	3784086M1	➡ J048016 ⇨ 3783708M1	**1**	TUBE	TUBE TUBO

		HYDR SCHLAUCH TUBO HIDRAULICO	
		ROHR TUBO	
		FUEHRUNG GUIA	
		VERSCHL.STOPFEN TAPON	
		HYDR SCHLAUCH TUBO HIDRAULICO	
		ROHR TUBO	
		SCHEIBE METRISCH ARANDELA METRICO	
		SCHRAUBE TORNILLO	
		MUTTER METRISCH TUERCA METRICO	
		ROHR TUBO	

[A] WITH ADDITIONAL FUEL TANK
AVEC RESERVOIR SUPPLEMENTAIRE DE GASOLE
MIT ZUSASTZLICH GASOL TANK
CON SERBATOIO ADDIZIONALE DI GASOLIO
CON DEPOSITO SUPPLEMENTARIO DE GAS OIL

1-ZC03-019-B

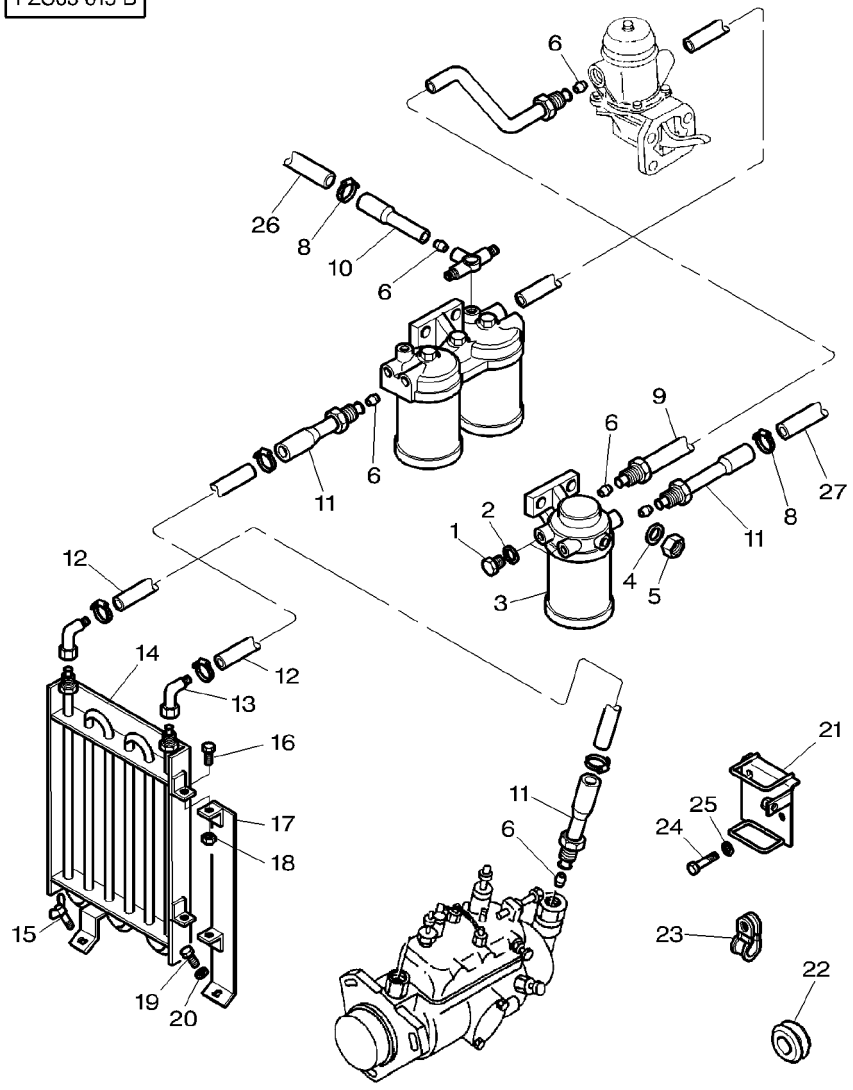

1	884748M1	1/2−20	2	PLUG	BOUCHON TAPPO	VERSCHL.STOPFEN TAPON
2	731338M1	13.5−18.2X1.6	2	WASHER	RONDELLE RONDELLA	UNTERLEGSCHEIBE ARANDELA
3	3781314M91	150 MICRONS	1	SEDIMENT BOWL	DECANTEUR DECANTATORE	ABSETZGEFAESS EMBUDO TRASIEGO
4	391039X1		2	WASHER METRIC	RONDELLE METR. RONDELLA METRICO	SCHEIBE METRISCH ARANDELA METRICO
5	339169X1	M8	2	NUT METRIC	ECROU METRIQUE DADO METRICO	MUTTER METRISCH TUERCA METRICO
6	376526X1		4	OLIVE	OLIVE OLIVA	SCHNEIDRING OLIVA
7	3615331M1		1	UNION	RACCORD RACCORDO	VERSCHRAUBUNG RACOR
8	3712464M1		4	CLAMP	COLLIER FASCETTA	HALTESCHELLE ABRAZADERA
9	3784085M1	⇨ 3779290M1	1	TUBE	TUBE TUBO	ROHR TUBO
10	3783397M1		1	TUBE	TUBE TUBO	ROHR TUBO
11	3615331M1		3	UNION	RACCORD RACCORDO	VERSCHRAUBUNG RACOR
12	3580971M1	◄► 2100MM	2	HYDR HOSE	FLEXIBLE TUBOFLEX IDRAUL	HYDR SCHLAUCH TUBO HIDRAULICO
13	380048X1		2	UNION	RACCORD RACCORDO	VERSCHRAUBUNG RACOR
14	3781199M2		1	COOLER	REFROIDISSEUR REFRIGERATORE	KUEHLAGGREGAT ENFRIADOR
15	339107X1		1	WINGBOLT	VIS A AILETTES BULLONE ALETTATO	FLUEGELSCHRAUBE PERNO DE ALETAS
16	390990X1	M5X12	2	SCREW METRIC	VIS METRIQUE VITE METRICA	SCHRAUBE METR TORNILLO METRICO
17	3781332M1		1	SUPPORT	SUPPORT SUPPORTO	LAGERUNG DISPOS.DE SOSTEN
18	1441494X1		2	NUT METRIC	ECROU METRIQUE DADO METRICO	MUTTER METRISCH TUERCA METRICO
19	339123X1	M8X20	1	SCREW METRIC	VIS METRIQUE VITE METRICA	SCHRAUBE METR TORNILLO METRICO
20	339024X1		1	WASHER METRIC	RONDELLE METR. RONDELLA METRICO	SCHEIBE METRISCH ARANDELA METRICO
21	3780558M3		1	GUIDE	GUIDE GUIDA	FUEHRUNG GUIA
22	367439X1	∅ 15−25	2	GROMMET	PASSE FIL GOMMINO	GUMMITUELLE PASACABLE
23	747679M1		2	STRAP	PATTE CORREGGIA	LASCHE FAJA
24	3019908X1	M8X105	2	SCREW	VIS VITE	SCHRAUBE TORNILLO
25	390972X1		2	WASHER METRIC	RONDELLE METR. RONDELLA METRICO	SCHEIBE METRISCH ARANDELA METRICO
26	3777801M1	◄► 3040MM	1	HYDR HOSE	FLEXIBLE TUBOFLEX IDRAUL	HYDR SCHLAUCH TUBO HIDRAULICO

1-ZC03-019-B

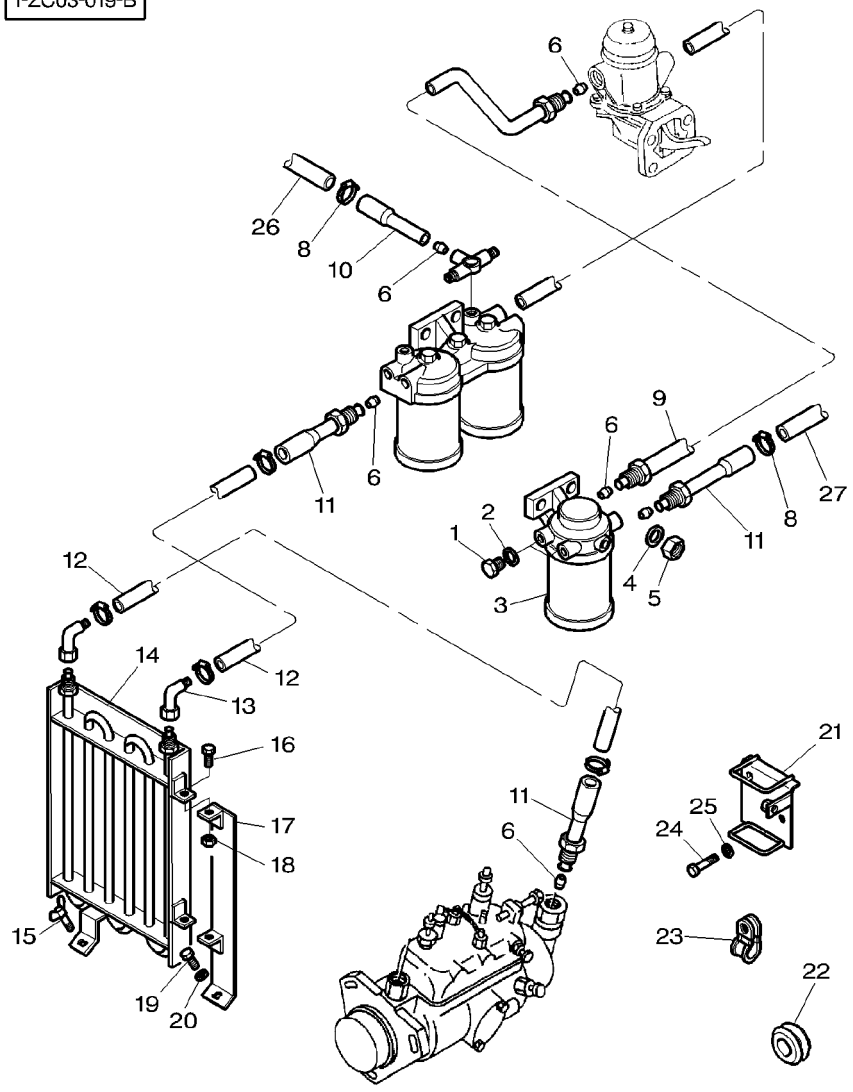

27	3386990M1	◄► 2900MM	**1**	HYDR HOSE	FLEXIBLE TUBOFLEX IDRAUL	HYDR SCHLAUCH TUBO HIDRAULICO
27	3582848M2	[A] ◄► 650MM	**1**	TUBE	TUBE TUBO	ROHR TUBO

[A] WITH ADDITIONAL FUEL TANK
AVEC RESERVOIR SUPPLEMENTAIRE DE GASOLE
MIT ZUSASTZLICH GASOL TANK
CON SERBATOIO ADDIZIONALE DI GASOLIO
CON DEPOSITO SUPPLEMENTARIO DE GAS OIL

Fuel System
Systeme D'Alimentation Carburant
Kraftstoffanlage
Tubazioni Nafta
Sistema Combustible

Fuel Filters And Pipes
Filtre A Carburant Et Tuyauteries
Kraftstoffilter Und Leitungen
Filtri Nafta E Tubazioni
Filtros Combustible Y Conduccione

10-240

With Flow Meter And Fuel Cooler
Avec Debimetre Et Refroidisseur De Carburant
Mit Spendemeter Und Kraftstoffekuelher
Con Misuratore Di Portata I Raffreddatore Di Carburanti
Con Medidor De Caudal E Enfriador De Carburantes

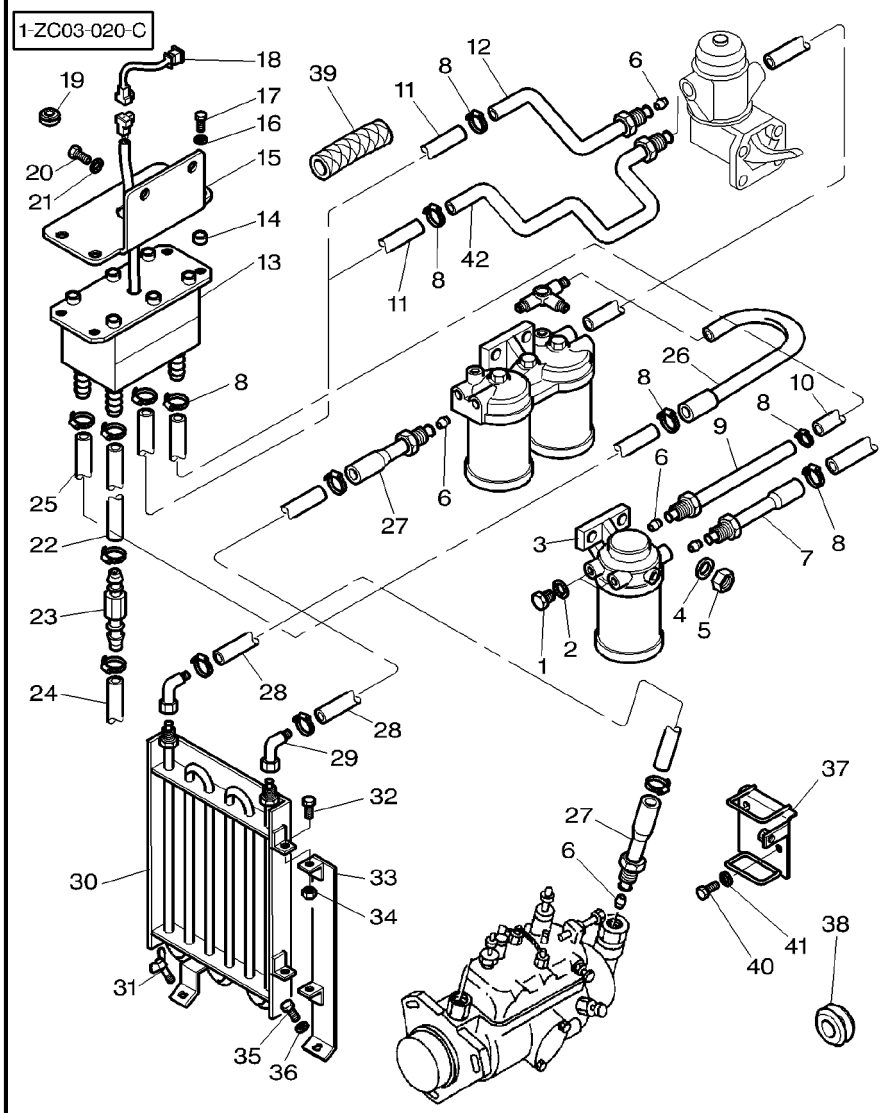

1	884748M1	1/2−20	2	PLUG	BOUCHON TAPPO	VERSCHL.STOPFEN TAPON
2	731338M1	13.5−18.2X1.6	2	WASHER	RONDELLE RONDELLA	UNTERLEGSCHEIBE ARANDELA
3	3781977M91	30 MICRONS	1	SEDIMENT BOWL	DECANTEUR DECANTATORE	ABSETZGEFAESS EMBUDO TRASIEGO
4	391039X1		2	WASHER METRIC	RONDELLE METR. RONDELLA METRICO	SCHEIBE METRISCH ARANDELA METRICO
5	339169X1	M8	2	NUT METRIC	ECROU METRIQUE DADO METRICO	MUTTER METRISCH TUERCA METRICO
6	376526X1		6	OLIVE	OLIVE OLIVA	SCHNEIDRING OLIVA
7	3615331M1		1	UNION	RACCORD RACCORDO	VERSCHRAUBUNG RACOR
8	3712464M1		12	CLAMP	COLLIER FASCETTA	HALTESCHELLE ABRAZADERA
9	3389423M91		1	TUBING	TUBULURE TUBATURA	ROHRSTUTZEN TUBERIA
10	3779452M1	◀▶ 650MM	1	HYDR HOSE	FLEXIBLE TUBOFLEX IDRAUL	HYDR SCHLAUCH TUBO HIDRAULICO
11	3583950M1	▶| J048015 ◀▶ 1000MM	1	HYDR HOSE	FLEXIBLE TUBOFLEX IDRAUL	HYDR SCHLAUCH TUBO HIDRAULICO
11	3714828M1	▶| J048016 ◀▶ 300MM	1	HYDR HOSE	FLEXIBLE TUBOFLEX IDRAUL	HYDR SCHLAUCH TUBO HIDRAULICO
12	3781317M1	⇔ 3781268M1 ▶| J048015	1	TUBE	TUBE TUBO	ROHR TUBO
13	3714330M2		1	FLOWMETER	DEBITMETRE FLUSSOMETRO	DURCHFLUSSMESSER MEDIDOR CAUDAL
14	3582832M1		4	SPACER	ENTRETOISE DISTANZIALE	ABSTANDSTUECK PIEZA DISTANCIA
15	3779396M1		1	SUPPORT	SUPPORT SUPPORTO	LAGERUNG DISPOS.DE SOSTEN
16	3019560X1		4	WASHER	RONDELLE RONDELLA	UNTERLEGSCHEIBE ARANDELA
17	339563X1	M5X20	4	SCREW METRIC	VIS METRIQUE VITE METRICA	SCHRAUBE METR TORNILLO METRICO
18	3714288M1		1	HARNESS	FAISCEAU FASCIOCAVI	KABELBAUM MAZO CABLES
19	3389410M1	∅ 8−11	4	GROMMET	PASSE FIL GOMMINO	GUMMITUELLE PASACABLE
20	339123X1	M8X20	2	SCREW METRIC	VIS METRIQUE VITE METRICA	SCHRAUBE METR TORNILLO METRICO
21	339024X1		2	WASHER METRIC	RONDELLE METR. RONDELLA METRICO	SCHEIBE METRISCH ARANDELA METRICO
22	3616435M1	◀▶ 280MM	1	HYDR HOSE	FLEXIBLE TUBOFLEX IDRAUL	HYDR SCHLAUCH TUBO HIDRAULICO
23	3781262M1		1	JUNCTION	JONCTION GIUNZIONE	VERBINDG.STUECK EMPALME
24	3777801M1	◀▶ 3040MM	1	HYDR HOSE	FLEXIBLE TUBOFLEX IDRAUL	HYDR SCHLAUCH TUBO HIDRAULICO
25	**3389452M1**		1	HYDR HOSE	FLEXIBLE TUBOFLEX IDRAUL	HYDR SCHLAUCH TUBO HIDRAULICO

Fuel System
Systeme D'Alimentation Carburant
Kraftstoffanlage
Tubazioni Nafta
Sistema Combustible

Fuel Filters And Pipes
Filtre A Carburant Et Tuyauteries
Kraftstoffilter Und Leitungen
Filtri Nafta E Tubazioni
Filtros Combustible Y Conduccione

10-240

With Flow Meter And Fuel Cooler
Avec Debimetre Et Refroidisseur De Carburant
Mit Spendemeter Und Kraftstoffekuelher
Con Misuratore Di Portata I Raffreddatore Di Carburanti
Con Medidor De Caudal E Enfriador De Carburantes

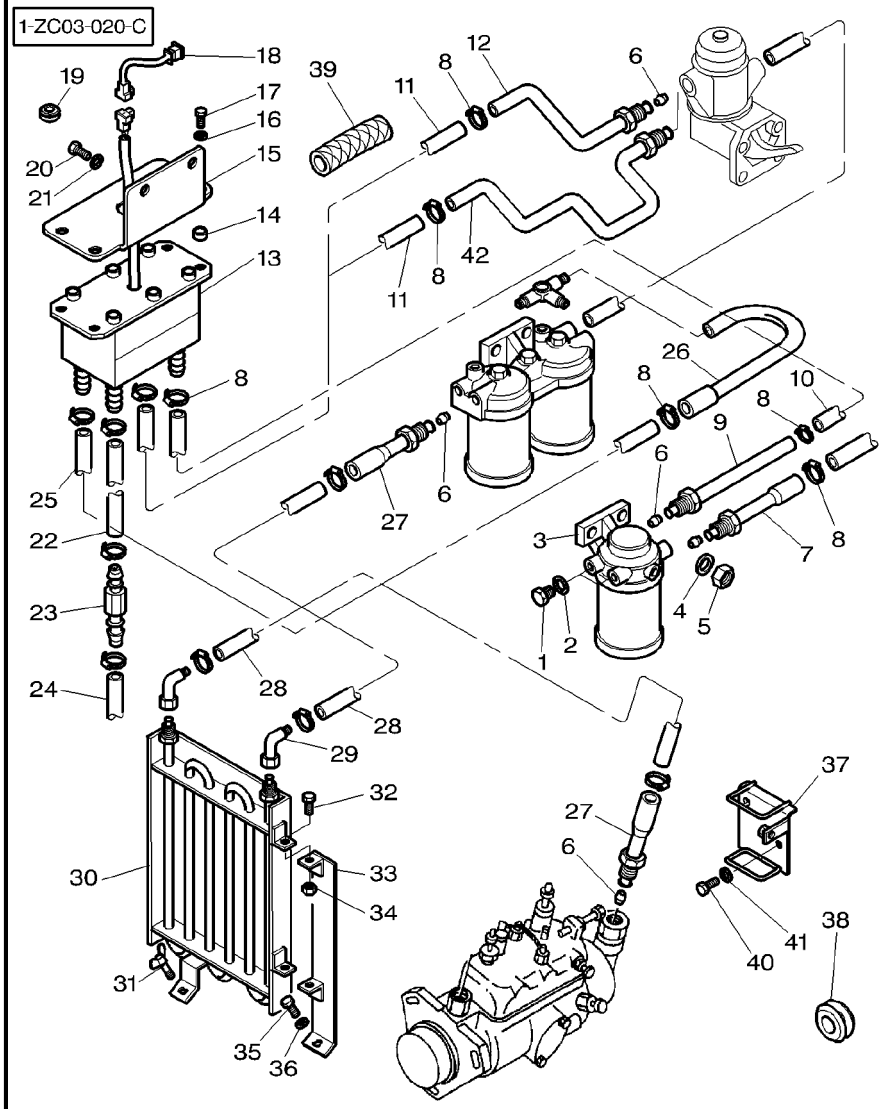

26	3782208M1		1	TUBE	TUBE TUBO	ROHR TUBO
27	3615331M1		2	UNION	RACCORD RACCORDO	VERSCHRAUBUNG RACOR
28	3580971M1	◄► 2100MM	2	HYDR HOSE	FLEXIBLE TUBOFLEX IDRAUL	HYDR SCHLAUCH TUBO HIDRAULICO
29	380048X1		2	UNION	RACCORD RACCORDO	VERSCHRAUBUNG RACOR
30	3781199M2		1	COOLER	REFROIDISSEUR REFRIGERATORE	KUEHLAGGREGAT ENFRIADOR
31	339107X1	M8X16	1	WINGBOLT	VIS A AILETTES BULLONE ALETTATO	FLUEGELSCHRAUBE PERNO DE ALETAS
32	390990X1	M5X12	2	SCREW METRIC	VIS METRIQUE VITE METRICA	SCHRAUBE METR TORNILLO METRICO
33	3781332M1		1	SUPPORT	SUPPORT SUPPORTO	LAGERUNG DISPOS.DE SOSTEN
34	1441494X1	M5	2	NUT METRIC	ECROU METRIQUE DADO METRICO	MUTTER METRISCH TUERCA METRICO
35	339124X1	M8X16	1	SCREW METRIC	VIS METRIQUE VITE METRICA	SCHRAUBE METR TORNILLO METRICO
36	339024X1		1	WASHER METRIC	RONDELLE METR. RONDELLA METRICO	SCHEIBE METRISCH ARANDELA METRICO
37	3780558M3		1	GUIDE	GUIDE GUIDA	FUEHRUNG GUIA
38	367439X1	∅ 15-25	2	GROMMET	PASSE FIL GOMMINO	GUMMITUELLE PASACABLE
39	3782421M1	◄► 500MM	3	PROTECTIVE STRIP	GAINE PROTECTION GUAINA PROTETTIV	KANTENSCHUTZ BANDA PROTECTORA
40	3019908X1	M8X105	2	SCREW	VIS VITE	SCHRAUBE TORNILLO
41	390972X1		2	WASHER METRIC	RONDELLE METR. RONDELLA METRICO	SCHEIBE METRISCH ARANDELA METRICO
42	3784086M1	➡ J048016 ⇨ 3783708M1	1	TUBE	TUBE TUBO	ROHR TUBO

Sedimenter
Sedimenteur
Aussenliegend
Sedimentatore
Sedimentador

10-245

1-ZZ09-001-A

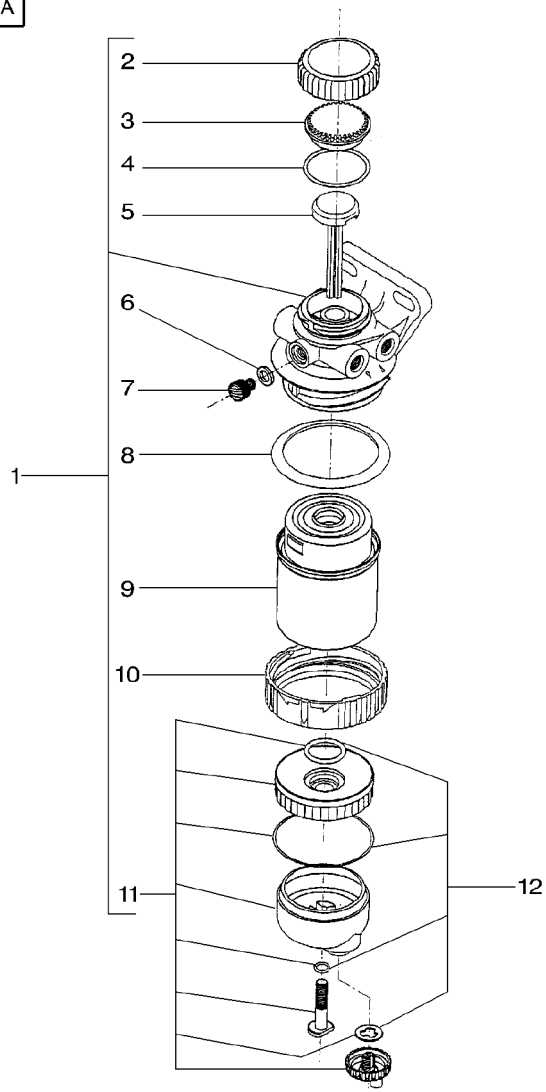

1	3781314M91	150 MICRONS	**1**	SEDIMENT BOWL	DECANTEUR DECANTATORE	ABSETZGEFAESS EMBUDO TRASIEGO
1	3781977M91	[A] 30 MICRONS	**1**	SEDIMENT BOWL	DECANTEUR DECANTATORE	ABSETZGEFAESS EMBUDO TRASIEGO
2	3903292M1	1	**1**	NUT	ECROU DADO	MUTTER TUERCA
3	3903294M1	1	**1**	CAPSULE	CAPSULE CAPSULA	KAPSEL CAPSULA
4	3903293M1	1	**1**	O RING	JOINT TORIQUE ANELLO OR	O-RING JUNTA TORICA
5	3903295M1	1	**1**	PLUG	BOUCHON TAPPO	VERSCHL.STOPFEN TAPON
6	3903296M1	1	**1**	GASKET	JOINT GUARNIZIONE	DICHTSCHEIBE EMPAQUETADURA.
7	3903297M1	1	**1**	BLEEDER	PURGEUR VALVOLA SPURGO	ABLASSHAHN SANGRADOR
8	3903298M1	1	**1**	SEAL	JOINT ETANCHEITE PARAOLIO	DICHTRING RETEN
9	***3780299M1***	1 [C] 150 MICRONS	**1**	FILTER INSERT	ELEMENT FILTRANT ELEMENTO FILTRAN	FILTEREINSATZ SUPLEMENT FILTRO
9	***3780931M1***	1 [B] 30 MICRONS	**1**	FILTER INSERT	ELEMENT FILTRANT ELEMENTO FILTRAN	FILTEREINSATZ SUPLEMENT FILTRO
10	3903299M1	1	**1**	RING	ANNEAU ANELLO	RING ARO
11	3903300M91	1	**1**	CONTAINER	CUVE CONTENITORE	BEHAELTER CONTENEDOR
12	3903301M91		**1**	KIT, JOINT	JEU JOINTS KIT GIUNTO	DICHTUNGSSATZ JUEGO JUNTAS

[A] WITH FUEL FLOWMETER
AVEC CONTROLEUR DE DEBIT CARBURANT
MIT KRAFTST.DURCHFLUSSMESSER
CON FLUSSOMETRO COMBUSTIBILE
CON INDICATOR DE FLUJO DE COMBUSTIBILE

[B] USE WITH 3781977M91
UTILISER AVEC 3781977M91
VERWENDEN MIT 3781977M91
USATO CON 3781977M91
USA CON 3781977M91

[C] USE WITH 3781314M91
UTILISER AVEC 3781314M91
VERWENDEN MIT 3781314M91
USATO CON 3781314M91
USA CON 3781314M91

1-ZC02-005-B

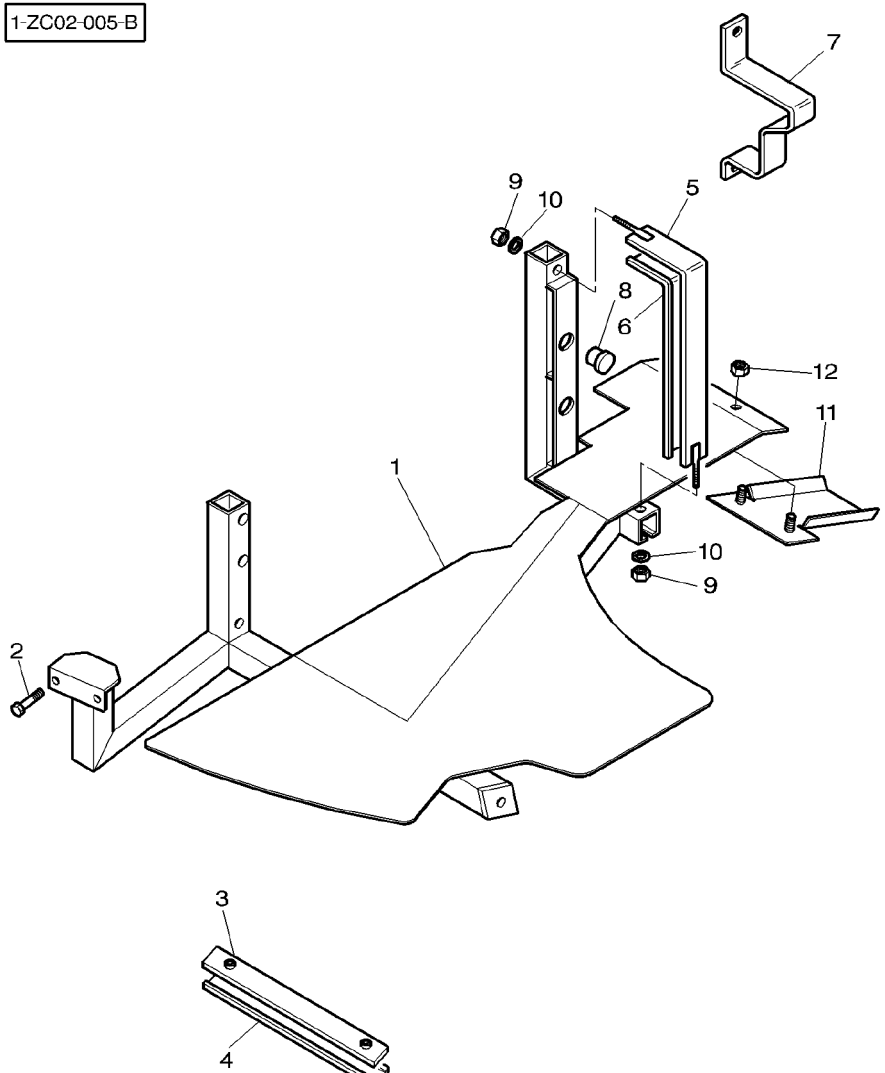

1	3781375M93		1 FRAME	BATI TELAIO	RAHMEN BASTIDOR
2	390830X1	M8X70	2 SCREW	VIS VITE	SCHRAUBE TORNILLO
3	3780189M91	⇒ 3778300M2	1 SUPPORT	SUPPORT SUPPORTO	LAGERUNG DISPOS.DE SOSTEN
4	3778385M1		1 PROTECTOR	PROTECTEUR PROTETTORE	SCHUTZ PROTECTOR
5	3778298M1		1 BRIDLE	BRIDE BRIGLIA	SPANNBAND BRIDA
6	3778317M1		1 PROTECTOR	PROTECTEUR PROTETTORE	SCHUTZ PROTECTOR
7	3781377M1		1 STOP	BUTEE STOP	ANSCHLAG PARO
8	3580599M1		2 PLUG	BOUCHON TAPPO	VERSCHL.STOPFEN TAPON
9	1441500X1	M6	2 LOCKNUT	ECROU BLOCAGE AUTOBLOCCANTE	FLACHMUTTER CONTRATUERCA
10	391038X1		2 WASHER METRIC	RONDELLE METR. RONDELLA METRICO	SCHEIBE METRISCH ARANDELA METRICO
11	3784015M1	[A]	1 COWL	GARANT CAPPOTTATURA	AUFSATZ CAPERUZA
12	1441462X1		2 LOCKNUT	ECROU BLOCAGE AUTOBLOCCANTE	FLACHMUTTER CONTRATUERCA

[A] FOR JAPANESE MARKET ONLY
POUR MARCHE JAPONAIS SEULEMENT
NUR FUER JAPAN
SOLO PER MERCATO GIAPPONESE
SOLAMENTE PARA EL MERCADO JAPONES

Air Filter
Filtre A Air
Luftfilter
Filtro Aria
Filtro Del Aire

Dry – Dual Element
Sec Deux Elements
Doppelter Trockenfiltereinsatz
Doppio Elemento
Elemento Doble Seco

10-255

1-ZC20-008-B

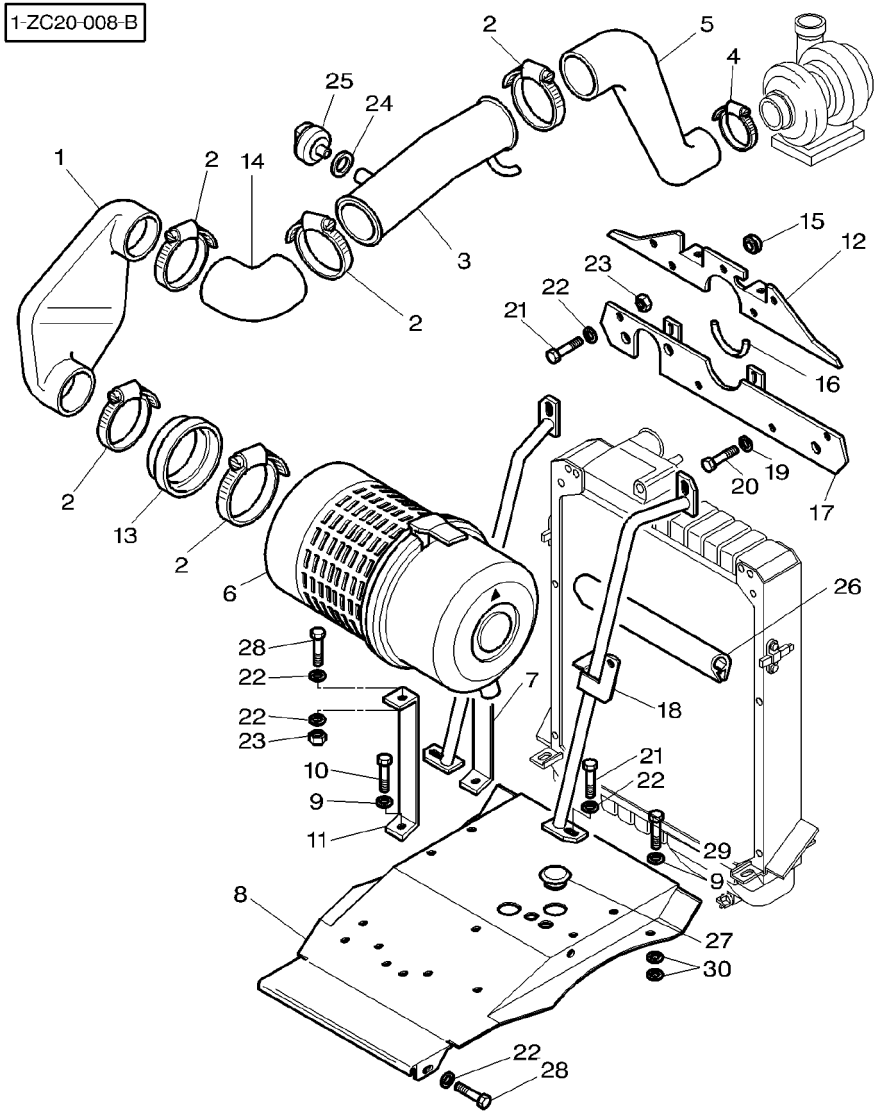

1	3780243M2		**1**	HOSE	DURITE	SCHLAUCH
					TUBO FLESSIBILE	FLEXIBLE
2	338622X1		**5**	CLAMP	COLLIER	HALTESCHELLE
					FASCETTA	ABRAZADERA
3	3780252M2	[CF]	**1**	HOSE	DURITE	SCHLAUCH
					TUBO FLESSIBILE	FLEXIBLE
3	3780252M2	[ED]		HOSE	DURITE	SCHLAUCH
					TUBO FLESSIBILE	FLEXIBLE
3	3783567M1	[CD]	**1**	TUBE	TUBE	ROHR
					TUBO	TUBO
3	3783361M2	[EF]	**1**	TUBE	TUBE	ROHR
					TUBO	TUBO
4	3780574M1		**1**	CLAMP	COLLIER	HALTESCHELLE
					FASCETTA	ABRAZADERA
5	3780253M2		**1**	HOSE	DURITE	SCHLAUCH
					TUBO FLESSIBILE	FLEXIBLE
6	3780025M1	👁 10–265 No 1	**1**	AIR FILTER	FILTRE AIR	LUFTFILTER
					FILTRO ARIA	FILTRO DE AIRE
7	3783211M1		**1**	SUPPORT	SUPPORT	LAGERUNG
					SUPPORTO	DISPOS.DE SOSTEN
8	3782181M6		**1**	SHIELD	TOLE	SCHILD
					RIPARO	BLINDAJE
9	391039X1		**4**	WASHER METRIC	RONDELLE METR.	SCHEIBE METRISCH
					RONDELLA METRICO	ARANDELA METRICO
10	339123X1	M8X20	**4**	SCREW METRIC	VIS METRIQUE	SCHRAUBE METR
					VITE METRICA	TORNILLO METRICO
11	3783210M1		**1**	SUPPORT	SUPPORT	LAGERUNG
					SUPPORTO	DISPOS.DE SOSTEN
12	3782160M3	▲	**1**	BAFFLE	CHICANE	LEITBLECH
					VARIANTE	DESVIADOR
13	3780728M1		**1**	HOSE	DURITE	SCHLAUCH
					TUBO FLESSIBILE	FLEXIBLE
14	3780727M1		**1**	HOSE	DURITE	SCHLAUCH
					TUBO FLESSIBILE	FLEXIBLE
15	3388889M1		**1**	GROMMET	PASSE FIL	GUMMITUELLE
					GOMMINO	PASACABLE
16	3778990M1	◀▶ 165MM	**2**	GASKET	JOINT	DICHTSCHEIBE
					GUARNIZIONE	EMPAQUETADURA.
17	3782161M1	▼	**1**	BAFFLE	CHICANE	LEITBLECH
					VARIANTE	DESVIADOR
18	3782432M3	◀	**1**	REINFORCEMENT	RENFORT	VERSTAERKUNG
					RINFORZO	REFUERZO
18	3782433M3	▶	**1**	REINFORCEMENT	RENFORT	VERSTAERKUNG
					RINFORZO	REFUERZO
19	391038X1		**2**	WASHER METRIC	RONDELLE METR.	SCHEIBE METRISCH
					RONDELLA METRICO	ARANDELA METRICO
20	339560X1	M6X16	**2**	SCREW METRIC	VIS METRIQUE	SCHRAUBE METR
					VITE METRICA	TORNILLO METRICO
21	339124X1	M8X16	**6**	SCREW METRIC	VIS METRIQUE	SCHRAUBE METR
					VITE METRICA	TORNILLO METRICO
22	391039X1		**10**	WASHER METRIC	RONDELLE METR.	SCHEIBE METRISCH
					RONDELLA METRICO	ARANDELA METRICO

1-ZC20-008-B

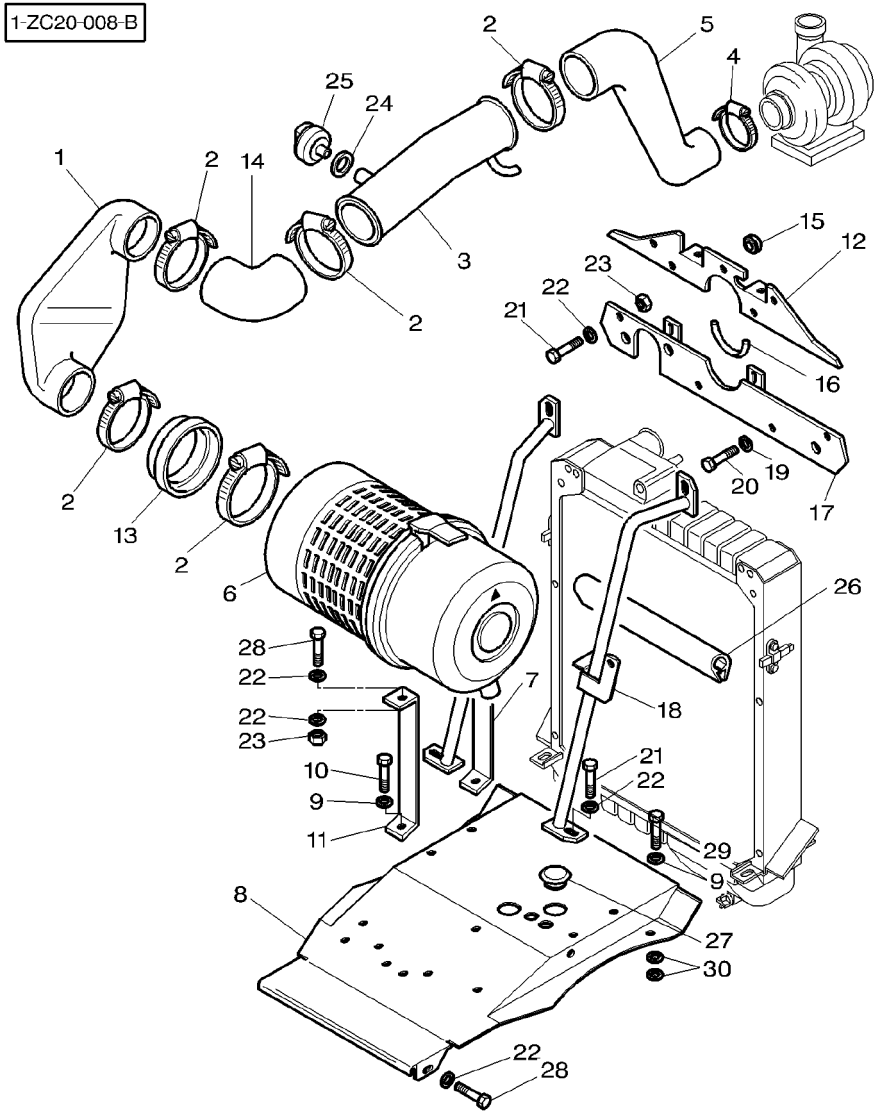

23	339169X1		
24	3808455M1	[A]	
25	***3808462M1***	[A]	
25	3781297M1	[B]	
26	3782344M1		
27	3778376M2	∅	54MM
28	339337X1		M8X30
29	339010X1		M8X40
30	1440264X1	➡	23-01-2000

[A] WITH DYNASHIFT
AVEC DYNASHIFT
MIT DYNASHIFT
CON DYNASHIFT
CON DYNASHIFT

[B] WITH FULL POWERSHIFT
AVEC FULL POWERSHIFT
MIT FULL POWERSHIFT
CON FULL POWERSHIFT
CON FULL POWERSHIFT

[C] WITHOUT OIL RECOVERY
SANS RECUPERATION D'HUILE
OHNE OLRUCKGEWINNUNG
SENZA CORECUPERO D'OLIO
SIN RECUPERACION DEL ACEITE

[D] WITHOUT PNEUMATIC BRAKE
SANS FREINAGE PNEUMATIQUE
OHNE LUFTDRUCKBREMSE
SENZA FRENO PNEUMATICO
SIN FRENO NEUMATICO

[E] WITH OIL RECOVERY
AVEC RECUPERATION D'HUILE
MIT OLRUCKGEWINNUNG
CON CORECUPERO D'OLIO
CON RECUPERACION DEL ACEITE

[F] WITH PNEUMATIC BRAKE
AVEC FREINAGE PNEUMATIQUE
MIT LUFTDRUCKBREMSE
CON FRENO PNEUMATICO
CON FRENO NEUMATICO

2	NUT METRIC	ECROU METRIQUE DADO METRICO	MUTTER METRISCH TUERCA METRICO
1	WASHER	RONDELLE RONDELLA	UNTERLEGSCHEIBE ARANDELA
1	PRESSURE SWITCH	MANO CONTACT INTERRUTTORE PRE	DRUCKSCHALTER INTERRUP PRESION
1	VALVOMETER	DEPRESSIOMETRE VALVOMETRO	VAKUUMMETER DEPRESIOMETRO
1	GASKET	JOINT GUARNIZIONE	DICHTSCHEIBE EMPAQUETADURA.
1	TAP	OBTURATEUR TAPPO*	HAHN GRIFO
4	SCREW METRIC	VIS METRIQUE VITE METRICA	SCHRAUBE METR TORNILLO METRICO
2	BOLT METRIC	BOULON METRIQUE BULLONE METRICO	MASCH.SCHRB MET PERNO METRICO
4	WASHER METRIC	RONDELLE METR. RONDELLA METRICO	SCHEIBE METRISCH ARANDELA METRICO

Air Filter **Filtre A Air** **Luftfilter** **Filtro Aria** **Filtro Del Aire**	**Dry – Dual Element** **Sec Deux Elements** **Doppelter Trockenfiltereinsatz** **Doppio Elemento** **Elemento Doble Seco**	**10-260**

With Platform
Avec Plateforme
Mit Plattform
Con Plattaforma
Con Plataforma

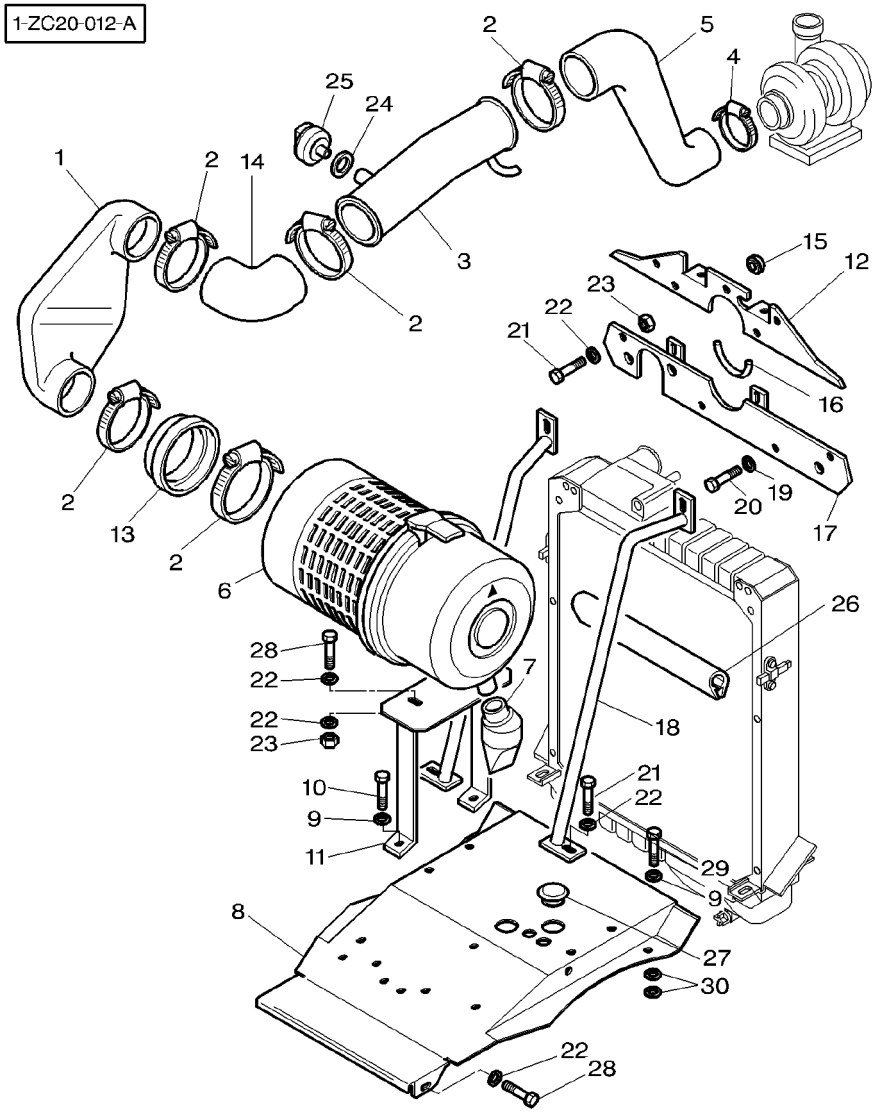

1	3780243M2		**1**	HOSE	DURITE TUBO FLESSIBILE	SCHLAUCH FLEXIBLE
2	338622X1		**5**	CLAMP	COLLIER FASCETTA	HALTESCHELLE ABRAZADERA
3	3780252M2		**1**	HOSE	DURITE TUBO FLESSIBILE	SCHLAUCH FLEXIBLE
3	3783567M1	[C]	**1**	TUBE	TUBE TUBO	ROHR TUBO
4	3780574M1		**1**	CLAMP	COLLIER FASCETTA	HALTESCHELLE ABRAZADERA
5	3780253M2		**1**	HOSE	DURITE TUBO FLESSIBILE	SCHLAUCH FLEXIBLE
6	3780025M1	👁 10–265 No 1	**1**	AIR FILTER	FILTRE AIR FILTRO ARIA	LUFTFILTER FILTRO DE AIRE
7	3783088M1		**1**	PRESSURE VALVE	VALVE VALVOLA PRESSION	DRUCKVENTIL VALVULA PRESION
8	3782181M6		**1**	SHIELD	TOLE RIPARO	SCHILD BLINDAJE
9	391039X1		**4**	WASHER METRIC	RONDELLE METR. RONDELLA METRICO	SCHEIBE METRISCH ARANDELA METRICO
10	339337X1	M8X30	**2**	SCREW METRIC	VIS METRIQUE VITE METRICA	SCHRAUBE METR TORNILLO METRICO
11	3783019M1		**1**	SUPPORT	SUPPORT SUPPORTO	LAGERUNG DISPOS.DE SOSTEN
12	3782160M3	▲	**1**	BAFFLE	CHICANE VARIANTE	LEITBLECH DESVIADOR
13	3780728M1		**1**	HOSE	DURITE TUBO FLESSIBILE	SCHLAUCH FLEXIBLE
14	3780727M1		**1**	HOSE	DURITE TUBO FLESSIBILE	SCHLAUCH FLEXIBLE
15	3388889M1		**1**	GROMMET	PASSE FIL GOMMINO	GUMMITUELLE PASACABLE
16	3778990M1	◀▶ 165MM	**2**	GASKET	JOINT GUARNIZIONE	DICHTSCHEIBE EMPAQUETADURA.
17	3782161M1	▼	**1**	BAFFLE	CHICANE VARIANTE	LEITBLECH DESVIADOR
18	3783017M1	◀	**1**	REINFORCEMENT	RENFORT RINFORZO	VERSTAERKUNG REFUERZO
18	3783018M1	▶	**1**	REINFORCEMENT	RENFORT RINFORZO	VERSTAERKUNG REFUERZO
19	391038X1		**2**	WASHER METRIC	RONDELLE METR. RONDELLA METRICO	SCHEIBE METRISCH ARANDELA METRICO
20	339560X1	M6X16	**2**	SCREW METRIC	VIS METRIQUE VITE METRICA	SCHRAUBE METR TORNILLO METRICO
21	339124X1	M8X16	**6**	SCREW METRIC	VIS METRIQUE VITE METRICA	SCHRAUBE METR TORNILLO METRICO
22	391039X1		**12**	WASHER METRIC	RONDELLE METR. RONDELLA METRICO	SCHEIBE METRISCH ARANDELA METRICO
23	339169X1		**4**	NUT METRIC	ECROU METRIQUE DADO METRICO	MUTTER METRISCH TUERCA METRICO
24	3808455M1	[A]	**1**	WASHER	RONDELLE RONDELLA	UNTERLEGSCHEIBE ARANDELA

Air Filter **Filtre A Air** **Luftfilter** **Filtro Aria** **Filtro Del Aire**	**Dry – Dual Element** **Sec Deux Elements** **Doppelter Trockenfiltereinsatz** **Doppio Elemento** **Elemento Doble Seco**	**10-260**	**With Platform** **Avec Plateforme** **Mit Plattform** **Con Plattaforma** **Con Plataforma**

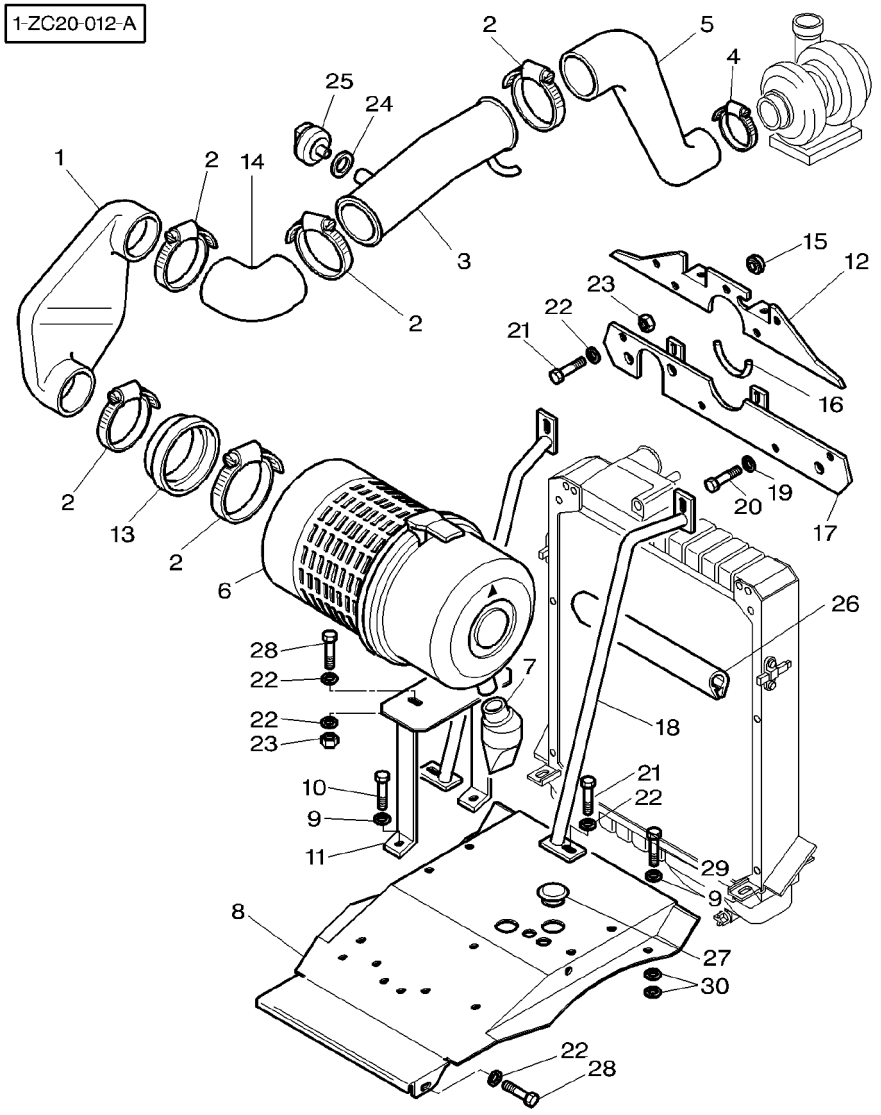

25	***3808462M1***	[A]	**1**	PRESSURE SWITCH	MANO CONTACT INTERRUTTORE PRE	DRUCKSCHALTER INTERRUP PRESION
25	3781297M1	[B]	**1**	VALVOMETER	DEPRESSIOMETRE VALVOMETRO	VAKUUMMETER DEPRESIOMETRO
26	3782344M1		**1**	GASKET	JOINT GUARNIZIONE	DICHTSCHEIBE EMPAQUETADURA.
27	3778376M2	∅ 54MM	**1**	TAP	OBTURATEUR TAPPO*	HAHN GRIFO
28	339337X1	M8X30	**4**	SCREW METRIC	VIS METRIQUE VITE METRICA	SCHRAUBE METR TORNILLO METRICO
29	339010X1	M8X40	**2**	BOLT METRIC	BOULON METRIQUE BULLONE METRICO	MASCH.SCHRB MET PERNO METRICO
30	1440264X1	➡ 23-01-2000	**4**	WASHER METRIC	RONDELLE METR. RONDELLA METRICO	SCHEIBE METRISCH ARANDELA METRICO

[A] WITH DYNASHIFT
AVEC DYNASHIFT
MIT DYNASHIFT
CON DYNASHIFT
CON DYNASHIFT

[B] WITH FULL POWERSHIFT
AVEC FULL POWERSHIFT
MIT FULL POWERSHIFT
CON FULL POWERSHIFT
CON FULL POWERSHIFT

[C] WITHOUT OIL RECOVERY
SANS RECUPERATION D'HUILE
OHNE OLRUCKGEWINNUNG
SENZA CORECUPERO D'OLIO
SIN RECUPERACION DEL ACEITE

Air Filter **Filtre A Air** **Luftfilter** **Filtro Aria** **Filtro Del Aire**	**Dry – Dual Element** **Sec Deux Elements** **Doppelter Trockenfiltereinsatz** **Doppio Elemento** **Elemento Doble Seco**	**10-265**

1-ZC20-005-A

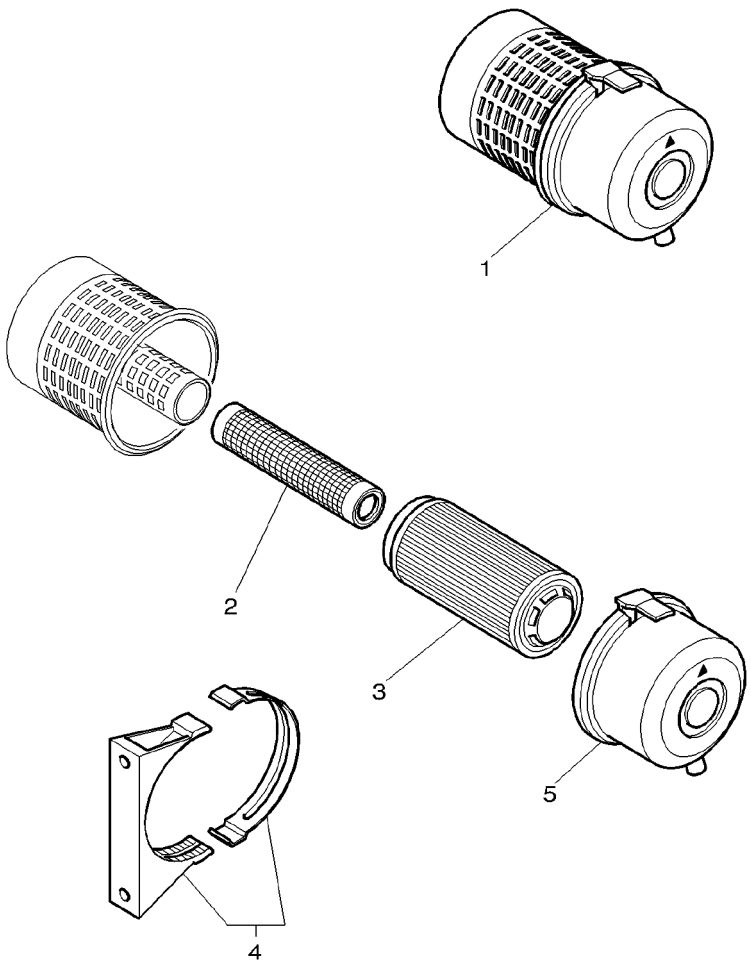

1	3780025M1		**1**	AIR FILTER	FILTRE AIR FILTRO ARIA	LUFTFILTER FILTRO DE AIRE
2	***3901478M1***	1	**1**	ELEMENT,AIR FITR	ELEMENT, FIL AIR ELEM FILTRO ARIA	LUFTF.EINSATZ FILTRO AIRE
3	***3901477M1***	1	**1**	ELEMENT,AIR FITR	ELEMENT, FIL AIR ELEM FILTRO ARIA	LUFTF.EINSATZ FILTRO AIRE
4	3903209M1	1	**1**	CLAMP	COLLIER FASCETTA	HALTESCHELLE ABRAZADERA
5	3903210M1	1	**1**	COVER	COUVERCLE COPERCHIO	DECKEL CUBIERTA

Vertical Exhaust On The Side
Echappement Vertical Lateral
Senkrechtem Seitenauspuff
Scarico Verticale Lateral
Escape Vertical Lano Lateral

10-270

With Dusty Aspiration Up To No
Avec Aspiration De Poussieres Jusqu'Au No
Mit Staub Ansaugen Bis No
Con Aspirazione Di Polvere Fino Alla
Con Aspiracion De Polvo Hasta No

1-ZC11-007-B

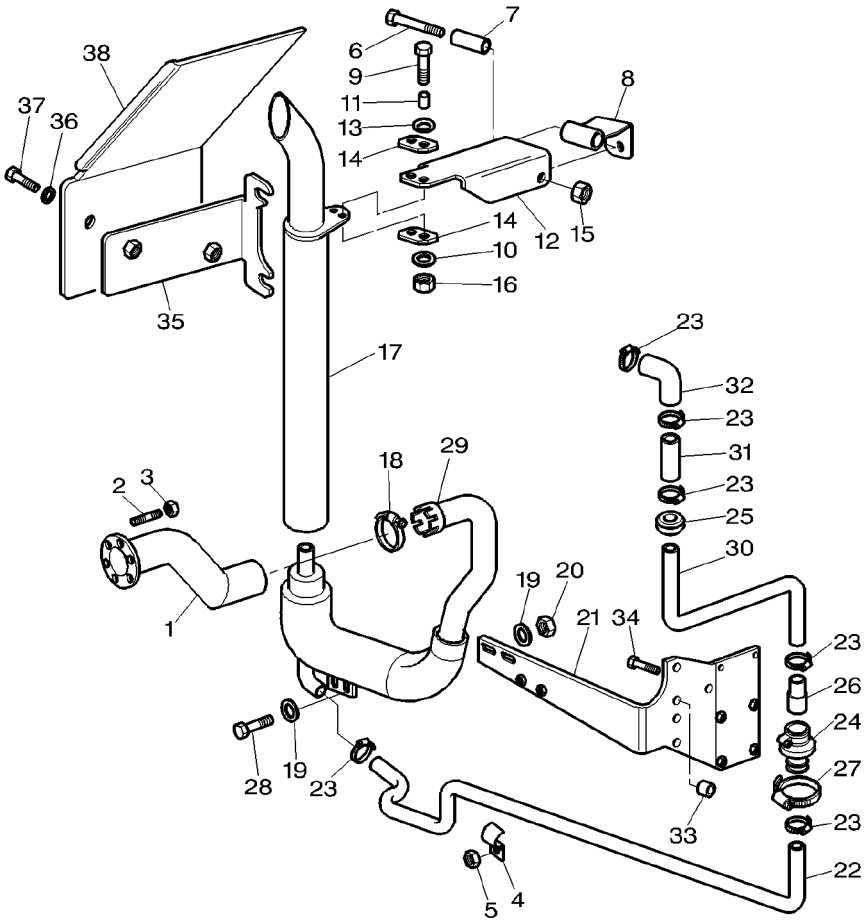

1	3782896M1		**1**	TUBE	TUBE TUBO	ROHR TUBO
2	1440022X1		**6**	STUD	GOUJON PRIGIONIERO	STEHBOLZEN ESPARRAGO
3	3010572X1		**6**	NUT	ECROU DADO	MUTTER TUERCA
4	3713805M1		**1**	BRIDLE	BRIDE BRIGLIA	SPANNBAND BRIDA
5	339169X1		**1**	NUT METRIC	ECROU METRIQUE DADO METRICO	MUTTER METRISCH TUERCA METRICO
6	3009515X1		**1**	BOLT METRIC	BOULON METRIQUE BULLONE METRICO	MASCH.SCHRB MET PERNO METRICO
7	3777839M1		**1**	VIBRATION MOUNT	SILENT BLOC ANTIVIBRANTE	GUMMIMETALL MONTAJE ANTI-VIB
8	3782704M2		**1**	SUPPORT	SUPPORT SUPPORTO	LAGERUNG DISPOS.DE SOSTEN
9	339337X1		**2**	SCREW METRIC	VIS METRIQUE VITE METRICA	SCHRAUBE METR TORNILLO METRICO
10	390972X1		**2**	WASHER METRIC	RONDELLE METR. RONDELLA METRICO	SCHEIBE METRISCH ARANDELA METRICO
11	3778809M1		**2**	SPACER	ENTRETOISE DISTANZIALE	ABSTANDSTUECK PIEZA DISTANCIA
12	3777837M1		**1**	STRAP	PATTE CORREGGIA	LASCHE FAJA
13	3714124M1		**2**	WASHER	RONDELLE RONDELLA	UNTERLEGSCHEIBE ARANDELA
14	3778063M2		**2**	TAPPET PLATE	PLAQUETTE PIASTRA PUNTERIE	STOESSELTELLER PLACA DE VALVULA
15	1442190X1		**1**	NUT METRIC	ECROU METRIQUE DADO METRICO	MUTTER METRISCH TUERCA METRICO
16	1441461X1		**2**	NUT METRIC	ECROU METRIQUE DADO METRICO	MUTTER METRISCH TUERCA METRICO
17	3782533M1	AGCO 0024	**1**	TUBE	TUBE TUBO	ROHR TUBO
18	3780862M1		**1**	CLAMP	COLLIER FASCETTA	HALTESCHELLE ABRAZADERA
19	390972X1		**4**	WASHER METRIC	RONDELLE METR. RONDELLA METRICO	SCHEIBE METRISCH ARANDELA METRICO
20	339169X1		**2**	NUT METRIC	ECROU METRIQUE DADO METRICO	MUTTER METRISCH TUERCA METRICO
21	3782882M2		**1**	SUPPORT	SUPPORT SUPPORTO	LAGERUNG DISPOS.DE SOSTEN
22	3038134M1	◄► 1270MM	**1**	TUBE	TUBE TUBO	ROHR TUBO
23	338616X1		**6**	HOSE CLIP	COLLIER DURITE STRINGITUBO	SCHLAUCHSCHELLE CLIP P.FLEXIBLE
24	3780483M1		**1**	NON RETURN VALVE	CLAPET VALVOLA NO RITOR	RUCKSCHLAGVENTIL VALVULA DE GRANO
25	3778369M2		**1**	GROMMET	PASSE FIL GOMMINO	GUMMITUELLE PASACABLE
26	3782356M1		**1**	ADAPTOR	ADAPTATEUR ADATTATORE	REDUZIERNIPPEL ADAPTADOR

Vertical Exhaust On The Side
Echappement Vertical Lateral
Senkrechtem Seitenauspuff
Scarico Verticale Lateral
Escape Vertical Lano Lateral

10-270

With Dusty Aspiration Up To No
Avec Aspiration De Poussieres Jusqu'Au No
Mit Staub Ansaugen Bis No
Con Aspirazione Di Polvere Fino Alla
Con Aspiracion De Polvo Hasta No

1-ZC11-007-B

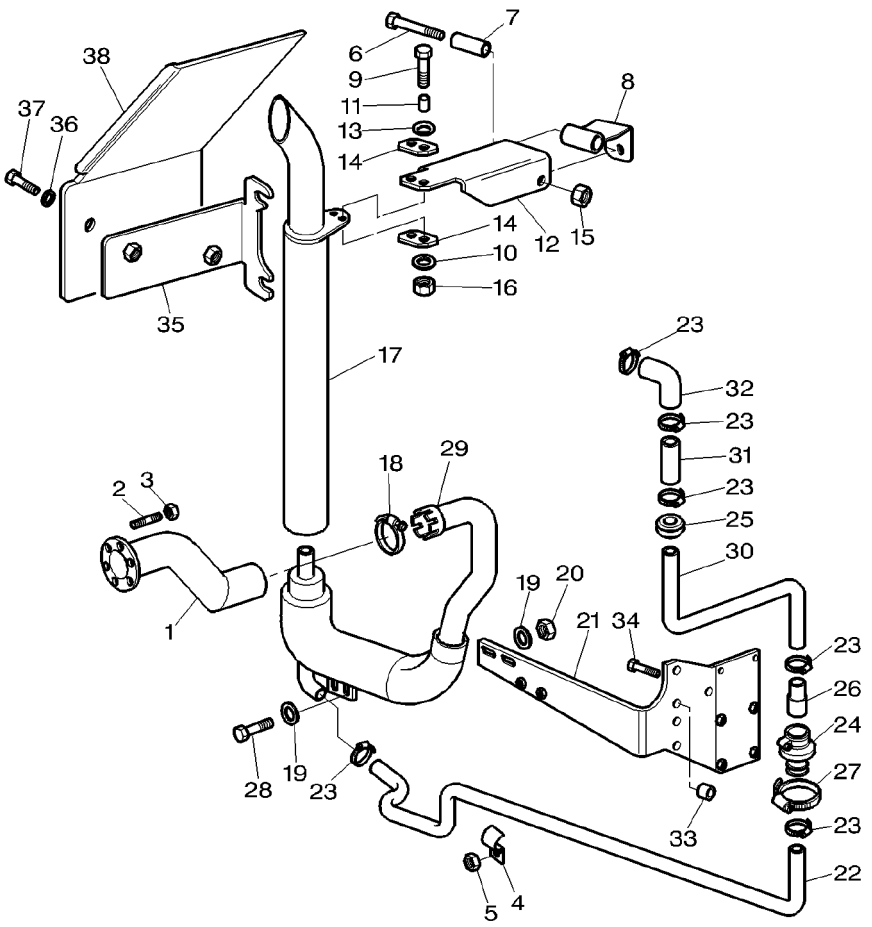

27	1440860X1		**1**	CLAMP	COLLIER FASCETTA	HALTESCHELLE ABRAZADERA
28	339761X1	M8X25	**2**	SCREW METRIC	VIS METRIQUE VITE METRICA	SCHRAUBE METR TORNILLO METRICO
29	3781076M2		**1**	TUBE	TUBE TUBO	ROHR TUBO
30	1625198M1	◄► 2185MM	**1**	HOSE	DURITE TUBO FLESSIBILE	SCHLAUCH FLEXIBLE
31	3777309M1		**1**	TUBE	TUBE TUBO	ROHR TUBO
32	3777308M1		**1**	HOSE	DURITE TUBO FLESSIBILE	SCHLAUCH FLEXIBLE
33	3010942X1	►◄ H200002	**1**	SPACER	ENTRETOISE DISTANZIALE	ABSTANDSTUECK PIEZA DISTANCIA
34	339018X1		**4**	BOLT METRIC	BOULON METRIQUE BULLONE METRICO	MASCH.SCHRB MET PERNO METRICO
35	3781101M2		**1**	SUPPORT	SUPPORT SUPPORTO	LAGERUNG DISPOS.DE SOSTEN
36	390972X1		**2**	WASHER METRIC	RONDELLE METR. RONDELLA METRICO	SCHEIBE METRISCH ARANDELA METRICO
37	339228X1	M8X12	**2**	SCREW METRIC	VIS METRIQUE VITE METRICA	SCHRAUBE METR TORNILLO METRICO
38	3781102M2		**1**	COWL	GARANT CAPPOTTATURA	AUFSATZ CAPERUZA

Vertical Exhaust On The Side
Echappement Vertical Lateral
Senkrechtem Seitenauspuff
Scarico Verticale Lateral
Escape Vertical Lano Lateral

10-275

With Dusty Aspiration From No
Avec Aspiration De Poussieres A Partir Du No
Mit Staub Ansaugen Ab No
Con Aspirazione Di Polvere Dalla No
Con Aspiracion De Polvo A Partir Del No

1-ZC11-020-A

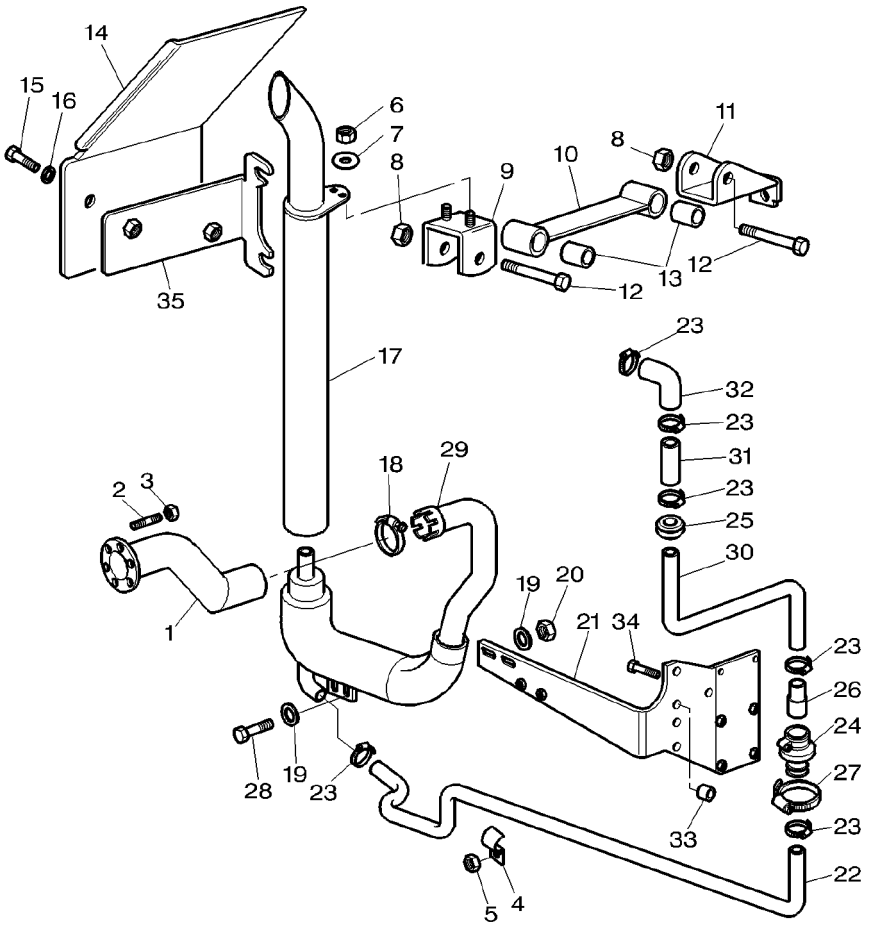

1	3782896M1		1	TUBE	TUBE TUBO ROHR TUBO
2	1440022X1		6	STUD	GOUJON PRIGIONIERO STEHBOLZEN ESPARRAGO
3	3010572X1		6	NUT	ECROU DADO MUTTER TUERCA
4	3713805M1		1	BRIDLE	BRIDE BRIGLIA SPANNBAND BRIDA
5	339169X1		1	NUT METRIC	ECROU METRIQUE DADO METRICO MUTTER METRISCH TUERCA METRICO
6	1441461X1		2	NUT METRIC	ECROU METRIQUE DADO METRICO MUTTER METRISCH TUERCA METRICO
7	391039X1		2	WASHER METRIC	RONDELLE METR. RONDELLA METRICO SCHEIBE METRISCH ARANDELA METRICO
8	1441932X1		2	NUT METRIC	ECROU METRIQUE DADO METRICO MUTTER METRISCH TUERCA METRICO
9	3784049M1		1	PLATE	PLAQUE PIASTRA PLATTE PLATO
10	3784052M1	◄► 181,6MM	1	STRAP	PATTE CORREGGIA LASCHE FAJA
11	3784206M1		1	SUPPORT	SUPPORT SUPPORTO LAGERUNG DISPOS.DE SOSTEN
12	3009498X1	M10X55	2	BOLT METRIC	BOULON METRIQUE BULLONE METRICO MASCH.SCHRB MET PERNO METRICO
13	3784054M1		2	VIBRATION MOUNT	SILENT BLOC ANTIVIBRANTE GUMMIMETALL MONTAJE ANTI-VIB
14	3781102M2		1	COWL	GARANT CAPPOTTATURA AUFSATZ CAPERUZA
15	339228X1	M8X12	2	SCREW METRIC	VIS METRIQUE VITE METRICA SCHRAUBE METR TORNILLO METRICO
16	390972X1		2	WASHER METRIC	RONDELLE METR. RONDELLA METRICO SCHEIBE METRISCH ARANDELA METRICO
17	3782533M1	AGCO 0024	1	TUBE	TUBE TUBO ROHR TUBO
18	3780862M1		1	CLAMP	COLLIER FASCETTA HALTESCHELLE ABRAZADERA
19	390972X1		4	WASHER METRIC	RONDELLE METR. RONDELLA METRICO SCHEIBE METRISCH ARANDELA METRICO
20	339169X1		2	NUT METRIC	ECROU METRIQUE DADO METRICO MUTTER METRISCH TUERCA METRICO
21	3782882M2		1	SUPPORT	SUPPORT SUPPORTO LAGERUNG DISPOS.DE SOSTEN
22	3038134M1	◄► 1270MM	1	TUBE	TUBE TUBO ROHR TUBO
23	338616X1		6	HOSE CLIP	COLLIER DURITE STRINGITUBO SCHLAUCHSCHELLE CLIP P.FLEXIBLE
24	3780483M1		1	NON RETURN VALVE	CLAPET VALVOLA NO RITOR RUCKSCHLAGVENTIL VALVULA DE GRANO
25	3778369M2		1	GROMMET	PASSE FIL GOMMINO GUMMITUELLE PASACABLE
26	3782356M1		1	ADAPTOR	ADAPTATEUR ADATTATORE REDUZIERNIPPEL ADAPTADOR

Vertical Exhaust On The Side
Echappement Vertical Lateral
Senkrechtem Seitenauspuff
Scarico Verticale Lateral
Escape Vertical Lano Lateral

10-275

With Dusty Aspiration From No
Avec Aspiration De Poussieres A Partir Du No
Mit Staub Ansaugen Ab No
Con Aspirazione Di Polvere Dalla No
Con Aspiracion De Polvo A Partir Del No

1-ZC11-020-A

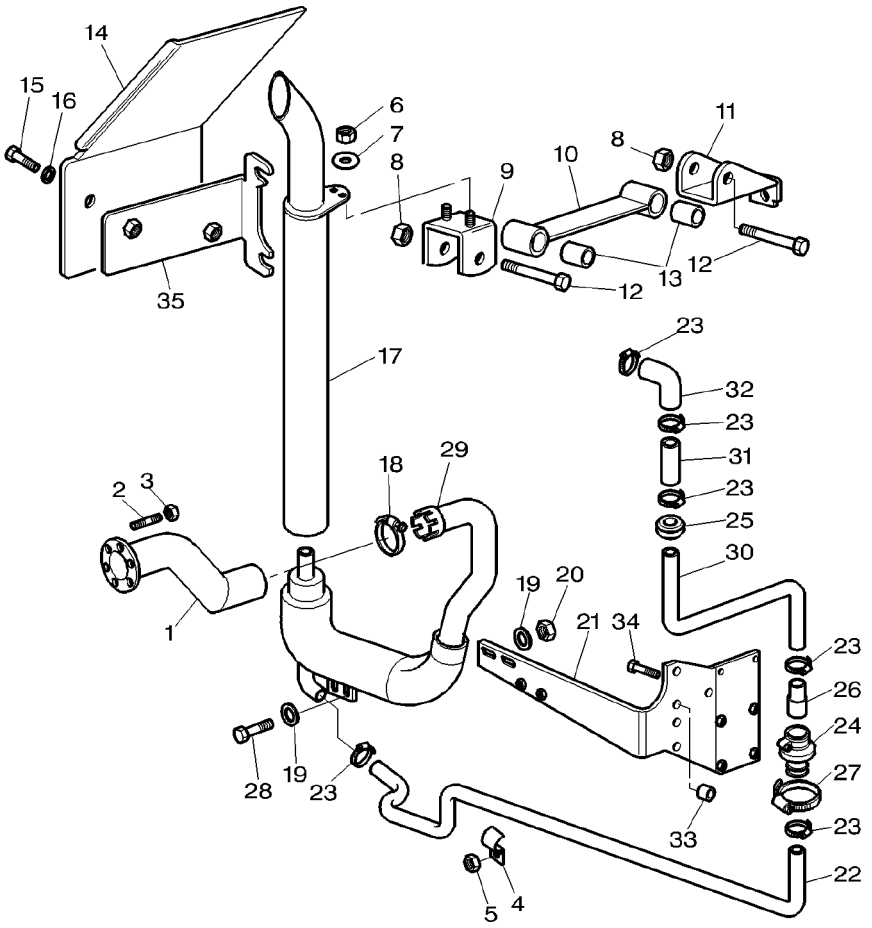

27	1440860X1		**1**	CLAMP	COLLIER FASCETTA	HALTESCHELLE ABRAZADERA
28	339761X1	M8X25	**2**	SCREW METRIC	VIS METRIQUE VITE METRICA	SCHRAUBE METR TORNILLO METRICO
29	3781076M2		**1**	TUBE	TUBE TUBO	ROHR TUBO
30	1625198M1	◄► 2185MM	**1**	HOSE	DURITE TUBO FLESSIBILE	SCHLAUCH FLEXIBLE
31	3777309M1		**1**	TUBE	TUBE TUBO	ROHR TUBO
32	3777308M1		**1**	HOSE	DURITE TUBO FLESSIBILE	SCHLAUCH FLEXIBLE
33	3010942X1		**1**	SPACER	ENTRETOISE DISTANZIALE	ABSTANDSTUECK PIEZA DISTANCIA
34	339018X1		**4**	BOLT METRIC	BOULON METRIQUE BULLONE METRICO	MASCH.SCHRB MET PERNO METRICO
35	3781101M2		**1**	SUPPORT	SUPPORT SUPPORTO	LAGERUNG DISPOS.DE SOSTEN

Vertical Exhaust On The Side
Echappement Vertical Lateral
Senkrechtem Seitenauspuff
Scarico Verticale Lateral
Escape Vertical Lano Lateral

10-280

Mf 8210 Platform
Mf 8210 Plateforme
Mf 8210 Plattform
Mf 8210 Piattaforma
Mf 8210 Plataforma

1-ZC11-010-B

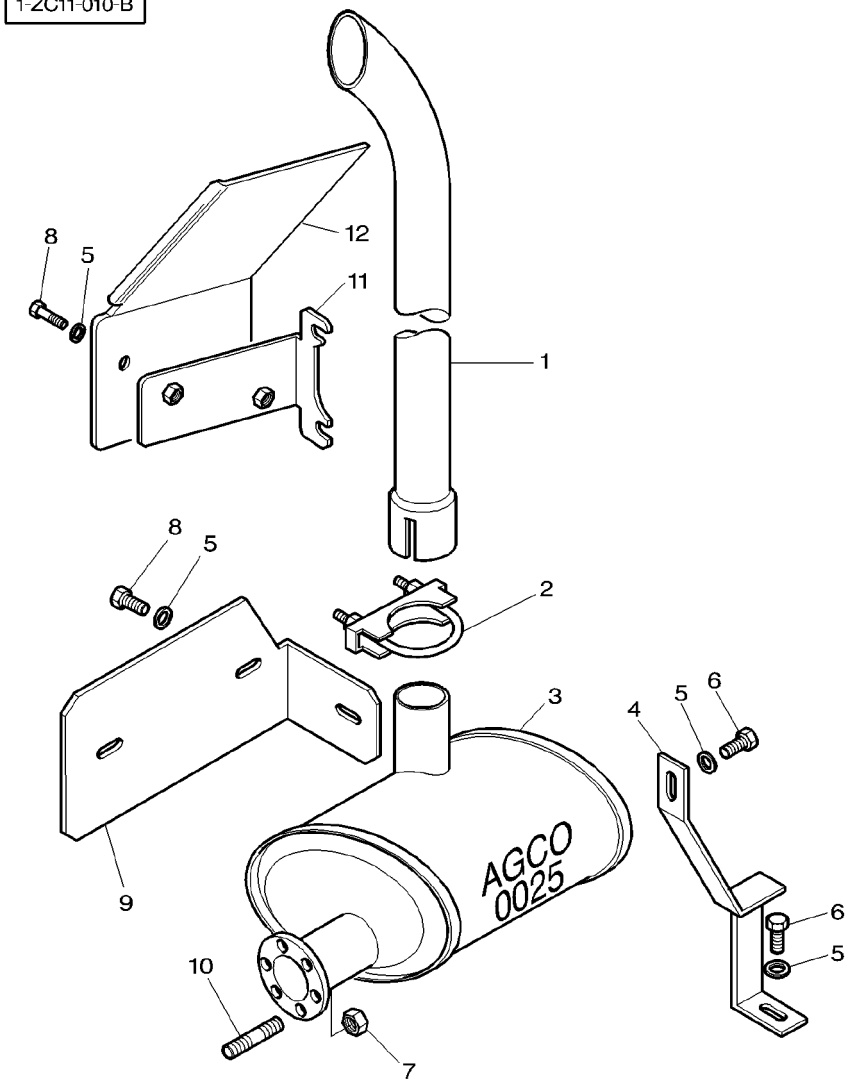

1	3782988M1		**1**	TUBE	TUBE TUBO	ROHR TUBO
2	3619501M1	∅ 75 MM	**1**	CLAMP	COLLIER FASCETTA	HALTESCHELLE ABRAZADERA
3	3782987M1	AGCO 0025	**1**	SILENCER	SILENCIEUX SILENZIATORE	SCHALLDAEMPFER SILENCIADOR
4	3783013M1		**1**	REINFORCEMENT	RENFORT RINFORZO	VERSTAERKUNG REFUERZO
5	390972X1	∅ 8 MM	**6**	WASHER METRIC	RONDELLE METR. RONDELLA METRICO	SCHEIBE METRISCH ARANDELA METRICO
6	3010733X1	M8x20	**2**	SCREW METRIC	VIS METRIQUE VITE METRICA	SCHRAUBE METR TORNILLO METRICO
7	3010572X1	M8	**6**	NUT	ECROU DADO	MUTTER TUERCA
8	339228X1	M8x12	**4**	SCREW METRIC	VIS METRIQUE VITE METRICA	SCHRAUBE METR TORNILLO METRICO
9	3778688M1		**1**	COWL	GARANT CAPPOTTATURA	AUFSATZ CAPERUZA
10	1440022X1	M8X20	**6**	STUD	GOUJON PRIGIONIERO	STEHBOLZEN ESPARRAGO
11	3781101M2		**1**	SUPPORT	SUPPORT SUPPORTO	LAGERUNG DISPOS.DE SOSTEN
12	3781102M2		**1**	COWL	GARANT CAPPOTTATURA	AUFSATZ CAPERUZA

Vertical Exhaust On The Side
Echappement Vertical Lateral
Senkrechtem Seitenauspuff
Scarico Verticale Lateral
Escape Vertical Lano Lateral

10-285

Mf 8220 Platform
Mf 8220 Plateforme
Mf 8220 Plattform
Mf 8220 Piattaforma
Mf 8220 Plataforma

1-ZC11-013-A

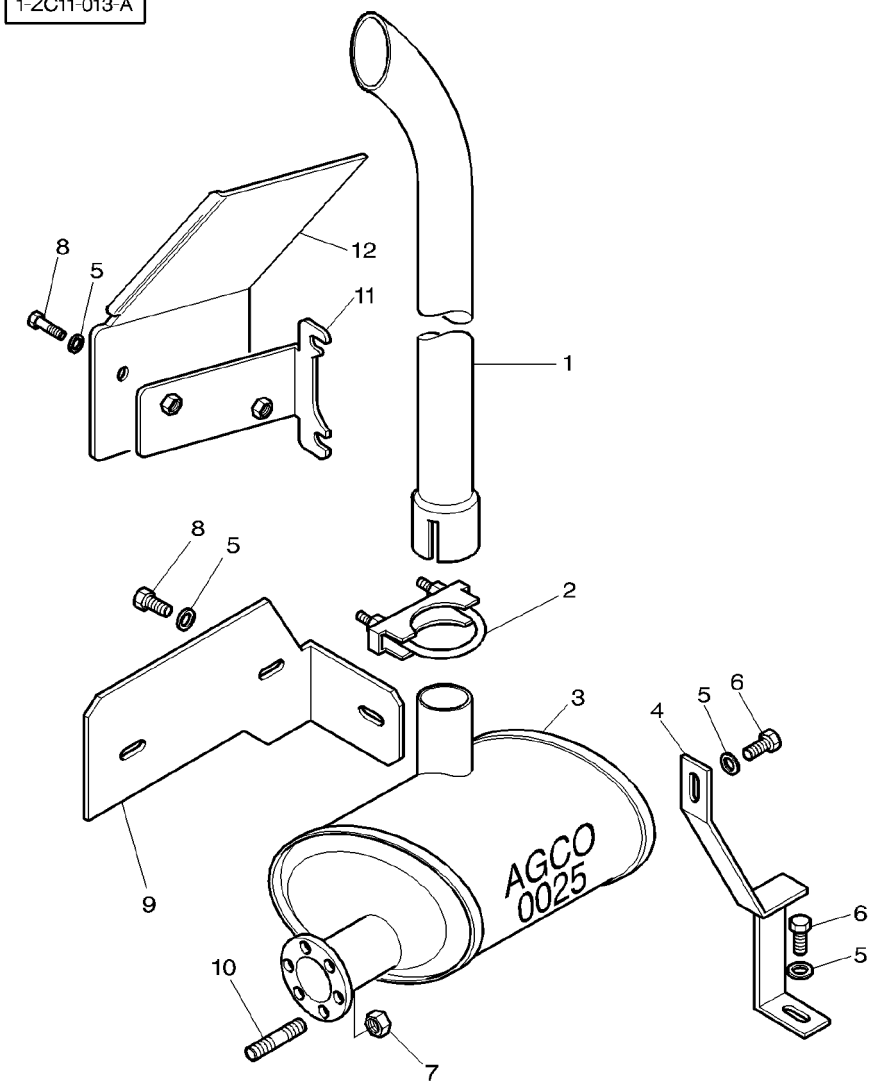

1	3782988M1		**1**	TUBE	TUBE TUBO	ROHR TUBO
2	3619501M1	∅ 75 MM	**1**	CLAMP	COLLIER FASCETTA	HALTESCHELLE ABRAZADERA
3	3782987M1	AGCO 0025	**1**	SILENCER	SILENCIEUX SILENZIATORE	SCHALLDAEMPFER SILENCIADOR
4	3783013M1		**1**	REINFORCEMENT	RENFORT RINFORZO	VERSTAERKUNG REFUERZO
5	390972X1	∅ 8 MM	**6**	WASHER METRIC	RONDELLE METR. RONDELLA METRICO	SCHEIBE METRISCH ARANDELA METRICO
6	3010733X1	M8x20	**2**	SCREW METRIC	VIS METRIQUE VITE METRICA	SCHRAUBE METR TORNILLO METRICO
7	3010572X1	M8	**6**	NUT	ECROU DADO	MUTTER TUERCA
8	339228X1	M8x12	**4**	SCREW METRIC	VIS METRIQUE VITE METRICA	SCHRAUBE METR TORNILLO METRICO
9	3783838M1		**1**	COWL	GARANT CAPPOTTATURA	AUFSATZ CAPERUZA
10	1440022X1	M8X20	**6**	STUD	GOUJON PRIGIONIERO	STEHBOLZEN ESPARRAGO
11	3781101M2		**1**	SUPPORT	SUPPORT SUPPORTO	LAGERUNG DISPOS.DE SOSTEN
12	3781102M2		**1**	COWL	GARANT CAPPOTTATURA	AUFSATZ CAPERUZA

Throttle Controls
Commande D'Acceleration
Kraftstoffregelung
Comandi Acceleratore
Mandos Acelerador

10-290

1-ZC14-002-A

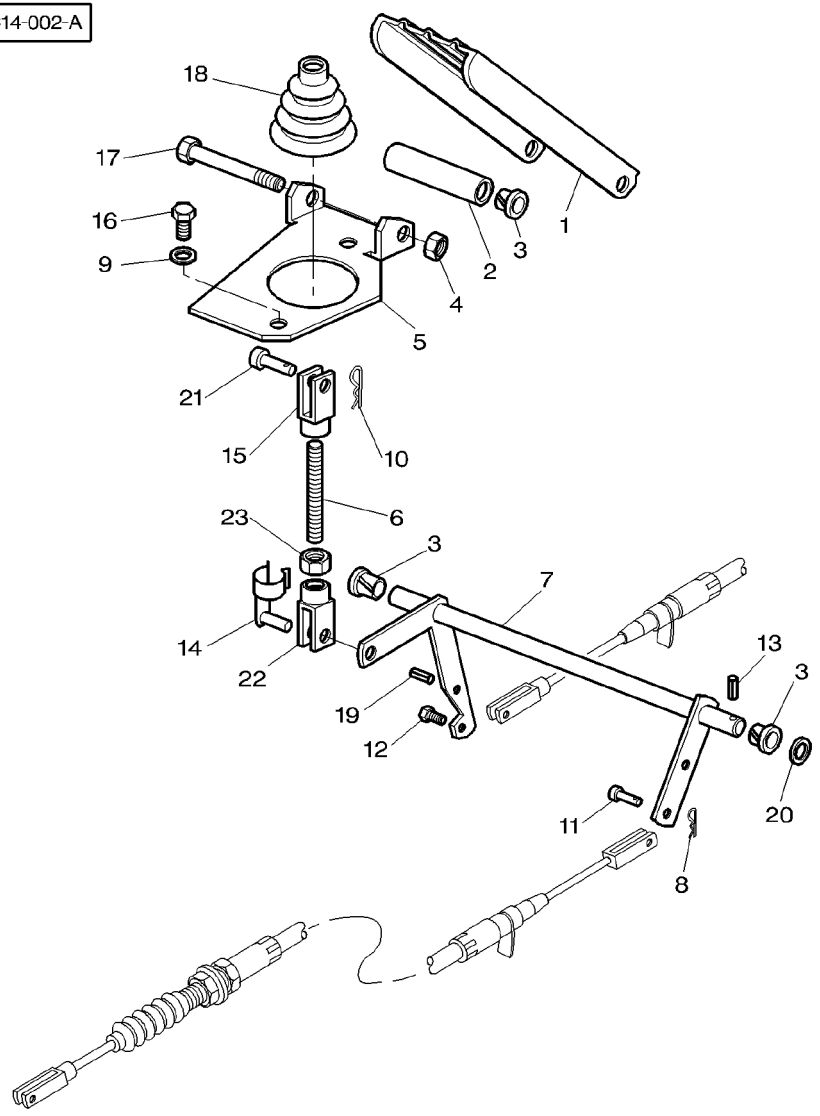

1	3712851M91		**1**	PEDAL	PEDALE	PEDAL
					PEDALE	PEDAL
2	3712867M1		**1**	SPACER	ENTRETOISE	ABSTANDSTUECK
					DISTANZIALE	PIEZA DISTANCIA
3	3385913M2		**4**	BUSH	BAGUE	BUCHSE
					BOCCOLA	CASQUILLO
4	1441461X1		**1**	NUT METRIC	ECROU METRIQUE	MUTTER METRISCH
					DADO METRICO	TUERCA METRICO
5	3712852M2		**1**	SUPPORT	SUPPORT	LAGERUNG
					SUPPORTO	DISPOS.DE SOSTEN
6	3712866M2		**1**	STEM	TIGE	STIEL
					STELO	VASTAGO
7	3779453M91		**1**	ROD	TRINGLE	STANGE
					ASTA	VARILLA
8	357145X1		**1**	PIN	GOUPILLE	BOLZEN
					PERNO	PASADOR
9	390972X1		**2**	WASHER METRIC	RONDELLE METR.	SCHEIBE METRISCH
					RONDELLA METRICO	ARANDELA METRICO
10	357145X1		**1**	PIN	GOUPILLE	BOLZEN
					PERNO	PASADOR
11	3007850X1		**1**	CLEVIS PIN	AXE	SPLINTBOLZEN
					PERNO D'ATTACCO	BULON CILINDRICO
12	391883X1	M5X25	**1**	SCREW	VIS	SCHRAUBE
					VITE	TORNILLO
13	357146X1		**1**	PIN	GOUPILLE	BOLZEN
					PERNO	PASADOR
14	3713042M1		**1**	CLEVIS PIN	AXE	SPLINTBOLZEN
					PERNO D'ATTACCO	BULON CILINDRICO
15	3009130X1		**1**	CLEVIS	CHAPE	GABELSTUECK
					GANCIO D'ATTACCO	GANCHO SEGURI.
16	339124X1	M8X16	**2**	SCREW METRIC	VIS METRIQUE	SCHRAUBE METR
					VITE METRICA	TORNILLO METRICO
17	391286X1	M8X85	**1**	BOLT METRIC	BOULON METRIQUE	MASCH.SCHRB MET
					BULLONE METRICO	PERNO METRICO
18	3712886M1		**1**	BELLOWS	SOUFFLET	FALTENBALG
					SOFFIETTO	FUELLE
19	339548X1		**1**	PIN	GOUPILLE	BOLZEN
					PERNO	PASADOR
20	1444351X1		**1**	WASHER	RONDELLE	UNTERLEGSCHEIBE
					RONDELLA	ARANDELA
21	392235X1		**1**	CLEVIS PIN	AXE	SPLINTBOLZEN
					PERNO D'ATTACCO	BULON CILINDRICO
22	392463X1		**1**	CLEVIS	CHAPE	GABELSTUECK
					GANCIO D'ATTACCO	GANCHO SEGURI.
23	339030X1	M6	**1**	NUT METRIC	ECROU METRIQUE	MUTTER METRISCH
					DADO METRICO	TUERCA METRICO

Throttle Controls
Commande D'Acceleration
Kraftstoffregelung
Comandi Acceleratore
Mandos Acelerador

10-295

Platform
Plateforme
Plattform
Piattaforma
Plataforma

1-ZC14-006-A

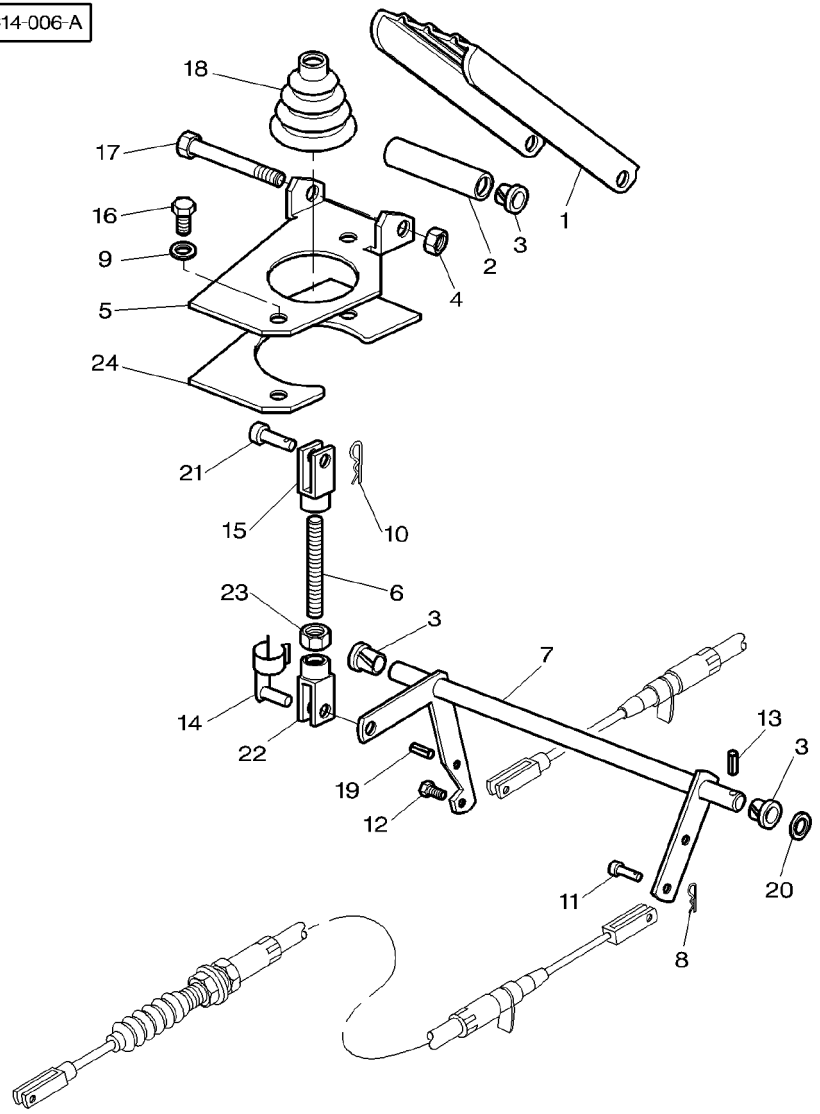

1	3712851M91		1	PEDAL	PEDALE PEDALE
2	3712867M1		1	SPACER	ENTRETOISE DISTANZIALE
3	3385913M2		4	BUSH	BAGUE BOCCOLA
4	1441461X1		1	NUT METRIC	ECROU METRIQUE DADO METRICO
5	3712852M2		1	SUPPORT	SUPPORT SUPPORTO
6	3780098M1	M6X95	1	STEM	TIGE STELO
7	3779453M91		1	ROD	TRINGLE ASTA
8	357145X1		1	PIN	GOUPILLE PERNO
9	390972X1		2	WASHER METRIC	RONDELLE METR. RONDELLA METRICO
10	357145X1		1	PIN	GOUPILLE PERNO
11	3007850X1		1	CLEVIS PIN	AXE PERNO D'ATTACCO
12	391883X1	M5X25	1	SCREW	VIS VITE
13	357146X1		1	PIN	GOUPILLE PERNO
14	3713042M1		1	CLEVIS PIN	AXE PERNO D'ATTACCO
15	3009130X1		1	CLEVIS	CHAPE GANCIO D'ATTACCO
16	339124X1	M8X16	2	SCREW METRIC	VIS METRIQUE VITE METRICA
17	391286X1	M8X85	1	BOLT METRIC	BOULON METRIQUE BULLONE METRICO
18	3712886M1		1	BELLOWS	SOUFFLET SOFFIETTO
19	339548X1		1	PIN	GOUPILLE PERNO
20	1444351X1		1	WASHER	RONDELLE RONDELLA
21	392235X1		1	CLEVIS PIN	AXE PERNO D'ATTACCO
22	392463X1		1	CLEVIS	CHAPE GANCIO D'ATTACCO
23	339030X1	M6	1	NUT METRIC	ECROU METRIQUE DADO METRICO
24	3781488M1		1	CHOCK	CALE PASSACAVO

			1	PEDAL	PEDAL PEDAL
			1	SPACER	ABSTANDSTUECK PIEZA DISTANCIA
			4	BUSH	BUCHSE CASQUILLO
			1	NUT METRIC	MUTTER METRISCH TUERCA METRICO
			1	SUPPORT	LAGERUNG DISPOS.DE SOSTEN
			1	STEM	STIEL VASTAGO
			1	ROD	STANGE VARILLA
			1	PIN	BOLZEN PASADOR
			2	WASHER METRIC	SCHEIBE METRISCH ARANDELA METRICO
			1	PIN	BOLZEN PASADOR
			1	CLEVIS PIN	SPLINTBOLZEN BULON CILINDRICO
			1	SCREW	SCHRAUBE TORNILLO
			1	PIN	BOLZEN PASADOR
			1	CLEVIS PIN	SPLINTBOLZEN BULON CILINDRICO
			1	CLEVIS	GABELSTUECK GANCHO SEGURI.
			2	SCREW METRIC	SCHRAUBE METR TORNILLO METRICO
			1	BOLT METRIC	MASCH.SCHRB MET PERNO METRICO
			1	BELLOWS	FALTENBALG FUELLE
			1	PIN	BOLZEN PASADOR
			1	WASHER	UNTERLEGSCHEIBE ARANDELA
			1	CLEVIS PIN	SPLINTBOLZEN BULON CILINDRICO
			1	CLEVIS	GABELSTUECK GANCHO SEGURI.
			1	NUT METRIC	MUTTER METRISCH TUERCA METRICO
			1	CHOCK	UNTERLEG-KEIL CALZA

Throttle Controls
Commande D'Acceleration
Kraftstoffregelung
Comandi Acceleratore
Mandos Acelerador

10-300

1-ZC14-008-A

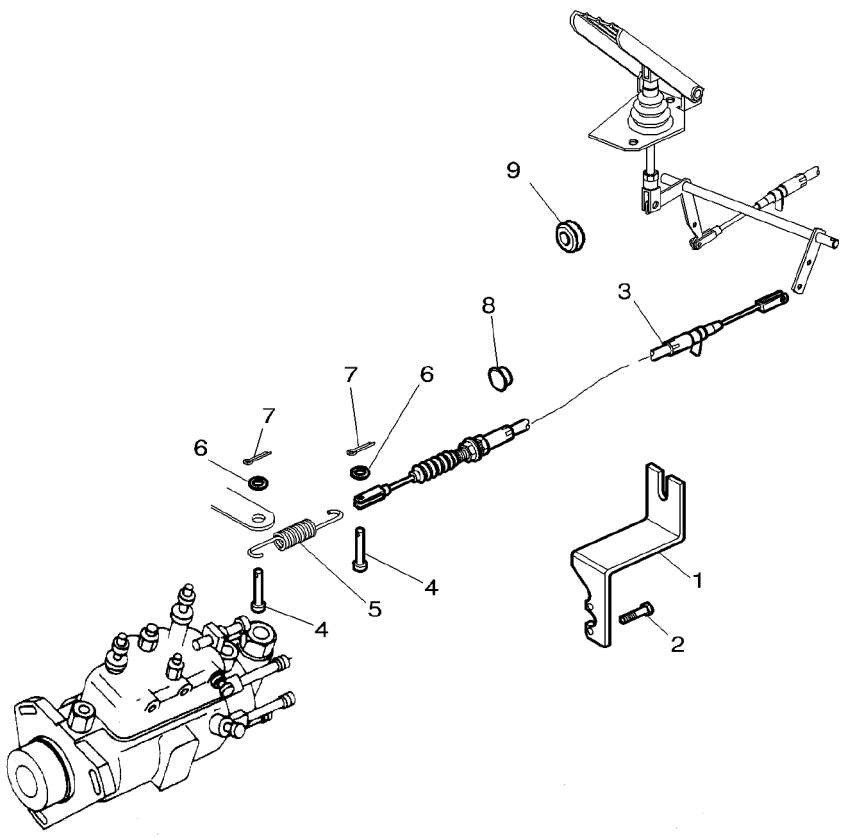

1	3782973M1		**1**	THRUSTER	ARRETOIR SPINGITORE	DRUCKRING PROPULSOR
2	1440350X1	M6X20	**2**	SCREW METRIC	VIS METRIQUE VITE METRICA	SCHRAUBE METR TORNILLO METRICO
3	3713025M6	◄► 945MM	**1**	CABLE	CABLE CAVO	KABEL CABLE
4	832297M1		**2**	CLEVIS PIN	AXE PERNO D'ATTACCO	SPLINTBOLZEN BULON CILINDRICO
5	3581900M1		**1**	SPRING	RESSORT MOLLA	FEDER MUELLE
6	390972X1		**2**	WASHER METRIC	RONDELLE METR. RONDELLA METRICO	SCHEIBE METRISCH ARANDELA METRICO
7	357145X1		**2**	PIN	GOUPILLE PERNO	BOLZEN PASADOR
8	1699748M1	∅ 9,5MM	**2**	PLUG	BOUCHON TAPPO	VERSCHL.STOPFEN TAPON
9	3042523M1	∅ 15MM	**1**	PLUG	BOUCHON TAPPO	VERSCHL.STOPFEN TAPON

Throttle Controls
Commande D'Acceleration
Kraftstoffregelung
Comandi Acceleratore
Mandos Acelerador

10-305

1-ZC14-001-C

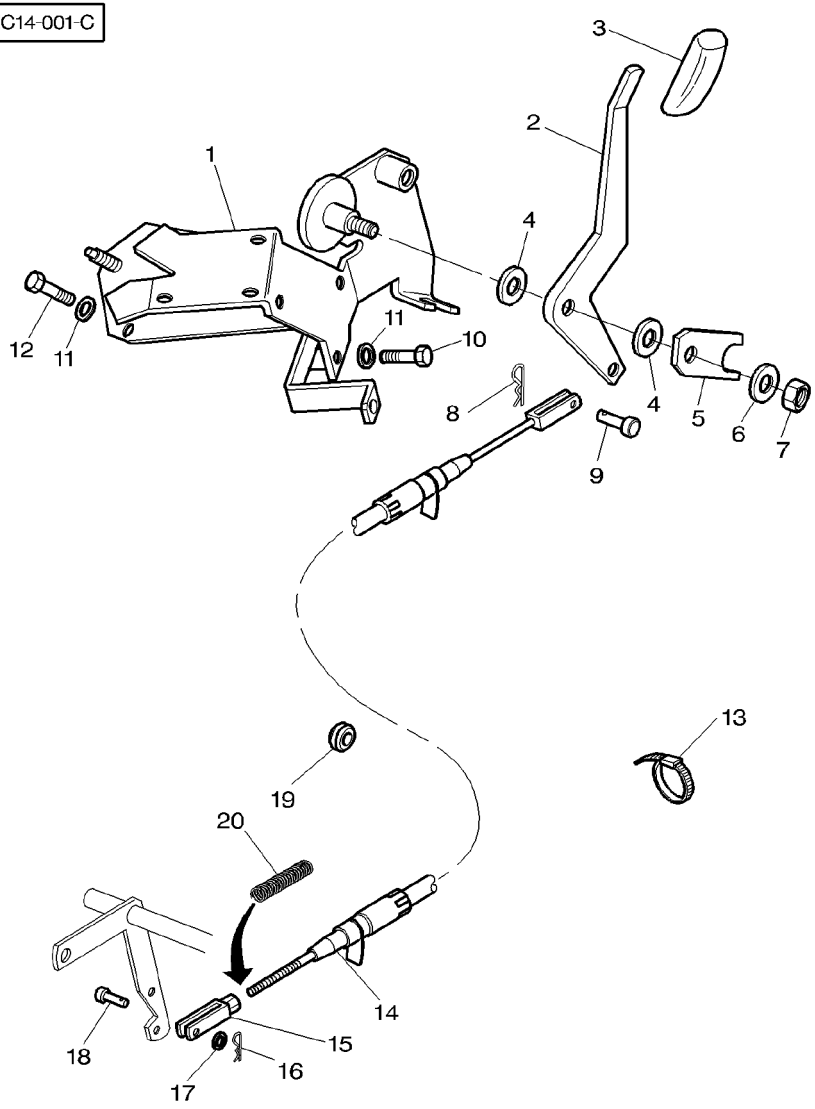

1	3778645M94		**1**	SUPPORT	SUPPORT	LAGERUNG
					SUPPORTO	DISPOS.DE SOSTEN
2	3778583M2		**1**	LEVER	LEVIER	HEBEL
					LEVA	PALANCA
3	3777015M1		**1**	HANDLE	POIGNEE	HANDGRIFF
					MANIGLIA	MANETA
4	3042581M2		**2**	WASHER	RONDELLE	UNTERLEGSCHEIBE
					RONDELLA	ARANDELA
5	3712271M1		**1**	PLATE	PLAQUE	PLATTE
					PIASTRA	PLATO
6	880712M1		**1**	WASHER	RONDELLE	UNTERLEGSCHEIBE
					RONDELLA	ARANDELA
7	1440330X1	M12	**1**	LOCKNUT	ECROU BLOCAGE	FLACHMUTTER
					AUTOBLOCCANTE	CONTRATUERCA
8	357145X1		**1**	PIN	GOUPILLE	BOLZEN
					PERNO	PASADOR
9	3007850X1		**1**	CLEVIS PIN	AXE	SPLINTBOLZEN
					PERNO D'ATTACCO	BULON CILINDRICO
10	339368X1	M8X60	**1**	BOLT METRIC	BOULON METRIQUE	MASCH.SCHRB MET
					BULLONE METRICO	PERNO METRICO
11	390972X1		**3**	WASHER METRIC	RONDELLE METR.	SCHEIBE METRISCH
					RONDELLA METRICO	ARANDELA METRICO
12	339368X1	M8X60	**1**	BOLT METRIC	BOULON METRIQUE	MASCH.SCHRB MET
					BULLONE METRICO	PERNO METRICO
13	3619622M1		**1**	CABLE TIE	ATTACHE CABLE	KABELBINDER
					FASCETTA CAVI	ENLACE DE CABLE
14	3778639M1	◄► 855MM	**1**	CABLE	CABLE	KABEL
					CAVO	CABLE
15	3616399M1		**1**	STIRRUP	ETRIER	BUEGEL
					STAFFA	ESTRIBO
16	357145X1		**1**	PIN	GOUPILLE	BOLZEN
					PERNO	PASADOR
17	390971X1		**1**	WASHER METRIC	RONDELLE METR.	SCHEIBE METRISCH
					RONDELLA METRICO	ARANDELA METRICO
18	832297M1		**1**	CLEVIS PIN	AXE	SPLINTBOLZEN
					PERNO D'ATTACCO	BULON CILINDRICO
19	1699748M1	∅ 9,5MM	**1**	PLUG	BOUCHON	VERSCHL.STOPFEN
					TAPPO	TAPON
20	3784906M1	➡ J147003 ◄► 125MM	**1**	SPRING	RESSORT	FEDER
					MOLLA	MUELLE

Hand Throttle Control	**Platform**	**10-310**
Commande D'Acceleration A Main	**Plateforme**	
Handgas	**Plattform**	
Comando Acceleratore A Mano	**Piattaforma**	
Acelerador Manual	**Plataforma**	

1-ZC63-001-B

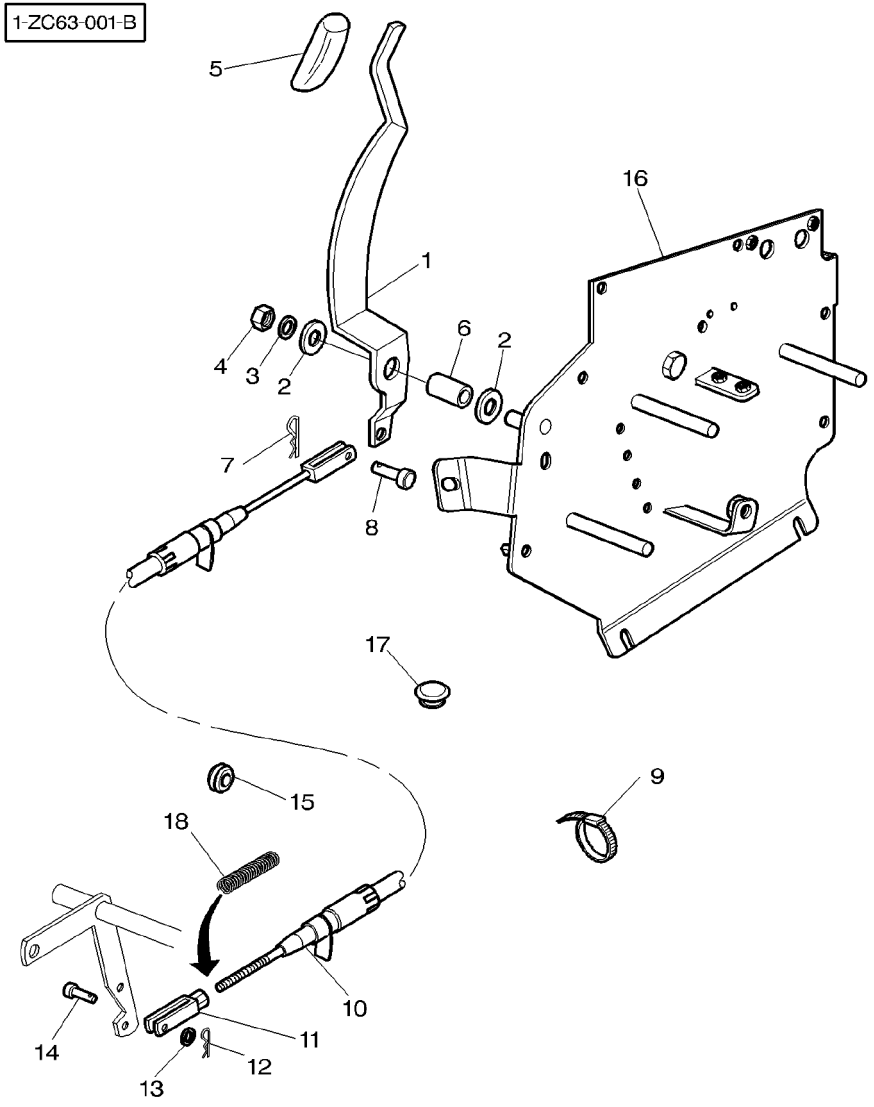

1	3778399M2		**1**	LEVER	LEVIER LEVA	HEBEL PALANCA
2	3042581M2		**2**	WASHER	RONDELLE RONDELLA	UNTERLEGSCHEIBE ARANDELA
3	880712M1		**1**	WASHER	RONDELLE RONDELLA	UNTERLEGSCHEIBE ARANDELA
4	1442190X1	M12	**1**	NUT METRIC	ECROU METRIQUE DADO METRICO	MUTTER METRISCH TUERCA METRICO
5	3777015M1		**1**	HANDLE	POIGNEE MANIGLIA	HANDGRIFF MANETA
6	3778400M1		**1**	SPACER	ENTRETOISE DISTANZIALE	ABSTANDSTUECK PIEZA DISTANCIA
7	357145X1		**1**	PIN	GOUPILLE PERNO	BOLZEN PASADOR
8	832297M1		**1**	CLEVIS PIN	AXE PERNO D'ATTACCO	SPLINTBOLZEN BULON CILINDRICO
9	3619622M1		**1**	CABLE TIE	ATTACHE CABLE FASCETTA CAVI	KABELBINDER ENLACE DE CABLE
10	3778639M1		**1**	CABLE	CABLE CAVO	KABEL CABLE
11	3616399M1		**1**	STIRRUP	ETRIER STAFFA	BUEGEL ESTRIBO
12	357145X1		**1**	PIN	GOUPILLE PERNO	BOLZEN PASADOR
13	390971X1		**1**	WASHER METRIC	RONDELLE METR. RONDELLA METRICO	SCHEIBE METRISCH ARANDELA METRICO
14	832297M1		**1**	CLEVIS PIN	AXE PERNO D'ATTACCO	SPLINTBOLZEN BULON CILINDRICO
15	3580984M1	∅ 21MM	**1**	GROMMET	PASSE FIL GOMMINO	GUMMITUELLE PASACABLE
16	3778407M2		**1**	SHIELD	TOLE RIPARO	SCHILD BLINDAJE
17	1699748M1	∅ 9,5MM	**1**	PLUG	BOUCHON TAPPO	VERSCHL.STOPFEN TAPON
18	3784906M1	J147003 125MM	**1**	SPRING	RESSORT MOLLA	FEDER MUELLE

Flywheel
Volant Moteur
Schwungrad
Volano Motore
Volante De Inercia

20-5

With Dynashift
Avec Dynashift
Mit Dynashift
Con Dynashift
Con Dynashift

1-ZA07-006-C

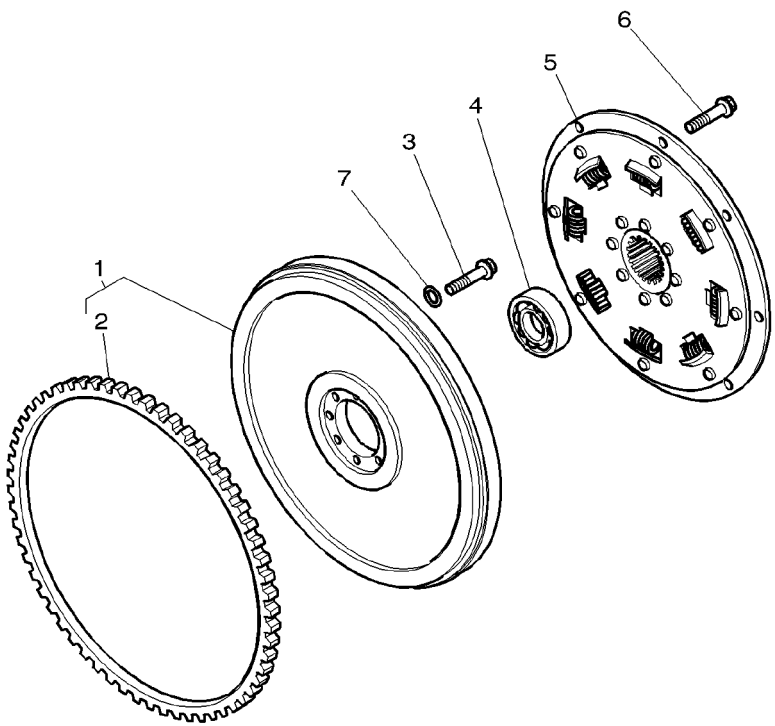

1	3780440M91		**1**	FLYWHEEL	VOLANT MOTEUR VOLANO	SCHWUNGRAD VOLANTE MOTOR
2	**1619032M1**	1	**1**	CROWNWHEEL	COURONNE DENTEE CORONA	TELLERRAD CORONA DENTADA
3	3713984M1	1/2−20X37	**6**	SCREW	VIS VITE	SCHRAUBE TORNILLO
4	**339583X1**		**1**	BEAR. 6206 2RS	RLT 6206 2RS CUSC. 6206 2RS	LAGER 6206 2RS RODA. 6206 2RS
5	3790735M2		**1**	SHOCK ABSORBER	AMORTISSEUR AMMORTIZZATORE	STOSSDAEMPFER AMORTIGUADOR
5	3793648M1	[A]	**1**	SHOCK ABSORBER	AMORTISSEUR AMMORTIZZATORE	STOSSDAEMPFER AMORTIGUADOR
6	3792268M1	M12X45	**8**	SCREW METRIC	VIS METRIQUE VITE METRICA	SCHRAUBE METR TORNILLO METRICO
7	70926191	∅ 13−18,6X1,65	**6**	WASHER	RONDELLE RONDELLA	UNTERLEGSCHEIBE ARANDELA

[A] WITH POWER SHUTTLE
AVEC INVERSEUR SOUS COUPLE
MIT UNTER DREHMOMENT
CON SOTTO COPPIA
CON INVERSOR SUB PAR

Flywheel
Volant Moteur
Schwungrad
Volano Motore
Volante De Inercia

20-10

With Full Powershift
Avec Full Powershift
Mit Full Powershift
Con Full Powershift
Con Full Powershift

1-ZA07-007-C

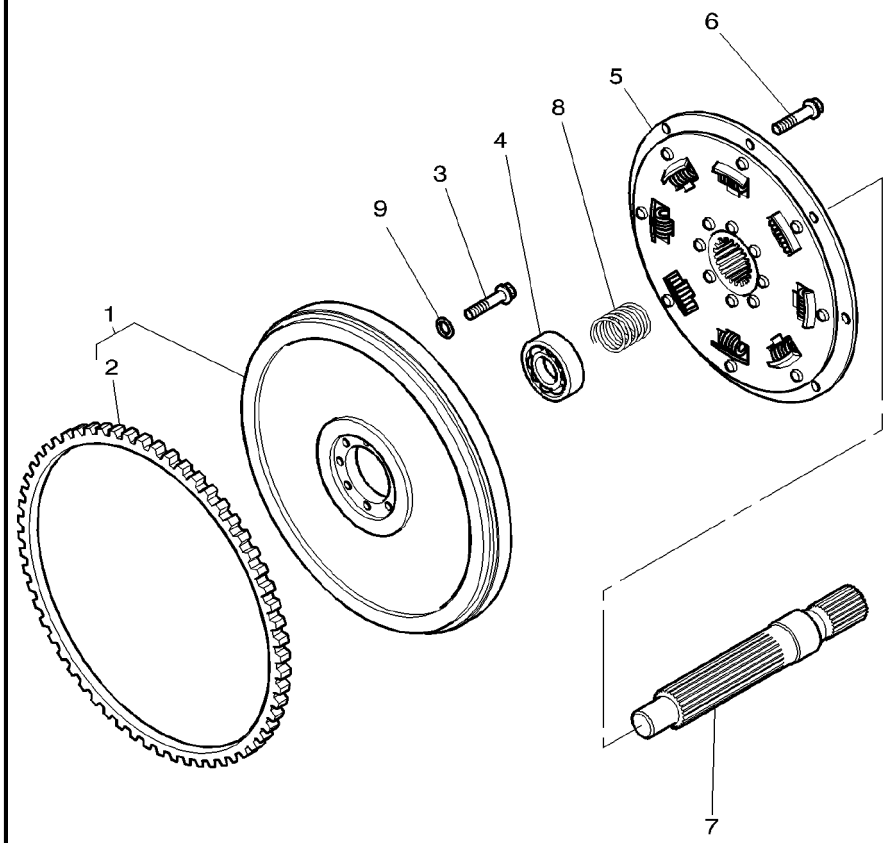

1	3781318M91		**1**	FLYWHEEL	VOLANT MOTEUR VOLANO	SCHWUNGRAD VOLANTE MOTOR
2	**1619032M1**	1 132	**1**	CROWNWHEEL	COURONNE DENTEE CORONA	TELLERRAD CORONA DENTADA
3	3580396M1	1/2−20X48	**6**	SCREW	VIS VITE	SCHRAUBE TORNILLO
4	**339583X1**		**1**	BEAR. 6206 2RS	RLT 6206 2RS CUSC. 6206 2RS	LAGER 6206 2RS RODA. 6206 2RS
5	3792346M1		**1**	SHOCK ABSORBER	AMORTISSEUR AMMORTIZZATORE	STOSSDAEMPFER AMORTIGUADOR
6	3010239X1	M10X45	**8**	SCREW METRIC	VIS METRIQUE VITE METRICA	SCHRAUBE METR TORNILLO METRICO
7	3792344M1		**1**	SHAFT	ARBRE ALBERO	WELLE ARBOL
8	3792345M2		**1**	SPRING	RESSORT MOLLA	FEDER MUELLE
9	70926191	∅ 13−18,6X1,65	**6**	WASHER	RONDELLE RONDELLA	UNTERLEGSCHEIBE ARANDELA

Front Spacer
Carter Entretoise Avant
Vorderer Spacer
Distanziale Anteriore
Espaciador Delantero

20-15

1-ZD02-004-A

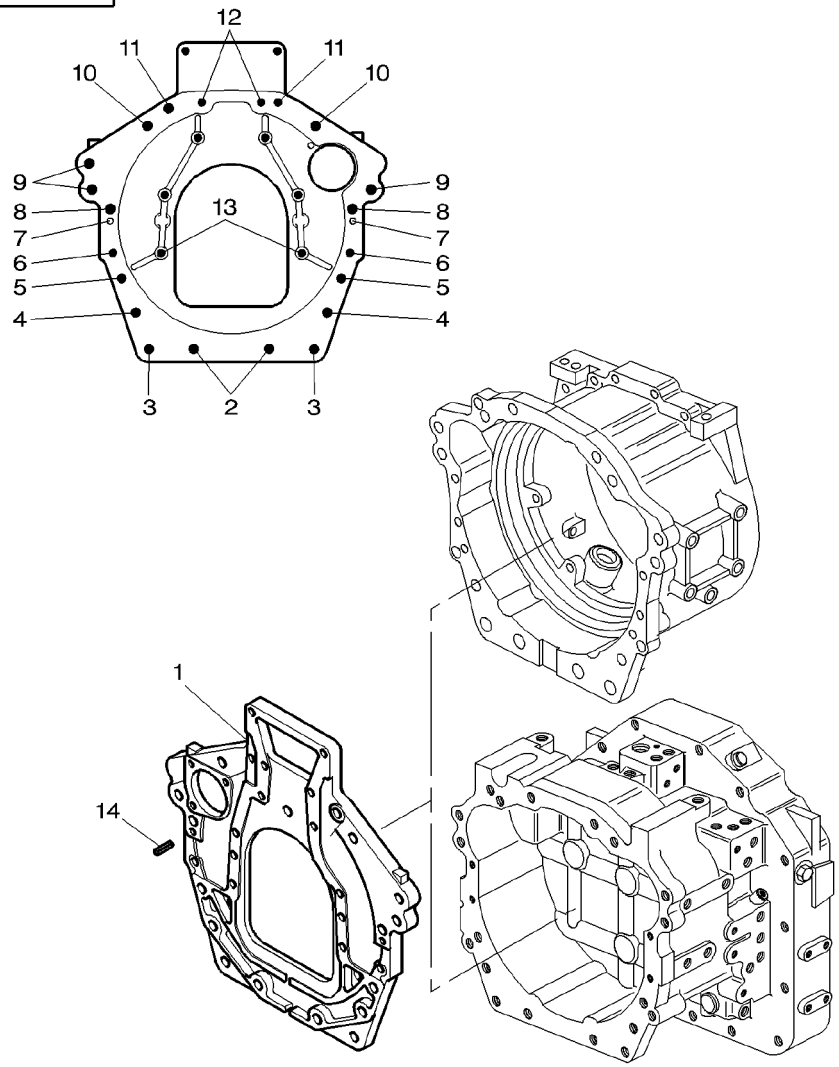

1	3780442M1		**1**	SPACER	ENTRETOISE DISTANZIALE	ABSTANDSTUECK PIEZA DISTANCIA
2	3010452X1	M22X170	**2**	SCREW METRIC	VIS METRIQUE VITE METRICA	SCHRAUBE METR TORNILLO METRICO
2	3010505X1		**2**	WASHER	RONDELLE RONDELLA	UNTERLEGSCHEIBE ARANDELA
2	3581642M1		**2**	NUT	ECROU DADO	MUTTER TUERCA
3	3580796M1	M22X100	**2**	SCREW	VIS VITE	SCHRAUBE TORNILLO
3	3010505X1		**2**	WASHER	RONDELLE RONDELLA	UNTERLEGSCHEIBE ARANDELA
3	3581642M1		**2**	NUT	ECROU DADO	MUTTER TUERCA
4	3580796M1	M22X100	**2**	SCREW	VIS VITE	SCHRAUBE TORNILLO
5	3019901X1	M16X140	**2**	SCREW METRIC	VIS METRIQUE VITE METRICA	SCHRAUBE METR TORNILLO METRICO
6	3010010X1	M12X40	**2**	SCREW	VIS VITE	SCHRAUBE TORNILLO
7	191314M1		**2**	CENTRALISER	PION CENTRALIZZATORE	FUEHRUNGSKORB CENTRALIZADOR
8	3019899X1	M12X50	**2**	BOLT METRIC	BOULON METRIQUE BULLONE METRICO	MASCH.SCHRB MET PERNO METRICO
9	3010833X1	M18X60	**3**	SCREW	VIS VITE	SCHRAUBE TORNILLO
10	3384131M1	M16X55	**2**	BOLT METRIC	BOULON METRIQUE BULLONE METRICO	MASCH.SCHRB MET PERNO METRICO
11	3010007X1	M16X60	**2**	SCREW METRIC	VIS METRIQUE VITE METRICA	SCHRAUBE METR TORNILLO METRICO
12	3010010X1	M12X40	**2**	SCREW	VIS VITE	SCHRAUBE TORNILLO
13	3010143X1	M10X40	**6**	SCREW	VIS VITE	SCHRAUBE TORNILLO
14	733680M1		**2**	LOCATOR	PION DE CENTRAGE LOCALIZZATORE	ARRETIERUNG INDIC POSICION

Wet Clutch
Embrayage A Bain D'Huile
Oelbad Scheibenkupplung
Frizione A Bagno D'Olio
Embrague De Discos Sumergidos

20-20

1-ZD11-017-A

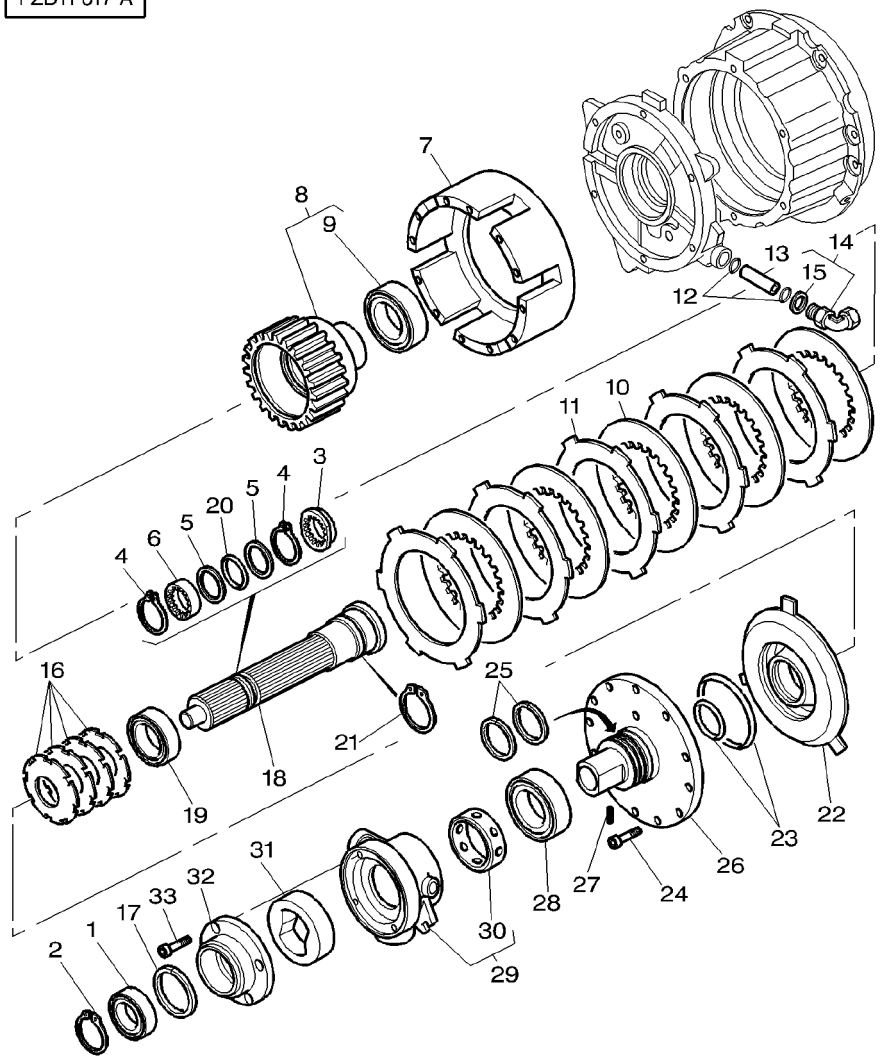

1	3010463X1		**1**	BEARING ASSY	ROULEMENT	RADIALLAGER
					CUSCINETTO COMPL	RODAMIENTO RAD
2	339470X1		**1**	CIRCLIP	SEGMENT D ARRET	SICHERUNGSRING
					ANELLO D'ARRESTO	CIRCULITO
3	3712719M1		**1**	TRAY	PLATEAU	MULDE
					BACINELLA	BANDEJA
4	3010464X1		**2**	CLIP	CLIP	SCHELLE
					FERMAGLIO	CRAPA RETEN
5	3793128M1		**2**	BUSH	BAGUE	BUCHSE
					BOCCOLA	CASQUILLO
6	3712720M2		**1**	SLEEVE	MANCHON	HUELSE
					MANICOTTO	MANCHA
7	3791563M1	[A]	**1**	COVER	COUVERCLE	DECKEL
					COPERCHIO	CUBIERTA
8	3712815M11	[A]	**1**	HUB	MOYEU	NABE
					MOZZO	CUBO
9	3712297M1	8	**1**	BEARING ASSY	ROULEMENT	RADIALLAGER
					CUSCINETTO COMPL	RODAMIENTO RAD
10	3619155M1	[A]	**6**	DISC	DISQUE	SCHEIBE
					DISCO	DISCO
11	3619156M1	[A]	**6**	TRAY	PLATEAU	MULDE
					BACINELLA	BANDEJA
12	377494X1		**2**	O RING	JOINT TORIQUE	O-RING
					ANELLO OR	JUNTA TORICA
13	3619629M1		**1**	TUBE	TUBE	ROHR
					TUBO	TUBO
14	3793447M91		**1**	UNION	RACCORD	VERSCHRAUBUNG
					RACCORDO	RACOR
15	1882958M1	14	**1**	O RING	JOINT TORIQUE	O-RING
					ANELLO OR	JUNTA TORICA
16	3791398M91		**1**	KIT, WASHER	JEU RONDELLES	SATZ SCHEIBEN
					KIT RONDELLA	JUEGO ARANDELAS
17	3900913M91	⧗ 0,05MM ⧗ 2MM	**1**	KIT, SHIMS	JEU CALES	SATZ BEILAGEN
					KIT SPESSORI	JUEGO SUPLEMENTO
18	3791409M4		**1**	SHAFT	ARBRE	WELLE
					ALBERO	ARBOL
19	3712300M1		**1**	BEARING ASSY	ROULEMENT	RADIALLAGER
					CUSCINETTO COMPL	RODAMIENTO RAD
20	3010501X1		**1**	GASKET	JOINT	DICHTSCHEIBE
					GUARNIZIONE	EMPAQUETADURA.
21	391129X1		**1**	CIRCLIP	SEGMENT D ARRET	SICHERUNGSRING
					ANELLO D'ARRESTO	CIRCULITO
22	3791559M1		**1**	PISTON	PISTON	KOLBEN
					PISTONE	PISTON
23	3712819M11		**1**	KIT, JOINT	JEU JOINTS	DICHTUNGSSATZ
					KIT GIUNTO	JUEGO JUNTAS
24	3010493X1	M8X55	**12**	SCREW	VIS	SCHRAUBE
					VITE	TORNILLO
25	3792463M1		**2**	CIRCLIP	SEGMENT D ARRET	SICHERUNGSRING
					ANELLO D'ARRESTO	CIRCULITO
26	3791558M1		**1**	SHAFT	ARBRE	WELLE
					ALBERO	ARBOL

Wet Clutch
Embrayage A Bain D'Huile
Oelbad Scheibenkupplung
Frizione A Bagno D'Olio
Embrague De Discos Sumergidos

20-20

1-ZD11-017-A

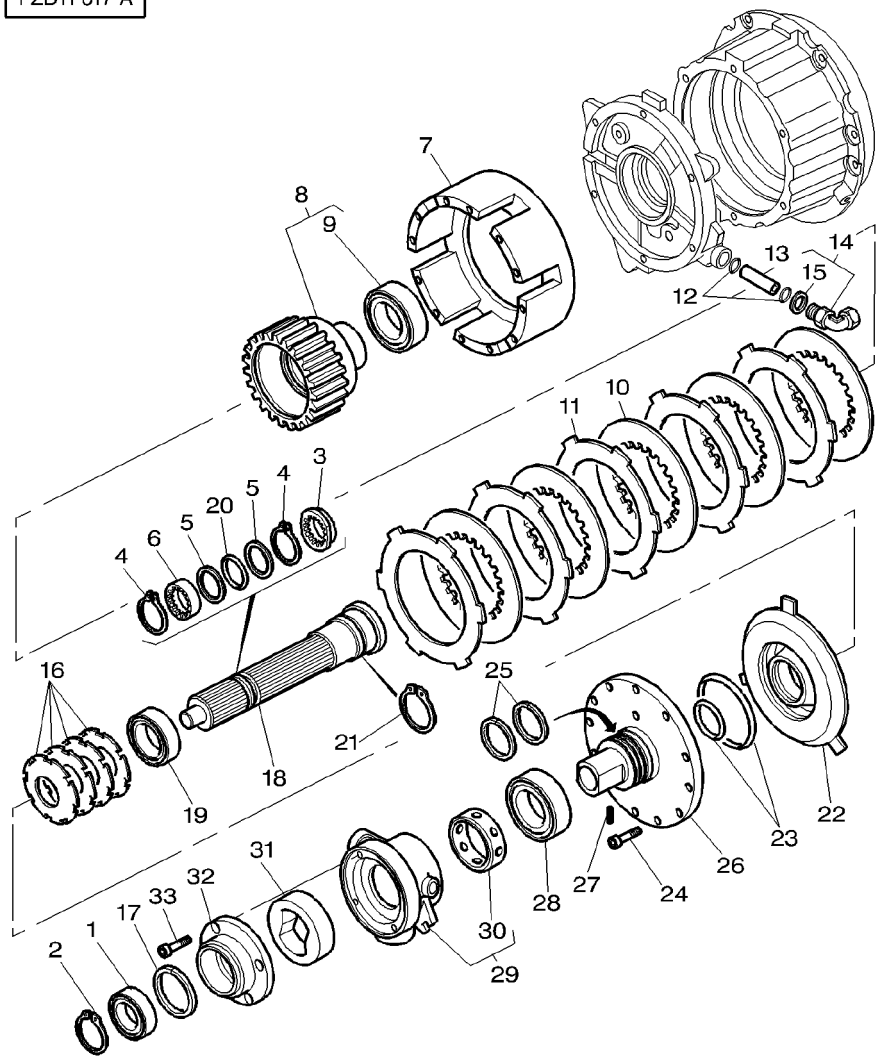

27	3019274X1		
28	3010462X1		
29	3712820M12		
30	3619253M2	29	
31	3619236M1		
32	3619666M1		
33	391989X1	M8X20	

[A] CLUTCH 6 DISCS
EMBRAYAGE 6 DISQUES
KUPPLUNG 6 BREMSSCHEIBES
ACCOPIAMENTO 6 DISCI
EMBRAGUE 6 DISCOS

1	PIN	GOUPILLE PERNO	BOLZEN PASADOR
1	BEARING ASSY	ROULEMENT CUSCINETTO COMPL	RADIALLAGER RODAMIENTO RAD
1	BODY PUMP	CORPS DE POMPE CORPO POMPA	PUMPENGEHAEUSE CUERPO DE BOMBA
1	BUSH	BAGUE BOCCOLA	BUCHSE CASQUILLO
1	PUMP	POMPE POMPA	PUMPE BOMBA
1	COVER	COUVERCLE COPERCHIO	DECKEL CUBIERTA
4	SCREW METRIC	VIS METRIQUE VITE METRICA	SCHRAUBE METR TORNILLO METRICO

Wet Clutch With Power Shuttle
Embrayage A Bain D'Huile Avec Inverseur Sous Couple
Oelbad Scheibenkupplung Mit Unter Drehmoment
Frizione A Bagno D'Olio Con Sotto Coppia
Embrague De Discos Sumergidos Con Inversor Sub Par

20-25

1-ZD13-014-A

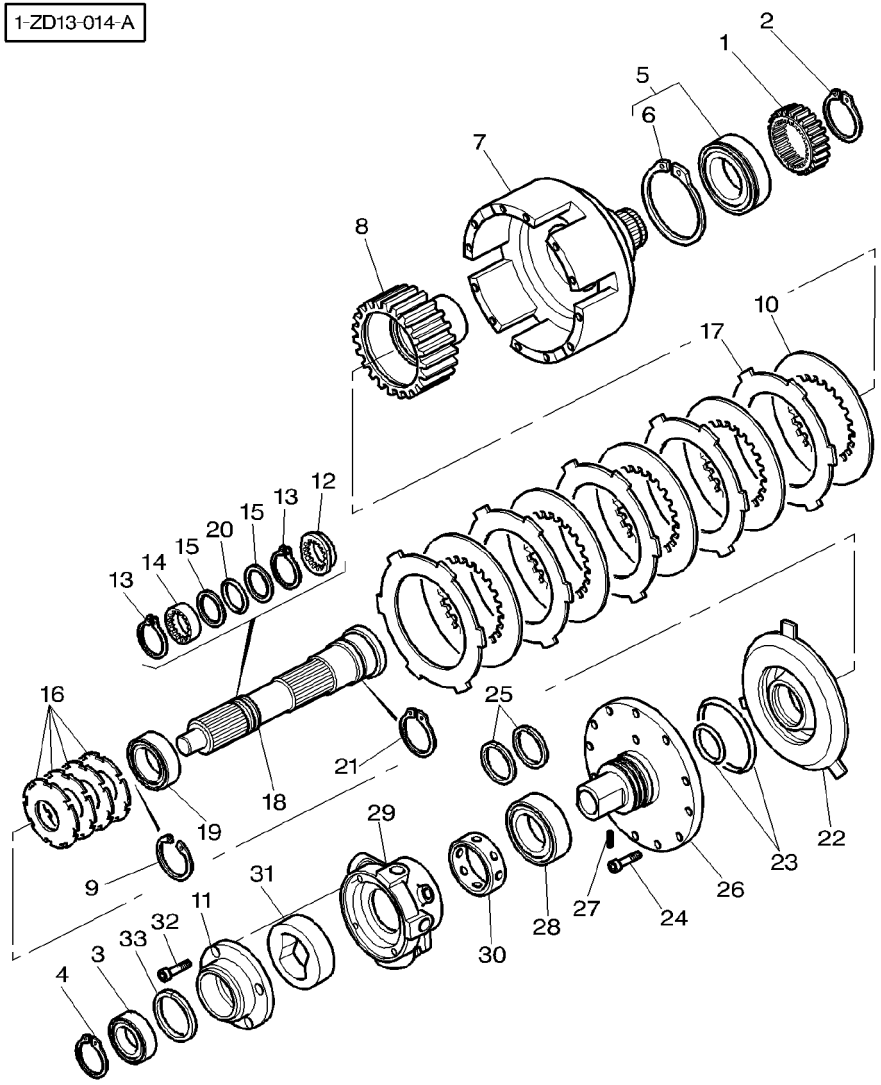

1	3793613M1	48	1	PLANET	PLANETAIRE PLANETARIO	PLANETENRAD PLANETARIO
2	1444488X1		1	RING	ANNEAU ANELLO	RING ARO
3	3010463X1		1	BEARING ASSY	ROULEMENT CUSCINETTO COMPL	RADIALLAGER RODAMIENTO RAD
4	339470X1		1	CIRCLIP	SEGMENT D ARRET ANELLO D'ARRESTO	SICHERUNGSRING CIRCULITO
5	3010839X91		1	BEARING BALL	ROULEMENT BILLES CUSCINETTO SFERE	KUGELLAGER COJINETE DE BOLA
6	3010838X1	5	1	CIRCLIP	SEGMENT D ARRET ANELLO D'ARRESTO	SICHERUNGSRING CIRCULITO
7	3793619M1		1	COVER	COUVERCLE COPERCHIO	DECKEL CUBIERTA
8	3793617M1		1	HUB	MOYEU MOZZO	NABE CUBO
9	1441163X1		1	CIRCLIP	SEGMENT D ARRET ANELLO D'ARRESTO	SICHERUNGSRING CIRCULITO
10	3619155M1		6	DISC	DISQUE DISCO	SCHEIBE DISCO
11	3619666M1		1	COVER	COUVERCLE COPERCHIO	DECKEL CUBIERTA
12	3712719M1		1	TRAY	PLATEAU BACINELLA	MULDE BANDEJA
13	3010464X1		2	CLIP	CLIP FERMAGLIO	SCHELLE CRAPA RETEN
14	3712720M2		1	SLEEVE	MANCHON MANICOTTO	HUELSE MANCHA
15	3793128M1		2	BUSH	BAGUE BOCCOLA	BUCHSE CASQUILLO
16	3791398M91		1	KIT, WASHER	JEU RONDELLES KIT RONDELLA	SATZ SCHEIBEN JUEGO ARANDELAS
17	3619156M1		6	TRAY	PLATEAU BACINELLA	MULDE BANDEJA
18	3793629M1		1	INPUT SHAFT	ARBRE D ENTREE ALBERO ENTRATA	ANTRIEB WELLE EJE PRIMARIO
19	3712300M1		1	BEARING ASSY	ROULEMENT CUSCINETTO COMPL	RADIALLAGER RODAMIENTO RAD
20	3010501X1		1	GASKET	JOINT GUARNIZIONE	DICHTSCHEIBE EMPAQUETADURA.
21	391129X1		1	CIRCLIP	SEGMENT D ARRET ANELLO D'ARRESTO	SICHERUNGSRING CIRCULITO
22	3791559M1		1	PISTON	PISTON PISTONE	KOLBEN PISTON
23	3712819M11		1	KIT, JOINT	JEU JOINTS KIT GIUNTO	DICHTUNGSSATZ JUEGO JUNTAS
24	3010493X1	M8X55	12	SCREW	VIS VITE	SCHRAUBE TORNILLO
25	3792463M1		2	CIRCLIP	SEGMENT D ARRET ANELLO D'ARRESTO	SICHERUNGSRING CIRCULITO
26	3791558M1		1	SHAFT	ARBRE ALBERO	WELLE ARBOL

Wet Clutch With Power Shuttle
Embrayage A Bain D'Huile Avec Inverseur Sous Couple
Oelbad Scheibenkupplung Mit Unter Drehmoment
Frizione A Bagno D'Olio Con Sotto Coppia
Embrague De Discos Sumergidos Con Inversor Sub Par

20-25

1-ZD13-014-A

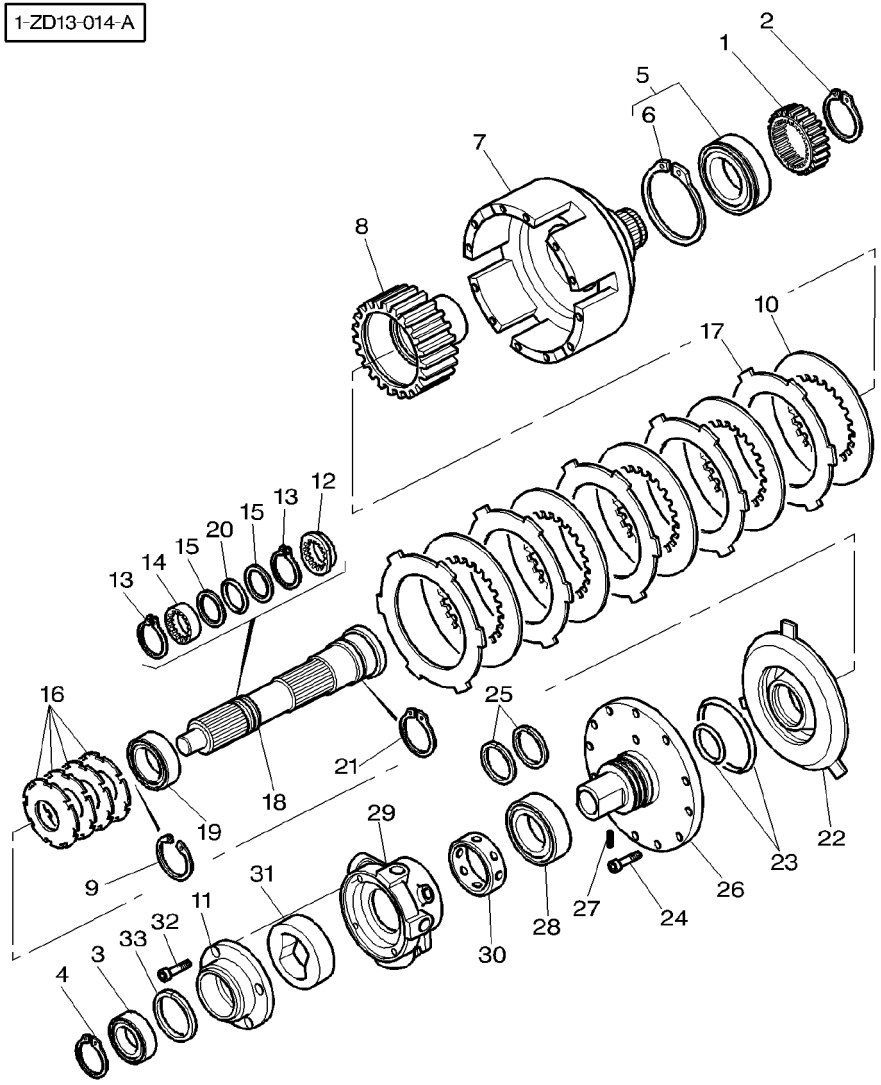

27	3019274X1		**1**	PIN	GOUPILLE PERNO	BOLZEN PASADOR
28	3010462X1		**1**	BEARING ASSY	ROULEMENT CUSCINETTO COMPL	RADIALLAGER RODAMIENTO RAD
29	3793631M1		**1**	BODY PUMP	CORPS DE POMPE CORPO POMPA	PUMPENGEHAEUSE CUERPO DE BOMBA
30	3619253M2		**1**	BUSH	BAGUE BOCCOLA	BUCHSE CASQUILLO
31	3619236M1		**1**	PUMP	POMPE POMPA	PUMPE BOMBA
32	391989X1	M8X20	**4**	SCREW METRIC	VIS METRIQUE VITE METRICA	SCHRAUBE METR TORNILLO METRICO
33	3900913M91	0,05 MM 2 MM	**1**	KIT, SHIMS	JEU CALES KIT SPESSORI	SATZ BEILAGEN JUEGO SUPLEMENTO

Power Shuttle
Inverseur Sous Couple
Unter Drehmoment
Sotto Coppia
Inversor Sub Par

20-30

1-ZF79-002-A

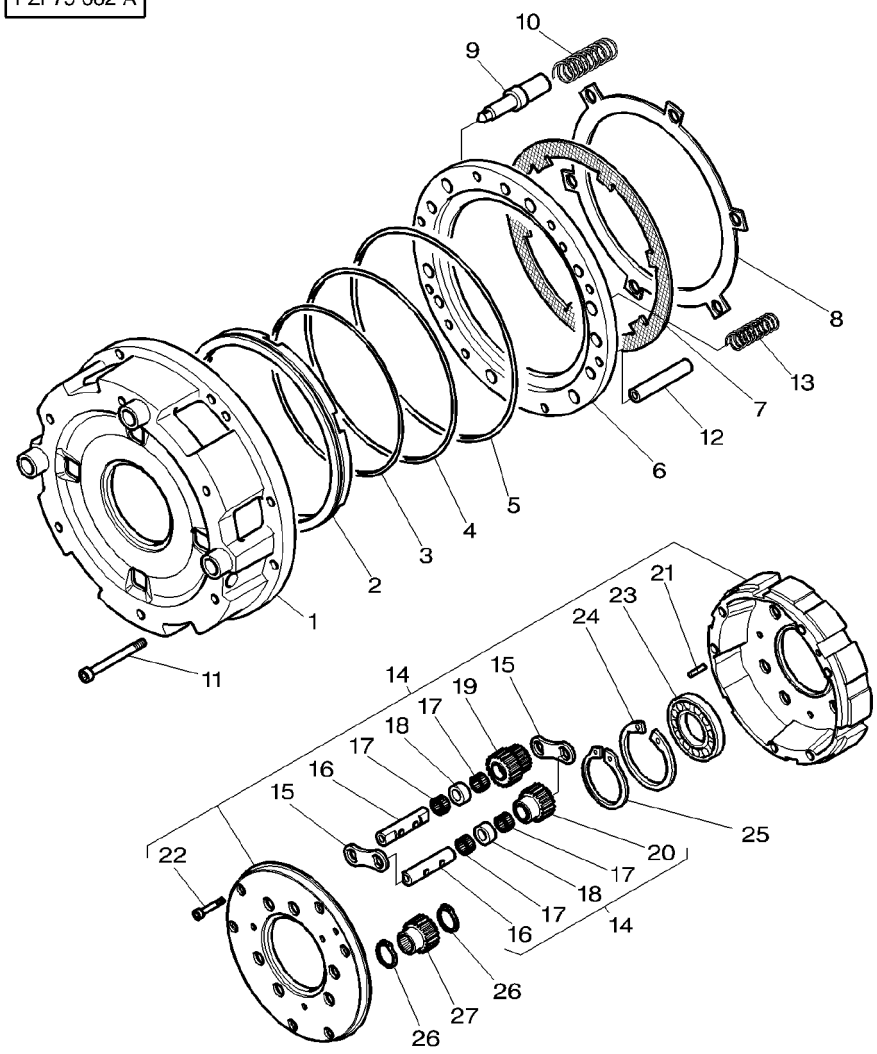

1	3793627M11			**1**	CASE ASSY	BOITIER CARCASSA COMPLET	GEHAEUSE KPL CAJA COMPLETA
2	3793622M1			**1**	PISTON	PISTON PISTONE	KOLBEN PISTON
3	3790324M1			**1**	GASKET	JOINT GUARNIZIONE	DICHTSCHEIBE EMPAQUETADURA.
4	3790323M1			**1**	GASKET	JOINT GUARNIZIONE	DICHTSCHEIBE EMPAQUETADURA.
5	3790325M1			**1**	O RING	JOINT TORIQUE ANELLO OR	O-RING JUNTA TORICA
6	3793624M1			**1**	PISTON	PISTON PISTONE	KOLBEN PISTON
7	3790270M1			**5**	DISC	DISQUE DISCO	SCHEIBE DISCO
8	3790271M1			**4**	TRAY	PLATEAU BACINELLA	MULDE BANDEJA
9	3793630M1			**2**	POPPET	POUSSOIR SUPPORTO VERTIC.	VENTILKEGEL CONTRAPUNTA
10	3790266M2			**2**	SPRING	RESSORT MOLLA	FEDER MUELLE
11	3010989X1	M8X35		**2**	SCREW	VIS VITE	SCHRAUBE TORNILLO
12	3793636M1			**6**	CLEVIS PIN	AXE PERNO D'ATTACCO	SPLINTBOLZEN BULON CILINDRICO
13	3793632M1			**6**	SPRING	RESSORT MOLLA	FEDER MUELLE
14	3793611M11			**1**	CARRIER	PORTE SATELLITES SUPPORTO SATELL.	TRAEGER PORTADOR
15	3790241M1	14		**6**	WEARPLATE	PLAQUE USURE PIASTRA DI USURA	TRAGPLATTE PLACA DE ROCE
16	3793608M11	14		**6**	CLEVIS PIN	AXE PERNO D'ATTACCO	SPLINTBOLZEN BULON CILINDRICO
17	3010127X1	14		**300**	NEEDLE	AIGUILLE AGO	NADEL AGUJA
18	3793606M1	14		**6**	SPACER	ENTRETOISE DISTANZIALE	ABSTANDSTUECK PIEZA DISTANCIA
19	3793610M1	14	24/21	**3**	DIFF PINION	SATELLITE PIGNONE DIFFEREN	DIFF.KEGELRAD PINON DIFERENC
20	3793609M1	14	24	**3**	PINION	PIGNON PIGNONE	RITZEL PINON
21	3010981X1	14		**1**	PIN	GOUPILLE PERNO	BOLZEN PASADOR
22	3010989X1	14	M8X35	**6**	SCREW	VIS VITE	SCHRAUBE TORNILLO
23	3010836X1	14	55X72X9	**1**	BEARING ASSY	ROULEMENT CUSCINETTO COMPL	RADIALLAGER RODAMIENTO RAD
24	1441163X1	14		**1**	CIRCLIP	SEGMENT D ARRET ANELLO D'ARRESTO	SICHERUNGSRING CIRCULITO
25	3010640X1			**1**	RING	ANNEAU ANELLO	RING ARO
26	3010138X1			**2**	SEGMENT	SEGMENT SEGMENTO	SEGMENT SEGMENTO

1-ZF79-002-A

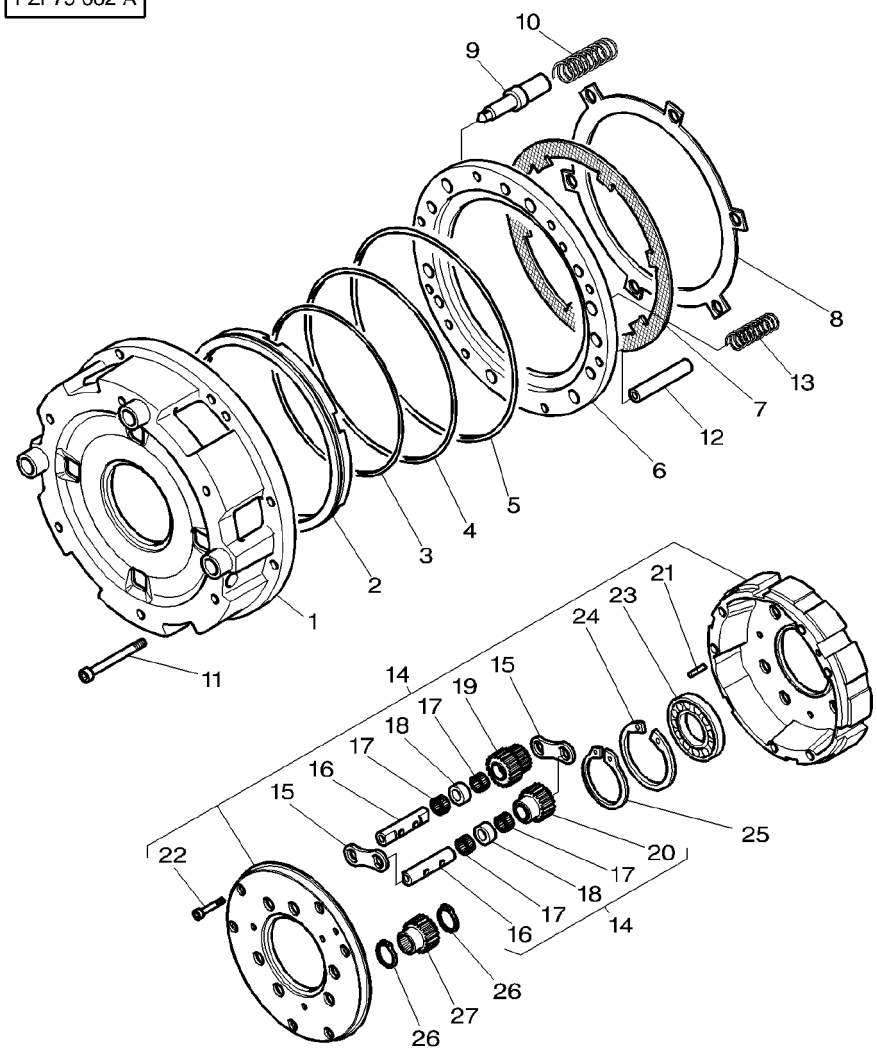

27	3793612M1		42	**1**	PLANET	PLANETAIRE PLANETARIO	PLANETENRAD PLANETARIO

Wet Clutch
Embrayage A Bain D'Huile
Oelbad Scheibenkupplung
Frizione A Bagno D'Olio
Embrague De Discos Sumergidos

20-35

1-ZD11-018-C

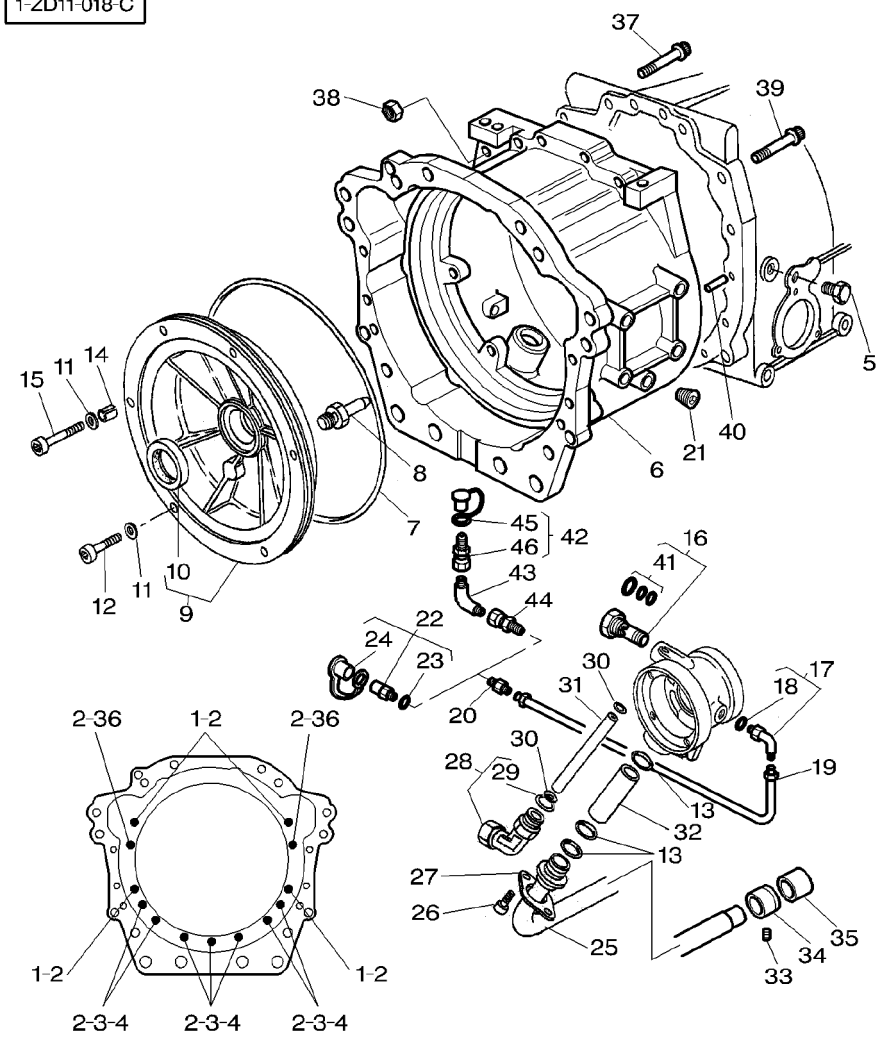

1	3010144X1	M12X45	
2	3385525M2		
3	3019861X1		
4	3019862X1	M12	
5	354700X1	∅ 3/4"−10 ◀▶ 19 MM	
6	3716151M2		
7	3010465X1		
8	3619673M1		
9	3712813M11		
10	**3712304M1**	9	
11	385361X1	∅ 8MM	
12	1440349X1	M8X30	
13	**3010466X1**		
14	3008025X1	∅ 10MM ◀▶ 18MM	
15	3009287X1	M8X40	
16	3619243M2	1,5 BAR	
17	3019408X91		
18	3019393X1	17	
19	3790533M1		
20	3384958M2		
21	356040X1	∅ 1/4"−18	
22	3384950M1	➡| H342036	
23	831452M1	22	
24	3467187M1	22	
25	3716727M92		
26	391989X1	M8X20	

4	SCREW	VIS VITE	SCHRAUBE TORNILLO
13	WASHER	RONDELLE RONDELLA	UNTERLEGSCHEIBE ARANDELA
7	STUD	GOUJON PRIGIONIERO	STEHBOLZEN ESPARRAGO
7	NUT METRIC	ECROU METRIQUE DADO METRICO	MUTTER METRISCH TUERCA METRICO
1	SCREW	VIS VITE	SCHRAUBE TORNILLO
1	SPACER	ENTRETOISE DISTANZIALE	ABSTANDSTUECK PIEZA DISTANCIA
1	GASKET	JOINT GUARNIZIONE	DICHTSCHEIBE EMPAQUETADURA.
1	CLEVIS PIN	AXE PERNO D'ATTACCO	SPLINTBOLZEN BULON CILINDRICO
1	COVER	COUVERCLE COPERCHIO	DECKEL CUBIERTA
1	BUSH	BAGUE BOCCOLA	BUCHSE CASQUILLO
6	WASHER METRIC	RONDELLE METR. RONDELLA METRICO	SCHEIBE METRISCH ARANDELA METRICO
4	SCREW METRIC	VIS METRIQUE VITE METRICA	SCHRAUBE METR TORNILLO METRICO
3	GASKET	JOINT GUARNIZIONE	DICHTSCHEIBE EMPAQUETADURA.
2	PIN	GOUPILLE PERNO	BOLZEN PASADOR
2	SCREW METRIC	VIS METRIQUE VITE METRICA	SCHRAUBE METR TORNILLO METRICO
1	NON RETURN VALVE	CLAPET VALVOLA NO RITOR	RUCKSCHLAGVENTIL VALVULA DE GRANO
1	ELBOW	COUDE GOMITO	WINKELSTUECK CODO
1	O RING	JOINT TORIQUE ANELLO OR	O−RING JUNTA TORICA
1	TUBE	TUBE TUBO	ROHR TUBO
1	UNION	RACCORD RACCORDO	VERSCHRAUBUNG RACOR
1	PLUG	BOUCHON TAPPO	VERSCHL.STOPFEN TAPON
1	PRESSURE INTAKE	PRISE PRESSION PRESA PRESSIONE	ANSAUGDRUCK ENTRADA PRESION
1	O RING	JOINT TORIQUE ANELLO OR	O−RING JUNTA TORICA
1	CAP	CHAPEAU CAPPELLO	KAPPE TAPA
1	TUBE	TUBE TUBO	ROHR TUBO
2	SCREW METRIC	VIS METRIQUE VITE METRICA	SCHRAUBE METR TORNILLO METRICO

Wet Clutch
Embrayage A Bain D'Huile
Oelbad Scheibenkupplung
Frizione A Bagno D'Olio
Embrague De Discos Sumergidos

20-35

1-ZD11-018-C

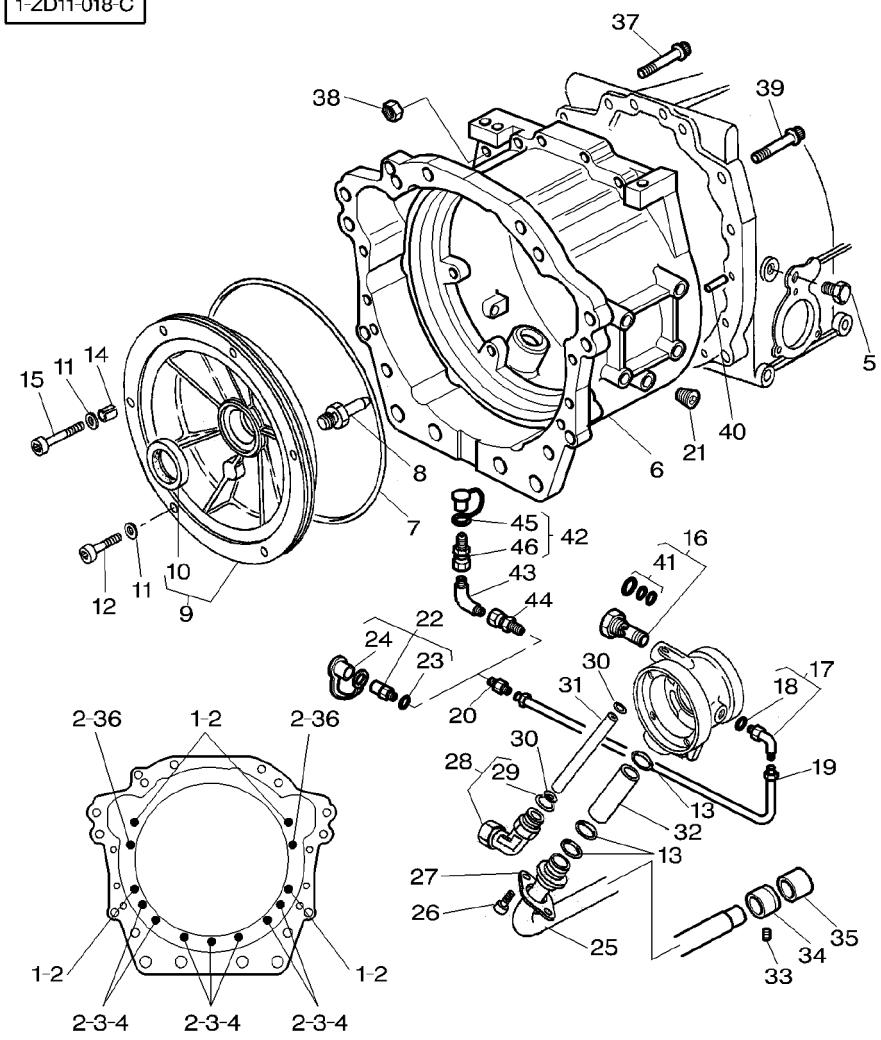

27	3619657M1		
28	3385713M91		
29	**1852568M1**	28	
30	377494X1		
31	3712204M1		
32	3619630M1		
33	3009351X1	M6x8	
34	3712665M1		
35	3712664M1		
36	3019851X1	M12x45	
37	3010426X1	M14x55	
38	3010349X1	M14	
39	3010425X1	M14x45	
40	191314M1		
41	3900995M91	16	
42	3793689M1	➡ H342037	
43	356375X1	➡ H342037	
44	380006X1	➡ H342037	
45	3903586M1	42	
46	3903585M1	42	

1	BRIDLE	BRIDE BRIGLIA	SPANNBAND BRIDA
1	UNION	RACCORD RACCORDO	VERSCHRAUBUNG RACOR
1	O RING	JOINT TORIQUE ANELLO OR	O-RING JUNTA TORICA
2	O RING	JOINT TORIQUE ANELLO OR	O-RING JUNTA TORICA
1	TUBE	TUBE TUBO	ROHR TUBO
1	TUBE	TUBE TUBO	ROHR TUBO
1	SCREW	VIS VITE	SCHRAUBE TORNILLO
1	BUSH	BAGUE BOCCOLA	BUCHSE CASQUILLO
1	BUSH	BAGUE BOCCOLA	BUCHSE CASQUILLO
2	BOLT METRIC	BOULON METRIQUE BULLONE METRICO	MASCH.SCHRB MET PERNO METRICO
5	SCREW	VIS VITE	SCHRAUBE TORNILLO
1	NUT	ECROU DADO	MUTTER TUERCA
1	SCREW	VIS VITE	SCHRAUBE TORNILLO
2	CENTRALISER	PION CENTRALIZZATORE	FUEHRUNGSKORB CENTRALIZADOR
1	KIT, JOINT	JEU JOINTS KIT GIUNTO	DICHTUNGSSATZ JUEGO JUNTAS
1	PRESSURE INTAKE	PRISE PRESSION PRESA PRESSIONE	ANSAUGDRUCK ENTRADA PRESION
1	ELBOW	COUDE GOMITO	WINKELSTUECK CODO
1	UNION	RACCORD RACCORDO	VERSCHRAUBUNG RACOR
1	HELMET	CAPUCHON CASCO	SCHUTZHELM CASCO
1	NON RETURN VALVE	CLAPET VALVOLA NO RITOR	RUCKSCHLAGVENTIL VALVULA DE GRANO

Front Spacer With Power Shuttle
Carter Entretoise Avant Avec Inverseur Sous Couple
Vorderer Spacer Mit Unter Drehmoment
Distanziale Anteriore Con Sotto Coppia
Espaciador Delantero Con Inversor Sub Par

20-40

1-ZD14-002-A

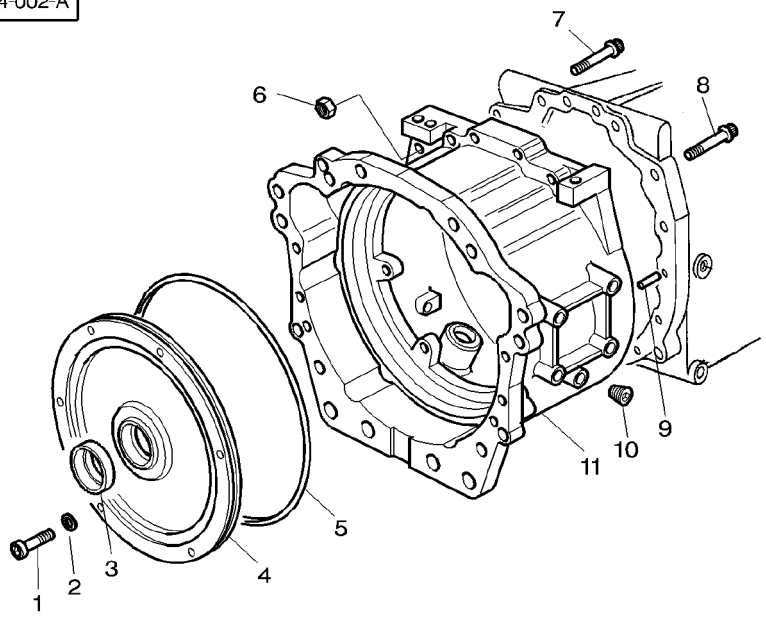

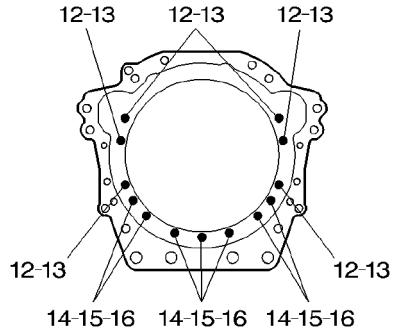

1	3009287X1	M8X40	**2**	SCREW METRIC	VIS METRIQUE VITE METRICA	SCHRAUBE METR TORNILLO METRICO
1	1440349X1	M8X30	**4**	SCREW METRIC	VIS METRIQUE VITE METRICA	SCHRAUBE METR TORNILLO METRICO
2	385361X1		**6**	WASHER METRIC	RONDELLE METR. RONDELLA METRICO	SCHEIBE METRISCH ARANDELA METRICO
3	**3712304M1**		**1**	BUSH	BAGUE BOCCOLA	BUCHSE CASQUILLO
4	3793633M1		**1**	COVER	COUVERCLE COPERCHIO	DECKEL CUBIERTA
5	3010465X1		**1**	GASKET	JOINT GUARNIZIONE	DICHTSCHEIBE EMPAQUETADURA.
6	3010349X1		**1**	NUT	ECROU DADO	MUTTER TUERCA
7	3010426X1	M14X55	**5**	SCREW	VIS VITE	SCHRAUBE TORNILLO
8	3010425X1	M14X45	**1**	SCREW	VIS VITE	SCHRAUBE TORNILLO
9	191314M1		**2**	CENTRALISER	PION CENTRALIZZATORE	FUEHRUNGSKORB CENTRALIZADOR
10	356040X1		**1**	PLUG	BOUCHON TAPPO	VERSCHL.STOPFEN TAPON
11	3793628M1		**1**	SPACER	ENTRETOISE DISTANZIALE	ABSTANDSTUECK PIEZA DISTANCIA
12	3010144X1	M12X45	**6**	SCREW	VIS VITE	SCHRAUBE TORNILLO
13	3385525M2		**6**	WASHER	RONDELLE RONDELLA	UNTERLEGSCHEIBE ARANDELA
14	3019861X1	M12X35	**7**	STUD	GOUJON PRIGIONIERO	STEHBOLZEN ESPARRAGO
15	3385525M2		**7**	WASHER	RONDELLE RONDELLA	UNTERLEGSCHEIBE ARANDELA
16	3019862X1		**7**	NUT METRIC	ECROU METRIQUE DADO METRICO	MUTTER METRISCH TUERCA METRICO

Wet Clutch
Embrayage A Bain D'Huile
Oelbad Scheibenkupplung
Frizione A Bagno D'Olio
Embrague De Discos Sumergidos

20-45

With Dynashift
Avec Dynashift
Mit Dynashift
Con Dynashift
Con Dynashift

1-ZD11-013-A

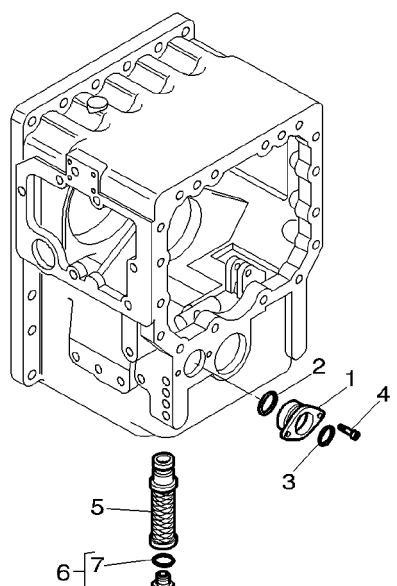

1	3716728M2		**1**	BLOCK	BLOC BLOCCO	BLOCK BLOQUE
2	195654M1		**1**	O RING	JOINT TORIQUE ANELLO OR	O-RING JUNTA TORICA
3	**3010466X1**		**1**	GASKET	JOINT GUARNIZIONE	DICHTSCHEIBE EMPAQUETADURA.
4	1440350X1	M6X20	**2**	SCREW METRIC	VIS METRIQUE VITE METRICA	SCHRAUBE METR TORNILLO METRICO
5	***3712404M1***		**1**	STRAINER	CREPINE COLINO	FILTERSIEB COLADOR
6	380023X91	M42	**1**	PLUG	BOUCHON TAPPO	VERSCHL.STOPFEN TAPON
7	380021X1	6	**1**	GASKET	JOINT GUARNIZIONE	DICHTSCHEIBE EMPAQUETADURA.

Wet Clutch
Embrayage A Bain D'Huile
Oelbad Scheibenkupplung
Frizione A Bagno D'Olio
Embrague De Discos Sumergidos

20-50

Without Dual Control
Sans Dual Control
Ohne Dual Control
Senza Dual Control
Sin Dual Control

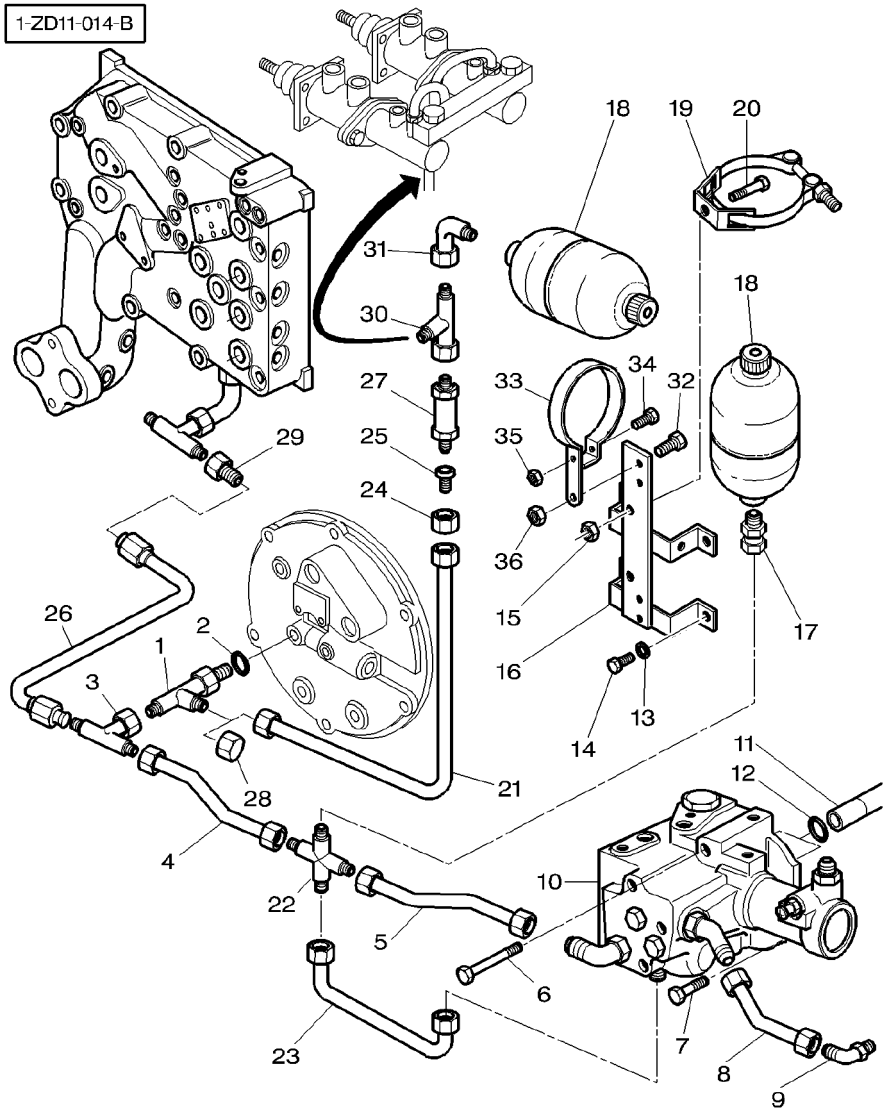

1	3010498X1		**1**	TEEPIECE	TE RACCORDO A T	T-STUECK PIEZA EN T
2	3019395X1		**1**	O RING	JOINT TORIQUE ANELLO OR	O-RING JUNTA TORICA
3	372543X1		**1**	UNION	RACCORD RACCORDO	VERSCHRAUBUNG RACOR
4	3712911M91		**1**	TUBE	TUBE TUBO	ROHR TUBO
5	3712909M91		**1**	TUBE	TUBE TUBO	ROHR TUBO
6	339159X1	M8X65	**1**	BOLT METRIC	BOULON METRIQUE BULLONE METRICO	MASCH.SCHRB MET PERNO METRICO
7	339123X1	M8X20	**2**	SCREW METRIC	VIS METRIQUE VITE METRICA	SCHRAUBE METR TORNILLO METRICO
8	3712906M91		**1**	TUBE	TUBE TUBO	ROHR TUBO
9	3385713M91		**1**	UNION	RACCORD RACCORDO	VERSCHRAUBUNG RACOR
10	3712685M18	H350012 20-75 No 1	**1**	PRESSURE VALVE	VALVE VALVOLA PRESSION	DRUCKVENTIL VALVULA PRESION
10	3793690M11	H350013 20-75 No 1	**1**	PRESSURE VALVE	VALVE VALVOLA PRESSION	DRUCKVENTIL VALVULA PRESION
11	3712358M1		**2**	TUBE	TUBE TUBO	ROHR TUBO
12	377494X1		**4**	O RING	JOINT TORIQUE ANELLO OR	O-RING JUNTA TORICA
13	339328X1	∅ 12MM	**4**	WASHER	RONDELLE RONDELLA	UNTERLEGSCHEIBE ARANDELA
14	354702X1	∅ 3/4"-10 ◀▶ 25 MM	**4**	SCREW	VIS VITE	SCHRAUBE TORNILLO
15	339169X1	M8	**1**	NUT METRIC	ECROU METRIQUE DADO METRICO	MUTTER METRISCH TUERCA METRICO
16	3617708M6		**1**	SUPPORT	SUPPORT SUPPORTO	LAGERUNG DISPOS.DE SOSTEN
17	380018X1		**1**	CONNECTOR	BORNE MORSETTO	DOPPELNIPPEL CONECTOR
18	**3619551M1**		**2**	ACCUMULATOR	ACCUMULATEUR ACCUMULATORE	AKKUMULATOR ACUMULADOR
19	3619807M1		**1**	BRIDLE	BRIDE BRIGLIA	SPANNBAND BRIDA
20	339124X1	M8X16	**1**	SCREW METRIC	VIS METRIQUE VITE METRICA	SCHRAUBE METR TORNILLO METRICO
21	3792926M1	[A]	**1**	TUBE	TUBE TUBO	ROHR TUBO
22	3791468M91		**1**	UNION	RACCORD RACCORDO	VERSCHRAUBUNG RACOR
23	**3713633M1**		**1**	TUBE	TUBE TUBO	ROHR TUBO
24	195960M1		**1**	NUT	ECROU DADO	MUTTER TUERCA
25	356627X1		**1**	ADAPTOR	ADAPTATEUR ADATTATORE	REDUZIERNIPPEL ADAPTADOR

Wet Clutch
Embrayage A Bain D'Huile
Oelbad Scheibenkupplung
Frizione A Bagno D'Olio
Embrague De Discos Sumergidos

20-50

Without Dual Control
Sans Dual Control
Ohne Dual Control
Senza Dual Control
Sin Dual Control

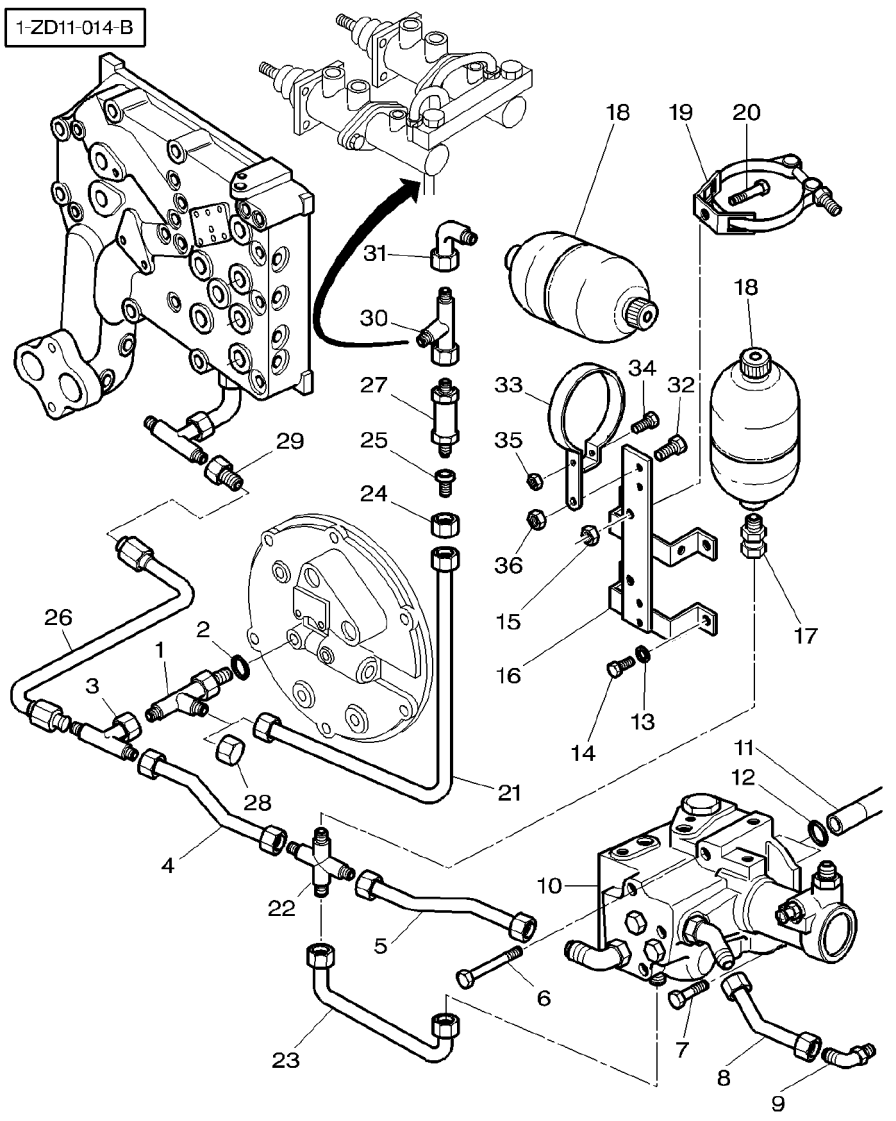

26	3716171M92		**1**	TUBE	TUBE TUBO	ROHR TUBO
27	3790409M1		**1**	NON RETURN VALVE	CLAPET VALVOLA NO RITOR	RUCKSCHLAGVENTIL VALVULA DE GRANO
28	356579X1		**1**	CAP	CHAPEAU CAPPELLO	KAPPE TAPA
29	377651X1		**1**	REDUCER	REDUCTEUR RIDUTTORE	REDUZIERSTUECK REDUCTOR
30	364735X1		**1**	UNION	RACCORD RACCORDO	VERSCHRAUBUNG RACOR
31	380009X1		**1**	UNION	RACCORD RACCORDO	VERSCHRAUBUNG RACOR
32	339123X1	M8X20	**1**	SCREW METRIC	VIS METRIQUE VITE METRICA	SCHRAUBE METR TORNILLO METRICO
33	3790442M1		**1**	COLLAR	COLLERETTE COLLARE	FLANSCHRING COLLAR
34	339262X1	M6X30	**1**	BOLT METRIC	BOULON METRIQUE BULLONE METRICO	MASCH.SCHRB MET PERNO METRICO
35	1441462X1		**1**	LOCKNUT	ECROU BLOCAGE AUTOBLOCCANTE	FLACHMUTTER CONTRATUERCA
36	1441461X1		**1**	NUT METRIC	ECROU METRIQUE DADO METRICO	MUTTER METRISCH TUERCA METRICO

[A] WITH ASSISTED BRAKE
AVEC FREIN ASSISTE
MIT HILSKRAFTBREMSE
CON FRENO ASSISTITE
CON FRENO ASISTIDE

Wet Clutch With Power Shuttle
Embrayage A Bain D'Huile Avec Inverseur Sous Couple
Oelbad Scheibenkupplung Mit Unter Drehmoment
Frizione A Bagno D'Olio Con Sotto Coppia
Embrague De Discos Sumergidos Con Inversor Sub Par

20-55

1-ZD13-013-A

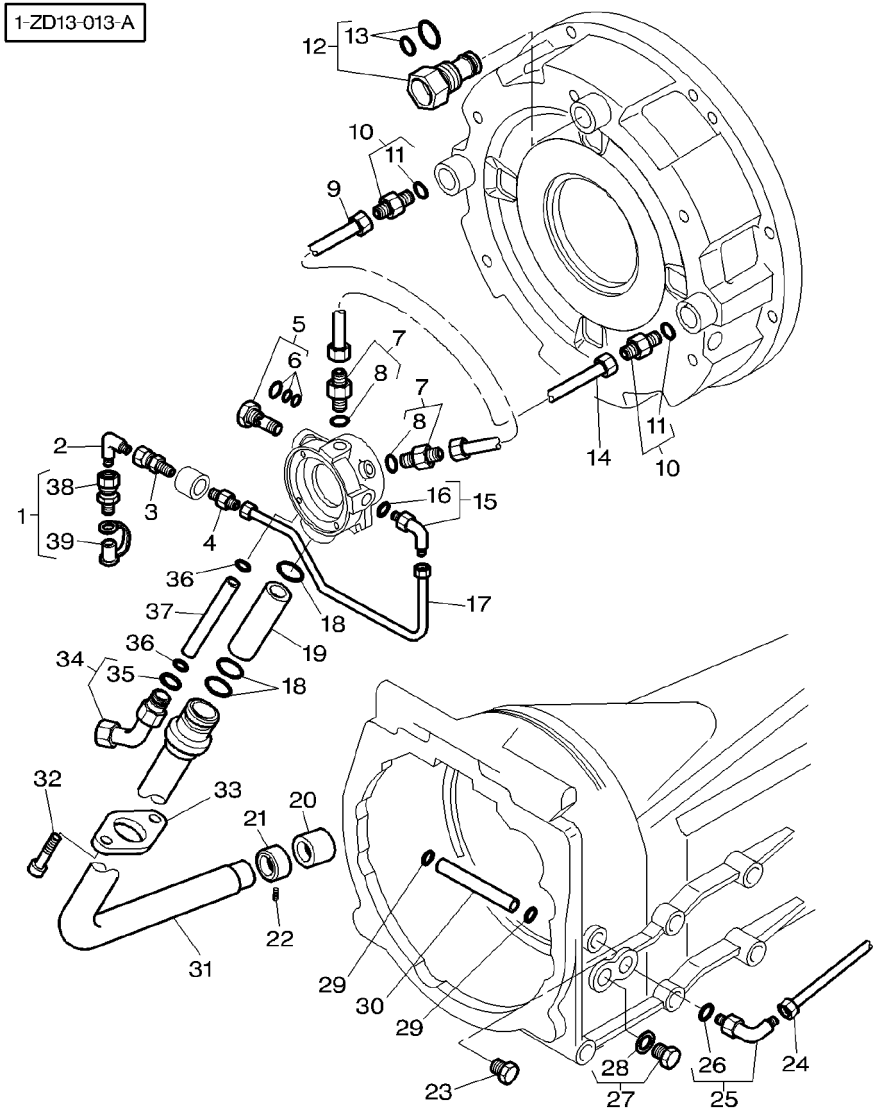

1	3793689M2		**1**	PRESSURE INTAKE	PRISE PRESSION PRESA PRESSIONE	ANSAUGDRUCK ENTRADA PRESION
2	356375X1		**1**	ELBOW	COUDE GOMITO	WINKELSTUECK CODO
3	380006X1		**1**	UNION	RACCORD RACCORDO	VERSCHRAUBUNG RACOR
4	3384958M2		**1**	UNION	RACCORD RACCORDO	VERSCHRAUBUNG RACOR
5	3619243M2		**1**	NON RETURN VALVE	CLAPET VALVOLA NO RITOR	RUCKSCHLAGVENTIL VALVULA DE GRANO
6	3900995M91	5	**1**	KIT, JOINT	JEU JOINTS KIT GIUNTO	DICHTUNGSSATZ JUEGO JUNTAS
7	3019381X91		**2**	UNION	RACCORD RACCORDO	VERSCHRAUBUNG RACOR
8	3019396X1	7	**1**	O RING	JOINT TORIQUE ANELLO OR	O-RING JUNTA TORICA
9	3793739M1		**1**	TUBE	TUBE TUBO	ROHR TUBO
10	3019700X91		**2**	UNION	RACCORD RACCORDO	VERSCHRAUBUNG RACOR
11	3019394X1	10	**1**	O RING	JOINT TORIQUE ANELLO OR	O-RING JUNTA TORICA
12	3793264M1		**1**	NON RETURN VALVE	CLAPET VALVOLA NO RITOR	RUCKSCHLAGVENTIL VALVULA DE GRANO
13	3903453M91	12	**1**	KIT, JOINT	JEU JOINTS KIT GIUNTO	DICHTUNGSSATZ JUEGO JUNTAS
14	3793740M1		**1**	TUBE	TUBE TUBO	ROHR TUBO
15	3019408X91		**1**	ELBOW	COUDE GOMITO	WINKELSTUECK CODO
16	3019393X1	15	**1**	O RING	JOINT TORIQUE ANELLO OR	O-RING JUNTA TORICA
17	3793734M1		**1**	TUBE	TUBE TUBO	ROHR TUBO
18	**3010466X1**		**3**	GASKET	JOINT GUARNIZIONE	DICHTSCHEIBE EMPAQUETADURA.
19	3619630M1		**1**	TUBE	TUBE TUBO	ROHR TUBO
20	3712664M1		**1**	BUSH	BAGUE BOCCOLA	BUCHSE CASQUILLO
21	3712665M1		**1**	BUSH	BAGUE BOCCOLA	BUCHSE CASQUILLO
22	3009351X1	M6X8	**1**	SCREW	VIS VITE	SCHRAUBE TORNILLO
23	354700X1	∅ 3/4"-10 ◀▶ 19MM	**1**	SCREW	VIS VITE	SCHRAUBE TORNILLO
24	3793738M1		**1**	TUBE	TUBE TUBO	ROHR TUBO
25	3793687M91		**1**	ELBOW NIPPLE	RACCORD COUDE NIPPLO GOMITO	WINKELSTUTZEN CODO DE UNION
26	835024M1	25	**1**	O RING	JOINT TORIQUE ANELLO OR	O-RING JUNTA TORICA

Wet Clutch With Power Shuttle
Embrayage A Bain D'Huile Avec Inverseur Sous Couple
Oelbad Scheibenkupplung Mit Unter Drehmoment
Frizione A Bagno D'Olio Con Sotto Coppia
Embrague De Discos Sumergidos Con Inversor Sub Par

20-55

1-ZD13-013-A

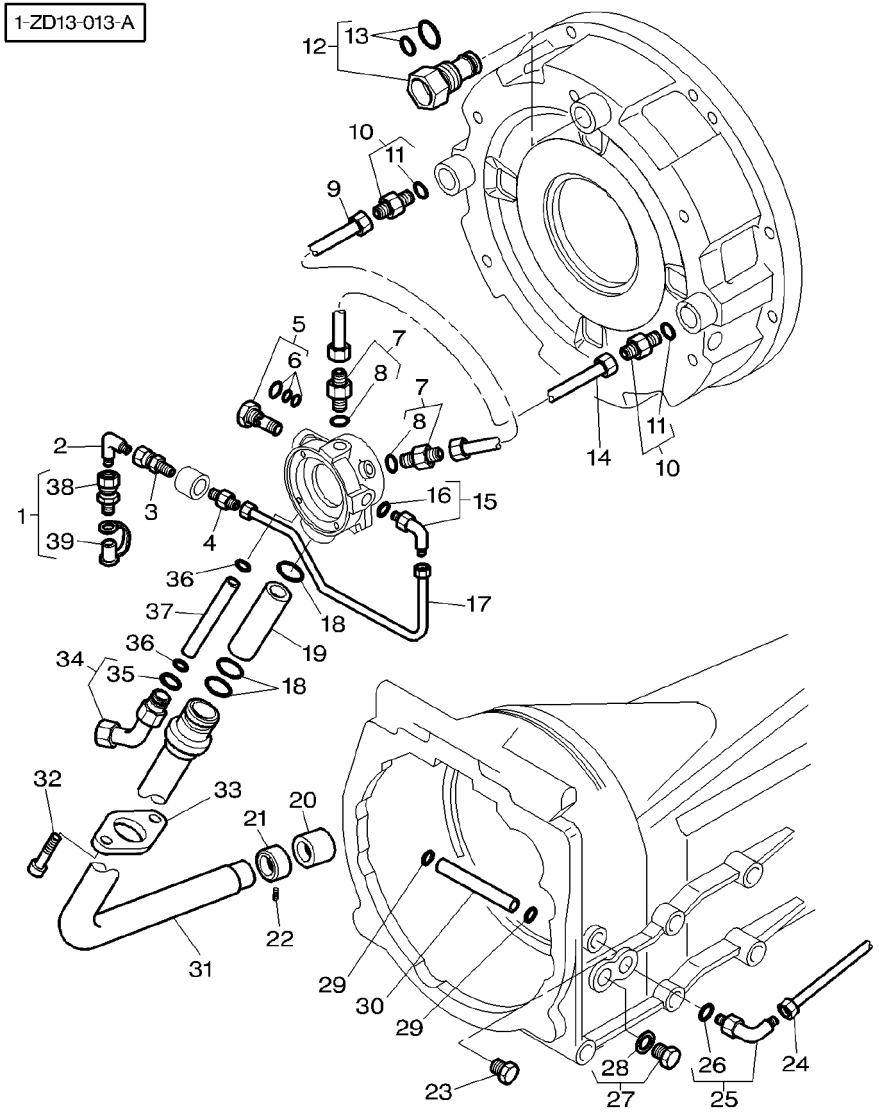

27	358724X91		**1**	PLUG	BOUCHON TAPPO	VERSCHL.STOPFEN TAPON
28	831497M1	27	**1**	O RING	JOINT TORIQUE ANELLO OR	O-RING JUNTA TORICA
29	377494X1		**2**	O RING	JOINT TORIQUE ANELLO OR	O-RING JUNTA TORICA
30	3793644M1	◄► 71MM	**1**	TUBE	TUBE TUBO	ROHR TUBO
31	3793635M91		**1**	TUBE	TUBE TUBO	ROHR TUBO
32	391989X1	M8X20	**2**	SCREW METRIC	VIS METRIQUE VITE METRICA	SCHRAUBE METR TORNILLO METRICO
33	3619657M1		**1**	BRIDLE	BRIDE BRIGLIA	SPANNBAND BRIDA
34	3793686M91		**1**	UNION	RACCORD RACCORDO	VERSCHRAUBUNG RACOR
35	3019398X1	34	**1**	O RING	JOINT TORIQUE ANELLO OR	O-RING JUNTA TORICA
36	70923561		**2**	O RING	JOINT TORIQUE ANELLO OR	O-RING JUNTA TORICA
37	3793646M1	◄► 196,5MM	**1**	TUBE	TUBE TUBO	ROHR TUBO
38	3903586M1	1	**1**	HELMET	CAPUCHON CASCO	SCHUTZHELM CASCO
39	3903585M1	1	**1**	NON RETURN VALVE	CLAPET VALVOLA NO RITOR	RUCKSCHLAGVENTIL VALVULA DE GRANO

Wet Clutch
Embrayage A Bain D'Huile
Oelbad Scheibenkupplung
Frizione A Bagno D'Olio
Embrague De Discos Sumergidos

20-60

With Dual Control
Avec Dual Control
Mit Dual Control
Con Dual Control
Con Dual Control

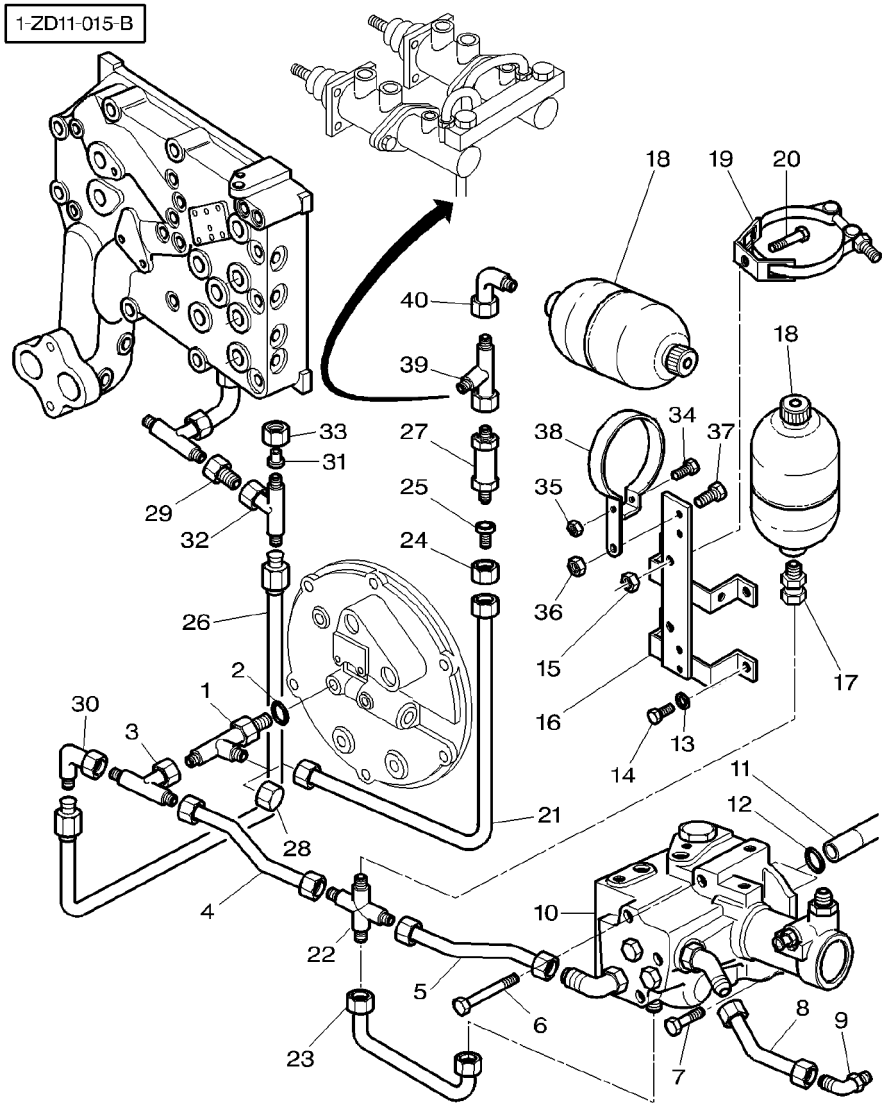

1	3010498X1		1	TEEPIECE	TE RACCORDO A T	T-STUECK PIEZA EN T
2	3019395X1		1	O RING	JOINT TORIQUE ANELLO OR	O-RING JUNTA TORICA
3	372543X1		1	UNION	RACCORD RACCORDO	VERSCHRAUBUNG RACOR
4	3712911M91		1	TUBE	TUBE TUBO	ROHR TUBO
5	3712909M91		1	TUBE	TUBE TUBO	ROHR TUBO
6	339159X1	M8X65	1	BOLT METRIC	BOULON METRIQUE BULLONE METRICO	MASCH.SCHRB MET PERNO METRICO
7	339123X1	M8X20	2	SCREW METRIC	VIS METRIQUE VITE METRICA	SCHRAUBE METR TORNILLO METRICO
8	3712906M91		1	TUBE	TUBE TUBO	ROHR TUBO
9	3385713M91		1	UNION	RACCORD RACCORDO	VERSCHRAUBUNG RACOR
10	3712685M18	H350012 20-75 No 1	1	PRESSURE VALVE	VALVE VALVOLA PRESSION	DRUCKVENTIL VALVULA PRESION
10	3793690M11	H350013 20-75 No 1	1	PRESSURE VALVE	VALVE VALVOLA PRESSION	DRUCKVENTIL VALVULA PRESION
11	3712358M1		2	TUBE	TUBE TUBO	ROHR TUBO
12	377494X1		4	O RING	JOINT TORIQUE ANELLO OR	O-RING JUNTA TORICA
13	339328X1	∅ 12MM	4	WASHER	RONDELLE RONDELLA	UNTERLEGSCHEIBE ARANDELA
14	354702X1	∅ 3/4"-10 ◀▶ 25 MM	4	SCREW	VIS VITE	SCHRAUBE TORNILLO
15	339169X1	M8	1	NUT METRIC	ECROU METRIQUE DADO METRICO	MUTTER METRISCH TUERCA METRICO
16	3617708M6		1	SUPPORT	SUPPORT SUPPORTO	LAGERUNG DISPOS.DE SOSTEN
17	380018X1		1	CONNECTOR	BORNE MORSETTO	DOPPELNIPPEL CONECTOR
18	**3619551M1**		2	ACCUMULATOR	ACCUMULATEUR ACCUMULATORE	AKKUMULATOR ACUMULADOR
19	3619807M1		1	BRIDLE	BRIDE BRIGLIA	SPANNBAND BRIDA
20	339124X1	M8X16	1	SCREW METRIC	VIS METRIQUE VITE METRICA	SCHRAUBE METR TORNILLO METRICO
21	3792926M1	[A]	1	TUBE	TUBE TUBO	ROHR TUBO
22	3791468M91		1	UNION	RACCORD RACCORDO	VERSCHRAUBUNG RACOR
23	**3713633M1**		1	TUBE	TUBE TUBO	ROHR TUBO
24	195960M1		1	NUT	ECROU DADO	MUTTER TUERCA
25	356627X1		1	ADAPTOR	ADAPTATEUR ADATTATORE	REDUZIERNIPPEL ADAPTADOR

Wet Clutch
Embrayage A Bain D'Huile
Oelbad Scheibenkupplung
Frizione A Bagno D'Olio
Embrague De Discos Sumergidos

20-60

With Dual Control
Avec Dual Control
Mit Dual Control
Con Dual Control
Con Dual Control

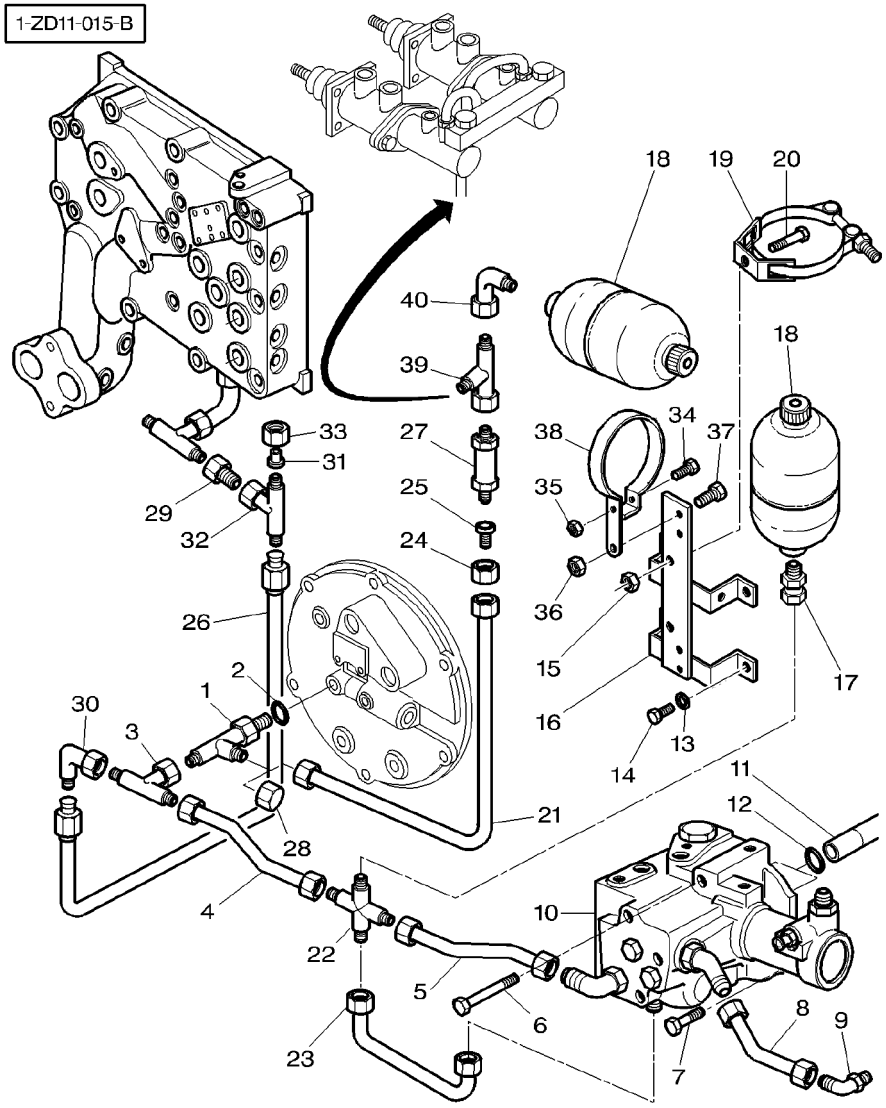

26	3792364M1		**1**	TUBE	TUBE TUBO	ROHR TUBO
27	3790409M1		**1**	NON RETURN VALVE	CLAPET VALVOLA NO RITOR	RUCKSCHLAGVENTIL VALVULA DE GRANO
28	356579X1		**1**	CAP	CHAPEAU CAPPELLO	KAPPE TAPA
29	377651X1		**1**	REDUCER	REDUCTEUR RIDUTTORE	REDUZIERSTUECK REDUCTOR
30	365233X1		**1**	ELBOW	COUDE GOMITO	WINKELSTUECK CODO
31	356627X1		**1**	ADAPTOR	ADAPTATEUR ADATTATORE	REDUZIERNIPPEL ADAPTADOR
32	372543X1		**1**	UNION	RACCORD RACCORDO	VERSCHRAUBUNG RACOR
33	195960M1		**1**	NUT	ECROU DADO	MUTTER TUERCA
34	339262X1	M6X30	**1**	BOLT METRIC	BOULON METRIQUE BULLONE METRICO	MASCH.SCHRB MET PERNO METRICO
35	1441462X1		**1**	LOCKNUT	ECROU BLOCAGE AUTOBLOCCANTE	FLACHMUTTER CONTRATUERCA
36	1441461X1		**1**	NUT METRIC	ECROU METRIQUE DADO METRICO	MUTTER METRISCH TUERCA METRICO
37	339123X1	M8X20	**1**	SCREW METRIC	VIS METRIQUE VITE METRICA	SCHRAUBE METR TORNILLO METRICO
38	3790442M1		**1**	COLLAR	COLLERETTE COLLARE	FLANSCHRING COLLAR
39	364735X1		**1**	UNION	RACCORD RACCORDO	VERSCHRAUBUNG RACOR
40	380009X1		**1**	UNION	RACCORD RACCORDO	VERSCHRAUBUNG RACOR

[A] WITH ASSISTED BRAKE
AVEC FREIN ASSISTE
MIT HILSKRAFTBREMSE
CON FRENO ASSISTITE
CON FRENO ASISTIDE

Wet Clutch With Power Shuttle
Embrayage A Bain D'Huile Avec Inverseur Sous Couple
Oelbad Scheibenkupplung Mit Unter Drehmoment
Frizione A Bagno D'Olio Con Sotto Coppia
Embrague De Discos Sumergidos Con Inversor Sub Par

20-65

Without Dual Control
Sans Dual Control
Ohne Dual Control
Senza Dual Control
Sin Dual Control

1-ZD13-011-A

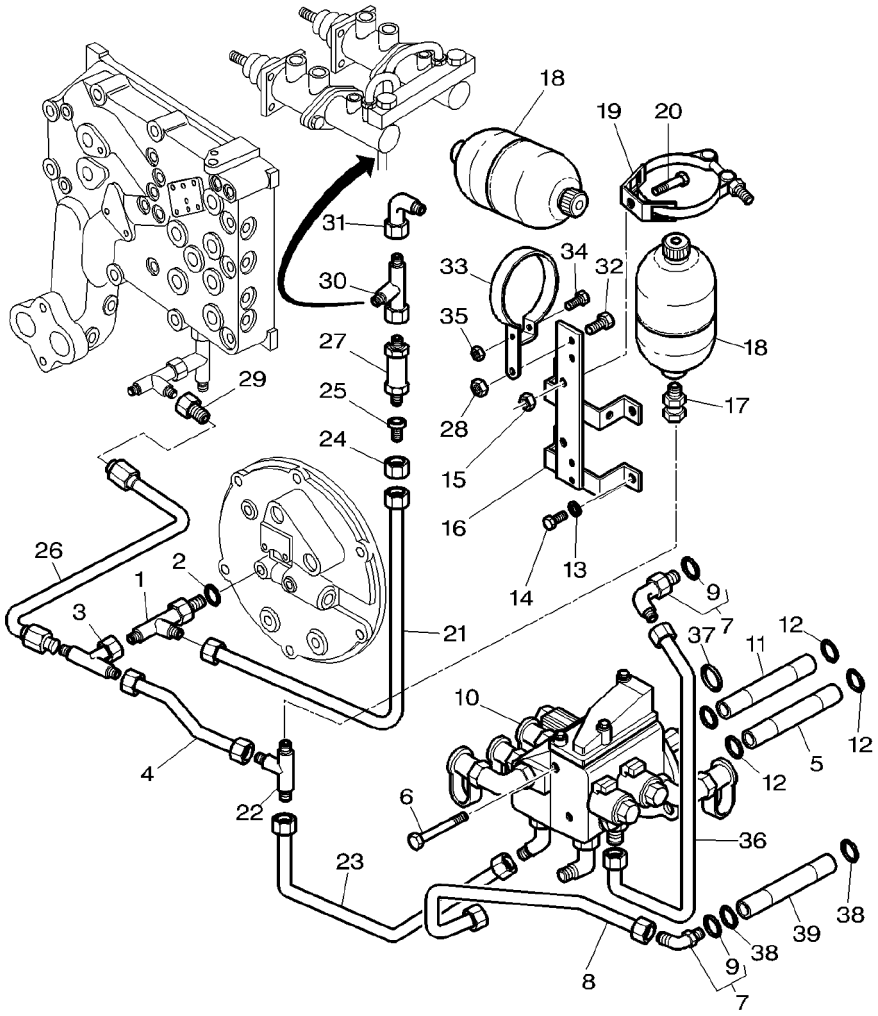

1	3010498X1		**1**	TEEPIECE	TE RACCORDO A T	T-STUECK PIEZA EN T
2	3019395X1		**1**	O RING	JOINT TORIQUE ANELLO OR	O-RING JUNTA TORICA
3	372543X1		**1**	UNION	RACCORD RACCORDO	VERSCHRAUBUNG RACOR
4	3712911M91		**1**	TUBE	TUBE TUBO	ROHR TUBO
5	3793641M1	◀▶ 211MM	**1**	TUBE	TUBE TUBO	ROHR TUBO
6	391989X1	M8X20	**1**	SCREW METRIC	VIS METRIQUE VITE METRICA	SCHRAUBE METR TORNILLO METRICO
6	3009289X1	M8X70	**1**	SCREW METRIC	VIS METRIQUE VITE METRICA	SCHRAUBE METR TORNILLO METRICO
6	394842X1	M8X130	**1**	SCREW METRIC	VIS METRIQUE VITE METRICA	SCHRAUBE METR TORNILLO METRICO
7	3793686M91		**2**	UNION	RACCORD RACCORDO	VERSCHRAUBUNG RACOR
8	3793736M1		**1**	TUBE	TUBE TUBO	ROHR TUBO
9	3019398X1	7	**1**	O RING	JOINT TORIQUE ANELLO OR	O-RING JUNTA TORICA
10	3793647M11	👁 20-80 No 1	**1**	PRESSURE VALVE	VALVE VALVOLA PRESSION	DRUCKVENTIL VALVULA PRESION
11	3793643M1	◀▶ 120MM	**1**	TUBE	TUBE TUBO	ROHR TUBO
12	377494X1		**4**	O RING	JOINT TORIQUE ANELLO OR	O-RING JUNTA TORICA
13	339328X1	∅ 12MM	**4**	WASHER	RONDELLE RONDELLA	UNTERLEGSCHEIBE ARANDELA
14	354702X1	∅ 3/4"-10 ◀▶ 25 MM	**4**	SCREW	VIS VITE	SCHRAUBE TORNILLO
15	339169X1	M8	**1**	NUT METRIC	ECROU METRIQUE DADO METRICO	MUTTER METRISCH TUERCA METRICO
16	3617708M6		**1**	SUPPORT	SUPPORT SUPPORTO	LAGERUNG DISPOS.DE SOSTEN
17	380018X1		**1**	CONNECTOR	BORNE MORSETTO	DOPPELNIPPEL CONECTOR
18	**3619551M1**		**2**	ACCUMULATOR	ACCUMULATEUR ACCUMULATORE	AKKUMULATOR ACUMULADOR
19	3619807M1		**1**	BRIDLE	BRIDE BRIGLIA	SPANNBAND BRIDA
20	339124X1	M8X16	**1**	SCREW METRIC	VIS METRIQUE VITE METRICA	SCHRAUBE METR TORNILLO METRICO
21	3792926M1		**1**	TUBE	TUBE TUBO	ROHR TUBO
22	356560X1		**1**	TEEPIECE	TE RACCORDO A T	T-STUECK PIEZA EN T
23	3793735M1		**1**	TUBE	TUBE TUBO	ROHR TUBO
24	195960M1		**1**	NUT	ECROU DADO	MUTTER TUERCA

Wet Clutch With Power Shuttle
Embrayage A Bain D'Huile Avec Inverseur Sous Couple
Oelbad Scheibenkupplung Mit Unter Drehmoment
Frizione A Bagno D'Olio Con Sotto Coppia
Embrague De Discos Sumergidos Con Inversor Sub Par

20-65

Without Dual Control
Sans Dual Control
Ohne Dual Control
Senza Dual Control
Sin Dual Control

1-ZD13-011-A

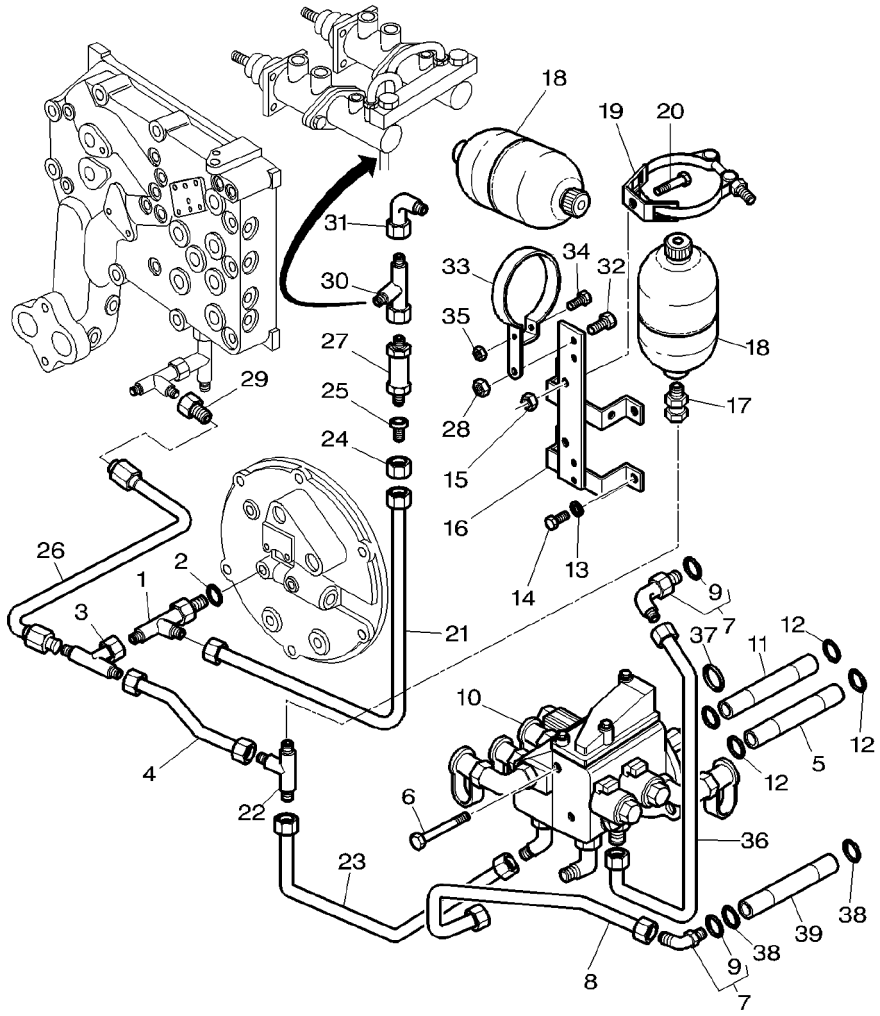

25	356627X1		1	ADAPTOR	ADAPTATEUR ADATTATORE	REDUZIERNIPPEL ADAPTADOR
26	3716171M92		1	TUBE	TUBE TUBO	ROHR TUBO
27	3790409M1		1	NON RETURN VALVE	CLAPET VALVOLA NO RITOR	RUCKSCHLAGVENTIL VALVULA DE GRANO
28	1441461X1		1	NUT METRIC	ECROU METRIQUE DADO METRICO	MUTTER METRISCH TUERCA METRICO
29	377651X1		1	REDUCER	REDUCTEUR RIDUTTORE	REDUZIERSTUECK REDUCTOR
30	364735X1		1	UNION	RACCORD RACCORDO	VERSCHRAUBUNG RACOR
31	380009X1		1	UNION	RACCORD RACCORDO	VERSCHRAUBUNG RACOR
32	339123X1	M8X20	1	SCREW METRIC	VIS METRIQUE VITE METRICA	SCHRAUBE METR TORNILLO METRICO
33	3790442M1		1	COLLAR	COLLERETTE COLLARE	FLANSCHRING COLLAR
34	339262X1	M6X30	1	BOLT METRIC	BOULON METRIQUE BULLONE METRICO	MASCH.SCHRB MET PERNO METRICO
35	1441462X1		1	LOCKNUT	ECROU BLOCAGE AUTOBLOCCANTE	FLACHMUTTER CONTRATUERCA
36	3793737M1		1	TUBE	TUBE TUBO	ROHR TUBO
37	1001489M1		1	O RING	JOINT TORIQUE ANELLO OR	O-RING JUNTA TORICA
38	70923561		2	O RING	JOINT TORIQUE ANELLO OR	O-RING JUNTA TORICA
39	3793645M1	◄► 77,50MM	1	TUBE	TUBE TUBO	ROHR TUBO

Wet Clutch With Power Shuttle
Embrayage A Bain D'Huile Avec Inverseur Sous Couple
Oelbad Scheibenkupplung Mit Unter Drehmoment
Frizione A Bagno D'Olio Con Sotto Coppia
Embrague De Discos Sumergidos Con Inversor Sub Par

20-70

1-ZD13-012-A

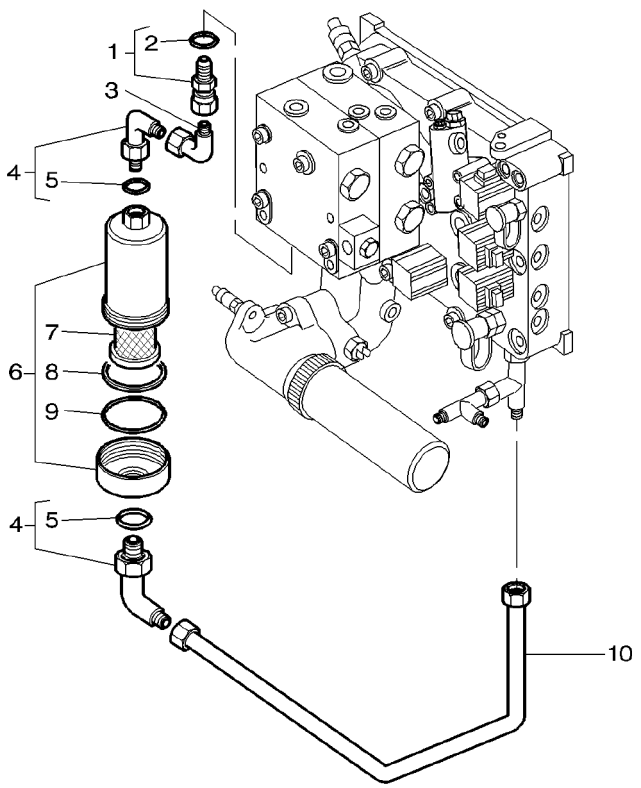

1	3010948X91		**1**	ADAPTOR	ADAPTATEUR ADATTATORE	REDUZIERNIPPEL ADAPTADOR
2	3019398X1	1	**1**	O RING	JOINT TORIQUE ANELLO OR	O−RING JUNTA TORICA
3	**367386X1**		**1**	ELBOW	COUDE GOMITO	WINKELSTUECK CODO
4	3019418X91		**2**	UNION	RACCORD RACCORDO	VERSCHRAUBUNG RACOR
5	3019398X1	4	**1**	O RING	JOINT TORIQUE ANELLO OR	O−RING JUNTA TORICA
6	***3792285M91***		**1**	FILTER	FILTRE FILTRO	FILTER FILTRO
7	***3792287M1***	6	**1**	FILTER INSERT	ELEMENT FILTRANT ELEMENTO FILTRAN	FILTEREINSATZ SUPLEMENT FILTRO
8	3903195M1	6	**1**	TONGUE	LANGUETTE LINGUETTA	ZUNGE LENGUETA
9	3903194M1	6	**1**	O RING	JOINT TORIQUE ANELLO OR	O−RING JUNTA TORICA
10	3793732M1		**1**	TUBE	TUBE TUBO	ROHR TUBO

Wet Clutch
Embrayage A Bain D'Huile
Oelbad Scheibenkupplung
Frizione A Bagno D'Olio
Embrague De Discos Sumergidos

20-75

Valve
Valve
Ventil
Valvola
Valvula

1-ZD11-016-C

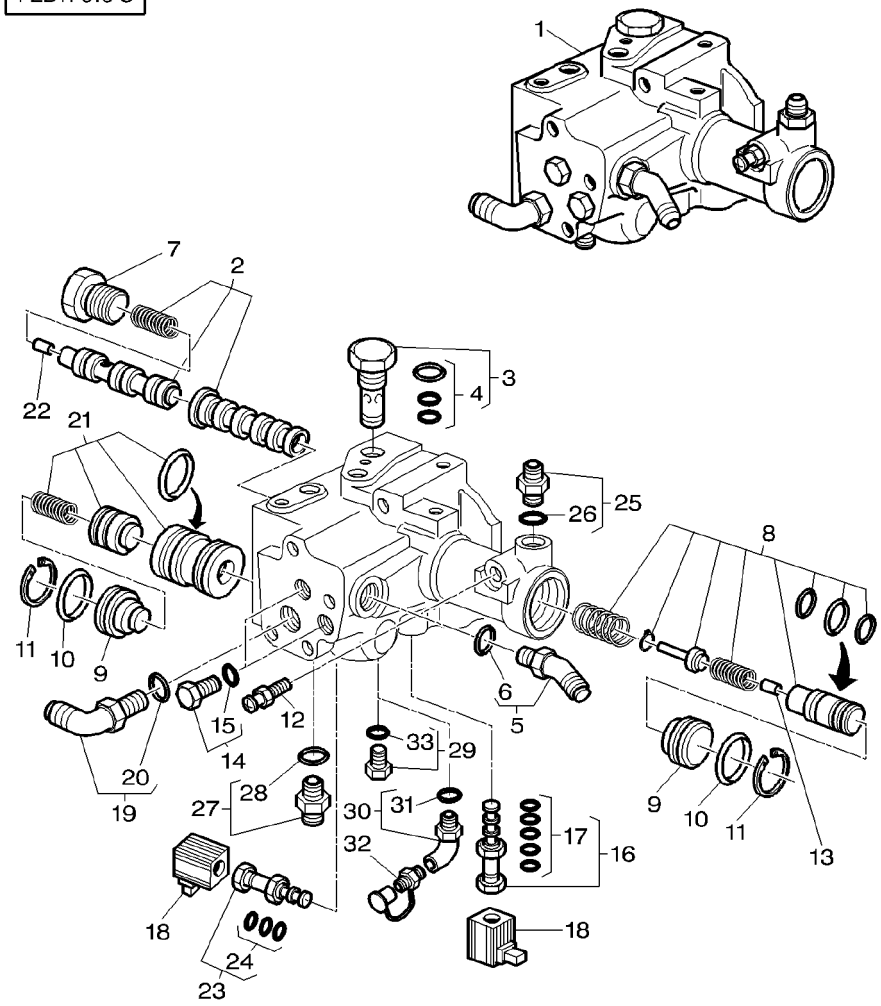

1	3712685M18	➡| H350012	**1**	PRESSURE VALVE	VALVE VALVOLA PRESSION	DRUCKVENTIL VALVULA PRESION
1	3793690M11	➡	H350013	**1**	PRESSURE VALVE	VALVE VALVOLA PRESSION	DRUCKVENTIL VALVULA PRESION
2	3713395M11	1		**1**	PARTS PACK	JEU PIECES PACCO RICAMBI	SATZ TEILE PAQUETE PIEZAS
3	3619243M2	1		**1**	NON RETURN VALVE	CLAPET VALVOLA NO RITOR	RUCKSCHLAGVENTIL VALVULA DE GRANO
4	3900995M91	3		**1**	KIT, JOINT	JEU JOINTS KIT GIUNTO	DICHTUNGSSATZ JUEGO JUNTAS
5	3019586X91	1		**1**	UNION	RACCORD RACCORDO	VERSCHRAUBUNG RACOR
6	3019396X1	5		**1**	O RING	JOINT TORIQUE ANELLO OR	O-RING JUNTA TORICA
7	3712307M1	1		**1**	PLUG	BOUCHON TAPPO	VERSCHL.STOPFEN TAPON
8	3713396M12	1		**1**	PARTS PACK	JEU PIECES PACCO RICAMBI	SATZ TEILE PAQUETE PIEZAS
9	3712323M2	1		**2**	PLUG	BOUCHON TAPPO	VERSCHL.STOPFEN TAPON
10	373215X1	1		**2**	GASKET	JOINT GUARNIZIONE	DICHTSCHEIBE EMPAQUETADURA.
11	3010481X1	1		**2**	CLIP	CLIP FERMAGLIO	SCHELLE CRAPA RETEN
12	3052960M1	1		**1**	BANJO BOLT	VIS BANJO BULLONE BANJO	HOHLSCHRAUBE TORNILLO DIFER
13	3713473M1	1		**1**	STOP	BUTEE STOP	ANSCHLAG PARO
14	3019639X91	1		**2**	PLUG	BOUCHON TAPPO	VERSCHL.STOPFEN TAPON
15	3019395X1	14		**1**	O RING	JOINT TORIQUE ANELLO OR	O-RING JUNTA TORICA
16	***3619824M1***	1		**1**	SPOOL	TIROIR ROCCHETTO	STEUERSCHIEBER CARRETE
17	3900993M91	16		**1**	KIT, JOINT	JEU JOINTS KIT GIUNTO	DICHTUNGSSATZ JUEGO JUNTAS
18	***3619763M1***	1		**2**	SOLENOID	SOLENOIDE SOLENOIDE	MAGNETSPULE SOLENOIDE
19	**3019414X91**	1		**1**	UNION	RACCORD RACCORDO	VERSCHRAUBUNG RACOR
20	3019396X1	19		**1**	O RING	JOINT TORIQUE ANELLO OR	O-RING JUNTA TORICA
21	3713394M11	1		**1**	PARTS PACK	JEU PIECES PACCO RICAMBI	SATZ TEILE PAQUETE PIEZAS
22	3713557M1	1		**1**	STOP	BUTEE STOP	ANSCHLAG PARO
23	***3619762M1***	1		**1**	SPOOL	TIROIR ROCCHETTO	STEUERSCHIEBER CARRETE
24	3900994M91	23		**1**	KIT, JOINT	JEU JOINTS KIT GIUNTO	DICHTUNGSSATZ JUEGO JUNTAS
25	3713388M91	1		**1**	UNION	RACCORD RACCORDO	VERSCHRAUBUNG RACOR

Wet Clutch
Embrayage A Bain D'Huile
Oelbad Scheibenkupplung
Frizione A Bagno D'Olio
Embrague De Discos Sumergidos

20-75

Valve
Valve
Ventil
Valvola
Valvula

1-ZD11-016-C

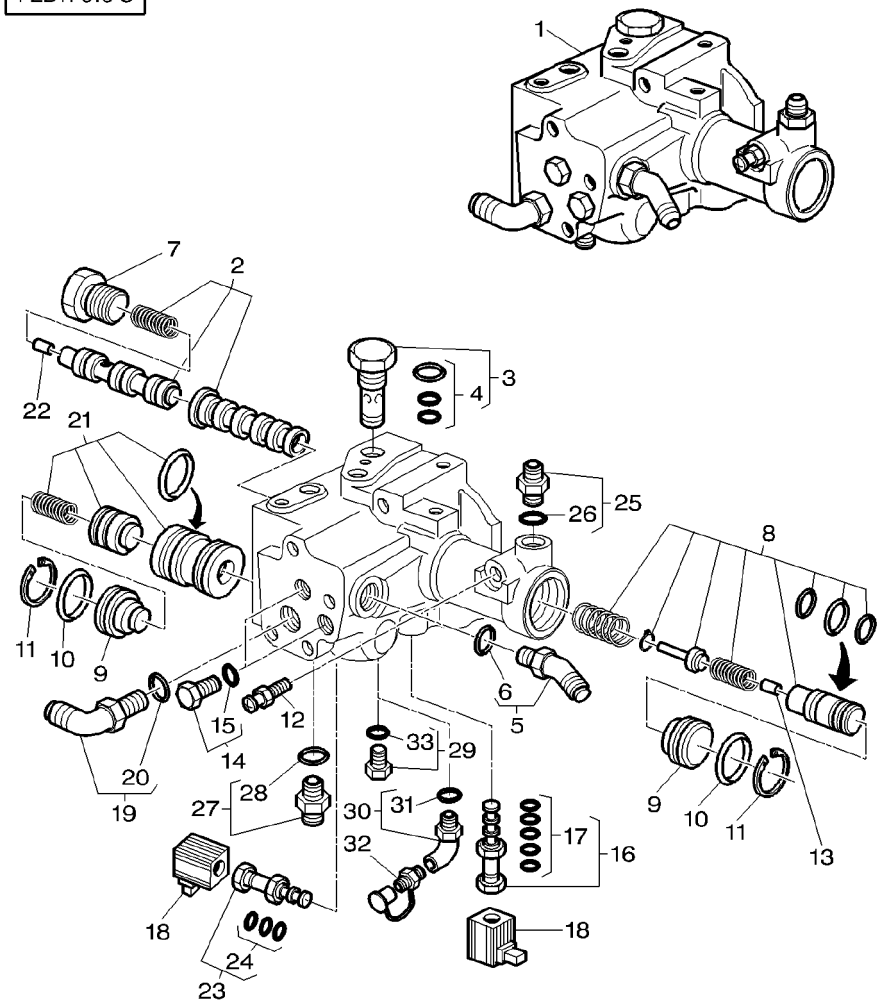

26	3019396X1	25		**1**	O RING	JOINT TORIQUE ANELLO OR O-RING JUNTA TORICA
27	3019700X91	1		**1**	UNION	RACCORD RACCORDO VERSCHRAUBUNG RACOR
28	3019394X1	27		**1**	O RING	JOINT TORIQUE ANELLO OR O-RING JUNTA TORICA
29	3019639X91	1 ➡	H350012	**1**	PLUG	BOUCHON TAPPO VERSCHL.STOPFEN TAPON
30	3793673M91	1 ➡	H350013	**1**	ELBOW	COUDE GOMITO WINKELSTUECK CODO
31	3019395X1	30		**1**	O RING	JOINT TORIQUE ANELLO OR O-RING JUNTA TORICA
32	***3384387M1***	1 ➡	H350013	**1**	PRESSURE INTAKE	PRISE PRESSION PRESA PRESSIONE ANSAUGDRUCK ENTRADA PRESION
33	3019395X1	29		**1**	O RING	JOINT TORIQUE ANELLO OR O-RING JUNTA TORICA

Wet Clutch With Power Shuttle
Embrayage A Bain D'Huile Avec Inverseur Sous Couple
Oelbad Scheibenkupplung Mit Unter Drehmoment
Frizione A Bagno D'Olio Con Sotto Coppia
Embrague De Discos Sumergidos Con Inversor Sub Par

20-80

Valve With Dynashift
Valve Avec Dynashift
Ventil Mit Dynashift
Valvola Con Dynashift
Valvula Con Dynashift

1-ZD13-010-A

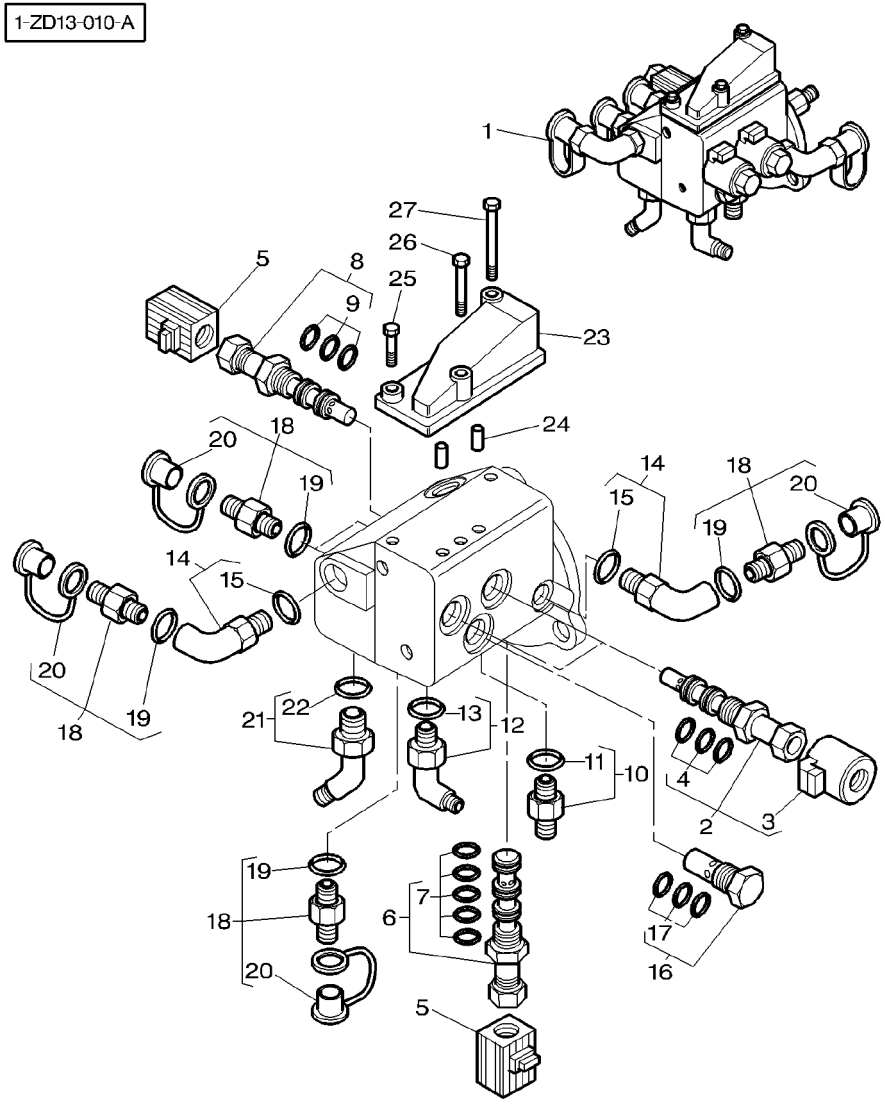

1	3793647M11			**1**	PRESSURE VALVE	VALVE VALVOLA PRESSION	DRUCKVENTIL VALVULA PRESION
2	***3792468M2***	1		**2**	ELECTROVALVE	ELECTROVANNE ELETTROVALVOLA	ELECTRON.VENTIL ELECTROVALVULA
3	3791412M1	2		**1**	SOLENOID	SOLENOIDE SOLENOIDE	MAGNETSPULE SOLENOIDE
4	3902774M92	2		**1**	KIT, JOINT	JEU JOINTS KIT GIUNTO	DICHTUNGSSATZ JUEGO JUNTAS
5	***3619763M1***	1		**2**	SOLENOID	SOLENOIDE SOLENOIDE	MAGNETSPULE SOLENOIDE
6	***3619824M1***	1		**1**	SPOOL	TIROIR ROCCHETTO	STEUERSCHIEBER CARRETE
7	3900993M91	6		**1**	KIT, JOINT	JEU JOINTS KIT GIUNTO	DICHTUNGSSATZ JUEGO JUNTAS
8	***3619762M1***	1		**1**	SPOOL	TIROIR ROCCHETTO	STEUERSCHIEBER CARRETE
9	3900994M91	8		**1**	KIT, JOINT	JEU JOINTS KIT GIUNTO	DICHTUNGSSATZ JUEGO JUNTAS
10	3019385X91	1		**1**	UNION	RACCORD RACCORDO	VERSCHRAUBUNG RACOR
11	3019397X1	10		**1**	O RING	JOINT TORIQUE ANELLO OR	O-RING JUNTA TORICA
12	3019416X91	1		**1**	ELBOW	COUDE GOMITO	WINKELSTUECK CODO
13	3019397X1	12		**1**	O RING	JOINT TORIQUE ANELLO OR	O-RING JUNTA TORICA
14	3793673M91	1		**2**	ELBOW	COUDE GOMITO	WINKELSTUECK CODO
15	3019395X1	14		**1**	O RING	JOINT TORIQUE ANELLO OR	O-RING JUNTA TORICA
16	3619243M2	1	1,5 BAR ∅ 7/8"-14	**1**	NON RETURN VALVE	CLAPET VALVOLA NO RITOR	RUCKSCHLAGVENTIL VALVULA DE GRANO
17	3900995M91	16		**1**	KIT, JOINT	JEU JOINTS KIT GIUNTO	DICHTUNGSSATZ JUEGO JUNTAS
18	***3384387M1***	1	∅ M14	**5**	PRESSURE INTAKE	PRISE PRESSION PRESA PRESSIONE	ANSAUGDRUCK ENTRADA PRESION
19	831452M1	18		**1**	O RING	JOINT TORIQUE ANELLO OR	O-RING JUNTA TORICA
20	3467187M1	18		**1**	CAP	CHAPEAU CAPPELLO	KAPPE TAPA
21	3019586X91	1	∅ 3/4"-16 / M16	**1**	UNION	RACCORD RACCORDO	VERSCHRAUBUNG RACOR
22	3019396X1	21		**1**	O RING	JOINT TORIQUE ANELLO OR	O-RING JUNTA TORICA
23	3793639M1	1		**1**	COVER	COUVERCLE COPERCHIO	DECKEL CUBIERTA
24	3716287M2	1		**2**	PIN	GOUPILLE PERNO	BOLZEN PASADOR
25	339262X1	1	M6X30	**1**	BOLT METRIC	BOULON METRIQUE BULLONE METRICO	MASCH.SCHRB MET PERNO METRICO
26	391244X1	1	M6X45	**1**	BOLT METRIC	BOULON METRIQUE BULLONE METRICO	MASCH.SCHRB MET PERNO METRICO

Wet Clutch With Power Shuttle Embrayage A Bain D'Huile Avec Inverseur Sous Couple Oelbad Scheibenkupplung Mit Unter Drehmoment Frizione A Bagno D'Olio Con Sotto Coppia Embrague De Discos Sumergidos Con Inversor Sub Par	20-80	Valve With Dynashift Valve Avec Dynashift Ventil Mit Dynashift Valvola Con Dynashift Valvula Con Dynashift

1-ZD13-010-A

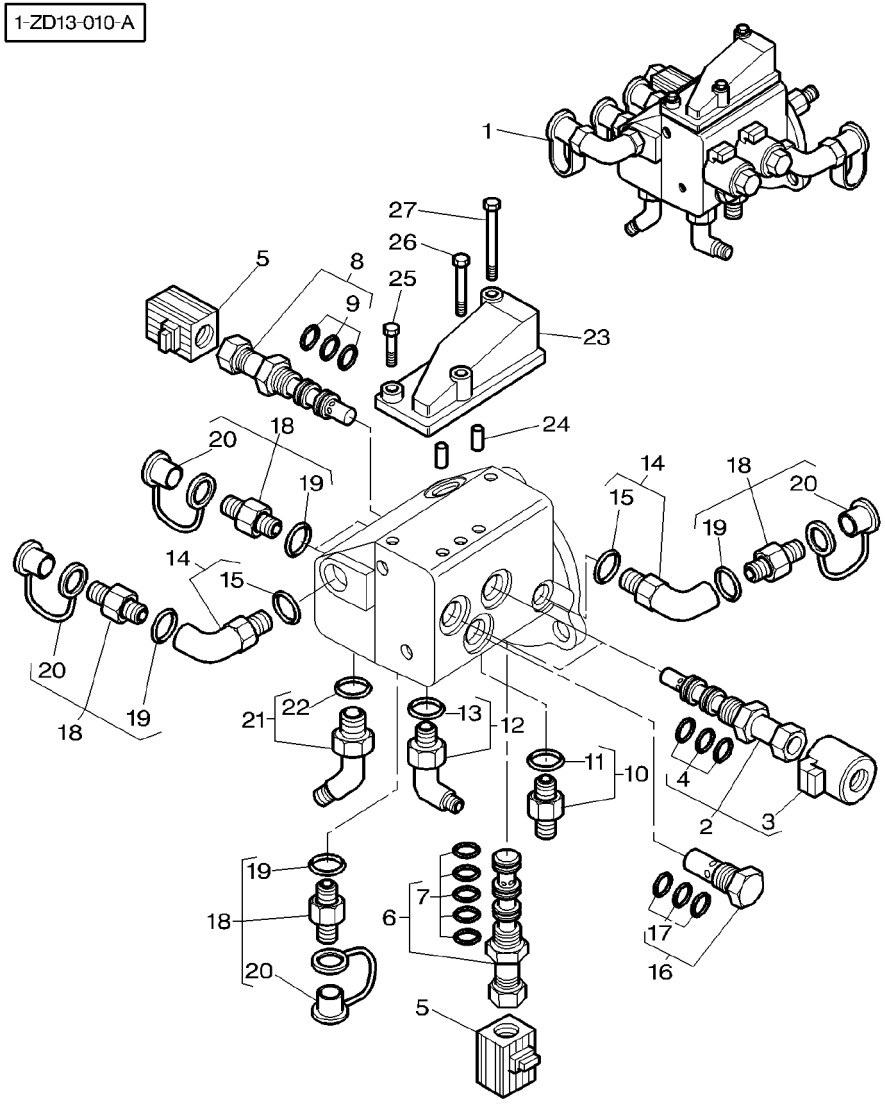

27	339244X1	1	M6X55	**1**	BOLT METRIC	BOULON METRIQUE BULLONE METRICO PERNO METRICO MASCH.SCHRB MET

Clutch Pedal And Linkage
Commande D'Embrayage
Kupplungspedal Und Gestae
Pedale Frizione E Leverismi
Pedal Del Embrague Y Mandos

20-85

With Dynashift
Avec Dynashift
Mit Dynashift
Con Dynashift
Con Dynashift

1-ZD06-006-B

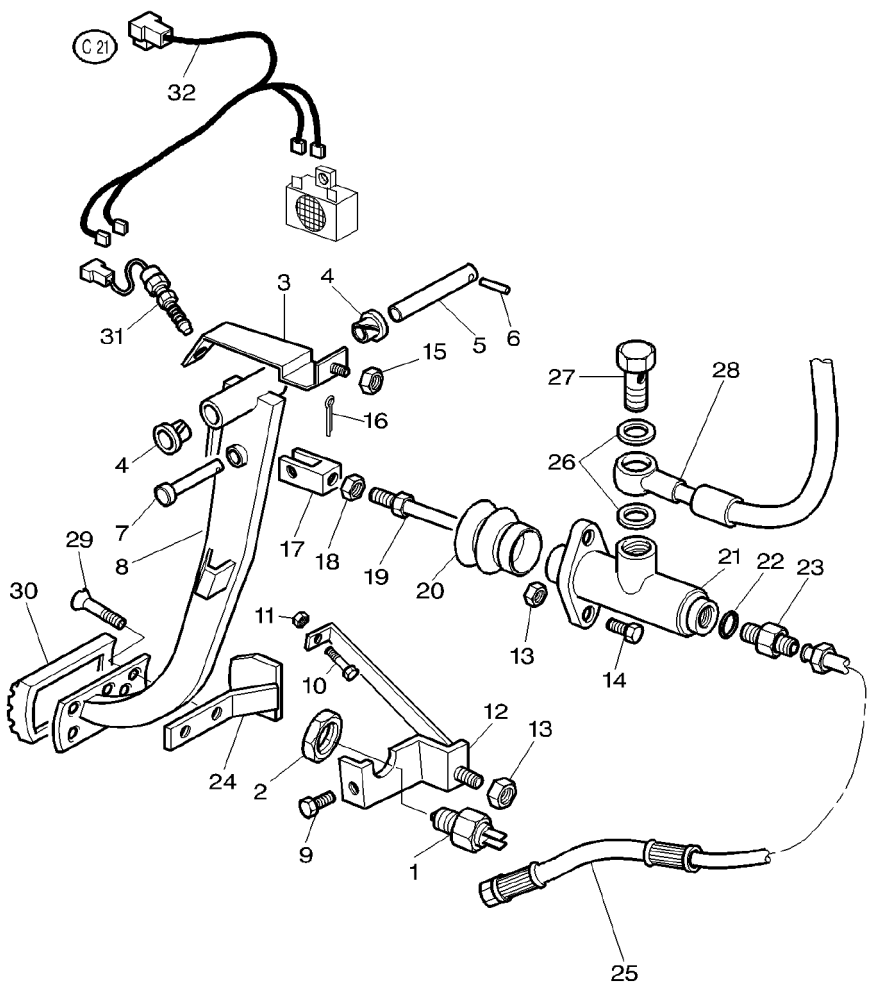

1	***3780580M1***		**1**	SWITCH,INDIRECT	CONTACTEUR INTERRUTTORE IND	KONTAKTSCHALTER CONTACTOR
2	339070X1	M14	**1**	NUT	ECROU DADO	MUTTER TUERCA
3	3712543M93	[A]	**1**	SUPPORT	SUPPORT SUPPORTO	LAGERUNG DISPOS.DE SOSTEN
4	3385604M1		**2**	BEARING	COUSSINET CUSCINETTO	LAGER COJINETE
5	3384658M1	∅ 15 MM	**1**	CLEVIS PIN	AXE PERNO D'ATTACCO	SPLINTBOLZEN BULON CILINDRICO
6	391290X1	∅ 5X30	**1**	PIN	GOUPILLE PERNO	BOLZEN PASADOR
7	3019213X1		**1**	CLEVIS PIN	AXE PERNO D'ATTACCO	SPLINTBOLZEN BULON CILINDRICO
8	3781384M1	[B]	**1**	PEDAL	PEDALE PEDALE	PEDAL PEDAL
9	339228X1	M8X12	**1**	SCREW METRIC	VIS METRIQUE VITE METRICA	SCHRAUBE METR TORNILLO METRICO
10	339009X1	M8X35	**1**	BOLT METRIC	BOULON METRIQUE BULLONE METRICO	MASCH.SCHRB MET PERNO METRICO
11	339169X1	M8	**1**	NUT METRIC	ECROU METRIQUE DADO METRICO	MUTTER METRISCH TUERCA METRICO
12	3777739M91		**1**	STOP	BUTEE STOP	ANSCHLAG PARO
13	394367X1	M8	**1**	LOCKNUT	ECROU BLOCAGE AUTOBLOCCANTE	FLACHMUTTER CONTRATUERCA
14	339123X1	M8X20	**2**	SCREW METRIC	VIS METRIQUE VITE METRICA	SCHRAUBE METR TORNILLO METRICO
15	339030X1	M6	**1**	NUT METRIC	ECROU METRIQUE DADO METRICO	MUTTER METRISCH TUERCA METRICO
16	1442994X1	∅ 3X25	**1**	PIN	GOUPILLE PERNO	BOLZEN PASADOR
17	3385612M3		**1**	CLEVIS	CHAPE GANCIO D'ATTACCO	GABELSTUECK GANCHO SEGURI.
18	392310X1	M10	**1**	NUT METRIC	ECROU METRIQUE DADO METRICO	MUTTER METRISCH TUERCA METRICO
19	3713409M1		**1**	POPPET	POUSSOIR SUPPORTO VERTIC.	VENTILKEGEL CONTRAPUNTA
20	1627465M1		**1**	HELMET	CAPUCHON CASCO	SCHUTZHELM CASCO
21	**1613986M4**		**1**	MAIN CYLINDER	MAITRE CYLINDRE CILINDRO PRINCIP	HAUPTZYLINDER CILINDRO PRINCIP
22	831496M1		**1**	O RING	JOINT TORIQUE ANELLO OR	O-RING JUNTA TORICA
23	330924X1		**1**	UNION	RACCORD RACCORDO	VERSCHRAUBUNG RACOR
24	3714488M3		**1**	STOP	BUTEE STOP	ANSCHLAG PARO
25	3779435M1		**1**	TUBE	TUBE TUBO	ROHR TUBO
26	377378X1		**2**	WASHER	RONDELLE RONDELLA	UNTERLEGSCHEIBE ARANDELA

Clutch Pedal And Linkage
Commande D'Embrayage
Kupplungspedal Und Gestae
Pedale Frizione E Leverismi
Pedal Del Embrague Y Mandos

20-85

With Dynashift
Avec Dynashift
Mit Dynashift
Con Dynashift
Con Dynashift

1-ZD06-006-B

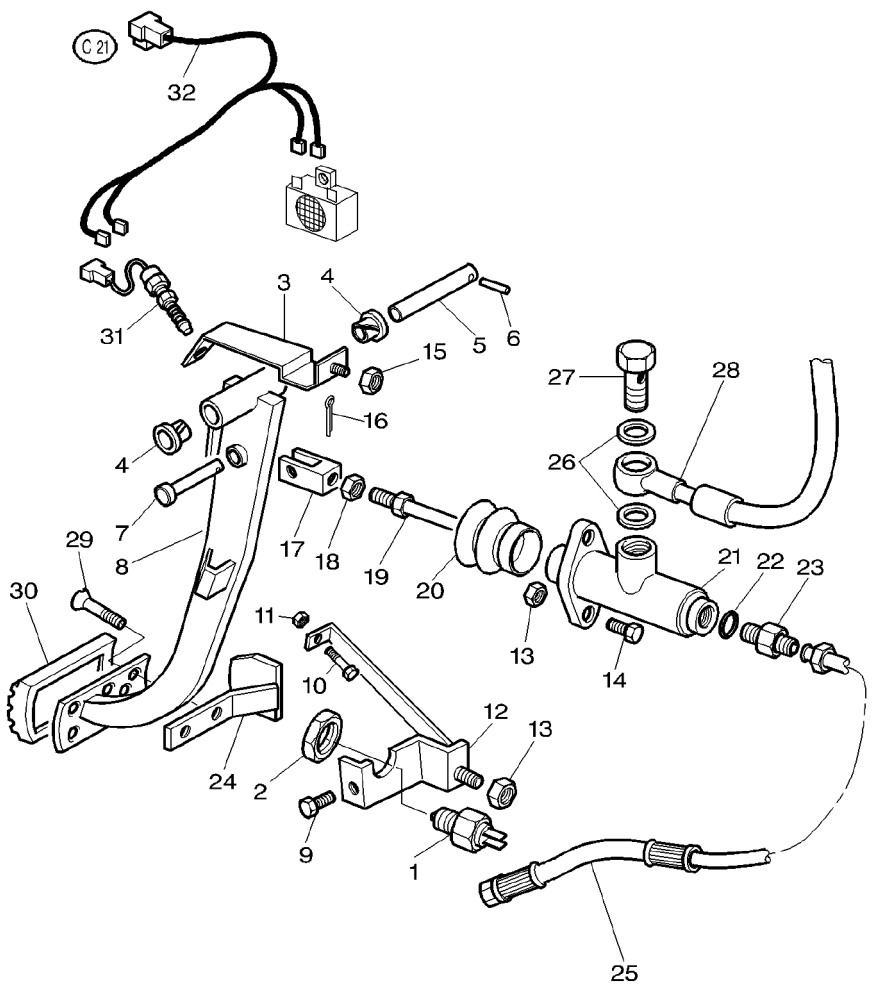

27	3581690M1		
28	3781657M1	➡| H321042 ◀▶ 380MM	
28	3783467M1	|➡ H321043 ◀▶ 305MM	
29	392404X1		
30	1626321M2		
31	***3780395M2***	[A]	
32	3618557M1	[A]	

[A] TRACTOR WITH PLATFORM
TRACTEUR AVEC PLATEFORME
SCHLEPPER MIT PLATTFORM
TRATTORE CON PIATTAFORMA
TRACTOR CON PLATAFORMA

[B] TRACTOR WITH CAB
TRACTEURS AVEC CABINE
SCHLEPPER MIT KABINE
TRATTORE CON CABINA
TRACTOR CON CABINA

1	BANJO BOLT	VIS BANJO BULLONE BANJO	HOHLSCHRAUBE TORNILLO DIFER
1	HYDR HOSE	FLEXIBLE TUBOFLEX IDRAUL	HYDR SCHLAUCH TUBO HIDRAULICO
1	HYDR HOSE	FLEXIBLE TUBOFLEX IDRAUL	HYDR SCHLAUCH TUBO HIDRAULICO
2	SCREW	VIS VITE	SCHRAUBE TORNILLO
1	SKATE	PATIN PATTINO	SCHLITTEN-KUFE PATIN
1	SWITCH,INDIRECT	CONTACTEUR INTERRUTTORE IND	KONTAKTSCHALTER CONTACTOR
1	HARNESS	FAISCEAU FASCIOCAVI	KABELBAUM MAZO CABLES

Clutch Pedal And Linkage
Commande D'Embrayage
Kupplungspedal Und Gestae
Pedale Frizione E Leverismi
Pedal Del Embrague Y Mandos

20-90

With Power Shuttle
Avec Inverseur Sous Couple
Mit Unter Drehmoment
Con Sotto Coppia
Con Inversor Sub Par

1-ZD06-013-A

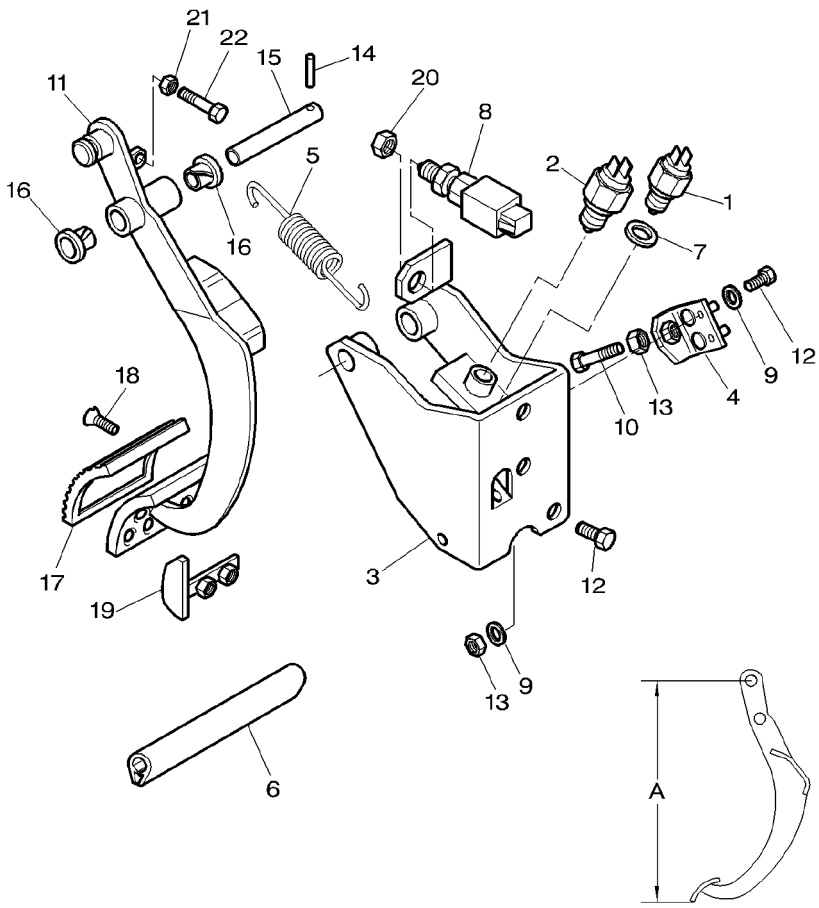

1	***3780580M1***		**1**	SWITCH,INDIRECT	CONTACTEUR INTERRUTTORE IND	KONTAKTSCHALTER CONTACTOR
2	***3783832M1***		**1**	SWITCH,INDIRECT	CONTACTEUR INTERRUTTORE IND	KONTAKTSCHALTER CONTACTOR
3	3783836M1		**1**	SUPPORT	SUPPORT SUPPORTO	LAGERUNG DISPOS.DE SOSTEN
4	3780942M3		**1**	STOP	BUTEE STOP	ANSCHLAG PARO
5	3780978M2		**1**	SPRING	RESSORT MOLLA	FEDER MUELLE
6	1684844M1	◄► 80MM	**1**	SEAL	JOINT ETANCHEITE PARAOLIO	DICHTRING RETEN
7	390973X1	∅ 15-28X2,5	**1**	WASHER METRIC	RONDELLE METR. RONDELLA METRICO	SCHEIBE METRISCH ARANDELA METRICO
8	***3777157M2***		**1**	TRANSMITTER	TRANSMETTEUR TRASMETTITORE	UEBERTRAGER TRANSMISOR
9	390972X1		**6**	WASHER METRIC	RONDELLE METR. RONDELLA METRICO	SCHEIBE METRISCH ARANDELA METRICO
10	3783659M1	M8X35	**1**	SCREW SPECIAL	VIS SPECIALE VITE SPECIALE	SPEZIALSCHRAUBE TORNILLO ESPEC.
11	3782120M2	A = 426,5MM	**1**	PEDALE	PEDALE PEDALE	PEDAL PEDAL
12	339123X1	M8X20	**4**	SCREW METRIC	VIS METRIQUE VITE METRICA	SCHRAUBE METR TORNILLO METRICO
13	339169X1		**3**	NUT METRIC	ECROU METRIQUE DADO METRICO	MUTTER METRISCH TUERCA METRICO
14	391290X1	∅ 5X30	**1**	PIN	GOUPILLE PERNO	BOLZEN PASADOR
15	3780939M1		**1**	CLEVIS PIN	AXE PERNO D'ATTACCO	SPLINTBOLZEN BULON CILINDRICO
16	3385604M1		**2**	BEARING	COUSSINET CUSCINETTO	LAGER COJINETE
17	1626321M2		**1**	SKATE	PATIN PATTINO	SCHLITTEN-KUFE PATIN
18	392404X1	M5X16	**2**	SCREW	VIS VITE	SCHRAUBE TORNILLO
19	3714488M3		**1**	STOP	BUTEE STOP	ANSCHLAG PARO
20	339070X1		**1**	NUT	ECROU DADO	MUTTER TUERCA
21	339169X1		**1**	NUT METRIC	ECROU METRIQUE DADO METRICO	MUTTER METRISCH TUERCA METRICO
22	3783659M1	M8X35	**1**	SCREW SPECIAL	VIS SPECIALE VITE SPECIALE	SPEZIALSCHRAUBE TORNILLO ESPEC.

Clutch Pedal And Linkage
Commande D'Embrayage
Kupplungspedal Und Gestae
Pedale Frizione E Leverismi
Pedal Del Embrague Y Mandos

20-95

With Full Powershift
Avec Full Powershift
Mit Full Powershift
Con Full Powershift
Con Full Powershift

1-ZD06-005-D

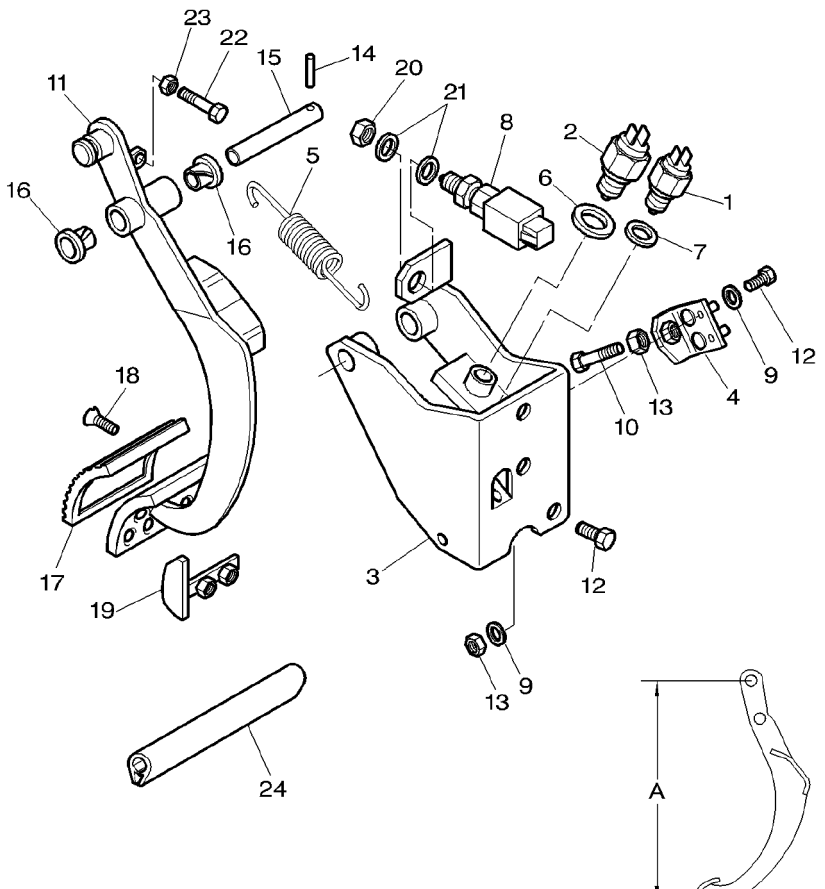

1	***3780580M1***		**1**	SWITCH,INDIRECT	CONTACTEUR INTERRUTTORE IND	KONTAKTSCHALTER CONTACTOR
2	***3778375M2***	➡| J032030	**1**	SWITCH,INDIRECT	CONTACTEUR INTERRUTTORE IND	KONTAKTSCHALTER CONTACTOR
2	***3783832M1***	➡ J032031	**1**	SWITCH,INDIRECT	CONTACTEUR INTERRUTTORE IND	KONTAKTSCHALTER CONTACTOR
3	3780941M3	➡| J032030	**1**	SUPPORT	SUPPORT SUPPORTO	LAGERUNG DISPOS.DE SOSTEN
3	3783836M1	➡ J032031	**1**	SUPPORT	SUPPORT SUPPORTO	LAGERUNG DISPOS.DE SOSTEN
4	3780942M3		**1**	STOP	BUTEE STOP	ANSCHLAG PARO
5	3780978M2		**1**	SPRING	RESSORT MOLLA	FEDER MUELLE
6	3783413M1	∅ 16,5X22,5X5 ➡| J032030	**1**	WASHER	RONDELLE RONDELLA	UNTERLEGSCHEIBE ARANDELA
7	390973X1	∅ 15-28X2,5	**1**	WASHER METRIC	RONDELLE METR. RONDELLA METRICO	SCHEIBE METRISCH ARANDELA METRICO
8	***3777157M2***		**1**	TRANSMITTER	TRANSMETTEUR TRASMETTITORE	UEBERTRAGER TRANSMISOR
9	390972X1		**6**	WASHER METRIC	RONDELLE METR. RONDELLA METRICO	SCHEIBE METRISCH ARANDELA METRICO
10	3783659M1	M8X35	**1**	SCREW SPECIAL	VIS SPECIALE VITE SPECIALE	SPEZIALSCHRAUBE TORNILLO ESPEC.
11	3782120M2	[A] A = 426,5MM	**1**	PEDAL	PEDALE PEDALE	PEDAL PEDAL
12	339123X1	M8X20	**4**	SCREW METRIC	VIS METRIQUE VITE METRICA	SCHRAUBE METR TORNILLO METRICO
13	339169X1		**3**	NUT METRIC	ECROU METRIQUE DADO METRICO	MUTTER METRISCH TUERCA METRICO
14	391290X1	∅ 5X30	**1**	PIN	GOUPILLE PERNO	BOLZEN PASADOR
15	3780939M1		**1**	CLEVIS PIN	AXE PERNO D'ATTACCO	SPLINTBOLZEN BULON CILINDRICO
16	3385604M1		**2**	BEARING	COUSSINET CUSCINETTO	LAGER COJINETE
17	1626321M2		**1**	SKATE	PATIN PATTINO	SCHLITTEN-KUFE PATIN
18	392404X1	M5X16	**2**	SCREW	VIS VITE	SCHRAUBE TORNILLO
19	3714488M3		**1**	STOP	BUTEE STOP	ANSCHLAG PARO
20	339070X1		**1**	NUT	ECROU DADO	MUTTER TUERCA
21	339794X1	∅ 14,5X27X1,5 ➡| J089008	**2**	WASHER METRIC	RONDELLE METR. RONDELLA METRICO	SCHEIBE METRISCH ARANDELA METRICO
22	3783659M1	M8X35 ➡ J089009	**1**	SCREW SPECIAL	VIS SPECIALE VITE SPECIALE	SPEZIALSCHRAUBE TORNILLO ESPEC.
23	339169X1	➡ J089009	**1**	NUT METRIC	ECROU METRIQUE DADO METRICO	MUTTER METRISCH TUERCA METRICO
24	1684844M1	◆▶ 80MM	**1**	SEAL	JOINT ETANCHEITE PARAOLIO	DICHTRING RETEN

1-ZD06-005-D

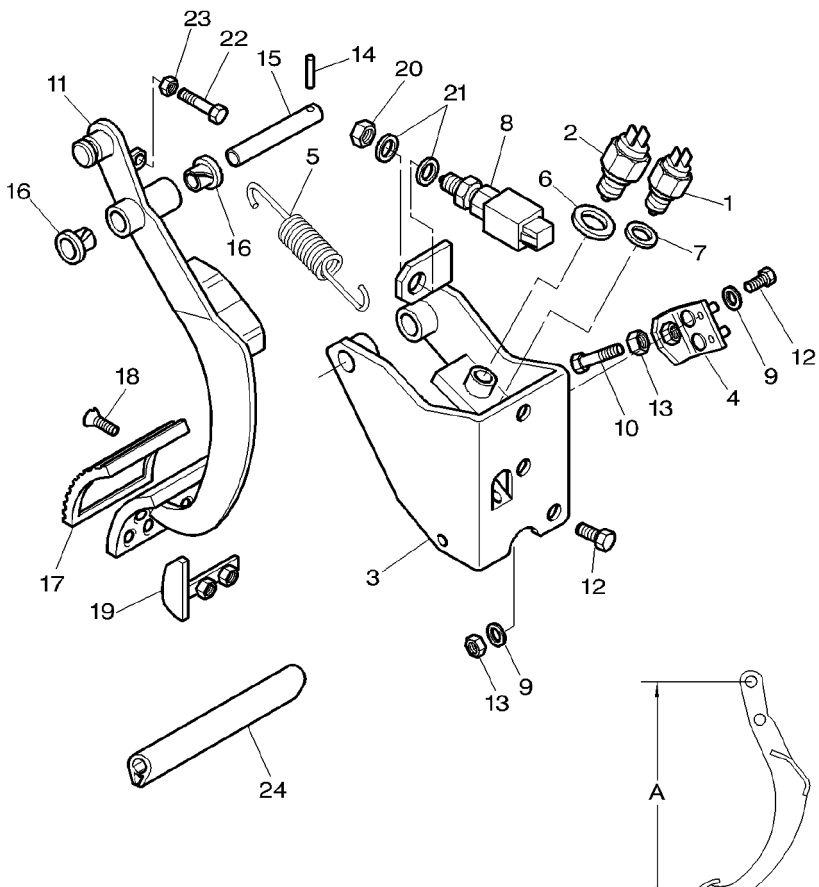

[A] TRACTOR WITH CAB
TRACTEURS AVEC CABINE
SCHLEPPER MIT KABINE
TRATTORE CON CABINA
TRACTOR CON CABINA

Clutch Control	Master Cylinder	20-100
Commande D Embrayage	Maitre Cylindre	
Kupplungsbetaetigung	Hauptbremszylinder	
Comando Frizione	Cilindro Principale	
Mando De Embrague	Cilindro Maestro	

1-ZD07-001-A

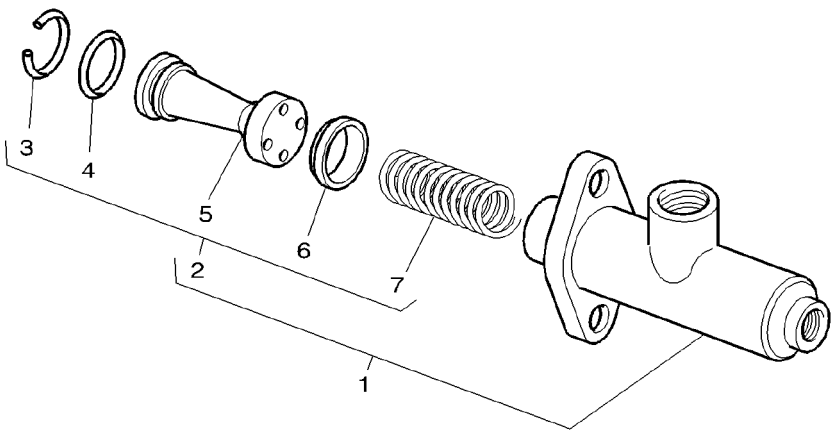

1	**1613986M4**	BENDIX	**1**	MAIN CYLINDER	MAITRE CYLINDRE CILINDRO PRINCIP	HAUPTZYLINDER CILINDRO PRINCIP
2	1642034M91	1	**1**	PARTS PACK	JEU PIECES PACCO RICAMBI	SATZ TEILE PAQUETE PIEZAS
3		2 ➡ REF NO 2	**1**	RING	ANNEAU ANELLO	RING ARO
4		2 ➡ REF NO 2	**1**	O RING	JOINT TORIQUE ANELLO OR	O−RING JUNTA TORICA
5		2 ➡ REF NO 2	**1**	PISTON	PISTON PISTONE	KOLBEN PISTON
6		2 ➡ REF NO 2	**1**	CUP	COUPELLE SCODELLINO	LAUFRING CUBETA
7		2 ➡ REF NO 2	**1**	SPRING	RESSORT MOLLA	FEDER MUELLE

Braking Assistance Accumulator
Accumulateur D' Assistance De Freinage
Akkumulator Hilfe Bremsung
Accumulatore D' Assitenza Di Frenatura
Acumulador D' Ayuda De Frenado

20-105

With Full Powershift
Avec Full Powershift
Mit Full Powershift
Con Full Powershift
Con Full Powershift

1-ZP02-001-B

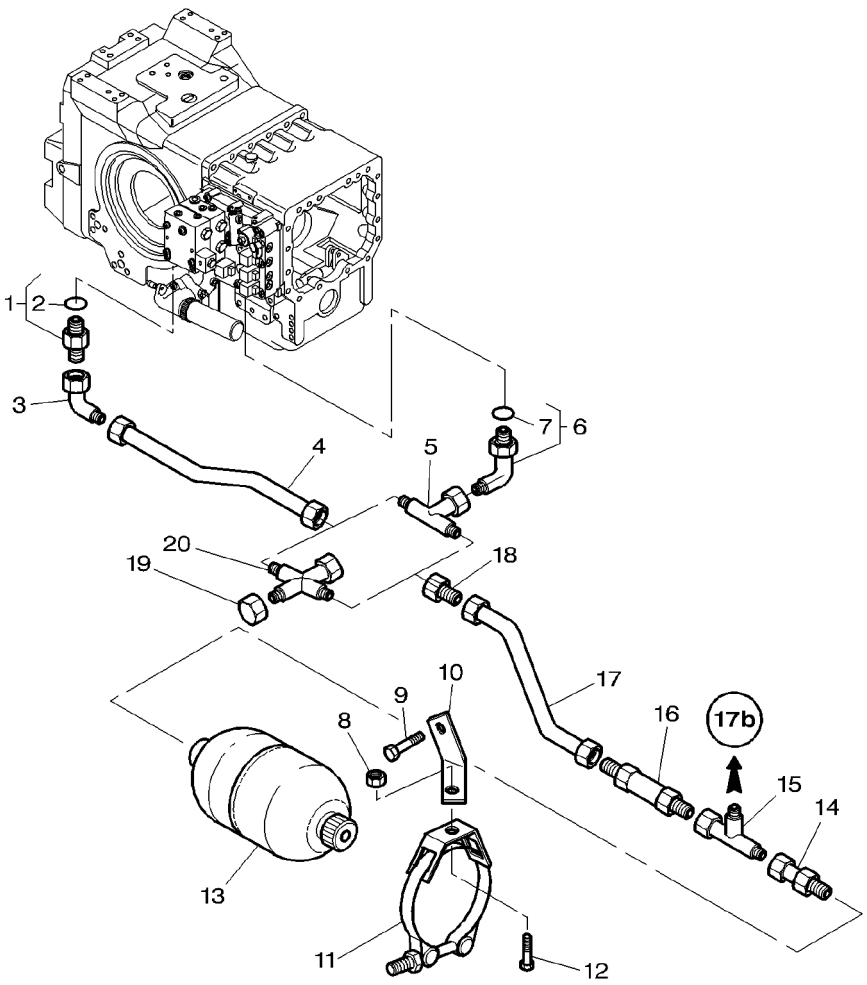

1	3019387X91		**1**	UNION	RACCORD RACCORDO	VERSCHRAUBUNG RACOR
2	3019398X1	1	**1**	O RING	JOINT TORIQUE ANELLO OR	O-RING JUNTA TORICA
3	**367386X1**		**1**	ELBOW	COUDE GOMITO	WINKELSTUECK CODO
4	3716780M92		**1**	TUBE	TUBE TUBO	ROHR TUBO
5	367261X1	➡ H322040	**1**	UNION	RACCORD RACCORDO	VERSCHRAUBUNG RACOR
6	3019416X91		**1**	ELBOW	COUDE GOMITO	WINKELSTUECK CODO
7	3019397X1	6	**1**	O RING	JOINT TORIQUE ANELLO OR	O-RING JUNTA TORICA
8	393764X1	M16X20	**1**	SCREW	VIS VITE	SCHRAUBE TORNILLO
9	339169X1		**1**	NUT METRIC	ECROU METRIQUE DADO METRICO	MUTTER METRISCH TUERCA METRICO
10	3794196M1	[A]	**1**	BRACKET	SUPPORT FIXATION SUPPORTO FISSAGG	HALTEARM SOPORTE
10	3793263M1	[B]	**1**	BRACKET	SUPPORT FIXATION SUPPORTO FISSAGG	HALTEARM SOPORTE
11	3619807M1		**1**	BRIDLE	BRIDE BRIGLIA	SPANNBAND BRIDA
12	339124X1	M8X16	**1**	SCREW METRIC	VIS METRIQUE VITE METRICA	SCHRAUBE METR TORNILLO METRICO
13	**3619551M1**		**1**	ACCUMULATOR	ACCUMULATEUR ACCUMULATORE	AKKUMULATOR ACUMULADOR
14	380018X1		**1**	CONNECTOR	BORNE MORSETTO	DOPPELNIPPEL CONECTOR
15	364735X1		**1**	UNION	RACCORD RACCORDO	VERSCHRAUBUNG RACOR
16	3790409M1		**1**	NON RETURN VALVE	CLAPET VALVOLA NO RITOR	RUCKSCHLAGVENTIL VALVULA DE GRANO
17	3792936M1		**1**	TUBE	TUBE TUBO	ROHR TUBO
18	377651X1		**1**	REDUCER	REDUCTEUR RIDUTTORE	REDUZIERSTUECK REDUCTOR
19	22833X	➡ H322041	**1**	CAP	CHAPEAU CAPPELLO	KAPPE TAPA
20	380059X1	➡ H322041	**1**	UNION	RACCORD RACCORDO	VERSCHRAUBUNG RACOR

[A] WITH PUMP 45CC
AVEC POMPE 45CC
MIT PUMPE 45CC
CON POMPA 45CC
CON BOMBA 45CC

Braking Assistance Accumulator Accumulateur D' Assistance De Freinage Akkumulator Hilfe Bremsung Accumulatore D' Assitenza Di Frenatura Acumulador D' Ayuda De Frenado	20-105	With Full Powershift Avec Full Powershift Mit Full Powershift Con Full Powershift Con Full Powershift

1-ZP02-001-B

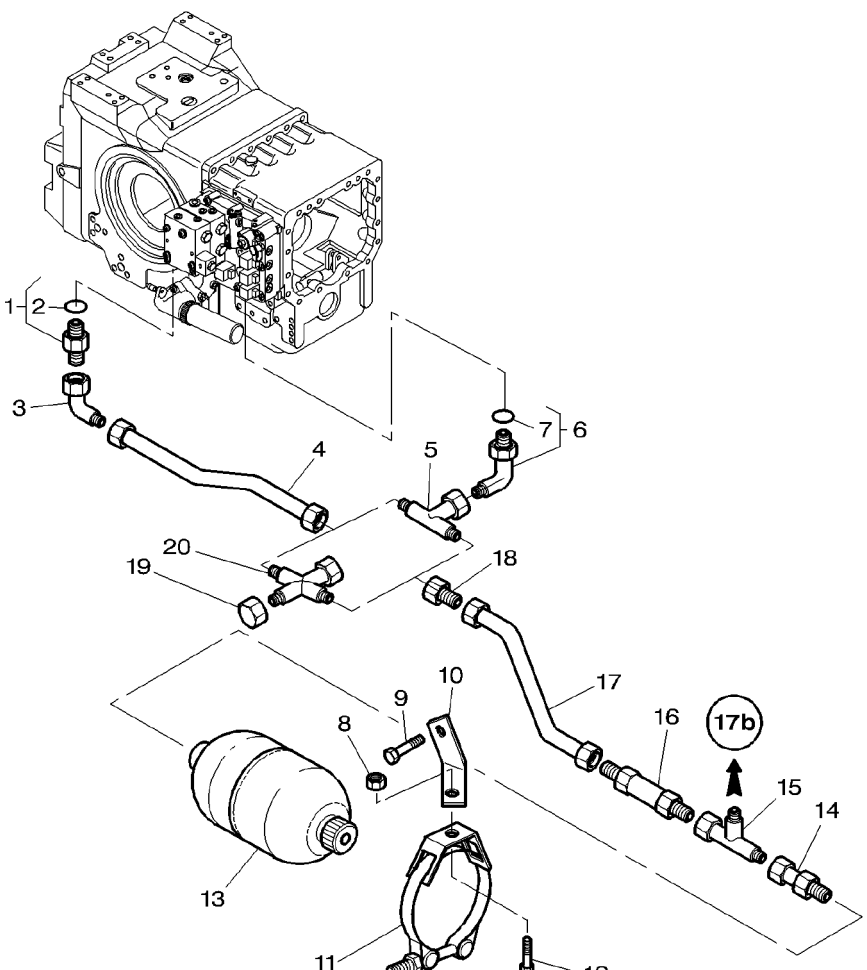

[B] WITH PUMP 60CC
AVEC POMPE 60CC
MIT PUMPE 60CC
CON POMPA 60CC
CON BOMBA 60CC

25

1-ZF29-001-C

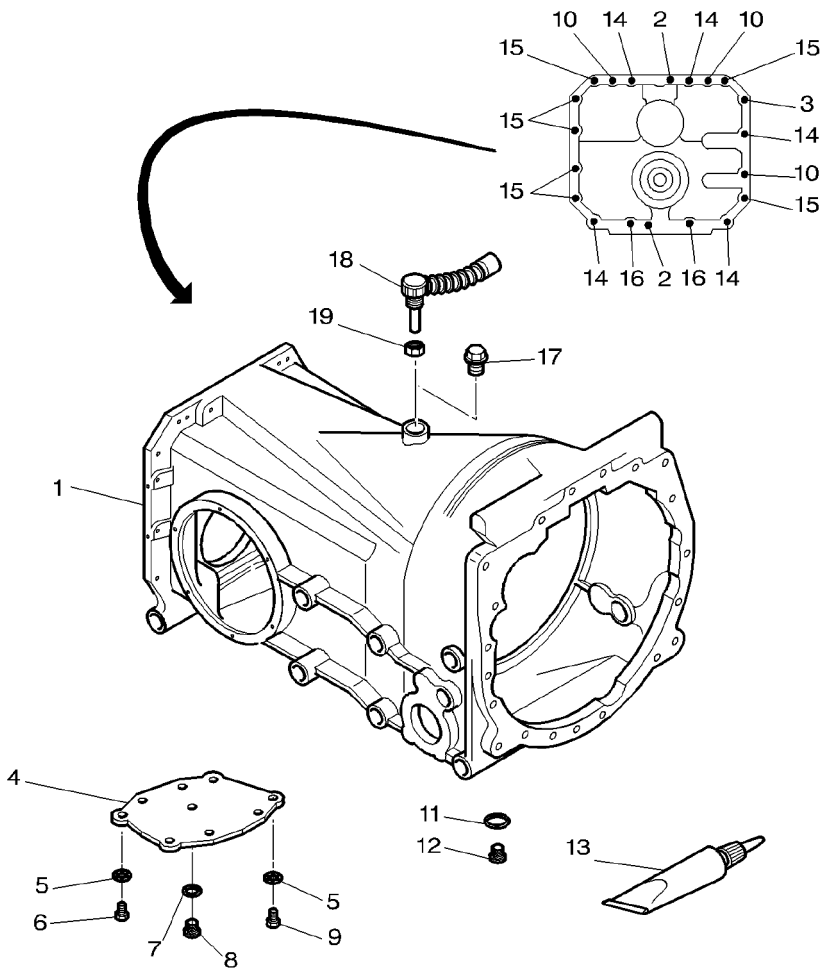

1	3716182M3		
2	3716360M1		
3	3010630X1	M16X35	
4	1610870M4		
5	353439X1		
6	354649X1	∅ 1/2"–13 ◀▶ 57 MM	
7	851258M1		
8	884691M1		
9	354276X1	∅ 1/2"–13 ◀▶ 32 MM	
9	353724X1	∅ 1/2"–13 ◀▶ 38 MM	
10	3009748X1	M16	
10	3716945M1	M16	
11	851258M1		
12	884691M1		
13	3900613M2		
14	3010007X1	M16x60	
15	3010008X1	M16x50	
16	3009311X1	M16x70	
17	339494X1		
18	***3583287M2***	[A]	
19	339592X1	[A] M20	

[A] WITH POWER SHUTTLE
AVEC INVERSEUR SOUS COUPLE
MIT UNTER DREHMOMENT
CON SOTTO COPPIA
CON INVERSOR SUB PAR

1	TRANSM.HOUSING	CARTER BV CARCASSA TRASMIS	GETRIEBEGEHAEUSE CAJA TRANSMISION
2	LOCATOR	PION DE CENTRAGE LOCALIZZATORE	ARRETIERUNG INDIC POSICION
1	SCREW METRIC	VIS METRIQUE VITE METRICA	SCHRAUBE METR TORNILLO METRICO
1	COVER	COUVERCLE COPERCHIO	DECKEL CUBIERTA
7	LOCK WASHER	RONDELLE FREIN ROSETTA ELASTICA	FEDERRING ARANDELA GROWER
1	BOLT UNC	BOULON UNC BULLONE UNC	MASCH.SCHRB.UNC PERNO UNC
1	O RING	JOINT TORIQUE ANELLO OR	O–RING JUNTA TORICA
1	PLUG	BOUCHON TAPPO	VERSCHL.STOPFEN TAPON
6	SCREW UNC	VIS UNC VITE UNC	SCHRAUBE UNC TORNILLO UNC
1	SCREW UNC	VIS UNC VITE UNC	SCHRAUBE UNC TORNILLO UNC
3	NUT	ECROU DADO	MUTTER TUERCA
3	STUD	GOUJON PRIGIONIERO	STEHBOLZEN ESPARRAGO
1	O RING	JOINT TORIQUE ANELLO OR	O–RING JUNTA TORICA
1	PLUG	BOUCHON TAPPO	VERSCHL.STOPFEN TAPON
X	LOCTITE	LOCTITE LOCTITE	LOCTITE LOCTITE
5	SCREW METRIC	VIS METRIQUE VITE METRICA	SCHRAUBE METR TORNILLO METRICO
7	SCREW METRIC	VIS METRIQUE VITE METRICA	SCHRAUBE METR TORNILLO METRICO
2	SCREW METRIC	VIS METRIQUE VITE METRICA	SCHRAUBE METR TORNILLO METRICO
1	PLUG	BOUCHON TAPPO	VERSCHL.STOPFEN TAPON
1	INDUCTIVE TAKER	CAPTEUR INDUCTIF SENSORE INDUTTIV	SENSOR GESCHWIN. CAPTADOR INDUCT.
1	NUT METRIC	ECROU METRIQUE DADO METRICO	MUTTER METRISCH TUERCA METRICO

1-ZF28-004-A

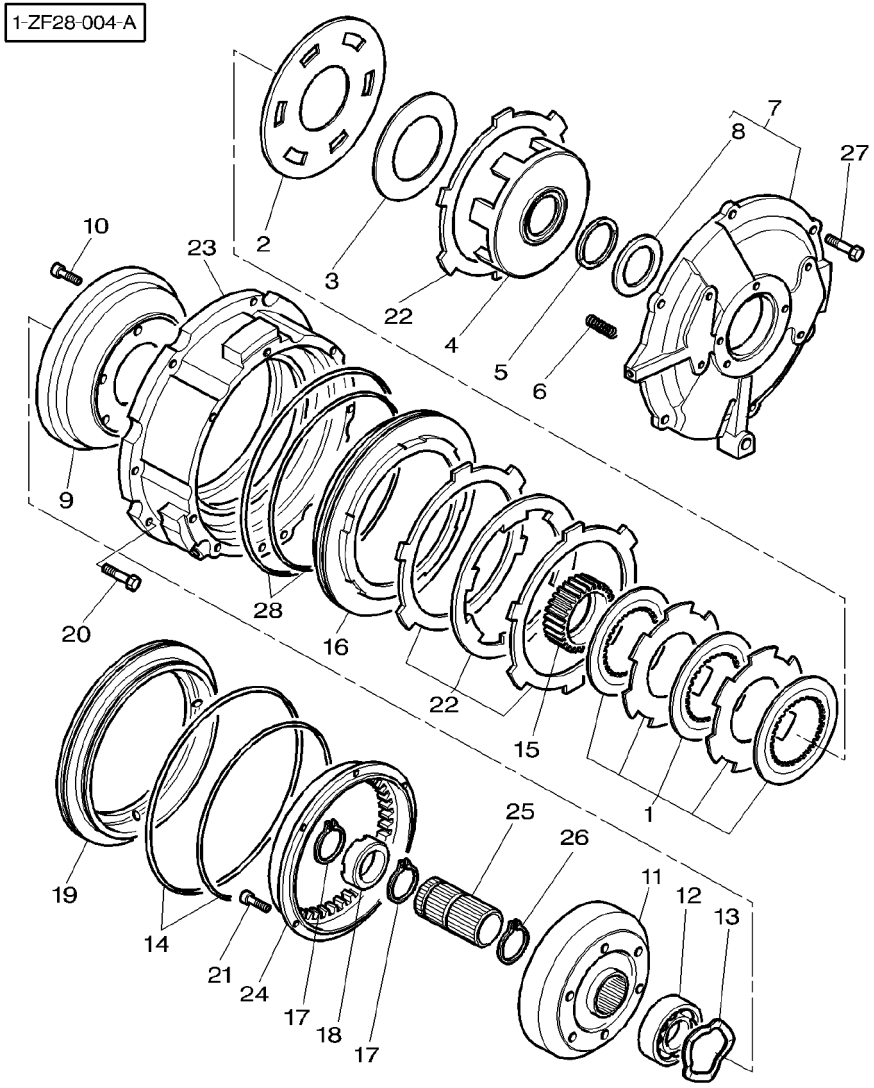

1	3900259M91		1	PARTS PACK	JEU PIECES PACCO RICAMBI	SATZ TEILE PAQUETE PIEZAS
2	3616749M1		1	PLATE	PLAQUE PIASTRA	PLATTE PLATO
3	3619014M1		1	CUP SPRING	RONDELLE RESSORT MOLLA CAPPELLOTT	TELLERFEDER CUBETA DE MUELLE
4	3617401M5		1	HOUSING	CARTER CARCASSA	GEHAEUSE ALOJAMIENTO
5	**3617352M3**		1	WASHER	RONDELLE RONDELLA	UNTERLEGSCHEIBE ARANDELA
6	3615346M1		12	SPRING	RESSORT MOLLA	FEDER MUELLE
7	3713686M11		1	COVER	COUVERCLE COPERCHIO	DECKEL CUBIERTA
8	3619257M1	7	1	WASHER	RONDELLE RONDELLA	UNTERLEGSCHEIBE ARANDELA
9	3712347M2		1	HOUSING	CARTER CARCASSA	GEHAEUSE ALOJAMIENTO
10	3712479M1	M8X30	6	SCREW	VIS VITE	SCHRAUBE TORNILLO
11	3615226M2		1	ANNULAR GEAR	COURONNE CORONA DENTATA	ZAHNKRANZ ENGRANAJE ANULAR
12	3010128X1		1	BEARING ASSY	ROULEMENT CUSCINETTO COMPL	RADIALLAGER RODAMIENTO RAD
13	3712430M1		1	WASHER	RONDELLE RONDELLA	UNTERLEGSCHEIBE ARANDELA
14	3900246M91		1	KIT, JOINT	JEU JOINTS KIT GIUNTO	DICHTUNGSSATZ JUEGO JUNTAS
15	3712431M1		1	HUB	MOYEU MOZZO	NABE CUBO
16	3615246M2		1	PISTON	PISTON PISTONE	KOLBEN PISTON
17	3900255M91		1	KIT, RING	JEU SEGMENTS KIT ANELLI	RINGSATZ AROS JUEGO
18	3616503M2		1	STOP	BUTEE STOP	ANSCHLAG PARO
19	3615247M1		1	PISTON	PISTON PISTONE	KOLBEN PISTON
20	3010347X1	M10x30	8	SCREW	VIS VITE	SCHRAUBE TORNILLO
21	3010479X1	M6X20	6	SCREW	VIS VITE	SCHRAUBE TORNILLO
22	3900258M91		1	PARTS PACK	JEU PIECES PACCO RICAMBI	SATZ TEILE PAQUETE PIEZAS
23	3619589M12		1	SPACER	ENTRETOISE DISTANZIALE	ABSTANDSTUECK PIEZA DISTANCIA
24	3615225M2		1	ANNULAR GEAR	COURONNE CORONA DENTATA	ZAHNKRANZ ENGRANAJE ANULAR
25	3619240M1		1	SLEEVE	MANCHON MANICOTTO	HUELSE MANCHA
26	1440528X1		1	CIRCLIP	SEGMENT D ARRET ANELLO D'ARRESTO	SICHERUNGSRING CIRCULITO

1-ZF28-004-A

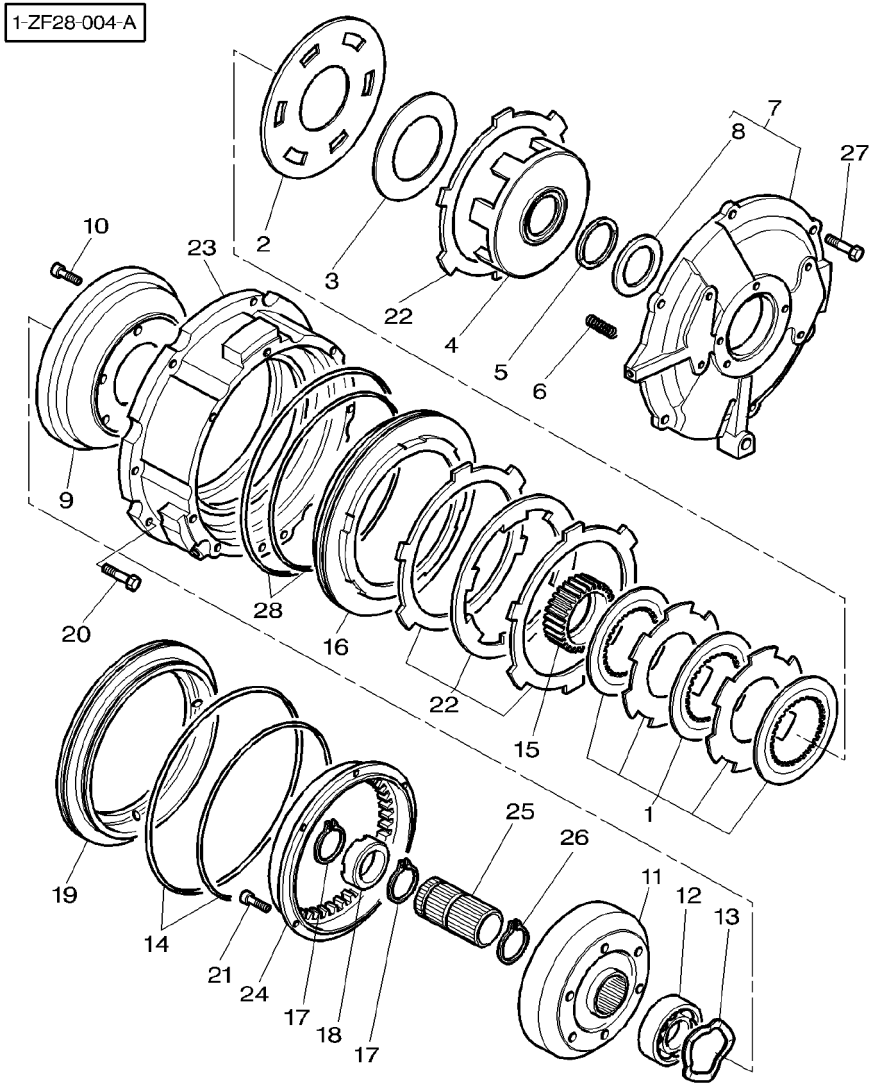

27	3010482X1	M8x55	**6** SCREW METRIC	VIS METRIQUE VITE METRICA	SCHRAUBE METR TORNILLO METRICO
28	3900245M91		**1** KIT, JOINT	JEU JOINTS KIT GIUNTO	DICHTUNGSSATZ JUEGO JUNTAS

1-ZF28-003-B

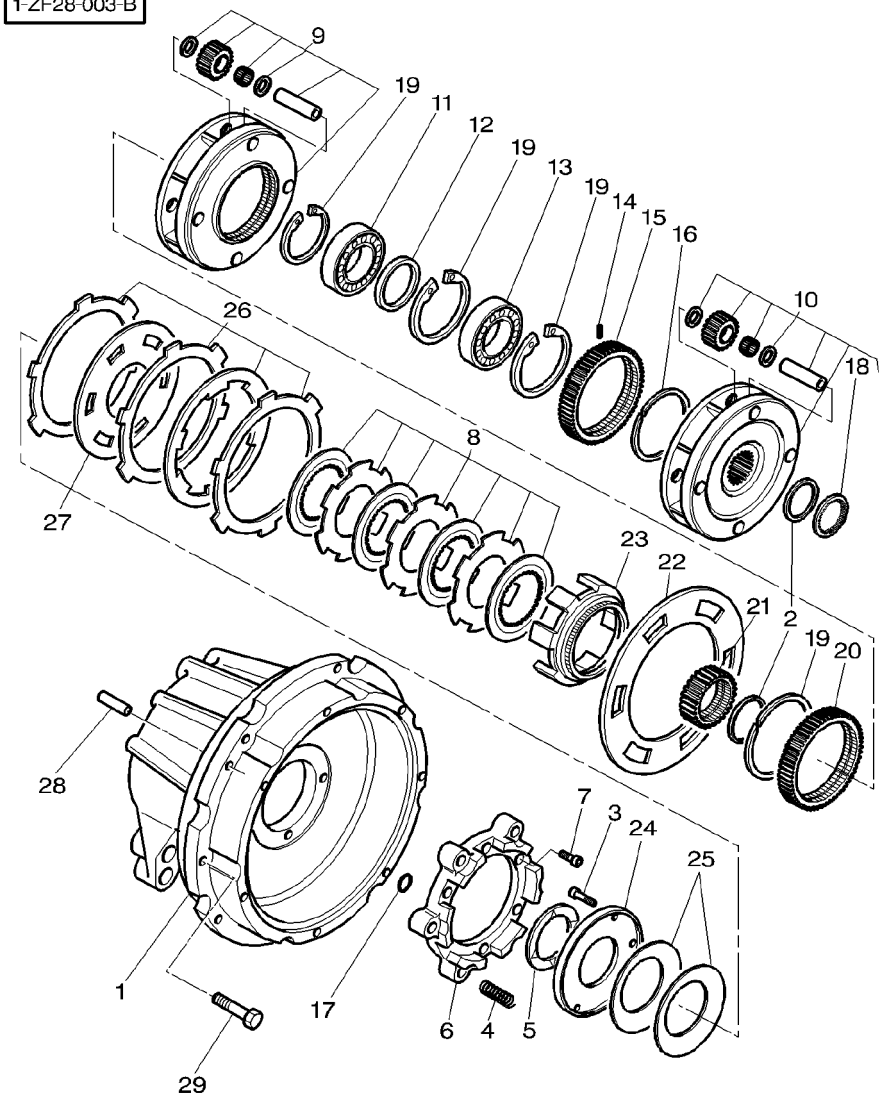

1	3617677M12			**1**	CASE ASSY	BOITIER CARCASSA COMPLET	GEHAEUSE KPL CAJA COMPLETA
2	3615467M1	⧗	1,2MM	**X**	CHOCK	CALE PASSACAVO	UNTERLEG-KEIL CALZA
2	3615468M1	⧗	0,4MM	**X**	CHOCK	CALE PASSACAVO	UNTERLEG-KEIL CALZA
2	3619144M1	⧗	0,2MM	**X**	CHOCK	CALE PASSACAVO	UNTERLEG-KEIL CALZA
2	3712691M1	⧗	0,3MM	**X**	CHOCK	CALE PASSACAVO	UNTERLEG-KEIL CALZA
3	3010479X1	M6X20		**6**	SCREW	VIS VITE	SCHRAUBE TORNILLO
4	3616783M1			**6**	SPRING	RESSORT MOLLA	FEDER MUELLE
5	**3617352M3**			**1**	WASHER	RONDELLE RONDELLA	UNTERLEGSCHEIBE ARANDELA
6	3617349M2			**1**	HOUSING	CARTER CARCASSA	GEHAEUSE ALOJAMIENTO
7	3010346X1	M8X20		**6**	SCREW	VIS VITE	SCHRAUBE TORNILLO
8	3900248M91			**1**	KIT, CLUTCH	JEU EMBRAYAGE KIT FRIZIONE	KUPPLUNGSATZ EMBRAGUE JUEGO
9	**3618723M10**			**1**	CARRIER	PORTE SATELLITES SUPPORTO SATELL.	TRAEGER PORTADOR
10	3618722M12			**1**	CARRIER	PORTE SATELLITES SUPPORTO SATELL.	TRAEGER PORTADOR
11	3010128X1			**1**	BEARING ASSY	ROULEMENT CUSCINETTO COMPL	RADIALLAGER RODAMIENTO RAD
12	3615444M1			**1**	SPACER	ENTRETOISE DISTANZIALE	ABSTANDSTUECK PIEZA DISTANCIA
13	3010128X1			**1**	BEARING ASSY	ROULEMENT CUSCINETTO COMPL	RADIALLAGER RODAMIENTO RAD
14	3010153X1			**3**	PIN	GOUPILLE PERNO	BOLZEN PASADOR
15	3615232M2			**1**	PLANET	PLANETAIRE PLANETARIO	PLANETENRAD PLANETARIO
16	3617193M1			**1**	RING	ANNEAU ANELLO	RING ARO
17	1440011X1			**2**	O RING	JOINT TORIQUE ANELLO OR	O-RING JUNTA TORICA
18	3619913M1	10		**1**	WASHER	RONDELLE RONDELLA	UNTERLEGSCHEIBE ARANDELA
19	3900256M91			**1**	KIT, RING	JEU SEGMENTS KIT ANELLI	RINGSATZ AROS JUEGO
20	3615236M1			**1**	PLANET	PLANETAIRE PLANETARIO	PLANETENRAD PLANETARIO
21	3712354M1			**1**	HUB	MOYEU MOZZO	NABE CUBO
22	3617343M1			**1**	PLATE	PLAQUE PIASTRA	PLATTE PLATO
23	3618911M2			**1**	CASE ASSY	BOITIER CARCASSA COMPLET	GEHAEUSE KPL CAJA COMPLETA

1-ZF28-003-B

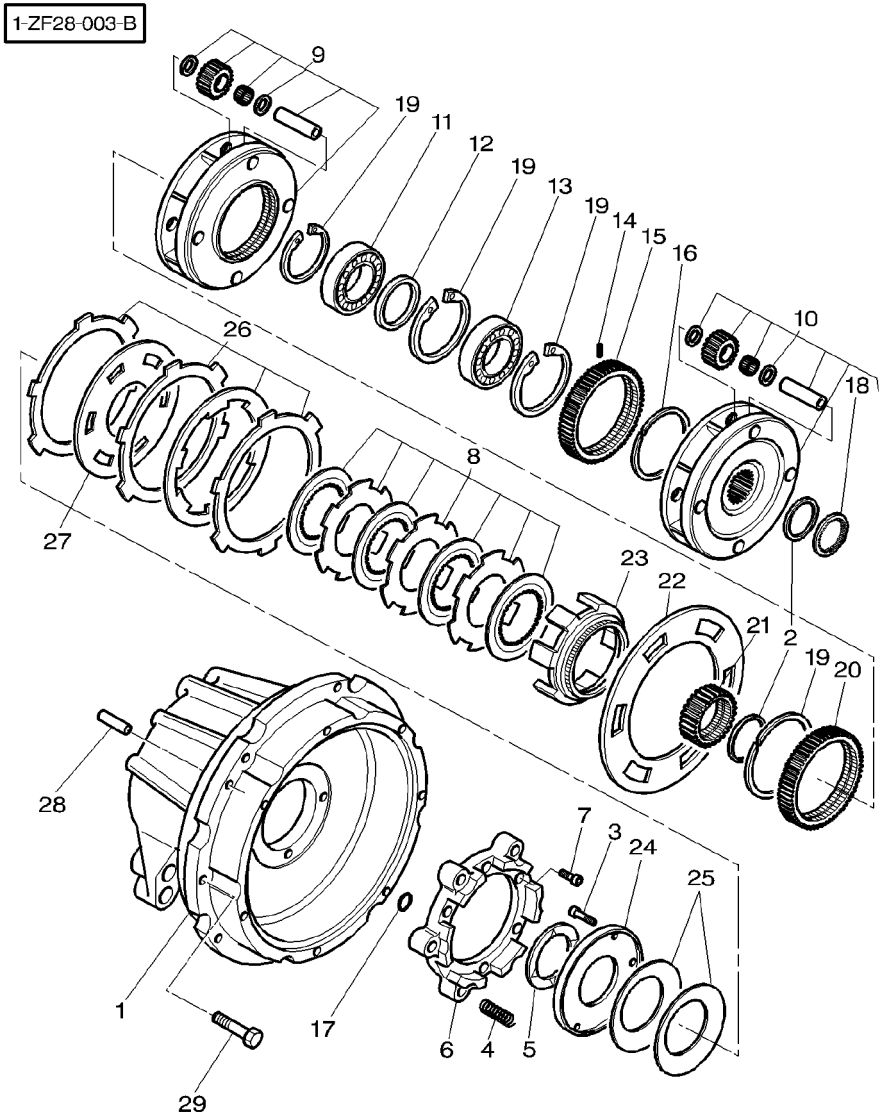

24	3791165M1		**1**	COVER	COUVERCLE COPERCHIO	DECKEL CUBIERTA
25	3619015M1		**2**	CUP SPRING	RONDELLE RESSORT MOLLA CAPPELLOTT	TELLERFEDER CUBETA DE MUELLE
26	3900247M91		**1**	KIT, CLUTCH	JEU EMBRAYAGE KIT FRIZIONE	KUPPLUNGSATZ EMBRAGUE JUEGO
27	3617345M1		**1**	PLATE	PLAQUE PIASTRA	PLATTE PLATO
28	1611168M4		**1**	CENTRALISER	PION CENTRALIZZATORE	FUEHRUNGSKORB CENTRALIZADOR
29	353691X1	3/8X25	**8**	SCREW UNC	VIS UNC VITE UNC	SCHRAUBE UNC TORNILLO UNC

Dynashift With Power Shuttle
Dynashift Avec Inverseur Sous Couple
Dynashift Mit Unter Drehmoment
Dynashift Con Sotto Coppia
Dynashift Con Inversor Sub Par

25-20

1-ZF77-003-A

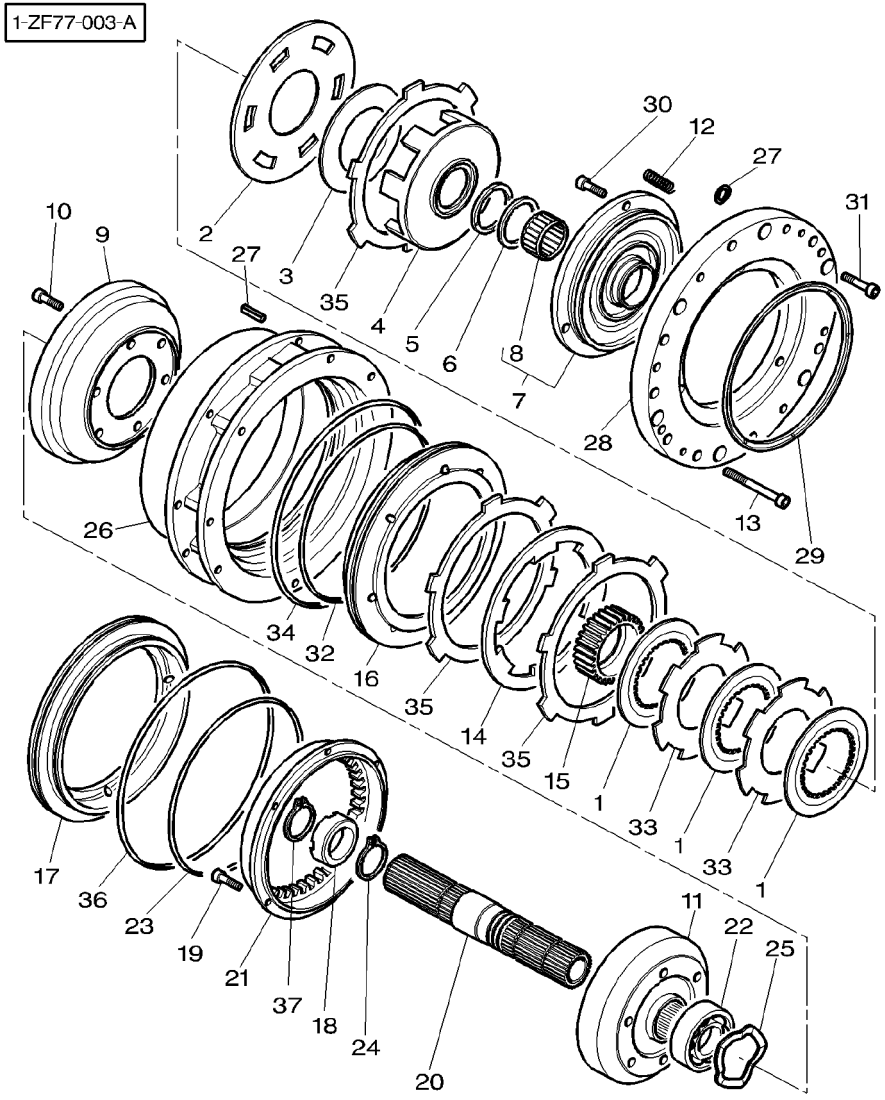

1	3616745M1		**3**	DISC	DISQUE DISCO	SCHEIBE DISCO
2	3616749M1		**1**	PLATE	PLAQUE PIASTRA	PLATTE PLATO
3	3619014M1		**1**	CUP SPRING	RONDELLE RESSORT MOLLA CAPPELLOTT	TELLERFEDER CUBETA DE MUELLE
4	3617401M5		**1**	HOUSING	CARTER CARCASSA	GEHAEUSE ALOJAMIENTO
5	**3617352M3**		**1**	WASHER	RONDELLE RONDELLA	UNTERLEGSCHEIBE ARANDELA
6	3790353M1		**1**	WASHER	RONDELLE RONDELLA	UNTERLEGSCHEIBE ARANDELA
7	3793599M11		**1**	BEARING CARRIER	PALIER CUSCINETTO SUPP-	LAGER-GEHAEUSE TEJUELO
8	3382235M1	7	**1**	NEEDLE CAGE	CAGE A AIGUILLES PORTAGHI	NADELKAEFIG CAJA DE AGUJAS
9	3712347M2		**1**	HOUSING	CARTER CARCASSA	GEHAEUSE ALOJAMIENTO
10	3712479M1	M8X30	**6**	SCREW	VIS VITE	SCHRAUBE TORNILLO
11	3615226M2		**1**	ANNULAR GEAR	COURONNE CORONA DENTATA	ZAHNKRANZ ENGRANAJE ANULAR
12	3615346M1		**12**	SPRING	RESSORT MOLLA	FEDER MUELLE
13	3794522M1	3/8"X 146	**8**	SCREW	VIS VITE	SCHRAUBE TORNILLO
14	3616742M1		**1**	COUNTERPLATE	CONTRE PLAQUE CONTROPIASTRA	GEGENPLATTE CONTRAPLACA
15	3712431M1		**1**	HUB	MOYEU MOZZO	NABE CUBO
16	3615246M2		**1**	PISTON	PISTON PISTONE	KOLBEN PISTON
17	3615247M1		**1**	PISTON	PISTON PISTONE	KOLBEN PISTON
18	3616503M2		**1**	STOP	BUTEE STOP	ANSCHLAG PARO
19	3010479X1	M6X20	**6**	SCREW	VIS VITE	SCHRAUBE TORNILLO
20	3793593M1		**1**	INPUT SHAFT	ARBRE D ENTREE ALBERO ENTRATA	ANTRIEB WELLE EJE PRIMARIO
21	3615225M2		**1**	ANNULAR GEAR	COURONNE CORONA DENTATA	ZAHNKRANZ ENGRANAJE ANULAR
22	3010128X1		**1**	BEARING ASSY	ROULEMENT CUSCINETTO COMPL	RADIALLAGER RODAMIENTO RAD
23	359130X1	∅ 221,84 X 3,53MM	**1**	O RING	JOINT TORIQUE ANELLO OR	O-RING JUNTA TORICA
24	1440528X1		**1**	CIRCLIP	SEGMENT D ARRET ANELLO D'ARRESTO	SICHERUNGSRING CIRCULITO
25	3712430M1		**1**	WASHER	RONDELLE RONDELLA	UNTERLEGSCHEIBE ARANDELA
26	3793586M11		**1**	CASE ASSY	BOITIER CARCASSA COMPLET	GEHAEUSE KPL CAJA COMPLETA

Dynashift With Power Shuttle
Dynashift Avec Inverseur Sous Couple
Dynashift Mit Unter Drehmoment
Dynashift Con Sotto Coppia
Dynashift Con Inversor Sub Par

25-20

1-ZF77-003-A

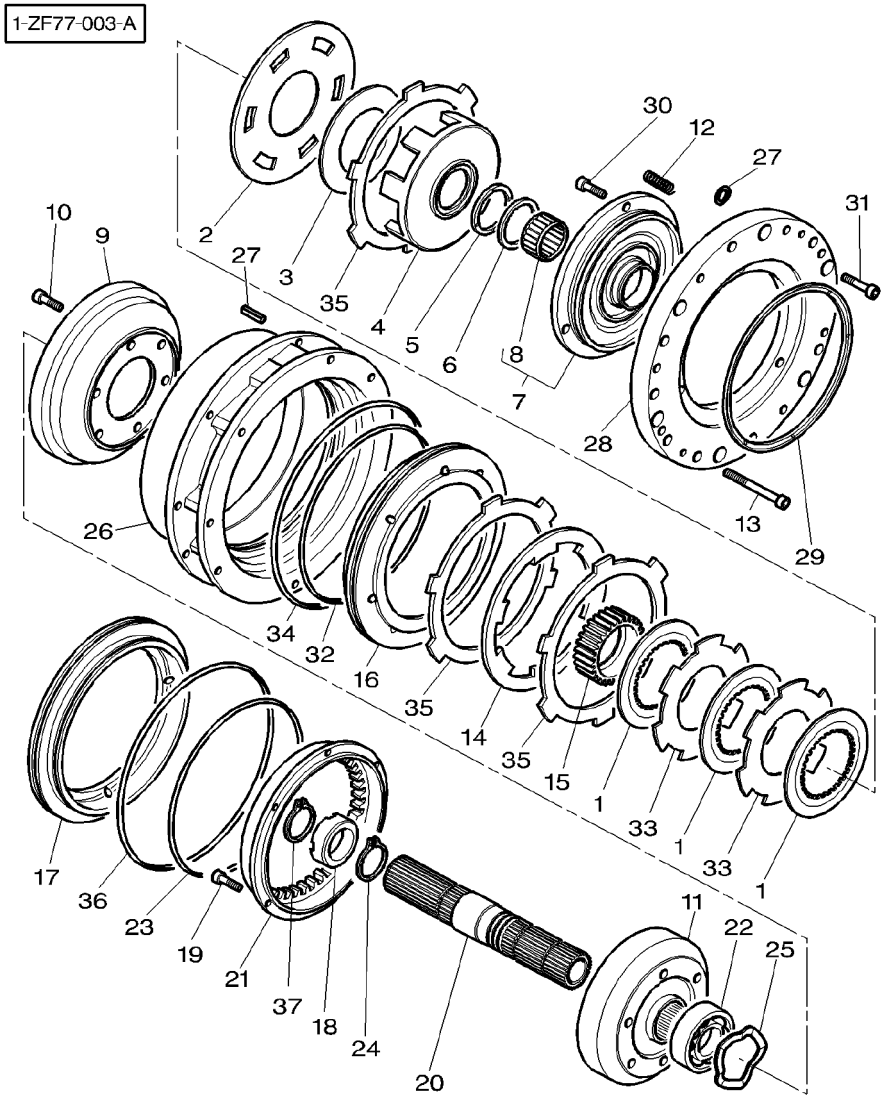

27	1611168M4		**1**	CENTRALISER	PION CENTRALIZZATORE	FUEHRUNGSKORB CENTRALIZADOR
28	3793592M11		**1**	COVER	COUVERCLE COPERCHIO	DECKEL CUBIERTA
29	3790354M1		**1**	RING	ANNEAU ANELLO	RING ARO
30	1444232X1	M8x16	**2**	SCREW	VIS VITE	SCHRAUBE TORNILLO
30	3010345X1	M6x16	**1**	SCREW	VIS VITE	SCHRAUBE TORNILLO
31	3010509X1	M8x20	**3**	SCREW	VIS VITE	SCHRAUBE TORNILLO
32	378287X1	∅ 234,54 X 3,53MM	**1**	O RING	JOINT TORIQUE ANELLO OR	O-RING JUNTA TORICA
33	3616746M1		**2**	PLATE	PLAQUE PIASTRA	PLATTE PLATO
34	378290X1	∅ 253,59 X 3,53MM	**1**	O RING	JOINT TORIQUE ANELLO OR	O-RING JUNTA TORICA
35	3616741M1		**3**	DISC	DISQUE DISCO	SCHEIBE DISCO
36	378289X1	∅ 247,24 X 3,53MM	**1**	O RING	JOINT TORIQUE ANELLO OR	O-RING JUNTA TORICA
37	3010138X1		**1**	SEGMENT	SEGMENT SEGMENTO	SEGMENT SEGMENTO

Dynashift With Power Shuttle
Dynashift Avec Inverseur Sous Couple
Dynashift Mit Unter Drehmoment
Dynashift Con Sotto Coppia
Dynashift Con Inversor Sub Par

25-25

1-ZF77-004-A

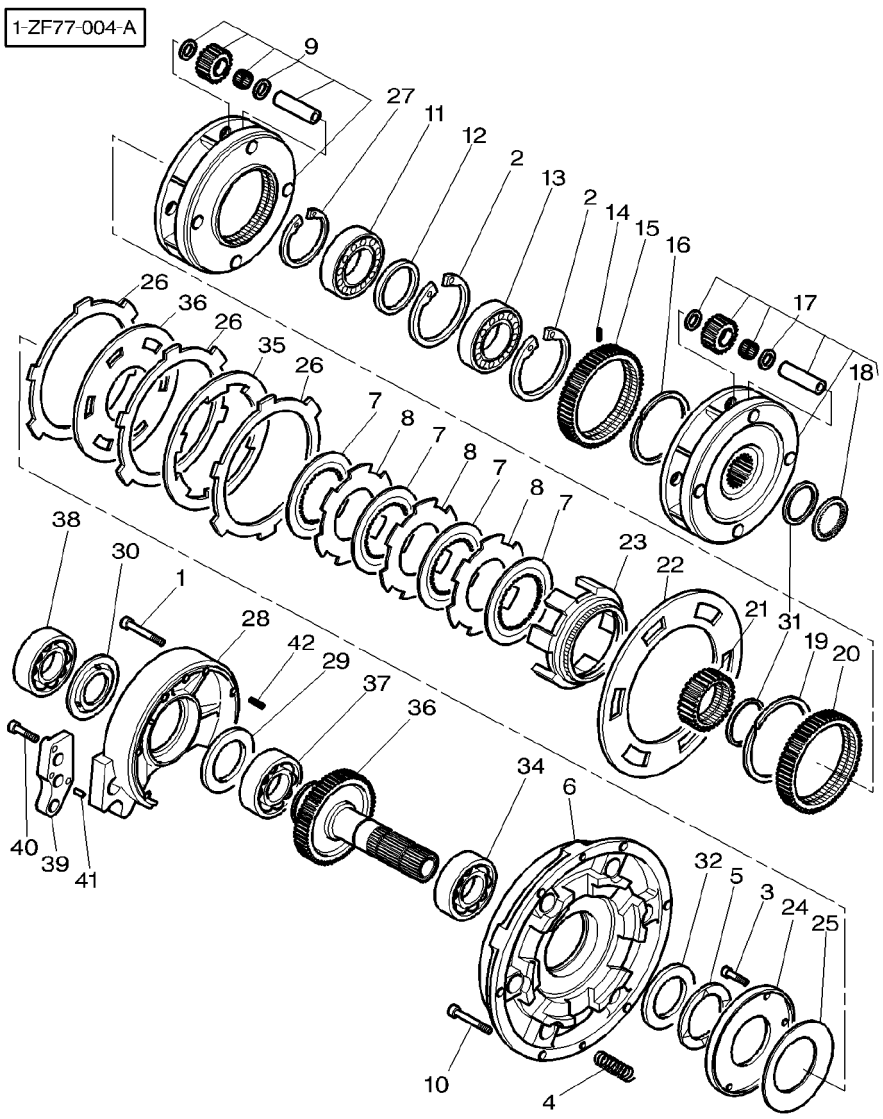

1	3010183X1	M8x70	**6**	SCREW	VIS VITE	SCHRAUBE TORNILLO
2	3006587X1		**2**	CLIP	CLIP FERMAGLIO	SCHELLE CRAPA RETEN
3	3010479X1	M6X20	**6**	SCREW	VIS VITE	SCHRAUBE TORNILLO
4	3616783M1		**6**	SPRING	RESSORT MOLLA	FEDER MUELLE
5	**3617352M3**		**1**	WASHER	RONDELLE RONDELLA	UNTERLEGSCHEIBE ARANDELA
6	3793588M11		**1**	CASE ASSY	BOITIER CARCASSA COMPLET	GEHAEUSE KPL CAJA COMPLETA
7	3617347M1		**4**	DISC	DISQUE DISCO	SCHEIBE DISCO
8	3617348M1		**3**	COUNTERPLATE	CONTRE PLAQUE CONTROPIASTRA	GEGENPLATTE CONTRAPLACA
9	**3618723M10**		**1**	CARRIER	PORTE SATELLITES SUPPORTO SATELL.	TRAEGER PORTADOR
10	3010989X1	M8X35	**6**	SCREW	VIS VITE	SCHRAUBE TORNILLO
11	3010128X1		**1**	BEARING ASSY	ROULEMENT CUSCINETTO COMPL	RADIALLAGER RODAMIENTO RAD
12	3615444M1		**1**	SPACER	ENTRETOISE DISTANZIALE	ABSTANDSTUECK PIEZA DISTANCIA
13	3010128X1		**1**	BEARING ASSY	ROULEMENT CUSCINETTO COMPL	RADIALLAGER RODAMIENTO RAD
14	3010153X1		**3**	PIN	GOUPILLE PERNO	BOLZEN PASADOR
15	3615232M2		**1**	PLANET	PLANETAIRE PLANETARIO	PLANETENRAD PLANETARIO
16	3617193M1		**1**	RING	ANNEAU ANELLO	RING ARO
17	3618722M12		**1**	CARRIER	PORTE SATELLITES SUPPORTO SATELL.	TRAEGER PORTADOR
18	3619913M1	17	**1**	WASHER	RONDELLE RONDELLA	UNTERLEGSCHEIBE ARANDELA
19	339605X1		**1**	CIRCLIP	SEGMENT D ARRET ANELLO D'ARRESTO	SICHERUNGSRING CIRCULITO
20	3615236M1		**1**	PLANET	PLANETAIRE PLANETARIO	PLANETENRAD PLANETARIO
21	3712354M1		**1**	HUB	MOYEU MOZZO	NABE CUBO
22	3617343M1		**1**	PLATE	PLAQUE PIASTRA	PLATTE PLATO
23	3618911M2		**1**	CASE ASSY	BOITIER CARCASSA COMPLET	GEHAEUSE KPL CAJA COMPLETA
24	3791165M1		**1**	COVER	COUVERCLE COPERCHIO	DECKEL CUBIERTA
25	3619015M1		**2**	CUP SPRING	RONDELLE RESSORT MOLLA CAPPELLOTT	TELLERFEDER CUBETA DE MUELLE
26	3617346M1		**3**	DISC	DISQUE DISCO	SCHEIBE DISCO

Dynashift With Power Shuttle
Dynashift Avec Inverseur Sous Couple
Dynashift Mit Unter Drehmoment
Dynashift Con Sotto Coppia
Dynashift Con Inversor Sub Par

25-25

1-ZF77-004-A

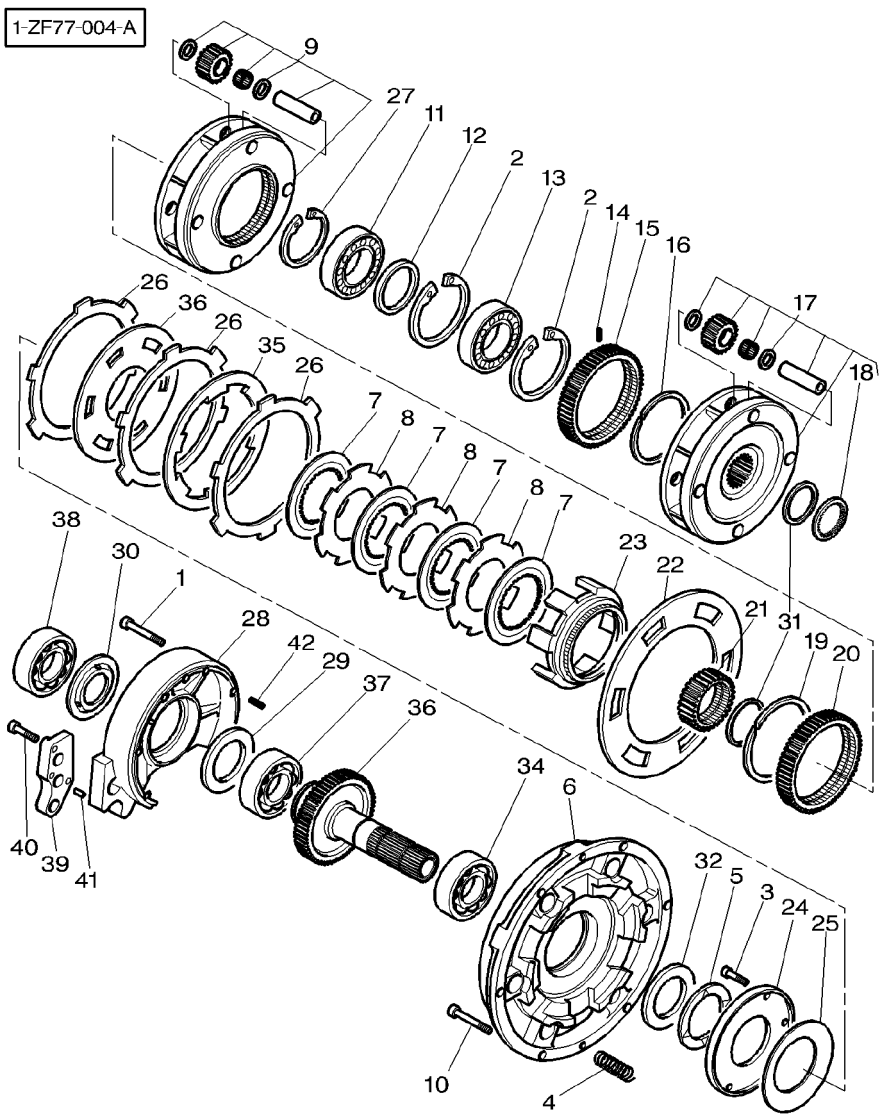

27	3617345M1		1	PLATE	PLAQUE PIASTRA	PLATTE PLATO
28	3793589M1		1	CASE ASSY	BOITIER CARCASSA COMPLET	GEHAEUSE KPL CAJA COMPLETA
29	3793601M1	⧗ 0,30 MM	X	CHOCK	CALE PASSACAVO	UNTERLEG-KEIL CALZA
29	3793602M1	⧗ 0,40 MM	X	CHOCK	CALE PASSACAVO	UNTERLEG-KEIL CALZA
29	3793603M1	⧗ 0,50 MM	X	CHOCK	CALE PASSACAVO	UNTERLEG-KEIL CALZA
30	3793604M1		1	DEFLECTOR	DEFLECTEUR DEFLETTORE	ABWEISBLECH DEFLECTOR
31	3615467M1	⧗ 1,2MM	X	CHOCK	CALE PASSACAVO	UNTERLEG-KEIL CALZA
31	3615468M1	⧗ 0,4MM	X	CHOCK	CALE PASSACAVO	UNTERLEG-KEIL CALZA
31	3619144M1	⧗ 0,2MM	X	CHOCK	CALE PASSACAVO	UNTERLEG-KEIL CALZA
31	3712691M1	⧗ 0,3MM	X	CHOCK	CALE PASSACAVO	UNTERLEG-KEIL CALZA
32	3790353M1		1	WASHER	RONDELLE RONDELLA	UNTERLEGSCHEIBE ARANDELA
33	3793595M1	36	1	PINION	PIGNON PIGNONE	RITZEL PINON
33	3793597M1	35	1	PINION	PIGNON PIGNONE	RITZEL PINON
34	3010956X91		1	BEARING ASSY	ROULEMENT CUSCINETTO COMPL	RADIALLAGER RODAMIENTO RAD
35	3617344M1		1	COUNTERPLATE	CONTRE PLAQUE CONTROPIASTRA	GEGENPLATTE CONTRAPLACA
36	3617345M1		1	PLATE	PLAQUE PIASTRA	PLATTE PLATO
37	3010950X91		1	BEARING ASSY	ROULEMENT CUSCINETTO COMPL	RADIALLAGER RODAMIENTO RAD
38	3712170M1		1	BEARING ASSY	ROULEMENT CUSCINETTO COMPL	RADIALLAGER RODAMIENTO RAD
39	3793590M1		1	SUPPORT	SUPPORT SUPPORTO	LAGERUNG DISPOS.DE SOSTEN
40	1440349X1	M8X30	1	SCREW METRIC	VIS METRIQUE VITE METRICA	SCHRAUBE METR TORNILLO METRICO
41	3716287M2		2	PIN	GOUPILLE PERNO	BOLZEN PASADOR
42	1611168M4		1	CENTRALISER	PION CENTRALIZZATORE	FUEHRUNGSKORB CENTRALIZADOR

1-ZF30-001-A

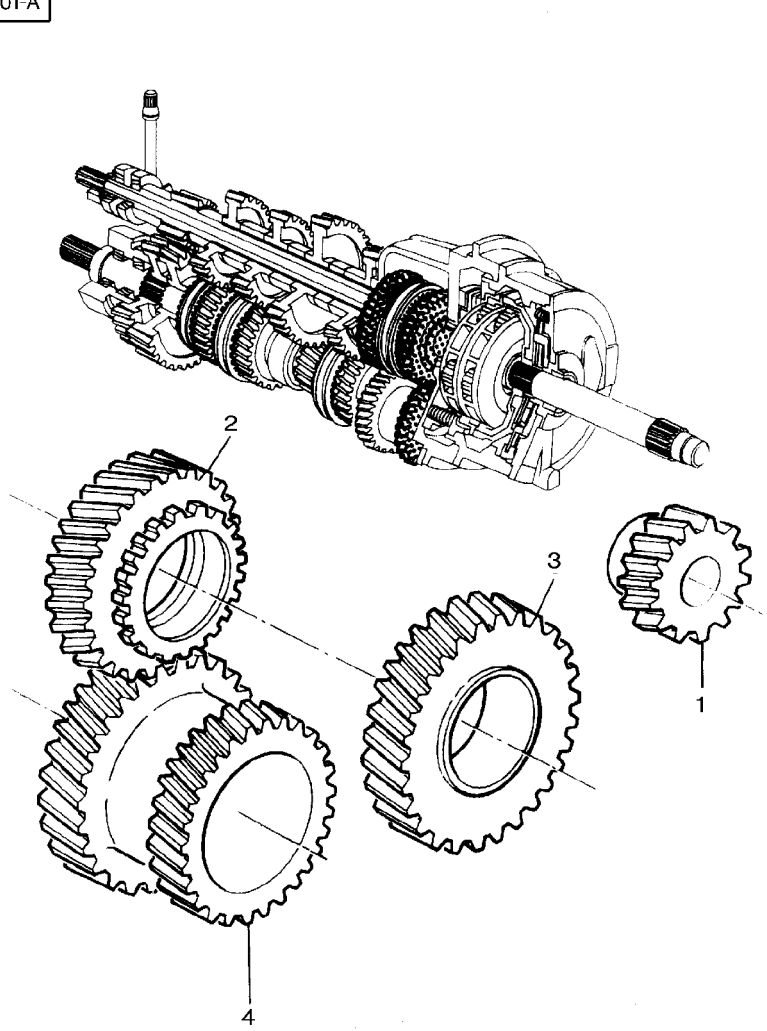

1	3617737M4	21	1	PINION	PIGNON PIGNONE	RITZEL PINON
2	3618974M3	35	1	PINION	PIGNON PIGNONE	RITZEL PINON
2	3618996M3	36	1	PINION	PIGNON PIGNONE	RITZEL PINON
3	3616020M2	32	1	PINION	PIGNON PIGNONE	RITZEL PINON
4	3618976M5	28/30	1	PINION	PIGNON PIGNONE	RITZEL PINON
4	3618975M5	28/29	1	PINION	PIGNON PIGNONE	RITZEL PINON

1-ZF31-003-A

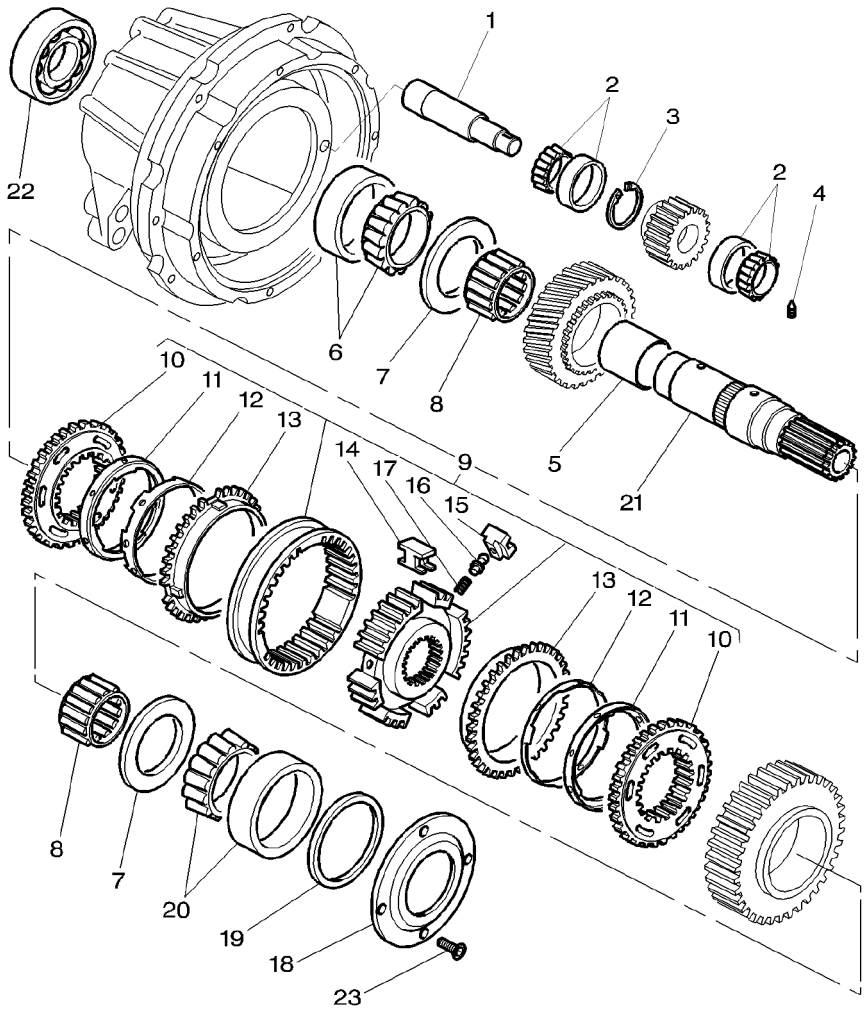

1	3618103M2			1	CLEVIS PIN	AXE PERNO D'ATTACCO	SPLINTBOLZEN BULON CILINDRICO
2	3010151X91			2	BEARING TAPER	ROULEMNT CONIQUE CUSCINETTO CONIC	KEGELLAGER RODAMIENTO CONI
3	3792376M1	⧗	2,22–2,27MM	1	SEGMENT	SEGMENT SEGMENTO	SEGMENT SEGMENTO
3	3618104M1	⧗	2,28–2,33MM	1	SEGMENT	SEGMENT SEGMENTO	SEGMENT SEGMENTO
3	3618880M1	⧗	2,36–2,41MM	X	SEGMENT	SEGMENT SEGMENTO	SEGMENT SEGMENTO
3	3617744M1	⧗	2,50MM	X	SEGMENT	SEGMENT SEGMENTO	SEGMENT SEGMENTO
4	3386683M1			1	SCREW SPECIAL	VIS SPECIALE VITE SPECIALE	SPEZIALSCHRAUBE TORNILLO ESPEC.
5	3617308M3			1	BUSH	BAGUE BOCCOLA	BUCHSE CASQUILLO
6	3010115X91			1	BEARING TAPER	ROULEMNT CONIQUE CUSCINETTO CONIC	KEGELLAGER RODAMIENTO CONI
7	3616860M1			2	WASHER	RONDELLE RONDELLA	UNTERLEGSCHEIBE ARANDELA
8	3619780M1			2	NEEDLE CAGE	CAGE A AIGUILLES PORTAGHI	NADELKAEFIG CAJA DE AGUJAS
9	3714238M94			1	SYNCHRO GEAR	SYNCHRO SINCRONIZZATORE	SYNCHRONRING SINCRONIZADOR
10	3902257M2	9		2	ANNULAR GEAR	COURONNE CORONA DENTATA	ZAHNKRANZ ENGRANAJE ANULAR
11	3902633M1	9		2	BUSH	BAGUE BOCCOLA	BUCHSE CASQUILLO
12	3902682M1	9		2	CONE	CONE CONO	KONUS CONO
13	**3900986M1**	9		2	RING	ANNEAU ANELLO	RING ARO
14	3900979M1	9		3	SKATE	PATIN PATTINO	SCHLITTEN-KUFE PATIN
15	3771355M1	9		3	POPPET	POUSSOIR SUPPORTO VERTIC.	VENTILKEGEL CONTRAPUNTA
16	3771353M1	9		3	PIN	GOUPILLE PERNO	BOLZEN PASADOR
17	3771354M1	9		3	SPRING	RESSORT MOLLA	FEDER MUELLE
18	3618912M2			1	WASHER	RONDELLE RONDELLA	UNTERLEGSCHEIBE ARANDELA
19	**3383476M1**	⧗	0,5MM	X	SHIM	CALE REGLAGE SPESSORE	EINSTELLBLECH CALCE
19	3383477M1	⧗	0,6MM	X	SHIM	CALE REGLAGE SPESSORE	EINSTELLBLECH CALCE
19	3383516M1	⧗	0,7MM	X	SHIM	CALE REGLAGE SPESSORE	EINSTELLBLECH CALCE
19	3383517M1	⧗	0,8MM	X	SHIM	CALE REGLAGE SPESSORE	EINSTELLBLECH CALCE
19	3617236M1	⧗	0,1MM	X	CHOCK	CALE PASSACAVO	UNTERLEG-KEIL CALZA

Dynashift Transmission **Boite De Vitesses Dynashift** **Dynashift Getriebe** **Trasmissione Dynashift** **Transmision Dynashift**	**Input Shaft With Synchromesh** **Arbre D'Entree Avec Synchro.** **Antriebswelle Mit Synchronisation** **Albero Primario Senza Synchromesh** **Eje Impulsor Con Cambio Sincro.**	**25-35**	**With Double Cone** **Avec Doubles Cones** **Mit Doppe Konus** **Con Dopio Cone** **Con Doble Cone**

1-ZF31-003-A

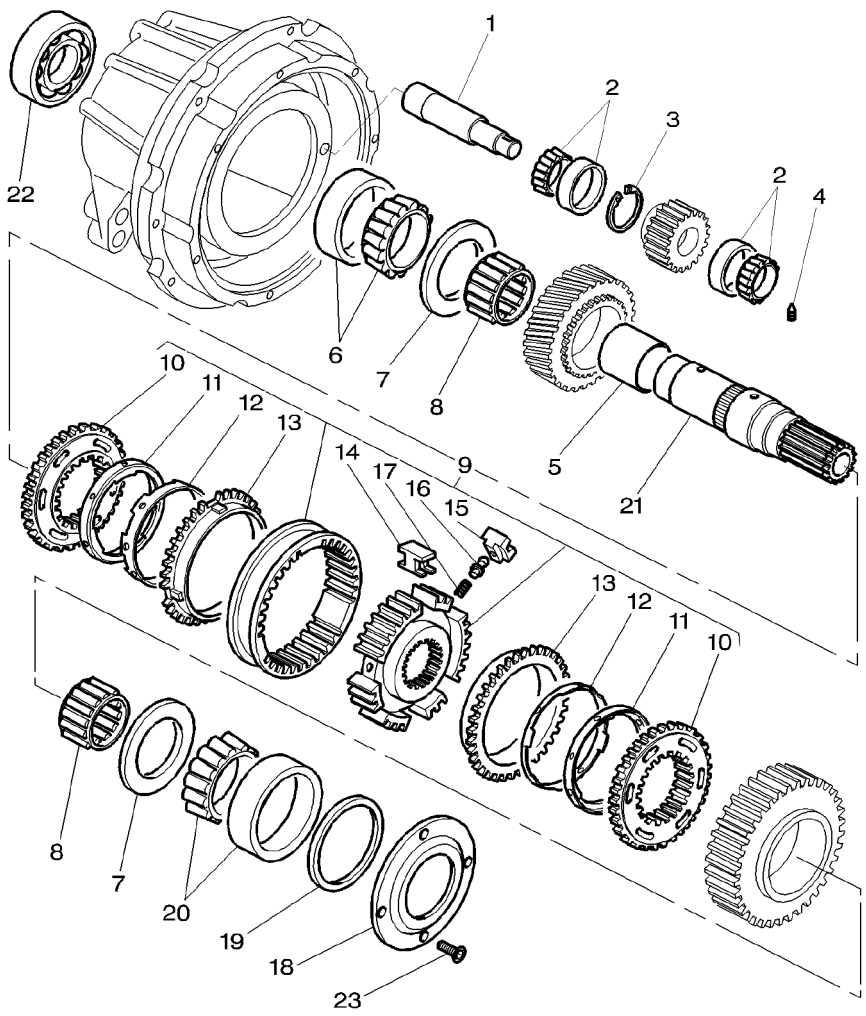

19	3617237M1	⧗ 0,2MM	X	CHOCK	CALE PASSACAVO	UNTERLEG-KEIL CALZA
19	3617238M1	⧗ 0,4MM	X	CHOCK	CALE PASSACAVO	UNTERLEG-KEIL CALZA
19	3617243M1	⧗ 0,05MM	X	CHOCK	CALE PASSACAVO	UNTERLEG-KEIL CALZA
20	3010115X91		1	BEARING TAPER	ROULEMNT CONIQUE CUSCINETTO CONIC	KEGELLAGER RODAMIENTO CONI
21	**3619042M3**		1	SHAFT	ARBRE ALBERO	WELLE ARBOL
22	3712170M1		1	BEARING ASSY	ROULEMENT CUSCINETTO COMPL	RADIALLAGER RODAMIENTO RAD
23	3010348X1	M8x20	4	SCREW	VIS VITE	SCHRAUBE TORNILLO

1-ZF32-001-B

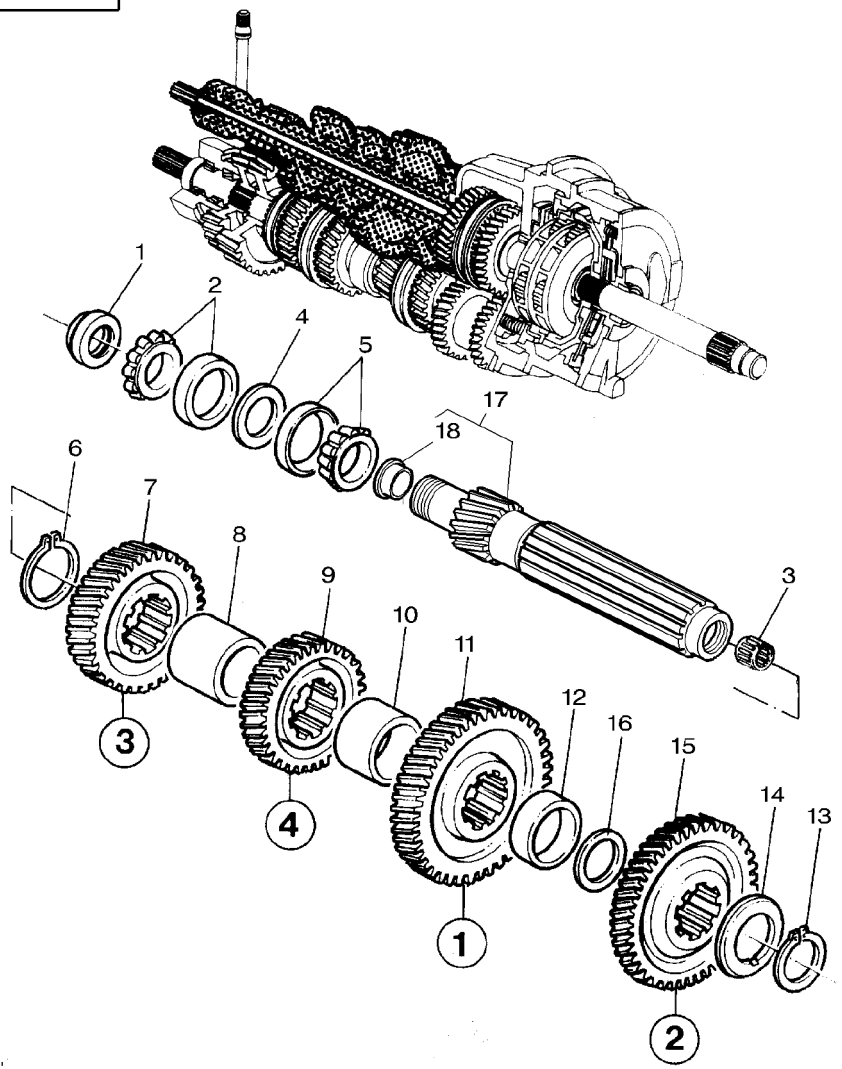

1	1614882M3			1	NUT	ECROU DADO	MUTTER TUERCA
2	3010040X91			1	BEARING ASSY	ROULEMENT CUSCINETTO COMPL	RADIALLAGER RODAMIENTO RAD
3	1441835X1			1	BEARING ASSY	ROULEMENT CUSCINETTO COMPL	RADIALLAGER RODAMIENTO RAD
4	3791942M1	⧗	4,22 MM	x	CHOCK	CALE PASSACAVO	UNTERLEG-KEIL CALZA
4	3791941M1	⧗	4,28 MM	x	CHOCK	CALE PASSACAVO	UNTERLEG-KEIL CALZA
4	3791940M1	⧗	4,34 MM	x	CHOCK	CALE PASSACAVO	UNTERLEG-KEIL CALZA
4	3791939M1	⧗	4,40 MM	x	CHOCK	CALE PASSACAVO	UNTERLEG-KEIL CALZA
4	3791927M1	⧗	4,46 MM	x	CHOCK	CALE PASSACAVO	UNTERLEG-KEIL CALZA
5	3010034X91			1	BEARING ASSY	ROULEMENT CUSCINETTO COMPL	RADIALLAGER RODAMIENTO RAD
6	355921X1			1	RING	ANNEAU ANELLO	RING ARO
7	3618934M5	⚙	35	1	PINION	PIGNON PIGNONE	RITZEL PINON
8	3380192M2			1	SPACER	ENTRETOISE DISTANZIALE	ABSTANDSTUECK PIEZA DISTANCIA
9	3617272M3	⚙	30	1	PINION	PIGNON PIGNONE	RITZEL PINON
10	3583478M1			1	SPACER	ENTRETOISE DISTANZIALE	ABSTANDSTUECK PIEZA DISTANCIA
11	3618968M2	⚙	43	1	PINION	PIGNON PIGNONE	RITZEL PINON
12	3042898M2			1	SPACER	ENTRETOISE DISTANZIALE	ABSTANDSTUECK PIEZA DISTANCIA
13	**831180M1**			1	RING	ANNEAU ANELLO	RING ARO
14	3042866M1			1	WASHER	RONDELLE RONDELLA	UNTERLEGSCHEIBE ARANDELA
15	3618998M3	⚙	40	1	PINION	PIGNON PIGNONE	RITZEL PINON
16	3042847M1	⧗	0,40 MM	X	SHIM	CALE REGLAGE SPESSORE	EINSTELLBLECH CALCE
16	3792470M1	⧗	0,6MM	X	CHOCK	CALE PASSACAVO	UNTERLEG-KEIL CALZA
16	3042848M2	⧗	1MM	X	SHIM	CALE REGLAGE SPESSORE	EINSTELLBLECH CALCE
17	3791966M91	⚙	17	1	SHAFT	ARBRE ALBERO	WELLE ARBOL
17	3793583M91	[B] ⚙	17	1	SHAFT	ARBRE ALBERO	WELLE ARBOL
18	3791932M1	17		1	SPACER	ENTRETOISE DISTANZIALE	ABSTANDSTUECK PIEZA DISTANCIA

1-ZF32-001-B

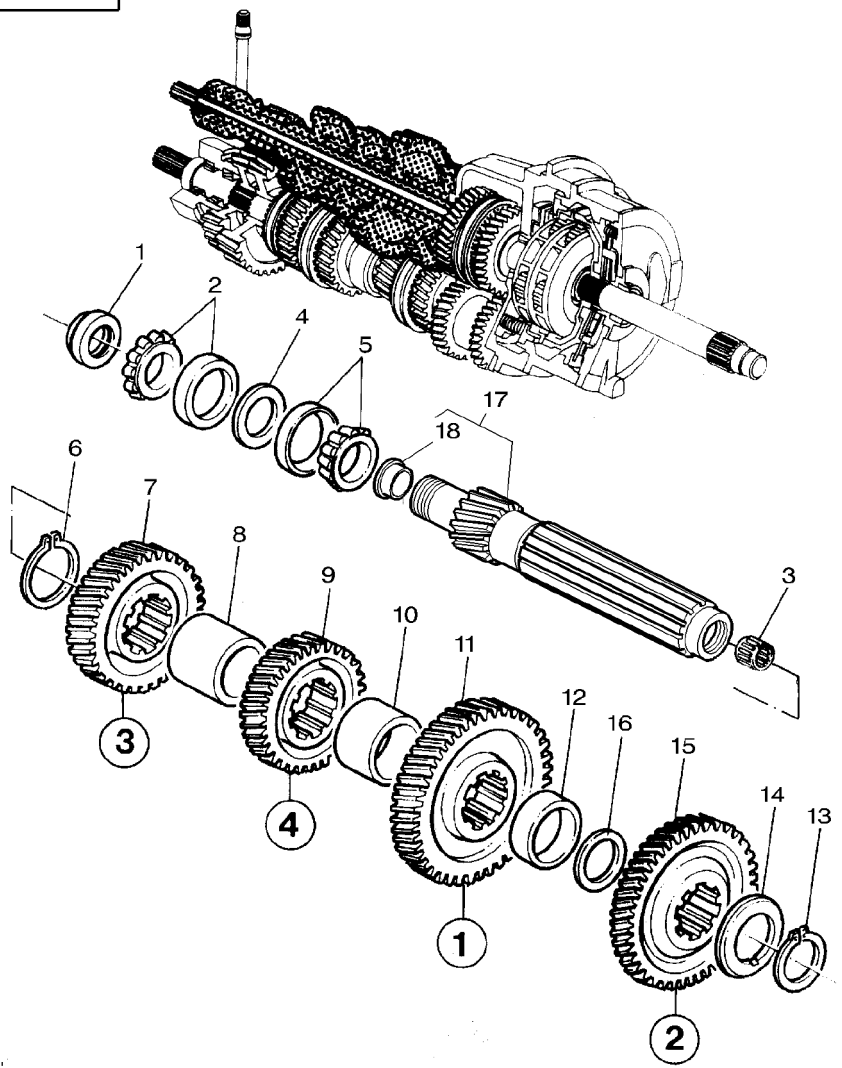

[B] WITH POWER SHUTTLE
AVEC INVERSEUR SOUS COUPLE
MIT UNTER DREHMOMENT
CON SOTTO COPPIA
CON INVERSOR SUB PAR

1-ZF33-001-A

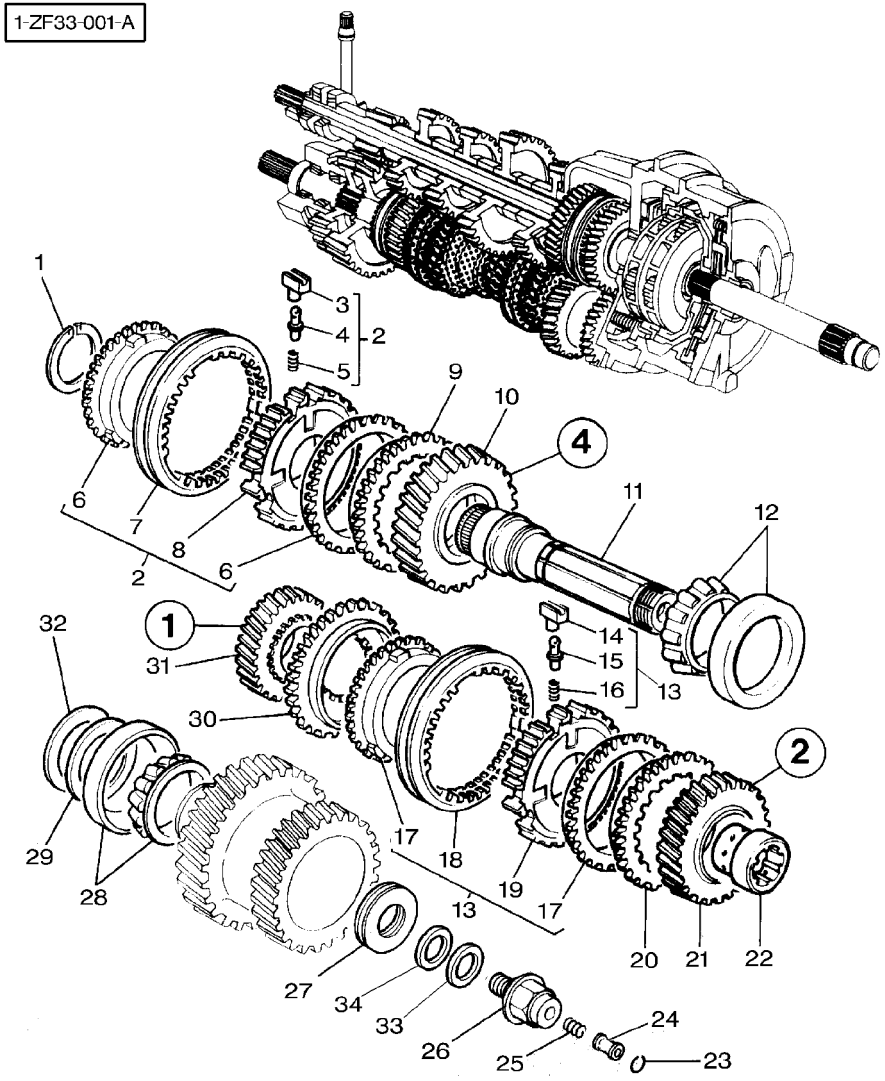

1	1444488X1		**1**	RING	ANNEAU ANELLO	RING ARO
2	**3616410M91**		**1**	SYNCHRO GEAR	SYNCHRO SINCRONIZZATORE	SYNCHRONRING SINCRONIZADOR
3	3618170M1	2	**3**	POPPET	POUSSOIR SUPPORTO VERTIC.	VENTILKEGEL CONTRAPUNTA
4	3386520M1	2	**3**	BALL	BILLE SFERA	KUGEL BOLA
5	3386519M1	2	**3**	SPRING	RESSORT MOLLA	FEDER MUELLE
6	3618168M1	2	**2**	RING	ANNEAU ANELLO	RING ARO
7	3618169M1	2	**1**	SLIDER BEARING	COULISSEAU CUSCINETTO GUIDA	GLEITLAGER COJINETE DESPLAZ
8	3616324M1	2	**1**	HUB	MOYEU MOZZO	NABE CUBO
9	**3617219M1**		**1**	RING	ANNEAU ANELLO	RING ARO
10	3617281M93	35	**1**	PINION	PIGNON PIGNONE	RITZEL PINON
11	3713477M2		**1**	SHAFT	ARBRE ALBERO	WELLE ARBOL
12	968634M91		**1**	BEARING ASSY	ROULEMENT CUSCINETTO COMPL	RADIALLAGER RODAMIENTO RAD
13	**3616592M91**		**1**	SYNCHRO GEAR	SYNCHRO SINCRONIZZATORE	SYNCHRONRING SINCRONIZADOR
14	3618170M1	13	**3**	POPPET	POUSSOIR SUPPORTO VERTIC.	VENTILKEGEL CONTRAPUNTA
15	3386520M1	13	**3**	BALL	BILLE SFERA	KUGEL BOLA
16	3386519M1	13	**3**	SPRING	RESSORT MOLLA	FEDER MUELLE
17	3618168M1	13	**2**	RING	ANNEAU ANELLO	RING ARO
18	3618169M1	13	**1**	SLIDER BEARING	COULISSEAU CUSCINETTO GUIDA	GLEITLAGER COJINETE DESPLAZ
19	3616516M1	13	**1**	HUB	MOYEU MOZZO	NABE CUBO
20	**3617219M1**		**1**	RING	ANNEAU ANELLO	RING ARO
21	3619034M93	24	**1**	PINION	PIGNON PIGNONE	RITZEL PINON
22	3619366M4		**1**	BUSH	BAGUE BOCCOLA	BUCHSE CASQUILLO
23	3382831M1		**1**	SEGMENT	SEGMENT SEGMENTO	SEGMENT SEGMENTO
24	3385884M2		**1**	TUBE	TUBE TUBO	ROHR TUBO
25	3382828M1		**1**	SPRING	RESSORT MOLLA	FEDER MUELLE
26	3713479M3	M20	**1**	SCREW	VIS VITE	SCHRAUBE TORNILLO

1-ZF33-001-A

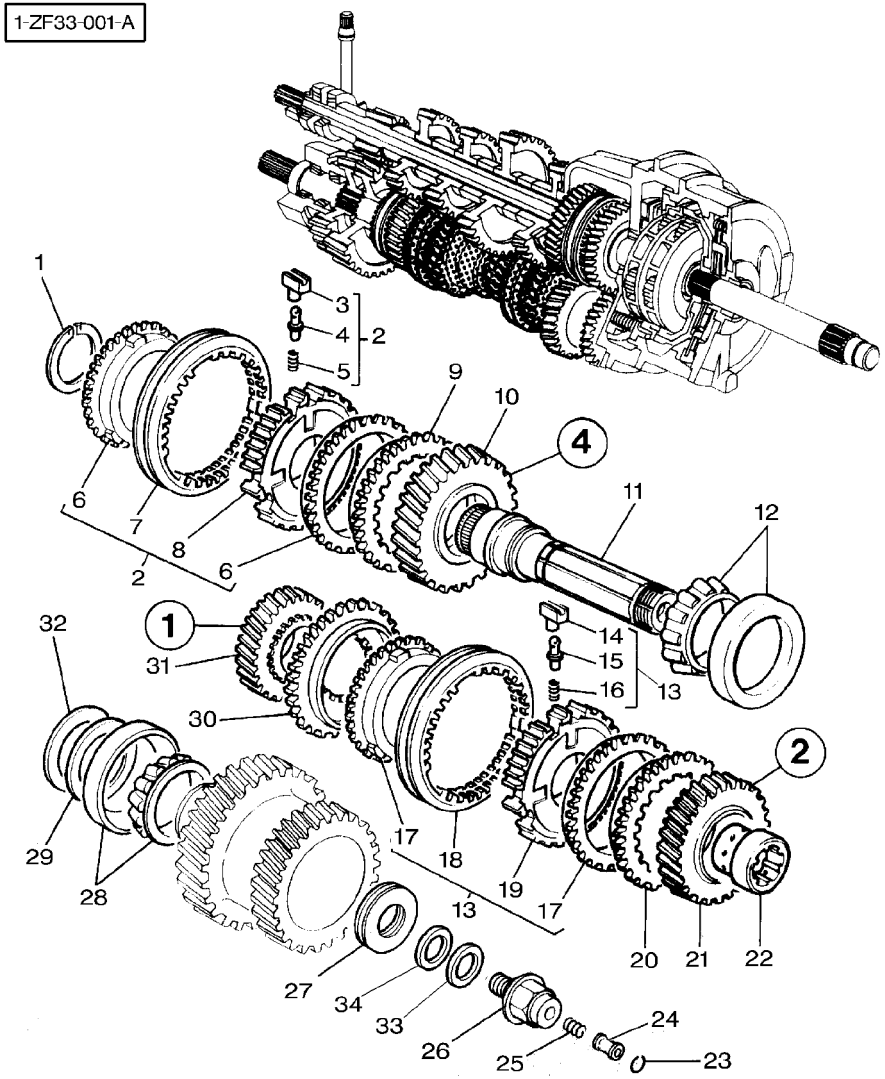

27	3713478M1			3	WASHER	RONDELLE RONDELLA UNTERLEGSCHEIBE ARANDELA
28	3010876X91			1	BEARING ASSY	ROULEMENT CUSCINETTO COMPL RADIALLAGER RODAMIENTO RAD
29	3383171M1	⧗	0,05MM	X	CHOCK	CALE PASSACAVO UNTERLEG-KEIL CALZA
29	3380040M1	⧗	0,10MM	X	SHIM	CALE REGLAGE SPESSORE EINSTELLBLECH CALCE
29	3380041M1	⧗	0,30MM	X	SHIM	CALE REGLAGE SPESSORE EINSTELLBLECH CALCE
29	3380042M1	⧗	0,50MM	X	SHIM	CALE REGLAGE SPESSORE EINSTELLBLECH CALCE
30	**3616827M2**			1	RING	ANNEAU ANELLO RING ARO
31	3714109M1	⛭	17	1	PINION	PIGNON PIGNONE RITZEL PINON
32	3383164M2			1	WASHER	RONDELLE RONDELLA UNTERLEGSCHEIBE ARANDELA
33	3713480M1	⧗	0,25MM	X	CHOCK	CALE PASSACAVO UNTERLEG-KEIL CALZA
33	3713481M1	⧗	0,5MM	X	CHOCK	CALE PASSACAVO UNTERLEG-KEIL CALZA
34	3713483M1			1	WASHER	RONDELLE RONDELLA UNTERLEGSCHEIBE ARANDELA

Heavy Duty Transmission Power Shuttle	**Main Shaft**
Boite De Vitesses Renforcee Inverseur Sous Couple	**Arbre Principal**
Verstaerkt Getriebe Schaltgetriebe Unter Drehmoment	**Hauptwelle**
Trasmissione Rinforzoto Inversore Sotto Coppia	**Albero Principale**
Transmision Servicio Pesado Inversor Sub Par	**Eje Principal**

25-50

1-ZF71-002-A

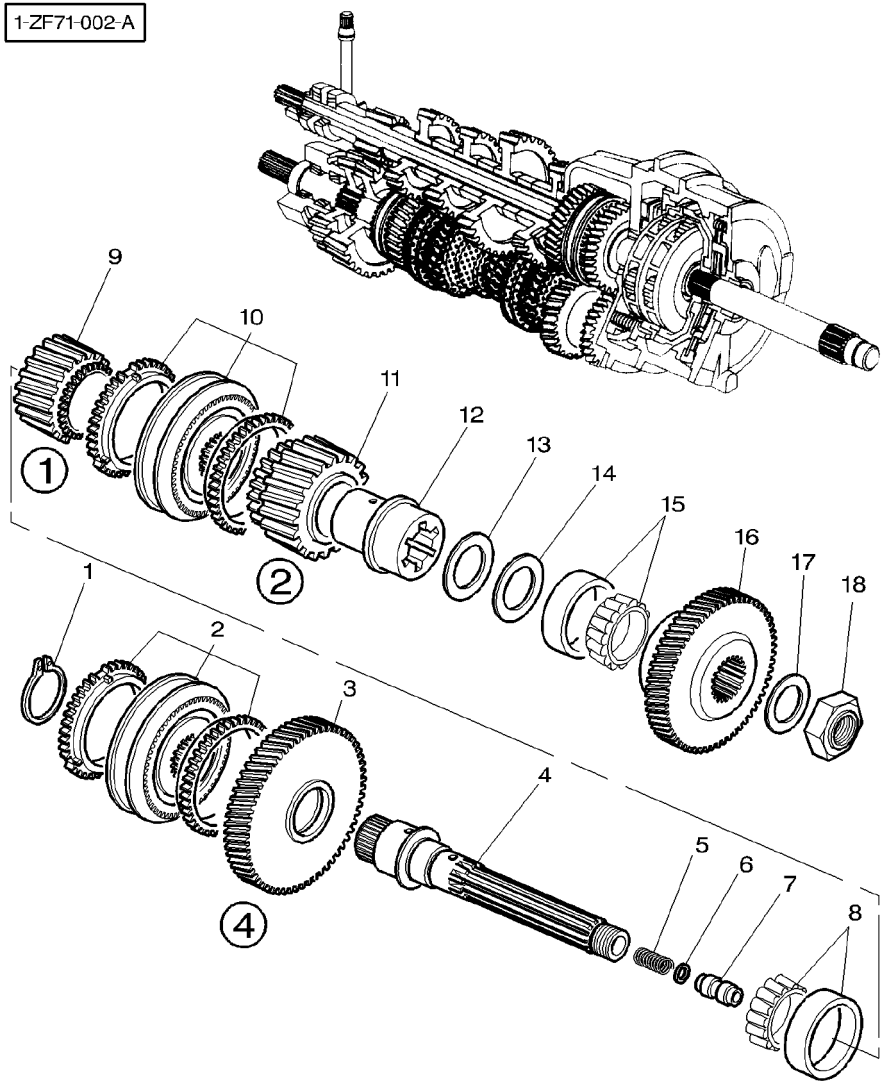

1	1444488X1			1	RING	ANNEAU ANELLO	RING ARO
2	3793700M91	👁	25–55 No 11	1	SYNCHRO GEAR	SYNCHRO SINCRONIZZATORE	SYNCHRONRING SINCRONIZADOR
3	3617281M93		35	1	PINION	PIGNON PIGNONE	RITZEL PINON
4	3793500M1			1	SHAFT	ARBRE ALBERO	WELLE ARBOL
5	3382828M1			1	SPRING	RESSORT MOLLA	FEDER MUELLE
6	3382831M1			1	SEGMENT	SEGMENT SEGMENTO	SEGMENT SEGMENTO
7	3790546M1			1	TUBE	TUBE TUBO	ROHR TUBO
8	968634M91			1	BEARING ASSY	ROULEMENT CUSCINETTO COMPL	RADIALLAGER RODAMIENTO RAD
9	3792383M1		17	1	PINION	PIGNON PIGNONE	RITZEL PINON
10	3793699M91	👁	25–55 No 1	1	SYNCHRO GEAR	SYNCHRO SINCRONIZZATORE	SYNCHRONRING SINCRONIZADOR
11	3619034M93		24	1	PINION	PIGNON PIGNONE	RITZEL PINON
12	3619366M4			1	BUSH	BAGUE BOCCOLA	BUCHSE CASQUILLO
13	3383164M2			1	WASHER	RONDELLE RONDELLA	UNTERLEGSCHEIBE ARANDELA
14	3383171M1	⧗	0,05MM	X	CHOCK	CALE PASSACAVO	UNTERLEG–KEIL CALZA
14	3380040M1	⧗	0,10MM	X	SHIM	CALE REGLAGE SPESSORE	EINSTELLBLECH CALCE
14	3380041M1	⧗	0,30MM	X	SHIM	CALE REGLAGE SPESSORE	EINSTELLBLECH CALCE
14	3380042M1	⧗	0,50MM	X	SHIM	CALE REGLAGE SPESSORE	EINSTELLBLECH CALCE
15	3010876X91			1	BEARING ASSY	ROULEMENT CUSCINETTO COMPL	RADIALLAGER RODAMIENTO RAD
16	3793579M1		29	1	PINION	PIGNON PIGNONE	RITZEL PINON
16	3793580M1		30	1	PINION	PIGNON PIGNONE	RITZEL PINON
17	3792379M1			1	WASHER	RONDELLE RONDELLA	UNTERLEGSCHEIBE ARANDELA
18	3791650M1			1	NUT	ECROU DADO	MUTTER TUERCA

Synchro Heavy Duty Transmission
Synchro Boite De Vitesses Renforcee
Synchronisiereinrichtung Verstaerkt Getriebe
Sincronizzatore Trasmissione Rinforzoto
Sincronizade Transmision Servicio Pesado

25-55

With Power Shuttle
Avec Inverseur Sous Couple
Mit Unter Drehmoment
Con Sotto Coppia
Con Inversor Sub Par

1-ZF57-002-A

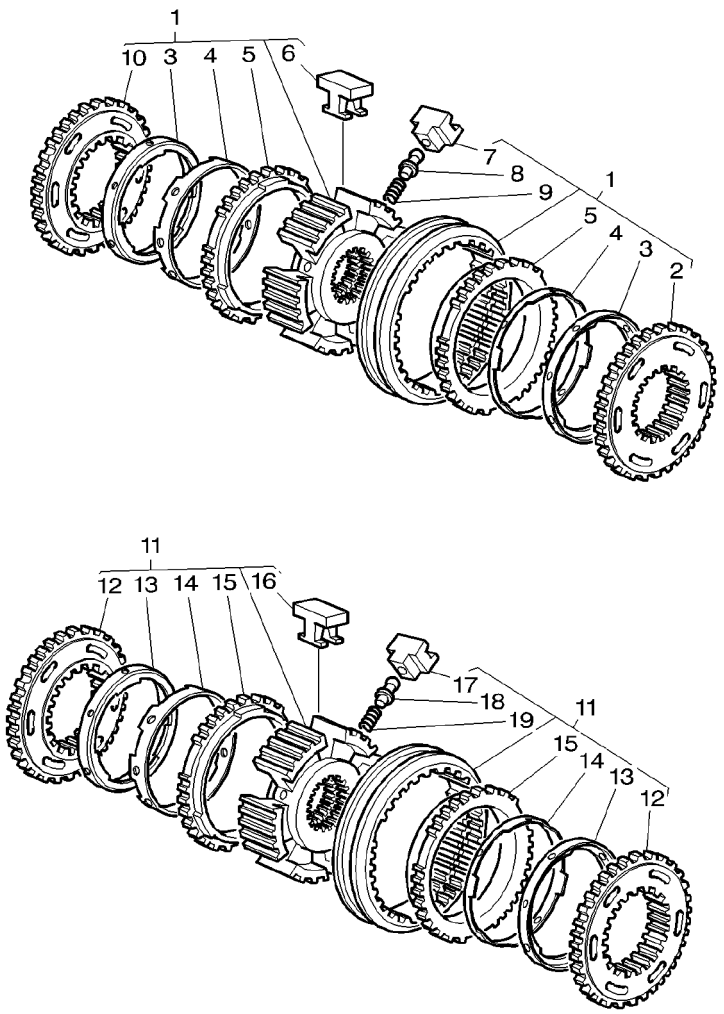

1	3793699M91		**1**	SYNCHRO GEAR	SYNCHRO SINCRONIZZATORE	SYNCHRONRING SINCRONIZADOR
2	3903559M1	1	**1**	CONE	CONE CONO	KONUS CONO
3	3902682M1	1	**2**	CONE	CONE CONO	KONUS CONO
4	3903558M1	1	**2**	BUSH	BAGUE BOCCOLA	BUCHSE CASQUILLO
5	**3900986M1**	1	**2**	RING	ANNEAU ANELLO	RING ARO
6	3900979M1	1	**3**	SKATE	PATIN PATTINO	SCHLITTEN-KUFE PATIN
7	3771355M1	1	**3**	POPPET	POUSSOIR SUPPORTO VERTIC.	VENTILKEGEL CONTRAPUNTA
8	3771353M1	1	**3**	PIN	GOUPILLE PERNO	BOLZEN PASADOR
9	3771354M1	1	**3**	SPRING	RESSORT MOLLA	FEDER MUELLE
10	3900982M2	1	**1**	CONE	CONE CONO	KONUS CONO
11	3793700M91		**1**	SYNCHRO GEAR	SYNCHRO SINCRONIZZATORE	SYNCHRONRING SINCRONIZADOR
12	3900982M2	11	**2**	CONE	CONE CONO	KONUS CONO
13	3902682M1	11	**2**	CONE	CONE CONO	KONUS CONO
14	3903558M1	11	**2**	BUSH	BAGUE BOCCOLA	BUCHSE CASQUILLO
15	**3900986M1**	11	**2**	RING	ANNEAU ANELLO	RING ARO
16	3900979M1	11	**3**	SKATE	PATIN PATTINO	SCHLITTEN-KUFE PATIN
17	3771355M1	11	**3**	POPPET	POUSSOIR SUPPORTO VERTIC.	VENTILKEGEL CONTRAPUNTA
18	3771353M1	11	**3**	PIN	GOUPILLE PERNO	BOLZEN PASADOR
19	3771354M1	11	**3**	SPRING	RESSORT MOLLA	FEDER MUELLE

1-ZF34-001-B

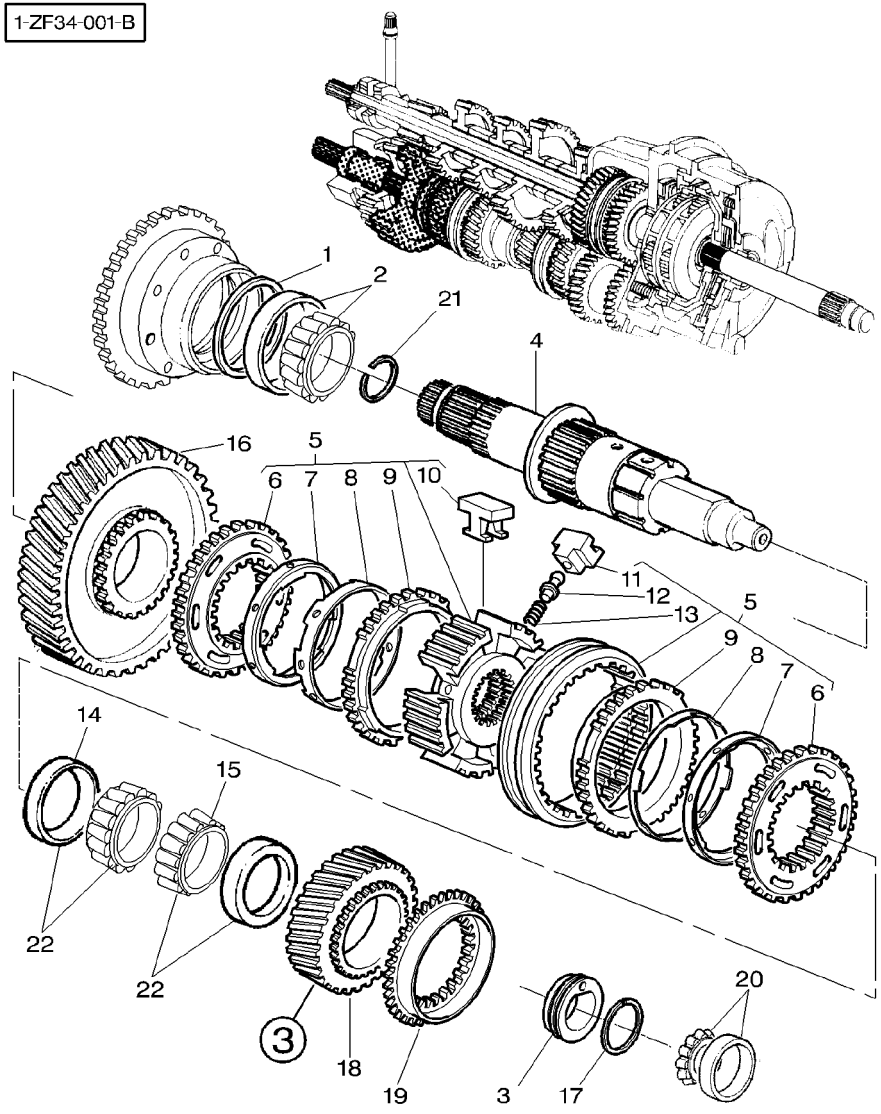

1	3716281M1	⧗	0,05 MM	X	SHIM	CALE REGLAGE SPESSORE	EINSTELLBLECH CALCE
1	3716282M1	⧗	0,1 MM	X	SHIM	CALE REGLAGE SPESSORE	EINSTELLBLECH CALCE
1	3716283M1	⧗	0,3 MM	X	SHIM	CALE REGLAGE SPESSORE	EINSTELLBLECH CALCE
1	3716284M1	⧗	0,4 MM	X	SHIM	CALE REGLAGE SPESSORE	EINSTELLBLECH CALCE
1	3716285M1	⧗	0,5 MM	X	SHIM	CALE REGLAGE SPESSORE	EINSTELLBLECH CALCE
1	3716286M1	⧗	1 MM	X	SHIM	CALE REGLAGE SPESSORE	EINSTELLBLECH CALCE
1	3790885M1	⧗	1,5 MM	X	SHIM	CALE REGLAGE SPESSORE	EINSTELLBLECH CALCE
2	3010691X91			1	BEARING ASSY	ROULEMENT CUSCINETTO COMPL	RADIALLAGER RODAMIENTO RAD
3	3790808M3			1	WASHER	RONDELLE RONDELLA	UNTERLEGSCHEIBE ARANDELA
4	3716237M3			1	SHAFT	ARBRE ALBERO	WELLE ARBOL
5	3712847M94			1	SYNCHRO GEAR	SYNCHRO SINCRONIZZATORE	SYNCHRONRING SINCRONIZADOR
6	3900982M2	5		2	CONE	CONE CONO	KONUS CONO
7	3902682M1	5		2	CONE	CONE CONO	KONUS CONO
8	3902633M1	5		2	BUSH	BAGUE BOCCOLA	BUCHSE CASQUILLO
9	**3900986M1**	5		2	RING	ANNEAU ANELLO	RING ARO
10	3900979M1	5		3	SKATE	PATIN PATTINO	SCHLITTEN-KUFE PATIN
11	3771355M1	5		3	POPPET	POUSSOIR SUPPORTO VERTIC.	VENTILKEGEL CONTRAPUNTA
12	3771353M1	5		3	PIN	GOUPILLE PERNO	BOLZEN PASADOR
13	3771354M1	5		3	SPRING	RESSORT MOLLA	FEDER MUELLE
14	3010059X1	➡	H173026	1	RACE	CUVETTE CORSA	LAGERRING PISTA COJINETE
15	3010060X1	➡	H173026	1	CONE	CONE CONO	KONUS CONO
16	3619347M92		48	1	PINION	PIGNON PIGNONE	RITZEL PINON
17	3617884M1			1	SEGMENT	SEGMENT SEGMENTO	SEGMENT SEGMENTO
18	3618933M5		30	1	PINION	PIGNON PIGNONE	RITZEL PINON
19	**3617219M1**			1	RING	ANNEAU ANELLO	RING ARO
20	**3010118X91**			1	BEARING TAPER	ROULEMNT CONIQUE CUSCINETTO CONIC	KEGELLAGER RODAMIENTO CONI

1-ZF34-001-B

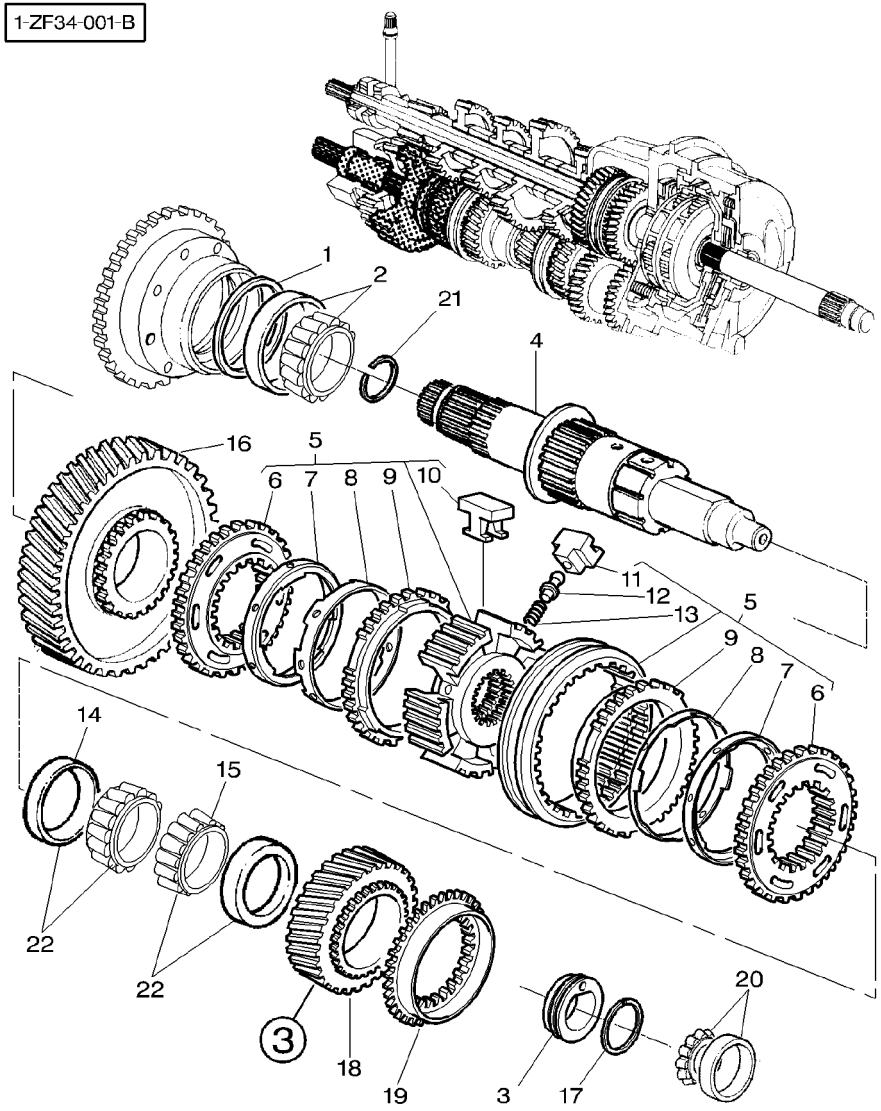

21	3010640X1	[A]	**1**	RING	ANNEAU ANELLO	RING ARO
22	3010901X91	➡ H173027	**2**	BEARING ASSY	ROULEMENT CUSCINETTO COMPL	RADIALLAGER RODAMIENTO RAD

[A] WITH CREEPER GEAR
AVEC REDUCTEUR DE VITESSE RAMPANTE
MIT KRIECHGANGUEBERSETZUNG
CON RIDUTTORE PER LENTA VELOCITA
CON REDUCTORE DE VELOCIDADE LENTA

1-ZF70-004-B

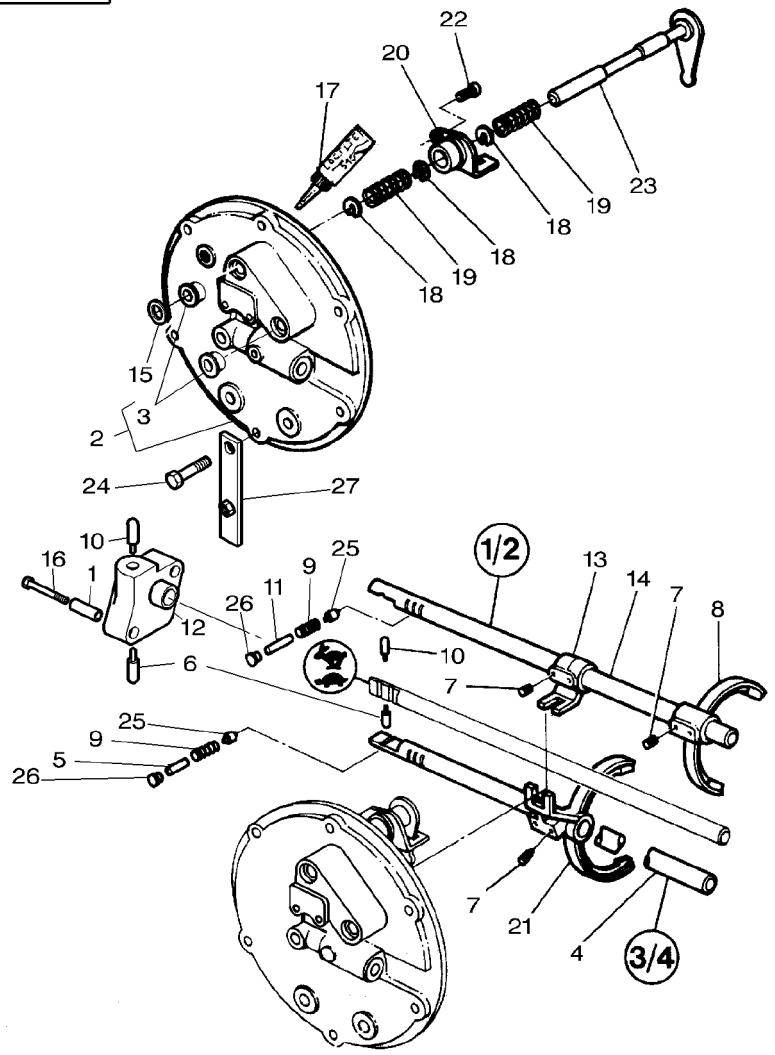

1	3716287M2		**2**	PIN	GOUPILLE PERNO	BOLZEN PASADOR
2	3715771M14		**1**	COVER	COUVERCLE COPERCHIO	DECKEL CUBIERTA
2	3793708M91	[C]	**1**	COVER	COUVERCLE COPERCHIO	DECKEL CUBIERTA
3	3715785M2	2	**2**	BUSH	BAGUE BOCCOLA	BUCHSE CASQUILLO
3	3715785M2	2 [C]	**1**	BUSH	BAGUE BOCCOLA	BUCHSE CASQUILLO
3	3007458X1	2 [C]	**1**	PLUG	BOUCHON TAPPO	VERSCHL.STOPFEN TAPON
4	3385621M2		**1**	STEM	TIGE STELO	STIEL VASTAGO
5	1611669M1		**1**	SPACER	ENTRETOISE DISTANZIALE	ABSTANDSTUECK PIEZA DISTANCIA
6	1610891M1		**1**	LATCH	VERROU SALISCENDI	RIEGEL CERROJO
7	3386683M1		**6**	SCREW SPECIAL	VIS SPECIALE VITE SPECIALE	SPEZIALSCHRAUBE TORNILLO ESPEC.
8	3045560M3		**1**	FORK	FOURCHETTE FORCA	GABEL HORQUILLA
9	191221M1		**2**	SPRING	RESSORT MOLLA	FEDER MUELLE
10	1610890M1		**1**	LATCH	VERROU SALISCENDI	RIEGEL CERROJO
11	1611670M1		**1**	SPACER	ENTRETOISE DISTANZIALE	ABSTANDSTUECK PIEZA DISTANCIA
12	3716239M2	[A]	**1**	SUPPORT	SUPPORT SUPPORTO	LAGERUNG DISPOS.DE SOSTEN
13	3385643M1		**1**	SELECTOR	SELECTEUR SELETTORE	SELEKTOR SELECTOR
14	3385644M1		**1**	STEM	TIGE STELO	STIEL VASTAGO
15	3790170M1		**1**	SEAL	JOINT ETANCHEITE PARAOLIO	DICHTRING RETEN
16	3008596X1	[A] M6x60	**2**	BOLT	BOULON BULLONE	MASCH.SCHRAUBE PERNO
17	1633270M3		**1**	LOCTITE	LOCTITE LOCTITE	LOCTITE LOCTITE
18	3386414M1		**3**	SPRING POT	SIEGE RESSORT CROGIUOLO	FEDERTOPF ASIENTO DE MUELL
19	3386416M1		**2**	SPRING	RESSORT MOLLA	FEDER MUELLE
20	3386412M2		**1**	FORK	FOURCHETTE FORCA	GABEL HORQUILLA
21	3385620M3		**1**	FORK	FOURCHETTE FORCA	GABEL HORQUILLA
22	339337X1	M8X30	**1**	SCREW METRIC	VIS METRIQUE VITE METRICA	SCHRAUBE METR TORNILLO METRICO
23	**3386413M1**	➡	J021015	**1**	STEM	TIGE STELO	STIEL VASTAGO

1-ZF70-004-B

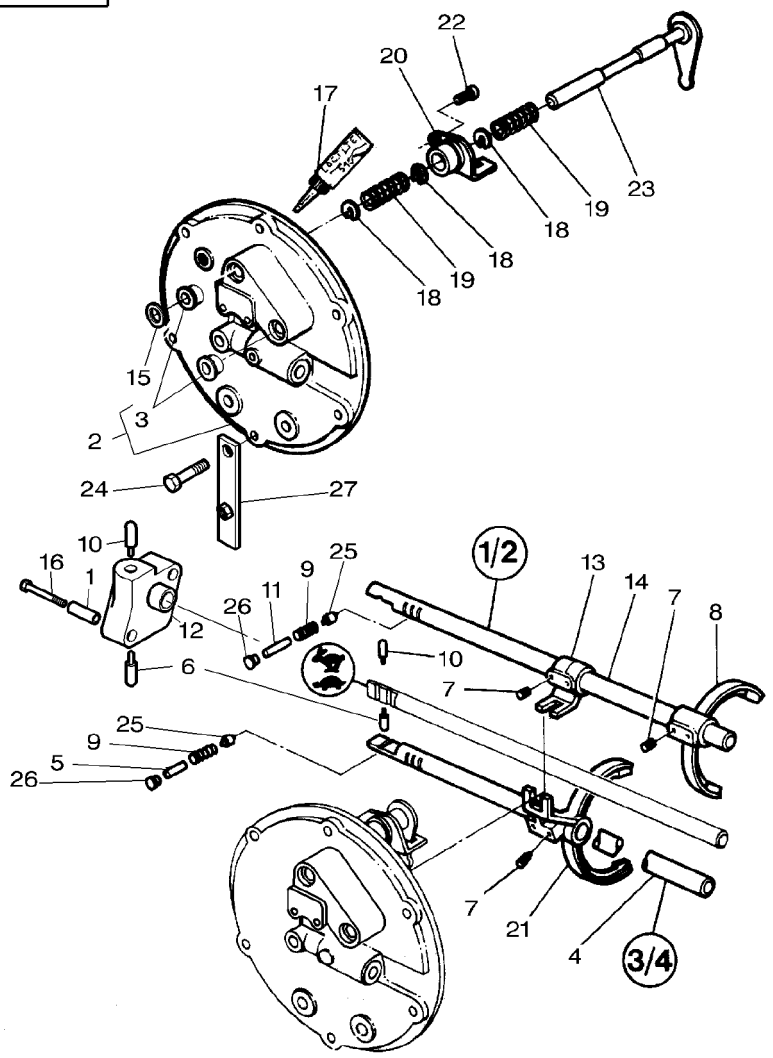

23	3793559M1	➡ J021016	**1**	SELECTOR	SELECTEUR SELETTORE	SELEKTOR SELECTOR
24	354262X1	∅ 3/8"UNC ◀▶ 38 MM	**5**	BOLT UNC	BOULON UNC BULLONE UNC	MASCH.SCHRB.UNC PERNO UNC
24	354264X1	∅ 3/8"UNC ◀▶ 44MM	**1**	BOLT UNC	BOULON UNC BULLONE UNC	MASCH.SCHRB.UNC PERNO UNC
25	3322463M2		**2**	JOURNAL	TENON ZONA APPOGGIO	LAGERZAPFEN GORRON
26	1441772X1		**2**	PLUG	BOUCHON TAPPO	VERSCHL.STOPFEN TAPON
27	3793694M1	➡ 10/99	**1**	STRAP	PATTE CORREGGIA	LASCHE FAJA

[A] WITH CREEPER GEAR
AVEC REDUCTEUR DE VITESSE RAMPANTE
MIT KRIECHGANGUEBERSETZUNG
CON RIDUTTORE PER LENTA VELOCITA
CON REDUCTORE DE VELOCIDADE LENTA

[C] WITH POWER SHUTTLE
AVEC INVERSEUR SOUS COUPLE
MIT UNTER DREHMOMENT
CON SOTTO COPPIA
CON INVERSOR SUB PAR

Dynashift Transmission
Boite De Vitesses Dynashift
Dynashift Getriebe
Trasmissione Dynashift
Transmision Dynashift

25-70

With Platform
Avec Plateforme
Mit Plattform
Con Plattaforma
Con Plataforma

1-ZF70-003-A

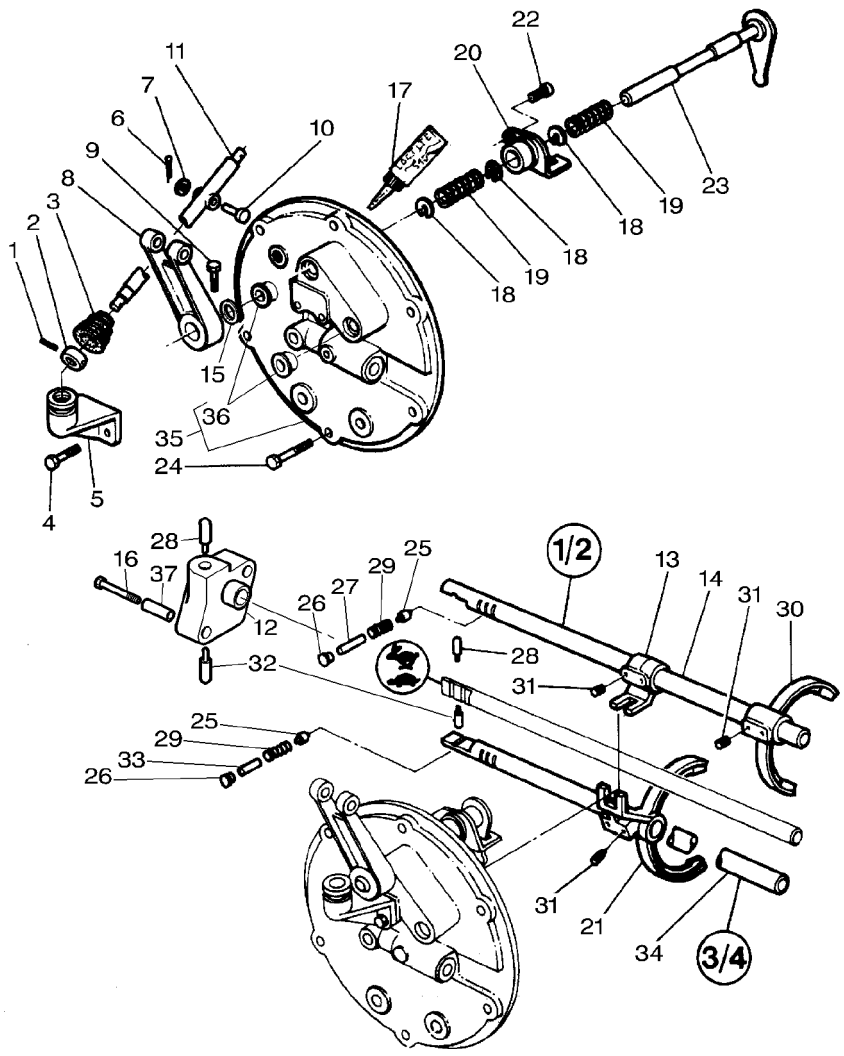

1	1440389X1		1	PIN	GOUPILLE PERNO	BOLZEN PASADOR
2	3383533M1		1	TOGGLE	ROTULE ROTULA	GELENKZAPFEN PERNO ENGANCHE
3	3385863M1		1	BELLOWS	SOUFFLET SOFFIETTO	FALTENBALG FUELLE
4	339123X1	M8X20	2	SCREW METRIC	VIS METRIQUE VITE METRICA	SCHRAUBE METR TORNILLO METRICO
5	3383526M1		1	SUPPORT	SUPPORT SUPPORTO	LAGERUNG DISPOS.DE SOSTEN
6	354066X1		1	PIN	GOUPILLE PERNO	BOLZEN PASADOR
7	390735X1		1	WASHER	RONDELLE RONDELLA	UNTERLEGSCHEIBE ARANDELA
8	3385791M1		1	CONROD	BIELLE BIELLA	PLEUEL BIELA
9	3771408M1		1	SCREW	VIS VITE	SCHRAUBE TORNILLO
10	3383531M1		1	CLEVIS PIN	AXE PERNO D'ATTACCO	SPLINTBOLZEN BULON CILINDRICO
11	3385793M1	◀▶ 217 MM	1	LEVER	LEVIER LEVA	HEBEL PALANCA
12	3716239M2	[A]	1	SUPPORT	SUPPORT SUPPORTO	LAGERUNG DISPOS.DE SOSTEN
13	3385643M1		1	SELECTOR	SELECTEUR SELETTORE	SELEKTOR SELECTOR
14	3385644M1		1	STEM	TIGE STELO	STIEL VASTAGO
15	3790170M1		1	SEAL	JOINT ETANCHEITE PARAOLIO	DICHTRING RETEN
16	3008596X1	[A] M6x60	2	BOLT	BOULON BULLONE	MASCH.SCHRAUBE PERNO
17	1633270M3		1	LOCTITE	LOCTITE LOCTITE	LOCTITE LOCTITE
18	3386414M1		3	SPRING POT	SIEGE RESSORT CROGIUOLO	FEDERTOPF ASIENTO DE MUELL
19	3386416M1		2	SPRING	RESSORT MOLLA	FEDER MUELLE
20	3386412M2		1	FORK	FOURCHETTE FORCA	GABEL HORQUILLA
21	3385620M3		1	FORK	FOURCHETTE FORCA	GABEL HORQUILLA
22	339337X1	M8X30	1	SCREW METRIC	VIS METRIQUE VITE METRICA	SCHRAUBE METR TORNILLO METRICO
23	**3386413M1**	▶| J021015	1	STEM	TIGE STELO	STIEL VASTAGO
23	3793559M1	▶ J021016	1	SELECTOR	SELECTEUR SELETTORE	SELEKTOR SELECTOR
24	354262X1	∅ 3/8"UNC ◀▶ 38 MM	5	BOLT UNC	BOULON UNC BULLONE UNC	MASCH.SCHRB.UNC PERNO UNC
25	3322463M2		2	JOURNAL	TENON ZONA APPOGGIO	LAGERZAPFEN GORRON

Dynashift Transmission
Boite De Vitesses Dynashift
Dynashift Getriebe
Trasmissione Dynashift
Transmision Dynashift

25-70

With Platform
Avec Plateforme
Mit Plattform
Con Plattaforma
Con Plataforma

1-ZF70-003-A

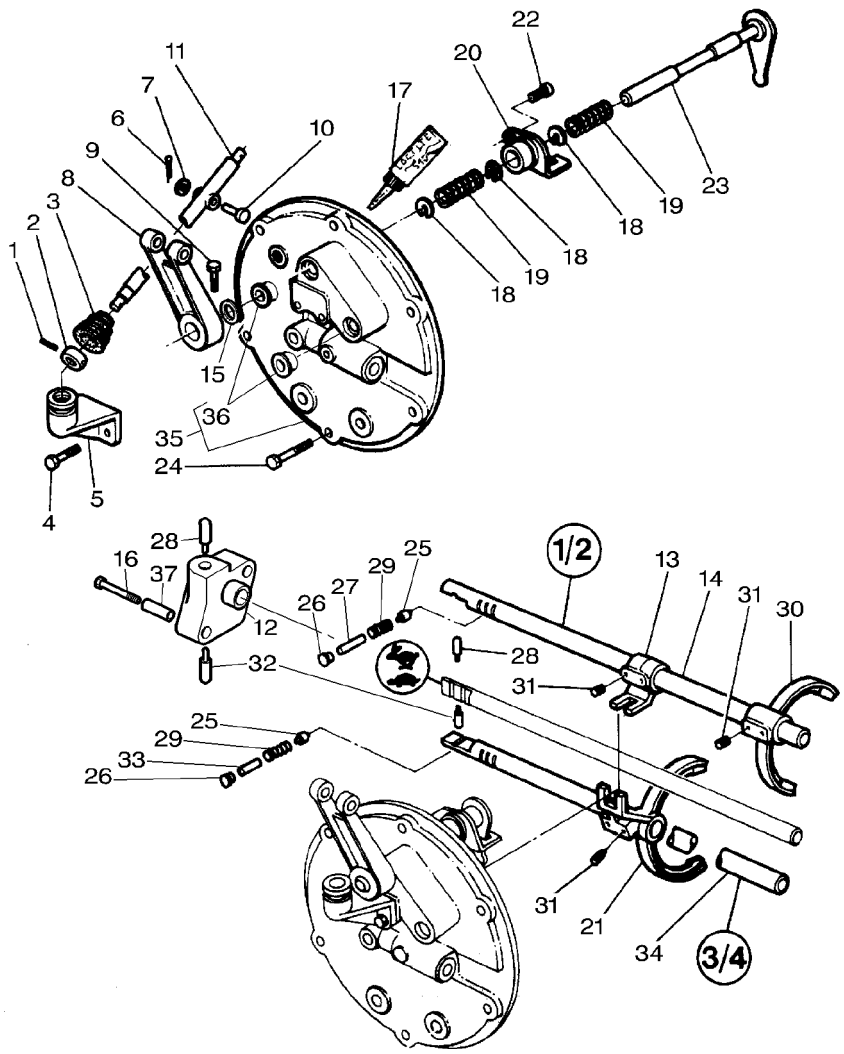

26	1441772X1		**2**	PLUG	BOUCHON TAPPO	VERSCHL.STOPFEN TAPON
27	1611670M1		**1**	SPACER	ENTRETOISE DISTANZIALE	ABSTANDSTUECK PIEZA DISTANCIA
28	1610890M1		**1**	LATCH	VERROU SALISCENDI	RIEGEL CERROJO
29	191221M1		**2**	SPRING	RESSORT MOLLA	FEDER MUELLE
30	3045560M3		**1**	FORK	FOURCHETTE FORCA	GABEL HORQUILLA
31	3386683M1		**6**	SCREW SPECIAL	VIS SPECIALE VITE SPECIALE	SPEZIALSCHRAUBE TORNILLO ESPEC.
32	1610891M1		**1**	LATCH	VERROU SALISCENDI	RIEGEL CERROJO
33	1611669M1		**1**	SPACER	ENTRETOISE DISTANZIALE	ABSTANDSTUECK PIEZA DISTANCIA
34	3385621M2		**1**	STEM	TIGE STELO	STIEL VASTAGO
35	3715771M14		**1**	COVER	COUVERCLE COPERCHIO	DECKEL CUBIERTA
36	3715785M2	35	**2**	BUSH	BAGUE BOCCOLA	BUCHSE CASQUILLO
37	3716287M2		**2**	PIN	GOUPILLE PERNO	BOLZEN PASADOR

[A] WITH CREEPER GEAR
AVEC REDUCTEUR DE VITESSE RAMPANTE
MIT KRIECHGANGUEBERSETZUNG
CON RIDUTTORE PER LENTA VELOCITA
CON REDUCTORE DE VELOCIDADE LENTA

1-ZF70-002-B

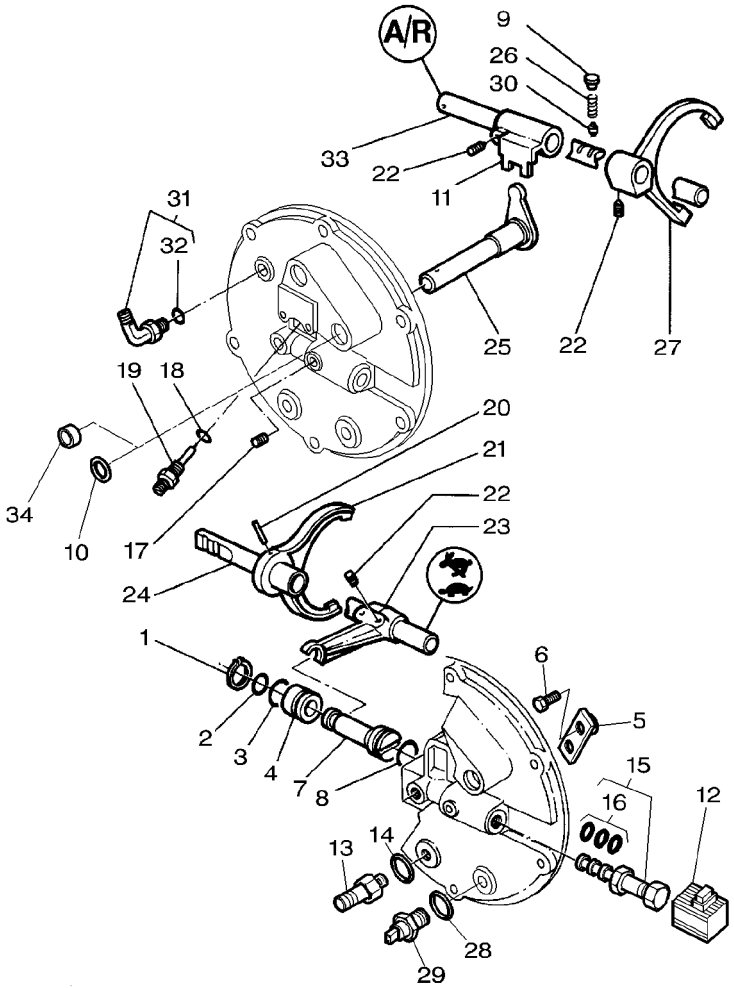

1	390933X1		**1**	CIRCLIP	SEGMENT D ARRET ANELLO D'ARRESTO	SICHERUNGSRING CIRCULITO
2	1006335M1		**1**	O RING	JOINT TORIQUE ANELLO OR	O-RING JUNTA TORICA
3	195876M1		**1**	O RING	JOINT TORIQUE ANELLO OR	O-RING JUNTA TORICA
4	3618872M1		**1**	BUSH	BAGUE BOCCOLA	BUCHSE CASQUILLO
5	3583301M91		**1**	STRAP	PATTE CORREGGIA	LASCHE FAJA
6	391074X1	M6x12	**1**	SCREW METRIC	VIS METRIQUE VITE METRICA	SCHRAUBE METR TORNILLO METRICO
7	3618871M1		**1**	PISTON	PISTON PISTONE	KOLBEN PISTON
8	1001465M1		**1**	RING	ANNEAU ANELLO	RING ARO
9	1441772X1		**1**	PLUG	BOUCHON TAPPO	VERSCHL.STOPFEN TAPON
10	3790170M1	[B]	**1**	SEAL	JOINT ETANCHEITE PARAOLIO	DICHTRING RETEN
11	3385622M2		**1**	SELECTOR	SELECTEUR SELETTORE	SELEKTOR SELECTOR
12	***3619763M1***		**1**	SOLENOID	SOLENOIDE SOLENOIDE	MAGNETSPULE SOLENOIDE
13	3010799X1		**1**	UNION	RACCORD RACCORDO	VERSCHRAUBUNG RACOR
14	3019396X1		**1**	O RING	JOINT TORIQUE ANELLO OR	O-RING JUNTA TORICA
15	***3619762M1***		**1**	SPOOL	TIROIR ROCCHETTO	STEUERSCHIEBER CARRETE
16	3900994M91	15	**1**	KIT, JOINT	JEU JOINTS KIT GIUNTO	DICHTUNGSSATZ JUEGO JUNTAS
17	356039X1	⇒ 365332X1	**1**	PLUG	BOUCHON TAPPO	VERSCHL.STOPFEN TAPON
18	3010890X1		**1**	BUSH	BAGUE BOCCOLA	BUCHSE CASQUILLO
19	***3792196M1***		**1**	SWITCH,INDIRECT	CONTACTEUR INTERRUTTORE IND	KONTAKTSCHALTER CONTACTOR
20	390950X1	5x70	**1**	PIN	GOUPILLE PERNO	BOLZEN PASADOR
21	**3712862M1**		**1**	FORK	FOURCHETTE FORCA	GABEL HORQUILLA
22	3386683M1		**4**	SCREW SPECIAL	VIS SPECIALE VITE SPECIALE	SPEZIALSCHRAUBE TORNILLO ESPEC.
23	3618865M1		**1**	SELECTOR	SELECTEUR SELETTORE	SELEKTOR SELECTOR
24	3714935M1		**1**	STEM	TIGE STELO	STIEL VASTAGO
25	3385769M2	[B]	**1**	STEM	TIGE STELO	STIEL VASTAGO
26	191221M1		**1**	SPRING	RESSORT MOLLA	FEDER MUELLE

1-ZF70-002-B

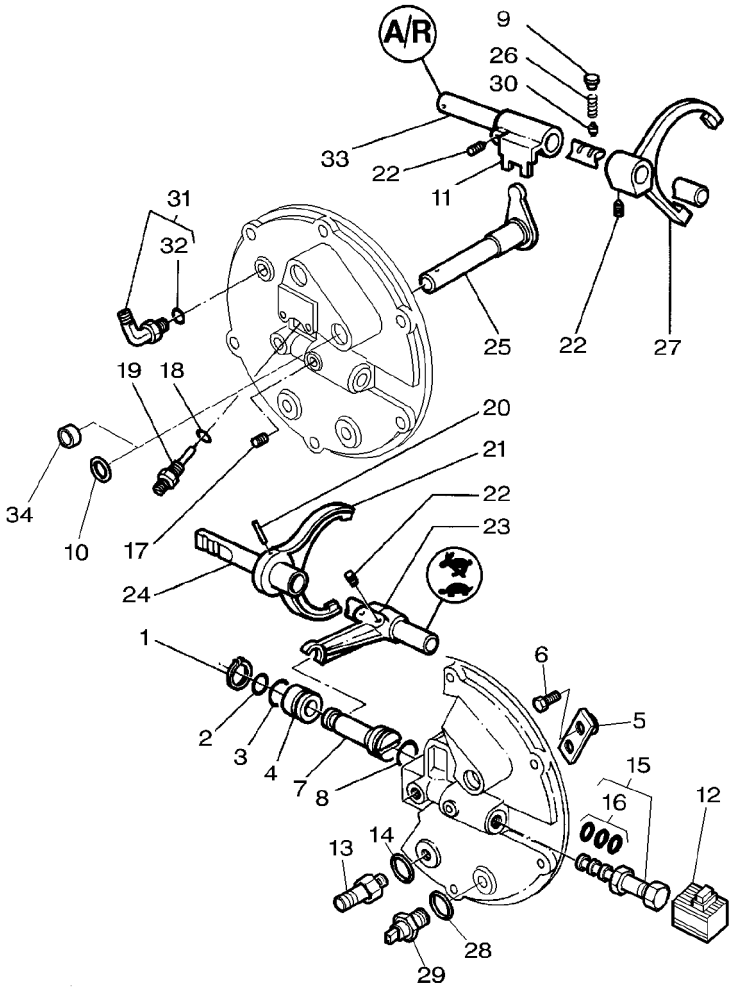

27	3714925M1		
28	3010890X1		
29	***3618249M1***		
30	3322463M2		
31	3019418X91	M22X1,5	
32	3019398X1	31	
33	3792496M1		
34	3007458X1	[A]	

[A] WITH POWER SHUTTLE
AVEC INVERSEUR SOUS COUPLE
MIT UNTER DREHMOMENT
CON SOTTO COPPIA
CON INVERSOR SUB PAR

[B] WITHOUT POWER SHUTTLE
SANS INVERSEUR SOUS COUPLE
OHNE UNTER DREHMOMENT
SENZA SOTTO COPPIA
SIN INVERSOR SUB PAR

1	FORK	FOURCHETTE FORCA	GABEL HORQUILLA
1	BUSH	BAGUE BOCCOLA	BUCHSE CASQUILLO
1	INDUCTIVE TAKER	CAPTEUR INDUCTIF SENSORE INDUTTIV	SENSOR GESCHWIN. CAPTADOR INDUCT.
1	JOURNAL	TENON ZONA APPOGGIO	LAGERZAPFEN GORRON
1	UNION	RACCORD RACCORDO	VERSCHRAUBUNG RACOR
1	O RING	JOINT TORIQUE ANELLO OR	O-RING JUNTA TORICA
1	STEM	TIGE STELO	STIEL VASTAGO
1	PLUG	BOUCHON TAPPO	VERSCHL.STOPFEN TAPON

Dynashift Transmission
Boite De Vitesses Dynashift
Dynashift Getriebe
Trasmissione Dynashift
Transmision Dynashift

25-80

With Platform
Avec Plateforme
Mit Plattform
Con Plattaforma
Con Plataforma

1-ZF70-001-A

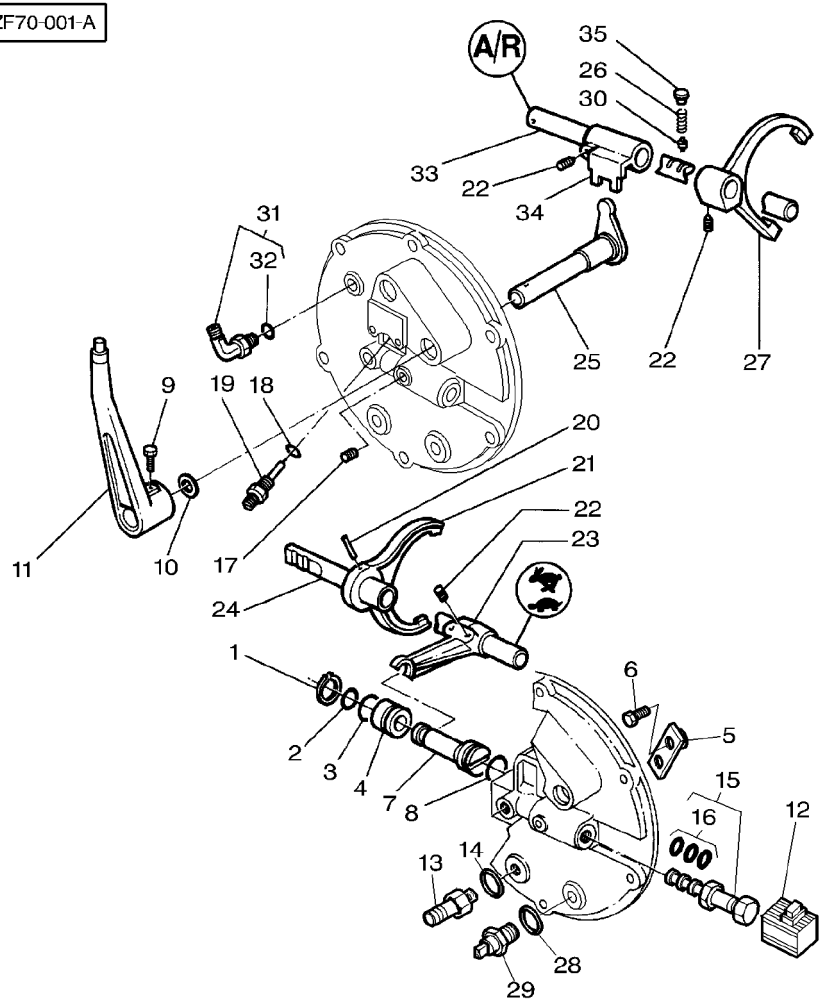

1	390933X1		1	CIRCLIP	SEGMENT D ARRET ANELLO D'ARRESTO	SICHERUNGSRING CIRCULITO
2	1006335M1		1	O RING	JOINT TORIQUE ANELLO OR	O-RING JUNTA TORICA
3	195876M1		1	O RING	JOINT TORIQUE ANELLO OR	O-RING JUNTA TORICA
4	3618872M1		1	BUSH	BAGUE BOCCOLA	BUCHSE CASQUILLO
5	3583301M91		1	STRAP	PATTE CORREGGIA	LASCHE FAJA
6	391074X1	M6x12	1	SCREW METRIC	VIS METRIQUE VITE METRICA	SCHRAUBE METR TORNILLO METRICO
7	3618871M1		1	PISTON	PISTON PISTONE	KOLBEN PISTON
8	1001465M1		1	RING	ANNEAU ANELLO	RING ARO
9	3771408M1		1	SCREW	VIS VITE	SCHRAUBE TORNILLO
10	3790170M1		1	SEAL	JOINT ETANCHEITE PARAOLIO	DICHTRING RETEN
11	3714145M1	◄► 246MM	1	LEVER	LEVIER LEVA	HEBEL PALANCA
12	***3619763M1***		1	SOLENOID	SOLENOIDE SOLENOIDE	MAGNETSPULE SOLENOIDE
13	3010799X1		1	UNION	RACCORD RACCORDO	VERSCHRAUBUNG RACOR
14	3019396X1		1	O RING	JOINT TORIQUE ANELLO OR	O-RING JUNTA TORICA
15	***3619762M1***		1	SPOOL	TIROIR ROCCHETTO	STEUERSCHIEBER CARRETE
16	3900994M91	15	1	KIT, JOINT	JEU JOINTS KIT GIUNTO	DICHTUNGSSATZ JUEGO JUNTAS
17	356039X1	⇒ 365332X1	1	PLUG	BOUCHON TAPPO	VERSCHL.STOPFEN TAPON
18	3010890X1		1	BUSH	BAGUE BOCCOLA	BUCHSE CASQUILLO
19	***3792196M1***		1	SWITCH,INDIRECT	CONTACTEUR INTERRUTTORE IND	KONTAKTSCHALTER CONTACTOR
20	390950X1	5x70	1	PIN	GOUPILLE PERNO	BOLZEN PASADOR
21	**3712862M1**		1	FORK	FOURCHETTE FORCA	GABEL HORQUILLA
22	3386683M1		4	SCREW SPECIAL	VIS SPECIALE VITE SPECIALE	SPEZIALSCHRAUBE TORNILLO ESPEC.
23	3618865M1		1	SELECTOR	SELECTEUR SELETTORE	SELEKTOR SELECTOR
24	3714935M1		1	STEM	TIGE STELO	STIEL VASTAGO
25	3385769M2		1	STEM	TIGE STELO	STIEL VASTAGO
26	191221M1		1	SPRING	RESSORT MOLLA	FEDER MUELLE

Dynashift Transmission
Boite De Vitesses Dynashift
Dynashift Getriebe
Trasmissione Dynashift
Transmision Dynashift

25-80

With Platform
Avec Plateforme
Mit Plattform
Con Plattaforma
Con Plataforma

1-ZF70-001-A

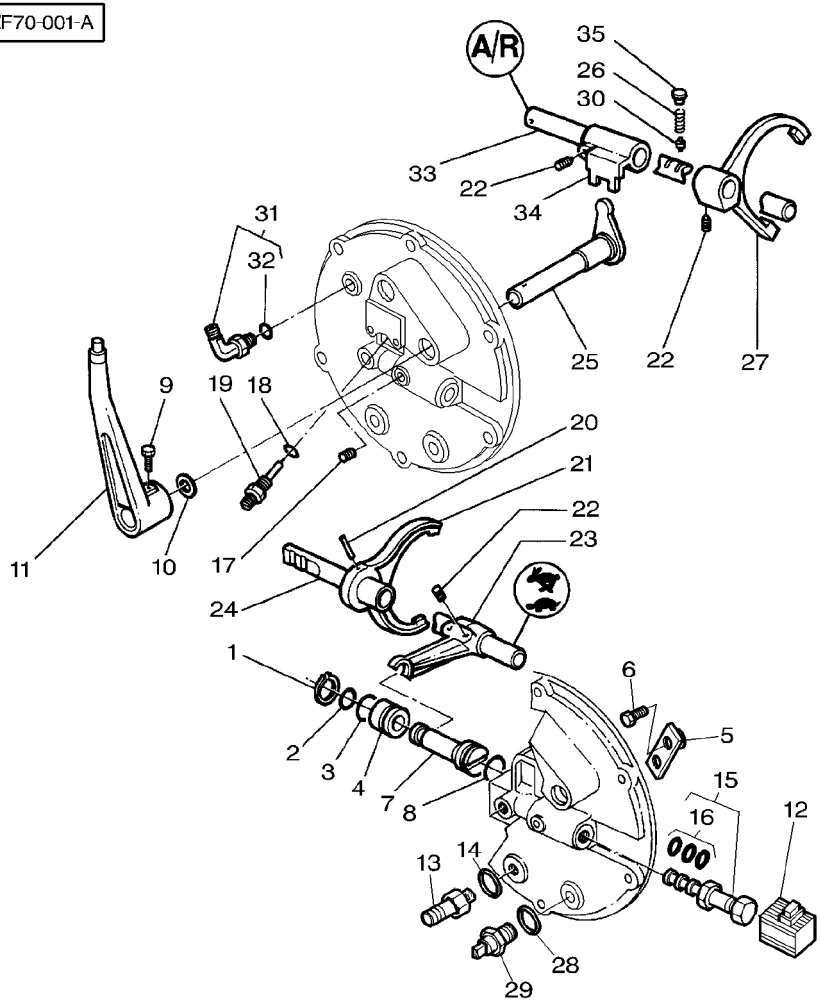

27	3714925M1		**1**	FORK	FOURCHETTE FORCA	GABEL HORQUILLA
28	3010890X1		**1**	BUSH	BAGUE BOCCOLA	BUCHSE CASQUILLO
29	***3618249M1***		**1**	INDUCTIVE TAKER	CAPTEUR INDUCTIF SENSORE INDUTTIV	SENSOR GESCHWIN. CAPTADOR INDUCT.
30	3322463M2		**1**	JOURNAL	TENON ZONA APPOGGIO	LAGERZAPFEN GORRON
31	3019418X91	M22X1,5	**1**	UNION	RACCORD RACCORDO	VERSCHRAUBUNG RACOR
32	3019398X1	31	**1**	O RING	JOINT TORIQUE ANELLO OR	O-RING JUNTA TORICA
33	3792496M1		**1**	STEM	TIGE STELO	STIEL VASTAGO
34	3385622M2		**1**	SELECTOR	SELECTEUR SELETTORE	SELEKTOR SELECTOR
35	1441772X1		**1**	PLUG	BOUCHON TAPPO	VERSCHL.STOPFEN TAPON

Epicyclic Unit
Reducteur Epicycloidal
Untersetzungsgetriebe
Gruppo Epicicloidale
Unidad Epicicloidal

25-85

Creeper Gear Full Powershift Transmission
Reducteur De Vitesse Rampante Boite De Vitesse Full Powershift
Kriechganguebersetzung Getriebe Full Powershift
Riduttore Per Lenta Velocita Transmision Full Powershift
Reductore De Cambio Transmision Full Powershift

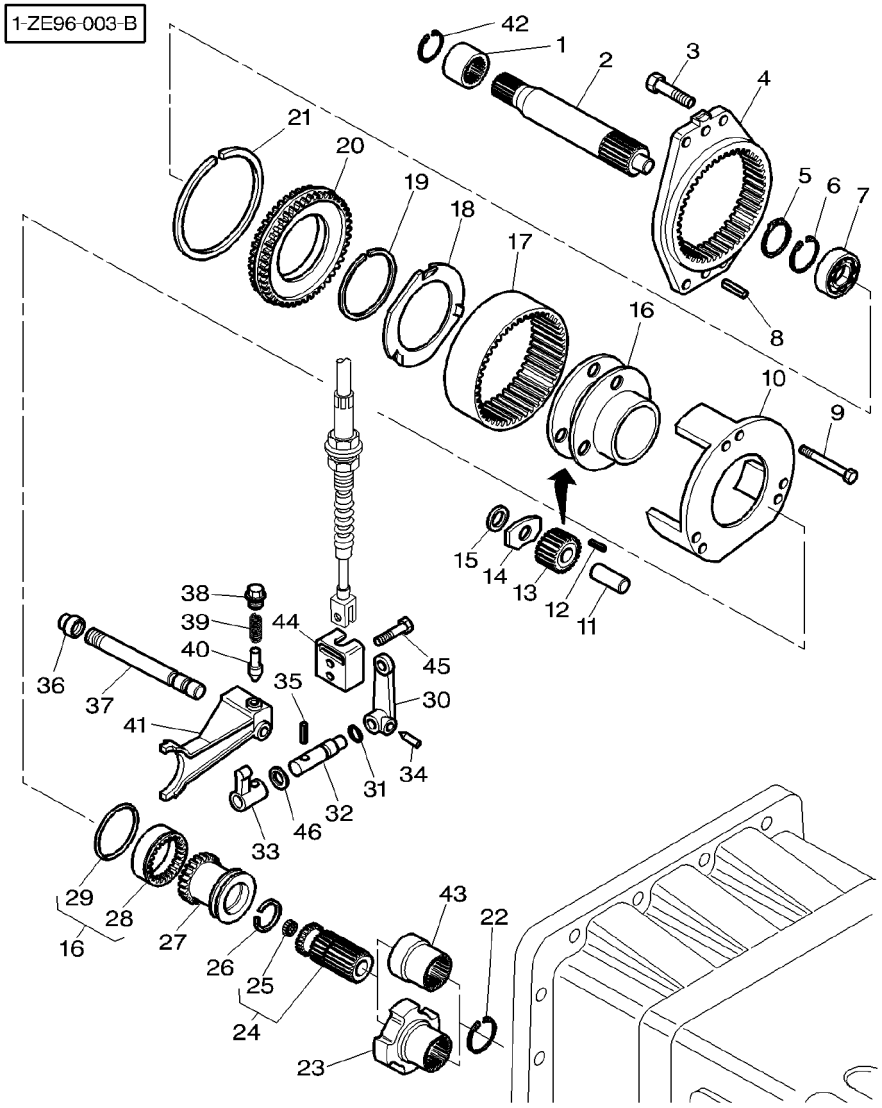

1	3716442M1		**1**	SLEEVE	MANCHON MANICOTTO	HUELSE MANCHA
2	3716838M2		**1**	SHAFT	ARBRE ALBERO	WELLE ARBOL
3	3009507X1	M12X35MM	**4**	SCREW METRIC	VIS METRIQUE VITE METRICA	SCHRAUBE METR TORNILLO METRICO
4	3716843M1		**1**	SUPPORT	SUPPORT SUPPORTO	LAGERUNG DISPOS.DE SOSTEN
5	339605X1		**1**	CIRCLIP	SEGMENT D ARRET ANELLO D'ARRESTO	SICHERUNGSRING CIRCULITO
6	339606X1		**1**	CIRCLIP	SEGMENT D ARRET ANELLO D'ARRESTO	SICHERUNGSRING CIRCULITO
7	3010128X1		**1**	BEARING ASSY	ROULEMENT CUSCINETTO COMPL	RADIALLAGER RODAMIENTO RAD
8	3385839M2		**2**	PIN	GOUPILLE PERNO	BOLZEN PASADOR
9	3015134X1	M6X65MM	**6**	SCREW	VIS VITE	SCHRAUBE TORNILLO
10	3716862M3		**1**	PLATE	PLAQUE PIASTRA	PLATTE PLATO
11	1866538M2		**3**	SHAFT	ARBRE ALBERO	WELLE ARBOL
12	1866553M2		**96**	ROLLER	GALET RULLO	ROLLE RODILLO
13	1866552M1		**3**	PINION	PIGNON PIGNONE	RITZEL PINON
14	1866543M1		**3**	WASHER	RONDELLE RONDELLA	UNTERLEGSCHEIBE ARANDELA
15	1866542M1		**6**	THRUST WASHER	RONDELLE BUTEE RONDELLA REGGISP	ANLAUFSCHEIBE ARANDELA ACELER
16	1866558M93		**1**	CARRIER	PORTE SATELLITES SUPPORTO SATELL.	TRAEGER PORTADOR
17	3716821M2		**1**	ANNULAR GEAR	COURONNE CORONA DENTATA	ZAHNKRANZ ENGRANAJE ANULAR
18	1866545M2		**2**	WASHER	RONDELLE RONDELLA	UNTERLEGSCHEIBE ARANDELA
19	377424X1		**1**	RING	ANNEAU ANELLO	RING ARO
20	3716837M1		**1**	SUPPORT	SUPPORT SUPPORTO	LAGERUNG DISPOS.DE SOSTEN
21	3010750X1	∅ 180MM	**1**	SEGMENT	SEGMENT SEGMENTO	SEGMENT SEGMENTO
22	1441247X1		**1**	RING	ANNEAU ANELLO	RING ARO
23	3791821M1	[A]	**1**	SLEEVE	MANCHON MANICOTTO	HUELSE MANCHA
24	3716840M11		**1**	SHAFT	ARBRE ALBERO	WELLE ARBOL
25	3010741X1	24	**1**	INSERT	DOUILLE INSERTO	EINSATZSTUECK INSERCION
26	3010640X1		**1**	RING	ANNEAU ANELLO	RING ARO

Epicyclic Unit
Reducteur Epicycloidal
Untersetzungsgetriebe
Gruppo Epicicloidale
Unidad Epicicloidal

25-85

Creeper Gear Full Powershift Transmission
Reducteur De Vitesse Rampante Boite De Vitesse Full Powershift
Kriechganguebersetzung Getriebe Full Powershift
Riduttore Per Lenta Velocita Transmision Full Powershift
Reductore De Cambio Transmision Full Powershift

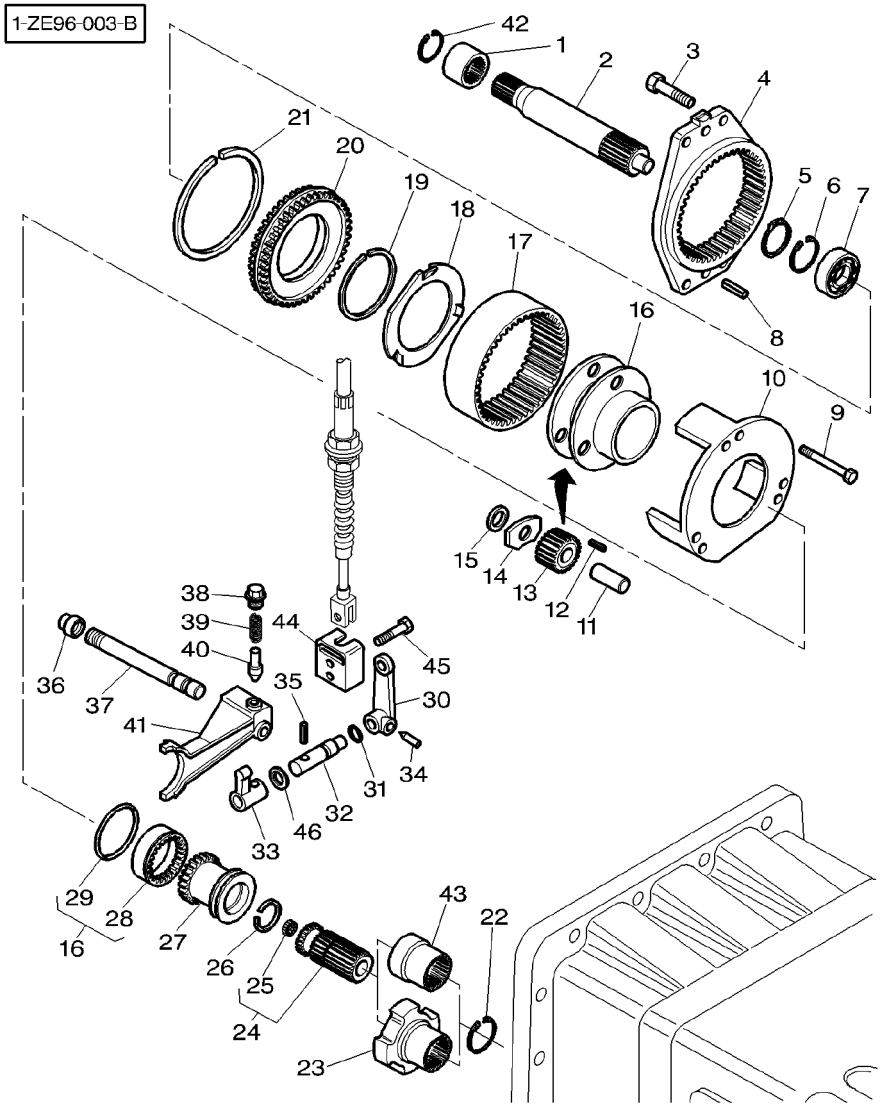

27	3716845M1		1	COUPLING	CRABOT ACCOPPIAMENTO	KUPPLUNG ACOPLAMIENTO
28	1866544M2	16	1	SPACER	ENTRETOISE DISTANZIALE	ABSTANDSTUECK PIEZA DISTANCIA
29	1866539M1	16	1	RING	ANNEAU ANELLO	RING ARO
30	3386195M2		1	ROD LINK	BIELLETTE BISCOTTINO	VERBINDG.STANGE VARILLA ENGANCHE
31	851258M1		1	O RING	JOINT TORIQUE ANELLO OR	O-RING JUNTA TORICA
32	3791633M1		1	CLEVIS PIN	AXE PERNO D'ATTACCO	SPLINTBOLZEN BULON CILINDRICO
33	3716449M1		1	SELECTOR	SELECTEUR SELETTORE	SELEKTOR SELECTOR
34	3382979M1		1	SCREW SPECIAL	VIS SPECIALE VITE SPECIALE	SPEZIALSCHRAUBE TORNILLO ESPEC.
35	3001293X1		1	PIN	GOUPILLE PERNO	BOLZEN PASADOR
36	3716447M2		1	NUT	ECROU DADO	MUTTER TUERCA
37	3716847M2		1	STEM	TIGE STELO	STIEL VASTAGO
38	3382343M1		1	PLUG	BOUCHON TAPPO	VERSCHL.STOPFEN TAPON
39	3794220M1		1	SPRING	RESSORT MOLLA	FEDER MUELLE
40	180418M2		1	PLUNGER	PLONGEUR STANTUFFO	TAUCHKOLBEN EMBOLO
41	3716846M3		1	FORK	FOURCHETTE FORCA	GABEL HORQUILLA
42	392376X1		1	CIRCLIP	SEGMENT D ARRET ANELLO D'ARRESTO	SICHERUNGSRING CIRCULITO
43	3716415M1		1	SLEEVE	MANCHON MANICOTTO	HUELSE MANCHA
44	3791565M2		1	THRUSTER	ARRETOIR SPINGITORE	DRUCKRING PROPULSOR
45	3009285X1	M8x16	2	SCREW	VIS VITE	SCHRAUBE TORNILLO
46	3792320M1	⧗ 0,50MM	X	CHOCK	CALE PASSACAVO	UNTERLEG-KEIL CALZA
46	3792321M1	⧗ 1MM	X	CHOCK	CALE PASSACAVO	UNTERLEG-KEIL CALZA
46	3792322M1	⧗ 3MM	X	CHOCK	CALE PASSACAVO	UNTERLEG-KEIL CALZA
46	3792361M1	⧗ 5MM	X	CHOCK	CALE PASSACAVO	UNTERLEG-KEIL CALZA

[A] WITH PARKING BRAKE
AVEC FREIN DE PARKING
MIT FESTSTELLBREMSE
CON FRENO DI PARCHEGGIO
CON CONTROLES DE FRENOS

Epicyclic Unit
Reducteur Epicycloidal
Untersetzungsgetriebe
Gruppo Epicicloidale
Unidad Epicicloidal

25-90

Creeper Gear Dynashift Transmission
Reducteur De Vitesse Rampante Boite De Vitesse Dynashift
Kriechganguebersetzung Getriebe Dynashift
Riduttore Per Lenta Velocita Transmision Dynashift
Reductore De Cambio Transmision Dynashift

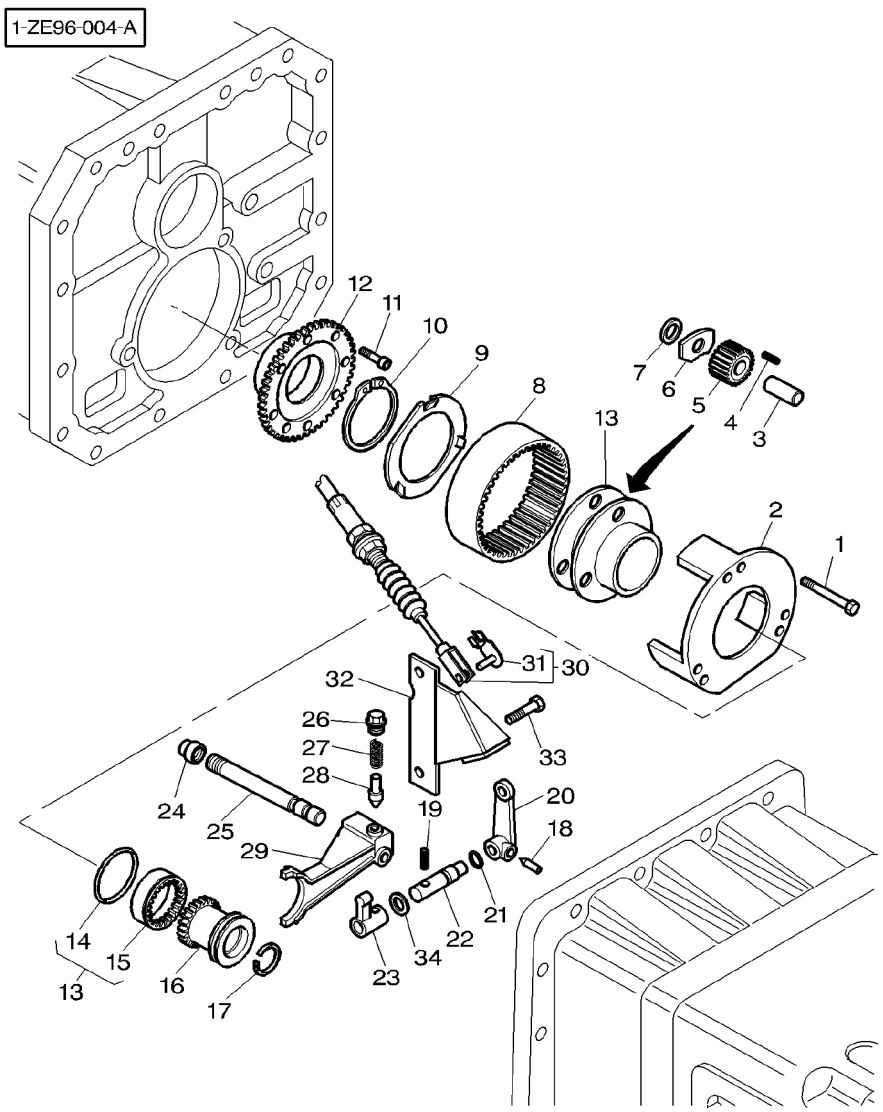

1	3015134X1	M6X65	**6**	SCREW	VIS VITE	SCHRAUBE TORNILLO
2	3716862M3		**1**	PLATE	PLAQUE PIASTRA	PLATTE PLATO
3	1866538M2		**3**	SHAFT	ARBRE ALBERO	WELLE ARBOL
4	1866553M2		**96**	ROLLER	GALET RULLO	ROLLE RODILLO
5	1866552M1		**3**	PINION	PIGNON PIGNONE	RITZEL PINON
6	1866543M1		**3**	WASHER	RONDELLE RONDELLA	UNTERLEGSCHEIBE ARANDELA
7	1866542M1		**6**	THRUST WASHER	RONDELLE BUTEE RONDELLA REGGISP	ANLAUFSCHEIBE ARANDELA ACELER
8	3716821M2		**1**	ANNULAR GEAR	COURONNE CORONA DENTATA	ZAHNKRANZ ENGRANAJE ANULAR
9	1866545M2		**2**	WASHER	RONDELLE RONDELLA	UNTERLEGSCHEIBE ARANDELA
10	377424X1		**1**	RING	ANNEAU ANELLO	RING ARO
11	1442647X1	M10X25MM	**8**	SCREW	VIS VITE	SCHRAUBE TORNILLO
12	3716835M3		**1**	SUPPORT	SUPPORT SUPPORTO	LAGERUNG DISPOS.DE SOSTEN
13	1866558M93		**1**	CARRIER	PORTE SATELLITES SUPPORTO SATELL.	TRAEGER PORTADOR
14	1866539M1	13	**1**	RING	ANNEAU ANELLO	RING ARO
15	1866544M2	13	**1**	SPACER	ENTRETOISE DISTANZIALE	ABSTANDSTUECK PIEZA DISTANCIA
16	3716845M1		**1**	COUPLING	CRABOT ACCOPPIAMENTO	KUPPLUNG ACOPLAMIENTO
17	3010640X1		**1**	RING	ANNEAU ANELLO	RING ARO
18	3382979M1	M8X20	**1**	SCREW SPECIAL	VIS SPECIALE VITE SPECIALE	SPEZIALSCHRAUBE TORNILLO ESPEC.
19	3001293X1		**1**	PIN	GOUPILLE PERNO	BOLZEN PASADOR
20	3386195M2		**1**	ROD LINK	BIELLETTE BISCOTTINO	VERBINDG.STANGE VARILLA ENGANCHE
21	851258M1		**1**	O RING	JOINT TORIQUE ANELLO OR	O-RING JUNTA TORICA
22	3791633M1		**1**	CLEVIS PIN	AXE PERNO D'ATTACCO	SPLINTBOLZEN BULON CILINDRICO
23	3716449M1		**1**	SELECTOR	SELECTEUR SELETTORE	SELEKTOR SELECTOR
24	3716447M2		**1**	NUT	ECROU DADO	MUTTER TUERCA
25	3716869M3		**1**	STEM	TIGE STELO	STIEL VASTAGO
26	3382343M1		**1**	PLUG	BOUCHON TAPPO	VERSCHL.STOPFEN TAPON

Epicyclic Unit
Reducteur Epicycloidal
Untersetzungsgetriebe
Gruppo Epicicloidale
Unidad Epicicloidal

25-90

Creeper Gear Dynashift Transmission
Reducteur De Vitesse Rampante Boite De Vitesse Dynashift
Kriechganguebersetzung Getriebe Dynashift
Riduttore Per Lenta Velocita Transmision Dynashift
Reductore De Cambio Transmision Dynashift

1-ZE96-004-A

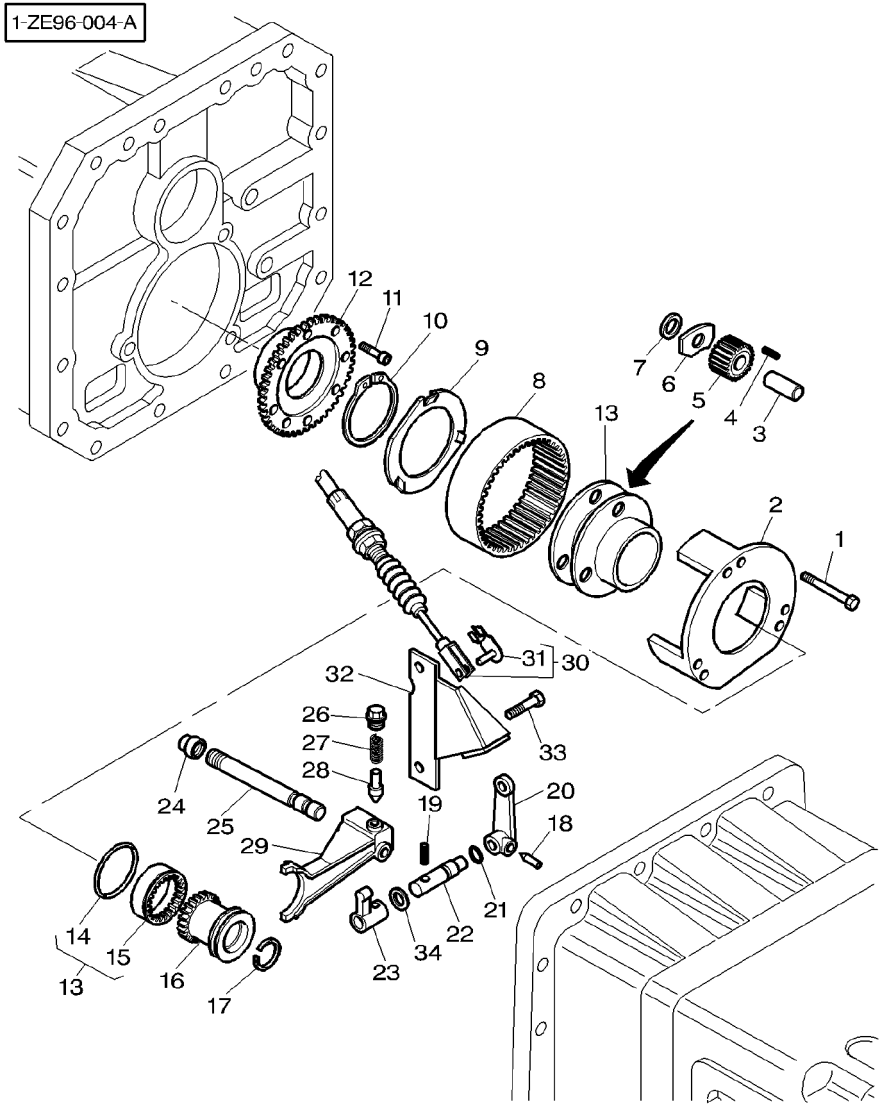

27	3794220M1			1	SPRING	RESSORT MOLLA	FEDER MUELLE
28	180418M2			1	PLUNGER	PLONGEUR STANTUFFO	TAUCHKOLBEN EMBOLO
29	3791158M1			1	FORK	FOURCHETTE FORCA	GABEL HORQUILLA
30	3712989M2			1	CABLE	CABLE CAVO	KABEL CABLE
31	3600191M1	30		1	CLEVIS PIN	AXE PERNO D'ATTACCO	SPLINTBOLZEN BULON CILINDRICO
32	3791839M1			1	THRUSTER	ARRETOIR SPINGITORE	DRUCKRING PROPULSOR
33	354264X1		∅ 3/8" ◂▸ 44,4 MM	2	BOLT UNC	BOULON UNC BULLONE UNC	MASCH.SCHRB.UNC PERNO UNC
34	3792320M1		⧗ 0,50MM	X	CHOCK	CALE PASSACAVO	UNTERLEG-KEIL CALZA
34	3792321M1		⧗ 1,00MM	X	CHOCK	CALE PASSACAVO	UNTERLEG-KEIL CALZA
34	3792322M1		⧗ 3,00MM	X	CHOCK	CALE PASSACAVO	UNTERLEG-KEIL CALZA
34	3792361M1		⧗ 5,00MM	X	CHOCK	CALE PASSACAVO	UNTERLEG-KEIL CALZA

Transmission **Boite De Vitesses** **Getriebe** **Trasmissione** **Transmision**	**Output Shaft** **Arbre De Sortie** **Ausgangswelle** **Albero Primario** **Arbol Generador De Fuerza**	**25-95**	**Full Powershift Without Creeper Gear** **Full Powershift Sans Reducteur De Vitesse Rampante** **Full Powershift Ohne Kriechganguebersetzung** **Full Powershift Senza Riduttore Per Lenta Velocita** **Full Powershift Sin Reductore De Cambio**

1-ZE99-002-A

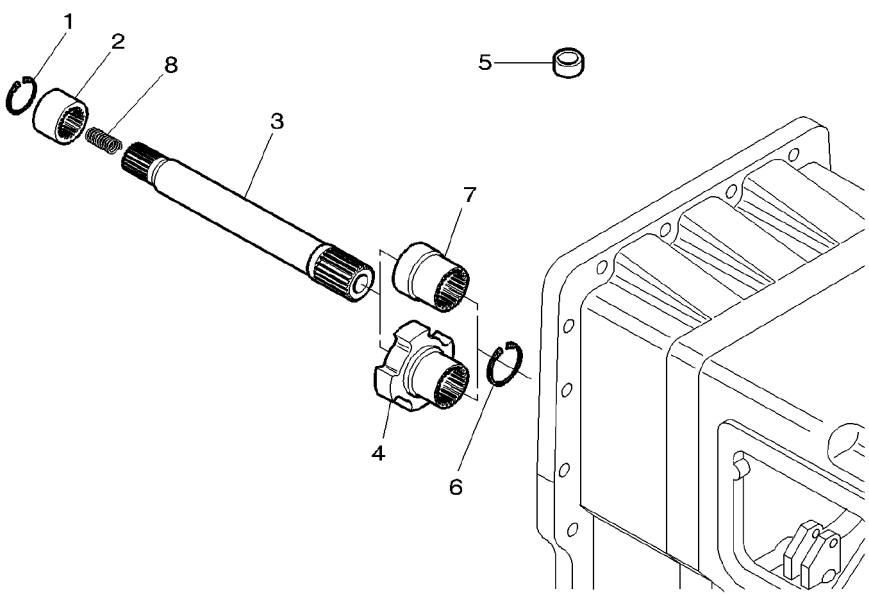

1	392376X1		**1**	CIRCLIP	SEGMENT D ARRET ANELLO D'ARRESTO	SICHERUNGSRING CIRCULITO
2	3716442M1		**1**	SLEEVE	MANCHON MANICOTTO	HUELSE MANCHA
3	3716459M3		**1**	SHAFT	ARBRE ALBERO	WELLE ARBOL
4	3791821M1	[A]	**1**	SLEEVE	MANCHON MANICOTTO	HUELSE MANCHA
5	3006020X1	∅ 20MM	**1**	PLUG	BOUCHON TAPPO	VERSCHL.STOPFEN TAPON
6	1441247X1		**1**	RING	ANNEAU ANELLO	RING ARO
7	3716415M1		**1**	SLEEVE	MANCHON MANICOTTO	HUELSE MANCHA
8	3715534M1		**1**	SPRING	RESSORT MOLLA	FEDER MUELLE

[A] WITH PARKING BRAKE
AVEC FREIN DE PARKING
MIT FESTSTELLBREMSE
CON FRENO DI PARCHEGGIO
CON CONTROLES DE FRENOS

Transmission **Boite De Vitesses** **Getriebe** **Trasmissione** **Transmision**	**Output Shaft** **Arbre De Sortie** **Ausgangswelle** **Albero Primario** **Arbol Generador De Fuerza**	**25-100**	**Dynashift Without Creeper Gear** **Dynashift Sans Reducteur De Vitesse Rampante** **Dynashift Ohne Kriechganguebersetzung** **Dynashift Senza Riduttore Per Lenta Velocita** **Dynashift Sin Reductore De Cambio**

1-ZE99-003-A

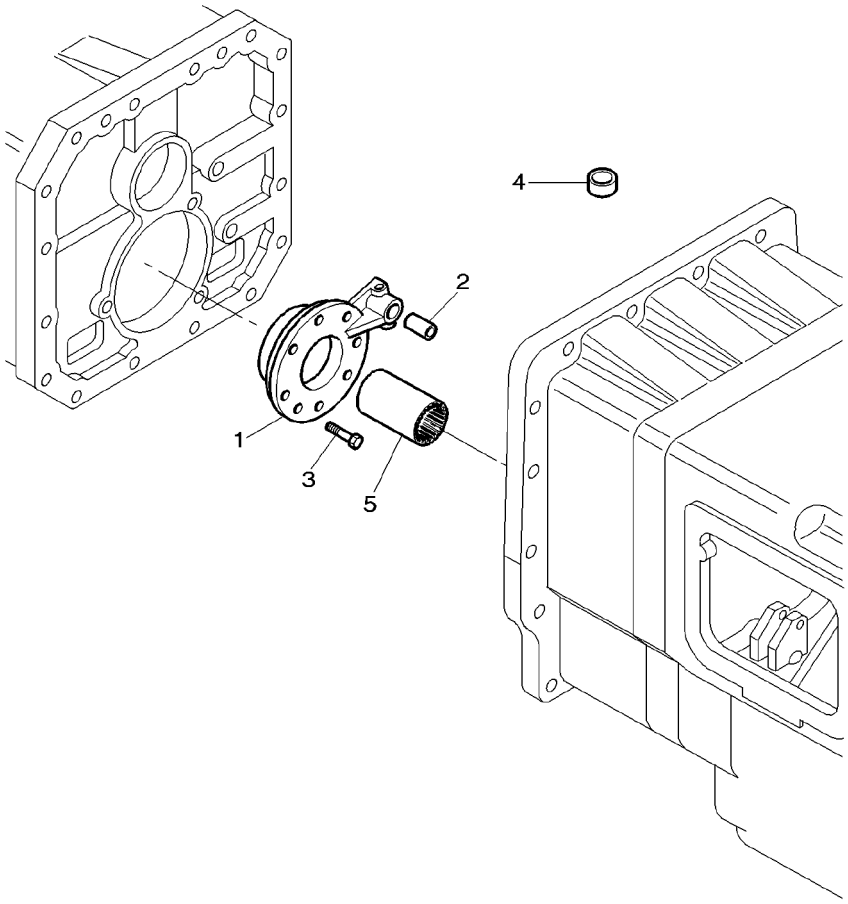

1	3716238M4	**1**	SUPPORT	SUPPORT SUPPORTO	LAGERUNG DISPOS.DE SOSTEN
2	3716240M3	**1**	PIN	GOUPILLE PERNO	BOLZEN PASADOR
3	3009293X1	**8**	SCREW	VIS VITE	SCHRAUBE TORNILLO
4	3006020X1	**1**	PLUG	BOUCHON TAPPO	VERSCHL.STOPFEN TAPON
5	3791822M1	**1**	SLEEVE	MANCHON MANICOTTO	HUELSE MANCHA

Creeper Gearbox Control
Commande De Vitesse Rampante
Kriechganggetriebe−Schaltung
Comando Super Riduttore
Mando De Caja Superlenta

25-105

1-ZF10-004-A

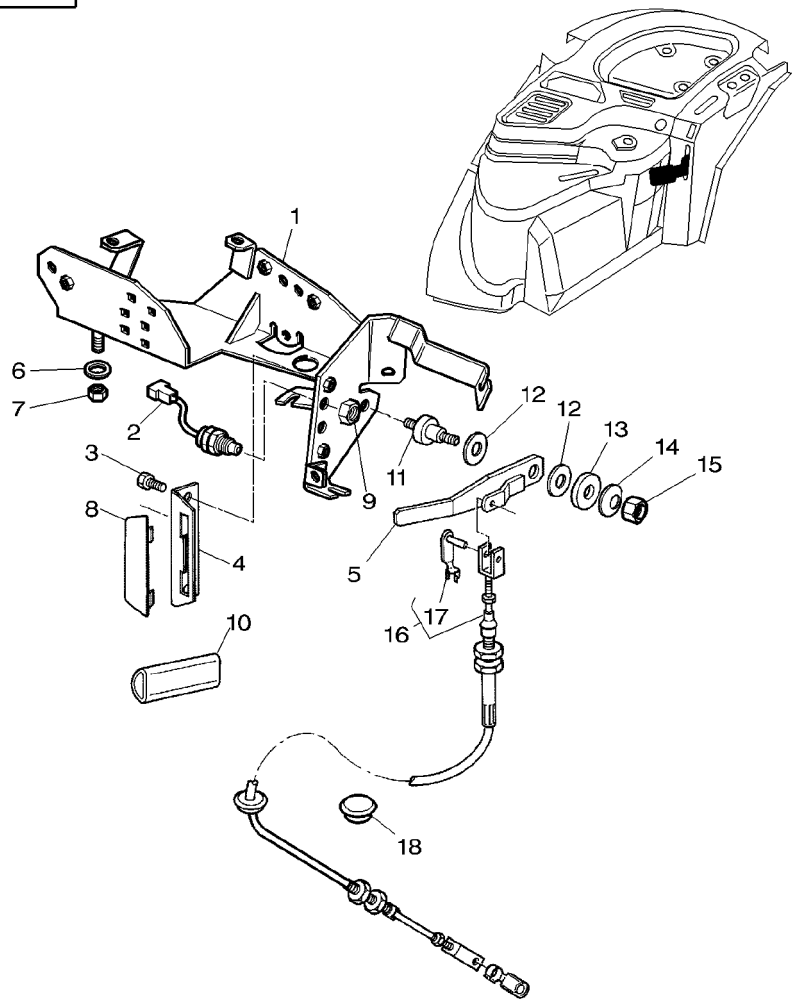

1	3778480M91		**1**	SUPPORT	SUPPORT SUPPORTO	LAGERUNG DISPOS.DE SOSTEN
2	***3780581M1***		**1**	SWITCH,INDIRECT	CONTACTEUR INTERRUTTORE IND	KONTAKTSCHALTER CONTACTOR
3	339228X1	M8X12	**2**	SCREW METRIC	VIS METRIQUE VITE METRICA	SCHRAUBE METR TORNILLO METRICO
4	3712275M1		**1**	GRILLE	GRILLE GRIGLIA	GRILL REJILLA
5	3712281M3		**1**	LEVER	LEVIER LEVA	HEBEL PALANCA
6	385361X1		**4**	WASHER METRIC	RONDELLE METR. RONDELLA METRICO	SCHEIBE METRISCH ARANDELA METRICO
7	1441461X1		**4**	NUT METRIC	ECROU METRIQUE DADO METRICO	MUTTER METRISCH TUERCA METRICO
8	3712984M1		**X**	PLATE	PLAQUE PIASTRA	PLATTE PLATO
9	3386198M1		**1**	NUT SPECIAL	ECROU SPECIAL DADO SPECIALE	SPEZIALMUTTER TUERCA ESPECIAL
10	3712976M2		**1**	HANDLE	POIGNEE MANIGLIA	HANDGRIFF MANETA
11	3712277M1		**1**	CLEVIS PIN	AXE PERNO D'ATTACCO	SPLINTBOLZEN BULON CILINDRICO
12	3386166M1		**2**	WASHER	RONDELLE RONDELLA	UNTERLEGSCHEIBE ARANDELA
13	1442174X1		**1**	WASHER	RONDELLE RONDELLA	UNTERLEGSCHEIBE ARANDELA
14	3386192M1		**1**	WASHER	RONDELLE RONDELLA	UNTERLEGSCHEIBE ARANDELA
15	1441461X1		**1**	NUT METRIC	ECROU METRIQUE DADO METRICO	MUTTER METRISCH TUERCA METRICO
16	3712989M2		**1**	CABLE	CABLE CAVO	KABEL CABLE
17	3600190M1	16 ◄► 28MM	**1**	CLEVIS PIN	AXE PERNO D'ATTACCO	SPLINTBOLZEN BULON CILINDRICO
17	3600191M1	16 ◄► 40MM	**1**	CLEVIS PIN	AXE PERNO D'ATTACCO	SPLINTBOLZEN BULON CILINDRICO
18	3713587M1	∅ 22MM	**1**	PLUG	BOUCHON TAPPO	VERSCHL.STOPFEN TAPON

Creeper Gearbox Control
Commande De Vitesse Rampante
Kriechganggetriebe−Schaltung
Comando Super Riduttore
Mando De Caja Superlenta

25-110

With Dynashift
Avec Dynashift
Mit Dynashift
Con Dynashift
Con Dynashift

1-ZF10-003-B

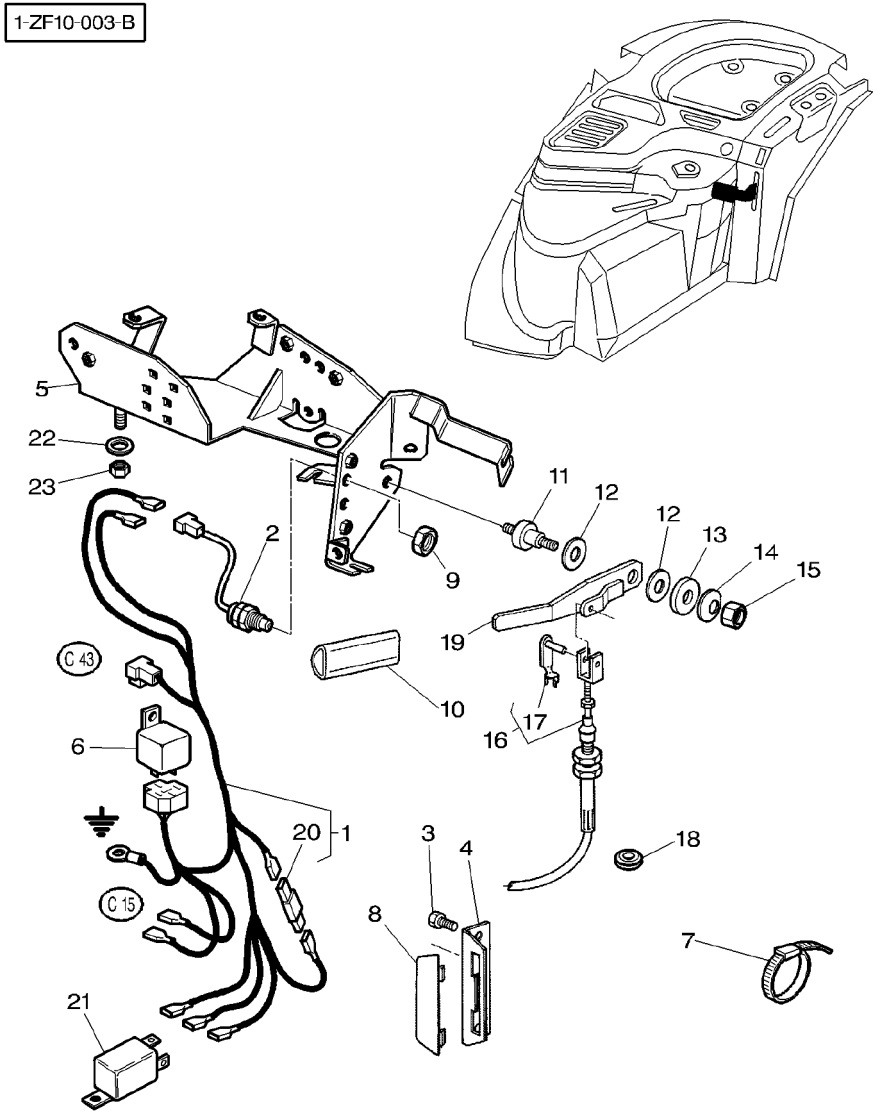

1	3714539M92		**1**	HARNESS	FAISCEAU FASCIOCAVI	KABELBAUM MAZO CABLES
2	***3780581M1***		**1**	SWITCH,INDIRECT	CONTACTEUR INTERRUTTORE IND	KONTAKTSCHALTER CONTACTOR
3	339228X1	M8X12	**2**	SCREW METRIC	VIS METRIQUE VITE METRICA	SCHRAUBE METR TORNILLO METRICO
4	3712275M1		**1**	GRILLE	GRILLE GRIGLIA	GRILL REJILLA
5	3778480M91		**1**	SUPPORT	SUPPORT SUPPORTO	LAGERUNG DISPOS.DE SOSTEN
6	***3618239M1***		**1**	RELAY	RELAIS RELE	RELAIS RELE
7	3619622M1		**5**	CABLE TIE	ATTACHE CABLE FASCETTA CAVI	KABELBINDER ENLACE DE CABLE
8	3712984M1	[A]	**1**	PLATE	PLAQUE PIASTRA	PLATTE PLATO
9	3386198M1		**1**	NUT SPECIAL	ECROU SPECIAL DADO SPECIALE	SPEZIALMUTTER TUERCA ESPECIAL
10	3712976M2		**1**	HANDLE	POIGNEE MANIGLIA	HANDGRIFF MANETA
11	3712277M1		**1**	CLEVIS PIN	AXE PERNO D'ATTACCO	SPLINTBOLZEN BULON CILINDRICO
12	3386166M1		**2**	WASHER	RONDELLE RONDELLA	UNTERLEGSCHEIBE ARANDELA
13	1442174X1		**1**	WASHER	RONDELLE RONDELLA	UNTERLEGSCHEIBE ARANDELA
14	3386192M1		**1**	WASHER	RONDELLE RONDELLA	UNTERLEGSCHEIBE ARANDELA
15	1441461X1		**1**	NUT METRIC	ECROU METRIQUE DADO METRICO	MUTTER METRISCH TUERCA METRICO
16	3712989M2		**1**	CABLE	CABLE CAVO	KABEL CABLE
17	3600190M1	16 ◄► 28MM	**1**	CLEVIS PIN	AXE PERNO D'ATTACCO	SPLINTBOLZEN BULON CILINDRICO
17	3600191M1	16 ◄► 40MM	**1**	CLEVIS PIN	AXE PERNO D'ATTACCO	SPLINTBOLZEN BULON CILINDRICO
18	3713587M1	[A]	**1**	PLUG	BOUCHON TAPPO	VERSCHL.STOPFEN TAPON
19	3712281M3		**1**	LEVER	LEVIER LEVA	HEBEL PALANCA
20	***1897312M1***	1 <⇨ 3615548M1	**1**	DIODE	DIODE DIODO	DIODE DIODO
21	***3615652M1***	12V − 25A	**1**	RELAY	RELAIS RELE	RELAIS RELE
22	385361X1		**4**	WASHER METRIC	RONDELLE METR. RONDELLA METRICO	SCHEIBE METRISCH ARANDELA METRICO
23	1441461X1		**4**	NUT METRIC	ECROU METRIQUE DADO METRICO	MUTTER METRISCH TUERCA METRICO

Creeper Gearbox Control **Commande De Vitesse Rampante** **Kriechganggetriebe−Schaltung** **Comando Super Riduttore** **Mando De Caja Superlenta**	**25-110**	**With Dynashift** **Avec Dynashift** **Mit Dynashift** **Con Dynashift** **Con Dynashift**

1-ZF10-003-B

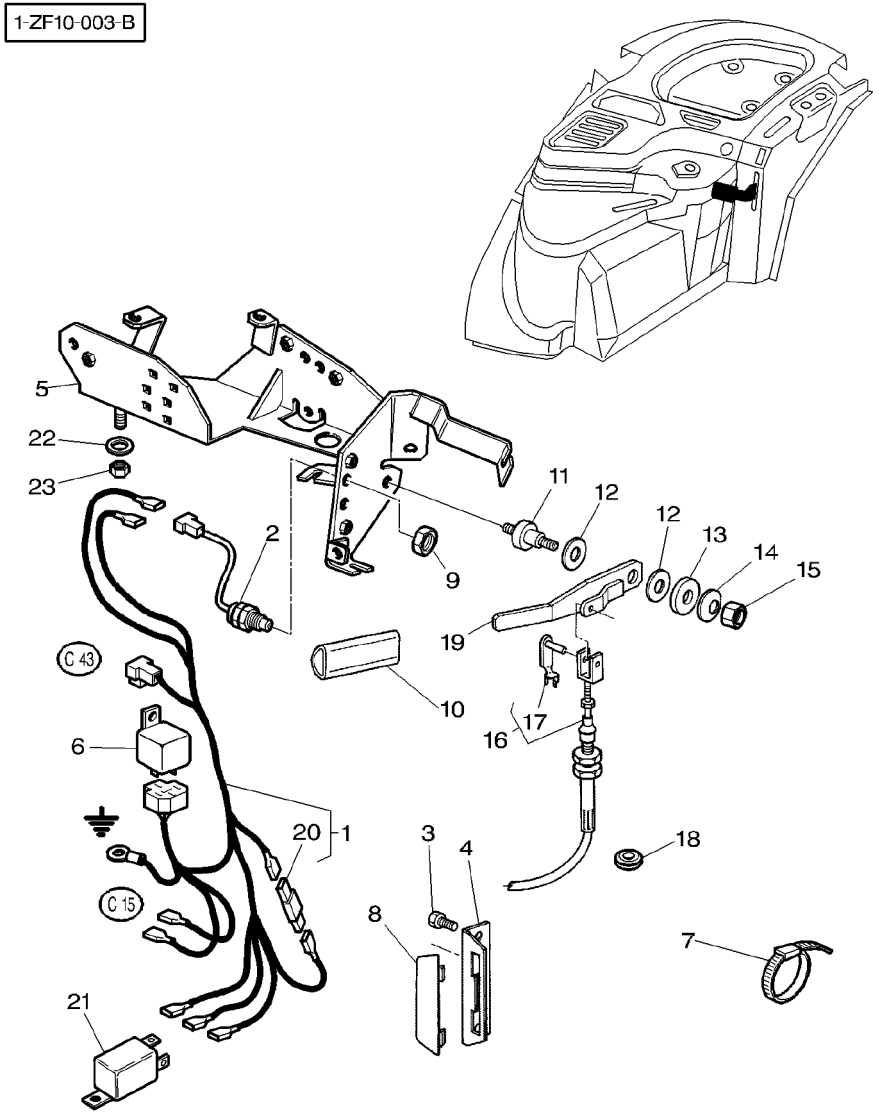

[A] WITHOUT CREEPER GEAR
SANS REDUCTEUR DE VITESSE RAMPANTE
OHNE KRIECHGANGUEBERSETZUNG
SENZA RIDUTTORE PER LENTA VELOCITA
SIN REDUCTORE DE CAMBIO

Manual Shuttle Shift Levers **Levier D'Inverseur Manuel** **Schalthebel Handschaltung** **Leve Comando Di Inversore Manuale** **Palancas De Mando Inversor Mecanico**	**Left Hand Controls** **Commande A Gauche** **Links Antrieb** **Comandi Sinistra** **Mandos Izquierda**	**25-115**	**With Dynashift** **Avec Dynashift** **Mit Dynashift** **Con Dynashift** **Con Dynashift**

1-ZF83-002-B

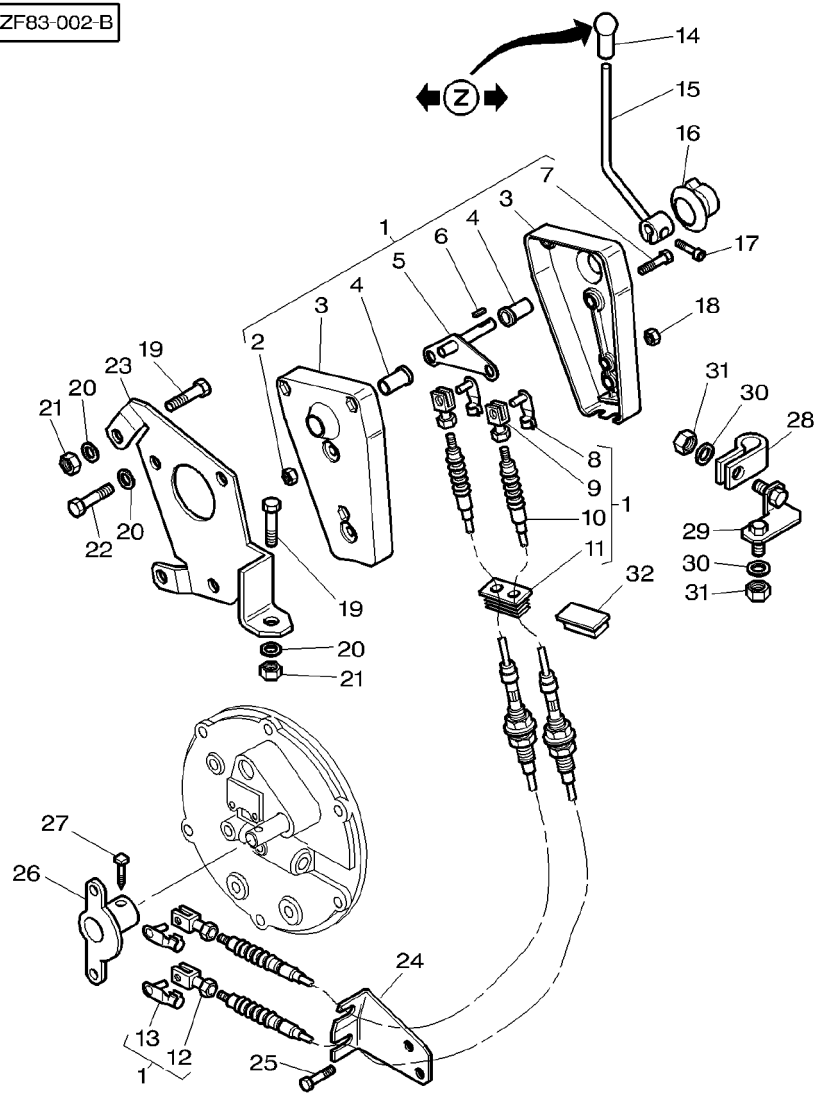

1	3781242M92		**1**	CASE ASSY	BOITIER CARCASSA COMPLET	GEHAEUSE KPL CAJA COMPLETA
2	339030X1	1 M6	**2**	NUT METRIC	ECROU METRIQUE DADO METRICO	MUTTER METRISCH TUERCA METRICO
3	3782222M1	1	**2**	CASE ASSY	BOITIER CARCASSA COMPLET	GEHAEUSE KPL CAJA COMPLETA
4	3385604M1	1	**2**	BEARING	COUSSINET CUSCINETTO	LAGER COJINETE
5	3782223M1	1	**1**	ROCKERARM	LEVIER OSCILLANT ALBERO PUNTERIE	KIPPHEBEL PALANCA BALANCIN
6	3782221M1	1 5x5x25 MM	**1**	KEY	CLAVETTE CHIAVETTA	PASSKEIL CLAVE
7	339666X1	1 M6x20	**2**	SCREW METRIC	VIS METRIQUE VITE METRICA	SCHRAUBE METR TORNILLO METRICO
8	3782220M1	1 ◀▶ 12 MM	**1**	CLEVIS PIN	AXE PERNO D'ATTACCO	SPLINTBOLZEN BULON CILINDRICO
9	3009130X1	1 ◀▶ 12 MM	**1**	CLEVIS	CHAPE GANCIO D'ATTACCO	GABELSTUECK GANCHO SEGURI.
10	3782217M1	1 ◀▶ 2370 MM	**2**	CABLE	CABLE CAVO	KABEL CABLE
11	3782218M1	1	**1**	PLUG	BOUCHON TAPPO	VERSCHL.STOPFEN TAPON
12	392463X1	1 ◀▶ 24 MM	**1**	CLEVIS	CHAPE GANCIO D'ATTACCO	GABELSTUECK GANCHO SEGURI.
13	3713042M1	1 ◀▶ 24 MM	**1**	CLEVIS PIN	AXE PERNO D'ATTACCO	SPLINTBOLZEN BULON CILINDRICO
14	3613871M3		**1**	KNOB	POMMEAU POMELLO	KNOPF POMO
15	3780365M1		**1**	LEVER	LEVIER LEVA	HEBEL PALANCA
16	3780654M1		**1**	BELLOWS	SOUFFLET SOFFIETTO	FALTENBALG FUELLE
17	3009285X1	M8x16	**1**	SCREW	VIS VITE	SCHRAUBE TORNILLO
18	1441461X1	M8	**3**	NUT METRIC	ECROU METRIQUE DADO METRICO	MUTTER METRISCH TUERCA METRICO
19	339124X1	M8x16	**3**	SCREW METRIC	VIS METRIQUE VITE METRICA	SCHRAUBE METR TORNILLO METRICO
20	390972X1	M8	**6**	WASHER METRIC	RONDELLE METR. RONDELLA METRICO	SCHEIBE METRISCH ARANDELA METRICO
21	1441461X1	M8	**3**	NUT METRIC	ECROU METRIQUE DADO METRICO	MUTTER METRISCH TUERCA METRICO
22	339009X1	M8x35	**3**	BOLT METRIC	BOULON METRIQUE BULLONE METRICO	MASCH.SCHRB MET PERNO METRICO
23	3780375M1		**1**	SUPPORT	SUPPORT SUPPORTO	LAGERUNG DISPOS.DE SOSTEN
24	3783109M1		**1**	SUPPORT	SUPPORT SUPPORTO	LAGERUNG DISPOS.DE SOSTEN
25	339123X1	M8x20	**2**	SCREW METRIC	VIS METRIQUE VITE METRICA	SCHRAUBE METR TORNILLO METRICO
26	3783108M1		**1**	SELECTOR	SELECTEUR SELETTORE	SELEKTOR SELECTOR

Manual Shuttle Shift Levers Levier D'Inverseur Manuel Schalthebel Handschaltung Leve Comando Di Inversore Manuale Palancas De Mando Inversor Mecanico	Left Hand Controls Commande A Gauche Links Antrieb Comandi Sinistra Mandos Izquierda	25-115	With Dynashift Avec Dynashift Mit Dynashift Con Dynashift Con Dynashift

1-ZF83-002-B

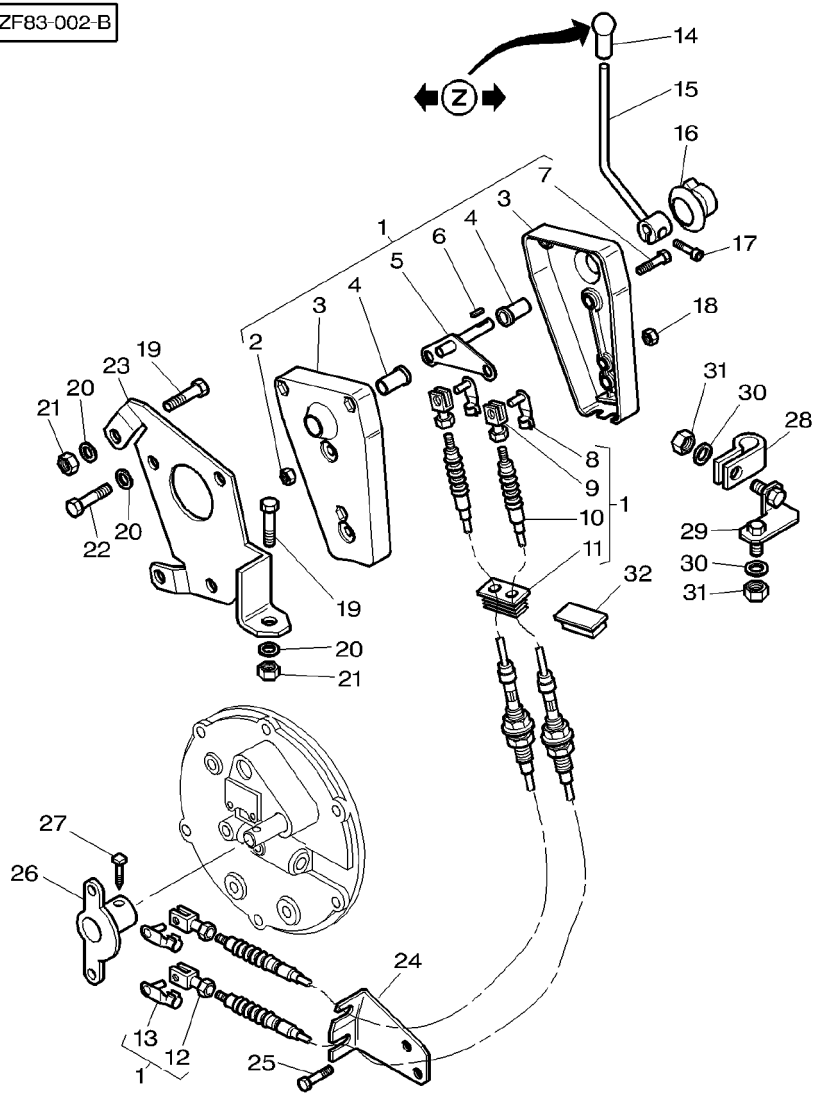

27	3771408M1	∅ 3/4"	**1**	SCREW	VIS VITE	SCHRAUBE TORNILLO
28	360567X1		**1**	CLAMP	COLLIER FASCETTA	HALTESCHELLE ABRAZADERA
29	3782598M1		**1**	STRAP	PATTE CORREGGIA	LASCHE FAJA
30	390972X1		**2**	WASHER METRIC	RONDELLE METR. RONDELLA METRICO	SCHEIBE METRISCH ARANDELA METRICO
31	1441461X1		**2**	NUT METRIC	ECROU METRIQUE DADO METRICO	MUTTER METRISCH TUERCA METRICO
32	3780926M1	[A]	**1**	STUB	EMBOUT CEPPO	STUMMEL SALIENTE

[A] WITHOUT MANUAL SHUTTLE SHIFT LEVERS LEFT HAND CONTROLS
SANS LEVIER D'INVERSEUR MANUEL COMMANDE A GAUCHE
OHNE SCHALTHEBEL HANDSCHALTUNG LINKS ANTRIEB
SIN LEVE COMANDO DI INVERSORE MANUALE COMANDI SINISTRA
SIN PALANCAS DE MANDO INVERSOR MECANICO MANDOS IZQUIERDA

Shift Lever
Leviers De Vitesse
Schalthebel
Leva Cambio
Palanca De Cambio

25-120

With Dynashift
Avec Dynashift
Mit Dynashift
Con Dynashift
Con Dynashift

1-ZE93-002-B

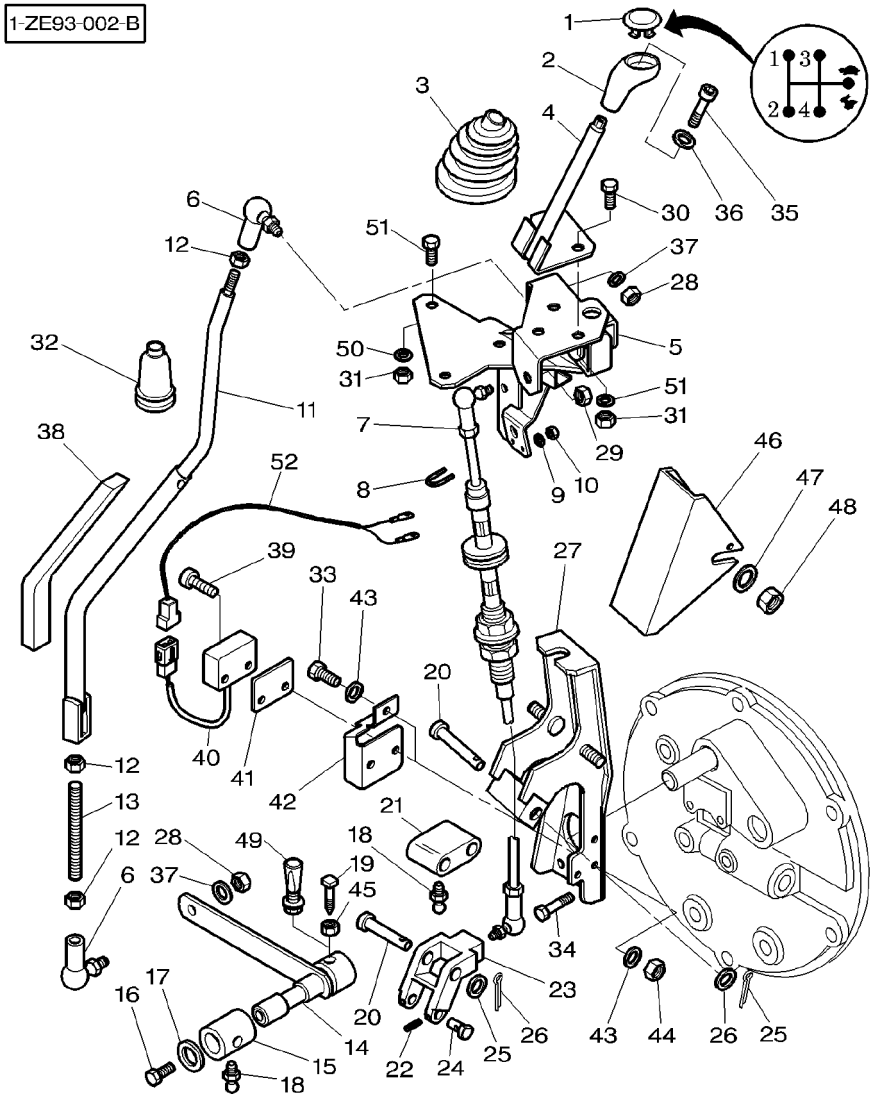

1	3782025M1		**1**	HELMET	CAPUCHON CASCO	SCHUTZHELM CASCO
2	3781587M1		**1**	HANDLE	POIGNEE MANIGLIA	HANDGRIFF MANETA
3	3781060M1		**1**	BELLOWS	SOUFFLET SOFFIETTO	FALTENBALG FUELLE
4	3781979M2	➡| H104014	**1**	LEVER	LEVIER LEVA	HEBEL PALANCA
4	3781979M3	|➡ H104015	**1**	LEVER	LEVIER LEVA	HEBEL PALANCA
5	3781577M91	➡| H104014	**1**	SUPPORT	SUPPORT SUPPORTO	LAGERUNG DISPOS.DE SOSTEN
5	3781577M92	|➡ H104015	**1**	SUPPORT	SUPPORT SUPPORTO	LAGERUNG DISPOS.DE SOSTEN
6	3781935M1		**2**	STUB	EMBOUT CEPPO	STUMMEL SALIENTE
7	3781153M1	◀▶ 819 MM	**1**	CABLE	CABLE CAVO	KABEL CABLE
8	3781002M1	M6	**1**	STIRRUP	ETRIER STAFFA	BUEGEL ESTRIBO
9	390971X1	M6	**2**	WASHER METRIC	RONDELLE METR. RONDELLA METRICO	SCHEIBE METRISCH ARANDELA METRICO
10	1441462X1	M6	**2**	LOCKNUT	ECROU BLOCAGE AUTOBLOCCANTE	FLACHMUTTER CONTRATUERCA
11	3781582M1		**1**	ROD	TRINGLE ASTA	STANGE VARILLA
12	3009693X1	M10	**3**	NUT METRIC	ECROU METRIQUE DADO METRICO	MUTTER METRISCH TUERCA METRICO
13	3781578M1	∅ M10	**1**	STEM	TIGE STELO	STIEL VASTAGO
14	3781561M3	➡| J021015	**1**	SELECTOR	SELECTEUR SELETTORE	SELEKTOR SELECTOR
14	3783463M1	|➡ J021016	**1**	SELECTOR	SELECTEUR SELETTORE	SELEKTOR SELECTOR
15	3781559M1		**1**	BUSH	BAGUE BOCCOLA	BUCHSE CASQUILLO
16	339228X1	M8x12	**1**	SCREW METRIC	VIS METRIQUE VITE METRICA	SCHRAUBE METR TORNILLO METRICO
17	3010467X1	∅ 9–30 MM ⧗ 2 MM	**1**	WASHER	RONDELLE RONDELLA	UNTERLEGSCHEIBE ARANDELA
18	1441858X1	M6	**2**	GREASER	GRAISSEUR INGRASSATORE	FETTNIPPEL ENGRASADOR
19	3771408M1	∅ 3/8" ➡| J021015	**1**	SCREW	VIS VITE	SCHRAUBE TORNILLO
20	3383531M1		**2**	CLEVIS PIN	AXE PERNO D'ATTACCO	SPLINTBOLZEN BULON CILINDRICO
21	3781566M1		**1**	ANGLE TRANS.	RENVOI ANGOLO TRASMISS.	WINKELGETRIEBE TRANSANGULAR
22	70934582	∅ 3 MM ◀▶ 26 MM	**2**	PIN	GOUPILLE PERNO	BOLZEN PASADOR
23	3781585M1		**1**	CAM	CAME CAMMA	NOCKEN LEVA

Shift Lever
Leviers De Vitesse
Schalthebel
Leva Cambio
Palanca De Cambio

25-120

With Dynashift
Avec Dynashift
Mit Dynashift
Con Dynashift
Con Dynashift

1-ZE93-002-B

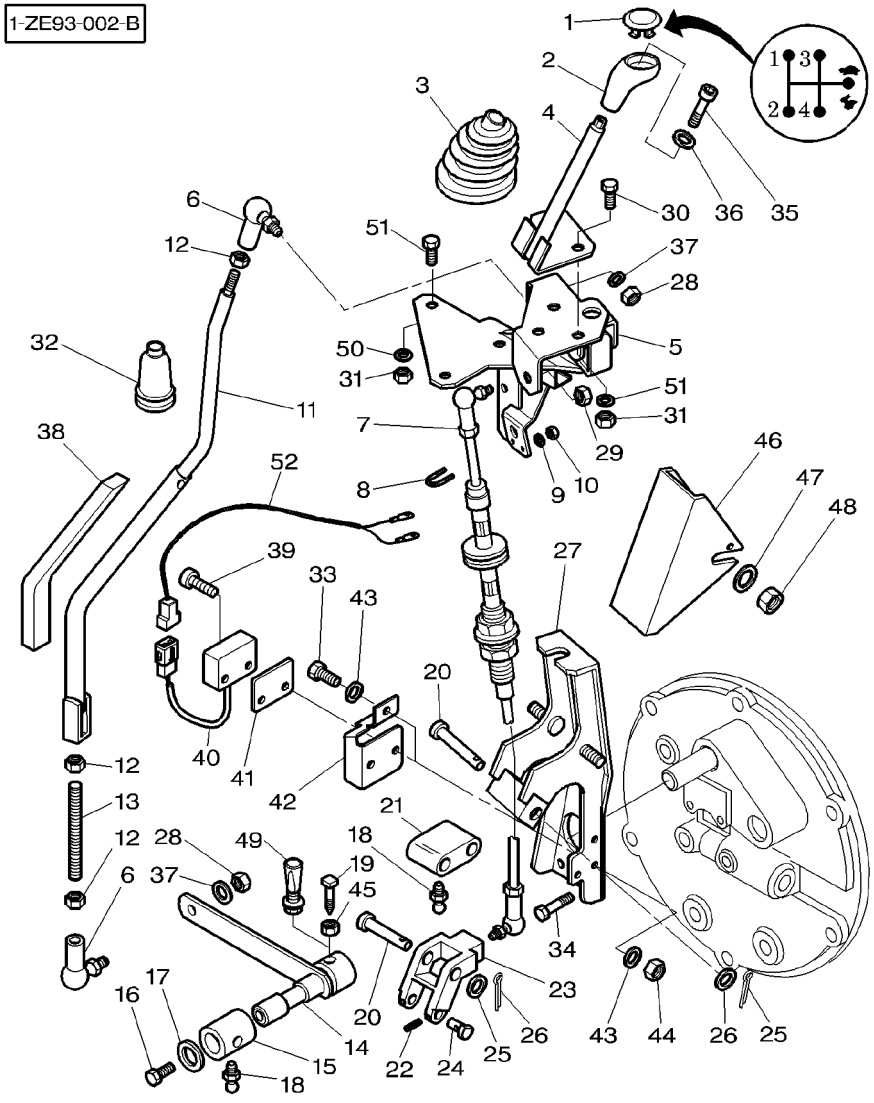

24	3781586M1		2	CENTRALISER	PION CENTRALIZZATORE	FUEHRUNGSKORB CENTRALIZADOR
25	390735X1	∅ 12–24 MM 2,5 MM	2	WASHER	RONDELLE RONDELLA	UNTERLEGSCHEIBE ARANDELA
26	354066X1	∅ 4 MM 25 MM	2	PIN	GOUPILLE PERNO	BOLZEN PASADOR
27	3781583M94		1	SUPPORT	SUPPORT SUPPORTO	LAGERUNG DISPOS.DE SOSTEN
28	1440329X1	M10	2	LOCKNUT	ECROU BLOCAGE AUTOBLOCCANTE	FLACHMUTTER CONTRATUERCA
29	1441461X1	M8	1	NUT METRIC	ECROU METRIQUE DADO METRICO	MUTTER METRISCH TUERCA METRICO
30	339123X1	M8x20	x	SCREW METRIC	VIS METRIQUE VITE METRICA	SCHRAUBE METR TORNILLO METRICO
31	1441461X1	M8	x	NUT METRIC	ECROU METRIQUE DADO METRICO	MUTTER METRISCH TUERCA METRICO
32	3782005M1	➡| H140028	1	BELLOWS	SOUFFLET SOFFIETTO	FALTENBALG FUELLE
32	3783137M1	➡ H140029	1	BELLOWS	SOUFFLET SOFFIETTO	FALTENBALG FUELLE
33	3001162X1	M4X16	1	SCREW	VIS VITE	SCHRAUBE TORNILLO
34	339123X1	M8x20	2	SCREW METRIC	VIS METRIQUE VITE METRICA	SCHRAUBE METR TORNILLO METRICO
35	3009281X1	M6X16	1	SCREW	VIS VITE	SCHRAUBE TORNILLO
36	390971X1		1	WASHER METRIC	RONDELLE METR. RONDELLA METRICO	SCHEIBE METRISCH ARANDELA METRICO
37	390734X1		2	WASHER METRIC	RONDELLE METR. RONDELLA METRICO	SCHEIBE METRISCH ARANDELA METRICO
38	3779389M1		1	GASKET	JOINT GUARNIZIONE	DICHTSCHEIBE EMPAQUETADURA.
39	3010933X1	M4X25	2	SCREW	VIS VITE	SCHRAUBE TORNILLO
40	***3782556M1***		1	SENSOR	DETECTEUR SENSORE	SENSOR. DETECTOR
41	3782693M1		1	CHOCK	CALE PASSACAVO	UNTERLEG-KEIL CALZA
42	3782555M3		1	PROTECTOR	PROTECTEUR PROTETTORE	SCHUTZ PROTECTOR
43	339102X1		2	WASHER METRIC	RONDELLE METR. RONDELLA METRICO	SCHEIBE METRISCH ARANDELA METRICO
44	3019139X1		3	NUT	ECROU DADO	MUTTER TUERCA
45	353431X1	➡| J021015	1	NUT UNF	ECROU UNF DADO UNF	MUTTER UNF TUERCA UNF
46	3783135M1	➡ H285031	1	COWL	GARANT CAPPOTTATURA	AUFSATZ CAPERUZA
47	391039X1	➡ H285031	2	WASHER METRIC	RONDELLE METR. RONDELLA METRICO	SCHEIBE METRISCH ARANDELA METRICO
48	394367X1	➡ H285031	2	LOCKNUT	ECROU BLOCAGE AUTOBLOCCANTE	FLACHMUTTER CONTRATUERCA

Shift Lever
Leviers De Vitesse
Schalthebel
Leva Cambio
Palanca De Cambio

25-120

With Dynashift
Avec Dynashift
Mit Dynashift
Con Dynashift
Con Dynashift

1-ZE93-002-B

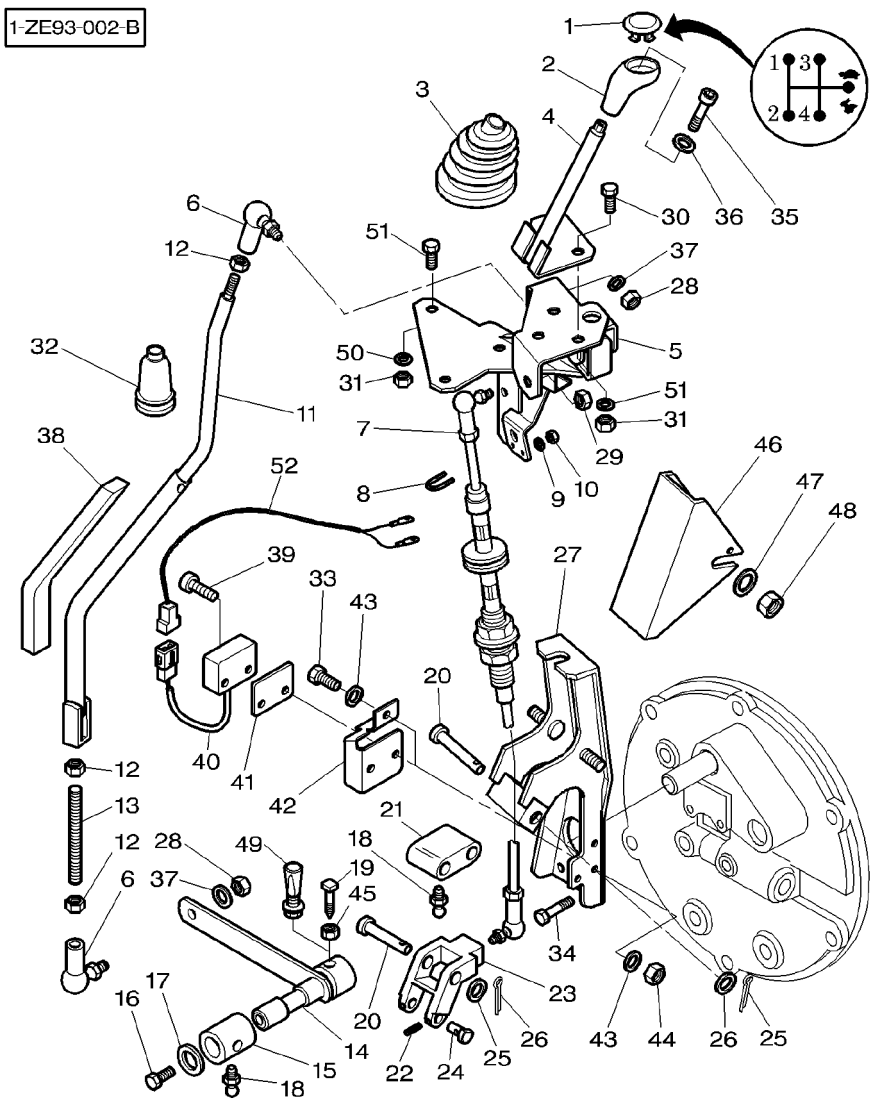

49	3783464M1	➡	J021016	**1**	KEY	CLAVETTE CHIAVETTA PASSKEIL CLAVE
50	390972X1			**X**	WASHER METRIC	RONDELLE METR. RONDELLA METRICO SCHEIBE METRISCH ARANDELA METRICO
51	339761X1		M8X25	**3**	SCREW METRIC	VIS METRIQUE VITE METRICA SCHRAUBE METR TORNILLO METRICO
52	3782538M1	◀▶	3000MM	**1**	HARNESS	FAISCEAU FASCIOCAVI KABELBAUM MAZO CABLES

Shift Lever	**Platform**	**25-125**
Leviers De Vitesses	**Plateforme**	
Schalthebel	**Plattform**	
Leva Cambio	**Piattaforma**	
Palanca De Cambio De Velocidades	**Plataforma**	

1-ZF69-002-A

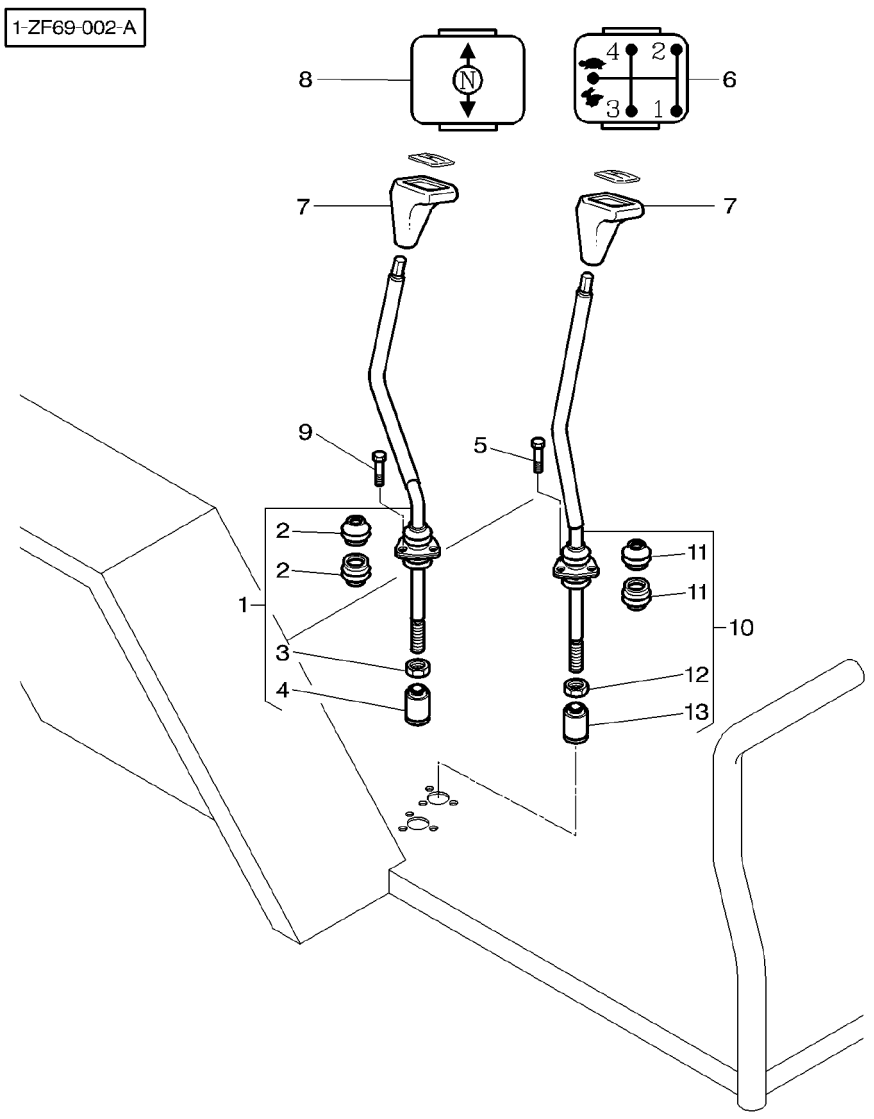

1	3713807M91		**1**	LEVER	LEVIER LEVA	HEBEL PALANCA
2	3389506M1	1	**2**	BELLOWS	SOUFFLET SOFFIETTO	FALTENBALG FUELLE
3	339592X1	1	**1**	NUT METRIC	ECROU METRIQUE DADO METRICO	MUTTER METRISCH TUERCA METRICO
4	3388603M1	1	**1**	GUIDE	GUIDE GUIDA	FUEHRUNG GUIA
5	339124X1	M8X16	**3**	SCREW METRIC	VIS METRIQUE VITE METRICA	SCHRAUBE METR TORNILLO METRICO
6	3388837M1	NOIR/BLACK	**1**	NOTE PLATE	PLAQUE INSTRUCT TARGHETTA	HINWEISSCHILD PLACA DE AVISO
6	3779652M1	(US) ORANGE	**1**	NOTE PLATE	PLAQUE INSTRUCT TARGHETTA	HINWEISSCHILD PLACA DE AVISO
7	3387626M2		**2**	KNOB	POMMEAU POMELLO	KNOPF POMO
8	3778985M1	NOIR/BLACK	**1**	NOTE PLATE	PLAQUE INSTRUCT TARGHETTA	HINWEISSCHILD PLACA DE AVISO
8	3779651M1	(US) ORANGE	**1**	NOTE PLATE	PLAQUE INSTRUCT TARGHETTA	HINWEISSCHILD PLACA DE AVISO
9	339124X1	M8X16	**3**	SCREW METRIC	VIS METRIQUE VITE METRICA	SCHRAUBE METR TORNILLO METRICO
10	3783204M1		**1**	LEVER	LEVIER LEVA	HEBEL PALANCA
11	3389506M1	10	**2**	BELLOWS	SOUFFLET SOFFIETTO	FALTENBALG FUELLE
12	339592X1	10	**1**	NUT METRIC	ECROU METRIQUE DADO METRICO	MUTTER METRISCH TUERCA METRICO
13	3388603M1	10	**1**	GUIDE	GUIDE GUIDA	FUEHRUNG GUIA

Control Armrest
Accoudoir De Commande
Schaltung Armlehne
Bracciolo Di Comando
Reposa Brazos De Control

25-130

With Dynashift
Avec Dynashift
Mit Dynashift
Con Dynashift
Con Dynashift

1-ZF84-001-C

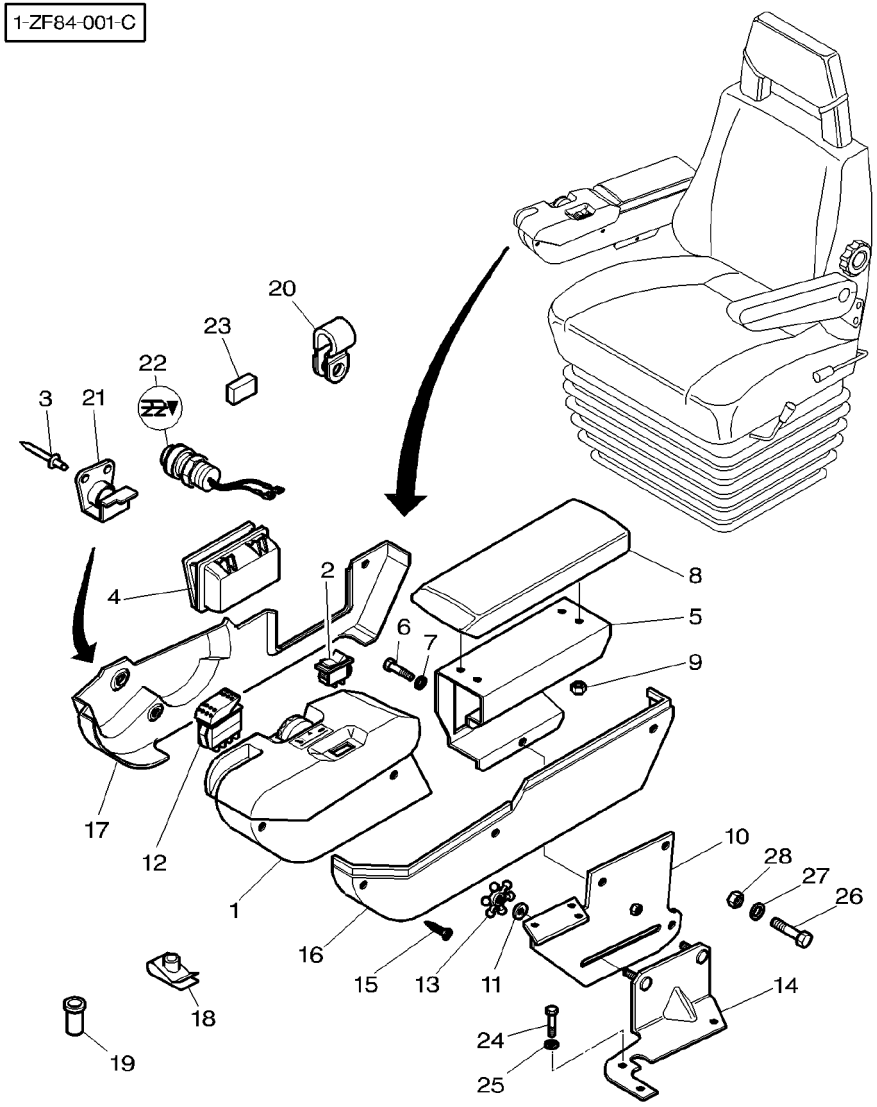

1	3782015M92	25−135 No	1	PLATE CONTROL	PLATINE DE CDE PIASTRA APPOGIO	KLEMMPLATTE. PLACA DE ABRAZO.
2	***3782108M1***		1	SWITCH,INDIRECT	CONTACTEUR INTERRUTTORE IND	KONTAKTSCHALTER CONTACTOR
2	***3780077M2***		1	SWITCH,INDIRECT	CONTACTEUR INTERRUTTORE IND	KONTAKTSCHALTER CONTACTOR
3	391349X1	∅ 3,2 X7,5MM J102023	2	RIVET	RIVET RIVETTO	NIET REMACHE
4	3712912M1		1	ASHTRAY	CENDRIER PORTACENERE	ASCHENBECHER CENICERO
5	3778674M2		1	SUPPORT	SUPPORT SUPPORTO	LAGERUNG DISPOS.DE SOSTEN
6	391074X1	M6x12	3	SCREW METRIC	VIS METRIQUE VITE METRICA	SCHRAUBE METR TORNILLO METRICO
7	390971X1		3	WASHER METRIC	RONDELLE METR. RONDELLA METRICO	SCHEIBE METRISCH ARANDELA METRICO
8	3778521M1		1	ARMREST	ACCOUDOIR BRACCIOLO	ARMLEHNE REPOSA BRAZOS
9	1441500X1	M6	4	LOCKNUT	ECROU BLOCAGE AUTOBLOCCANTE	FLACHMUTTER CONTRATUERCA
10	3778747M1	H340002	1	PLATE	PLAQUE PIASTRA	PLATTE PLATO
10	3783660M1	H340003	1	PLATE	PLAQUE PIASTRA	PLATTE PLATO
11	3778519M1		2	WASHER	RONDELLE RONDELLA	UNTERLEGSCHEIBE ARANDELA
12	3782020M2		1	BUTTON	BOUTON PULSANTE	KNOPFTASTE PULSADOR
13	3778520M1		2	BUTTON	BOUTON PULSANTE	KNOPFTASTE PULSADOR
14	3778517M1		1	ANGLE	EQUERRE ANGOLO	WINKEL ANGULO
15	3010578X1		7	SCREW	VIS VITE	SCHRAUBE TORNILLO
16	3778528M2		1	FLANGE	FLASQUE FLANGIA	FLANSCH PLETINA
17	3782019M2	J102023	1	FLANGE	FLASQUE FLANGIA	FLANSCH PLETINA
17	3784095M1	J102024	1	FLANGE	FLASQUE FLANGIA	FLANSCH PLETINA
18	3715142M1	M5	2	NUT	ECROU DADO	MUTTER TUERCA
19	3778672M1	M5	3	NUT	ECROU DADO	MUTTER TUERCA
20	3779547M1	∅ 10−12 MM	1	CLAMP	COLLIER FASCETTA	HALTESCHELLE ABRAZADERA
21	3782022M3	J102023	1	SUPPORT	SUPPORT SUPPORTO	LAGERUNG DISPOS.DE SOSTEN
22	3783772M1	J102024	1	SWITCH,INDIRECT	CONTACTEUR INTERRUTTORE IND	KONTAKTSCHALTER CONTACTOR
23	3782023M1	J102023	1	CHOCK	CALE PASSACAVO	UNTERLEG−KEIL CALZA

Control Armrest
Accoudoir De Commande
Schaltung Armlehne
Bracciolo Di Comando
Reposa Brazos De Control

25-130

With Dynashift
Avec Dynashift
Mit Dynashift
Con Dynashift
Con Dynashift

1-ZF84-001-C

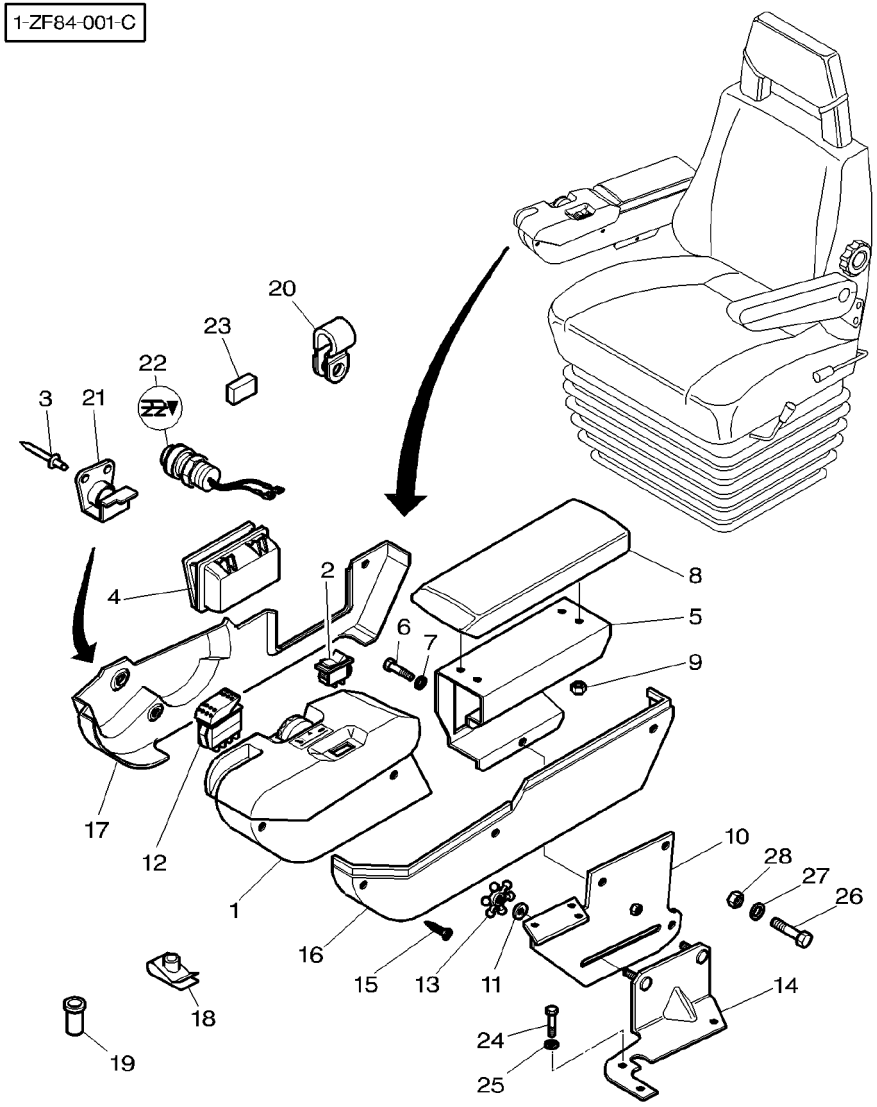

24	339228X1	M8X12	**3**	SCREW METRIC	VIS METRIQUE VITE METRICA	SCHRAUBE METR TORNILLO METRICO
25	390972X1		**3**	WASHER METRIC	RONDELLE METR. RONDELLA METRICO	SCHEIBE METRISCH ARANDELA METRICO
26	3009494X1	➡ H340003 M10X35	**1**	SCREW METRIC	VIS METRIQUE VITE METRICA	SCHRAUBE METR TORNILLO METRICO
27	**3619096M1**	➡ H340003	**2**	WASHER	RONDELLE RONDELLA	UNTERLEGSCHEIBE ARANDELA
28	3009693X1	➡ H340003	**1**	NUT METRIC	ECROU METRIQUE DADO METRICO	MUTTER METRISCH TUERCA METRICO

Control Armrest
Accoudoir De Commande
Schaltung Armlehne
Bracciolo Di Comando
Reposa Brazos De Control

25-135

1-ZF84-002-B

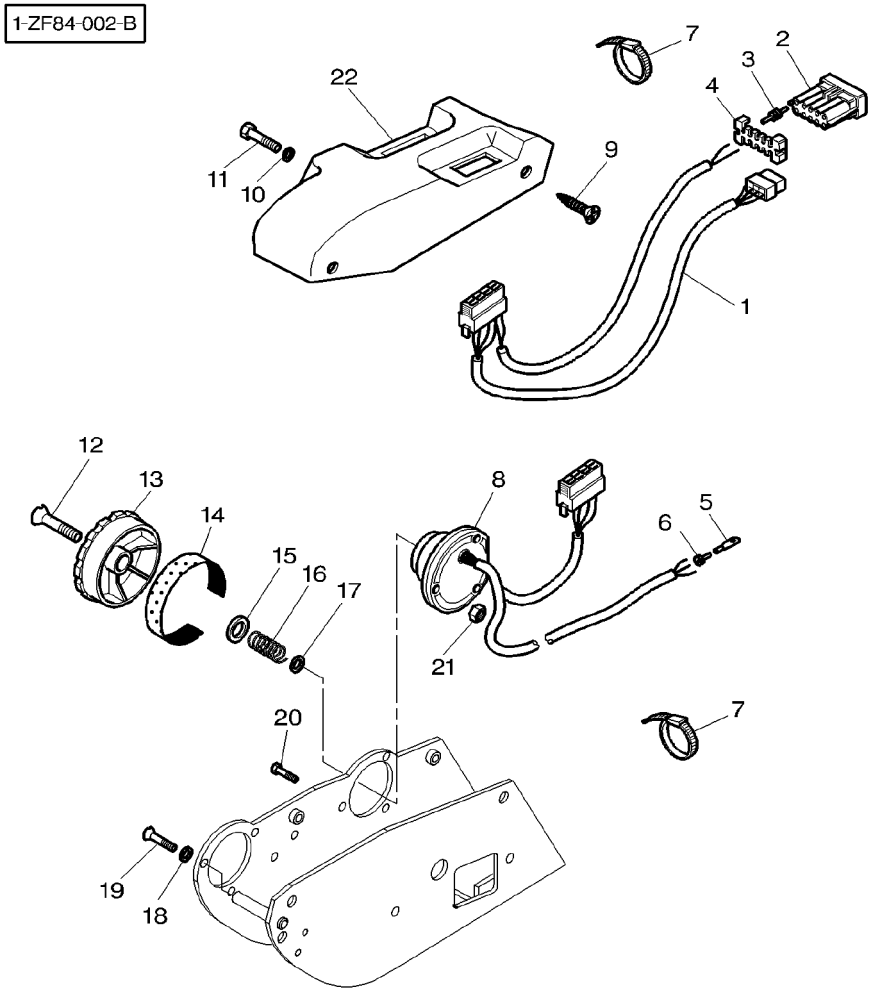

1	3903311M91		**1**	HARNESS	FAISCEAU FASCIOCAVI	KABELBAUM MAZO CABLES
2	3902943M1	NOIR − BLACK	**1**	CONNECTORS	CONNECTEUR MORSETTI	K.VERBINDER CONECTADORES
3	3902940M1		**4**	PLASTIC PLUG	BOUCHON PLASTIQU PLASTIC PLUG	PLASTIKSTOPFEN PLASTIC PLUG
4	3902941M1		**1**	CONNECTORS	CONNECTEUR MORSETTI	K.VERBINDER CONECTADORES
5	3902843M1		**9**	CONNECTORS	CONNECTEUR MORSETTI	K.VERBINDER CONECTADORES
6	3902842M1	ROUGE − RED	**9**	GROMMET	PASSE FIL GOMMINO	GUMMITUELLE PASACABLE
7	3902829M1		**X**	TIE	ATTACHE TRAVERSA ATTACCO	KUPPL.STANGE BARRA DE ENLACE
8	***3903312M91***		**1**	POTENTIOMETER	POTENTIOMETRE POTENZIOMETRO	POTENTIOMETER REGULADOR ELECT.
9	3004566X1	M6x16	**2**	SCREW	VIS VITE	SCHRAUBE TORNILLO
10	3902863M1	M6	**2**	WASHER	RONDELLE RONDELLA	UNTERLEGSCHEIBE ARANDELA
11	339560X1	M6x16	**2**	SCREW METRIC	VIS METRIQUE VITE METRICA	SCHRAUBE METR TORNILLO METRICO
12	3009674X1	M6x35	**1**	SCREW	VIS VITE	SCHRAUBE TORNILLO
13	3902836M1		**1**	BUTTON	BOUTON PULSANTE	KNOPFTASTE PULSADOR
14	3902826M1		**1**	DECAL	DECALCOMANIE DECALCOMANIA	AUFKLEBER CALCOMANIA
15	3902830M1		**1**	WASHER	RONDELLE RONDELLA	UNTERLEGSCHEIBE ARANDELA
16	3902832M1		**1**	SPRING	RESSORT MOLLA	FEDER MUELLE
17	3902833M1		**1**	SEAL	JOINT ETANCHEITE PARAOLIO	DICHTRING RETEN
18	339102X1		**2**	WASHER METRIC	RONDELLE METR. RONDELLA METRICO	SCHEIBE METRISCH ARANDELA METRICO
19	3008179X1	M4X10	**2**	SCREW METRIC	VIS METRIQUE VITE METRICA	SCHRAUBE METR TORNILLO METRICO
20	3009531X1	M4X12	**3**	SCREW METRIC	VIS METRIQUE VITE METRICA	SCHRAUBE METR TORNILLO METRICO
21	3019139X1	M4	**3**	NUT	ECROU DADO	MUTTER TUERCA
22	3903477M1		**1**	COVER	COUVERCLE COPERCHIO	DECKEL CUBIERTA

Control Armrest
Accoudoir De Commande
Schaltung Armlehne
Bracciolo Di Comando
Reposa Brazos De Control

25-140

With Full Powershift
Avec Full Powershift
Mit Full Powershift
Con Full Powershift
Con Full Powershift

1-ZF84-003-B

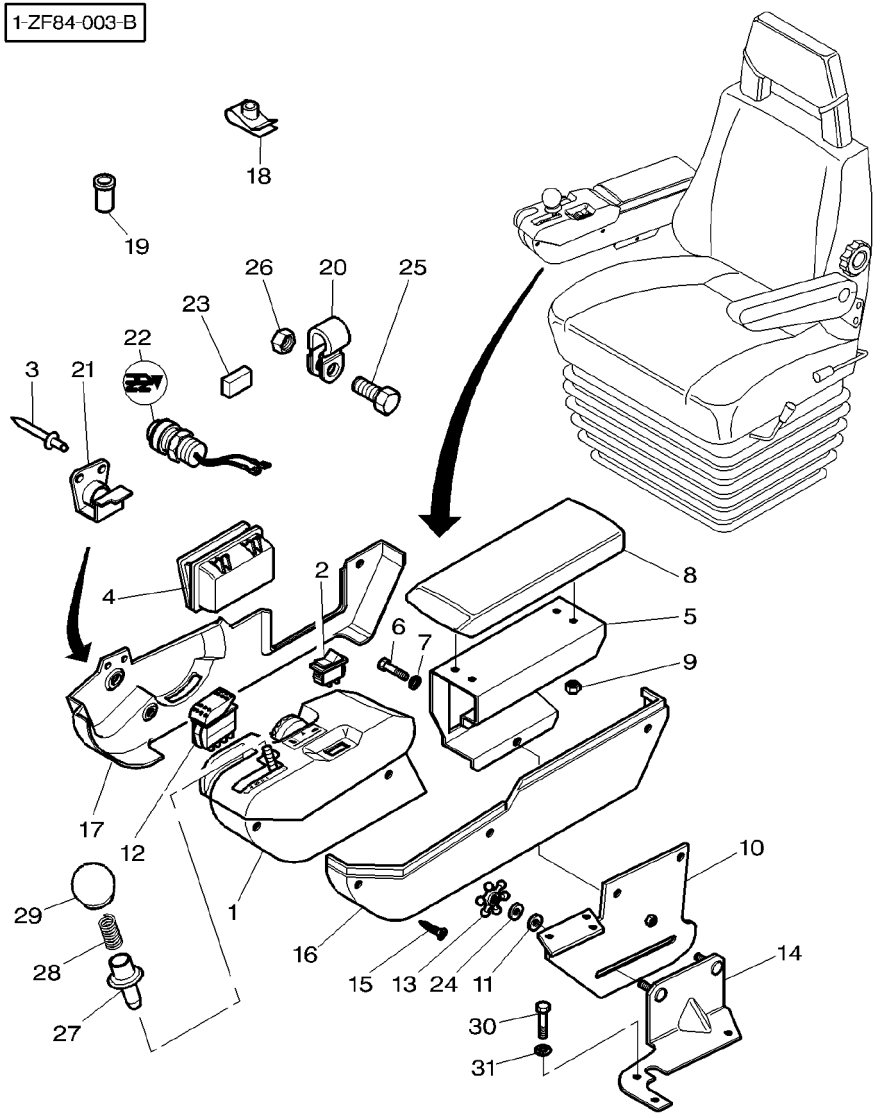

1	3782014M93	25−145 No	1	PLATE CONTROL	PLATINE DE CDE PIASTRA APPOGIO PLACA DE ABRAZO.	KLEMMPLATTE.
2	***3782108M1***		1	SWITCH,INDIRECT	CONTACTEUR INTERRUTTORE IND	KONTAKTSCHALTER CONTACTOR
2	***3780077M2***		1	SWITCH,INDIRECT	CONTACTEUR INTERRUTTORE IND	KONTAKTSCHALTER CONTACTOR
3	391349X1	∅ 3,2 X 7,5MM J102023	2	RIVET	RIVET RIVETTO	NIET REMACHE
4	3712912M1		1	ASHTRAY	CENDRIER PORTACENERE	ASCHENBECHER CENICERO
5	3778674M2		1	SUPPORT	SUPPORT SUPPORTO	LAGERUNG DISPOS.DE SOSTEN
6	391074X1	M6x12	3	SCREW METRIC	VIS METRIQUE VITE METRICA	SCHRAUBE METR TORNILLO METRICO
7	390971X1		3	WASHER METRIC	RONDELLE METR. RONDELLA METRICO	SCHEIBE METRISCH ARANDELA METRICO
8	3778521M1		1	ARMREST	ACCOUDOIR BRACCIOLO	ARMLEHNE REPOSA BRAZOS
9	1441500X1	∅ M6	4	LOCKNUT	ECROU BLOCAGE AUTOBLOCCANTE	FLACHMUTTER CONTRATUERCA
10	3778518M2	J025011	1	PLATE	PLAQUE PIASTRA	PLATTE PLATO
10	3783660M1	J025012	1	PLATE	PLAQUE PIASTRA	PLATTE PLATO
11	3778519M1		2	WASHER	RONDELLE RONDELLA	UNTERLEGSCHEIBE ARANDELA
12	3782020M2		1	BUTTON	BOUTON PULSANTE	KNOPFTASTE PULSADOR
13	3778520M1		2	BUTTON	BOUTON PULSANTE	KNOPFTASTE PULSADOR
14	3778517M1		1	ANGLE	EQUERRE ANGOLO	WINKEL ANGULO
15	3010578X1		7	SCREW	VIS VITE	SCHRAUBE TORNILLO
16	3778528M2		1	FLANGE	FLASQUE FLANGIA	FLANSCH PLETINA
17	3782019M2	J102023	1	FLANGE	FLASQUE FLANGIA	FLANSCH PLETINA
17	3784095M1	J102024	1	FLANGE	FLASQUE FLANGIA	FLANSCH PLETINA
18	3715142M1	∅ M5	2	NUT	ECROU DADO	MUTTER TUERCA
19	3778672M1	∅ M5	3	NUT	ECROU DADO	MUTTER TUERCA
20	3779547M1	∅ 10−12 MM	1	CLAMP	COLLIER FASCETTA	HALTESCHELLE ABRAZADERA
21	3782022M3	J102023	1	SUPPORT	SUPPORT SUPPORTO	LAGERUNG DISPOS.DE SOSTEN
22	3783772M1	J102024	1	SWITCH,INDIRECT	CONTACTEUR INTERRUTTORE IND	KONTAKTSCHALTER CONTACTOR
23	3782023M1	J102023	1	CHOCK	CALE PASSACAVO	UNTERLEG−KEIL CALZA

Control Armrest
Accoudoir De Commande
Schaltung Armlehne
Bracciolo Di Comando
Reposa Brazos De Control

25-140

With Full Powershift
Avec Full Powershift
Mit Full Powershift
Con Full Powershift
Con Full Powershift

1-ZF84-003-B

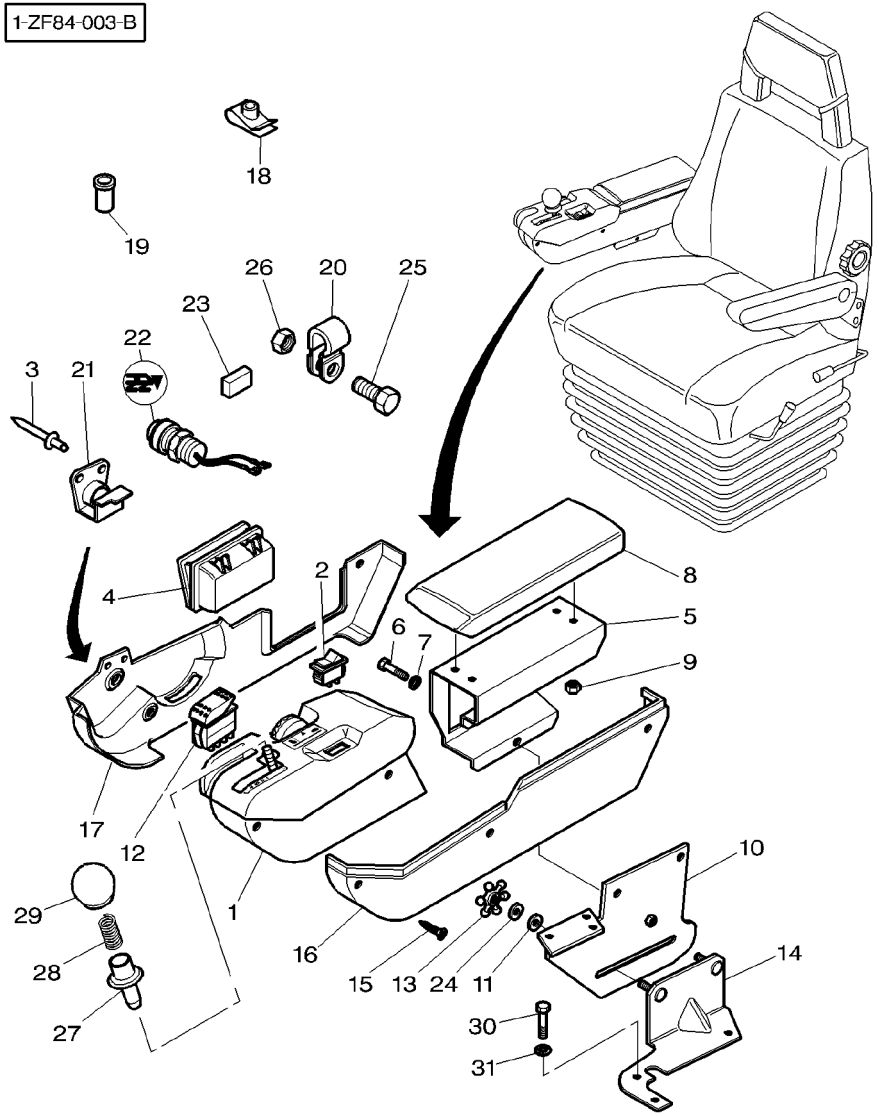

24	**3619096M1**		**2**	WASHER	RONDELLE RONDELLA	UNTERLEGSCHEIBE ARANDELA
25	3009494X1	M10X35	**1**	SCREW METRIC	VIS METRIQUE VITE METRICA	SCHRAUBE METR TORNILLO METRICO
26	3009693X1		**1**	NUT METRIC	ECROU METRIQUE DADO METRICO	MUTTER METRISCH TUERCA METRICO
27	3782951M2		**1**	LATCH	VERROU SALISCENDI	RIEGEL CERROJO
28	3783315M1		**1**	SPRING	RESSORT MOLLA	FEDER MUELLE
29	3782952M1		**1**	KNOB	POMMEAU POMELLO	KNOPF POMO
30	339228X1	M8X12	**3**	SCREW METRIC	VIS METRIQUE VITE METRICA	SCHRAUBE METR TORNILLO METRICO
31	390972X1		**3**	WASHER METRIC	RONDELLE METR. RONDELLA METRICO	SCHEIBE METRISCH ARANDELA METRICO

Controle Full Powershift
Commande Full Powershift
Powershift Full Bedienung
Commandi Full Powershift
Mando Full Powershift

25-145

1-ZF39-001-A

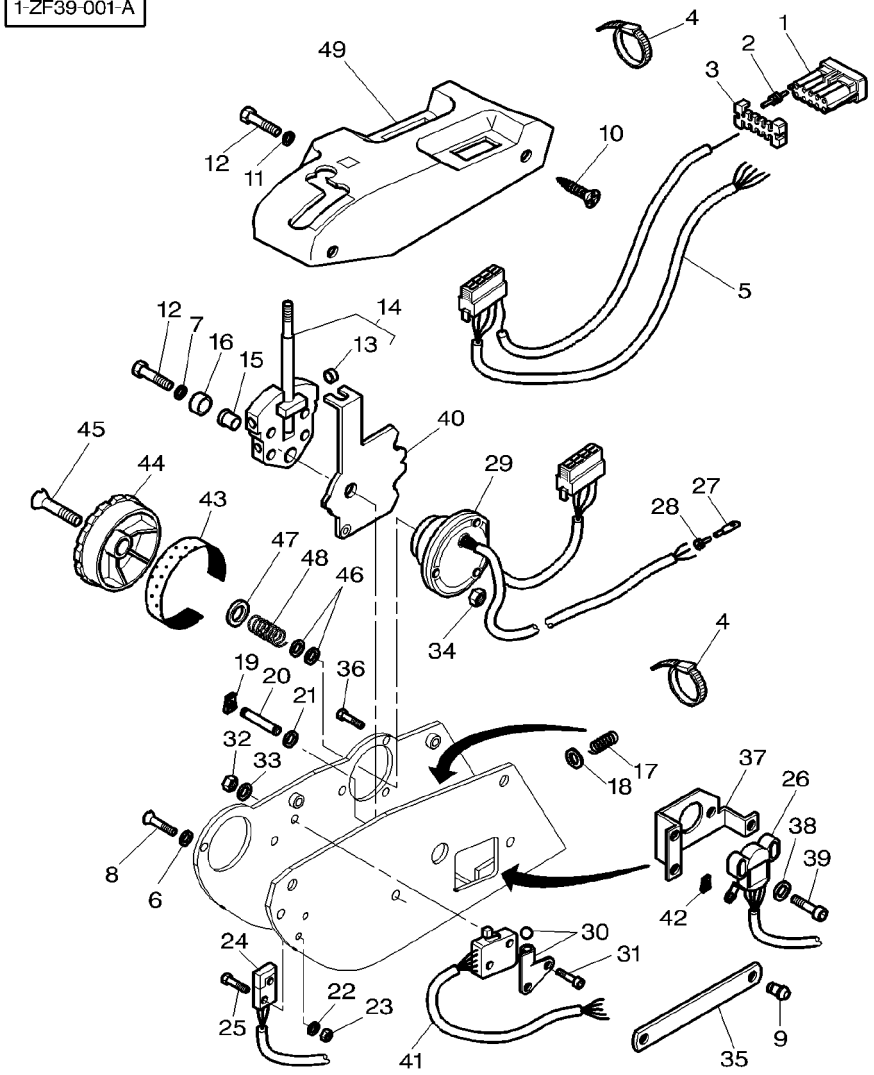

1	3902942M1	GREY	**1**	CONNECTORS	CONNECTEUR MORSETTI	K.VERBINDER CONECTADORES
1	3902943M1	BLACK	**1**	CONNECTORS	CONNECTEUR MORSETTI	K.VERBINDER CONECTADORES
2	3902940M1		**2**	PLASTIC PLUG	BOUCHON PLASTIQU PLASTIC PLUG	PLASTIKSTOPFEN PLASTIC PLUG
3	3902941M1		**2**	CONNECTORS	CONNECTEUR MORSETTI	K.VERBINDER CONECTADORES
4	3902829M1		**X**	TIE	ATTACHE TRAVERSA ATTACCO	KUPPL.STANGE BARRA DE ENLACE
5	3903445M91		**1**	CABLE	CABLE CAVO	KABEL CABLE
6	339102X1		**2**	WASHER METRIC	RONDELLE METR. RONDELLA METRICO	SCHEIBE METRISCH ARANDELA METRICO
7	1441206X1		**1**	LOCK WASHER	RONDELLE FREIN ROSETTA ELASTICA	FEDERRING ARANDELA GROWER
8	3008179X1	M4X10	**2**	SCREW METRIC	VIS METRIQUE VITE METRICA	SCHRAUBE METR TORNILLO METRICO
9	3903447M1		**1**	CLEVIS PIN	AXE PERNO D'ATTACCO	SPLINTBOLZEN BULON CILINDRICO
10	3004566X1	M6x16	**2**	SCREW	VIS VITE	SCHRAUBE TORNILLO
11	3902863M1	M6	**2**	WASHER	RONDELLE RONDELLA	UNTERLEGSCHEIBE ARANDELA
12	339560X1	M6x16	**3**	SCREW METRIC	VIS METRIQUE VITE METRICA	SCHRAUBE METR TORNILLO METRICO
13	3902863M1	14	**1**	WASHER	RONDELLE RONDELLA	UNTERLEGSCHEIBE ARANDELA
14	3903449M91		**1**	LEVER	LEVIER LEVA	HEBEL PALANCA
15	3902838M1		**1**	BEARING	COUSSINET CUSCINETTO	LAGER COJINETE
16	3902850M1		**1**	SPACER	ENTRETOISE DISTANZIALE	ABSTANDSTUECK PIEZA DISTANCIA
17	3902859M1		**1**	SPRING	RESSORT MOLLA	FEDER MUELLE
18	3902863M1		**1**	WASHER	RONDELLE RONDELLA	UNTERLEGSCHEIBE ARANDELA
19	3902944M1	∅ 6 MM	**2**	CLIP	CLIP FERMAGLIO	SCHELLE CRAPA RETEN
20	3902945M2		**1**	PIN	GOUPILLE PERNO	BOLZEN PASADOR
21	3902947M1		**1**	ROLLER	GALET RULLO	ROLLE RODILLO
22	3902866M1	M3	**2**	WASHER	RONDELLE RONDELLA	UNTERLEGSCHEIBE ARANDELA
23	3010599X1	M3	**2**	NUT METRIC	ECROU METRIQUE DADO METRICO	MUTTER METRISCH TUERCA METRICO
24	***3902860M1***		**1**	SWITCH,INDIRECT	CONTACTEUR INTERRUTTORE IND	KONTAKTSCHALTER CONTACTOR
25	1442829X1	M3x16	**2**	SCREW	VIS VITE	SCHRAUBE TORNILLO

Controle Full Powershift
Commande Full Powershift
Powershift Full Bedienung
Commandi Full Powershift
Mando Full Powershift

25-145

1-ZF39-001-A

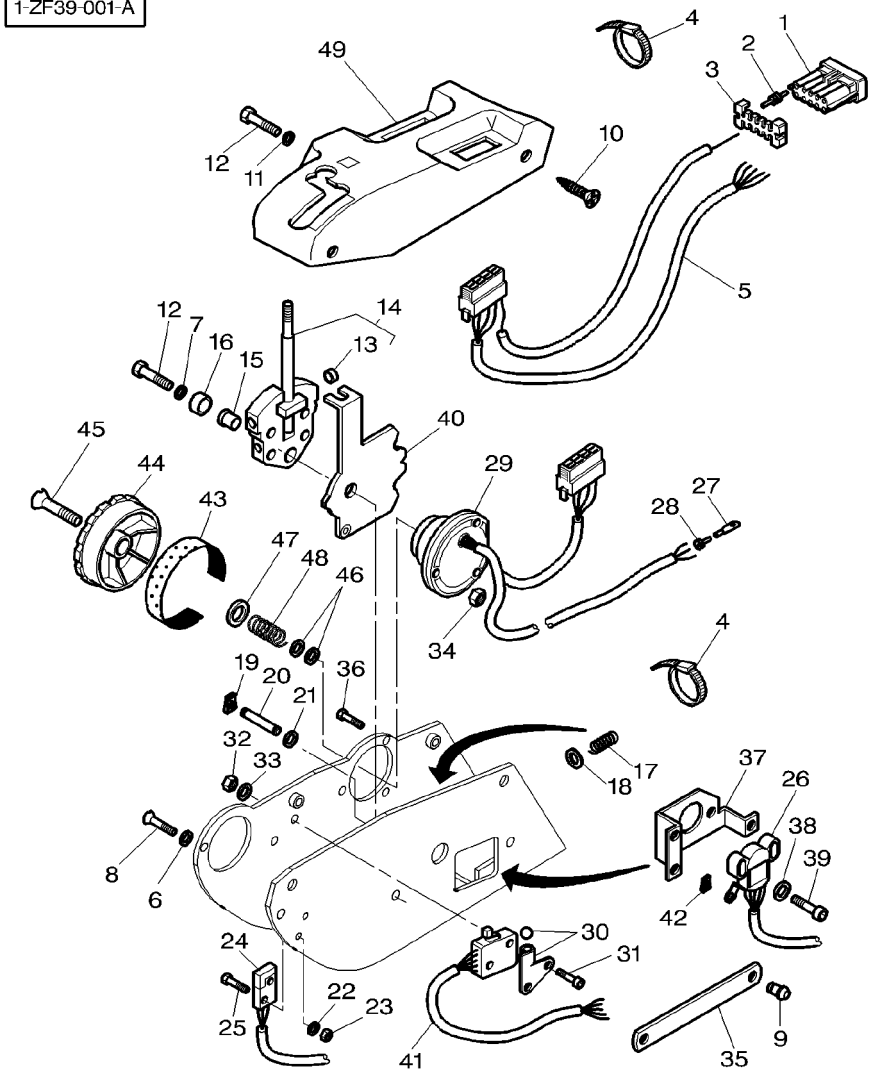

26	***3902946M91***		**1**	POTENTIOMETER	POTENTIOMETRE POTENZIOMETRO	POTENTIOMETER REGULADOR ELECT.
27	3902843M1		**4**	CONNECTORS	CONNECTEUR MORSETTI	K.VERBINDER CONECTADORES
28	3902842M1	RED	**4**	GROMMET	PASSE FIL GOMMINO	GUMMITUELLE PASACABLE
29	***3903312M91***		**1**	POTENTIOMETER	POTENTIOMETRE POTENZIOMETRO	POTENTIOMETER REGULADOR ELECT.
30	3902862M1		**1**	PLATE	PLAQUE PIASTRA	PLATTE PLATO
31	3903270M1	M3x16	**2**	SCREW	VIS VITE	SCHRAUBE TORNILLO
32	3010599X1	M3	**2**	NUT METRIC	ECROU METRIQUE DADO METRICO	MUTTER METRISCH TUERCA METRICO
33	3902866M1	M3	**2**	WASHER	RONDELLE RONDELLA	UNTERLEGSCHEIBE ARANDELA
34	3019139X1	M4	**3**	NUT	ECROU DADO	MUTTER TUERCA
35	3903448M1		**1**	CAM	CAME CAMMA	NOCKEN LEVA
36	3009531X1	M4x12	**3**	SCREW METRIC	VIS METRIQUE VITE METRICA	SCHRAUBE METR TORNILLO METRICO
37	3903446M91		**1**	SUPPORT	SUPPORT SUPPORTO	LAGERUNG DISPOS.DE SOSTEN
38	3903451M1		**2**	WASHER	RONDELLE RONDELLA	UNTERLEGSCHEIBE ARANDELA
39	3009534X1	M4X25	**2**	SCREW METRIC	VIS METRIQUE VITE METRICA	SCHRAUBE METR TORNILLO METRICO
40	3903450M91		**1**	LEVER	LEVIER LEVA	HEBEL PALANCA
41	3903199M91		**1**	HARNESS	FAISCEAU FASCIOCAVI	KABELBAUM MAZO CABLES
42	3902955M1	∅ 5 MM	**2**	CLIP	CLIP FERMAGLIO	SCHELLE CRAPA RETEN
43	3902826M1		**1**	DECAL	DECALCOMANIE DECALCOMANIA	AUFKLEBER CALCOMANIA
44	3902836M1		**1**	BUTTON	BOUTON PULSANTE	KNOPFTASTE PULSADOR
45	3009674X1	M6x35	**1**	SCREW	VIS VITE	SCHRAUBE TORNILLO
46	3902833M1		**1**	SEAL	JOINT ETANCHEITE PARAOLIO	DICHTRING RETEN
47	3902830M1		**1**	WASHER	RONDELLE RONDELLA	UNTERLEGSCHEIBE ARANDELA
48	3902832M1		**1**	SPRING	RESSORT MOLLA	FEDER MUELLE
49	3903476M1		**1**	COVER	COUVERCLE COPERCHIO	DECKEL CUBIERTA

Control Armrest
Accoudoir De Commande
Schaltung Armlehne
Bracciolo Di Comando
Reposa Brazos De Control

25-150

Without Electronic Lift With Full Powershift
Sans Relevage Electronique Avec Full Powershift
Ohne Electronische Kraftheber Mit Full Powershift
Senza Sollevamento Elettronico Con Full Powershift
Con Levante Electronico Con Full Powershift

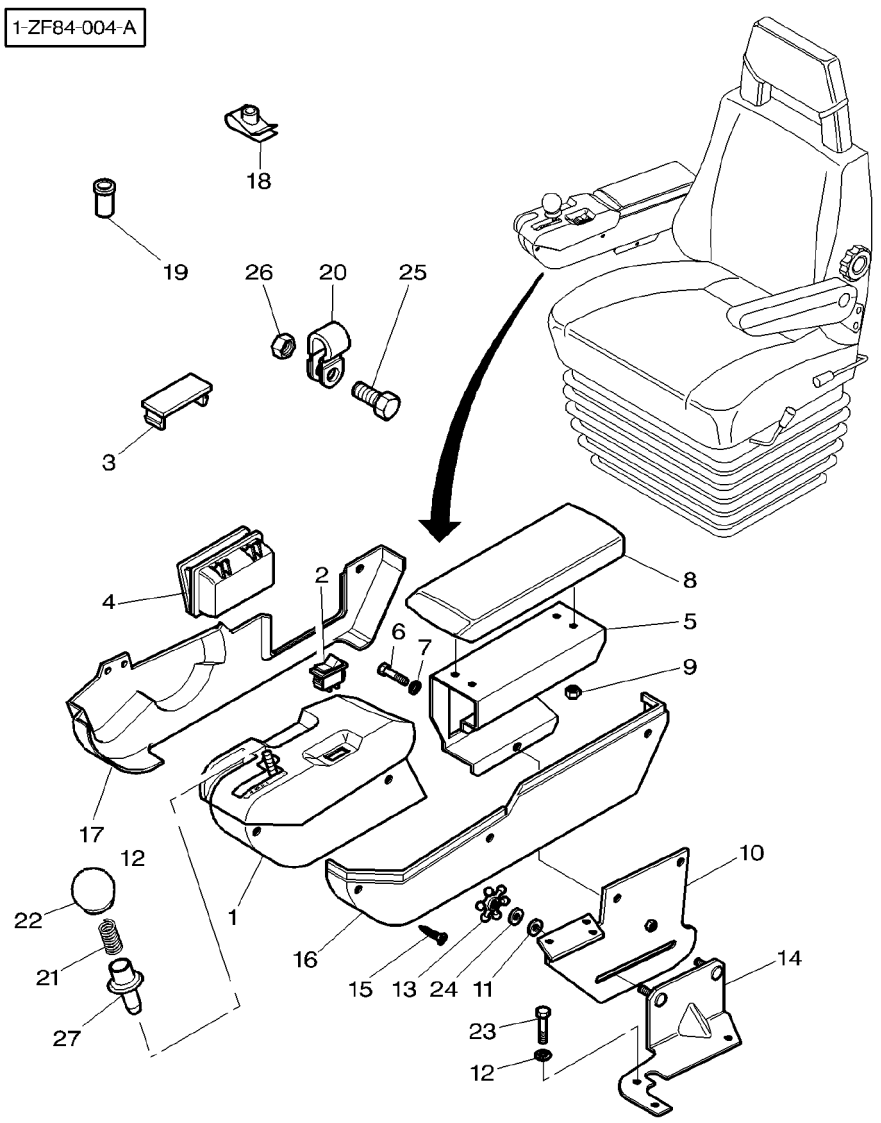

1	3782018M92	👁	25−155 No	**1**	PLATE CONTROL	PLATINE DE CDE PIASTRA APPOGIO
2	***3780077M2***			**1**	SWITCH,INDIRECT	KLEMMPLATTE. PLACA DE ABRAZO. KONTAKTSCHALTER CONTACTEUR INTERRUTTORE IND CONTACTOR
3	3713151M1			**2**	TAP	OBTURATEUR TAPPO*
4	3712912M1			**1**	ASHTRAY	HAHN GRIFO CENDRIER PORTACENERE
5	3778674M2			**1**	SUPPORT	ASCHENBECHER CENICERO SUPPORT SUPPORTO
6	391074X1		M6x12	**3**	SCREW METRIC	LAGERUNG DISPOS.DE SOSTEN VIS METRIQUE VITE METRICA
7	390971X1			**3**	WASHER METRIC	SCHRAUBE METR TORNILLO METRICO RONDELLE METR. RONDELLA METRICO
8	3778521M1			**1**	ARMREST	SCHEIBE METRISCH ARANDELA METRICO ACCOUDOIR BRACCIOLO
9	1441500X1		M6	**4**	LOCKNUT	ARMLEHNE REPOSA BRAZOS ECROU BLOCAGE AUTOBLOCCANTE
10	3778518M2	➡|	J025011	**1**	PLATE	FLACHMUTTER CONTRATUERCA PLAQUE PIASTRA
10	3783660M1	➡	J025012	**1**	PLATE	PLATTE PLATO PLAQUE PIASTRA
11	3778519M1			**2**	WASHER	PLATTE PLATO RONDELLE RONDELLA
12	390972X1			**3**	WASHER METRIC	UNTERLEGSCHEIBE ARANDELA RONDELLE METR. RONDELLA METRICO
13	3778520M1			**2**	BUTTON	SCHEIBE METRISCH ARANDELA METRICO BOUTON PULSANTE
14	3778517M1	➡|		**1**	ANGLE	KNOPFTASTE PULSADOR EQUERRE ANGOLO
15	3010578X1			**7**	SCREW	WINKEL ANGULO VIS VITE
16	3778528M2	◀		**1**	FLANGE	SCHRAUBE TORNILLO FLASQUE FLANGIA
17	3783015M1	▶		**1**	FLANGE	FLANSCH PLETINA FLASQUE FLANGIA
18	3715142M1		M5	**2**	NUT	FLANSCH PLETINA ECROU DADO
19	3778672M1		M5	**3**	NUT	MUTTER TUERCA ECROU DADO
20	3779547M1	∅	10−12 MM	**1**	CLAMP	MUTTER TUERCA COLLIER FASCETTA
21	3783315M1			**1**	SPRING	HALTESCHELLE ABRAZADERA RESSORT MOLLA
22	3782952M1			**1**	KNOB	FEDER MUELLE POMMEAU POMELLO
23	339228X1		M8X12	**3**	SCREW METRIC	KNOPF POMO VIS METRIQUE VITE METRICA
24	**3619096M1**			**2**	WASHER	SCHRAUBE METR TORNILLO METRICO RONDELLE RONDELLA
25	3009494X1		M10X35	**1**	SCREW METRIC	UNTERLEGSCHEIBE ARANDELA VIS METRIQUE VITE METRICA	SCHRAUBE METR TORNILLO METRICO

Control Armrest
Accoudoir De Commande
Schaltung Armlehne
Bracciolo Di Comando
Reposa Brazos De Control

25-150

Without Electronic Lift With Full Powershift
Sans Relevage Electronique Avec Full Powershift
Ohne Electronische Kraftheber Mit Full Powershift
Senza Sollevamento Elettronico Con Full Powershift
Con Levante Electronico Con Full Powershift

1-ZF84-004-A

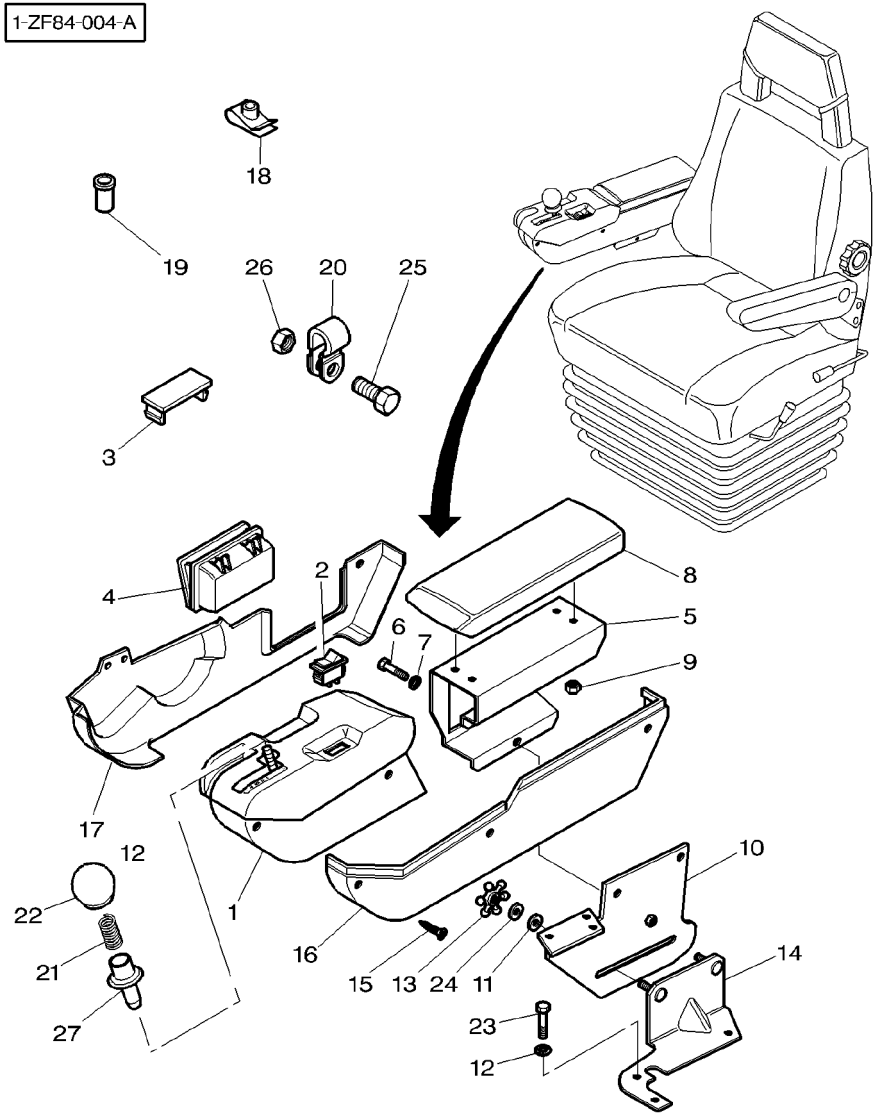

26	3009693X1	**1** NUT METRIC	ECROU METRIQUE DADO METRICO	MUTTER METRISCH TUERCA METRICO
27	3782951M2	**1** LATCH	VERROU SALISCENDI	RIEGEL CERROJO

Controle Full Powershift
Commande Full Powershift
Powershift Full Bedienung
Commandi Full Powershift
Mando Full Powershift

25-155

Without Electronic Lift
Sans Relevage Electronique
Ohne Electronische Kraftheber
Senza Sollevamento Elettronico
Con Levante Electronico

1-ZF39-002-A

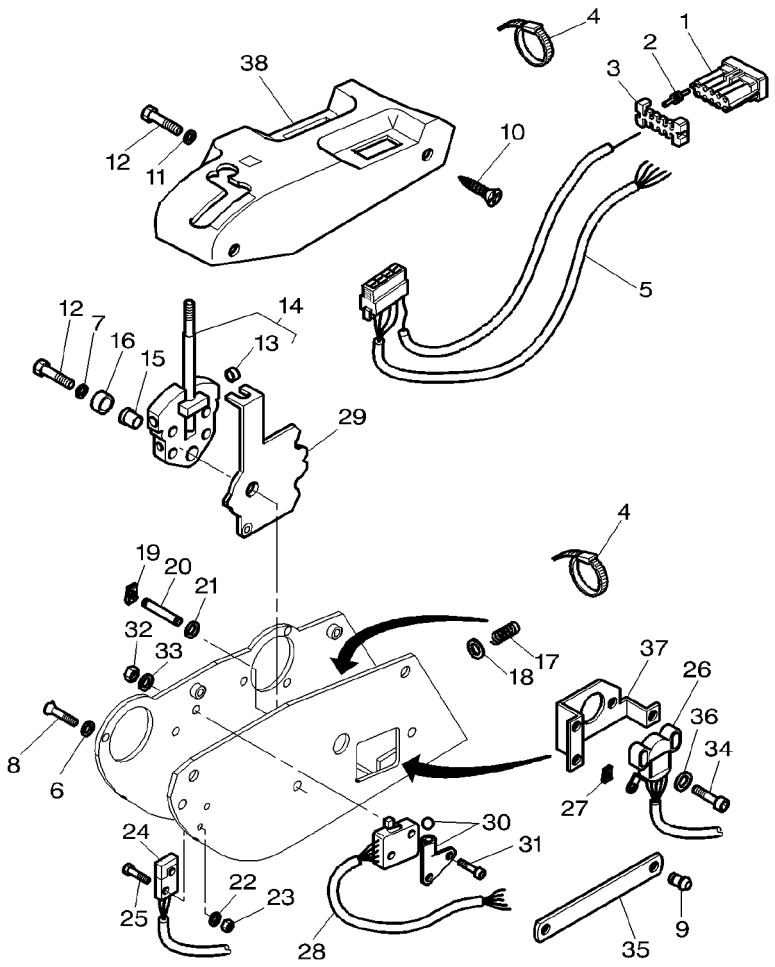

1	3902942M1	GREY	1	CONNECTORS	CONNECTEUR MORSETTI	K.VERBINDER CONECTADORES
1	3902943M1	BLACK	1	CONNECTORS	CONNECTEUR MORSETTI	K.VERBINDER CONECTADORES
2	3902940M1		X	PLASTIC PLUG	BOUCHON PLASTIQU PLASTIC PLUG	PLASTIKSTOPFEN PLASTIC PLUG
3	3902941M1		2	CONNECTORS	CONNECTEUR MORSETTI	K.VERBINDER CONECTADORES
4	3902829M1		X	TIE	ATTACHE TRAVERSA ATTACCO	KUPPL.STANGE BARRA DE ENLACE
5	3903445M91		1	CABLE	CABLE CAVO	KABEL CABLE
6	339102X1		2	WASHER METRIC	RONDELLE METR. RONDELLA METRICO	SCHEIBE METRISCH ARANDELA METRICO
7	1441206X1		1	LOCK WASHER	RONDELLE FREIN ROSETTA ELASTICA	FEDERRING ARANDELA GROWER
8	3008179X1	M4X10	2	SCREW METRIC	VIS METRIQUE VITE METRICA	SCHRAUBE METR TORNILLO METRICO
9	3903447M1		1	CLEVIS PIN	AXE PERNO D'ATTACCO	SPLINTBOLZEN BULON CILINDRICO
10	3004566X1	M6x16	2	SCREW	VIS VITE	SCHRAUBE TORNILLO
11	3902863M1	M6	2	WASHER	RONDELLE RONDELLA	UNTERLEGSCHEIBE ARANDELA
12	339560X1	M6x16	3	SCREW METRIC	VIS METRIQUE VITE METRICA	SCHRAUBE METR TORNILLO METRICO
13	3902863M1	14	1	WASHER	RONDELLE RONDELLA	UNTERLEGSCHEIBE ARANDELA
14	3903449M91		1	LEVER	LEVIER LEVA	HEBEL PALANCA
15	3902838M1		1	BEARING	COUSSINET CUSCINETTO	LAGER COJINETE
16	3902850M1		1	SPACER	ENTRETOISE DISTANZIALE	ABSTANDSTUECK PIEZA DISTANCIA
17	3902859M1		1	SPRING	RESSORT MOLLA	FEDER MUELLE
18	3902863M1		1	WASHER	RONDELLE RONDELLA	UNTERLEGSCHEIBE ARANDELA
19	3902944M1	∅ 6 MM	2	CLIP	CLIP FERMAGLIO	SCHELLE CRAPA RETEN
20	3902945M2		1	PIN	GOUPILLE PERNO	BOLZEN PASADOR
21	3902947M1		1	ROLLER	GALET RULLO	ROLLE RODILLO
22	3902866M1	M3	2	WASHER	RONDELLE RONDELLA	UNTERLEGSCHEIBE ARANDELA
23	3010599X1	M3	2	NUT METRIC	ECROU METRIQUE DADO METRICO	MUTTER METRISCH TUERCA METRICO
24	***3902860M1***		1	SWITCH,INDIRECT	CONTACTEUR INTERRUTTORE IND	KONTAKTSCHALTER CONTACTOR
25	1442829X1	M3x16	2	SCREW	VIS VITE	SCHRAUBE TORNILLO

Controle Full Powershift
Commande Full Powershift
Powershift Full Bedienung
Commandi Full Powershift
Mando Full Powershift

25-155

Without Electronic Lift
Sans Relevage Electronique
Ohne Electronische Kraftheber
Senza Sollevamento Elettronico
Con Levante Electronico

1-ZF39-002-A

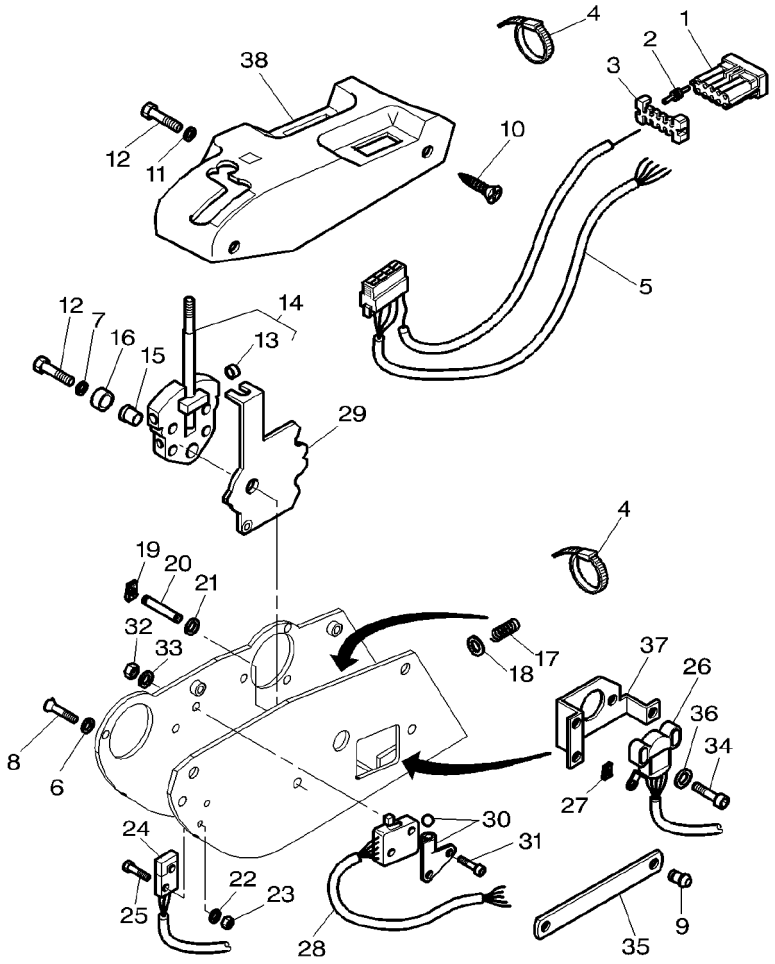

26	***3902946M91***		**1**	POTENTIOMETER	POTENTIOMETRE POTENZIOMETRO	POTENTIOMETER REGULADOR ELECT.
27	3902955M1	∅ 5 MM	**2**	CLIP	CLIP FERMAGLIO	SCHELLE CRAPA RETEN
28	3903199M91		**1**	HARNESS	FAISCEAU FASCIOCAVI	KABELBAUM MAZO CABLES
29	3903450M91		**1**	LEVER	LEVIER LEVA	HEBEL PALANCA
30	3902862M1		**1**	PLATE	PLAQUE PIASTRA	PLATTE PLATO
31	3903270M1	M3x16	**2**	SCREW	VIS VITE	SCHRAUBE TORNILLO
32	3010599X1	M3	**2**	NUT METRIC	ECROU METRIQUE DADO METRICO	MUTTER METRISCH TUERCA METRICO
33	3902866M1	M3	**2**	WASHER	RONDELLE RONDELLA	UNTERLEGSCHEIBE ARANDELA
34	3009534X1	M4X25	**2**	SCREW METRIC	VIS METRIQUE VITE METRICA	SCHRAUBE METR TORNILLO METRICO
35	3903448M1		**1**	CAM	CAME CAMMA	NOCKEN LEVA
36	3903451M1		**2**	WASHER	RONDELLE RONDELLA	UNTERLEGSCHEIBE ARANDELA
37	3903446M91		**1**	SUPPORT	SUPPORT SUPPORTO	LAGERUNG DISPOS.DE SOSTEN
38	3903475M1		**1**	COVER	COUVERCLE COPERCHIO	DECKEL CUBIERTA

Gear Box Full Power Shift
Boite De Vitesses Full Power Shift
Getriebe Full Power Shift
Trasmissione Full Power Shift
Caja Del Velocidades Full Power Shift

25-160

1-ZF60-001-A

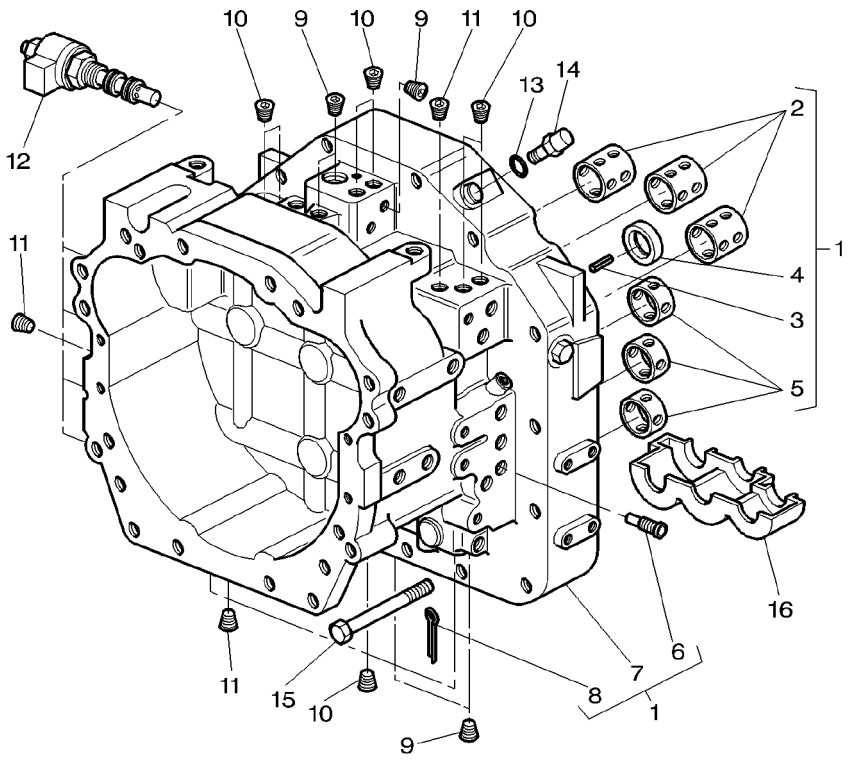

1	3779281M91		
2	3779206M1	1	
3	3779215M1	1	
4	3779208M1	1	
5	3779207M1	1	
6	***3779283M91***	1	
7	3779279M1	1	
8	3779224M1	1	
9	3779308M1		
10	3779242M1	∅ 7/16"	
11	3779234M1	∅ 9/16"	
12	***3779284M91***		
13	3779222M1		
14	***3779280M1***	[A]	
15	3779218M1	M16X140	
16	3779265M1		

[A] MIDDLEMAN SPEED
VITESSE INTERMEDIAIRE
GESCHWINDIGKEIT VERMITTLER
VELOCITA INTERMEDIARIO
VELOCIDAD INTERMEDIARIO

1	HOUSING	CARTER	GEHAEUSE
		CARCASSA	ALOJAMIENTO
3	BUSH	BAGUE	BUCHSE
		BOCCOLA	CASQUILLO
1	PLUG	BOUCHON	VERSCHL.STOPFEN
		TAPPO	TAPON
1	GASKET	JOINT	DICHTSCHEIBE
		GUARNIZIONE	EMPAQUETADURA.
3	BUSH	BAGUE	BUCHSE
		BOCCOLA	CASQUILLO
1	PRESSURE VALVE	VALVE	DRUCKVENTIL
		VALVOLA PRESSION	VALVULA PRESION
1	HOUSING	CARTER	GEHAEUSE
		CARCASSA	ALOJAMIENTO
1	PIN	GOUPILLE	BOLZEN
		PERNO	PASADOR
5	PLUG	BOUCHON	VERSCHL.STOPFEN
		TAPPO	TAPON
10	PLUG	BOUCHON	VERSCHL.STOPFEN
		TAPPO	TAPON
3	PLUG	BOUCHON	VERSCHL.STOPFEN
		TAPPO	TAPON
4	SOLENOID	SOLENOIDE	MAGNETSPULE
		SOLENOIDE	SOLENOIDE
1	O RING	JOINT TORIQUE	O-RING
		ANELLO OR	JUNTA TORICA
1	ENG.SPEED SENSOR	CAPTEUR VIT MOT	SENSOR MOTORDREH
		SENSORE GIRIMOTO	SENSOR VEL.MOTOR
18	SCREW	VIS	SCHRAUBE
		VITE	TORNILLO
1	MANIFOLD	COLLECTEUR	KRUEMMER
		COLLETTORE	MULTIPLE

Gear Box Full Power Shift
Boite De Vitesses Full Power Shift
Getriebe Full Power Shift
Trasmissione Full Power Shift
Caja Del Velocidades Full Power Shift

25-165

1-ZF60-003-A

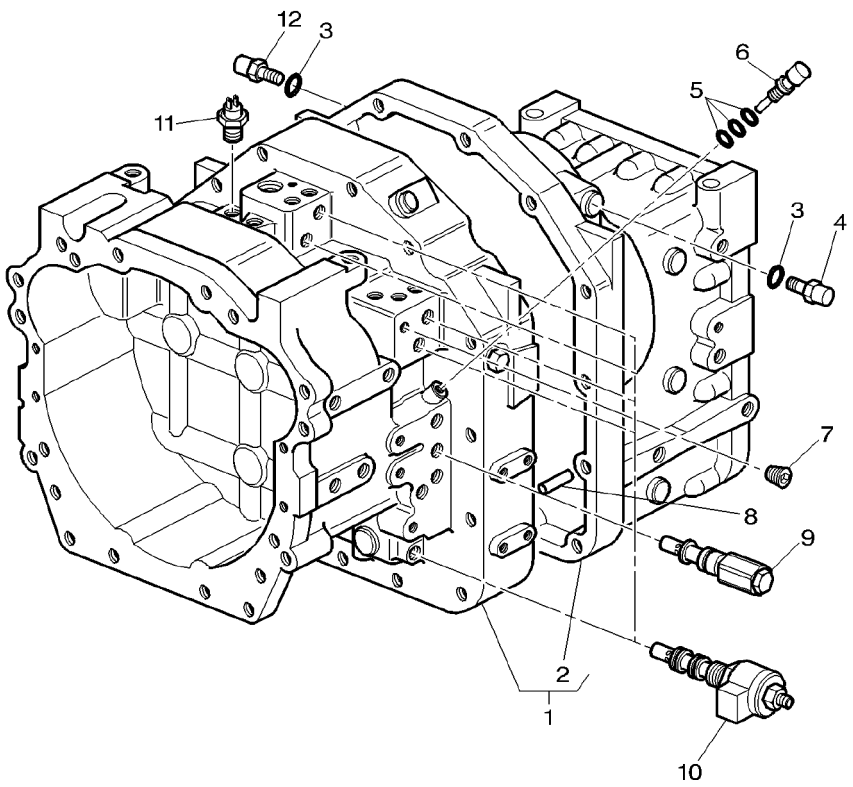

1	3716348M91		
2	3779278M1	1	
3	3779222M1		
4	***3779280M1***	[A]	
5	3779235M1		
6	***3779237M1***	[B]	
7	3779234M1	∅	9/16"
8	3779225M1		
9	***3779244M91***	260 PSI	
10	***3779284M91***		
11	***3381387M4***		
12	***3779280M1***	[C]	

[A] MOTOR SPEED
VITESSE MOTEUR
GESCHWINDIGKEITMOTOR
VELOCITA MOTORE
VELOCIDAD MOTOR

[B] HEAT
TEMPERATURE
WARME
CALORE
CALOR

[C] TRAVELLING SPEED
VITESSE D'AVANCEMENT
FAHRGESCHWINDIGKEIT
VELOCITA D'AVANZAMENTO
VELOCDAD DE AVANCE

1	GEARBOX	BOITE VITESSES CAMBIO VELOCITA	ZAHNRADGETRIEBE CAJA CAMBIO
1	HOUSING	CARTER CARCASSA	GEHAEUSE ALOJAMIENTO
2	O RING	JOINT TORIQUE ANELLO OR	O-RING JUNTA TORICA
1	ENG.SPEED SENSOR	CAPTEUR VIT MOT SENSORE GIRIMOTO	SENSOR MOTORDREH SENSOR VEL.MOTOR
1	KIT, O RINGS	JEU JOINT TORIQU KIT,ANELLI"O"	O-RINGSATZ JUEGO,ANILLOS'O'
1	TRANSMITTER	TRANSMETTEUR TRASMETTITORE	UEBERTRAGER TRANSMISOR
1	PLUG	BOUCHON TAPPO	VERSCHL.STOPFEN TAPON
2	LOCATOR	PION DE CENTRAGE LOCALIZZATORE	ARRETIERUNG INDIC POSICION
1	RELIEF VALVE	VALVE SECURITE VALVOLA LIMITATR	UEBERDR.VENTIL VALV.DESCARG
5	SOLENOID	SOLENOIDE SOLENOIDE	MAGNETSPULE SOLENOIDE
1	LOW PR.OIL TRMTR	TR HUILE BASSEPR SENSORE PRESS.	DRUCKSCHNIEDERDR TRANS.ACEITE BP
1	ENG.SPEED SENSOR	CAPTEUR VIT MOT SENSORE GIRIMOTO	SENSOR MOTORDREH SENSOR VEL.MOTOR

Gear Box Full Power Shift
Boite De Vitesses Full Power Shift
Getriebe Full Power Shift
Trasmissione Full Power Shift
Caja Del Velocidades Full Power Shift

25-170

1-ZF60-005-A

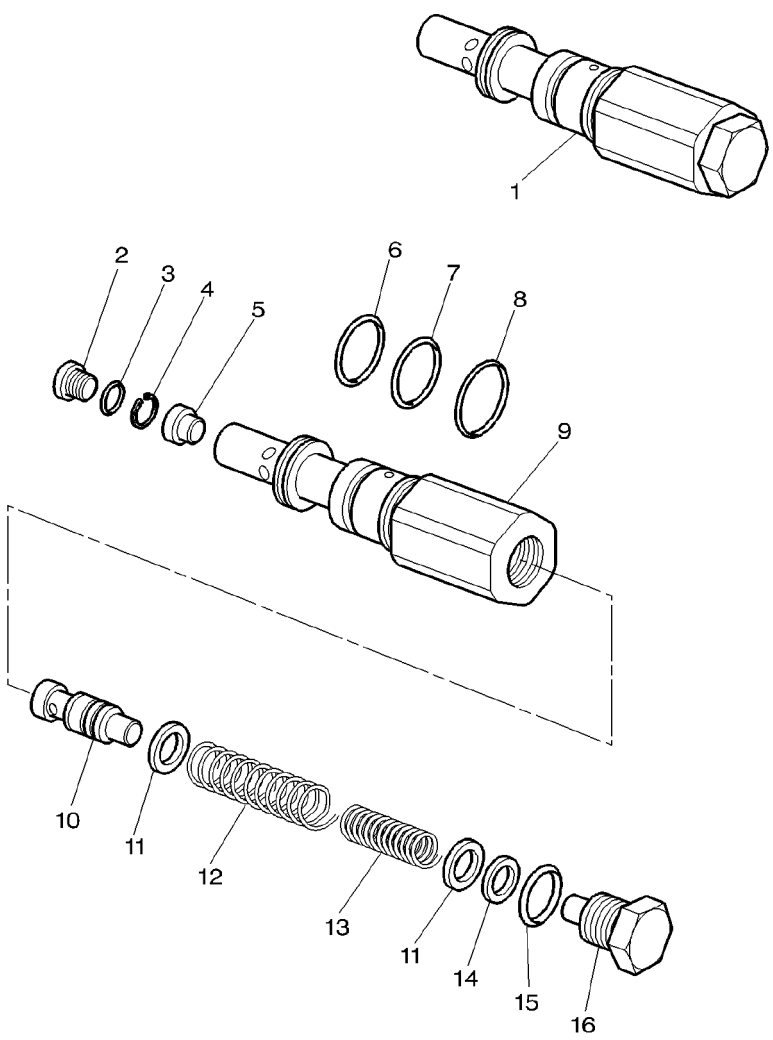

1	***3779244M91***	260 PSI	**1**	RELIEF VALVE	VALVE SECURITE VALVOLA LIMITATR	UEBERDR.VENTIL VALV.DESCARG
2	3779308M1	1	**1**	PLUG	BOUCHON TAPPO	VERSCHL.STOPFEN TAPON
3	3779307M1	1	**1**	O RING	JOINT TORIQUE ANELLO OR	O-RING JUNTA TORICA
4	3779306M1	1	**1**	CIRCLIP	SEGMENT D ARRET ANELLO D'ARRESTO	SICHERUNGSRING CIRCULITO
5	3779305M1	1	**1**	COVER	COUVERCLE COPERCHIO	DECKEL CUBIERTA
6	3779315M1	1	**1**	O RING	JOINT TORIQUE ANELLO OR	O-RING JUNTA TORICA
7	3779316M1	1	**1**	O RING	JOINT TORIQUE ANELLO OR	O-RING JUNTA TORICA
8	3779317M1	1	**1**	O RING	JOINT TORIQUE ANELLO OR	O-RING JUNTA TORICA
9	3779303M1	1	**1**	CARTRIDGE	CARTOUCHE CARTUCCIA	PATRONE ELEMENTO FILTRO
10	3779304M1	1	**1**	DISTRIBUTOR	DISTRIBUTEUR DISTRIBUTORE	VERTEILER DISTRIBUIDOR
11	3779309M1	1	**2**	WASHER	RONDELLE RONDELLA	UNTERLEGSCHEIBE ARANDELA
12	3779311M1	1	**1**	SPRING	RESSORT MOLLA	FEDER MUELLE
13	3779310M1	1	**1**	SPRING	RESSORT MOLLA	FEDER MUELLE
14	3779312M1	1	**3**	CHOCK	CALE PASSACAVO	UNTERLEG-KEIL CALZA
15	3779313M1	1	**1**	O RING	JOINT TORIQUE ANELLO OR	O-RING JUNTA TORICA
16	3779314M1	1	**1**	PLUG	BOUCHON TAPPO	VERSCHL.STOPFEN TAPON

Gear Box Full Power Shift	Pump
Boite De Vitesses Full Power Shift	Pompe
Getriebe Full Power Shift	Pumpe
Trasmissione Full Power Shift	Pompa
Caja Del Velocidades Full Power Shift	Bomba

25-175

1-ZF68-001-A

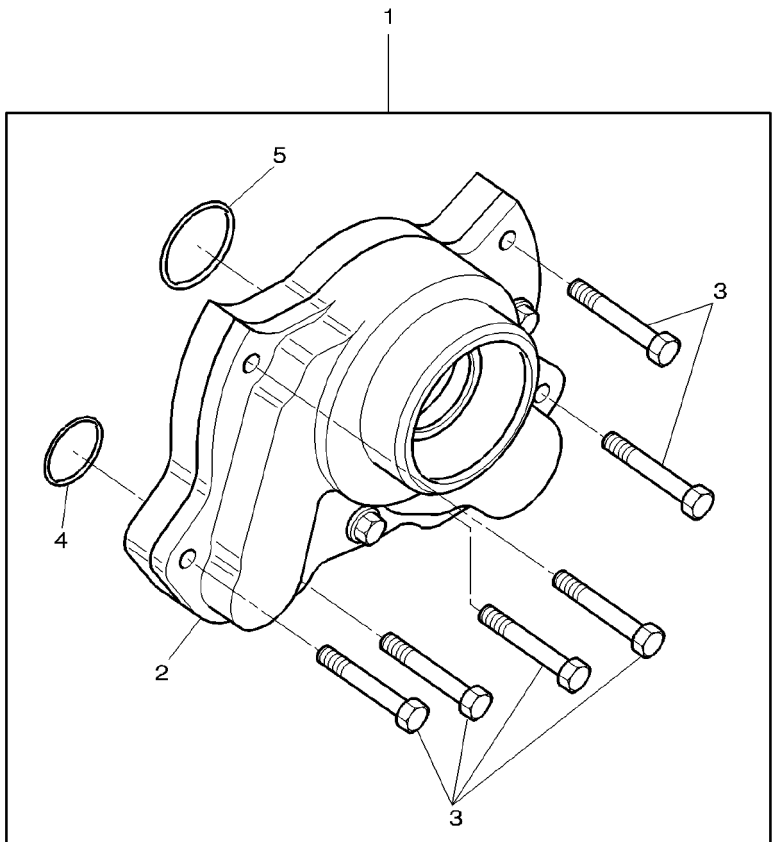

1	3779272M91		**1**	PUMP	POMPE POMPA	PUMPE BOMBA
2	3779273M1	1	**1**	PUMP	POMPE POMPA	PUMPE BOMBA
3	3779217M1	1	**6**	SCREW	VIS VITE	SCHRAUBE TORNILLO
4	3779227M1	1	**1**	O RING	JOINT TORIQUE ANELLO OR	O−RING JUNTA TORICA
5	3779228M1	1	**1**	O RING	JOINT TORIQUE ANELLO OR	O−RING JUNTA TORICA

1-ZF61-001-A

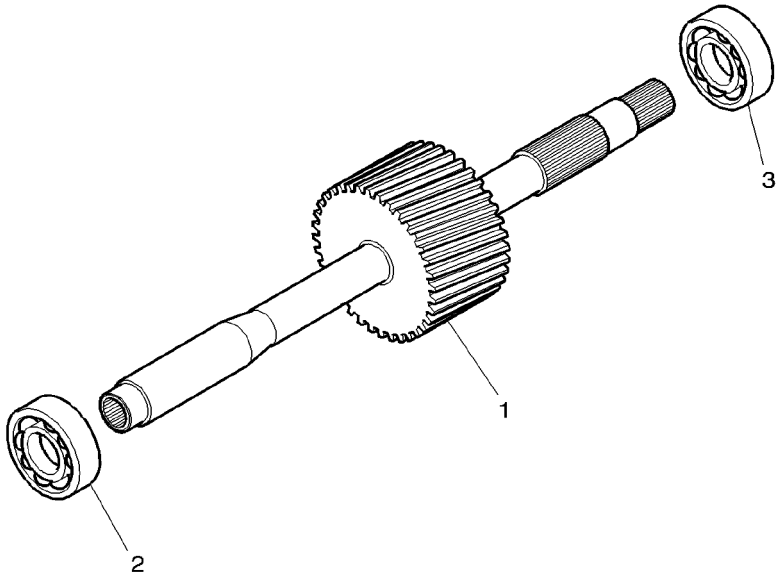

1	3779276M1	**1**	SHAFT	ARBRE ALBERO WELLE ARBOL
2	3779212M1	**1**	BEARING ASSY	ROULEMENT CUSCINETTO COMPL RADIALLAGER RODAMIENTO RAD
3	3779262M1	**1**	BEARING ASSY	ROULEMENT CUSCINETTO COMPL RADIALLAGER RODAMIENTO RAD

Gear Box Full Power Shift	**2 Nd Gears**
Boite De Vitesses Full Power Shift	**Pignons 2 Eme**
Getriebe Full Power Shift	**2 Zahnrad**
Trasmissione Full Power Shift	**Pignoni 2 Eme**
Caja Del Velocidades Full Power Shift	**Pinones 2 Eme**

25-185

1-ZF62-001-A

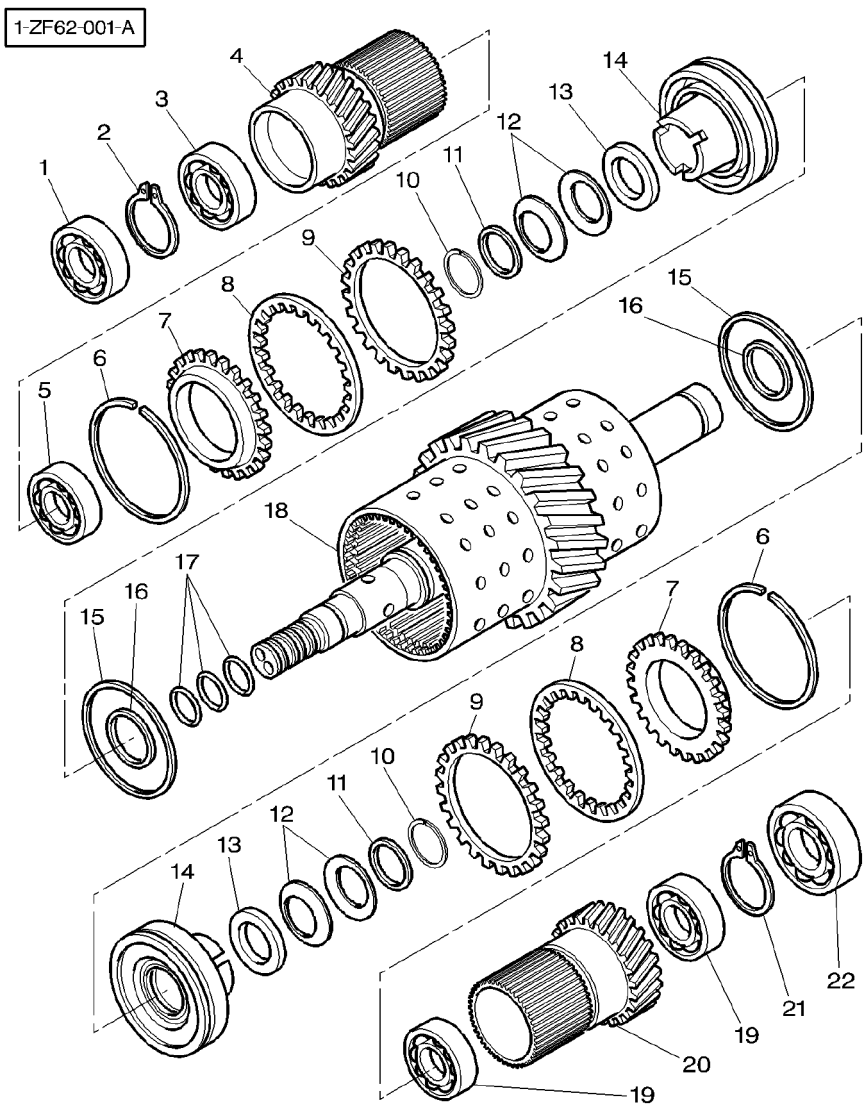

0	3779238M91		**1**	KIT, SPROCKET	JEU PIGNONS KIT RUOTAMOTRICE	KETTENRADSATZ JUEGO DE PINON
1	3779262M1		**1**	BEARING ASSY	ROULEMENT CUSCINETTO COMPL	RADIALLAGER RODAMIENTO RAD
2	3779233M1		**1**	CIRCLIP	SEGMENT D ARRET ANELLO D'ARRESTO	SICHERUNGSRING CIRCULITO
3	3779271M1		**1**	BEARING ASSY	ROULEMENT CUSCINETTO COMPL	RADIALLAGER RODAMIENTO RAD
4	3779246M1	42	**1**	PINION	PIGNON PIGNONE	RITZEL PINON
5	3779263M1		**1**	BEARING ASSY	ROULEMENT CUSCINETTO COMPL	RADIALLAGER RODAMIENTO RAD
6	3779243M1		**2**	CIRCLIP	SEGMENT D ARRET ANELLO D'ARRESTO	SICHERUNGSRING CIRCULITO
7	3779240M1		**2**	CROWNWHEEL	COURONNE DENTEE CORONA	TELLERRAD CORONA DENTADA
8	3779205M1		**20**	DISC	DISQUE DISCO	SCHEIBE DISCO
9	3779216M1		**20**	DISC	DISQUE DISCO	SCHEIBE DISCO
10	3779232M1		**2**	CIRCLIP	SEGMENT D ARRET ANELLO D'ARRESTO	SICHERUNGSRING CIRCULITO
11	3779214M1		**2**	CIRCLIP	SEGMENT D ARRET ANELLO D'ARRESTO	SICHERUNGSRING CIRCULITO
12	3779204M1		**12**	WASHER	RONDELLE RONDELLA	UNTERLEGSCHEIBE ARANDELA
13	3779210M1		**2**	WASHER	RONDELLE RONDELLA	UNTERLEGSCHEIBE ARANDELA
14	3779209M1		**2**	PISTON	PISTON PISTONE	KOLBEN PISTON
15	3779219M1		**2**	GASKET	JOINT GUARNIZIONE	DICHTSCHEIBE EMPAQUETADURA.
16	3779229M1		**2**	O RING	JOINT TORIQUE ANELLO OR	O-RING JUNTA TORICA
17	3779220M1		**3**	OIL SEAL	BAGUE ETANCHEITE BOCCOLA PARAOLIO	OELDICHTRING BUJE RETENACEITE
18	3779245M1		**1**	SHAFT	ARBRE ALBERO	WELLE ARBOL
19	3779211M1		**2**	BEARING ASSY	ROULEMENT CUSCINETTO COMPL	RADIALLAGER RODAMIENTO RAD
20	3779247M1	48	**1**	PINION	PIGNON PIGNONE	RITZEL PINON
21	3779231M1		**1**	CIRCLIP	SEGMENT D ARRET ANELLO D'ARRESTO	SICHERUNGSRING CIRCULITO
22	3779260M1		**1**	BEARING ASSY	ROULEMENT CUSCINETTO COMPL	RADIALLAGER RODAMIENTO RAD

Gear Box Full Power Shift	**3 Rd Gears**
Boite De Vitesses Full Power Shift	**Pignons 3 Eme**
Getriebe Full Power Shift	**3 Zahnrad**
Trasmissione Full Power Shift	**Pignoni 3 Eme**
Caja Del Velocidades Full Power Shift	**Pinones 3 Eme**

25-190

1-ZF63-001-A

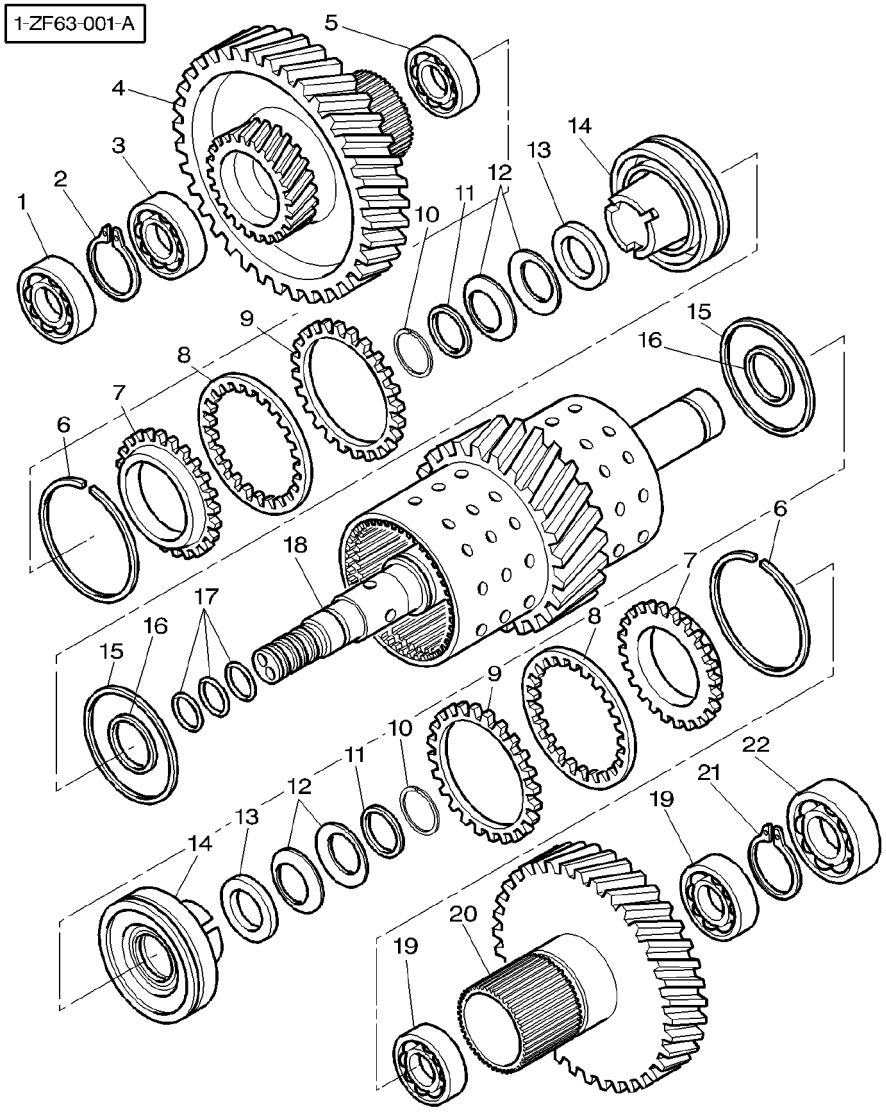

0	3779266M91		**1**	KIT, SPROCKET	JEU PIGNONS KIT RUOTAMOTRICE KETTENRADSATZ JUEGO DE PINON
1	3779262M1		**1**	BEARING ASSY	ROULEMENT CUSCINETTO COMPL RADIALLAGER RODAMIENTO RAD
2	3779233M1		**1**	CIRCLIP	SEGMENT D ARRET ANELLO D'ARRESTO SICHERUNGSRING CIRCULITO
3	3779261M1		**1**	BEARING ASSY	ROULEMENT CUSCINETTO COMPL RADIALLAGER RODAMIENTO RAD
4	3779257M1		**1**	PINION	PIGNON PIGNONE RITZEL PINON
5	3779212M1		**1**	BEARING ASSY	ROULEMENT CUSCINETTO COMPL RADIALLAGER RODAMIENTO RAD
6	3779243M1		**2**	CIRCLIP	SEGMENT D ARRET ANELLO D'ARRESTO SICHERUNGSRING CIRCULITO
7	3779240M1		**2**	CROWNWHEEL	COURONNE DENTEE CORONA TELLERRAD CORONA DENTADA
8	3779205M1		**20**	DISC	DISQUE DISCO SCHEIBE DISCO
9	3779216M1		**20**	DISC	DISQUE DISCO SCHEIBE DISCO
10	3779232M1		**2**	CIRCLIP	SEGMENT D ARRET ANELLO D'ARRESTO SICHERUNGSRING CIRCULITO
11	3779214M1		**2**	CIRCLIP	SEGMENT D ARRET ANELLO D'ARRESTO SICHERUNGSRING CIRCULITO
12	3779204M1		**12**	WASHER	RONDELLE RONDELLA UNTERLEGSCHEIBE ARANDELA
13	3779210M1		**2**	WASHER	RONDELLE RONDELLA UNTERLEGSCHEIBE ARANDELA
14	3779209M1		**2**	PISTON	PISTON PISTONE KOLBEN PISTON
15	3779219M1		**2**	GASKET	JOINT GUARNIZIONE DICHTSCHEIBE EMPAQUETADURA.
16	3779229M1		**2**	O RING	JOINT TORIQUE ANELLO OR O-RING JUNTA TORICA
17	3779220M1		**3**	OIL SEAL	BAGUE ETANCHEITE BOCCOLA PARAOLIO OELDICHTRING BUJE RETENACEITE
18	3779251M1		**1**	SHAFT	ARBRE ALBERO WELLE ARBOL
19	3779211M1		**2**	BEARING ASSY	ROULEMENT CUSCINETTO COMPL RADIALLAGER RODAMIENTO RAD
20	3779248M1	62	**1**	PINION	PIGNON PIGNONE RITZEL PINON
21	3779231M1		**1**	CIRCLIP	SEGMENT D ARRET ANELLO D'ARRESTO SICHERUNGSRING CIRCULITO
22	3779259M1		**1**	BEARING ASSY	ROULEMENT CUSCINETTO COMPL RADIALLAGER RODAMIENTO RAD

Gear Box Full Power Shift	**4 Th Gears**
Boite De Vitesses Full Power Shift	**Pignons 4 Eme**
Getriebe Full Power Shift	**4 Zahnrad**
Trasmissione Full Power Shift	**Pignoni 4 Eme**
Caja Del Velocidades Full Power Shift	**Pinones 4 Eme**

25-195

1-ZF64-001-A

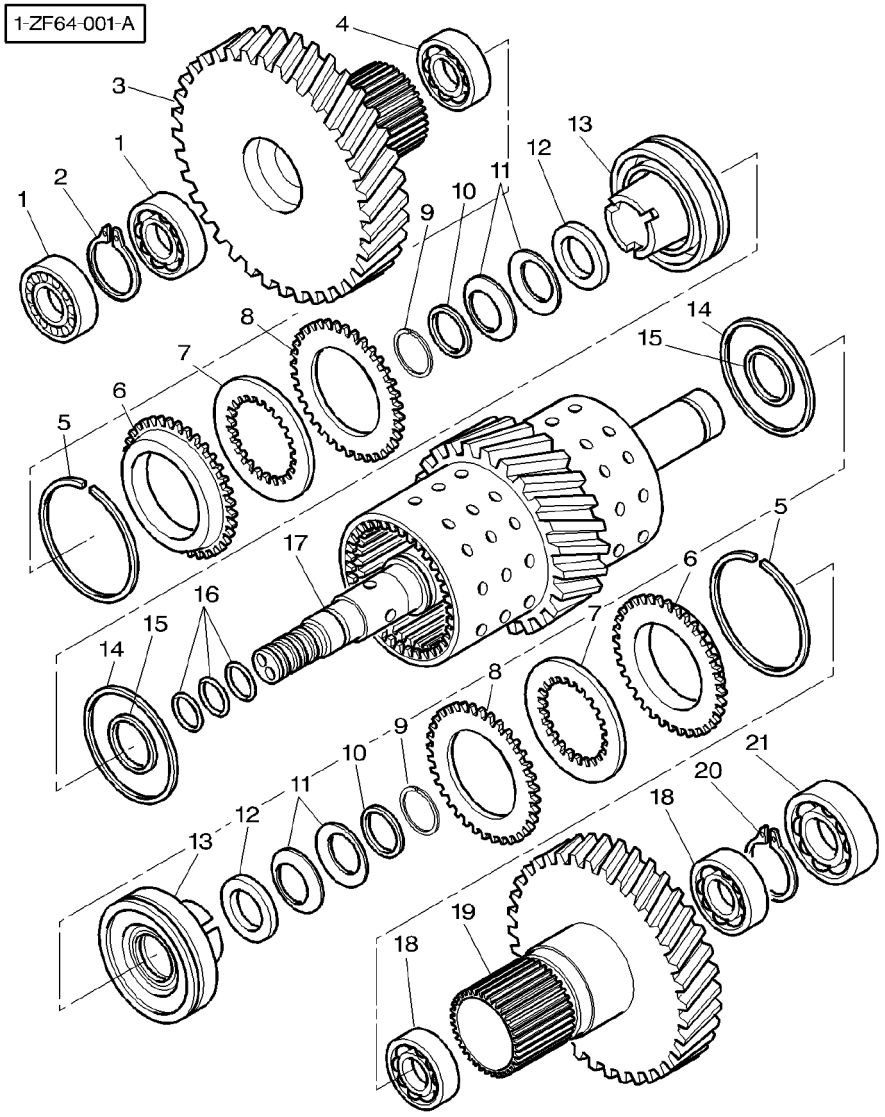

0	3779267M91		**1**	KIT, PINION	JEU PIGNON KIT PIGNONE	RITZELSATZ PINONES JUEGO
1	3779262M1		**2**	BEARING ASSY	ROULEMENT CUSCINETTO COMPL	RADIALLAGER RODAMIENTO RAD
2	3779233M1		**1**	CIRCLIP	SEGMENT D ARRET ANELLO D'ARRESTO	SICHERUNGSRING CIRCULITO
3	3779249M1	70	**1**	PINION	PIGNON PIGNONE	RITZEL PINON
4	3779263M1		**1**	BEARING ASSY	ROULEMENT CUSCINETTO COMPL	RADIALLAGER RODAMIENTO RAD
5	3779243M1		**2**	CIRCLIP	SEGMENT D ARRET ANELLO D'ARRESTO	SICHERUNGSRING CIRCULITO
6	3779240M1		**2**	CROWNWHEEL	COURONNE DENTEE CORONA	TELLERRAD CORONA DENTADA
7	3779205M1		**20**	DISC	DISQUE DISCO	SCHEIBE DISCO
8	3779216M1		**20**	DISC	DISQUE DISCO	SCHEIBE DISCO
9	3779232M1		**2**	CIRCLIP	SEGMENT D ARRET ANELLO D'ARRESTO	SICHERUNGSRING CIRCULITO
10	3779214M1		**2**	CIRCLIP	SEGMENT D ARRET ANELLO D'ARRESTO	SICHERUNGSRING CIRCULITO
11	3779204M1		**12**	WASHER	RONDELLE RONDELLA	UNTERLEGSCHEIBE ARANDELA
12	3779210M1		**2**	WASHER	RONDELLE RONDELLA	UNTERLEGSCHEIBE ARANDELA
13	3779209M1		**2**	PISTON	PISTON PISTONE	KOLBEN PISTON
14	3779219M1		**2**	GASKET	JOINT GUARNIZIONE	DICHTSCHEIBE EMPAQUETADURA.
15	3779229M1		**2**	O RING	JOINT TORIQUE ANELLO OR	O-RING JUNTA TORICA
16	3779220M1		**3**	OIL SEAL	BAGUE ETANCHEITE BOCCOLA PARAOLIO	OELDICHTRING BUJE RETENACEITE
17	3779245M1		**1**	SHAFT	ARBRE ALBERO	WELLE ARBOL
18	3779211M1		**2**	BEARING ASSY	ROULEMENT CUSCINETTO COMPL	RADIALLAGER RODAMIENTO RAD
19	3779250M1	62	**1**	PINION	PIGNON PIGNONE	RITZEL PINON
20	3779231M1		**1**	CIRCLIP	SEGMENT D ARRET ANELLO D'ARRESTO	SICHERUNGSRING CIRCULITO
21	3779259M1		**1**	BEARING ASSY	ROULEMENT CUSCINETTO COMPL	RADIALLAGER RODAMIENTO RAD

Gear Box Full Power Shift	**5 Th Gears**
Boite De Vitesses Full Power Shift	**Pignons 5 Eme**
Getriebe Full Power Shift	**5 Zahnrad**
Trasmissione Full Power Shift	**Pignoni 5 Eme**
Caja Del Velocidades Full Power Shift	**Pinones 5 Eme**

25-200

1-ZF65-001-A

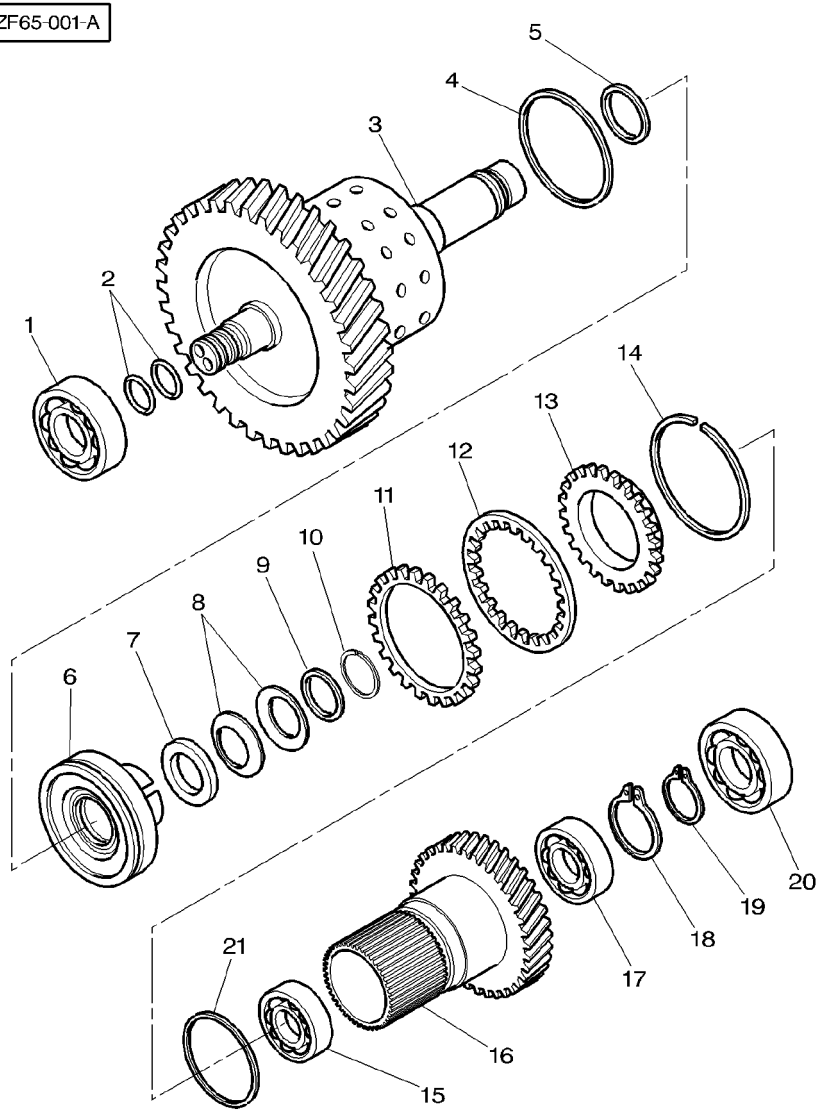

0	3779268M91		**1**	KIT, SPROCKET	JEU PIGNONS KIT RUOTAMOTRICE	KETTENRADSATZ JUEGO DE PINON
1	3779259M1		**1**	BEARING ASSY	ROULEMENT CUSCINETTO COMPL	RADIALLAGER RODAMIENTO RAD
2	3779220M1		**2**	OIL SEAL	BAGUE ETANCHEITE BOCCOLA PARAOLIO	OELDICHTRING BUJE RETENACEITE
3	3779252M1		**1**	SHAFT	ARBRE ALBERO	WELLE ARBOL
4	3779219M1		**1**	GASKET	JOINT GUARNIZIONE	DICHTSCHEIBE EMPAQUETADURA.
5	3779229M1		**1**	O RING	JOINT TORIQUE ANELLO OR	O-RING JUNTA TORICA
6	3779209M1		**1**	PISTON	PISTON PISTONE	KOLBEN PISTON
7	3779210M1		**1**	WASHER	RONDELLE RONDELLA	UNTERLEGSCHEIBE ARANDELA
8	3779204M1		**6**	WASHER	RONDELLE RONDELLA	UNTERLEGSCHEIBE ARANDELA
9	3779214M1		**1**	CIRCLIP	SEGMENT D ARRET ANELLO D'ARRESTO	SICHERUNGSRING CIRCULITO
10	3779232M1		**1**	CIRCLIP	SEGMENT D ARRET ANELLO D'ARRESTO	SICHERUNGSRING CIRCULITO
11	3779216M1		**10**	DISC	DISQUE DISCO	SCHEIBE DISCO
12	3779205M1		**10**	DISC	DISQUE DISCO	SCHEIBE DISCO
13	3779240M1		**1**	CROWNWHEEL	COURONNE DENTEE CORONA	TELLERRAD CORONA DENTADA
14	3779243M1		**1**	CIRCLIP	SEGMENT D ARRET ANELLO D'ARRESTO	SICHERUNGSRING CIRCULITO
15	3779239M1		**1**	BEARING ASSY	ROULEMENT CUSCINETTO COMPL	RADIALLAGER RODAMIENTO RAD
16	3779258M1	40	**1**	PINION	PIGNON PIGNONE	RITZEL PINON
17	3779264M1		**1**	BEARING ASSY	ROULEMENT CUSCINETTO COMPL	RADIALLAGER RODAMIENTO RAD
18	3779231M1		**1**	CIRCLIP	SEGMENT D ARRET ANELLO D'ARRESTO	SICHERUNGSRING CIRCULITO
19	3779233M1		**1**	CIRCLIP	SEGMENT D ARRET ANELLO D'ARRESTO	SICHERUNGSRING CIRCULITO
20	3779262M1		**1**	BEARING ASSY	ROULEMENT CUSCINETTO COMPL	RADIALLAGER RODAMIENTO RAD
21	3779230M1		**1**	O RING	JOINT TORIQUE ANELLO OR	O-RING JUNTA TORICA

Gear Box Full Power Shift	**6 Th Gears**
Boite De Vitesses Full Power Shift	**Pignons 6 Eme**
Getriebe Full Power Shift	**6 Zahnrad**
Trasmissione Full Power Shift	**Pignoni 6 Eme**
Caja Del Velocidades Full Power Shift	**Pinones 6 Eme**

25-205

1-ZF66-001-A

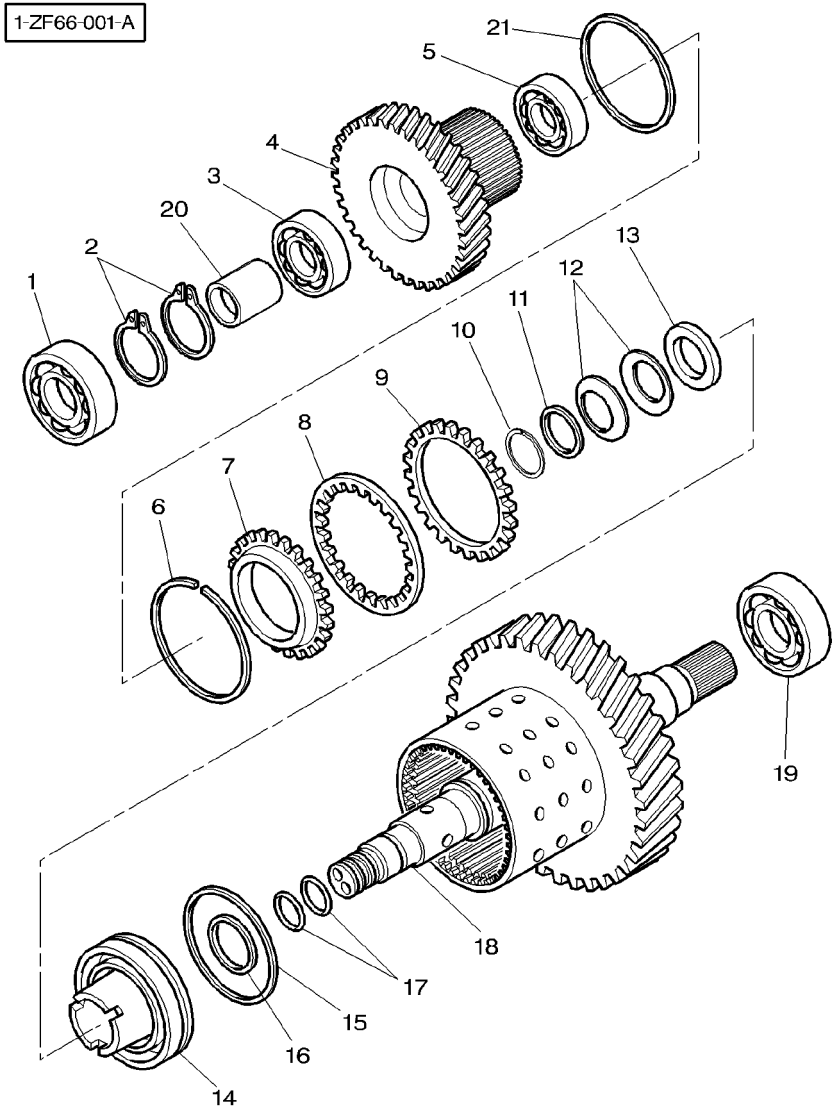

0	3779269M91		1	KIT, SPROCKET	JEU PIGNONS KIT RUOTAMOTRICE	KETTENRADSATZ JUEGO DE PINON
1	3779259M1		1	BEARING ASSY	ROULEMENT CUSCINETTO COMPL	RADIALLAGER RODAMIENTO RAD
2	3779231M1		2	CIRCLIP	SEGMENT D ARRET ANELLO D'ARRESTO	SICHERUNGSRING CIRCULITO
3	3779264M1		1	BEARING ASSY	ROULEMENT CUSCINETTO COMPL	RADIALLAGER RODAMIENTO RAD
4	3779254M1	48	1	PINION	PIGNON PIGNONE	RITZEL PINON
5	3779239M1		1	BEARING ASSY	ROULEMENT CUSCINETTO COMPL	RADIALLAGER RODAMIENTO RAD
6	3779243M1		1	CIRCLIP	SEGMENT D ARRET ANELLO D'ARRESTO	SICHERUNGSRING CIRCULITO
7	3779240M1		1	CROWNWHEEL	COURONNE DENTEE CORONA	TELLERRAD CORONA DENTADA
8	3779205M1		10	DISC	DISQUE DISCO	SCHEIBE DISCO
9	3779216M1		10	DISC	DISQUE DISCO	SCHEIBE DISCO
10	3779232M1		1	CIRCLIP	SEGMENT D ARRET ANELLO D'ARRESTO	SICHERUNGSRING CIRCULITO
11	3779214M1		1	CIRCLIP	SEGMENT D ARRET ANELLO D'ARRESTO	SICHERUNGSRING CIRCULITO
12	3779204M1		6	WASHER	RONDELLE RONDELLA	UNTERLEGSCHEIBE ARANDELA
13	3779210M1		1	WASHER	RONDELLE RONDELLA	UNTERLEGSCHEIBE ARANDELA
14	3779209M1		1	PISTON	PISTON PISTONE	KOLBEN PISTON
15	3779219M1		1	GASKET	JOINT GUARNIZIONE	DICHTSCHEIBE EMPAQUETADURA.
16	3779229M1		1	O RING	JOINT TORIQUE ANELLO OR	O-RING JUNTA TORICA
17	3779220M1		2	OIL SEAL	BAGUE ETANCHEITE BOCCOLA PARAOLIO	OELDICHTRING BUJE RETENACEITE
18	3779253M1		1	SHAFT	ARBRE ALBERO	WELLE ARBOL
19	3779213M1		1	BEARING ASSY	ROULEMENT CUSCINETTO COMPL	RADIALLAGER RODAMIENTO RAD
20	3779274M1		1	SPACER	ENTRETOISE DISTANZIALE	ABSTANDSTUECK PIEZA DISTANCIA
21	3779230M1		1	O RING	JOINT TORIQUE ANELLO OR	O-RING JUNTA TORICA

Gear Box Full Power Shift	**7 Th Gears**
Boite De Vitesses Full Power Shift	**Pignons 7 Eme**
Getriebe Full Power Shift	**7 Zahnrad**
Trasmissione Full Power Shift	**Pignoni 7 Eme**
Caja Del Velocidades Full Power Shift	**Pinones 7 Eme**

25-210

1-ZF67-001-A

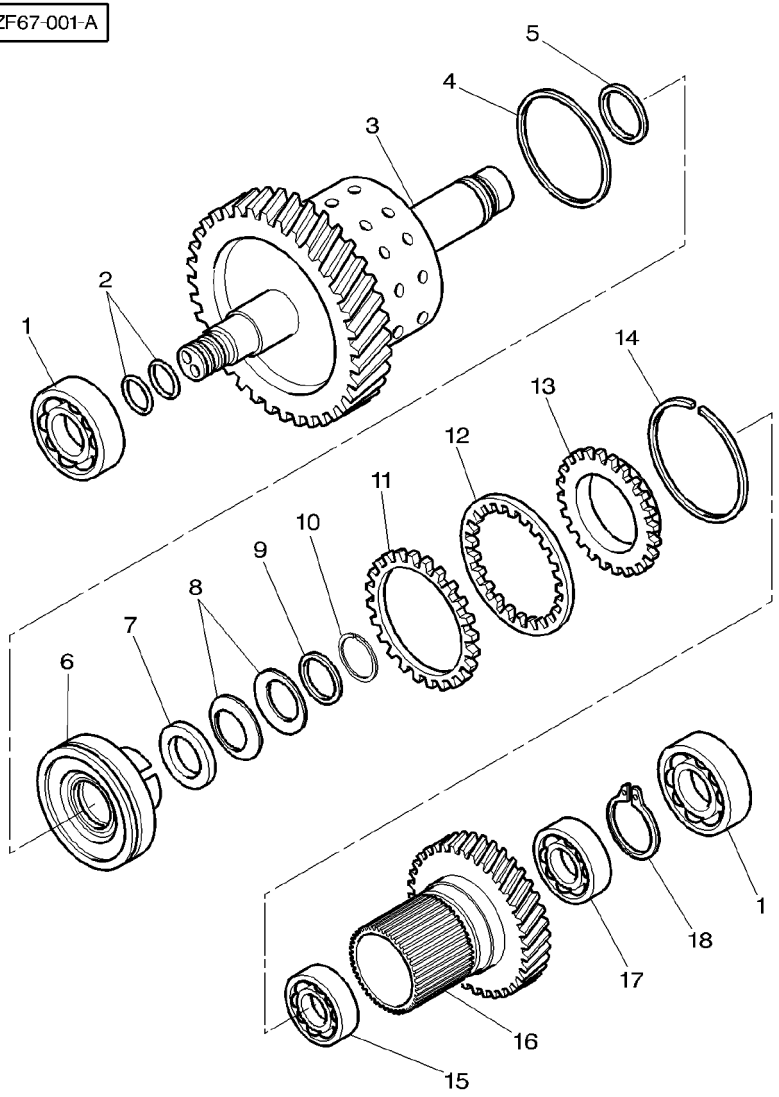

0	3779270M91		**1**	KIT, SPROCKET	JEU PIGNONS	KETTENRADSATZ
					KIT RUOTAMOTRICE	JUEGO DE PINON
1	3779260M1		**2**	BEARING ASSY	ROULEMENT	RADIALLAGER
					CUSCINETTO COMPL	RODAMIENTO RAD
2	3779220M1		**2**	OIL SEAL	BAGUE ETANCHEITE	OELDICHTRING
					BOCCOLA PARAOLIO	BUJE RETENACEITE
3	3779255M1		**1**	SHAFT	ARBRE	WELLE
					ALBERO	ARBOL
4	3779219M1		**1**	GASKET	JOINT	DICHTSCHEIBE
					GUARNIZIONE	EMPAQUETADURA.
5	3779229M1		**1**	O RING	JOINT TORIQUE	O−RING
					ANELLO OR	JUNTA TORICA
6	3779209M1		**1**	PISTON	PISTON	KOLBEN
					PISTONE	PISTON
7	3779210M1		**1**	WASHER	RONDELLE	UNTERLEGSCHEIBE
					RONDELLA	ARANDELA
8	3779204M1		**6**	WASHER	RONDELLE	UNTERLEGSCHEIBE
					RONDELLA	ARANDELA
9	3779214M1		**1**	CIRCLIP	SEGMENT D ARRET	SICHERUNGSRING
					ANELLO D'ARRESTO	CIRCULITO
10	3779232M1		**1**	CIRCLIP	SEGMENT D ARRET	SICHERUNGSRING
					ANELLO D'ARRESTO	CIRCULITO
11	3779216M1		**10**	DISC	DISQUE	SCHEIBE
					DISCO	DISCO
12	3779205M1		**10**	DISC	DISQUE	SCHEIBE
					DISCO	DISCO
13	3779240M1		**1**	CROWNWHEEL	COURONNE DENTEE	TELLERRAD
					CORONA	CORONA DENTADA
14	3779243M1		**1**	CIRCLIP	SEGMENT D ARRET	SICHERUNGSRING
					ANELLO D'ARRESTO	CIRCULITO
15	3779239M1		**1**	BEARING ASSY	ROULEMENT	RADIALLAGER
					CUSCINETTO COMPL	RODAMIENTO RAD
16	3779256M1	40	**1**	PINION	PIGNON	RITZEL
					PIGNONE	PINON
17	3779264M1		**1**	BEARING ASSY	ROULEMENT	RADIALLAGER
					CUSCINETTO COMPL	RODAMIENTO RAD
18	3779231M1		**1**	CIRCLIP	SEGMENT D ARRET	SICHERUNGSRING
					ANELLO D'ARRESTO	CIRCULITO
19	3779230M1	[A]	**1**	O RING	JOINT TORIQUE	O−RING
					ANELLO OR	JUNTA TORICA

[A] NOT ILLUSTRATED
NON ILLUSTRE
NICHT ABGEBILDET
NON ILLUSTRATO
NO ILUSTRADO

1-ZW26-001-A

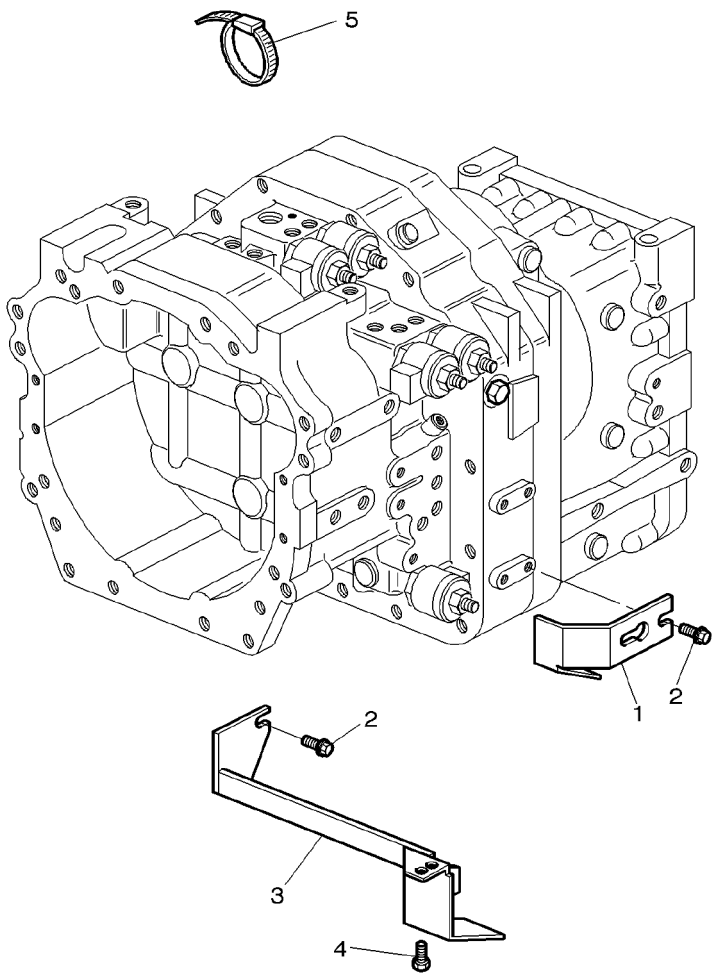

1	3791186M1	◀	**1**	COWL	GARANT CAPPOTTATURA	AUFSATZ CAPERUZA
2	3009920X1	M8X16	**1**	PLOUGH BOLT	VIS A EMBASE VITE TESTA TONDA	SENKSCHLOSSSCHRB TORNILLO ALOJ C
3	3791191M1	▶	**1**	COWL	GARANT CAPPOTTATURA	AUFSATZ CAPERUZA
4	339228X1	M8X12	**2**	SCREW METRIC	VIS METRIQUE VITE METRICA	SCHRAUBE METR TORNILLO METRICO
5	293854M1		**3**	CLAMP	COLLIER FASCETTA	HALTESCHELLE ABRAZADERA

Rear Axle Essieu Arriere Hinterasche Assale Posteriore Eje Trasero	Intermediary Housing Carter Intermediaire Zusatzgehaeuse Carcassa Intermadia Caja Intermedia	30-5	With Full Powershift Avec Full Powershift Mit Full Powershift Con Full Powershift Con Full Powershift

1-ZG63-002-B

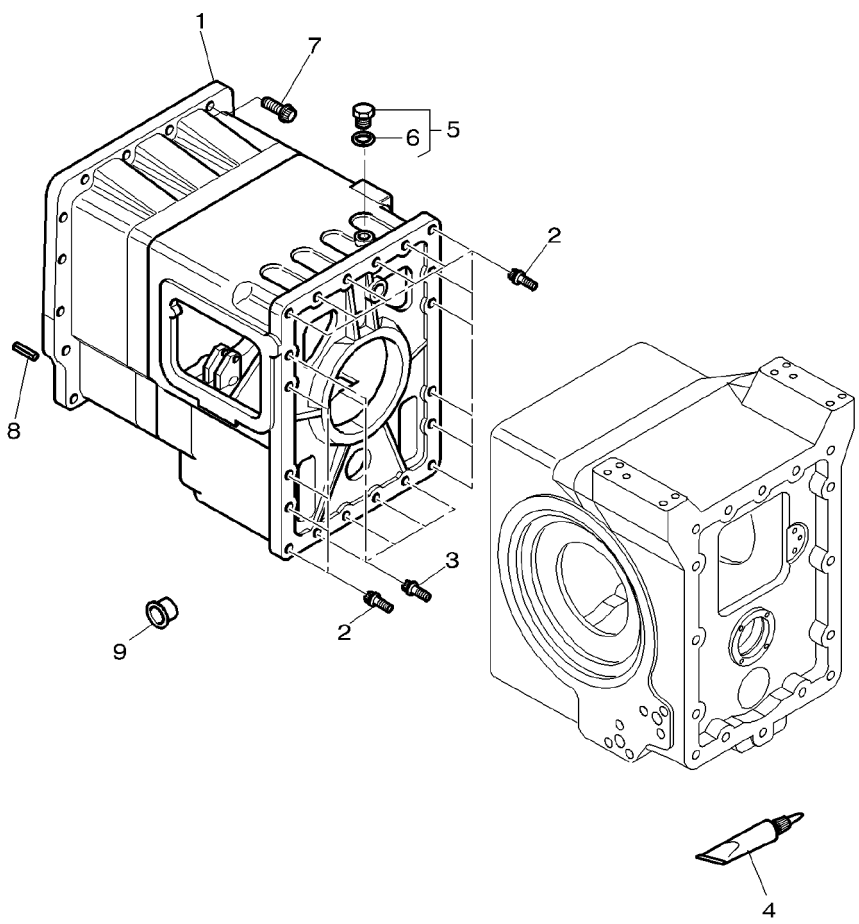

1	3716413M4		
2	3009805X1	M16X60	
3	3009806X1	M16X70	
4	3900613M2		
5	3019649X91	M33	
6	3019399X1	5	
7	3010007X1	M16X60	
8	3385839M2		
9	3792315M1	[A] ∅ 20,9MM	
9	3792314M1	[A] ∅ 15MM	
9	3583240M1	[A] ∅ 6MM	

[A] PLASTICS
PLASTIQUE
PLASTIKSTOFFE
MATERIE PLASTICHE
PLASTICO

1	HOUSING	CARTER CARCASSA	GEHAEUSE ALOJAMIENTO
15	SCREW METRIC	VIS METRIQUE VITE METRICA	SCHRAUBE METR TORNILLO METRICO
5	PLOUGH BOLT	VIS A EMBASE VITE TESTA TONDA	SENKSCHLOSSSCHRB TORNILLO ALOJ C
X	LOCTITE	LOCTITE LOCTITE	LOCTITE LOCTITE
1	PLUG	BOUCHON TAPPO	VERSCHL.STOPFEN TAPON
1	O RING	JOINT TORIQUE ANELLO OR	O-RING JUNTA TORICA
18	SCREW METRIC	VIS METRIQUE VITE METRICA	SCHRAUBE METR TORNILLO METRICO
2	PIN	GOUPILLE PERNO	BOLZEN PASADOR
2	PLUG	BOUCHON TAPPO	VERSCHL.STOPFEN TAPON
4	PLUG	BOUCHON TAPPO	VERSCHL.STOPFEN TAPON
8	PLUG	BOUCHON TAPPO	VERSCHL.STOPFEN TAPON

1-ZG63-001-B

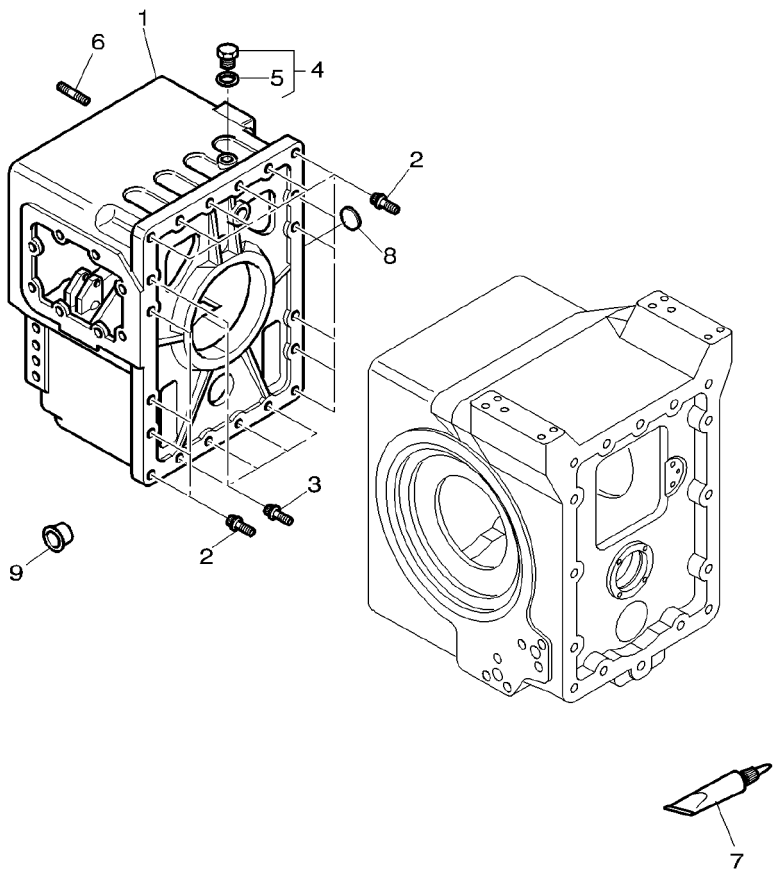

1	3716414M4		
2	3009805X1	M16X60	
3	3009806X1	M16X70	
4	3019649X91	M33	
5	3019399X1	4	
6	3716945M1	M16	
7	3900613M2		
8	19466X	∅ 50 MM	
9	3792315M1	[A] ∅ 20,9MM	
9	3792314M1	[A] ∅ 15MM	
9	3583240M1	[A] ∅ 6MM	

[A] PLASTICS
PLASTIQUE
PLASTIKSTOFFE
MATERIE PLASTICHE
PLASTICO

1	HOUSING	CARTER CARCASSA	GEHAEUSE ALOJAMIENTO
15	SCREW METRIC	VIS METRIQUE VITE METRICA	SCHRAUBE METR TORNILLO METRICO
5	PLOUGH BOLT	VIS A EMBASE VITE TESTA TONDA	SENKSCHLOSSSCHRB TORNILLO ALOJ C
1	PLUG	BOUCHON TAPPO	VERSCHL.STOPFEN TAPON
1	O RING	JOINT TORIQUE ANELLO OR	O-RING JUNTA TORICA
3	STUD	GOUJON PRIGIONIERO	STEHBOLZEN ESPARRAGO
X	LOCTITE	LOCTITE LOCTITE	LOCTITE LOCTITE
1	PLUG	BOUCHON TAPPO	VERSCHL.STOPFEN TAPON
2	PLUG	BOUCHON TAPPO	VERSCHL.STOPFEN TAPON
4	PLUG	BOUCHON TAPPO	VERSCHL.STOPFEN TAPON
8	PLUG	BOUCHON TAPPO	VERSCHL.STOPFEN TAPON

Handbrake Frein A Main Handbremse Freno A Mano Freno De Mano	Lower Control Commandes Inferieures Innere Betaetigung Comando Inferiore Mando Inferior	**30-15**

1-ZG26-001-A

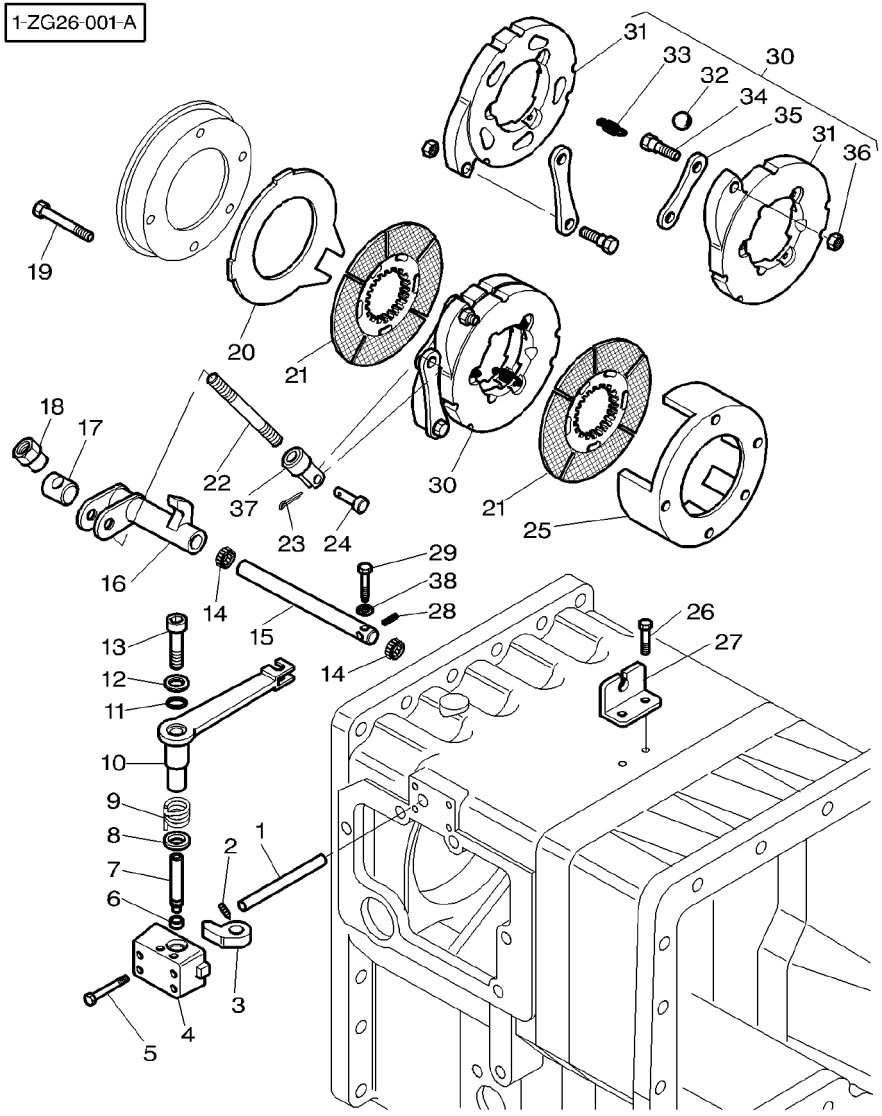

1	3716540M1		**1**	TAPPET ROD	TIGE POUSSOIR ASTA PUNTERIE	STOESSELSTANGE VARILLA VALVULA
2	3009429X1	M6x10	**1**	SCREW	VIS VITE	SCHRAUBE TORNILLO
3	3716544M1		**1**	POPPET	POUSSOIR SUPPORTO VERTIC.	VENTILKEGEL CONTRAPUNTA
4	3716501M1		**1**	CASE ASSY	BOITIER CARCASSA COMPLET	GEHAEUSE KPL CAJA COMPLETA
5	390246X1	M8X70	**4**	BOLT	BOULON BULLONE	MASCH.SCHRAUBE PERNO
6	3716560M1		**1**	BUSH	BAGUE BOCCOLA	BUCHSE CASQUILLO
7	3716503M2		**1**	CLEVIS PIN	AXE PERNO D'ATTACCO	SPLINTBOLZEN BULON CILINDRICO
8	3716310M1		**1**	OIL SEAL	BAGUE ETANCHEITE BOCCOLA PARAOLIO	OELDICHTRING BUJE RETENACEITE
9	3716554M2		**1**	SPRING	RESSORT MOLLA	FEDER MUELLE
10	3716502M2		**1**	SHIFTER	LEVIER DE CDE SPOSTACINGHIA	AUSRUECKER CAMBIADOR
11	3010740X1		**1**	O RING	JOINT TORIQUE ANELLO OR	O-RING JUNTA TORICA
12	3716539M1		**1**	WASHER	RONDELLE RONDELLA	UNTERLEGSCHEIBE ARANDELA
13	1440350X1	M6X20	**1**	SCREW METRIC	VIS METRIQUE VITE METRICA	SCHRAUBE METR TORNILLO METRICO
14	3716561M1	∅ 20 MM	**2**	BUSH	BAGUE BOCCOLA	BUCHSE CASQUILLO
15	3716542M1		**1**	CLEVIS PIN	AXE PERNO D'ATTACCO	SPLINTBOLZEN BULON CILINDRICO
16	3716477M2		**1**	ANGLE TRANS.	RENVOI ANGOLO TRASMISS.	WINKELGETRIEBE TRANSANGULAR
17	3581305M1		**1**	TRUNNION	TOURILLON PERNO ARTICOLAZ.	ZAPFEN MUNON
18	3791431M1		**1**	NUT SPECIAL	ECROU SPECIAL DADO SPECIALE	SPEZIALMUTTER TUERCA ESPECIAL
19	3009301X1	M12x80	**5**	SCREW METRIC	VIS METRIQUE VITE METRICA	SCHRAUBE METR TORNILLO METRICO
20	3716932M1	[A]	**4**	COUNTERPLATE	CONTRE PLAQUE CONTROPIASTRA	GEGENPLATTE CONTRAPLACA
21	3716933M1	[A]	**6**	DISC	DISQUE DISCO	SCHEIBE DISCO
22	3791669M1		**1**	STUD	GOUJON PRIGIONIERO	STEHBOLZEN ESPARRAGO
23	354048X1	∅ 2,4 MM ◀▶ 19 MM	**1**	PIN	GOUPILLE PERNO	BOLZEN PASADOR
24	354190X1	∅ 7/16"	**1**	CLEVIS PIN	AXE PERNO D'ATTACCO	SPLINTBOLZEN BULON CILINDRICO
25	3716411M2	[A]	**1**	CASE ASSY	BOITIER CARCASSA COMPLET	GEHAEUSE KPL CAJA COMPLETA
26	339228X1	M8x12	**2**	SCREW METRIC	VIS METRIQUE VITE METRICA	SCHRAUBE METR TORNILLO METRICO

1-ZG26-001-A

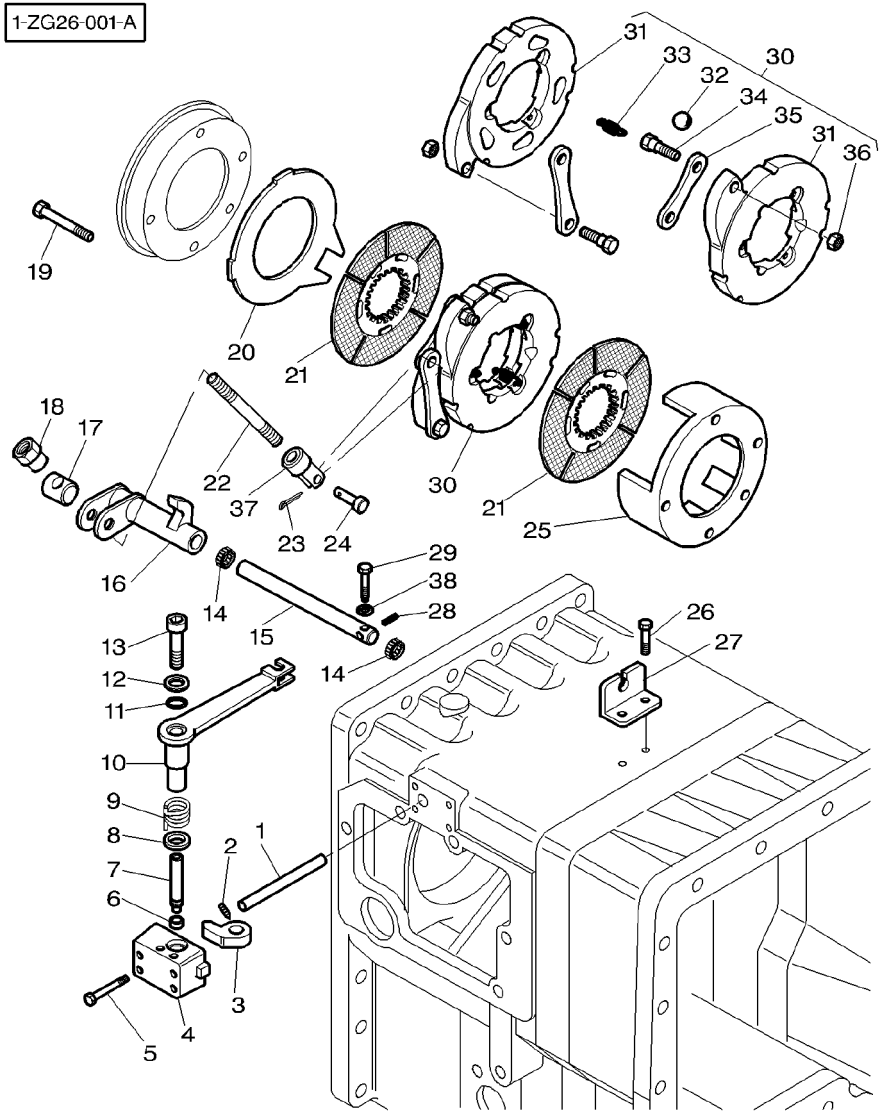

27	3716543M1	➡	H344001
28	1440394X1	∅	4 MM
29	3791488M2	◀▶	30 MM
30	3716920M91		
31		30	REF NO 30
32	3310764M1	30	
33	3310765M1	30	
34	3902669M1	30	
35	3902668M1	30	
36	3902667M1	30	
37	3790494M1		
38	195561M1		

[A] 6 PLATE WET BRAKES
6 DISQUES DE FREIN
6 BREMSSCHEIBES
6 DISCI DEL FRENI
6 DISCOS DEL FRENO

1	SUPPORT	SUPPORT SUPPORTO	LAGERUNG DISPOS.DE SOSTEN
1	PIN	GOUPILLE PERNO	BOLZEN PASADOR
1	SCREW SPECIAL	VIS SPECIALE VITE SPECIALE	SPEZIALSCHRAUBE TORNILLO ESPEC.
1	BRAKE	FREIN FRENO	BREMSE FRENO
2	DISC	DISQUE DISCO	SCHEIBE DISCO
5	BALL	BILLE SFERA	KUGEL BOLA
3	SPRING	RESSORT MOLLA	FEDER MUELLE
2	SCREW	VIS VITE	SCHRAUBE TORNILLO
2	DRAGLINK	TIRANT MAGLIA PER DRAGA	SCHUBSTANGE ENGANCHE DE TIRO
2	NUT	ECROU DADO	MUTTER TUERCA
1	DRAGLINK	TIRANT MAGLIA PER DRAGA	SCHUBSTANGE ENGANCHE DE TIRO
1	O RING	JOINT TORIQUE ANELLO OR	O−RING JUNTA TORICA

Parking Brake	With Powershift
Frein De Parking	Avec Powershift
Feststellbremse	Mit Powershift
Freno Di Parcheggio	Con Powershift
Controles De Frenos	Con Powershift

30-20

1-ZG64-001-A

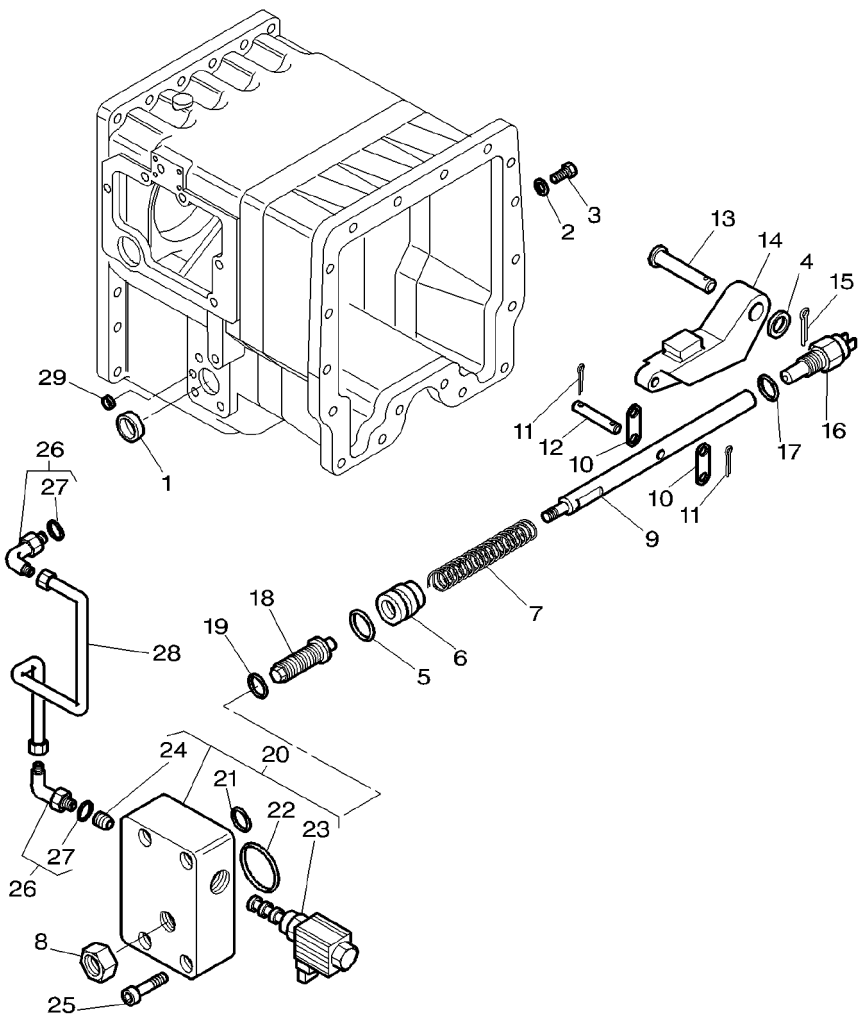

1	3010663X1	[A]	**1**	PLUG	BOUCHON TAPPO	VERSCHL.STOPFEN TAPON
2	3010890X1	[A]	**1**	BUSH	BAGUE BOCCOLA	BUCHSE CASQUILLO
3	3019424X1	[A] M14	**1**	PLUG	BOUCHON TAPPO	VERSCHL.STOPFEN TAPON
4	3791380M1	∅ 19 MM	**1**	WASHER	RONDELLE RONDELLA	UNTERLEGSCHEIBE ARANDELA
5	366434X1		**1**	O RING	JOINT TORIQUE ANELLO OR	O-RING JUNTA TORICA
6	3791570M1		**1**	PISTON	PISTON PISTONE	KOLBEN PISTON
7	3716228M1		**1**	SPRING	RESSORT MOLLA	FEDER MUELLE
8	***3384600M2***	➡| J249006 M18X1,5	**1**	NUT SPECIAL	ECROU SPECIAL DADO SPECIALE	SPEZIALMUTTER TUERCA ESPECIAL
8	390336X1	➡ J249007 M18X2,5	**1**	NUT METRIC	ECROU METRIQUE DADO METRICO	MUTTER METRISCH TUERCA METRICO
9	3791571M2		**1**	STEM	TIGE STELO	STIEL VASTAGO
10	3716548M1		**2**	ROD LINK	BIELLETTE BISCOTTINO	VERBINDG.STANGE VARILLA ENGANCHE
11	1442993X1	∅ 3,2 MM	**2**	PIN	GOUPILLE PERNO	BOLZEN PASADOR
12	3791124M2		**2**	CLEVIS PIN	AXE PERNO D'ATTACCO	SPLINTBOLZEN BULON CILINDRICO
13	3791125M4		**1**	CLEVIS PIN	AXE PERNO D'ATTACCO	SPLINTBOLZEN BULON CILINDRICO
14	3716551M4		**1**	RATCHET	CLIQUET DENTE ARRESTO	SCHALTKLINKE TRINQUETE
15	339531X1	∅ 4 MM	**1**	PIN	GOUPILLE PERNO	BOLZEN PASADOR
16	***3792196M1***		**1**	SWITCH,INDIRECT	CONTACTEUR INTERRUTTORE IND	KONTAKTSCHALTER CONTACTOR
17	3010890X1		**1**	BUSH	BAGUE BOCCOLA	BUCHSE CASQUILLO
18	3790951M1	➡| J249006 M18X1,5	**1**	SCREW	VIS VITE	SCHRAUBE TORNILLO
18	3793504M1	➡ J249007 M18X2,5	**1**	SETSCREW	VIS DE BLOCAGE INSIEME VITI	STELLSCHRAUBE TORNILLO AJUSTE
19	3007118X1	➡| J249006	**1**	O RING	JOINT TORIQUE ANELLO OR	O-RING JUNTA TORICA
19	3010946X1	➡ J249007	**1**	O RING	JOINT TORIQUE ANELLO OR	O-RING JUNTA TORICA
20	3791141M91	➡| J249006	**1**	BLOCK	BLOC BLOCCO	BLOCK BLOQUE
20	3793505M91	➡ J249007	**1**	SPACER	ENTRETOISE DISTANZIALE	ABSTANDSTUECK PIEZA DISTANCIA
21	3019467X1	20 ∅ 10,1x1,6 MM	**1**	O RING	JOINT TORIQUE ANELLO OR	O-RING JUNTA TORICA
22	364281X1	20 ∅ 47,35x1,78 MM	**1**	O RING	JOINT TORIQUE ANELLO OR	O-RING JUNTA TORICA

1-ZG64-001-A

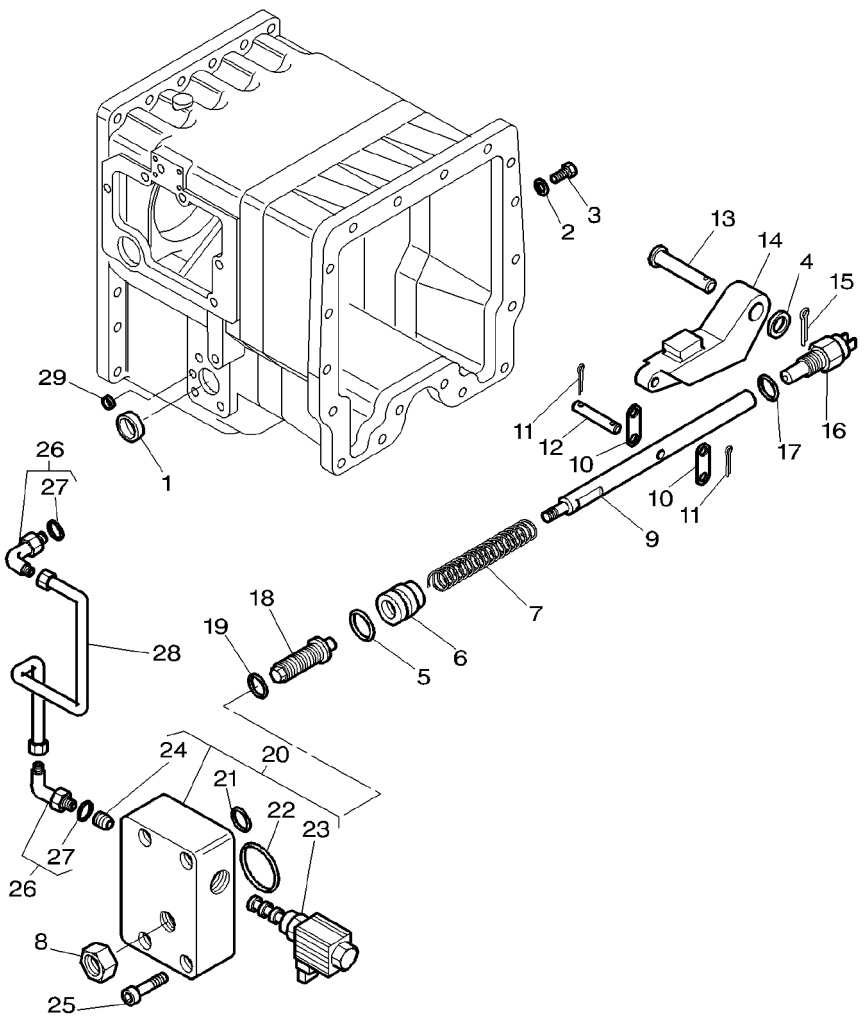

23	***3791106M1***	20	**1**	ELECTROVALVE	ELECTROVANNE ELETTROVALVOLA ELECTRON.VENTIL ELECTROVALVULA
24	3791107M1	20	**1**	NON RETURN VALVE	CLAPET VALVOLA NO RITOR RUCKSCHLAGVENTIL VALVULA DE GRANO
25	3001758X1	M6x50	**4**	SCREW METRIC	VIS METRIQUE VITE METRICA SCHRAUBE METR TORNILLO METRICO
26	3019412X91		**2**	ELBOW	COUDE GOMITO WINKELSTUECK CODO
27	3019395X1	26	**1**	O RING	JOINT TORIQUE ANELLO OR O-RING JUNTA TORICA
28	3791286M1		**1**	TUBE	TUBE TUBO ROHR TUBO
29	3010761X1		**1**	PLUG	BOUCHON TAPPO VERSCHL.STOPFEN TAPON

[A] WITHOUT PARKING BRAKE
SANS FREIN DE PARKING
OHNE FESTSTELLBREMSE
SIN FRENO DI PARCHEGGIO
SENZA CONTROLES DE FRENOS

1-ZG28-002-B

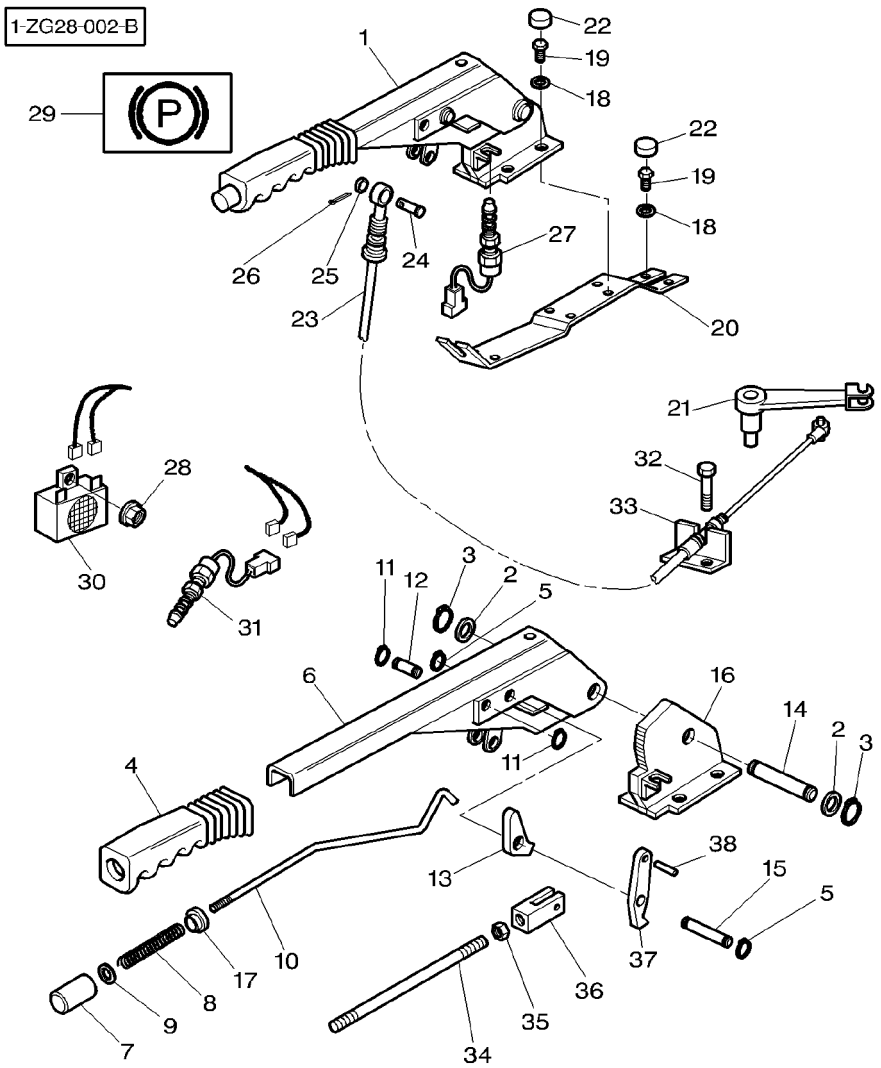

1	3778478M92	[A]	**1**	HANDBRAKE ASSY	FREIN A MAIN FRENO A MANO	HANDBREMSE FRENO DE MANO
1	3779132M92	[B]	**1**	HANDBRAKE ASSY	FREIN A MAIN FRENO A MANO	HANDBREMSE FRENO DE MANO
2	1693980M1	1	**2**	WASHER	RONDELLE RONDELLA	UNTERLEGSCHEIBE ARANDELA
3	339356X1	1	**2**	CIRCLIP	SEGMENT D ARRET ANELLO D'ARRESTO	SICHERUNGSRING CIRCULITO
4	1693965M1	1	**1**	HANDLE	POIGNEE MANIGLIA	HANDGRIFF MANETA
5	1440988X1	1	**2**	CLIP	CLIP FERMAGLIO	SCHELLE CRAPA RETEN
6		1 [A] REF. No 1	**1**	LEVER	LEVIER LEVA	HEBEL PALANCA
6	3715941M1	1 [B]	**1**	LEVER	LEVIER LEVA	HEBEL PALANCA
7	3616904M1	1	**1**	BUTTON	BOUTON PULSANTE	KNOPFTASTE PULSADOR
8	1693970M1	1	**1**	SPRING	RESSORT MOLLA	FEDER MUELLE
9	353754X1	1	**1**	WASHER	RONDELLE RONDELLA	UNTERLEGSCHEIBE ARANDELA
10	3715943M1	1 [A]	**1**	ROD	TRINGLE ASTA	STANGE VARILLA
10	3715943M1	1 [B] H091014	**1**	ROD	TRINGLE ASTA	STANGE VARILLA
11	1440988X1	1	**2**	CLIP	CLIP FERMAGLIO	SCHELLE CRAPA RETEN
12	1693974M1	1	**1**	CLEVIS PIN	AXE PERNO D'ATTACCO	SPLINTBOLZEN BULON CILINDRICO
13	3715942M1	1 [B] H091014	**1**	RATCHET	CLIQUET DENTE ARRESTO	SCHALTKLINKE TRINQUETE
13	3715942M1	1 [A]	**1**	RATCHET	CLIQUET DENTE ARRESTO	SCHALTKLINKE TRINQUETE
14	1693976M1	1	**1**	CLEVIS PIN	AXE PERNO D'ATTACCO	SPLINTBOLZEN BULON CILINDRICO
15	1693973M1	1	**1**	CLEVIS PIN	AXE PERNO D'ATTACCO	SPLINTBOLZEN BULON CILINDRICO
16	3779133M92	1	**1**	SECTOR	SECTEUR SETTORE	SEKTOR SECTOR
17	3616905M1	1	**1**	WASHER	RONDELLE RONDELLA	UNTERLEGSCHEIBE ARANDELA
18	390972X1		**8**	WASHER METRIC	RONDELLE METR. RONDELLA METRICO	SCHEIBE METRISCH ARANDELA METRICO
19	339123X1	M8X20	**8**	SCREW METRIC	VIS METRIQUE VITE METRICA	SCHRAUBE METR TORNILLO METRICO
20	3778452M1	[A]	**1**	SUPPORT	SUPPORT SUPPORTO	LAGERUNG DISPOS.DE SOSTEN
20	3778453M2	[B]	**1**	BRAKE CARRIER	SUPPORT DE FREIN SUPPORTO FRENO	BREMSTRAEGER SOPORTE DE FRENO
21	3716502M2		**1**	SHIFTER	LEVIER DE CDE SPOSTACINGHIA	AUSRUECKER CAMBIADOR

1-ZG28-002-B

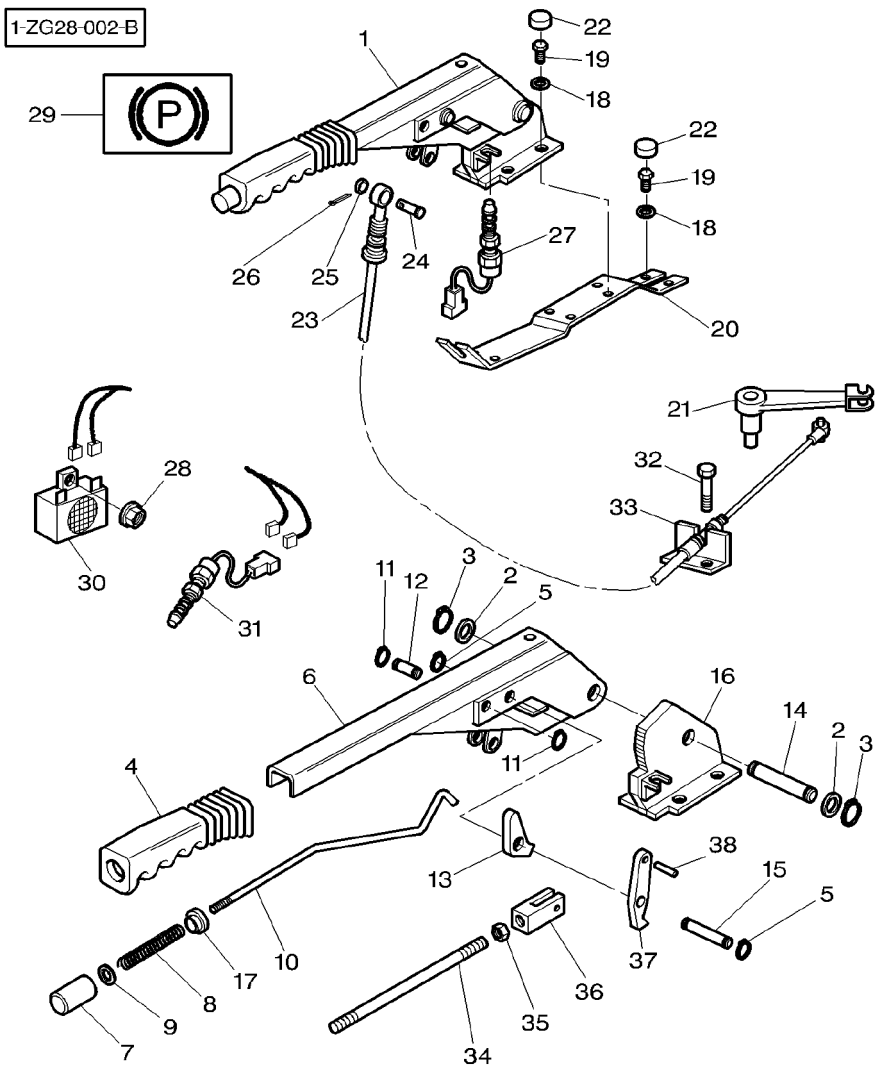

22	3616277M1		
23	3778741M2	[A] ◀▶	1570MM
23	3780289M1	[B] ◀▶	
24	195234M1		
25	390972X1		
26	354057X1		
27	***3780395M2***		
28	3010477X1	M5	
29	3580502M1		
30	3320197M1		
31	***3780395M2***		
32	339228X1	M8X12	
33	3716543M1		
34	3782646M1	1 [B] ➡	H091015
35	3782647M1	1 [B] ➡	H091015
36	3782648M1	1 [B] ➡	H091015
37	3782645M1	1 [B] ➡	H091015
38	3782649M1	1 [B] ➡	H091015

[A] WITH CAB
AVEC CABINE
MIT KABINE
CON CABINA
CON CABINA

[B] TRACTOR WITH PLATFORM
TRACTEUR AVEC PLATEFORME
SCHLEPPER MIT PLATTFORM
TRATTORE CON PIATTAFORMA
TRACTOR CON PLATAFORMA

8	HELMET	CAPUCHON CASCO	SCHUTZHELM CASCO
1	CABLE	CABLE CAVO	KABEL CABLE
1	HANDBRAKE CABLE	CABLE FR.A MAIN CAVO FRENO MANO	HANDBREMSEKABEL CABLE FRENO MANO
1	CLEVIS PIN	AXE PERNO D'ATTACCO	SPLINTBOLZEN BULON CILINDRICO
1	WASHER METRIC	RONDELLE METR. RONDELLA METRICO	SCHEIBE METRISCH ARANDELA METRICO
1	PIN	GOUPILLE PERNO	BOLZEN PASADOR
1	SWITCH,INDIRECT	CONTACTEUR INTERRUTTORE IND	KONTAKTSCHALTER CONTACTOR
1	NUT METRIC	ECROU METRIQUE DADO METRICO	MUTTER METRISCH TUERCA METRICO
1	DECAL	DECALCOMANIE DECALCOMANIA	AUFKLEBER CALCOMANIA
1	BUZZER	VIBREUR CICALINO	SUMMER ZUMBADOR
1	SWITCH,INDIRECT	CONTACTEUR INTERRUTTORE IND	KONTAKTSCHALTER CONTACTOR
2	SCREW METRIC	VIS METRIQUE VITE METRICA	SCHRAUBE METR TORNILLO METRICO
1	SUPPORT	SUPPORT SUPPORTO	LAGERUNG DISPOS.DE SOSTEN
1	ROD	TRINGLE ASTA	STANGE VARILLA
1	NUT	ECROU DADO	MUTTER TUERCA
1	CLEVIS	CHAPE GANCIO D'ATTACCO	GABELSTUECK GANCHO SEGURI.
1	HASP	LOQUET LUCCHETTO	DREHRIEGEL ALDABA
1	PIN	GOUPILLE PERNO	BOLZEN PASADOR

1-ZG02-002-B

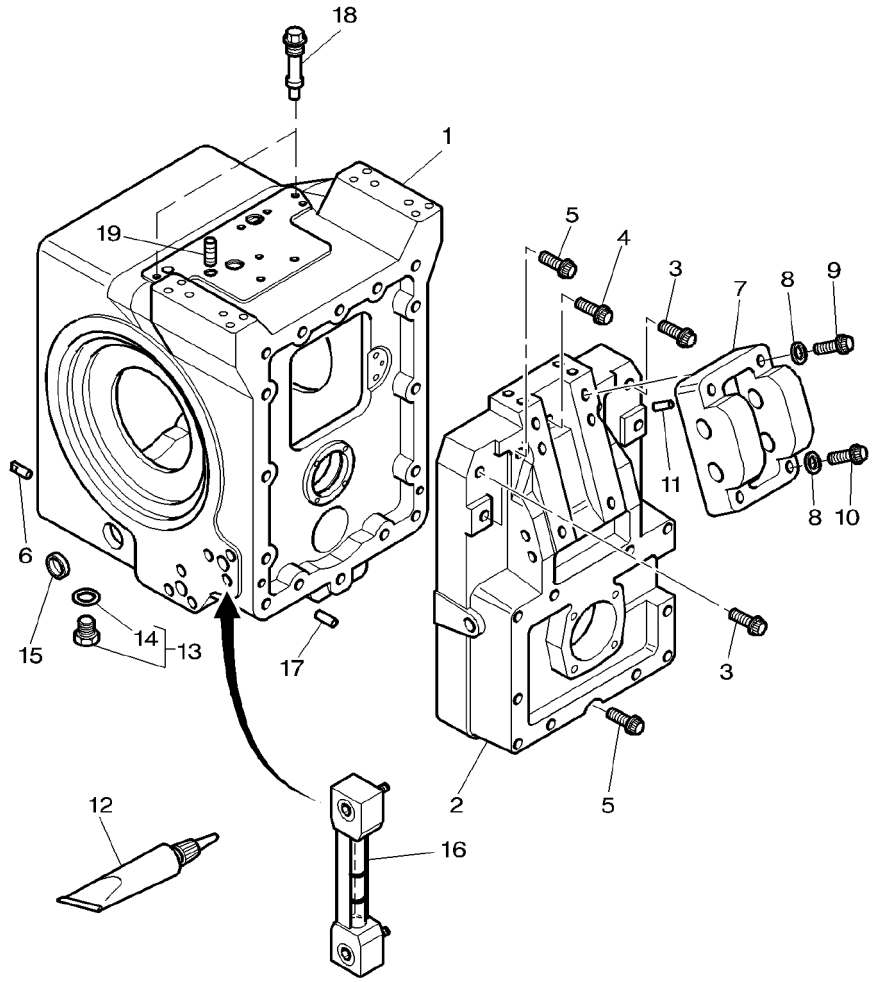

1	3792105M3	➡| 14−OCT−2000	1	HOUSING	CARTER CARCASSA	GEHAEUSE ALOJAMIENTO
1	3794374M1	|➡ 15−OCT−2000	1	HOUSING	CARTER CARCASSA	GEHAEUSE ALOJAMIENTO
2	3716000M5			1	HOUSING	CARTER CARCASSA	GEHAEUSE ALOJAMIENTO
3	3010556X1	M20X70		4	SCREW METRIC	VIS METRIQUE VITE METRICA	SCHRAUBE METR TORNILLO METRICO
4	3010557X1	M20X100		1	SCREW METRIC	VIS METRIQUE VITE METRICA	SCHRAUBE METR TORNILLO METRICO
5	3010558X1	M20X120		3	SCREW METRIC	VIS METRIQUE VITE METRICA	SCHRAUBE METR TORNILLO METRICO
6	3716496M2			1	CENTRALISER	PION CENTRALIZZATORE	FUEHRUNGSKORB CENTRALIZADOR
7	3716917M3			1	LUG	OREILLE ORECCHIO	ANSCHWEISSLASCHE ASA
8	385365X1	∅ 20 MM ∅ 37 MM ⧗ 5 MM		4	WASHER	RONDELLE RONDELLA	UNTERLEGSCHEIBE ARANDELA
9	3010575X1	M20X130		2	SCREW	VIS VITE	SCHRAUBE TORNILLO
10	3010563X1	M20X90		2	SCREW	VIS VITE	SCHRAUBE TORNILLO
11	3716918M2			2	CENTRALISER	PION CENTRALIZZATORE	FUEHRUNGSKORB CENTRALIZADOR
12	3900613M2			X	LOCTITE	LOCTITE LOCTITE	LOCTITE LOCTITE
13	3583994M91	M18		1	PLUG	BOUCHON TAPPO	VERSCHL.STOPFEN TAPON
14	3019397X1	13		1	O RING	JOINT TORIQUE ANELLO OR	O−RING JUNTA TORICA
15	3010760X1	∅ 46 MM		2	PLUG	BOUCHON TAPPO	VERSCHL.STOPFEN TAPON
16	3790931M1			1	OIL DIPSTICK	JAUGE D HUILE STECCA OLIO	OELMESSTAB VARILLA NIVEL A
17	3385839M2	◀▶ 22,2 MM		2	PIN	GOUPILLE PERNO	BOLZEN PASADOR
18	3791706M1			2	PLUG	BOUCHON TAPPO	VERSCHL.STOPFEN TAPON
19	3010990X1	M12X12		1	SCREW	VIS VITE	SCHRAUBE TORNILLO

Short Rear Axle Housings **Trompettes Courtes D Essieu Arriere** **Hinterachsgehaeuse,Kurz** **Scatole Riduttori Strette** **Cajas De Eje Trasero Corto**	**Outer Final Drive Gear** **Couronne Reduct.Finale Exterieure** **Endantrieb Aussen** **Corana Esterna** **Pinon Exteriorde Mando Final**	**30-35**	**M.F 8220** **M.F 8220** **M.F 8220** **M.F 8220** **M.F 8220**

1-ZG20-004-B

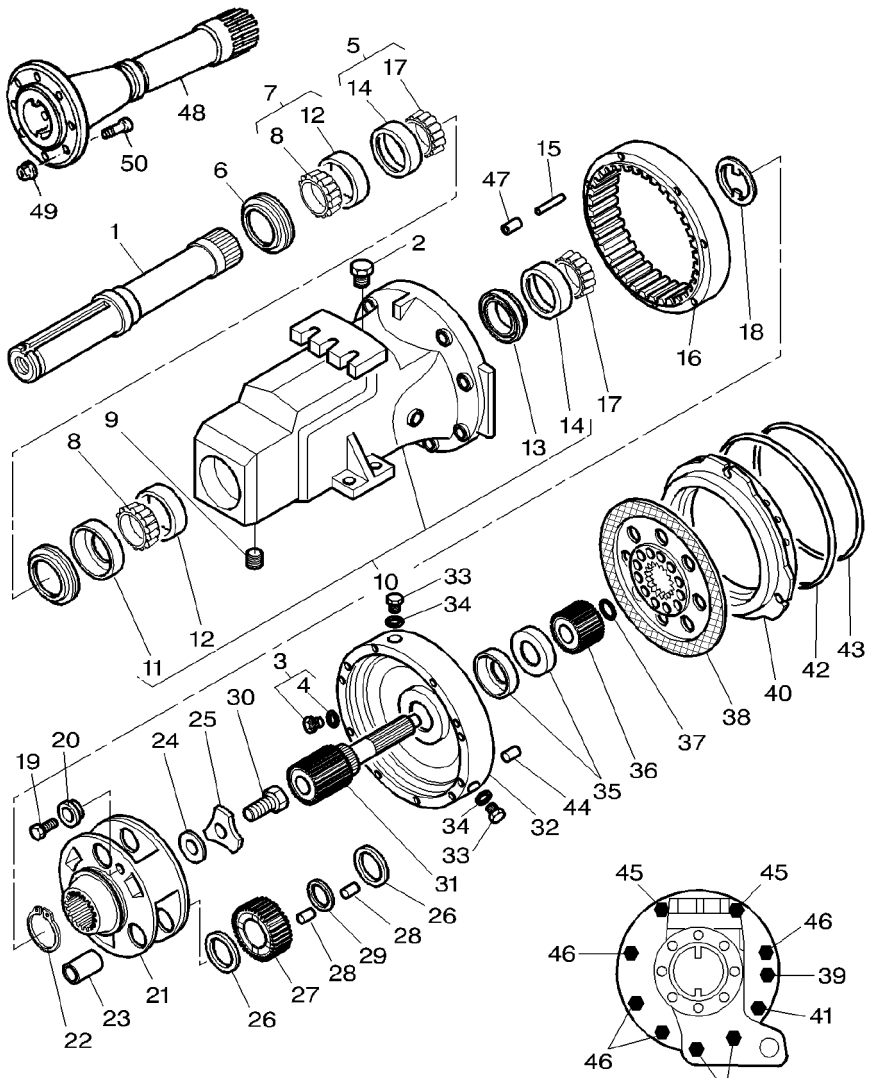

1	3581074M2	[C] 09-OCT-2000 30 828,5 MM	**2**	SHAFT	ARBRE ALBERO	WELLE ARBOL
1	3794041M1	[D] 10-OCT-2000 30 828,5 MM	**2**	SHAFT	ARBRE ALBERO	WELLE ARBOL
1	3581075M2	[C] 09-OCT-2000 30 1150 MM	**2**	SHAFT	ARBRE ALBERO	WELLE ARBOL
1	3794042M1	[D] 10-OCT-2000 30 1150 MM	**2**	SHAFT	ARBRE ALBERO	WELLE ARBOL
2	3619001M1		**2**	BREATHER	RENIFLARD SFIATATOIO	ENTLUEFTER RESPIRADERO
3	3019635X91		**2**	PLUG	BOUCHON TAPPO	VERSCHL.STOPFEN TAPON
4	3019393X1	3	**1**	O RING	JOINT TORIQUE ANELLO OR	O-RING JUNTA TORICA
5	3383709M1		**2**	BEARING TAPER	ROULEMNT CONIQUE CUSCINETTO CONIC	KEGELLAGER RODAMIENTO CONI
6	3583530M2		**2**	SEAL	JOINT ETANCHEITE PARAOLIO	DICHTRING RETEN
7	3383709M1		**2**	BEARING TAPER	ROULEMNT CONIQUE CUSCINETTO CONIC	KEGELLAGER RODAMIENTO CONI
8		7 REF 7	**1**	CONE	CONE CONO	KONUS CONO
9	355547X1	J159014	**2**	PLUG	BOUCHON TAPPO	VERSCHL.STOPFEN TAPON
9	3795042M1	J159015	**2**	PLUG	BOUCHON TAPPO	VERSCHL.STOPFEN TAPON
10	3580617M12	◀	**1**	AXLE HOUSING	TROMPETTE CARCASSA ASSALE	ACHSGEHAEUSE CAJA DEL EJE
10	3580618M12	▶	**1**	AXLE HOUSING	TROMPETTE CARCASSA ASSALE	ACHSGEHAEUSE CAJA DEL EJE
11	3580619M2	10	**1**	DUST SHIELD	CACHE POUSSIERE PARAPOLVERE*	STAUBDECKEL PLACA PROTECTORA
12		10 REF 7	**1**	RACE	CUVETTE CORSA	LAGERRING PISTA COJINETE
13	3619346M1	10	**1**	SEAL	JOINT ETANCHEITE PARAOLIO	DICHTRING RETEN
14		10 REF 5	**1**	RACE	CUVETTE CORSA	LAGERRING PISTA COJINETE
15	3039014M1	124 MM	**2**	CLEVIS PIN	AXE PERNO D'ATTACCO	SPLINTBOLZEN BULON CILINDRICO
16	3792924M1	73 ⇒ 3383256M4	**2**	ANNULAR GEAR	COURONNE CORONA DENTATA	ZAHNKRANZ ENGRANAJE ANULAR
17		REF 5	**2**	CONE	CONE CONO	KONUS CONO

Short Rear Axle Housings **Trompettes Courtes D Essieu Arriere** **Hinterachsgehaeuse,Kurz** **Scatole Riduttori Strette** **Cajas De Eje Trasero Corto**	**Outer Final Drive Gear** **Couronne Reduct.Finale Exterieure** **Endantrieb Aussen** **Corana Esterna** **Pinon Exteriorde Mando Final**	**30-35**	**M.F 8220** **M.F 8220** **M.F 8220** **M.F 8220** **M.F 8220**

1-ZG20-004-B

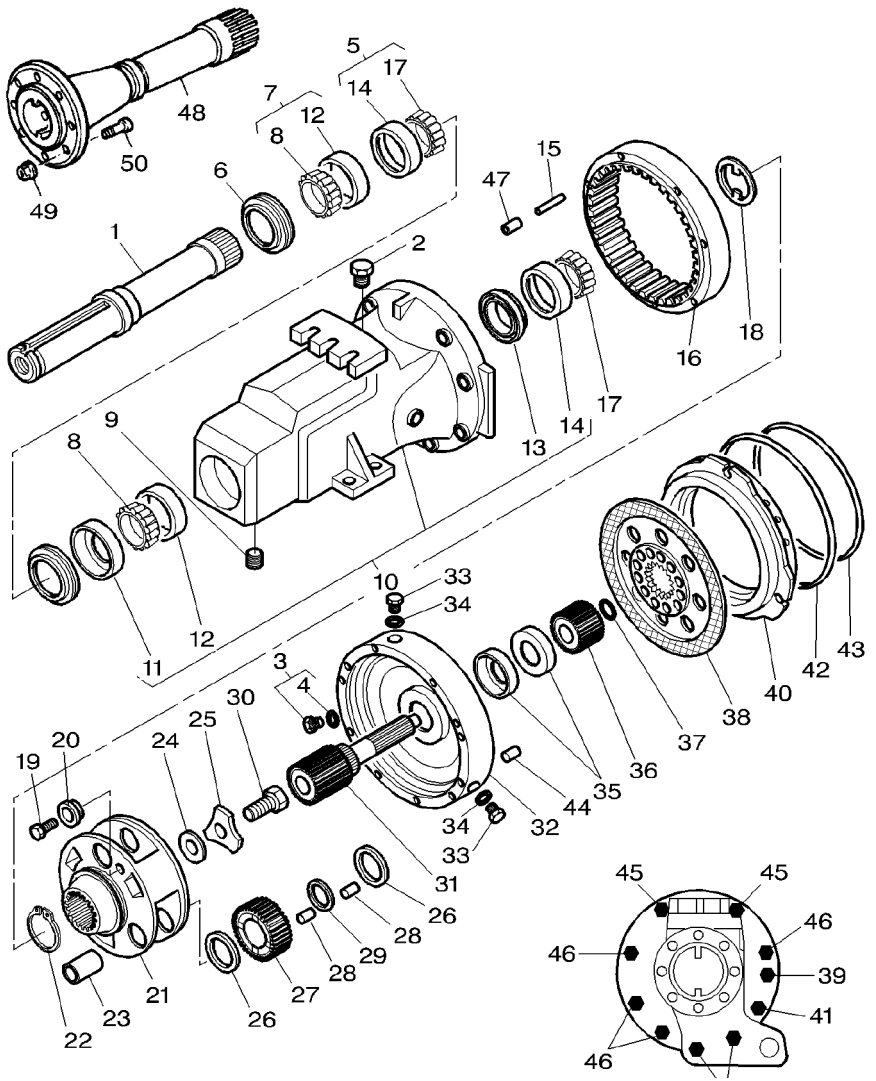

18	3580458M2		**2**	WASHER	RONDELLE RONDELLA	UNTERLEGSCHEIBE ARANDELA
19	353693X1	∅ 3/8"−16 ◀▶ 31,7 MM	**2**	SCREW UNC	VIS UNC VITE UNC	SCHRAUBE UNC TORNILLO UNC
20	3046114M1		**2**	BUSH	BAGUE BOCCOLA	BUCHSE CASQUILLO
21	3581051M1	⛭ 30	**2**	CARRIER	PORTE SATELLITES SUPPORTO SATELL.	TRAEGER PORTADOR
22	3380713M2		**2**	RING	ANNEAU ANELLO	RING ARO
23	1610204M2		**6**	CLEVIS PIN	AXE PERNO D'ATTACCO	SPLINTBOLZEN BULON CILINDRICO
24	519954M1	⧗ 0,05 MM	**X**	SHIM	CALE REGLAGE SPESSORE	EINSTELLBLECH CALCE
24	**519955M1**	⧗ 0,13 MM	**X**	SHIM	CALE REGLAGE SPESSORE	EINSTELLBLECH CALCE
24	519956M1	⧗ 0,25 MM	**X**	SHIM	CALE REGLAGE SPESSORE	EINSTELLBLECH CALCE
24	519957M1	⧗ 0,46 MM	**X**	SHIM	CALE REGLAGE SPESSORE	EINSTELLBLECH CALCE
25	**3580436M1**		**2**	WASHER	RONDELLE RONDELLA	UNTERLEGSCHEIBE ARANDELA
26	**3321291M1**		**12**	SPACER	ENTRETOISE DISTANZIALE	ABSTANDSTUECK PIEZA DISTANCIA
27	3792923M1	⛭ 29 ⇨ 3791386M1	**6**	DIFF PINION	SATELLITE PIGNONE DIFFEREN	DIFF.KEGELRAD PINON DIFERENC
28	**1610191M1**		**336**	NEEDLE	AIGUILLE AGO	NADEL AGUJA
29	1626976M2		**6**	RING	ANNEAU ANELLO	RING ARO
30	3008654X1	M20X45	**2**	SCREW	VIS VITE	SCHRAUBE TORNILLO
31	3792922M1	[A] ⛭ 14 ⇨ 3791384M2 ◀▶ 336MM	**2**	PLANET	PLANETAIRE PLANETARIO	PLANETENRAD PLANETARIO
31	3793082M1	[B] ⛭ 14 ◀ ◀▶ 341MM	**1**	PLANET	PLANETAIRE PLANETARIO	PLANETENRAD PLANETARIO
31	3793083M1	[B] ⛭ 14 ▶ ◀▶ 336MM	**1**	PLANET	PLANETAIRE PLANETARIO	PLANETENRAD PLANETARIO
32	3716936M4	◀	**1**	SPACER	ENTRETOISE DISTANZIALE	ABSTANDSTUECK PIEZA DISTANCIA
32	3716937M4	▶	**1**	SPACER	ENTRETOISE DISTANZIALE	ABSTANDSTUECK PIEZA DISTANCIA
33	3583993M1		**4**	PLUG	BOUCHON TAPPO	VERSCHL.STOPFEN TAPON
34	3019397X1		**4**	O RING	JOINT TORIQUE ANELLO OR	O−RING JUNTA TORICA

Short Rear Axle Housings **Trompettes Courtes D Essieu Arriere** **Hinterachsgehaeuse,Kurz** **Scatole Riduttori Strette** **Cajas De Eje Trasero Corto**	**Outer Final Drive Gear** **Couronne Reduct.Finale Exterieure** **Endantrieb Aussen** **Corana Esterna** **Pinon Exteriorde Mando Final**	**30-35**	**M.F 8220** **M.F 8220** **M.F 8220** **M.F 8220** **M.F 8220**

1-ZG20-004-B

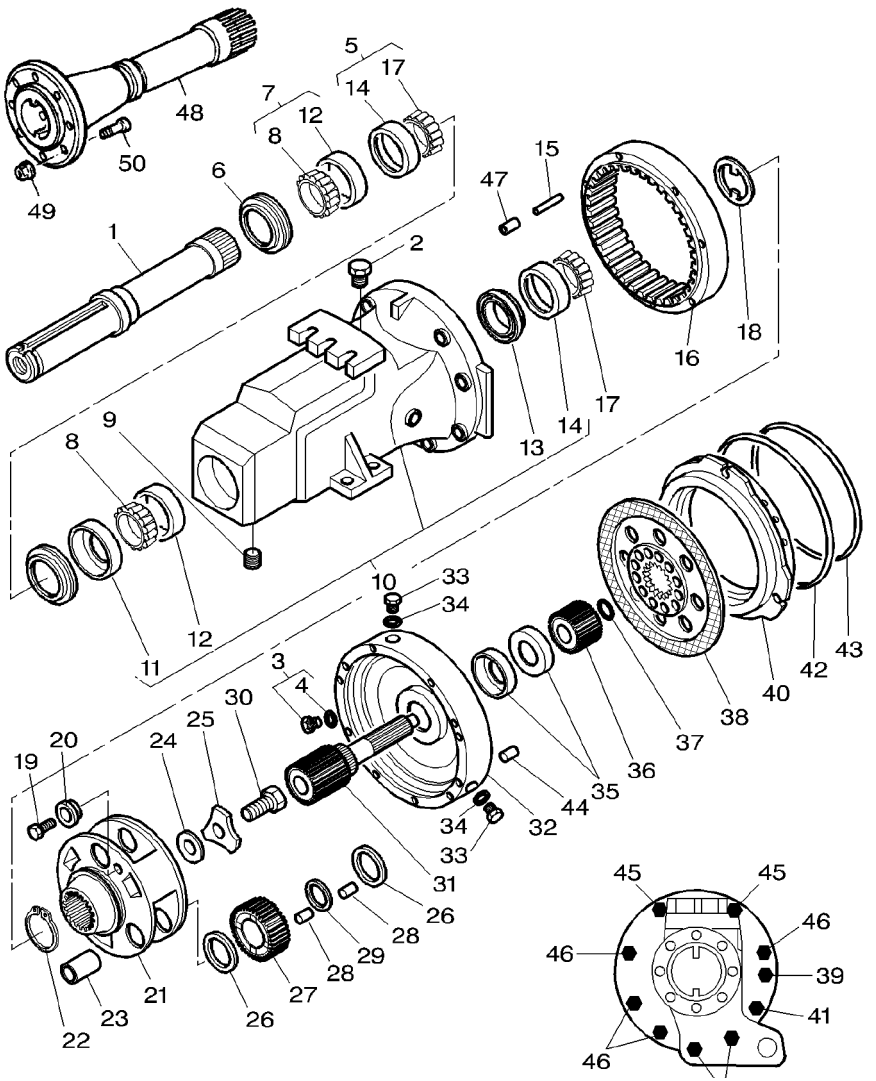

35	3582195M1		
36	3582194M1		
37	380005X1	[A]	
37	380005X1	[B]	
38	3617649M91		
39	354663X1	∅ 1/2"−13	
40	3791208M2		
41	3791438M1	M16x150	
42	3716252M1		
43	3716335M1		
44	3716770M1		
45	3716515M1	M16x205	
45	3010875X1	∅ 16 MM	
45	3019871X1	M16	
46	3010565X1	M16X175	
47	1611422M1	J251025	
48	3583538M2	30 636 MM	
49	**3384597M1**		
50	***3384602M4***	M18X72	
50	***3384601M4***	M18X98	
50	3794694M1	M18X113	

[A] FOR 5" DIFF ONLY
POUR DIFFERENTIEL 5" SEULEMENT
FUR DIFFERENTIAL 5"
USATO SOLO CON DIFFERENZIALE 5"
USAR CON DIFFERENCIAL 5" SOLAMENTE

4	SEAL	JOINT ETANCHEITE PARAOLIO	DICHTRING RETEN
2	HUB	MOYEU MOZZO	NABE CUBO
2	CLIP	CLIP FERMAGLIO	SCHELLE CRAPA RETEN
3	CLIP	CLIP FERMAGLIO	SCHELLE CRAPA RETEN
2	DISC	DISQUE DISCO	SCHEIBE DISCO
2	SCREW	VIS VITE	SCHRAUBE TORNILLO
1	PISTON	PISTON PISTONE	KOLBEN PISTON
2	SCREW	VIS VITE	SCHRAUBE TORNILLO
2	O RING	JOINT TORIQUE ANELLO OR	O−RING JUNTA TORICA
2	O RING	JOINT TORIQUE ANELLO OR	O−RING JUNTA TORICA
6	CLEVIS PIN	AXE PERNO D'ATTACCO	SPLINTBOLZEN BULON CILINDRICO
4	STUD	GOUJON PRIGIONIERO	STEHBOLZEN ESPARRAGO
4	WASHER	RONDELLE RONDELLA	UNTERLEGSCHEIBE ARANDELA
4	NUT METRIC	ECROU METRIQUE DADO METRICO	MUTTER METRISCH TUERCA METRICO
12	SCREW METRIC	VIS METRIQUE VITE METRICA	SCHRAUBE METR TORNILLO METRICO
2	BUSH	BAGUE BOCCOLA	BUCHSE CASQUILLO
2	SHAFT	ARBRE ALBERO	WELLE ARBOL
16	NUT	ECROU DADO	MUTTER TUERCA
16	STUD	GOUJON PRIGIONIERO	STEHBOLZEN ESPARRAGO
16	STUD	GOUJON PRIGIONIERO	STEHBOLZEN ESPARRAGO
16	STUD	GOUJON PRIGIONIERO	STEHBOLZEN ESPARRAGO

Short Rear Axle Housings **Trompettes Courtes D Essieu Arriere** **Hinterachsgehaeuse,Kurz** **Scatole Riduttori Strette** **Cajas De Eje Trasero Corto**	**Outer Final Drive Gear** **Couronne Reduct.Finale Exterieure** **Endantrieb Aussen** **Corana Esterna** **Pinon Exteriorde Mando Final**	**30-35**	**M.F 8220** **M.F 8220** **M.F 8220** **M.F 8220** **M.F 8220**

1-ZG20-004-B

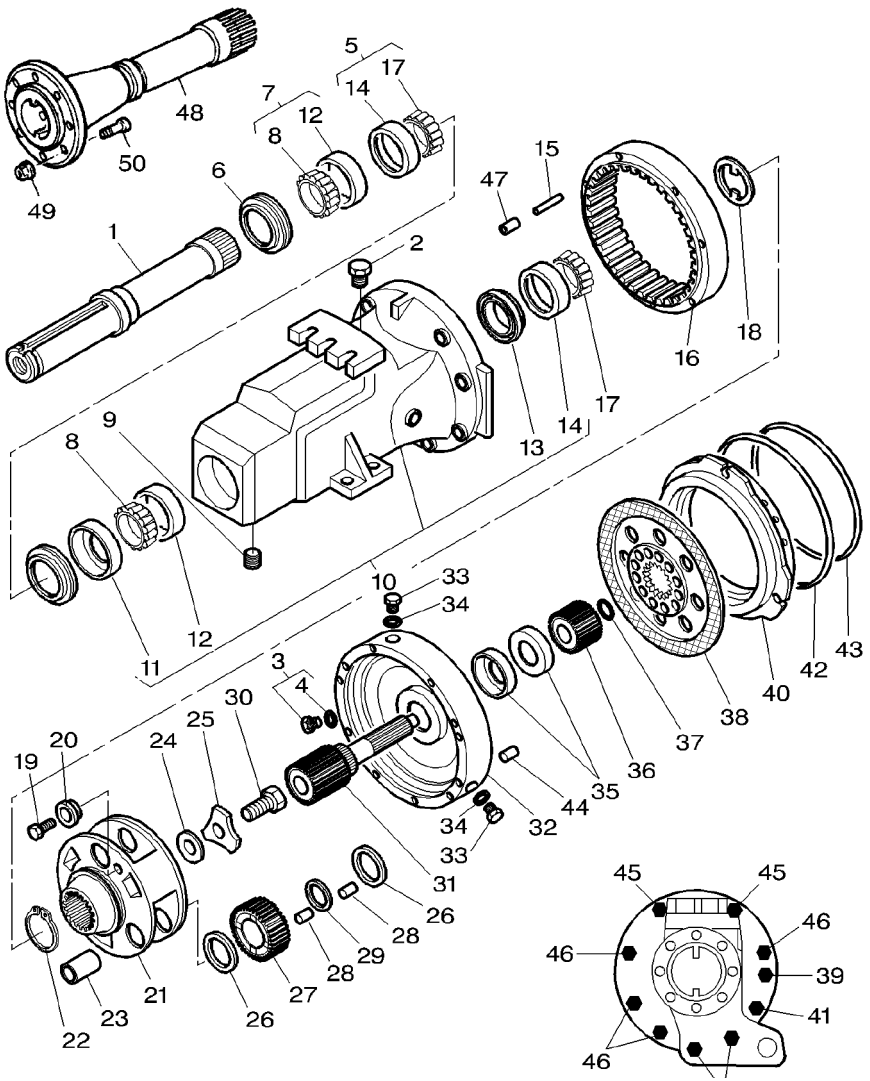

[B] FOR 7" DIFF ONLY
POUR DIFFERENTIEL 7" SEULEMENT
FUER DIFFERENTIAL 7"
USATO SOLO CON DIFFERENZIALE 7"
USAR CON DIFFERENCIAL 7" SOLAMENTE

[C] RECTANGULAR KEY
CLAVETTE RECTANGULAIRE
PASSKEIL RECHTECKIG
CHIAVETTA RETTANGOLARE
CLAVE RECTANGULAR

[D] HEXAGONAL KEY
CLAVETTE HEXAGONALE
PASSKEIL SECHSECKIG
CHIAVETTA ESAGONALE
CLAVE HEXAGONAL

Short Rear Axle Housings
Trompettes Courtes D Essieu Arriere
Hinterachsgehaeuse,Kurz
Scatole Riduttori Strette
Cajas De Eje Trasero Corto

Outer Final Drive Gear
Couronne Reduct.Finale Exterieure
Endantrieb Aussen
Corana Esterna
Pinon Exteriorde Mando Final

30-40

Shaft Diameter 95mm
Arbre Diametre 95mm
Durchmesserwelle 95mm
Albero Diametro 95mm
Palier Diametro 95mm

1-ZG20-002-B

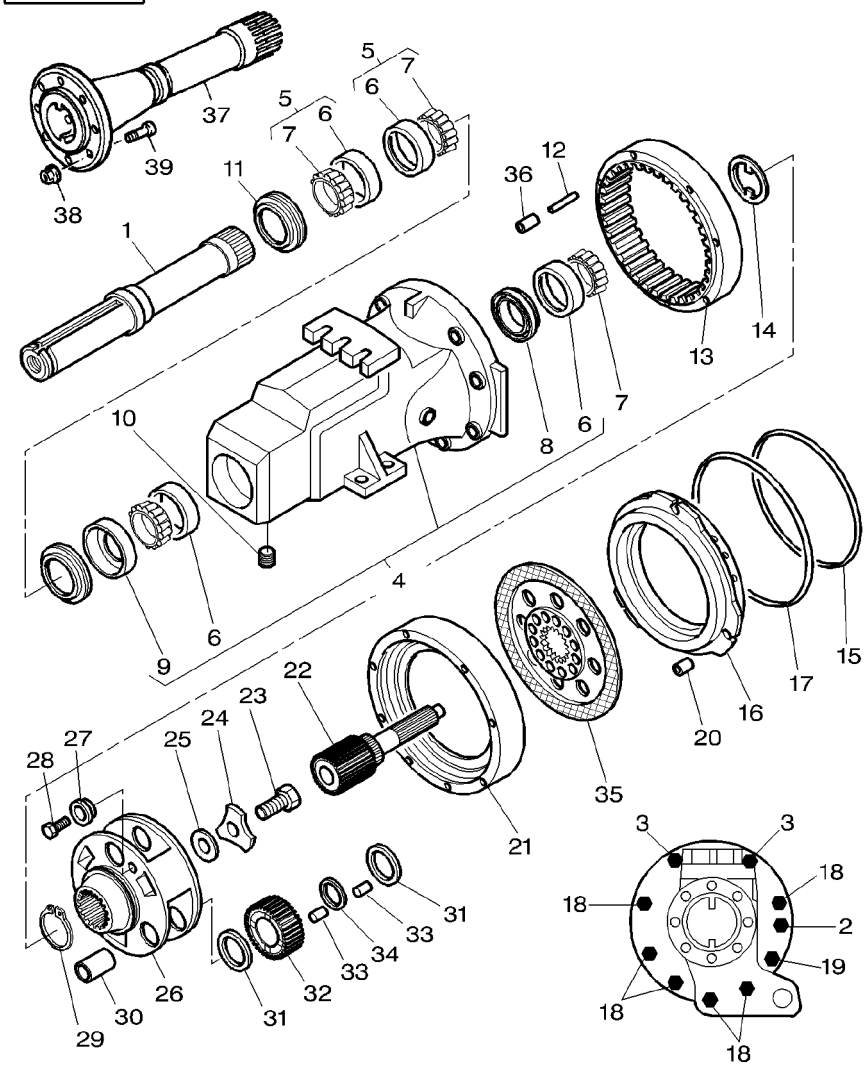

1	3581074M2	[A] 09−OCT−2000 30 828,5 MM	2	SHAFT	ARBRE ALBERO	WELLE ARBOL
1	3794041M1	[B] 10−OCT−2000 30 828,5 MM	2	SHAFT	ARBRE ALBERO	WELLE ARBOL
1	3581075M2	[A] 09−OCT−2000 30 1150 MM	2	SHAFT	ARBRE ALBERO	WELLE ARBOL
1	3794042M1	[B] 10−OCT−2000 30 1150 MM	2	SHAFT	ARBRE ALBERO	WELLE ARBOL
2	354663X1	∅ 1/2"−13 101 MM	2	SCREW	VIS VITE	SCHRAUBE TORNILLO
3	3716514M1	M16x195	4	STUD	GOUJON PRIGIONIERO	STEHBOLZEN ESPARRAGO
3	3010875X1	∅ 16 MM	4	WASHER	RONDELLE RONDELLA	UNTERLEGSCHEIBE ARANDELA
3	3019871X1	M16	4	NUT METRIC	ECROU METRIQUE DADO METRICO	MUTTER METRISCH TUERCA METRICO
4	3790048M12	◀	1	AXLE HOUSING	TROMPETTE CARCASSA ASSALE	ACHSGEHAEUSE CAJA DEL EJE
4	3790049M11	▶	1	AXLE HOUSING	TROMPETTE CARCASSA ASSALE	ACHSGEHAEUSE CAJA DEL EJE
5	3383709M1		4	BEARING TAPER	ROULEMNT CONIQUE CUSCINETTO CONIC	KEGELLAGER RODAMIENTO CONI
6		5 REF 5	1	RACE	CUVETTE CORSA	LAGERRING PISTA COJINETE
7		5 REF 5	2	CONE	CONE CONO	KONUS CONO
8	3619346M1	4	1	SEAL	JOINT ETANCHEITE PARAOLIO	DICHTRING RETEN
9	3580619M2	4	1	DUST SHIELD	CACHE POUSSIERE PARAPOLVERE*	STAUBDECKEL PLACA PROTECTORA
10	355547X1	J159014	2	PLUG	BOUCHON TAPPO	VERSCHL.STOPFEN TAPON
10	3795042M1	J159015	2	PLUG	BOUCHON TAPPO	VERSCHL.STOPFEN TAPON
11	3583530M2		2	SEAL	JOINT ETANCHEITE PARAOLIO	DICHTRING RETEN
12	3380806M1	113,5 MM	2	CLEVIS PIN	AXE PERNO D'ATTACCO	SPLINTBOLZEN BULON CILINDRICO
13	3792924M1	73 ⇨ 3383256M4	2	ANNULAR GEAR	COURONNE CORONA DENTATA	ZAHNKRANZ ENGRANAJE ANULAR
14	3580458M2		2	WASHER	RONDELLE RONDELLA	UNTERLEGSCHEIBE ARANDELA
15	3716335M1		2	O RING	JOINT TORIQUE ANELLO OR	O−RING JUNTA TORICA

Short Rear Axle Housings
Trompettes Courtes D Essieu Arriere
Hinterachsgehaeuse,Kurz
Scatole Riduttori Strette
Cajas De Eje Trasero Corto

Outer Final Drive Gear
Couronne Reduct.Finale Exterieure
Endantrieb Aussen
Corana Esterna
Pinon Exteriorde Mando Final

30-40

Shaft Diameter 95mm
Arbre Diametre 95mm
Durchmesserwelle 95mm
Albero Diametro 95mm
Palier Diametro 95mm

1-ZG20-002-B

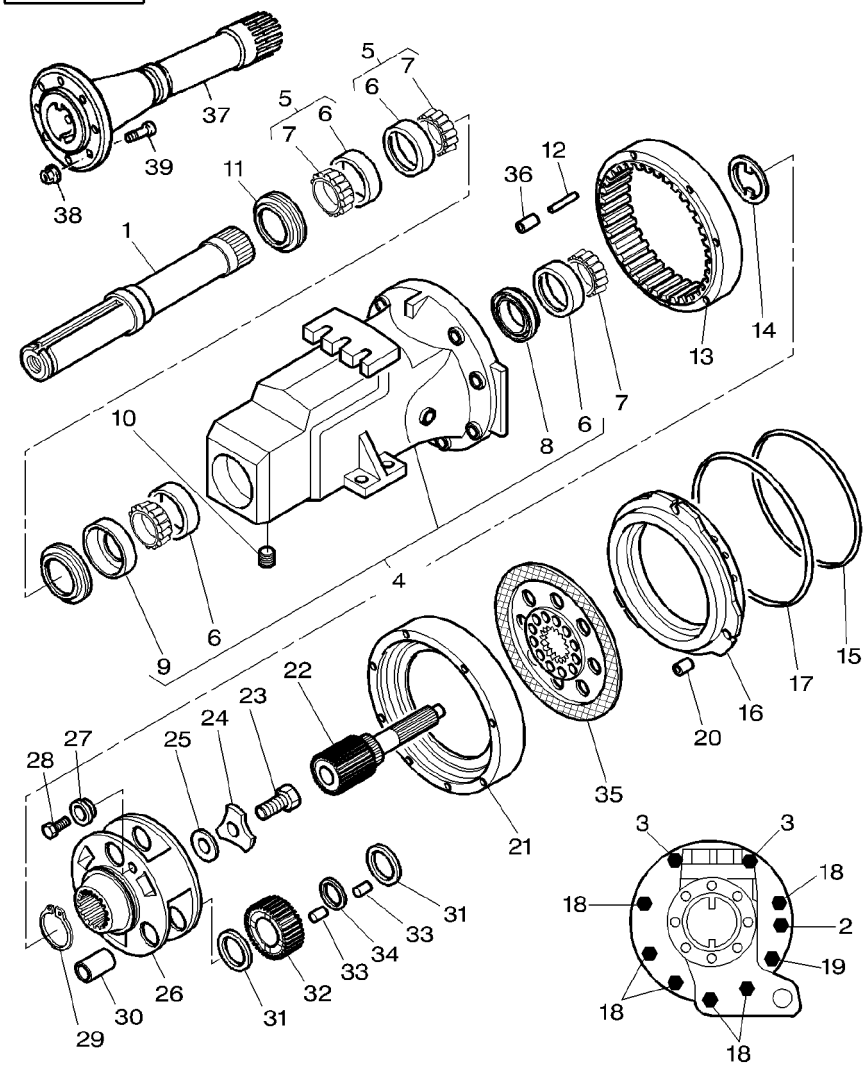

16	3716758M3		**2**	PISTON	PISTON PISTONE	KOLBEN PISTON
17	3716252M1		**2**	O RING	JOINT TORIQUE ANELLO OR	O−RING JUNTA TORICA
18	3019905X1	M16x165	**12**	BOLT METRIC	BOULON METRIQUE BULLONE METRICO	MASCH.SCHRB MET PERNO METRICO
19	3019901X1	M16x140	**2**	SCREW METRIC	VIS METRIQUE VITE METRICA	SCHRAUBE METR TORNILLO METRICO
20	3716770M1		**6**	CLEVIS PIN	AXE PERNO D'ATTACCO	SPLINTBOLZEN BULON CILINDRICO
21	3716082M4	◀	**1**	SPACER	ENTRETOISE DISTANZIALE	ABSTANDSTUECK PIEZA DISTANCIA
21	3716083M3	▶	**1**	SPACER	ENTRETOISE DISTANZIALE	ABSTANDSTUECK PIEZA DISTANCIA
22	**3052952M6**	14	**2**	PLANET	PLANETAIRE PLANETARIO	PLANETENRAD PLANETARIO
23	3008654X1	M20x45	**2**	SCREW	VIS VITE	SCHRAUBE TORNILLO
24	**3580436M1**		**2**	WASHER	RONDELLE RONDELLA	UNTERLEGSCHEIBE ARANDELA
25	519954M1	0,05 MM	**X**	SHIM	CALE REGLAGE SPESSORE	EINSTELLBLECH CALCE
25	**519955M1**	0,13 MM	**X**	SHIM	CALE REGLAGE SPESSORE	EINSTELLBLECH CALCE
25	519956M1	0,25 MM	**X**	SHIM	CALE REGLAGE SPESSORE	EINSTELLBLECH CALCE
25	519957M1	0,46 MM	**X**	SHIM	CALE REGLAGE SPESSORE	EINSTELLBLECH CALCE
26	3581051M1	30	**2**	CARRIER	PORTE SATELLITES SUPPORTO SATELL.	TRAEGER PORTADOR
27	3046114M1		**2**	BUSH	BAGUE BOCCOLA	BUCHSE CASQUILLO
28	353693X1	∅ 3/8"−16 ◀▶ 31,7 MM	**2**	SCREW UNC	VIS UNC VITE UNC	SCHRAUBE UNC TORNILLO UNC
29	3380713M2		**2**	RING	ANNEAU ANELLO	RING ARO
30	1610204M2		**6**	CLEVIS PIN	AXE PERNO D'ATTACCO	SPLINTBOLZEN BULON CILINDRICO
31	**3321291M1**		**12**	SPACER	ENTRETOISE DISTANZIALE	ABSTANDSTUECK PIEZA DISTANCIA
32	3792923M1	29 ⇨ 3791386M1	**6**	DIFF PINION	SATELLITE PIGNONE DIFFEREN	DIFF.KEGELRAD PINON DIFERENC
33	**1610191M1**		**336**	NEEDLE	AIGUILLE AGO	NADEL AGUJA
34	1626976M2		**6**	RING	ANNEAU ANELLO	RING ARO
35	3617649M91		**2**	DISC	DISQUE DISCO	SCHEIBE DISCO
36	1611422M1	J251025	**2**	BUSH	BAGUE BOCCOLA	BUCHSE CASQUILLO
37	3583538M2	30 ◀▶ 636 MM	**2**	SHAFT	ARBRE ALBERO	WELLE ARBOL

Short Rear Axle Housings **Trompettes Courtes D Essieu Arriere** **Hinterachsgehaeuse,Kurz** **Scatole Riduttori Strette** **Cajas De Eje Trasero Corto**	**Outer Final Drive Gear** **Couronne Reduct.Finale Exterieure** **Endantrieb Aussen** **Corana Esterna** **Pinon Exteriorde Mando Final**	**30-40**	**Shaft Diameter 95mm** **Arbre Diametre 95mm** **Durchmesserwelle 95mm** **Albero Diametro 95mm** **Palier Diametro 95mm**

1-ZG20-002-B

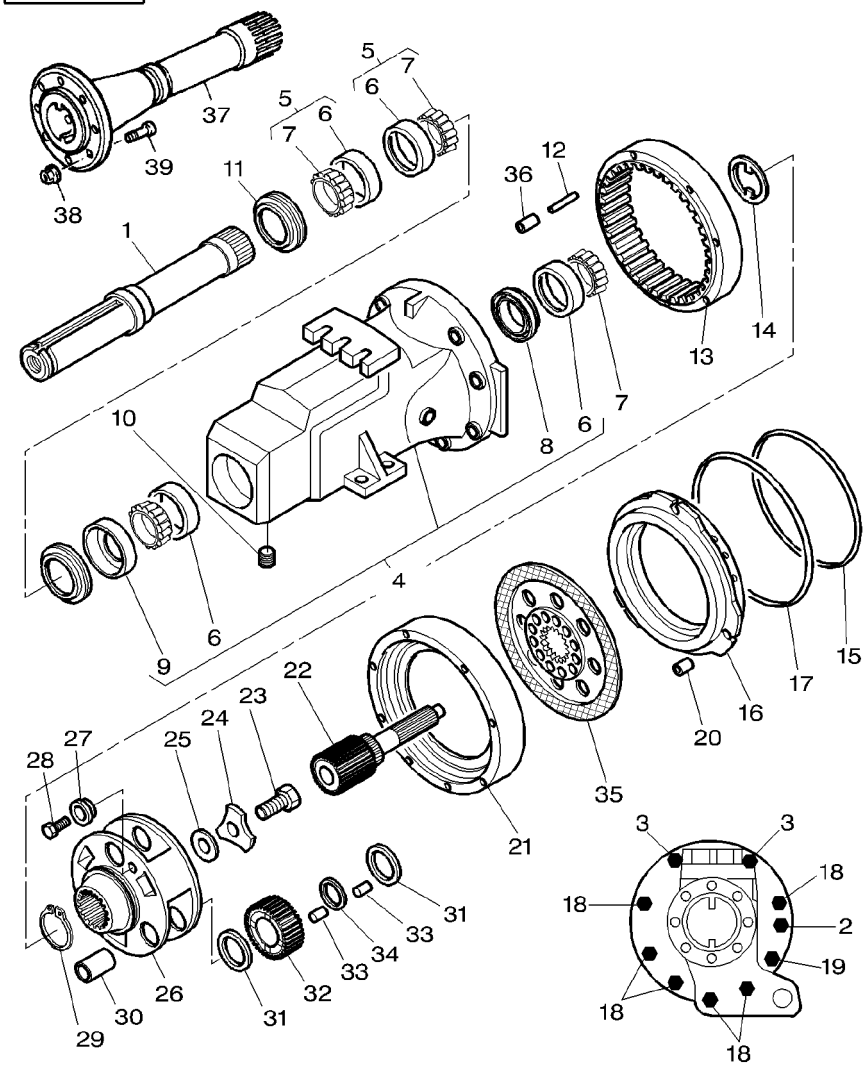

38	**3384597M1**		**16**	NUT	ECROU DADO	MUTTER TUERCA
39	***3384602M4***	M18X72	**16**	STUD	GOUJON PRIGIONIERO	STEHBOLZEN ESPARRAGO
39	***3384601M4***	M18X98	**16**	STUD	GOUJON PRIGIONIERO	STEHBOLZEN ESPARRAGO
39	3794694M1	◀▶ M18X113	**16**	STUD	GOUJON PRIGIONIERO	STEHBOLZEN ESPARRAGO

[A] RECTANGULAR KEY
CLAVETTE RECTANGULAIRE
PASSKEIL RECHTECKIG
CHIAVETTA RETTANGOLARE
CLAVE RECTANGULAR

[B] HEXAGONAL KEY
CLAVETTE HEXAGONALE
PASSKEIL SECHSECKIG
CHIAVETTA ESAGONALE
CLAVE HEXAGONAL

Short Rear Axle Housings
Trompettes Courtes D Essieu Arriere
Hinterachsgehaeuse,Kurz
Scatole Riduttori Strette
Cajas De Eje Trasero Corto

Outer Final Drive Gear
Couronne Reduct.Finale Exterieure
Endantrieb Aussen
Corana Esterna
Pinon Exteriorde Mando Final

30-45

1-ZG20-001-B

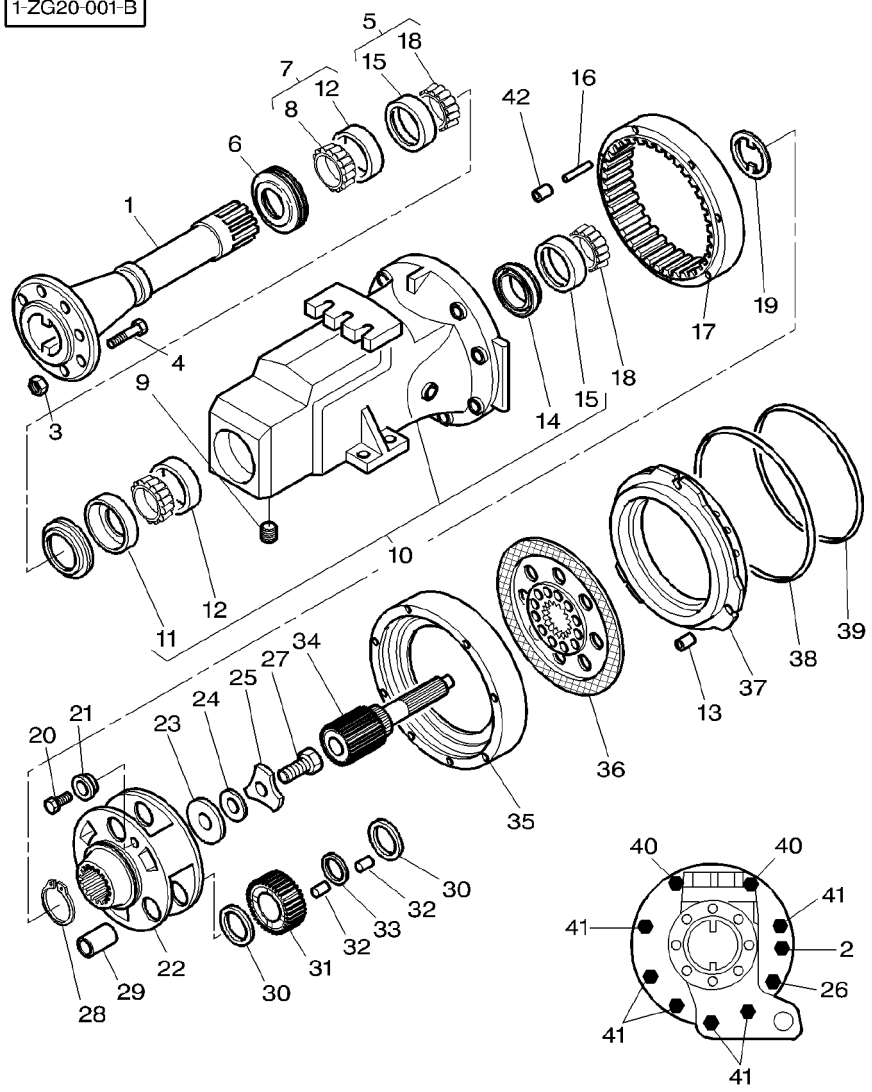

1	3583727M3	31 ∅ 82 MM		2	SHAFT	ARBRE ALBERO	WELLE ARBOL
2	354663X1	∅ 1/2"–13 ◀▶ 101 MM		2	SCREW	VIS VITE	SCHRAUBE TORNILLO
3	**3384597M1**			16	NUT	ECROU DADO	MUTTER TUERCA
4	***3384601M4***	M18X1,5X98		16	STUD	GOUJON PRIGIONIERO	STEHBOLZEN ESPARRAGO
4	***3384602M4***	M18X1,5X72		16	STUD	GOUJON PRIGIONIERO	STEHBOLZEN ESPARRAGO
4	3794694M1	M18X1,5X113		16	STUD	GOUJON PRIGIONIERO	STEHBOLZEN ESPARRAGO
5	3383712M1			2	BEARING TAPER	ROULEMNT CONIQUE CUSCINETTO CONIC	KEGELLAGER RODAMIENTO CONI
6	3583530M2			2	SEAL	JOINT ETANCHEITE PARAOLIO	DICHTRING RETEN
7	3383714M1			2	BEARING TAPER	ROULEMNT CONIQUE CUSCINETTO CONIC	KEGELLAGER RODAMIENTO CONI
8		7 REF 7		1	CONE	CONE CONO	KONUS CONO
9	355547X1	J159014		2	PLUG	BOUCHON TAPPO	VERSCHL.STOPFEN TAPON
9	3795042M1	J159015		2	PLUG	BOUCHON TAPPO	VERSCHL.STOPFEN TAPON
10	3583509M12	◀		1	AXLE HOUSING	TROMPETTE CARCASSA ASSALE	ACHSGEHAEUSE CAJA DEL EJE
10	3583510M12	▶		1	AXLE HOUSING	TROMPETTE CARCASSA ASSALE	ACHSGEHAEUSE CAJA DEL EJE
11	3580619M2	10		1	DUST SHIELD	CACHE POUSSIERE PARAPOLVERE*	STAUBDECKEL PLACA PROTECTORA
12		7 REF 7		1	RACE	CUVETTE CORSA	LAGERRING PISTA COJINETE
13	3716770M1			6	CLEVIS PIN	AXE PERNO D'ATTACCO	SPLINTBOLZEN BULON CILINDRICO
14	3619345M1	10		1	SEAL	JOINT ETANCHEITE PARAOLIO	DICHTRING RETEN
15		5 REF 5		1	RACE	CUVETTE CORSA	LAGERRING PISTA COJINETE
16	3380806M1	◀▶ 113,5 MM		2	CLEVIS PIN	AXE PERNO D'ATTACCO	SPLINTBOLZEN BULON CILINDRICO
17	3792924M1	73 ⇒ 3383256M4		2	ANNULAR GEAR	COURONNE CORONA DENTATA	ZAHNKRANZ ENGRANAJE ANULAR
18		5 REF 5		2	CONE	CONE CONO	KONUS CONO
19	3052650M1			2	WASHER	RONDELLE RONDELLA	UNTERLEGSCHEIBE ARANDELA
20	353693X1	∅ 3/8"–16 ◀▶ 31,7 MM		2	SCREW UNC	VIS UNC VITE UNC	SCHRAUBE UNC TORNILLO UNC
21	3046114M1			2	BUSH	BAGUE BOCCOLA	BUCHSE CASQUILLO
22	3052926M5	31		2	CARRIER	PORTE SATELLITES SUPPORTO SATELL.	TRAEGER PORTADOR

Short Rear Axle Housings
Trompettes Courtes D Essieu Arriere
Hinterachsgehaeuse,Kurz
Scatole Riduttori Strette
Cajas De Eje Trasero Corto

Outer Final Drive Gear
Couronne Reduct.Finale Exterieure
Endantrieb Aussen
Corana Esterna
Pinon Exteriorde Mando Final

30-45

1-ZG20-001-B

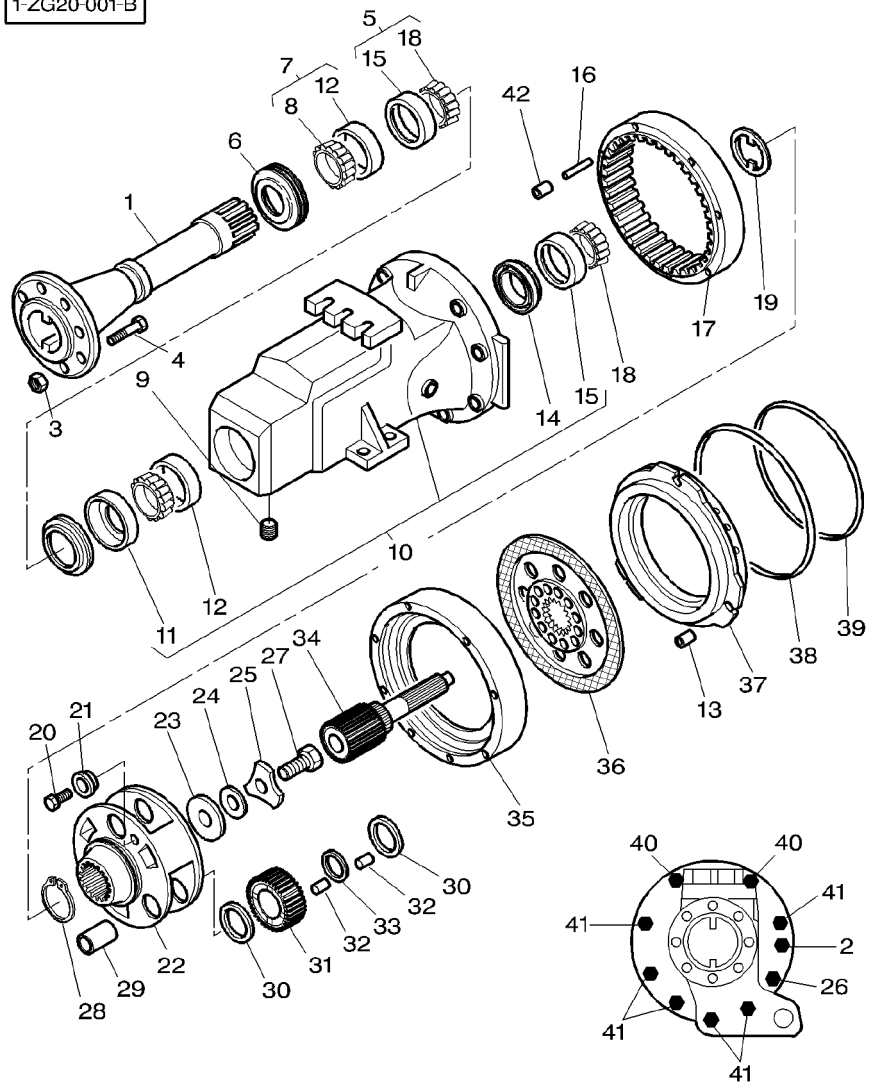

23	3381258M1		**2**	WASHER	RONDELLE RONDELLA	UNTERLEGSCHEIBE ARANDELA
24	519954M1	⧗ 0,05 MM	**X**	SHIM	CALE REGLAGE SPESSORE	EINSTELLBLECH CALCE
24	**519955M1**	⧗ 0,13 MM	**X**	SHIM	CALE REGLAGE SPESSORE	EINSTELLBLECH CALCE
24	519956M1	⧗ 0,25 MM	**X**	SHIM	CALE REGLAGE SPESSORE	EINSTELLBLECH CALCE
24	519957M1	⧗ 0,46 MM	**X**	SHIM	CALE REGLAGE SPESSORE	EINSTELLBLECH CALCE
25	**3580436M1**		**2**	WASHER	RONDELLE RONDELLA	UNTERLEGSCHEIBE ARANDELA
26	3019901X1	M16x140	**2**	SCREW METRIC	VIS METRIQUE VITE METRICA	SCHRAUBE METR TORNILLO METRICO
27	354708X1	∅ 3/4"–10 ◂▸ 44,4 MM	**2**	SCREW UNC	VIS UNC VITE UNC	SCHRAUBE UNC TORNILLO UNC
28	3380713M2		**2**	RING	ANNEAU ANELLO	RING ARO
29	1610204M2		**6**	CLEVIS PIN	AXE PERNO D'ATTACCO	SPLINTBOLZEN BULON CILINDRICO
30	**3321291M1**		**12**	SPACER	ENTRETOISE DISTANZIALE	ABSTANDSTUECK PIEZA DISTANCIA
31	3792923M1	29 ⇨ 3791386M1	**6**	DIFF PINION	SATELLITE PIGNONE DIFFEREN	DIFF.KEGELRAD PINON DIFERENC
32	**1610191M1**		**336**	NEEDLE	AIGUILLE AGO	NADEL AGUJA
33	1626976M2		**6**	RING	ANNEAU ANELLO	RING ARO
34	**3052952M6**	14	**2**	PLANET	PLANETAIRE PLANETARIO	PLANETENRAD PLANETARIO
35	3716082M4	◀	**1**	SPACER	ENTRETOISE DISTANZIALE	ABSTANDSTUECK PIEZA DISTANCIA
35	3716083M3	▶	**1**	SPACER	ENTRETOISE DISTANZIALE	ABSTANDSTUECK PIEZA DISTANCIA
36	3617649M91		**2**	DISC	DISQUE DISCO	SCHEIBE DISCO
37	3716758M3		**2**	PISTON	PISTON PISTONE	KOLBEN PISTON
38	3716252M1		**2**	O RING	JOINT TORIQUE ANELLO OR	O–RING JUNTA TORICA
39	3716335M1		**2**	O RING	JOINT TORIQUE ANELLO OR	O–RING JUNTA TORICA
40	3716514M1	M16x195	**4**	STUD	GOUJON PRIGIONIERO	STEHBOLZEN ESPARRAGO
40	3010875X1	∅ 16 MM	**4**	WASHER	RONDELLE RONDELLA	UNTERLEGSCHEIBE ARANDELA
40	3019871X1	M16	**4**	NUT METRIC	ECROU METRIQUE DADO METRICO	MUTTER METRISCH TUERCA METRICO
41	3019905X1	M16x165	**12**	BOLT METRIC	BOULON METRIQUE BULLONE METRICO	MASCH.SCHRB MET PERNO METRICO
42	1611422M1	➡ J251025	**2**	BUSH	BAGUE BOCCOLA	BUCHSE CASQUILLO

Rear Axle	**Differential**	**5" Differential**
Essieu Arriere	**Differentiel**	**Differentiel 5"**
Hinterachse	**Differential**	**Differential 5"**
Assale Posteriore	**Differenziale**	**Differenziale 5"**
Eje Trasero	**Diferencial**	**Differencial 5"**

30-50

1-ZG09-001-B

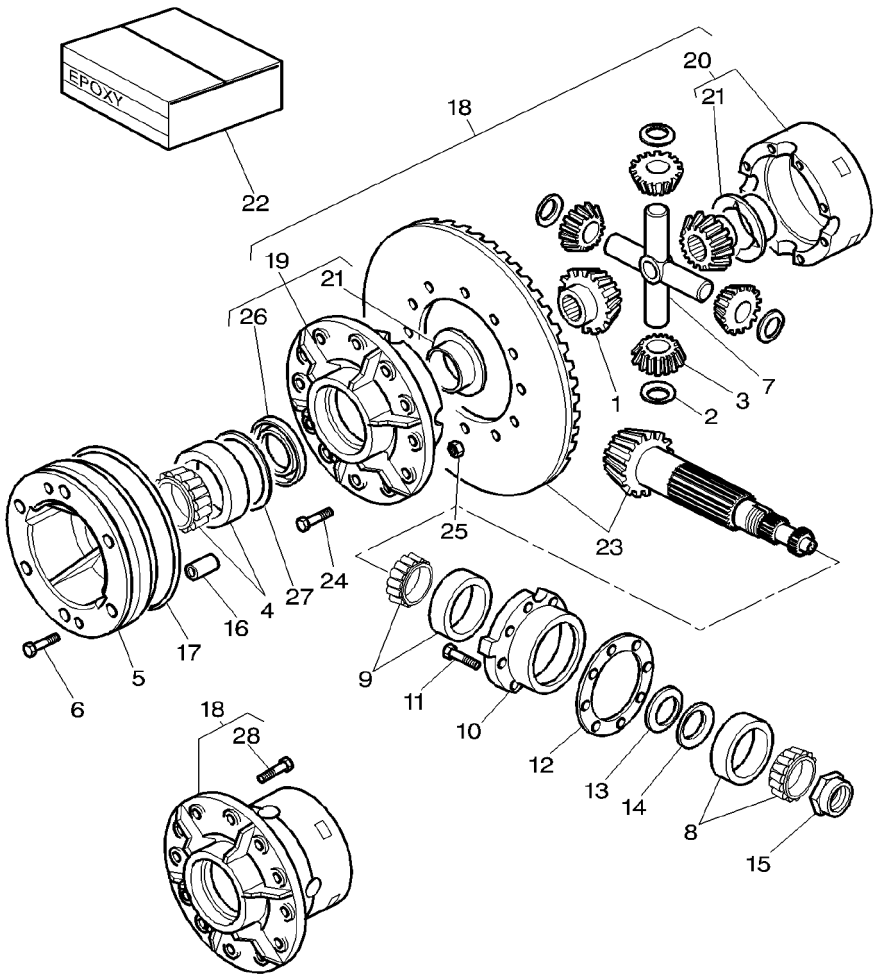

1	885518M5		**2**	GEAR	ENGRENAGE INGRANAGGIO	ZAHNRAD ENGRANAJE
2	3387281M1		**4**	WASHER	RONDELLE RONDELLA	UNTERLEGSCHEIBE ARANDELA
3	2746322M1		**4**	PINION	PIGNON PIGNONE	RITZEL PINON
4	1851533M91		**1**	BEARING ASSY	ROULEMENT CUSCINETTO COMPL	RADIALLAGER RODAMIENTO RAD
5	3716332M4		**1**	SUPPORT	SUPPORT SUPPORTO	LAGERUNG DISPOS.DE SOSTEN
6	3019899X1	M12X50	**6**	BOLT METRIC	BOULON METRIQUE BULLONE METRICO	MASCH.SCHRB MET PERNO METRICO
7	2746135M2		**1**	CROSSPIECE	CROISILLON TRAVERSA	KREUZSTUECK PIEZA TRANSVERSA
8	3010720X91		**1**	BEARING ASSY	ROULEMENT CUSCINETTO COMPL	RADIALLAGER RODAMIENTO RAD
9	3010735X91		**1**	BEARING ASSY	ROULEMENT CUSCINETTO COMPL	RADIALLAGER RODAMIENTO RAD
10	3716430M2		**1**	CASE ASSY	BOITIER CARCASSA COMPLET	GEHAEUSE KPL CAJA COMPLETA
11	3010010X1	M12X40	**4**	SCREW	VIS VITE	SCHRAUBE TORNILLO
11	3010770X1	M12X35	**4**	SCREW METRIC	VIS METRIQUE VITE METRICA	SCHRAUBE METR TORNILLO METRICO
12	3716566M1	⧗ 0,05MM	**X**	SHIM	CALE REGLAGE SPESSORE	EINSTELLBLECH CALCE
12	3716567M1	⧗ 0,1MM	**X**	SHIM	CALE REGLAGE SPESSORE	EINSTELLBLECH CALCE
12	3716568M1	⧗ 0,2MM	**X**	SHIM	CALE REGLAGE SPESSORE	EINSTELLBLECH CALCE
12	3716569M1	⧗ 0,3MM	**X**	SHIM	CALE REGLAGE SPESSORE	EINSTELLBLECH CALCE
13	3716422M1		**1**	WASHER	RONDELLE RONDELLA	UNTERLEGSCHEIBE ARANDELA
14	3792328M2	⧗ 0,65 MM	**X**	CHOCK	CALE PASSACAVO	UNTERLEG-KEIL CALZA
14	3716431M2	⧗ 0,7 MM	**X**	SHIM	CALE REGLAGE SPESSORE	EINSTELLBLECH CALCE
14	3792329M2	⧗ 0,75 MM	**X**	CHOCK	CALE PASSACAVO	UNTERLEG-KEIL CALZA
14	3716432M2	⧗ 0,8 MM	**X**	SHIM	CALE REGLAGE SPESSORE	EINSTELLBLECH CALCE
14	3792330M2	⧗ 0,85 MM	**X**	CHOCK	CALE PASSACAVO	UNTERLEG-KEIL CALZA
14	3716433M2	⧗ 0,9 MM	**X**	SHIM	CALE REGLAGE SPESSORE	EINSTELLBLECH CALCE
14	3792331M2	⧗ 0,95 MM	**X**	CHOCK	CALE PASSACAVO	UNTERLEG-KEIL CALZA
14	3716434M2	⧗ 1 MM	**X**	SHIM	CALE REGLAGE SPESSORE	EINSTELLBLECH CALCE
15	3716450M1	M60	**1**	NUT SPECIAL	ECROU SPECIAL DADO SPECIALE	SPEZIALMUTTER TUERCA ESPECIAL

1-ZG09-001-B

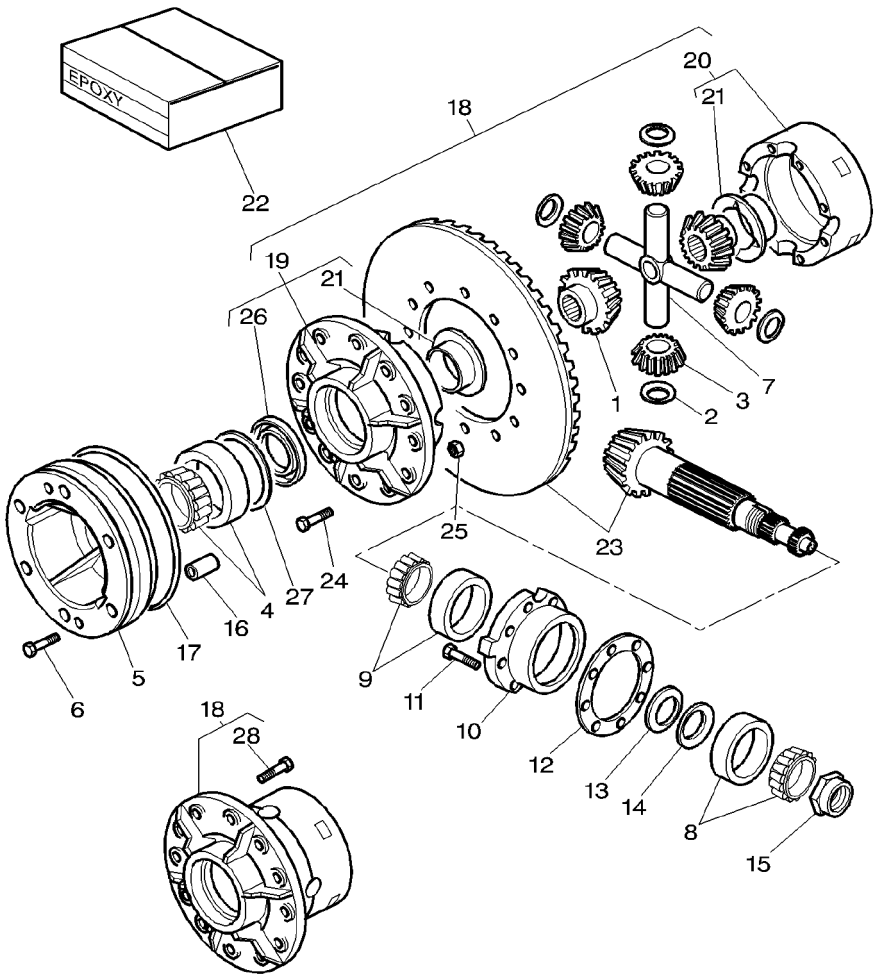

16	1611277M1	∅	16X20
17	3716335M1		
18	3714981M15		
19		18	REF 18
20		18	REF 18
21	3714982M4	18	
22	3930274M92		
23	3716406M94		9X44
24	825776M1		
25	891947M1		
26	3791415M1	19	
27	3791686M1	⧗	0.1 MM
27	3791687M1	⧗	0.3 MM
27	3791689M1	⧗	0.05 MM
28	362782X1	18	

1	PIN	GOUPILLE PERNO	BOLZEN PASADOR
1	O RING	JOINT TORIQUE ANELLO OR	O-RING JUNTA TORICA
1	KIT, WOBBLE BOX	JEU BOITIER KIT SCATOLA DIS.	TAUMELANTR.SATZ KIT CUERPO EXCEN
1	HOUSING	CARTER CARCASSA	GEHAEUSE ALOJAMIENTO
1	HOUSING	CARTER CARCASSA	GEHAEUSE ALOJAMIENTO
2	BUSH	BAGUE BOCCOLA	BUCHSE CASQUILLO
1	LOCTITE	LOCTITE LOCTITE	LOCTITE LOCTITE
1	KIT, BEVEL GEAR	COUPLE CONIQUE KIT COPPIA CONIC	KEGELRADSATZ CORONA Y PINON
12	SCREW SPECIAL	VIS SPECIALE VITE SPECIALE	SPEZIALSCHRAUBE TORNILLO ESPEC.
12	NUT SPECIAL	ECROU SPECIAL DADO SPECIALE	SPEZIALMUTTER TUERCA ESPECIAL
1	DEFLECTOR	DEFLECTEUR DEFLETTORE	ABWEISBLECH DEFLECTOR
1	CHOCK	CALE PASSACAVO	UNTERLEG-KEIL CALZA
1	CHOCK	CALE PASSACAVO	UNTERLEG-KEIL CALZA
1	CHOCK	CALE PASSACAVO	UNTERLEG-KEIL CALZA
8	SCREW	VIS VITE	SCHRAUBE TORNILLO

Rear Axle	**Differential**	**7" Diffrential**
Essieu Arriere	**Differentiel**	**Differentiel 7"**
Hinterachse	**Differential**	**Differential 7"**
Assale Posteriore	**Differenziale**	**Differenziale 7"**
Eje Trasero	**Diferencial**	**Differencial 7"**

30-55

1-ZG09-002-A

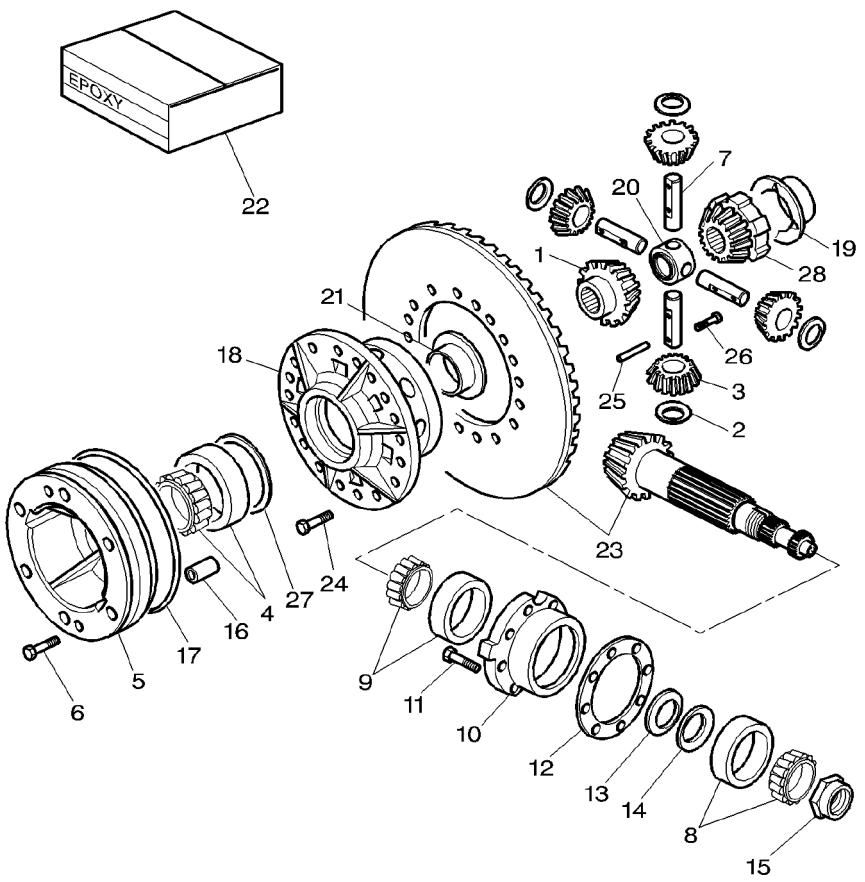

1	3716473M3		**1**	PINION	PIGNON PIGNONE	RITZEL PINON
2	3791227M2		**4**	WASHER	RONDELLE RONDELLA	UNTERLEGSCHEIBE ARANDELA
3	3716463M1		**4**	DIFF PINION	SATELLITE PIGNONE DIFFEREN	DIFF.KEGELRAD PINON DIFERENC
4	3010714X91		**1**	BEARING TAPER	ROULEMNT CONIQUE CUSCINETTO CONIC	KEGELLAGER RODAMIENTO CONI
5	3792791M1		**1**	SUPPORT	SUPPORT SUPPORTO	LAGERUNG DISPOS.DE SOSTEN
6	3019899X1	M12X50	**6**	BOLT METRIC	BOULON METRIQUE BULLONE METRICO	MASCH.SCHRB MET PERNO METRICO
7	3716470M2		**4**	CLEVIS PIN	AXE PERNO D'ATTACCO	SPLINTBOLZEN BULON CILINDRICO
8	3010720X91		**1**	BEARING ASSY	ROULEMENT CUSCINETTO COMPL	RADIALLAGER RODAMIENTO RAD
9	3010735X91		**1**	BEARING ASSY	ROULEMENT CUSCINETTO COMPL	RADIALLAGER RODAMIENTO RAD
10	3716430M2		**1**	CASE ASSY	BOITIER CARCASSA COMPLET	GEHAEUSE KPL CAJA COMPLETA
11	3010010X1	M12X40	**4**	SCREW	VIS VITE	SCHRAUBE TORNILLO
11	3010770X1	M12X35	**4**	SCREW METRIC	VIS METRIQUE VITE METRICA	SCHRAUBE METR TORNILLO METRICO
12	3716566M1	⧗ 0,05MM	**X**	SHIM	CALE REGLAGE SPESSORE	EINSTELLBLECH CALCE
12	3716567M1	⧗ 0,1MM	**X**	SHIM	CALE REGLAGE SPESSORE	EINSTELLBLECH CALCE
12	3716568M1	⧗ 0,2MM	**X**	SHIM	CALE REGLAGE SPESSORE	EINSTELLBLECH CALCE
12	3716569M1	⧗ 0,3MM	**X**	SHIM	CALE REGLAGE SPESSORE	EINSTELLBLECH CALCE
13	3716422M1		**1**	WASHER	RONDELLE RONDELLA	UNTERLEGSCHEIBE ARANDELA
14	3792328M2	⧗ 0,65MM	**X**	CHOCK	CALE PASSACAVO	UNTERLEG-KEIL CALZA
14	3716431M2	⧗ 0,7MM	**X**	SHIM	CALE REGLAGE SPESSORE	EINSTELLBLECH CALCE
14	3792329M2	⧗ 0,75MM	**X**	CHOCK	CALE PASSACAVO	UNTERLEG-KEIL CALZA
14	3716432M2	⧗ 0,8MM	**X**	SHIM	CALE REGLAGE SPESSORE	EINSTELLBLECH CALCE
14	3792330M2	⧗ 0,85MM	**X**	CHOCK	CALE PASSACAVO	UNTERLEG-KEIL CALZA
14	3716433M2	⧗ 0,9MM	**X**	SHIM	CALE REGLAGE SPESSORE	EINSTELLBLECH CALCE
14	3792331M2	⧗ 0,95MM	**X**	CHOCK	CALE PASSACAVO	UNTERLEG-KEIL CALZA
14	3716434M2	⧗ 1MM	**X**	SHIM	CALE REGLAGE SPESSORE	EINSTELLBLECH CALCE
15	3716450M1	M60	**1**	NUT SPECIAL	ECROU SPECIAL DADO SPECIALE	SPEZIALMUTTER TUERCA ESPECIAL

Rear Axle **Essieu Arriere** **Hinterachse** **Assale Posteriore** **Eje Trasero**	**Differential** **Differentiel** **Differential** **Differenziale** **Diferencial**	**30-55**	**7" Diffrential** **Differentiel 7"** **Differential 7"** **Differenziale 7"** **Differencial 7"**

1-ZG09-002-A

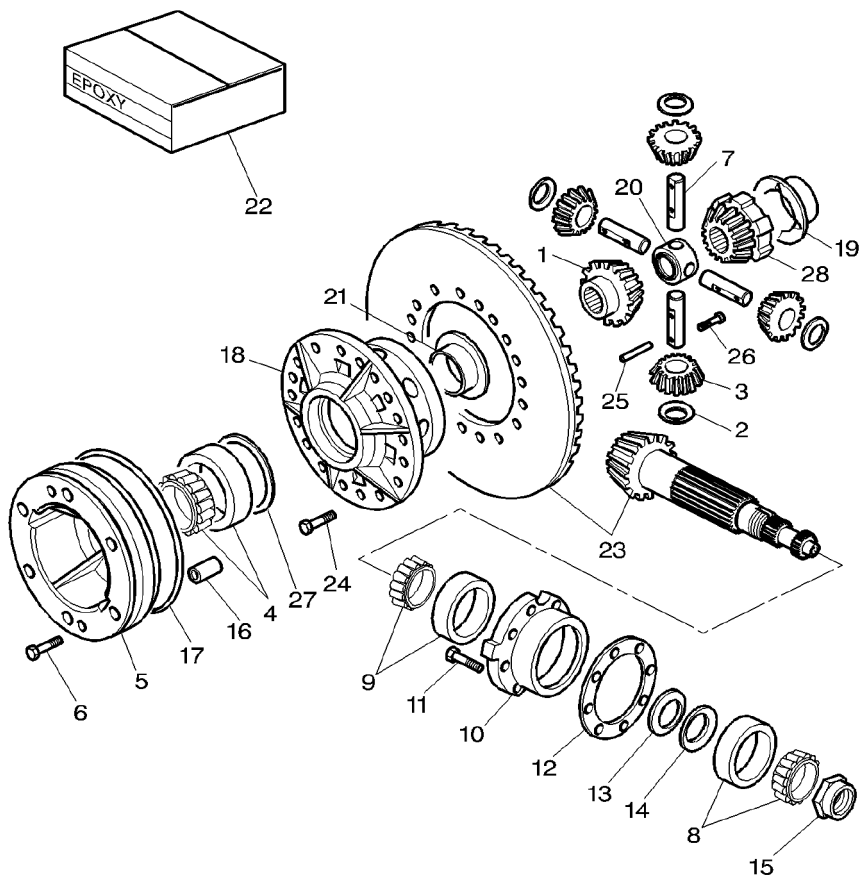

16	1611277M1	∅ 16X20	**1**	PIN	GOUPILLE PERNO	BOLZEN PASADOR
17	3716335M1		**1**	O RING	JOINT TORIQUE ANELLO OR	O-RING JUNTA TORICA
18	3716464M4		**1**	CASE ASSY	BOITIER CARCASSA COMPLET	GEHAEUSE KPL CAJA COMPLETA
19	3716472M3		**1**	WASHER	RONDELLE RONDELLA	UNTERLEGSCHEIBE ARANDELA
20	3716059M4		**1**	CROSSPIECE	CROISILLON TRAVERSA	KREUZSTUECK PIEZA TRANSVERSA
21	3716327M3		**1**	BUSH	BAGUE BOCCOLA	BUCHSE CASQUILLO
22	3930274M92		**1**	LOCTITE	LOCTITE LOCTITE	LOCTITE LOCTITE
23	3792781M91	9X44	**1**	KIT, BEVEL GEAR	COUPLE CONIQUE KIT COPPIA CONIC	KEGELRADSATZ CORONA Y PINON
24	3010783X1	M16X40	**18**	SCREW METRIC	VIS METRIQUE VITE METRICA	SCHRAUBE METR TORNILLO METRICO
25	3384279M1		**4**	NEEDLE	AIGUILLE AGO	NADEL AGUJA
26	1441000X1	M8X16	**4**	SCREW METRIC	VIS METRIQUE VITE METRICA	SCHRAUBE METR TORNILLO METRICO
27	3791616M1	⧗ 0.05 MM	**1**	CHOCK	CALE PASSACAVO	UNTERLEG-KEIL CALZA
27	3791617M1	⧗ 0.1 MM	**1**	CHOCK	CALE PASSACAVO	UNTERLEG-KEIL CALZA
27	3791618M1	⧗ 0.3 MM	**1**	CHOCK	CALE PASSACAVO	UNTERLEG-KEIL CALZA
28	3716474M4		**1**	PLANET	PLANETAIRE PLANETARIO	PLANETENRAD PLANETARIO

1-ZG21-002-A

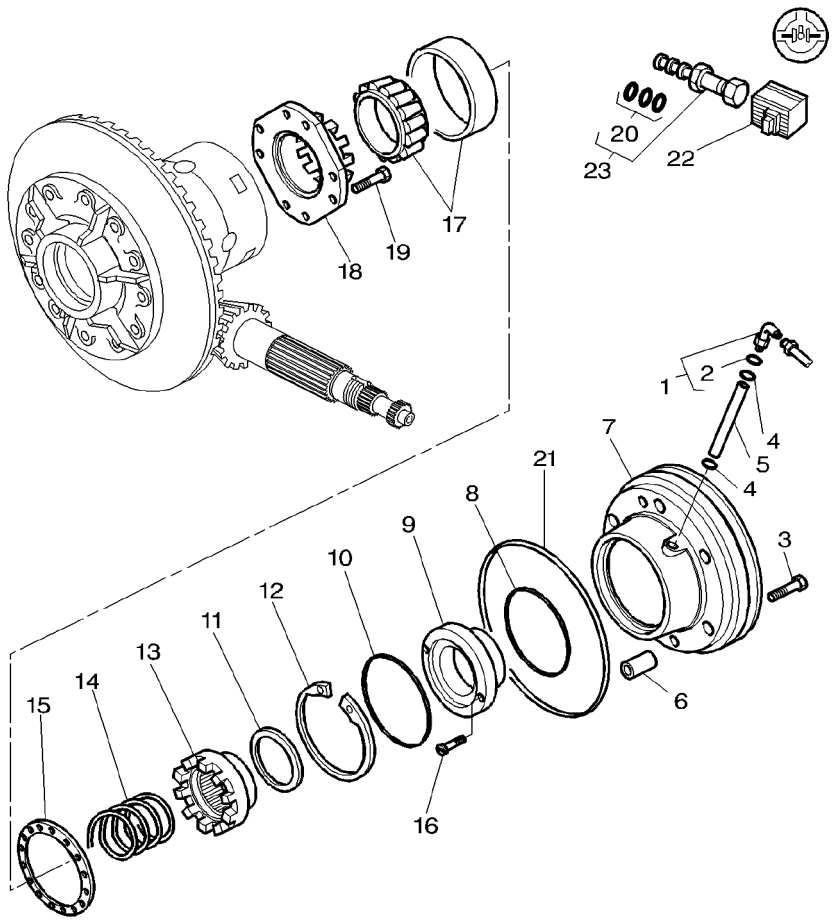

1	3385713M91			**1**	UNION	RACCORD RACCORDO	VERSCHRAUBUNG RACOR
2	831497M1	1		**1**	O RING	JOINT TORIQUE ANELLO OR	O−RING JUNTA TORICA
3	3019899X1	M12X50		**6**	BOLT METRIC	BOULON METRIQUE BULLONE METRICO	MASCH.SCHRB MET PERNO METRICO
4	377494X1			**2**	O RING	JOINT TORIQUE ANELLO OR	O−RING JUNTA TORICA
5	3716571M2			**1**	TUBE	TUBE TUBO	ROHR TUBO
6	1611277M1	∅ 16X20		**1**	PIN	GOUPILLE PERNO	BOLZEN PASADOR
7	3716331M4			**1**	SUPPORT	SUPPORT SUPPORTO	LAGERUNG DISPOS.DE SOSTEN
8	152613M1			**1**	O RING	JOINT TORIQUE ANELLO OR	O−RING JUNTA TORICA
9	3792455M1			**1**	PISTON	PISTON PISTONE	KOLBEN PISTON
9	**3382480M1**	H162000 (F) (GB)		**1**	PISTON	PISTON PISTONE	KOLBEN PISTON
9	3792455M1	H162001 (F) (GB)		**1**	PISTON	PISTON PISTONE	KOLBEN PISTON
10	359118X1			**1**	O RING	JOINT TORIQUE ANELLO OR	O−RING JUNTA TORICA
11	3792454M1			**1**	WASHER	RONDELLE RONDELLA	UNTERLEGSCHEIBE ARANDELA
11	**3715419M1**	H162000 (F) (GB)		**1**	WASHER	RONDELLE RONDELLA	UNTERLEGSCHEIBE ARANDELA
11	3792454M1	H162001 (F) (GB)		**1**	WASHER	RONDELLE RONDELLA	UNTERLEGSCHEIBE ARANDELA
12	356005X1			**1**	CLIP	CLIP FERMAGLIO	SCHELLE CRAPA RETEN
13	3792456M1			**1**	COUPLING	CRABOT ACCOPPIAMENTO	KUPPLUNG ACOPLAMIENTO
13	3382477M4	H162000 (F) (GB)		**1**	COUPLING	CRABOT ACCOPPIAMENTO	KUPPLUNG ACOPLAMIENTO
13	3792456M1	H162001 (F) (GB)		**1**	COUPLING	CRABOT ACCOPPIAMENTO	KUPPLUNG ACOPLAMIENTO
14	3382481M2			**1**	SPRING	RESSORT MOLLA	FEDER MUELLE
15	521401M2	0,61−0,66MM		**X**	SHIM	CALE REGLAGE SPESSORE	EINSTELLBLECH CALCE
15	187689M2	0,73−0,78MM		**X**	SHIM	CALE REGLAGE SPESSORE	EINSTELLBLECH CALCE
15	892173M2	0,864−0,914		**X**	SHIM	CALE REGLAGE SPESSORE	EINSTELLBLECH CALCE

Rear Axle Differential Lock Mechanism	**Hydromechanical**	**30-60**
Blocage De Differentiel D Essieu Arriere	**Hydromecanique**	
Diff.Sperre Hinterachsgehaeuse Mechanisch	**Hydro−Mechanisch**	
Bloccaggio Differenziale Posteriore	**Idromeccanico**	
Mecanismo De Traba De Diferencial Del Eje Trasero	**Hidromecanico**	

1-ZG21-002-A

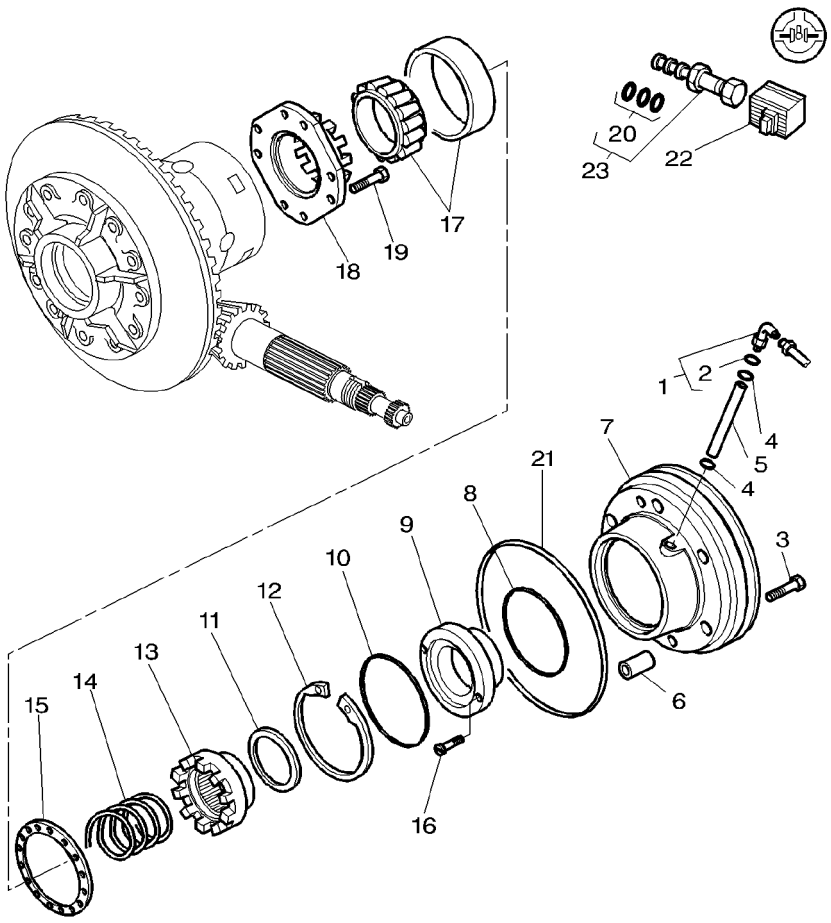

15	892172M2	⧗ 0,991−1,041	**X**	SHIM	CALE REGLAGE SPESSORE	EINSTELLBLECH CALCE
15	892171M2	⧗ 1,118−1,168	**X**	SHIM	CALE REGLAGE SPESSORE	EINSTELLBLECH CALCE
15	892170M2	⧗ 1,245−1,295	**X**	SHIM	CALE REGLAGE SPESSORE	EINSTELLBLECH CALCE
15	191124M2	⧗ 1,37−1,42MM	**X**	SHIM	CALE REGLAGE SPESSORE	EINSTELLBLECH CALCE
15	191125M2	⧗ 1,49−1,54MM	**X**	SHIM	CALE REGLAGE SPESSORE	EINSTELLBLECH CALCE
16	3382377M1		**1**	CENTRALISER	PION CENTRALIZZATORE	FUEHRUNGSKORB CENTRALIZADOR
17	1850909M91		**1**	BEARING ASSY	ROULEMENT CUSCINETTO COMPL	RADIALLAGER RODAMIENTO RAD
18	3382476M2		**1**	COUPLING	CRABOT ACCOPPIAMENTO	KUPPLUNG ACOPLAMIENTO
19	362782X1	1/2"−13X105	**8**	SCREW	VIS VITE	SCHRAUBE TORNILLO
20	3900994M91	23	**1**	KIT, JOINT	JEU JOINTS KIT GIUNTO	DICHTUNGSSATZ JUEGO JUNTAS
21	3716335M1		**1**	O RING	JOINT TORIQUE ANELLO OR	O−RING JUNTA TORICA
22	***3619763M1***		**1**	SOLENOID	SOLENOIDE SOLENOIDE	MAGNETSPULE SOLENOIDE
23	***3619762M1***		**1**	SPOOL	TIROIR ROCCHETTO	STEUERSCHIEBER CARRETE

Rear Axle Differential Lock Mecchanism	**Multidiscs**	**30-65**
Blocage De Differentiel D'Essieu Arriere	**Multidisques**	
Diff.Sperre Hinterachsgehaeuse Mechanisch	**Meherschribe**	
Bloccaggio Differenziall Posteriore	**Molteplice Discos**	
Mecanismo De Traba De Diferencial Del Eje Trasero	**Multiplos Discosq**	

5" Differential
Differentiel 5"
Differential 5"
Differenziale 5"
Differencial 5"

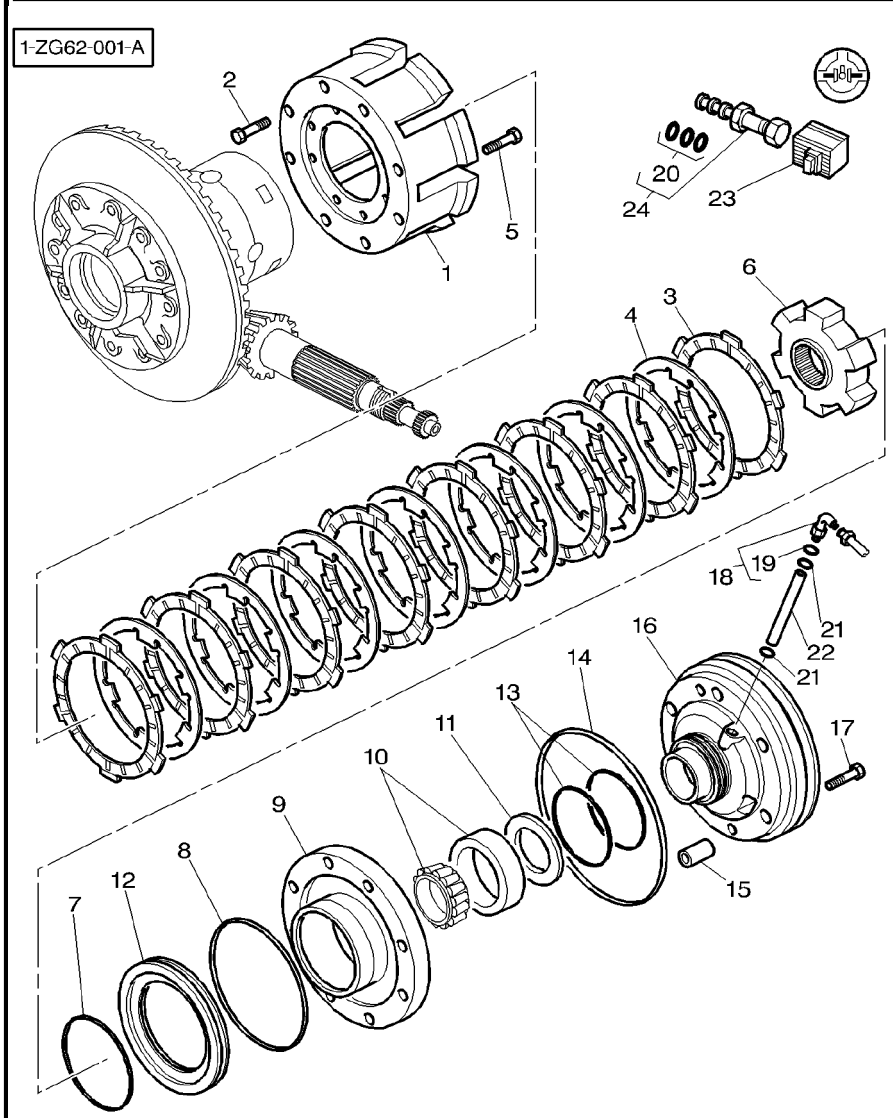

1	3716851M3	∅ 262 MM	**1**	CASE ASSY	BOITIER CARCASSA COMPLET	GEHAEUSE KPL CAJA COMPLETA
2	3009515X1	M12X80	**8**	BOLT METRIC	BOULON METRIQUE BULLONE METRICO	MASCH.SCHRB MET PERNO METRICO
3	3616741M1		**8**	DISC	DISQUE DISCO	SCHEIBE DISCO
4	3616742M1		**7**	COUNTERPLATE	CONTRE PLAQUE CONTROPIASTRA	GEGENPLATTE CONTRAPLACA
5	362782X1	1/2"-13X102	**8**	SCREW	VIS VITE	SCHRAUBE TORNILLO
6	3716855M3		**1**	HUB	MOYEU MOZZO	NABE CUBO
7	70923591		**1**	O RING	JOINT TORIQUE ANELLO OR	O-RING JUNTA TORICA
8	359008X1		**1**	O RING	JOINT TORIQUE ANELLO OR	O-RING JUNTA TORICA
9	3716309M13		**1**	CASE ASSY	BOITIER CARCASSA COMPLET	GEHAEUSE KPL CAJA COMPLETA
10	3010726X91		**1**	BEARING TAPER	ROULEMNT CONIQUE CUSCINETTO CONIC	KEGELLAGER RODAMIENTO CONI
11	3716857M1	⧗ 0,5 MM	**X**	SHIM	CALE REGLAGE SPESSORE	EINSTELLBLECH CALCE
11	3716858M1	⧗ 0,6 MM	**X**	SHIM	CALE REGLAGE SPESSORE	EINSTELLBLECH CALCE
11	3791784M1	⧗ 0,7 MM	**X**	CHOCK	CALE PASSACAVO	UNTERLEG-KEIL CALZA
11	3716859M1	⧗ 0,8 MM	**X**	SHIM	CALE REGLAGE SPESSORE	EINSTELLBLECH CALCE
11	3716860M1	⧗ 0,9 MM	**X**	SHIM	CALE REGLAGE SPESSORE	EINSTELLBLECH CALCE
12	3716854M1		**1**	PISTON	PISTON PISTONE	KOLBEN PISTON
13	3716856M2		**2**	SEGMENT	SEGMENT SEGMENTO	SEGMENT SEGMENTO
14	3716335M1		**1**	O RING	JOINT TORIQUE ANELLO OR	O-RING JUNTA TORICA
15	1611277M1	∅ 16X20	**1**	PIN	GOUPILLE PERNO	BOLZEN PASADOR
16	3716853M14		**1**	SUPPORT	SUPPORT SUPPORTO	LAGERUNG DISPOS.DE SOSTEN
17	3019899X1	M12X50	**6**	BOLT METRIC	BOULON METRIQUE BULLONE METRICO	MASCH.SCHRB MET PERNO METRICO
18	3385713M91		**1**	UNION	RACCORD RACCORDO	VERSCHRAUBUNG RACOR
19	831497M1	18	**1**	O RING	JOINT TORIQUE ANELLO OR	O-RING JUNTA TORICA
20	3900994M91	24	**1**	KIT, JOINT	JEU JOINTS KIT GIUNTO	DICHTUNGSSATZ JUEGO JUNTAS
21	377494X1		**2**	O RING	JOINT TORIQUE ANELLO OR	O-RING JUNTA TORICA
22	3716571M2		**1**	TUBE	TUBE TUBO	ROHR TUBO

Rear Axle Differential Lock Mecchanism	**Multidiscs**	**30-65**	**5" Differential**
Blocage De Differentiel D'Essieu Arriere	**Multidisques**		**Differentiel 5"**
Diff.Sperre Hinterachsgehaeuse Mechanisch	**Meherschribe**		**Differential 5"**
Bloccaggio Differenziall Posteriore	**Molteplice Discos**		**Differenziale 5"**
Mecanismo De Traba De Diferencial Del Eje Trasero	**Multiplos Discosq**		**Differencial 5"**

1-ZG62-001-A

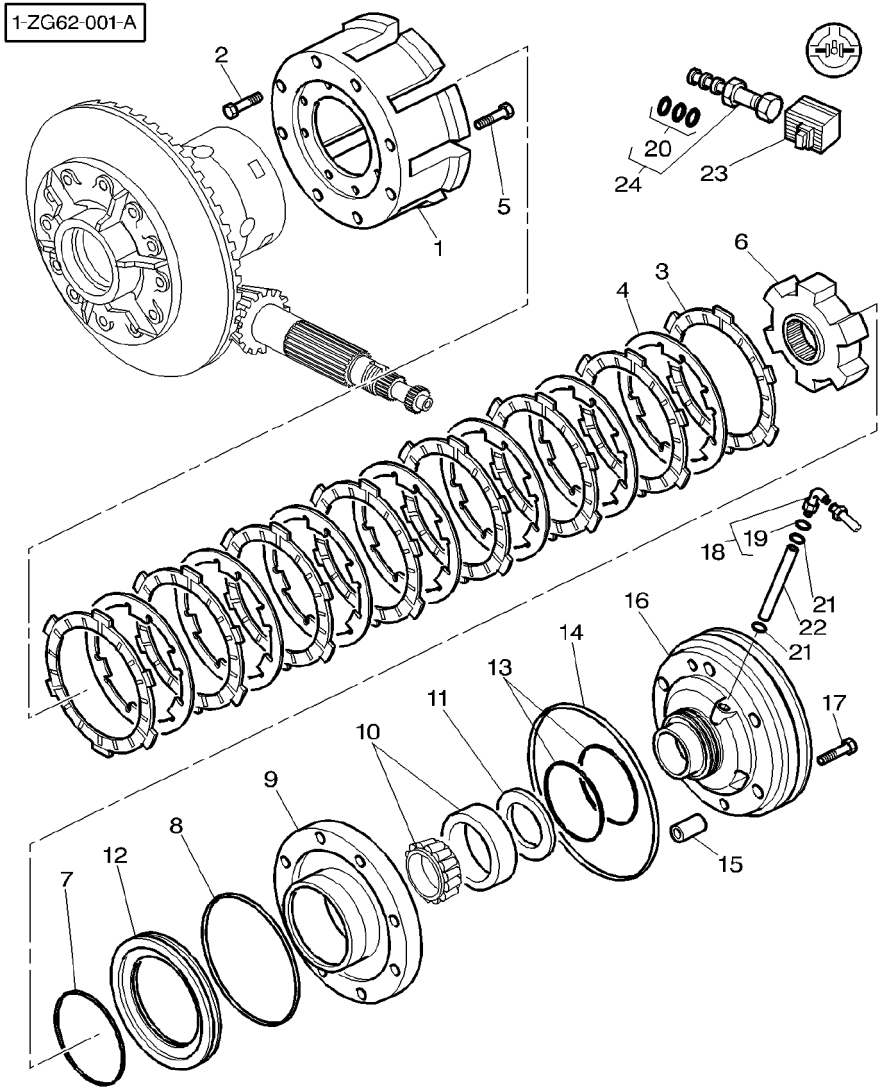

23	***3619763M1***	**1**	SOLENOID	SOLENOIDE SOLENOIDE	MAGNETSPULE SOLENOIDE
24	***3619762M1***	**1**	SPOOL	TIROIR ROCCHETTO	STEUERSCHIEBER CARRETE

Rear Axle Differential Lock Mecchanism	**Multidiscs**	**30-70**	**7" Diffrential**
Blocage De Differentiel D'Essieu Arriere	**Multidisques**		**Differentiel 7"**
Diff.Sperre Hinterachsgehaeuse Mechanisch	**Meherschribe**		**Differential 7"**
Bloccaggio Differenziall Posteriore	**Molteplice Discos**		**Differenziale 7"**
Mecanismo De Traba De Diferencial Del Eje Trasero	**Multiplos Discosq**		**Differencial 7"**

1-ZG62-003-A

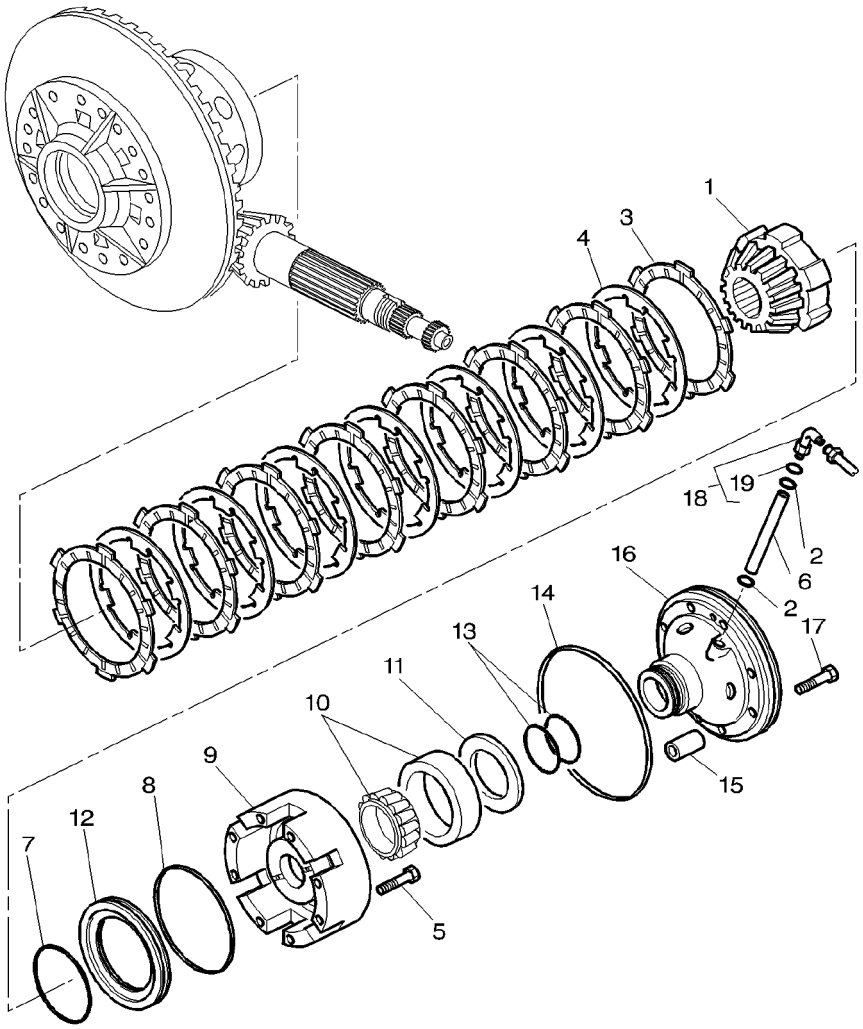

1	3716474M4		
2	377494X1		
3	3616741M1		
4	3616742M1		
5	3010784X1	M12X110	
6	3716571M2		
7	70923591		
8	359008X1		
9	3716562M12	∅ 256 MM	
10	1850909M91		
11	3716479M1	⧗ 0,5 MM	
11	3716480M1	⧗ 0,6 MM	
11	3791782M1	⧗ 0,7 MM	
11	3716486M1	⧗ 0,8 MM	
11	3791783M1	⧗ 0,9 MM	
12	3716467M1		
13	3716580M3		
14	3716335M1		
15	1611277M1	∅ 16X20	
16	3792800M11		
17	3019899X1	M12X50	
18	3385713M91		
19	831497M1	18	

1	PLANET	PLANETAIRE PLANETARIO	PLANETENRAD PLANETARIO
2	O RING	JOINT TORIQUE ANELLO OR	O-RING JUNTA TORICA
8	DISC	DISQUE DISCO	SCHEIBE DISCO
7	COUNTERPLATE	CONTRE PLAQUE CONTROPIASTRA	GEGENPLATTE CONTRAPLACA
8	SCREW METRIC	VIS METRIQUE VITE METRICA	SCHRAUBE METR TORNILLO METRICO
1	TUBE	TUBE TUBO	ROHR TUBO
1	O RING	JOINT TORIQUE ANELLO OR	O-RING JUNTA TORICA
1	O RING	JOINT TORIQUE ANELLO OR	O-RING JUNTA TORICA
1	CASE ASSY	BOITIER CARCASSA COMPLET	GEHAEUSE KPL CAJA COMPLETA
1	BEARING ASSY	ROULEMENT CUSCINETTO COMPL	RADIALLAGER RODAMIENTO RAD
X	CHOCK	CALE PASSACAVO	UNTERLEG-KEIL CALZA
X	CHOCK	CALE PASSACAVO	UNTERLEG-KEIL CALZA
x	CHOCK	CALE PASSACAVO	UNTERLEG-KEIL CALZA
X	CHOCK	CALE PASSACAVO	UNTERLEG-KEIL CALZA
x	CHOCK	CALE PASSACAVO	UNTERLEG-KEIL CALZA
1	PISTON	PISTON PISTONE	KOLBEN PISTON
2	SEGMENT	SEGMENT SEGMENTO	SEGMENT SEGMENTO
1	O RING	JOINT TORIQUE ANELLO OR	O-RING JUNTA TORICA
1	PIN	GOUPILLE PERNO	BOLZEN PASADOR
1	SUPPORT	SUPPORT SUPPORTO	LAGERUNG DISPOS.DE SOSTEN
6	BOLT METRIC	BOULON METRIQUE BULLONE METRICO	MASCH.SCHRB MET PERNO METRICO
1	UNION	RACCORD RACCORDO	VERSCHRAUBUNG RACOR
1	O RING	JOINT TORIQUE ANELLO OR	O-RING JUNTA TORICA

40

1-ZP73-001-A

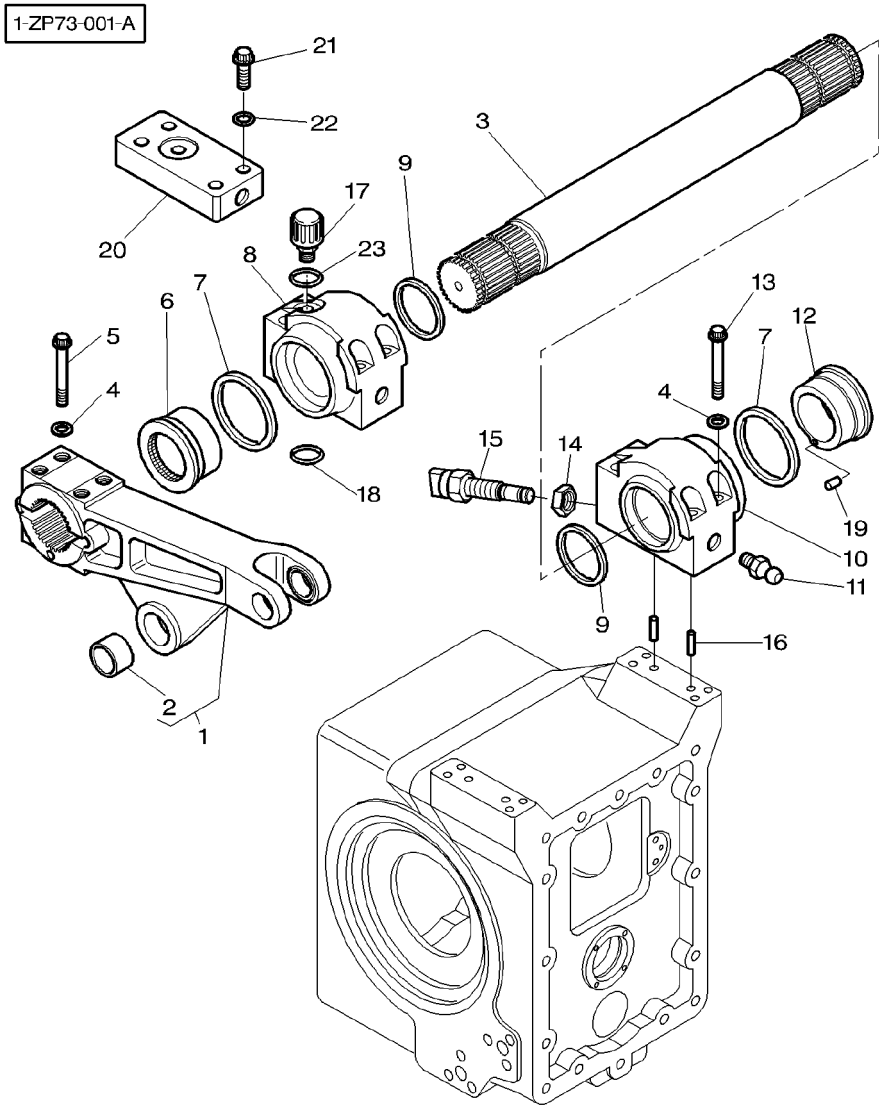

1	3716511M13	◀	
1	3716527M13	▶	
2	3716510M2	1	
3	3716538M2		
4	3010875X1	∅ 16 MM	
5	3019874X1	M16x115	
6	3716522M2	◀	
7	3716689M1	∅ 120MM	
8	3716506M13	◀	
9	3716616M1	∅ 85MM	
10	3716521M14	▶	
11	1441858X1		
12	3716513M4	▶	
13	3010566X1	M16x130	
14	3385674M1	M24	
15	***3712728M3***		
16	3385839M2		
17	3716934M1		
18	**364105X1**		
19	3019304X1		
20	3791696M1	[A]	
21	3009806X1	[A] M16X70	
22	3010875X1	[A]	
23	3019396X1		

1	ARM	BRAS BRACCIO	ARM BRAZO
1	ARM	BRAS BRACCIO	ARM BRAZO
1	BUSH	BAGUE BOCCOLA	BUCHSE CASQUILLO
1	SHAFT	ARBRE ALBERO	WELLE ARBOL
16	WASHER	RONDELLE RONDELLA	UNTERLEGSCHEIBE ARANDELA
8	SCREW METRIC	VIS METRIQUE VITE METRICA	SCHRAUBE METR TORNILLO METRICO
1	CAM	CAME CAMMA	NOCKEN LEVA
2	GASKET	JOINT GUARNIZIONE	DICHTSCHEIBE EMPAQUETADURA.
1	BEARING CARRIER	PALIER CUSCINETTO SUPP-	LAGER-GEHAEUSE TEJUELO
2	GASKET	JOINT GUARNIZIONE	DICHTSCHEIBE EMPAQUETADURA.
1	BEARING CARRIER	PALIER CUSCINETTO SUPP-	LAGER-GEHAEUSE TEJUELO
2	GREASER	GRAISSEUR INGRASSATORE	FETTNIPPEL ENGRASADOR
1	CAM	CAME CAMMA	NOCKEN LEVA
8	SCREW METRIC	VIS METRIQUE VITE METRICA	SCHRAUBE METR TORNILLO METRICO
1	NUT	ECROU DADO	MUTTER TUERCA
1	INDUCTIVE TAKER	CAPTEUR INDUCTIF SENSORE INDUTTIV	SENSOR GESCHWIN. CAPTADOR INDUCT.
4	PIN	GOUPILLE PERNO	BOLZEN PASADOR
1	BREATHER	RENIFLARD SFIATATOIO	ENTLUEFTER RESPIRADERO
1	O RING	JOINT TORIQUE ANELLO OR	O-RING JUNTA TORICA
1	SPIROL PIN	GOUPILLE SPIRALE SPINA ESPANSIONE	SPIRALSTIFT PASADOR ESPIRAL
1	BEARING CARRIER	PALIER CUSCINETTO SUPP-	LAGER-GEHAEUSE TEJUELO
4	PLOUGH BOLT	VIS A EMBASE VITE TESTA TONDA	SENKSCHLOSSSCHRB TORNILLO ALOJ C
4	WASHER	RONDELLE RONDELLA	UNTERLEGSCHEIBE ARANDELA
1	O RING	JOINT TORIQUE ANELLO OR	O-RING JUNTA TORICA

1-ZP73-001-A

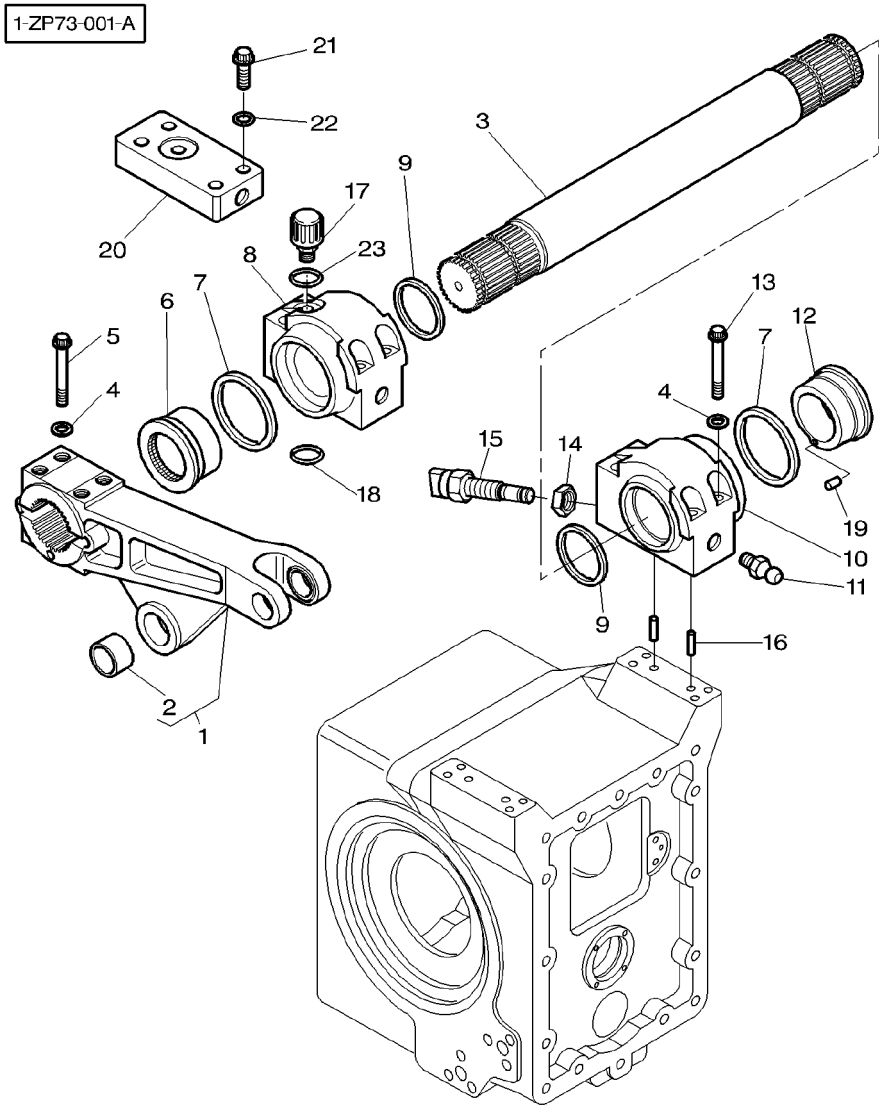

[A] WITHOUT HYDRAULIC LIFT
SANS RELEVAGE
OHNE HYDRAULIK
SENZA IDRAULICO
SIN HIDRAULICO

1-ZQ17-006-A

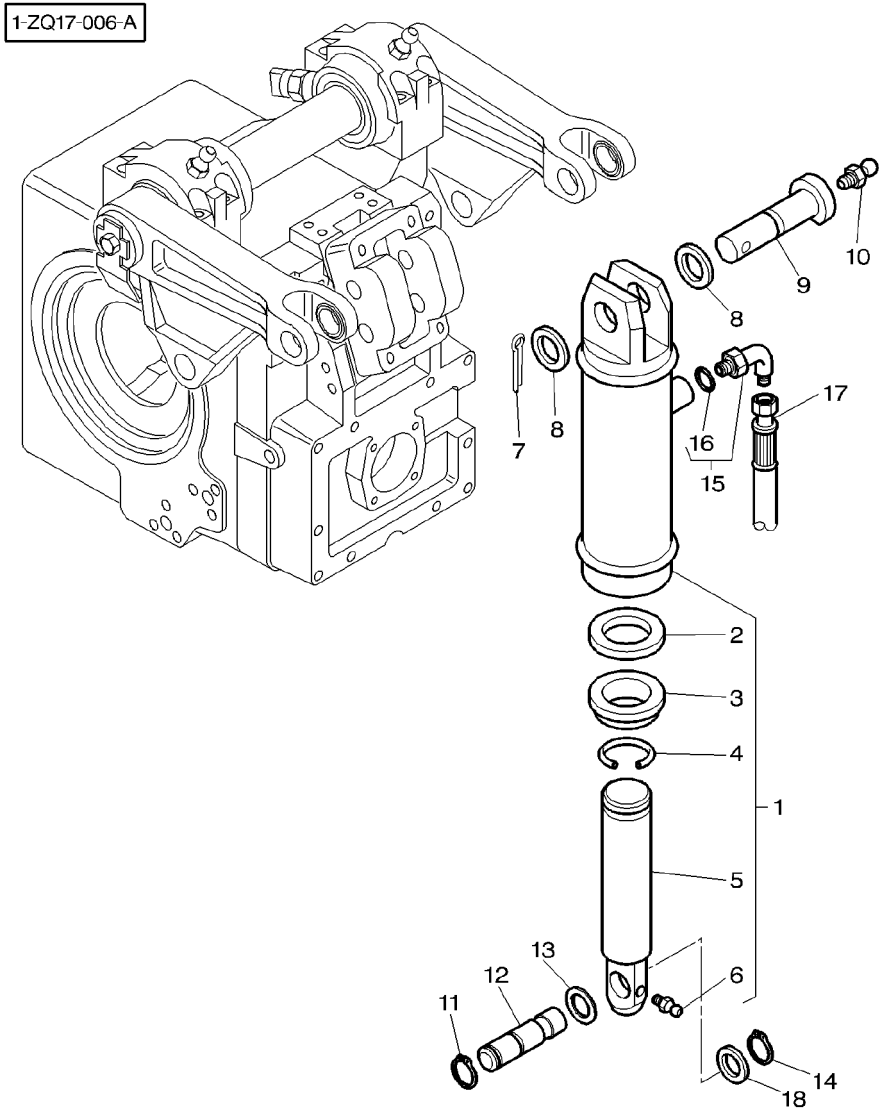

1	3716601M93	∅ 95 MM	2	LIFT CYLINDER	VERIN RELEVAGE CILINDRO SOLLEV-	HUBZYLINDER CILINDRO ELEVAD
2	3902766M1	1	1	GASKET	JOINT GUARNIZIONE	DICHTSCHEIBE EMPAQUETADURA.
3	3902765M1	1	1	WIPER	ESSUYEUR SPAZZOLA VETRI	WISCHER LIMPIADOR
4	3902768M1	1	1	RING	ANNEAU ANELLO	RING ARO
5	3902767M1	1	1	CYLINDER ROD	TIGE DE VERIN ASTA CILINDRO	KOLBENSTANGE BIELA DE CILINDR
6	1441858X1	1	1	GREASER	GRAISSEUR INGRASSATORE	FETTNIPPEL ENGRASADOR
7	1442981X1		2	PIN	GOUPILLE PERNO	BOLZEN PASADOR
8	3716680M2	∅ 41 MM ∅ 60 MM ⧗ 10,5 MM	2	WASHER	RONDELLE RONDELLA	UNTERLEGSCHEIBE ARANDELA
9	3716609M1		2	CLEVIS PIN	AXE PERNO D'ATTACCO	SPLINTBOLZEN BULON CILINDRICO
10	1441858X1		2	GREASER	GRAISSEUR INGRASSATORE	FETTNIPPEL ENGRASADOR
11	22608X		2	CIRCLIP	SEGMENT D ARRET ANELLO D'ARRESTO	SICHERUNGSRING CIRCULITO
12	3716627M2		2	CLEVIS PIN	AXE PERNO D'ATTACCO	SPLINTBOLZEN BULON CILINDRICO
13	3716682M2	∅ 45 MM ∅ 60 MM ⧗ 6 MM	2	WASHER	RONDELLE RONDELLA	UNTERLEGSCHEIBE ARANDELA
14	3010066X1		2	CLIP	CLIP FERMAGLIO	SCHELLE CRAPA RETEN
15	3019418X91		2	UNION	RACCORD RACCORDO	VERSCHRAUBUNG RACOR
16	3019398X1	15	1	O RING	JOINT TORIQUE ANELLO OR	O-RING JUNTA TORICA
17	3716385M1	◀	1	TUBE	TUBE TUBO	ROHR TUBO
17	3716383M1	▶	1	TUBE	TUBE TUBO	ROHR TUBO
18			X	NOT USED	NON UTILISE INUSATO	NICHT VERWENDET NO SE USA

Levelling Box
Boitier De Nivellement
Verstellgehaeuse
Scatola Livello
Caja Niveladora

40-15

1-ZQ32-003-C

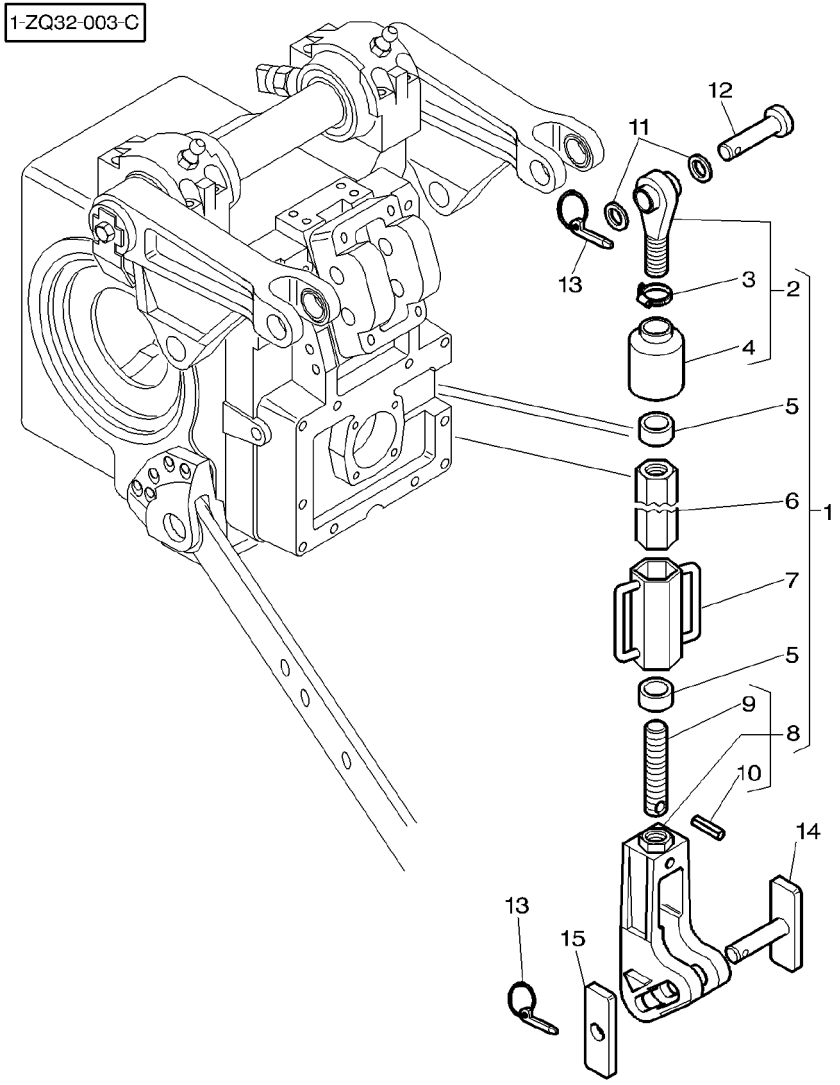

1	3792628M91		**2**	DRAGLINK	TIRANT	SCHUBSTANGE
					MAGLIA PER DRAGA	ENGANCHE DE TIRO
2	3792629M91	1	**1**	TOGGLE	ROTULE	GELENKZAPFEN
					ROTULA	PERNO ENGANCHE
3	338615X1	2	**1**	CLAMP	COLLIER	HALTESCHELLE
					FASCETTA	ABRAZADERA
4	3580198M1	2	**1**	HELMET	CAPUCHON	SCHUTZHELM
					CASCO	CASCO
5	3716978M1	1	**2**	BUSH	BAGUE	BUCHSE
					BOCCOLA	CASQUILLO
6	**3581997M1**	1	**1**	TUBE	TUBE	ROHR
					TUBO	TUBO
7	3386457M2	1	**1**	HANDLE	POIGNEE	HANDGRIFF
					MANIGLIA	MANETA
8	3792637M91	1	**1**	CLEVIS	CHAPE	GABELSTUECK
					GANCIO D'ATTACCO	GANCHO SEGURI.
9	3716979M1	8	**1**	CLEVIS PIN	AXE	SPLINTBOLZEN
					PERNO D'ATTACCO	BULON CILINDRICO
10	3819644M1	8	**1**	SPIROL PIN	GOUPILLE SPIRALE	SPIRALSTIFT
					SPINA ESPANSIONE	PASADOR ESPIRAL
11	3716148M1		**4**	WASHER	RONDELLE	UNTERLEGSCHEIBE
					RONDELLA	ARANDELA
12	3716661M1		**2**	CLEVIS PIN	AXE	SPLINTBOLZEN
					PERNO D'ATTACCO	BULON CILINDRICO
13	3387161M2		**4**	PIN	GOUPILLE	BOLZEN
					PERNO	PASADOR
14	3792015M91		**2**	CLEVIS PIN	AXE	SPLINTBOLZEN
					PERNO D'ATTACCO	BULON CILINDRICO
15	3580195M1		**2**	TAPPET PLATE	PLAQUETTE	STOESSELTELLER
					PIASTRA PUNTERIE	PLACA DE VALVULA

Linkage **Attelage** **Lenker** **Tiranteria** **Enganches**	**Top Link With Ball End** **Barre De 3eme Point A Rotule** **Oberlenker Mit Kugelgelenk** **Maglia Superior Con Snodo Sferico** **Barra Enganche Con Bola**	**40-20**

1-ZQ08-004-A

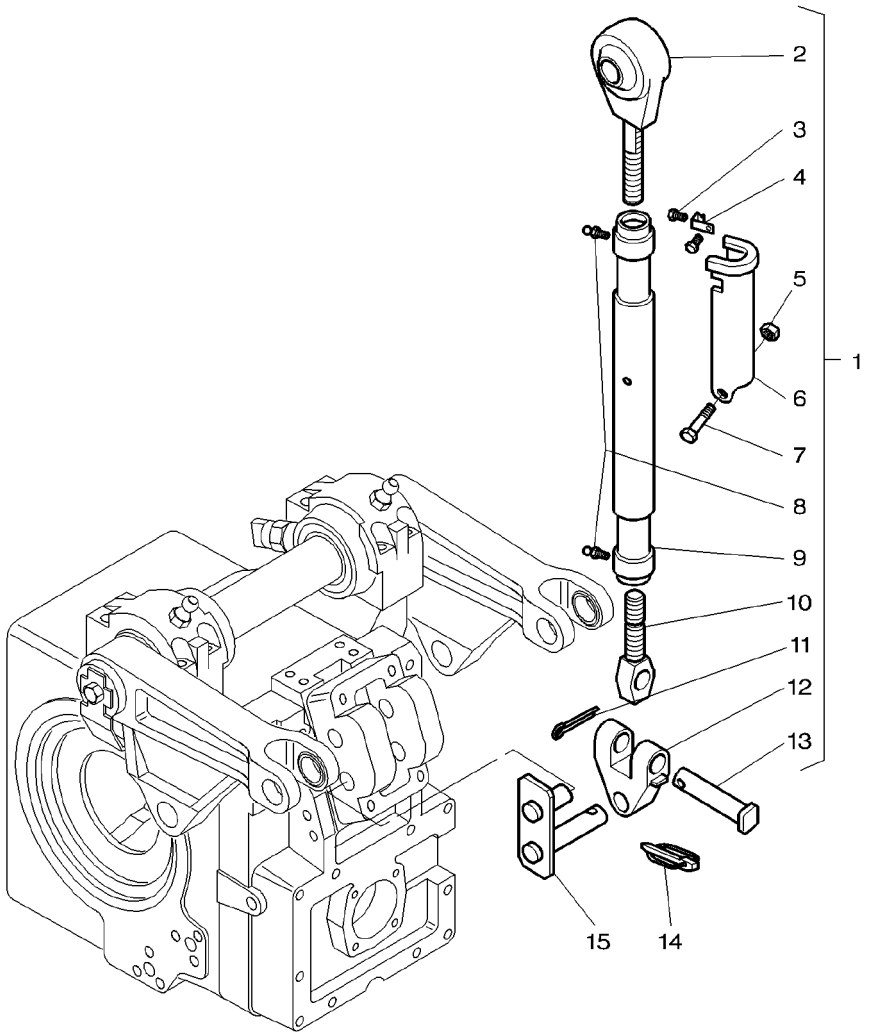

1	3791536M92		**1**	BAR	BARRE BARRA	STAB BARRA
2	***3791537M1***	1	**1**	TOGGLE	ROTULE ROTULA	GELENKZAPFEN PERNO ENGANCHE
3	3008179X1	1 M4X10	**2**	SCREW METRIC	VIS METRIQUE VITE METRICA	SCHRAUBE METR TORNILLO METRICO
4	3715691M1	1	**1**	SPRING	RESSORT MOLLA	FEDER MUELLE
5	394367X1	1	**1**	LOCKNUT	ECROU BLOCAGE AUTOBLOCCANTE	FLACHMUTTER CONTRATUERCA
6	3715828M91	1	**1**	LEVER	LEVIER LEVA	HEBEL PALANCA
7	390246X1	1 M8X70	**1**	BOLT	BOULON BULLONE	MASCH.SCHRAUBE PERNO
8	3715689M1	1	**2**	GREASER	GRAISSEUR INGRASSATORE	FETTNIPPEL ENGRASADOR
9	3791539M1	1 ◀▶ 420MM	**1**	TUBE	TUBE TUBO	ROHR TUBO
10	3791540M1	1	**1**	DRAGLINK	TIRANT MAGLIA PER DRAGA	SCHUBSTANGE ENGANCHE DE TIRO
11	354092X1	1	**1**	PIN	GOUPILLE PERNO	BOLZEN PASADOR
12	3791541M1	1	**1**	CLEVIS	CHAPE GANCIO D'ATTACCO	GABELSTUECK GANCHO SEGURI.
13	3715690M1	1	**1**	CLEVIS PIN	AXE PERNO D'ATTACCO	SPLINTBOLZEN BULON CILINDRICO
14	3387161M2		**1**	PIN	GOUPILLE PERNO	BOLZEN PASADOR
15	3716129M3		**1**	CLEVIS PIN	AXE PERNO D'ATTACCO	SPLINTBOLZEN BULON CILINDRICO

Linkage	Top Link With Hook End
Attelage	Barre De 3eme Point A Crochet
Lenker	Oberlenker Mit Haken
Tiranteria	Maglia Superior Con Gancio
Enganches	Barra Enganche Con Gancho

40-25

1-ZQ07-004-B

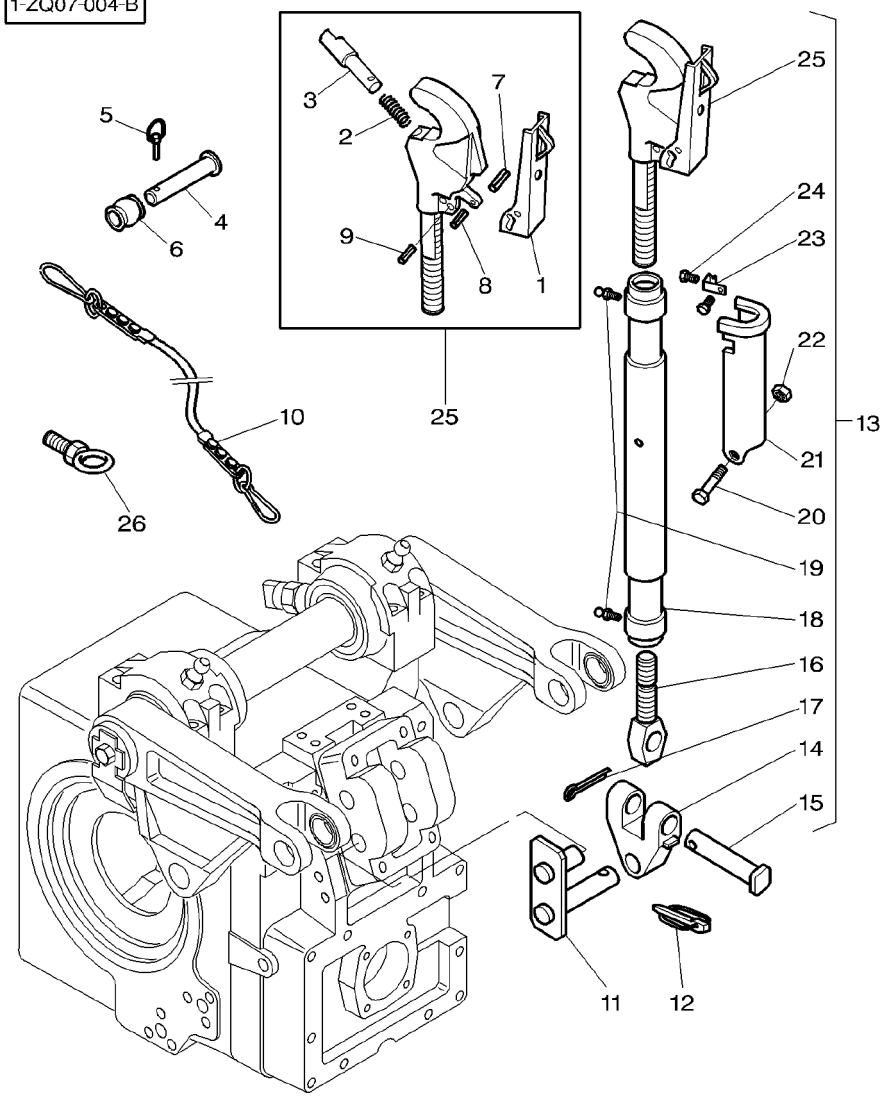

1	**3900589M91**	25	**1**	LEVER	LEVIER LEVA	HEBEL PALANCA
2	3900577M1	25	**1**	SPRING	RESSORT MOLLA	FEDER MUELLE
3	3715849M1	25	**1**	CLEVIS PIN	AXE PERNO D'ATTACCO	SPLINTBOLZEN BULON CILINDRICO
4	3582043M2	∅ 25,40MM ◀▶ 124MM	**1**	CLEVIS PIN	AXE PERNO D'ATTACCO	SPLINTBOLZEN BULON CILINDRICO
4	367073X1	∅ 31,75MM ◀▶ 130,2MM	**1**	CLEVIS PIN	AXE PERNO D'ATTACCO	SPLINTBOLZEN BULON CILINDRICO
5	3387161M2		**1**	PIN	GOUPILLE PERNO	BOLZEN PASADOR
6	***3042433M1***	CAT 2/3	**1**	TOGGLE	ROTULE ROTULA	GELENKZAPFEN PERNO ENGANCHE
6	**3042434M1**	CAT 3	**1**	TOGGLE	ROTULE ROTULA	GELENKZAPFEN PERNO ENGANCHE
7	3900578M1	25 6X20MM	**1**	PIN	GOUPILLE PERNO	BOLZEN PASADOR
8	390538X1	25 5X24MM	**1**	ROLL PIN	GOUPILLE ROULEE SPINA ELASTICA	SPANNHUELSE PASADOR ELASTICO
9	339080X1	25 6X24MM	**1**	ROLL PIN	GOUPILLE ROULEE SPINA ELASTICA	SPANNHUELSE PASADOR ELASTICO
10	3619220M1		**1**	CHAIN	CHAINE CATENA	KETTE CADENA
11	3716129M3		**1**	CLEVIS PIN	AXE PERNO D'ATTACCO	SPLINTBOLZEN BULON CILINDRICO
12	3387161M2		**1**	PIN	GOUPILLE PERNO	BOLZEN PASADOR
13	3791535M92	◀▶ 605/850MM	**1**	BAR	BARRE BARRA	STAB BARRA
14	3791541M1	13	**1**	CLEVIS	CHAPE GANCIO D'ATTACCO	GABELSTUECK GANCHO SEGURI.
15	3715690M1	13	**1**	CLEVIS PIN	AXE PERNO D'ATTACCO	SPLINTBOLZEN BULON CILINDRICO
16	3791540M1	13	**1**	DRAGLINK	TIRANT MAGLIA PER DRAGA	SCHUBSTANGE ENGANCHE DE TIRO
17	354092X1	13	**1**	PIN	GOUPILLE PERNO	BOLZEN PASADOR
18	3791538M1	13 ◀▶ 370MM	**1**	TUBE	TUBE TUBO	ROHR TUBO
19	3715689M1	13	**2**	GREASER	GRAISSEUR INGRASSATORE	FETTNIPPEL ENGRASADOR
20	390246X1	13	**1**	BOLT	BOULON BULLONE	MASCH.SCHRAUBE PERNO
21	3715685M91	13	**1**	LEVER	LEVIER LEVA	HEBEL PALANCA
22	394367X1	13	**1**	LOCKNUT	ECROU BLOCAGE AUTOBLOCCANTE	FLACHMUTTER CONTRATUERCA
23	3715691M1	13	**1**	SPRING	RESSORT MOLLA	FEDER MUELLE
24	3008179X1	13	**2**	SCREW METRIC	VIS METRIQUE VITE METRICA	SCHRAUBE METR TORNILLO METRICO

Linkage	Top Link With Hook End
Attelage	Barre De 3eme Point A Crochet
Lenker	Oberlenker Mit Haken
Tiranteria	Maglia Superior Con Gancio
Enganches	Barra Enganche Con Gancho

40-25

1-ZQ07-004-B

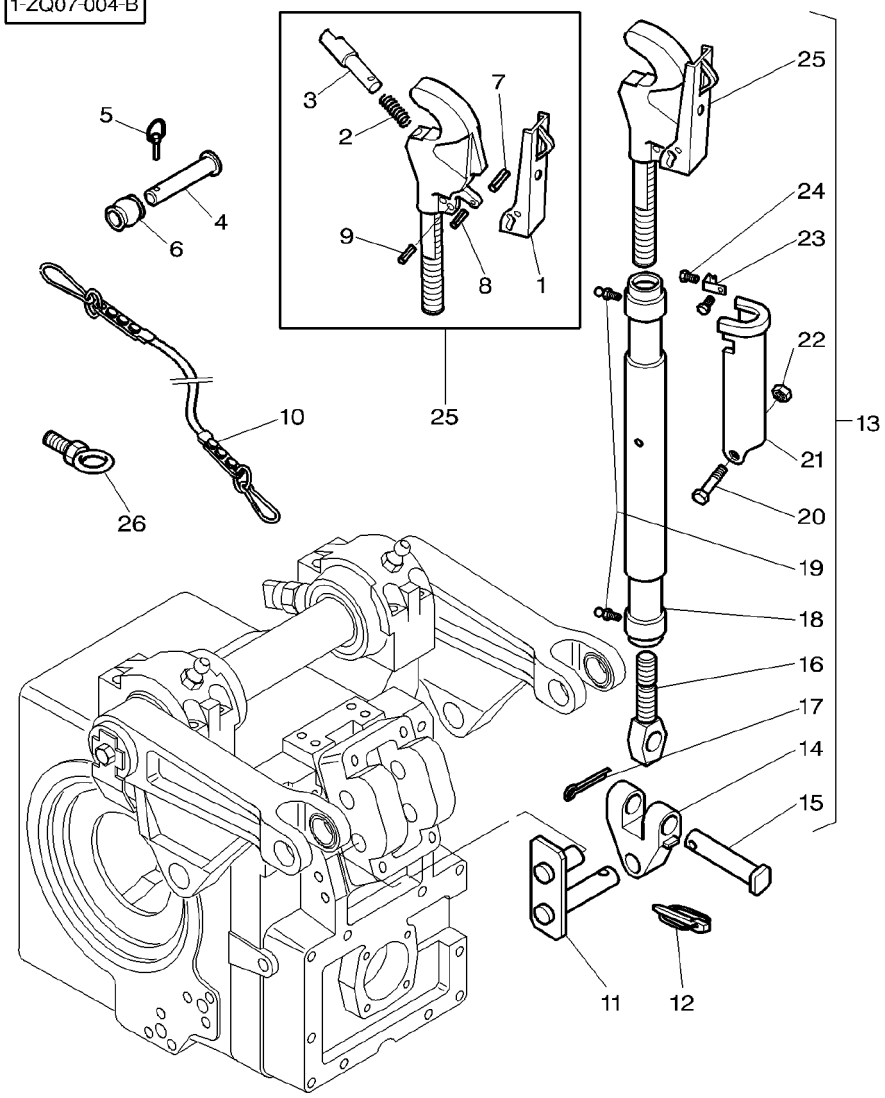

25	3715681M3	13	CAT 3	**1**	HOOK	CROCHET GANCIO
26	3580524M91			**1**	RING	ANNEAU ANELLO

HAKEN		
GANCHO		
RING		
ARO		

Top Link Lock
Verrouillage Barre De 3eme Point
Oberlenkerriegel
Cerrojo Barra Superior
Chiavistello Barra Superior

40-30

1-ZQ35-001-A

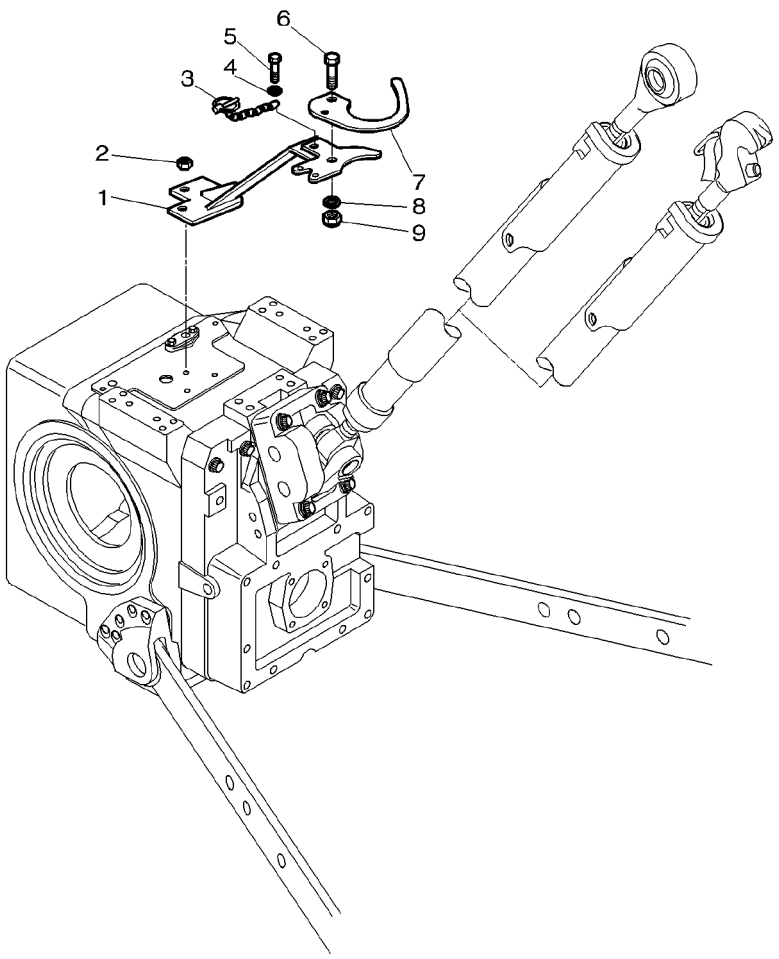

1	3792183M1		**1**	SUPPORT	SUPPORT SUPPORTO	LAGERUNG DISPOS.DE SOSTEN
2	1440330X1		**3**	LOCKNUT	ECROU BLOCAGE AUTOBLOCCANTE	FLACHMUTTER CONTRATUERCA
3	3712199M91		**1**	CHAIN	CHAINE CATENA	KETTE CADENA
4	390971X1		**1**	WASHER METRIC	RONDELLE METR. RONDELLA METRICO	SCHEIBE METRISCH ARANDELA METRICO
5	339560X1	M6X16MM	**1**	SCREW METRIC	VIS METRIQUE VITE METRICA	SCHRAUBE METR TORNILLO METRICO
6	339009X1	M8X35MM	**1**	BOLT METRIC	BOULON METRIQUE BULLONE METRICO	MASCH.SCHRB MET PERNO METRICO
7	3792255M1		**1**	LATCH	VERROU SALISCENDI	RIEGEL CERROJO
8	390972X1		**1**	WASHER METRIC	RONDELLE METR. RONDELLA METRICO	SCHEIBE METRISCH ARANDELA METRICO
9	394367X1		**1**	LOCKNUT	ECROU BLOCAGE AUTOBLOCCANTE	FLACHMUTTER CONTRATUERCA

1-ZQ10-001-B

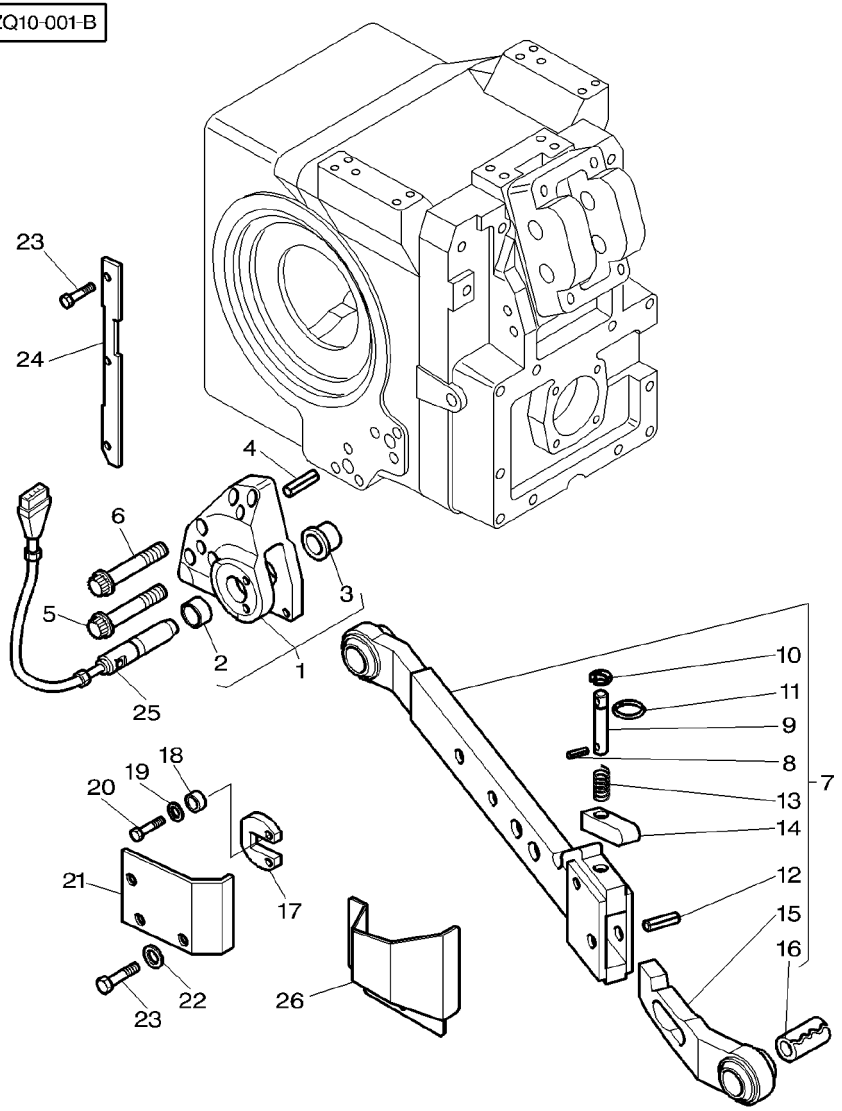

1	3716998M14	▶ ➡| H180022	1	CLEVIS	CHAPE GANCIO D'ATTACCO	GABELSTUECK GANCHO SEGURI.
1	3791868M11	▶ ➡ H180023	1	CLEVIS	CHAPE GANCIO D'ATTACCO	GABELSTUECK GANCHO SEGURI.
1	3716997M14	◀ ➡| H180022	1	CLEVIS	CHAPE GANCIO D'ATTACCO	GABELSTUECK GANCHO SEGURI.
1	3791867M11	◀ ➡ H180023	1	CLEVIS	CHAPE GANCIO D'ATTACCO	GABELSTUECK GANCHO SEGURI.
2	3716994M2	1	1	BUSH	BAGUE BOCCOLA	BUCHSE CASQUILLO
3	3716995M2	1	1	BUSH	BAGUE BOCCOLA	BUCHSE CASQUILLO
4	3716624M1		4	CENTRALISER	PION CENTRALIZZATORE	FUEHRUNGSKORB CENTRALIZADOR
5	3010434X1	M20x80	10	SCREW METRIC	VIS METRIQUE VITE METRICA	SCHRAUBE METR TORNILLO METRICO
6	3010558X1	M20x120	2	SCREW METRIC	VIS METRIQUE VITE METRICA	SCHRAUBE METR TORNILLO METRICO
7	3793226M91	◀ ⇔ 3792052M1	1	BAR	BARRE BARRA	STAB BARRA
7	3793227M91	▶ ⇔ 3792053M1	1	BAR	BARRE BARRA	STAB BARRA
8	3792592M1	7 ⇔ 3902001M1	1	PIN	GOUPILLE PERNO	BOLZEN PASADOR
9	3792594M1	7 ⇔ 3902004M1	1	CLEVIS PIN	AXE PERNO D'ATTACCO	SPLINTBOLZEN BULON CILINDRICO
10	3792590M1	7 ⇒ 3902006M1	1	WASHER	RONDELLE RONDELLA	UNTERLEGSCHEIBE ARANDELA
11	3792595M1	7 ⇔ 3902791M1	1	RING	ANNEAU ANELLO	RING ARO
12	3792589M1	7 ⇔ 3902005M1	1	PIN	GOUPILLE PERNO	BOLZEN PASADOR
13	3792591M1	7 ⇔ 3902007M1	1	SPRING	RESSORT MOLLA	FEDER MUELLE
14	3792593M1	7 ⇔ 3902002M1	1	CLEVIS PIN	AXE PERNO D'ATTACCO	SPLINTBOLZEN BULON CILINDRICO
15	3902794M1	7 ◀	1	STUB	EMBOUT CEPPO	STUMMEL SALIENTE
15	3902795M1	7 ▶	1	STUB	EMBOUT CEPPO	STUMMEL SALIENTE
16	3903215M1	7	1	BUSH	BAGUE BOCCOLA	BUCHSE CASQUILLO
17	3716499M1		2	PLATE	PLAQUE PIASTRA	PLATTE PLATO
18	3384183M2		4	BUSH	BAGUE BOCCOLA	BUCHSE CASQUILLO
19	385362X1		4	WASHER METRIC	RONDELLE METR. RONDELLA METRICO	SCHEIBE METRISCH ARANDELA METRICO
20	3001429X1	M10X35	4	SCREW	VIS VITE	SCHRAUBE TORNILLO
21	3716983M3	◀ ➡| H181010	1	PROTECTOR	PROTECTEUR PROTETTORE	SCHUTZ PROTECTOR

1-ZQ10-001-B

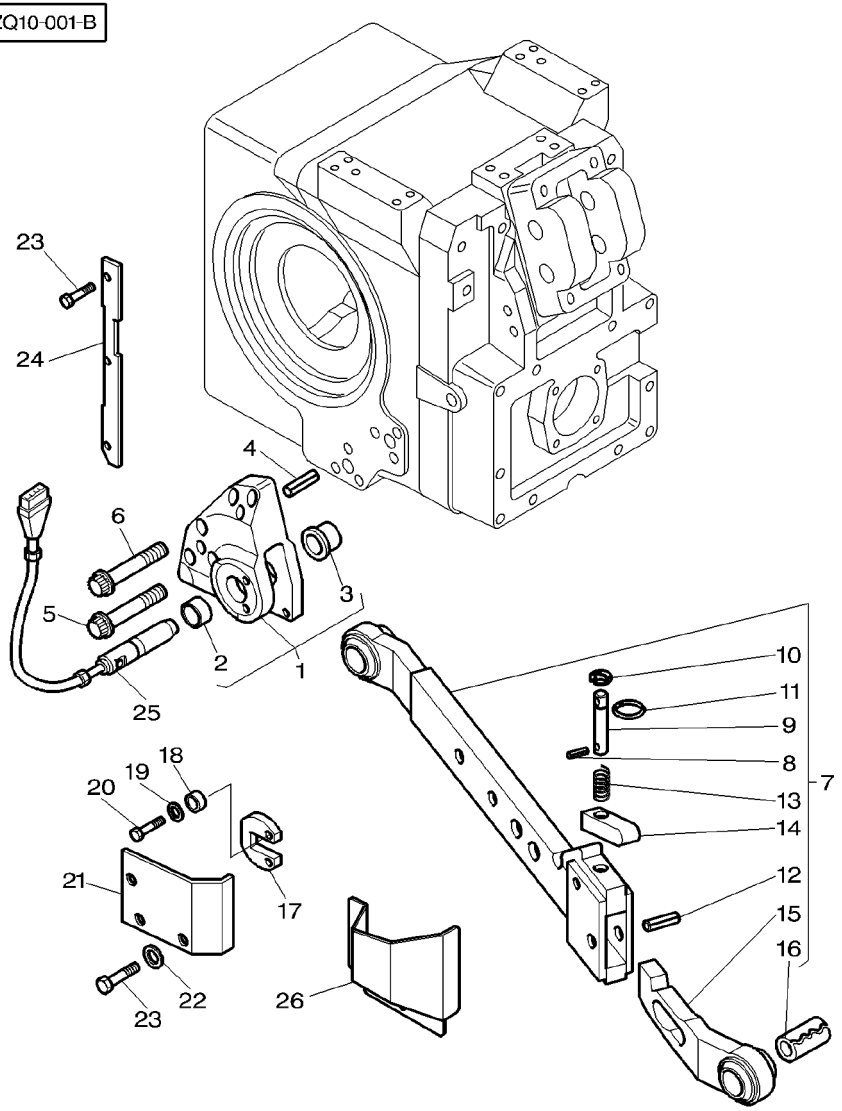

21	3716984M3	▶ ➡| H181010	**1**	PROTECTOR	PROTECTEUR PROTETTORE SCHUTZ PROTECTOR
22	390972X1		**6**	WASHER METRIC	RONDELLE METR. RONDELLA METRICO SCHEIBE METRISCH ARANDELA METRICO
23	339124X1	M8X16	**12**	SCREW METRIC	VIS METRIQUE VITE METRICA SCHRAUBE METR TORNILLO METRICO
24	3791193M1		**2**	COWL	GARANT CAPPOTTATURA AUFSATZ CAPERUZA
25	***3713764M1***		**2**	SENSING PIN	CAPTEUR EFFORT PRESA. ANSCHLUSS TOMA
26	3791630M1	◀ ➡| H181011	**1**	PROTECTOR	PROTECTEUR PROTETTORE SCHUTZ PROTECTOR
26	3791631M1	▶ ➡| H181011	**1**	PROTECTOR	PROTECTEUR PROTETTORE SCHUTZ PROTECTOR

Linkage **Attelage** **Lenker** **Tiranteria** **Enganches**	**Lower Cat 2 And 3** **Inferieur Cat 2 Et 3** **Unten Cat 2 Und 3** **Inferiore Cat 2 I 3** **Inferior Cat 2 Y 3**	**40-40**	**Up To H119030** **Jusqu Au H119030** **Bis Den H119030** **Fino A H119030** **Hasta H119030**

1-ZQ10-005-B

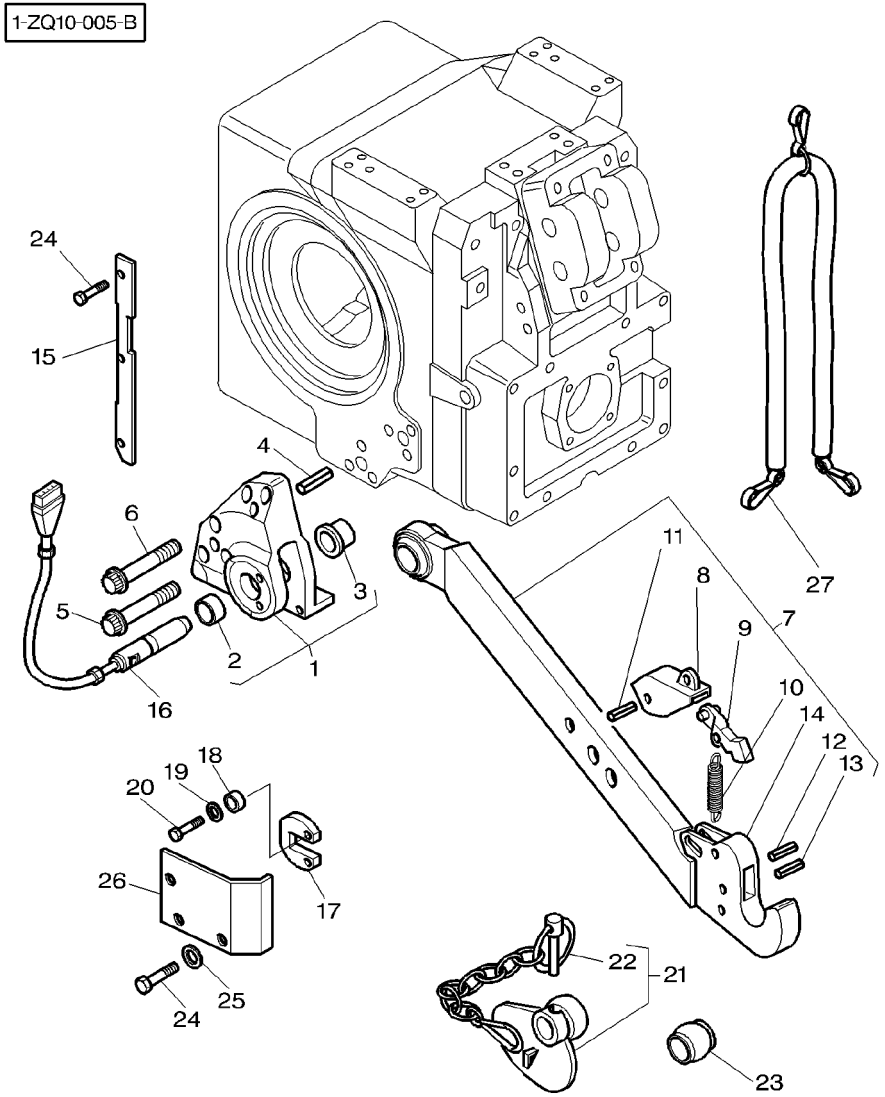

1	3716998M14	▶	**1**	CLEVIS	CHAPE GANCIO D'ATTACCO	GABELSTUECK GANCHO SEGURI.
1	3716997M14	◀	**1**	CLEVIS	CHAPE GANCIO D'ATTACCO	GABELSTUECK GANCHO SEGURI.
2	3716994M2	1	**1**	BUSH	BAGUE BOCCOLA	BUCHSE CASQUILLO
3	3716995M2	1	**1**	BUSH	BAGUE BOCCOLA	BUCHSE CASQUILLO
4	3716624M1		**4**	CENTRALISER	PION CENTRALIZZATORE	FUEHRUNGSKORB CENTRALIZADOR
5	3010434X1	M20x80	**10**	SCREW METRIC	VIS METRIQUE VITE METRICA	SCHRAUBE METR TORNILLO METRICO
6	3010558X1	M20x120	**2**	SCREW METRIC	VIS METRIQUE VITE METRICA	SCHRAUBE METR TORNILLO METRICO
7	**3616298M1**	◀	**1**	BAR	BARRE BARRA	STAB BARRA
7	**3616299M1**	▶	**1**	BAR	BARRE BARRA	STAB BARRA
8	**3103830M1**	7	**1**	LEVER	LEVIER LEVA	HEBEL PALANCA
9	3106461M1	7	**1**	RATCHET	CLIQUET DENTE ARRESTO	SCHALTKLINKE TRINQUETE
10	3101934M1	7	**1**	SPRING	RESSORT MOLLA	FEDER MUELLE
11	339290X1	7	**1**	PIN	GOUPILLE PERNO	BOLZEN PASADOR
12	3008317X1	7	**1**	PIN	GOUPILLE PERNO	BOLZEN PASADOR
13	339783X1	7	**1**	PIN	GOUPILLE PERNO	BOLZEN PASADOR
14		7 ■ REF. 7	**1**	BAR	BARRE BARRA	STAB BARRA
15	3791193M1		**2**	COWL	GARANT CAPPOTTATURA	AUFSATZ CAPERUZA
16	***3713764M1***	6T	**2**	SENSING PIN	CAPTEUR EFFORT PRESA.	ANSCHLUSS TOMA
17	3716499M1		**2**	PLATE	PLAQUE PIASTRA	PLATTE PLATO
18	3384183M2		**4**	BUSH	BAGUE BOCCOLA	BUCHSE CASQUILLO
19	385362X1		**4**	WASHER METRIC	RONDELLE METR. RONDELLA METRICO	SCHEIBE METRISCH ARANDELA METRICO
20	3001429X1	M10X35	**4**	SCREW	VIS VITE	SCHRAUBE TORNILLO
21	***3042427M1***	CAT 2/3	**2**	TOGGLE	ROTULE ROTULA	GELENKZAPFEN PERNO ENGANCHE
21	***3042428M1***	CAT 3	**2**	TOGGLE	ROTULE ROTULA	GELENKZAPFEN PERNO ENGANCHE
22	3102086M91	21	**1**	LINCH PIN	GOUPLLE FERGUSON COPIGLIA DI FERM	VORSTECKER PASADOR PARA EJE
23	***3042430M1***	CAT 2/3	**2**	TOGGLE	ROTULE ROTULA	GELENKZAPFEN PERNO ENGANCHE

Linkage **Attelage** **Lenker** **Tiranteria** **Enganches**	**Lower Cat 2 And 3** **Inferieur Cat 2 Et 3** **Unten Cat 2 Und 3** **Inferiore Cat 2 I 3** **Inferior Cat 2 Y 3**	**40-40**	**Up To H119030** **Jusqu Au H119030** **Bis Den H119030** **Fino A H119030** **Hasta H119030**

1-ZQ10-005-B

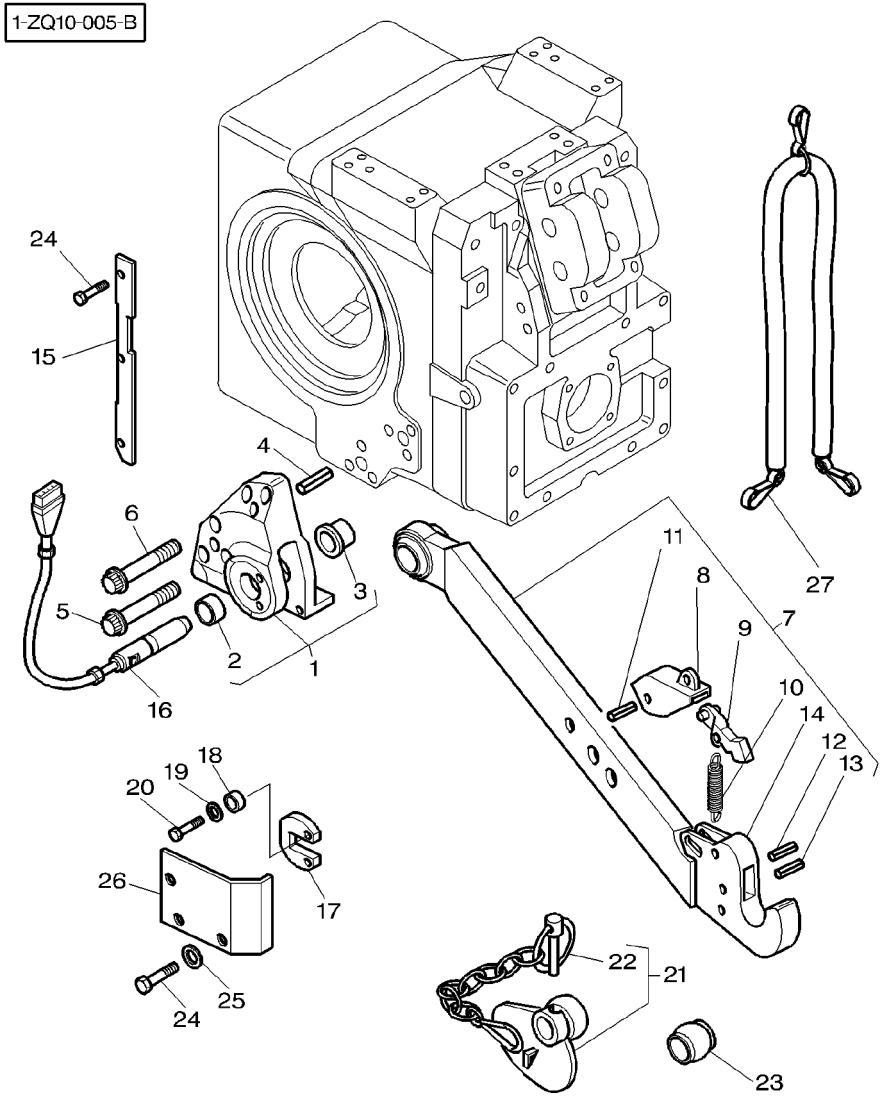

23	***3042431M1***	CAT 3	**2**	TOGGLE	ROTULE ROTULA	GELENKZAPFEN PERNO ENGANCHE
24	339124X1	M8X16	**12**	SCREW METRIC	VIS METRIQUE VITE METRICA	SCHRAUBE METR TORNILLO METRICO
25	390972X1		**6**	WASHER METRIC	RONDELLE METR. RONDELLA METRICO	SCHEIBE METRISCH ARANDELA METRICO
26	3716983M3	◀	**1**	PROTECTOR	PROTECTEUR PROTETTORE	SCHUTZ PROTECTOR
26	3716984M3	▶	**1**	PROTECTOR	PROTECTEUR PROTETTORE	SCHUTZ PROTECTOR
27	3619219M1	◀▶ 3700MM	**1**	CHAIN	CHAINE CATENA	KETTE CADENA

Linkage Attelage Lenker Tiranteria Enganches	Lower Cat 2 And 3 Inferieur Cat 2 Et 3 Unten Cat 2 Und 3 Inferiore Cat 2 I 3 Inferior Cat 2 Y 3	**40-45**	From H119031 A Partir Du H119031 Ab Den H119031 A Partir Da H119031 A Partir De H119031

1-ZQ10-002-C

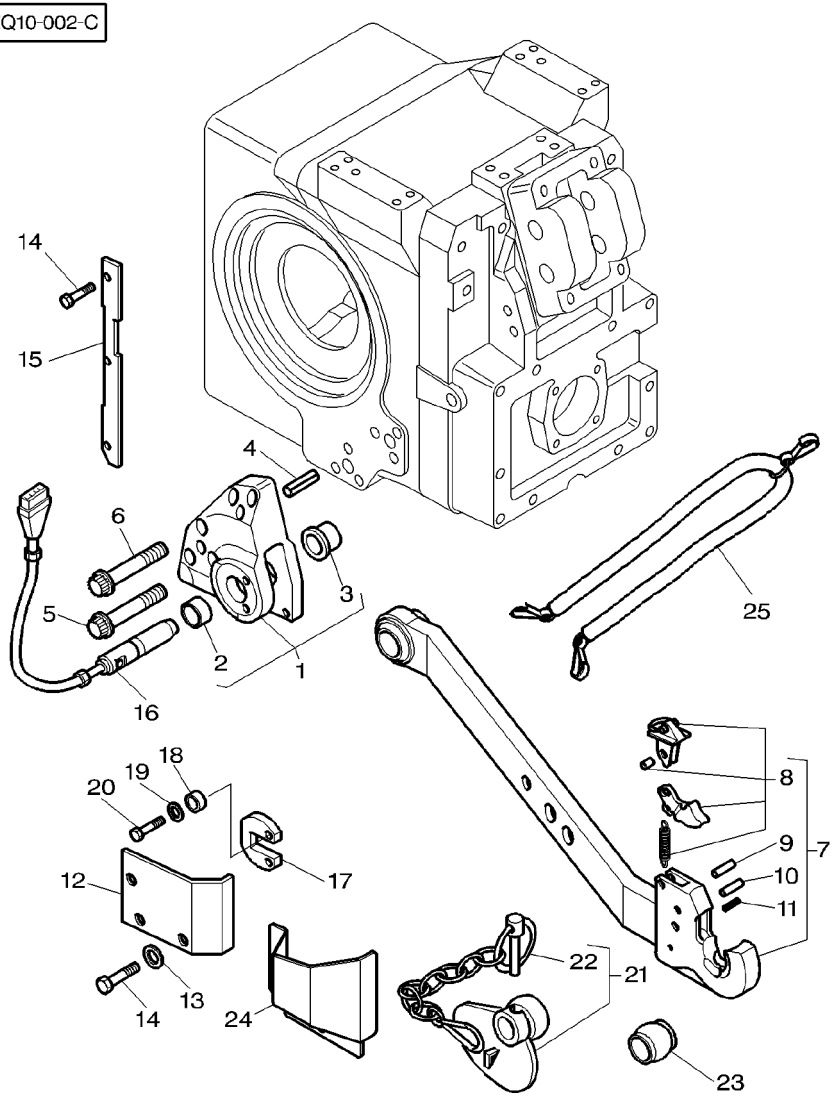

1	3716998M14	▶ H180022		1	CLEVIS	CHAPE GANCIO D'ATTACCO	GABELSTUECK GANCHO SEGURI.
1	3791868M11	▶ H180023		1	CLEVIS	CHAPE GANCIO D'ATTACCO	GABELSTUECK GANCHO SEGURI.
1	3716997M14	◀ H180022		1	CLEVIS	CHAPE GANCIO D'ATTACCO	GABELSTUECK GANCHO SEGURI.
1	3791867M11	◀ H180023		1	CLEVIS	CHAPE GANCIO D'ATTACCO	GABELSTUECK GANCHO SEGURI.
2	3716994M2	1		1	BUSH	BAGUE BOCCOLA	BUCHSE CASQUILLO
3	3716995M2	1		1	BUSH	BAGUE BOCCOLA	BUCHSE CASQUILLO
4	3716624M1			4	CENTRALISER	PION CENTRALIZZATORE	FUEHRUNGSKORB CENTRALIZADOR
5	3010434X1	M20x80		10	SCREW METRIC	VIS METRIQUE VITE METRICA	SCHRAUBE METR TORNILLO METRICO
6	3010558X1	M20x120		2	SCREW METRIC	VIS METRIQUE VITE METRICA	SCHRAUBE METR TORNILLO METRICO
7	3792539M1	◀		1	BAR	BARRE BARRA	STAB BARRA
7	3792538M1	▶		1	BAR	BARRE BARRA	STAB BARRA
8	3903314M91	7		1	KIT, REPAIR	JEU REPARATION KIT RIPARAZIONE	REPARATURSATZ JUEGO REPARACION
9	3006429X1	7		1	PIN	GOUPILLE PERNO	BOLZEN PASADOR
10	3008317X1	7		1	PIN	GOUPILLE PERNO	BOLZEN PASADOR
11	339783X1	7		1	PIN	GOUPILLE PERNO	BOLZEN PASADOR
12	3716983M3	◀ H180022		1	PROTECTOR	PROTECTEUR PROTETTORE	SCHUTZ PROTECTOR
12	3716984M3	▶ H180022		1	PROTECTOR	PROTECTEUR PROTETTORE	SCHUTZ PROTECTOR
13	390972X1			6	WASHER METRIC	RONDELLE METR. RONDELLA METRICO	SCHEIBE METRISCH ARANDELA METRICO
14	339124X1	M8X16		12	SCREW METRIC	VIS METRIQUE VITE METRICA	SCHRAUBE METR TORNILLO METRICO
15	3791193M1			2	COWL	GARANT CAPPOTTATURA	AUFSATZ CAPERUZA
16	***3713764M1***	6T		2	SENSING PIN	CAPTEUR EFFORT PRESA.	ANSCHLUSS TOMA
17	3716499M1			2	PLATE	PLAQUE PIASTRA	PLATTE PLATO
18	3384183M2			4	BUSH	BAGUE BOCCOLA	BUCHSE CASQUILLO
19	385362X1			4	WASHER METRIC	RONDELLE METR. RONDELLA METRICO	SCHEIBE METRISCH ARANDELA METRICO
20	3001429X1	M10X35		4	SCREW	VIS VITE	SCHRAUBE TORNILLO
21	***3042427M1***	CAT 2/3		2	TOGGLE	ROTULE ROTULA	GELENKZAPFEN PERNO ENGANCHE

Linkage	Lower Cat 2 And 3	40-45	From H119031
Attelage	Inferieur Cat 2 Et 3		A Partir Du H119031
Lenker	Unten Cat 2 Und 3		Ab Den H119031
Tiranteria	Inferiore Cat 2 I 3		A Partir Da H119031
Enganches	Inferior Cat 2 Y 3		A Partir De H119031

1-ZQ10-002-C

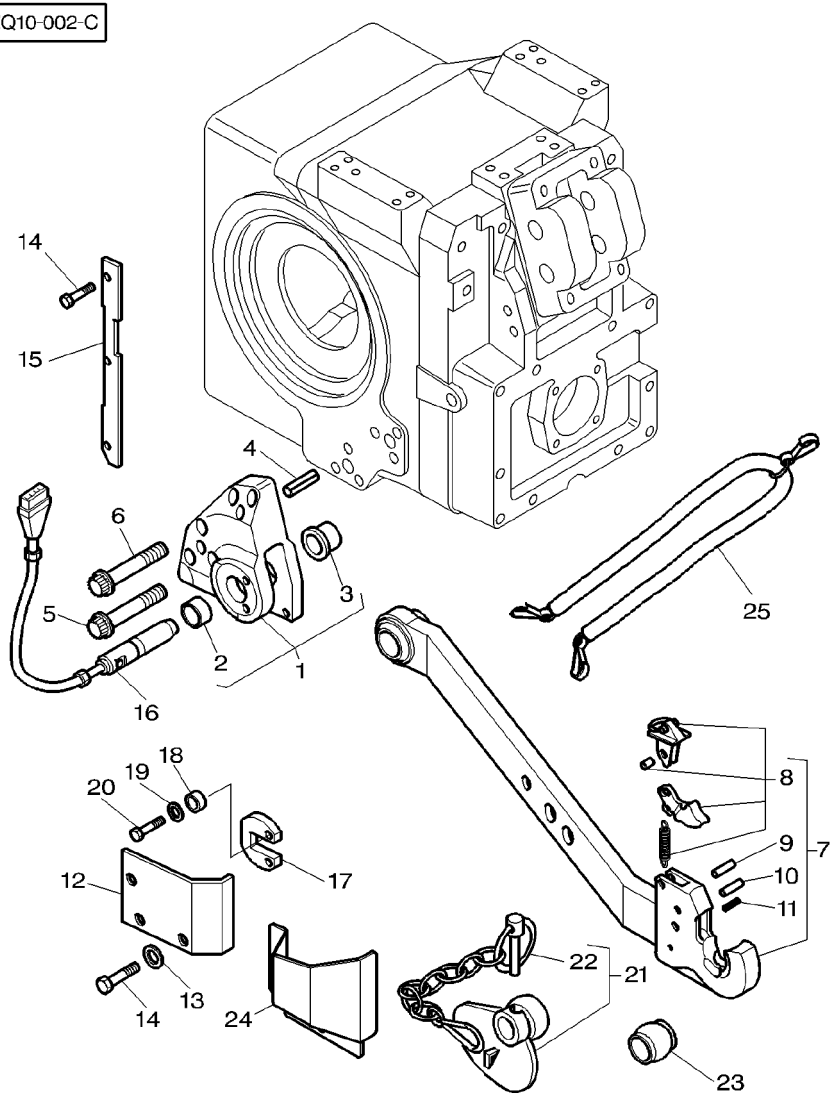

21	***3042428M1***	CAT 3	**2**	TOGGLE	ROTULE ROTULA	GELENKZAPFEN PERNO ENGANCHE
22	3102086M91	21	**1**	LINCH PIN	GOUPLLE FERGUSON COPIGLIA DI FERM	VORSTECKER PASADOR PARA EJE
23	***3042430M1***	CAT 2/3	**2**	TOGGLE	ROTULE ROTULA	GELENKZAPFEN PERNO ENGANCHE
23	***3042431M1***	CAT 3	**2**	TOGGLE	ROTULE ROTULA	GELENKZAPFEN PERNO ENGANCHE
24	3791630M1	◀ ▶ H180023	**1**	PROTECTOR	PROTECTEUR PROTETTORE	SCHUTZ PROTECTOR
24	3791631M1	▶ ▶ H180023	**1**	PROTECTOR	PROTECTEUR PROTETTORE	SCHUTZ PROTECTOR
25	3619219M1	◀▶ 3700MM	**1**	CHAIN	CHAINE CATENA	KETTE CADENA

Linkage	Swinging Drawbar Support
Attelage	Support De Barre Oscillante
Lenker	Zugstangestuetze
Tiranteria	Support De Barra Oscillante
Enganches	Support De Barra De Tiro

40-50

1-ZQ36-004-A

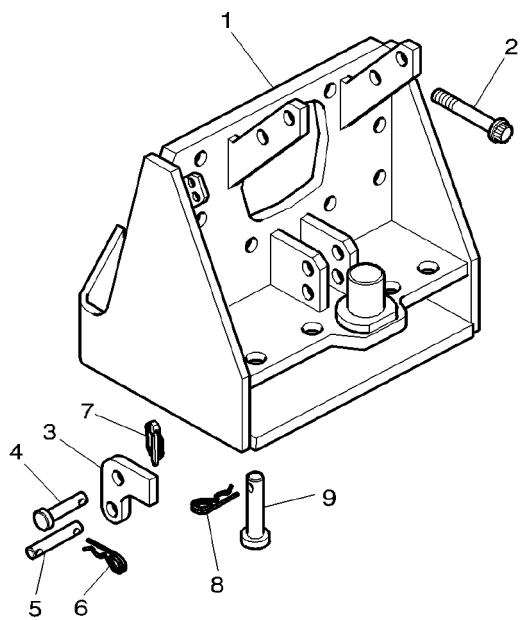

1	3716948M93		**1**	SUPPORT	SUPPORT SUPPORTO LAGERUNG DISPOS.DE SOSTEN
2	3010561X1	M20X50	**2**	SCREW	VIS VITE SCHRAUBE TORNILLO
2	3010562X1	M20X230	**8**	SCREW	VIS VITE SCHRAUBE TORNILLO
3	3582213M3		**1**	HOOK	CROCHET GANCIO HAKEN GANCHO
4	3582216M1		**1**	CLEVIS PIN	AXE PERNO D'ATTACCO SPLINTBOLZEN BULON CILINDRICO
5	3582197M1		**1**	CLEVIS PIN	AXE PERNO D'ATTACCO SPLINTBOLZEN BULON CILINDRICO
6	391403X1		**1**	PIN	GOUPILLE PERNO BOLZEN PASADOR
7	3382824M1		**1**	PIN	GOUPILLE PERNO BOLZEN PASADOR
8	3010932X1	⇔ 3010632X1	**2**	PIN	GOUPILLE PERNO BOLZEN PASADOR
9	3010631X1		**2**	CLEVIS PIN	AXE PERNO D'ATTACCO SPLINTBOLZEN BULON CILINDRICO

1-ZQ36-006-A

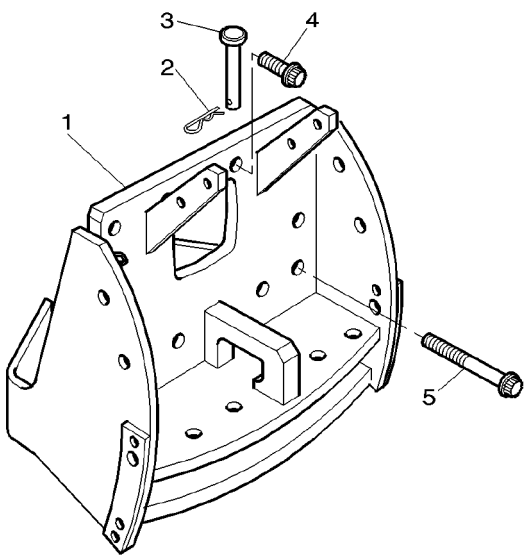

1	3716954M92		**1**	SUPPORT	SUPPORT SUPPORTO	LAGERUNG DISPOS.DE SOSTEN
2	3010932X1	⇔ 3010632X1	**2**	PIN	GOUPILLE PERNO	BOLZEN PASADOR
3	3010631X1		**2**	CLEVIS PIN	AXE PERNO D'ATTACCO	SPLINTBOLZEN BULON CILINDRICO
4	3010561X1	M20X50MM	**2**	SCREW	VIS VITE	SCHRAUBE TORNILLO
5	3010562X1	M20X230MM	**8**	SCREW	VIS VITE	SCHRAUBE TORNILLO

1-ZQ36-005-A

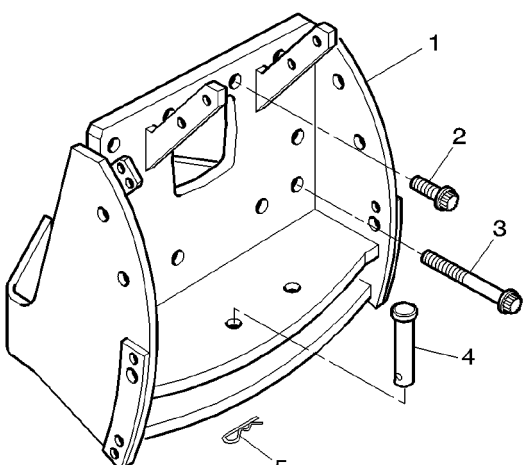

1	3791475M91		**1**	SUPPORT	SUPPORT SUPPORTO	LAGERUNG DISPOS.DE SOSTEN
2	3010561X1	M20X50	**2**	SCREW	VIS VITE	SCHRAUBE TORNILLO
3	3010562X1	M20X230	**8**	SCREW	VIS VITE	SCHRAUBE TORNILLO
4	3010631X1		**2**	CLEVIS PIN	AXE PERNO D'ATTACCO	SPLINTBOLZEN BULON CILINDRICO
5	3010932X1	⇔ 3010632X1	**2**	PIN	GOUPILLE PERNO	BOLZEN PASADOR

Linkage **Attelage** **Lenker** **Tiranteria** **Enganches**	**Swinging Drawbar Support** **Support De Barre Oscillante** **Zugstangestuetze** **Support De Barra Oscillante** **Support De Barra De Tiro**	**40-65**

1-ZQ36-007-B

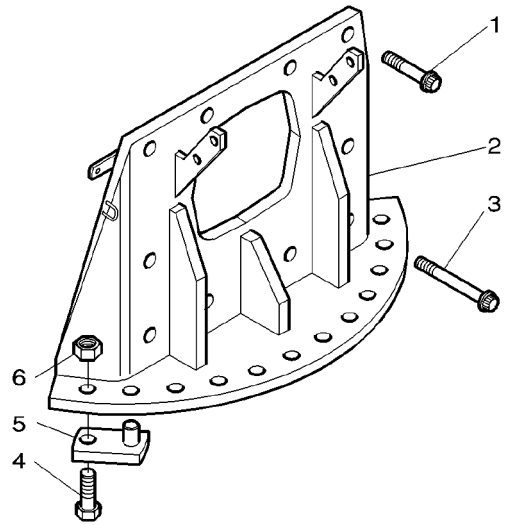

1	3010561X1	M20X50	**2** SCREW	VIS VITE	SCHRAUBE TORNILLO
2	3791542M91		**1** SUPPORT	SUPPORT SUPPORTO	LAGERUNG DISPOS.DE SOSTEN
3	3010562X1	M20X230	**8** SCREW	VIS VITE	SCHRAUBE TORNILLO
4	1442668X1	M20X70	**2** SCREW	VIS VITE	SCHRAUBE TORNILLO
5	3791677M92		**2** PLATE	PLAQUE PIASTRA	PLATTE PLATO
6	339035X1	M20	**2** NUT METRIC	ECROU METRIQUE DADO METRICO	MUTTER METRISCH TUERCA METRICO

1-ZQ36-010-A

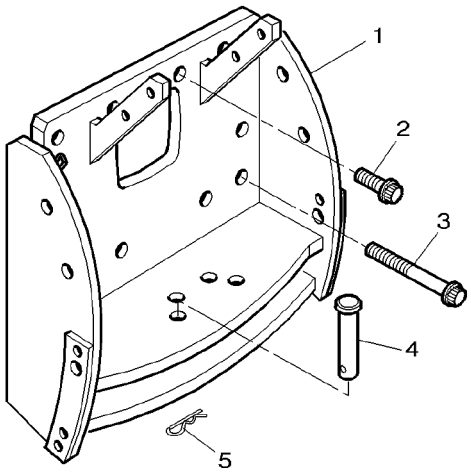

1	3792408M91	[A]	**1**	SUPPORT	SUPPORT SUPPORTO LAGERUNG DISPOS.DE SOSTEN
2	3010561X1	M20X50	**2**	SCREW	VIS VITE SCHRAUBE TORNILLO
3	3010562X1	M20X230	**8**	SCREW	VIS VITE SCHRAUBE TORNILLO
4	3010560X1		**2**	CLEVIS PIN	AXE PERNO D'ATTACCO SPLINTBOLZEN BULON CILINDRICO
5	365139X1		**2**	HAIR PIN	EPINGLE FORCINA SICHERUNGSFEDER RETENEDOR ELAST

[A] WITH TRAILED IMPLEMEMT CONTROL
AVEC CONTROLE OUTILS TRAINES
MIT ANGEHAENTES GERAET BEDIENUNG
CON CONTROLLO ATTREZZO TRAINATO
CON CONTROL APERO REMOLCADO

Hitch
Crochet D'Attelage
Anhaengekupplung
Attacco
Enganche

40-75

1-ZQ18-005-B

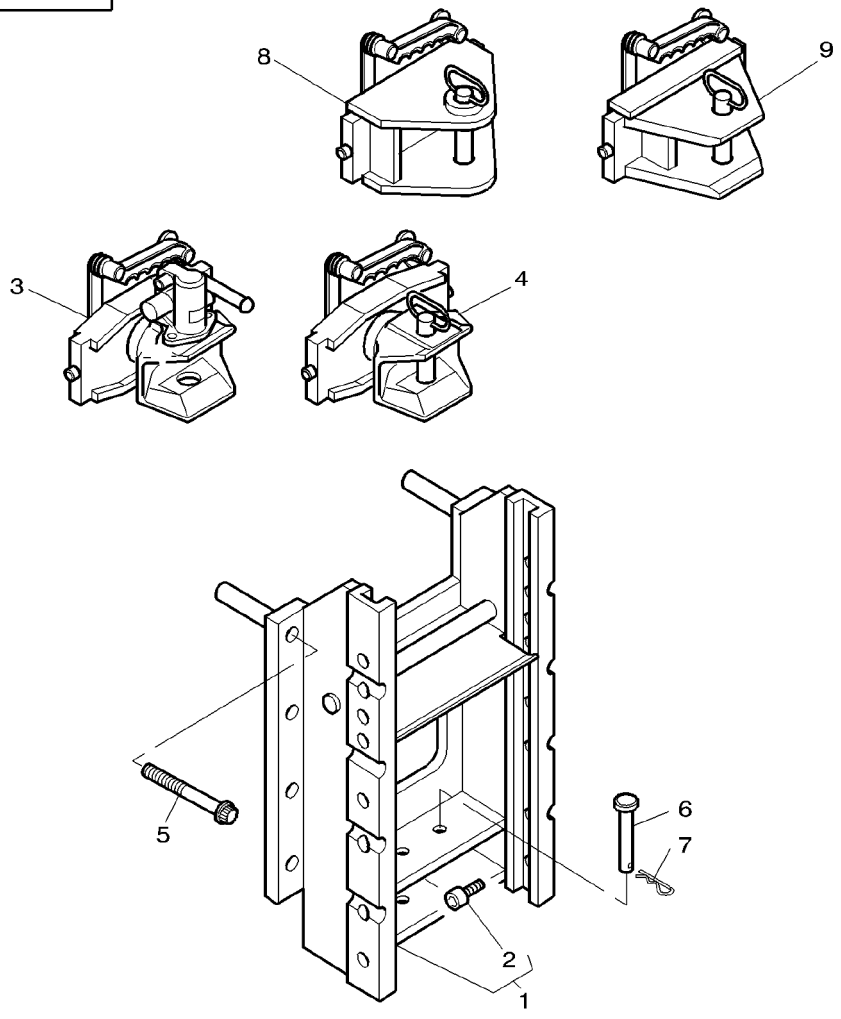

1	3791483M1		
1	3792574M1	[A]	
2	339114X1	1	M12X25
3	3791484M1	(D) 40−95 No	
3	3792433M1	(GB) 40−95 No	
4	3791502M1		
5	3010562X1		M20X230
5	3010777X1		M20X210
6	3010560X1		
7	3010932X1	⇔ 3010632X1	
8	3792934M91	(I) 20 T 40−90 No 5	
9	3792932M91	(I) 6 T 40−90 No 1	

[A] WITH TRAILED IMPLEMEMT CONTROL
AVEC CONTROLE OUTILS TRAINES
MIT ANGEHAENTES GERAET BEDIENUNG
CON CONTROLLO ATTREZZO TRAINATO
CON CONTROL APERO REMOLCADO

1	SUPPORT	SUPPORT	LAGERUNG
		SUPPORTO	DISPOS.DE SOSTEN
1	SUPPORT	SUPPORT	LAGERUNG
		SUPPORTO	DISPOS.DE SOSTEN
1	SCREW METRIC	VIS METRIQUE	SCHRAUBE METR
		VITE METRICA	TORNILLO METRICO
1	CLEVIS	CHAPE	GABELSTUECK
		GANCIO D'ATTACCO	GANCHO SEGURI.
1	CLEVIS	CHAPE	GABELSTUECK
		GANCIO D'ATTACCO	GANCHO SEGURI.
1	CLEVIS	CHAPE	GABELSTUECK
		GANCIO D'ATTACCO	GANCHO SEGURI.
8	SCREW	VIS	SCHRAUBE
		VITE	TORNILLO
2	SCREW METRIC	VIS METRIQUE	SCHRAUBE METR
		VITE METRICA	TORNILLO METRICO
2	CLEVIS PIN	AXE	SPLINTBOLZEN
		PERNO D'ATTACCO	BULON CILINDRICO
2	PIN	GOUPILLE	BOLZEN
		PERNO	PASADOR
1	CLEVIS	CHAPE	GABELSTUECK
		GANCIO D'ATTACCO	GANCHO SEGURI.
1	CLEVIS	CHAPE	GABELSTUECK
		GANCIO D'ATTACCO	GANCHO SEGURI.

Hitch
Crochet D'Attelage
Anhaengekupplung
Attacco
Enganche

40-80

1-ZQ18-006-B

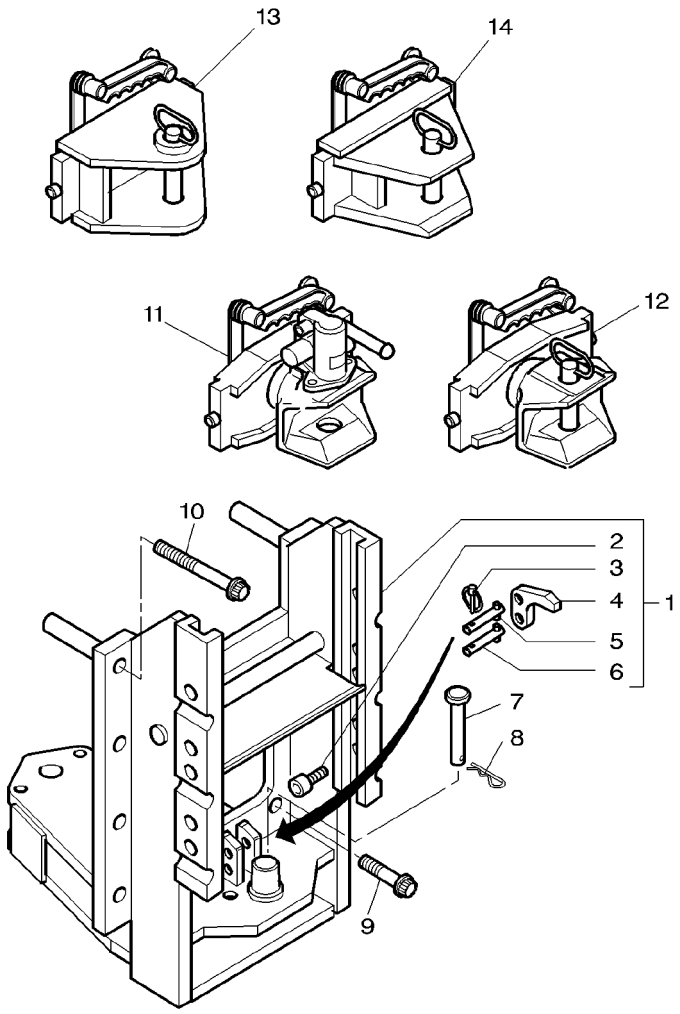

1	3791835M1		**1**	SUPPORT	SUPPORT SUPPORTO	LAGERUNG DISPOS.DE SOSTEN
2	339114X1	1 M12X25	**1**	SCREW METRIC	VIS METRIQUE VITE METRICA	SCHRAUBE METR TORNILLO METRICO
3	3382825M1	1	**1**	PIN	GOUPILLE PERNO	BOLZEN PASADOR
4	3903017M1	1	**1**	HOOK	CROCHET GANCIO	HAKEN GANCHO
5	3714805M1	1	**1**	CLEVIS PIN	AXE PERNO D'ATTACCO	SPLINTBOLZEN BULON CILINDRICO
6	3714804M1	1	**1**	CLEVIS PIN	AXE PERNO D'ATTACCO	SPLINTBOLZEN BULON CILINDRICO
7	3010560X1		**2**	CLEVIS PIN	AXE PERNO D'ATTACCO	SPLINTBOLZEN BULON CILINDRICO
8	3010932X1	⇔ 3010632X1	**2**	PIN	GOUPILLE PERNO	BOLZEN PASADOR
9	3010777X1	M20X210	**2**	SCREW METRIC	VIS METRIQUE VITE METRICA	SCHRAUBE METR TORNILLO METRICO
10	3010562X1	M20X230	**8**	SCREW	VIS VITE	SCHRAUBE TORNILLO
11	3791484M1	(D) 👁 40–95 No	**1**	CLEVIS	CHAPE GANCIO D'ATTACCO	GABELSTUECK GANCHO SEGURI.
11	3792433M1	👁 40–95 No	**1**	CLEVIS	CHAPE GANCIO D'ATTACCO	GABELSTUECK GANCHO SEGURI.
12	3791502M1	👁 40–100 No	**1**	CLEVIS	CHAPE GANCIO D'ATTACCO	GABELSTUECK GANCHO SEGURI.
13	3792934M91	(I) 20 T 👁 40–90 No 5	**1**	CLEVIS	CHAPE GANCIO D'ATTACCO	GABELSTUECK GANCHO SEGURI.
14	3792932M91	(I) 6 T 👁 40–90 No 1	**1**	CLEVIS	CHAPE GANCIO D'ATTACCO	GABELSTUECK GANCHO SEGURI.

Hitch
Crochet D'Attelage
Anhaengekupplung
Attacco
Enganche

40-85

Hay Ladder Support For Automatic Hook "Dromone"
Support Echelle Pour Crochet Automatique "Dromone"
Ladegatter Lagerung Fur Automatish Zughaken "Dromo Ne"
Supporto Scala Per Gangio Automatico "Dromone"
Dispos. De Sosten Ladral Para Gancho Automatico "D Romone"

1-ZQ18-009-A

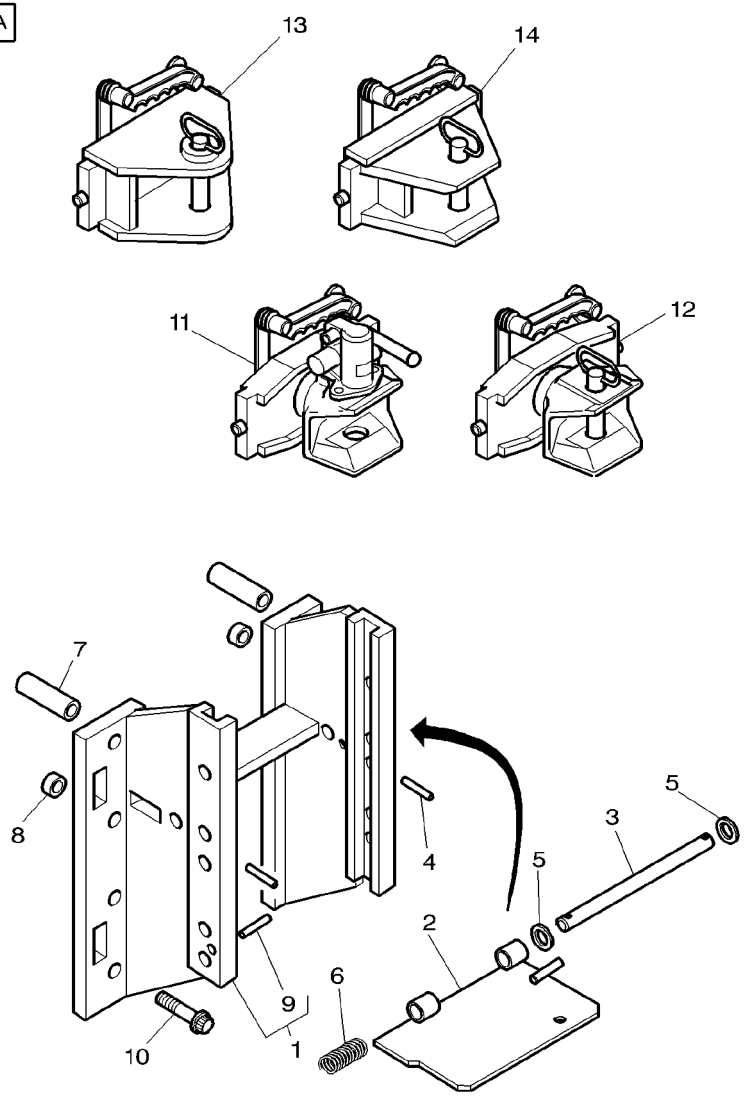

1	3794221M91		**1**	SUPPORT	SUPPORT SUPPORTO	LAGERUNG DISPOS.DE SOSTEN
2	3794230M91		**1**	COWL	GARANT CAPPOTTATURA	AUFSATZ CAPERUZA
3	3794227M1		**1**	CLEVIS PIN	AXE PERNO D'ATTACCO	SPLINTBOLZEN BULON CILINDRICO
4	391018X1	∅ 5X35	**2**	PIN	GOUPILLE PERNO	BOLZEN PASADOR
5	390975X1		**2**	WASHER METRIC	RONDELLE METR. RONDELLA METRICO	SCHEIBE METRISCH ARANDELA METRICO
6	3794614M1		**1**	SPRING	RESSORT MOLLA	FEDER MUELLE
7	3794663M1		**2**	SPACER	ENTRETOISE DISTANZIALE	ABSTANDSTUECK PIEZA DISTANCIA
8	3794662M1		**2**	BUSH	BAGUE BOCCOLA	BUCHSE CASQUILLO
9	3794232M1	1	**1**	THRUSTER	ARRETOIR SPINGITORE	DRUCKRING PROPULSOR
10	3010997X1	M20X240	**8**	SCREW	VIS VITE	SCHRAUBE TORNILLO
11	3791484M1	(D) 40−95 No	**1**	CLEVIS	CHAPE GANCIO D'ATTACCO	GABELSTUECK GANCHO SEGURI.
11	3792433M1	40−95 No	**1**	CLEVIS	CHAPE GANCIO D'ATTACCO	GABELSTUECK GANCHO SEGURI.
12	3791502M1	40−100 No	**1**	CLEVIS	CHAPE GANCIO D'ATTACCO	GABELSTUECK GANCHO SEGURI.
13	3792934M91	(I) 20 T 40−90 No 5	**1**	CLEVIS	CHAPE GANCIO D'ATTACCO	GABELSTUECK GANCHO SEGURI.
14	3792932M91	(I) 6 T ZQ181007 1	**1**	CLEVIS	CHAPE GANCIO D'ATTACCO	GABELSTUECK GANCHO SEGURI.

Hitch
Crochet D'Attelage
Anhaengekupplung
Attacco
Enganche

40-90

Cramer
Cramer
Cramer
Cramer
Cramer

1-ZQ18-007-A

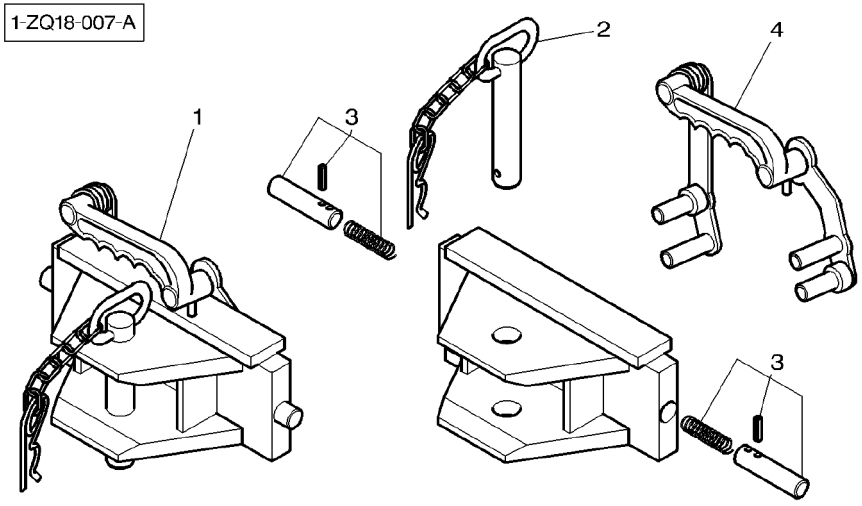

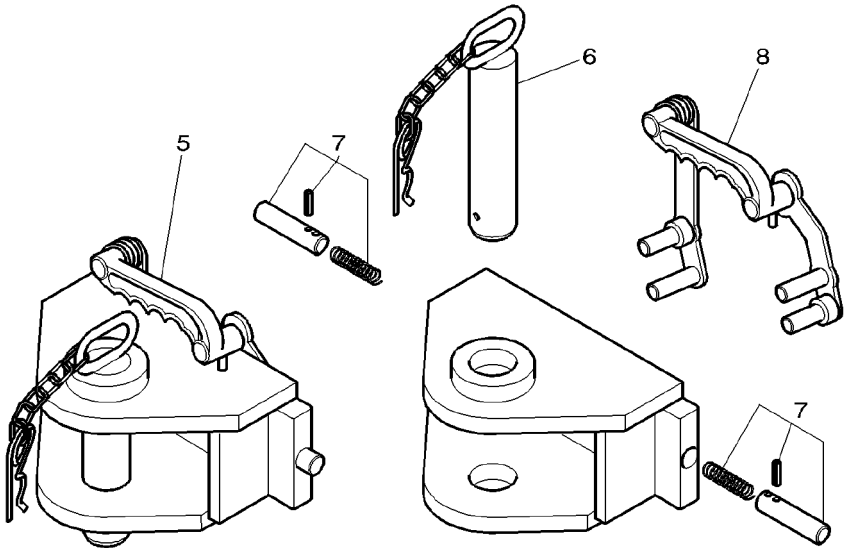

1	3792932M91	ⓘ 6 T	**1**	CLEVIS	CHAPE GANCIO D'ATTACCO	GABELSTUECK GANCHO SEGURI.
2	3903398M91	1 ∅ 28MM	**1**	PIN	GOUPILLE PERNO	BOLZEN PASADOR
3	3903394M91	1	**1**	KIT, ROD	JEU TIGES KIT ASTA	SATZ STANGEN JUEGO DE BIELAS
4	3903431M91	1	**1**	LINKAGE	ARTICULATION TIRANTERIA	GESTAENGE VARILLAJE
5	3792934M91	ⓘ 20 T	**1**	CLEVIS	CHAPE GANCIO D'ATTACCO	GABELSTUECK GANCHO SEGURI.
6	3903397M91	5 ∅ 50MM	**1**	PIN	GOUPILLE PERNO	BOLZEN PASADOR
7	3903394M91	5	**1**	KIT, ROD	JEU TIGES KIT ASTA	SATZ STANGEN JUEGO DE BIELAS
8	3107940M92	5	**1**	LINKAGE	ARTICULATION TIRANTERIA	GESTAENGE VARILLAJE

Hitch
Crochet D'Attelage
Anhaengekupplung
Attacco
Enganche

40-95

1-ZQ18-003-A

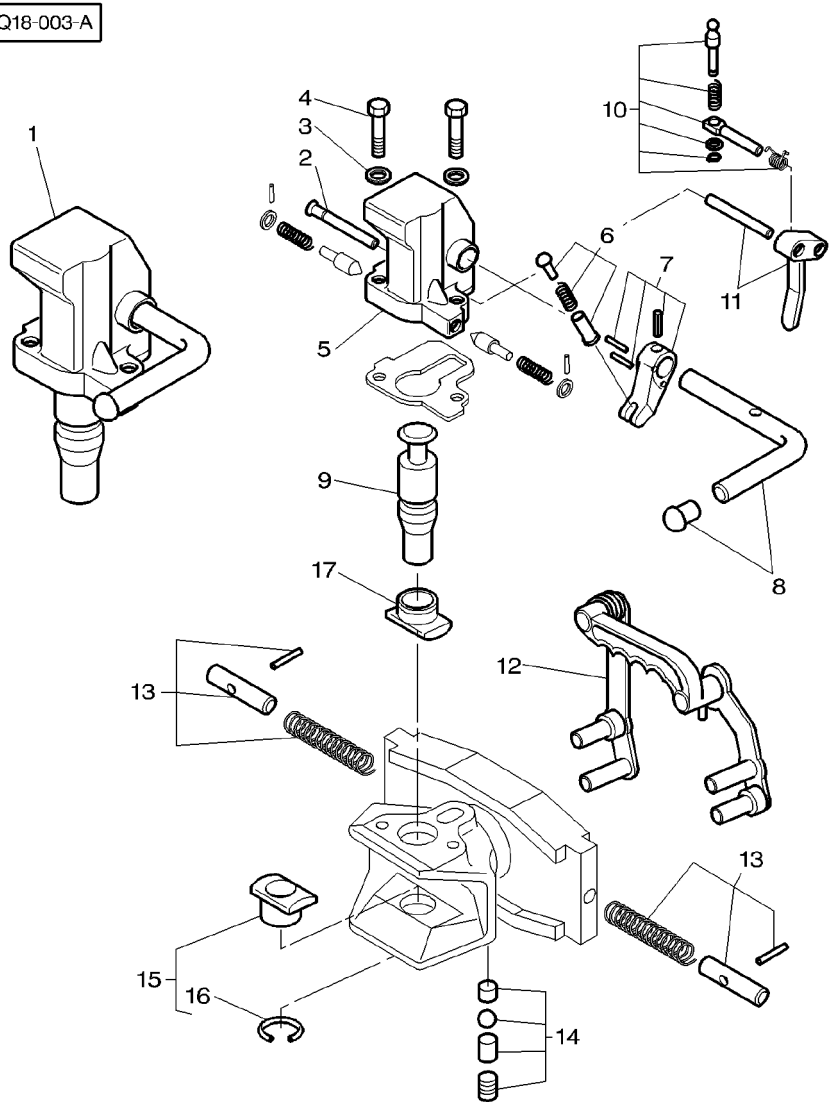

1	3902974M91		Ⓓ		**1**	HEAD	TETE / TESTA	KOPF / CULATA
			∅	37MM				
1	3903268M91		∅	32MM	**1**	HEAD	TETE / TESTA	KOPF / CULATA
2	3902982M1	1	Ⓓ		**1**	CLEVIS PIN	AXE / PERNO D'ATTACCO	SPLINTBOLZEN / BULON CILINDRICO
2	3903269M1	1			**1**	CLEVIS PIN	AXE / PERNO D'ATTACCO	SPLINTBOLZEN / BULON CILINDRICO
3	390734X1	1			**2**	WASHER METRIC	RONDELLE METR. / RONDELLA METRICO	SCHEIBE METRISCH / ARANDELA METRICO
4	339246X1	1			**2**	BOLT METRIC	BOULON METRIQUE / BULLONE METRICO	MASCH.SCHRB MET / PERNO METRICO
5		1	▰	REF. NO 1	**1**	HEAD	TETE / TESTA	KOPF / CULATA
6	3902979M91	1			**1**	CLEVIS PIN	AXE / PERNO D'ATTACCO	SPLINTBOLZEN / BULON CILINDRICO
7	3902978M91	1			**1**	CAM	CAME / CAMMA	NOCKEN / LEVA
8	3902977M91	1			**1**	LEVER	LEVIER / LEVA	HEBEL / PALANCA
9	3902981M91	1	Ⓓ		**1**	CLEVIS PIN	AXE / PERNO D'ATTACCO	SPLINTBOLZEN / BULON CILINDRICO
			∅	37MM				
9	3903267M91	1	∅	32MM	**1**	CLEVIS PIN	AXE / PERNO D'ATTACCO	SPLINTBOLZEN / BULON CILINDRICO
10	3902976M91	1			**1**	CLEVIS PIN	AXE / PERNO D'ATTACCO	SPLINTBOLZEN / BULON CILINDRICO
11	3902975M91	1			**1**	LEVER	LEVIER / LEVA	HEBEL / PALANCA
12	3107940M92				**1**	LINKAGE	ARTICULATION / TIRANTERIA	GESTAENGE / VARILLAJE
13	3107941M91		Ⓓ		**2**	KIT, ROD	JEU TIGES / KIT ASTA	SATZ STANGEN / JUEGO DE BIELAS
13	3903394M91				**2**	KIT, ROD	JEU TIGES / KIT ASTA	SATZ STANGEN / JUEGO DE BIELAS
14	3105953M91				**1**	KIT, BRAKE	JEU FREIN / KIT FRENO	BREMSENSATZ / FRENOS JUEGO
15	3902983M91		Ⓓ		**1**	SLEEVE	MANCHON / MANICOTTO	HUELSE / MANCHA
15	3903264M91				**1**	SLEEVE	MANCHON / MANICOTTO	HUELSE / MANCHA
16	395520X1	15			**1**	CIRCLIP	SEGMENT D ARRET / ANELLO D'ARRESTO	SICHERUNGSRING / CIRCULITO
17	3902980M91		Ⓓ		**1**	SLEEVE	MANCHON / MANICOTTO	HUELSE / MANCHA
17	3903266M91				**1**	SLEEVE	MANCHON / MANICOTTO	HUELSE / MANCHA

Hitch
Crochet D'Attelage
Anhaengekupplung
Attacco
Enganche

40-100

Cramer
Cramer
Cramer
Cramer
Cramer

1-ZQ18-004-A

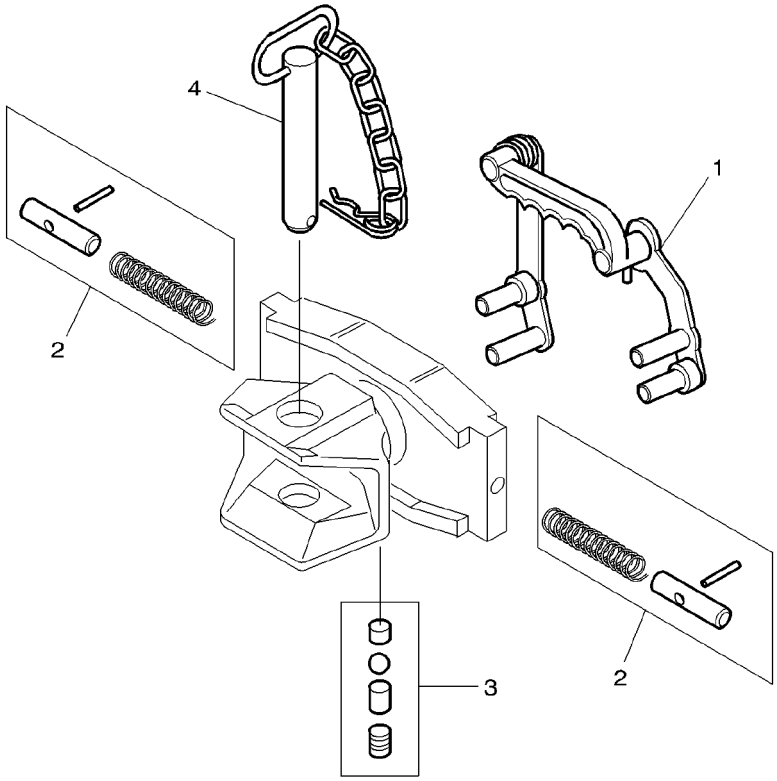

1	3107940M92	**1**	LINKAGE	ARTICULATION TIRANTERIA
2	3107941M91	**2**	KIT, ROD	JEU TIGES KIT ASTA
3	3105953M91	**1**	KIT, BRAKE	JEU FREIN KIT FRENO
4	3902984M91	**1**	PIN HITCH	BROCHE PERNO ATTACCO

GESTAENGE		
VARILLAJE		
SATZ STANGEN		
JUEGO DE BIELAS		
BREMSENSATZ		
FRENOS JUEGO		
KUPPLUNGSBOLZEN		
PASADOR ENGAN.		

Linkage	Swinging Drawbar
Attelage	Barre Oscillante
Lenker	Zugpendel
Tiranteria	Barra Trazione Orientabile
Enganches	Barra De Tiro Oscillante

40-105

1-ZQ12-003-A

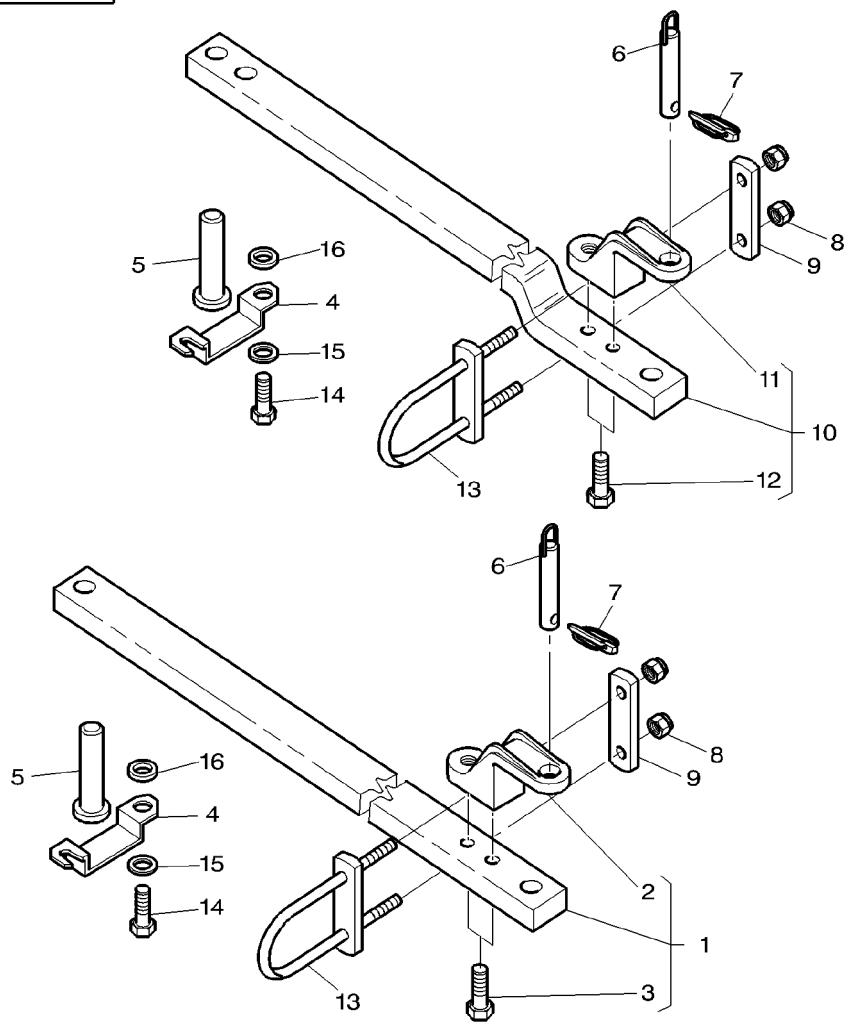

1	3716969M92		ISO
2	3790470M1		1
3	1442668X1	1	M20X70
4	3790751M91		
4	3791831M91		[A]
5	3790750M4	◀▶	115MM
5	3791833M2		[A] ◀▶ 105MM
6	3790349M91		
7	3382826M1		
8	1442739X1	(US)	
9	3790094M1	(US)	
10	3716970M92		SAE
11	3790470M1	10	
12	1442668X1	10	M20X70MM
13	3790474M2	(US)	
14	3009492X1		M10X25MM
15	385362X1		
16	3790749M1		

[A] WITH CLEVIS QUICK ADJUSTMENT
AVEC CHAPE A REGLAGE RAPIDE
MIT GABELSTUECK SCHNELLEINSTELLUNG
CON GANCIO D'ATTACCO AGGIUSTATORE RAPIDO
CON DISPOSITIVO DE SOSTEN A AJUSTE RAPIDO

1	BAR	BARRE	STAB
		BARRA	BARRA
1	CLEVIS	CHAPE	GABELSTUECK
		GANCIO D'ATTACCO	GANCHO SEGURI.
2	SCREW	VIS	SCHRAUBE
		VITE	TORNILLO
1	LOCKING PLATE	PLAQUE BLOCAGE	SICH.BLECH
		PIASTRA DI FERMO	PLACA DE BLOCAJE
1	PLATE	PLAQUE	PLATTE
		PIASTRA	PLATO
1	PIN HITCH	BROCHE	KUPPLUNGSBOLZEN
		PERNO ATTACCO	PASADOR ENGAN.
1	PIN HITCH	BROCHE	KUPPLUNGSBOLZEN
		PERNO ATTACCO	PASADOR ENGAN.
1	PIN HITCH	BROCHE	KUPPLUNGSBOLZEN
		PERNO ATTACCO	PASADOR ENGAN.
1	PIN	GOUPILLE	BOLZEN
		PERNO	PASADOR
2	LOCKNUT	ECROU BLOCAGE	FLACHMUTTER
		AUTOBLOCCANTE	CONTRATUERCA
1	COUNTERPLATE	CONTRE PLAQUE	GEGENPLATTE
		CONTROPIASTRA	CONTRAPLACA
1	BAR	BARRE	STAB
		BARRA	BARRA
1	CLEVIS	CHAPE	GABELSTUECK
		GANCIO D'ATTACCO	GANCHO SEGURI.
2	SCREW	VIS	SCHRAUBE
		VITE	TORNILLO
1	SHACKLE	MANILLE	SCHAEKEL
		ANELLO TRAZIONE	TRABA
2	SCREW METRIC	VIS METRIQUE	SCHRAUBE METR
		VITE METRICA	TORNILLO METRICO
2	WASHER METRIC	RONDELLE METR.	SCHEIBE METRISCH
		RONDELLA METRICO	ARANDELA METRICO
1	BUSH	BAGUE	BUCHSE
		BOCCOLA	CASQUILLO

Linkage **Attelage** **Lenker** **Tiranteria** **Enganches**	**Swinging Drawbar** **Barre Oscillante** **Zugpendel** **Barra Trazione Orientabile** **Barra De Tiro Oscillante**	**40-110**	**Sae Standard** **Norme Sae** **Sae Normung** **Unificazione Sae** **Normalizacion Sae**

1-ZQ12-004-A

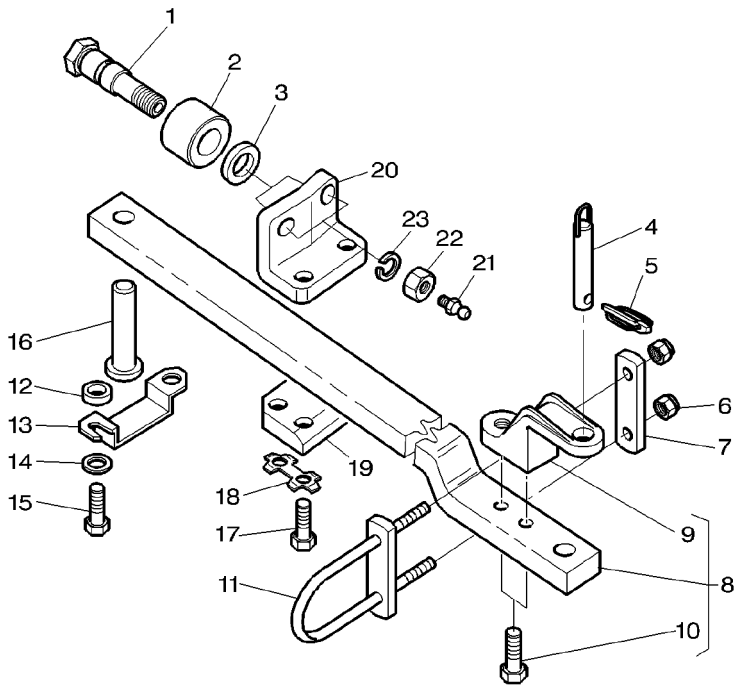

1	3791469M1		
2	3581980M1		
3	3791823M1		
4	3790349M91	∅ 30 MM	
5	3382826M1		
6	1442739X1	US	
7	3790094M1	US	
8	3716970M92		
9	3790470M1	8	
10	1442668X1	8 M20x70	
11	3790474M2	US	
12	3790749M1		
13	3790751M91		
14	385362X1	∅ M10	
15	3009492X1	M10x25	
16	3790750M4		
17	3010045X1	M20x90	
18	3790457M1		
19	3791470M1		
20	3791474M1		
21	364461X1		
22	375102X1		
23	353443X1		

2	CLEVIS PIN	AXE PERNO D'ATTACCO	SPLINTBOLZEN BULON CILINDRICO
2	ROLL	ROULEAU FRANGIZOLLE	WALZE RULO
2	WASHER	RONDELLE RONDELLA	UNTERLEGSCHEIBE ARANDELA
1	PIN HITCH	BROCHE PERNO ATTACCO	KUPPLUNGSBOLZEN PASADOR ENGAN.
1	PIN	GOUPILLE PERNO	BOLZEN PASADOR
2	LOCKNUT	ECROU BLOCAGE AUTOBLOCCANTE	FLACHMUTTER CONTRATUERCA
1	COUNTERPLATE	CONTRE PLAQUE CONTROPIASTRA	GEGENPLATTE CONTRAPLACA
1	BAR	BARRE BARRA	STAB BARRA
1	CLEVIS	CHAPE GANCIO D'ATTACCO	GABELSTUECK GANCHO SEGURI.
2	SCREW	VIS VITE	SCHRAUBE TORNILLO
1	SHACKLE	MANILLE ANELLO TRAZIONE	SCHAEKEL TRABA
1	BUSH	BAGUE BOCCOLA	BUCHSE CASQUILLO
1	LOCKING PLATE	PLAQUE BLOCAGE PIASTRA DI FERMO	SICH.BLECH PLACA DE BLOCAJE
2	WASHER METRIC	RONDELLE METR. RONDELLA METRICO	SCHEIBE METRISCH ARANDELA METRICO
2	SCREW METRIC	VIS METRIQUE VITE METRICA	SCHRAUBE METR TORNILLO METRICO
1	PIN HITCH	BROCHE PERNO ATTACCO	KUPPLUNGSBOLZEN PASADOR ENGAN.
4	SCREW	VIS VITE	SCHRAUBE TORNILLO
2	TONGUE	LANGUETTE LINGUETTA	ZUNGE LENGUETA
1	COUNTERPLATE	CONTRE PLAQUE CONTROPIASTRA	GEGENPLATTE CONTRAPLACA
1	ANGLE	EQUERRE ANGOLO	WINKEL ANGULO
2	GREASE NIPPLE	GRAISSEUR DROIT INGRASSAT.	FETT-NIPPEL ENGRASADOR
2	NUT UNC	ECROU UNC DADO UNC	MUTTER UNC TUERCA UNC
2	WASHER	RONDELLE RONDELLA	UNTERLEGSCHEIBE ARANDELA

Linkage **Attelage** **Lenker** **Tiranteria** **Enganches**	**Swinging Drawbar** **Barre Oscillante** **Zugpendel** **Barra Trazione Orientabile** **Barra De Tiro Oscillante**	**40-115**	**Iso Standard** **Norme Iso** **Iso Normung** **Unificazione Iso** **Normalizacion Iso**

1-ZQ12-014-A

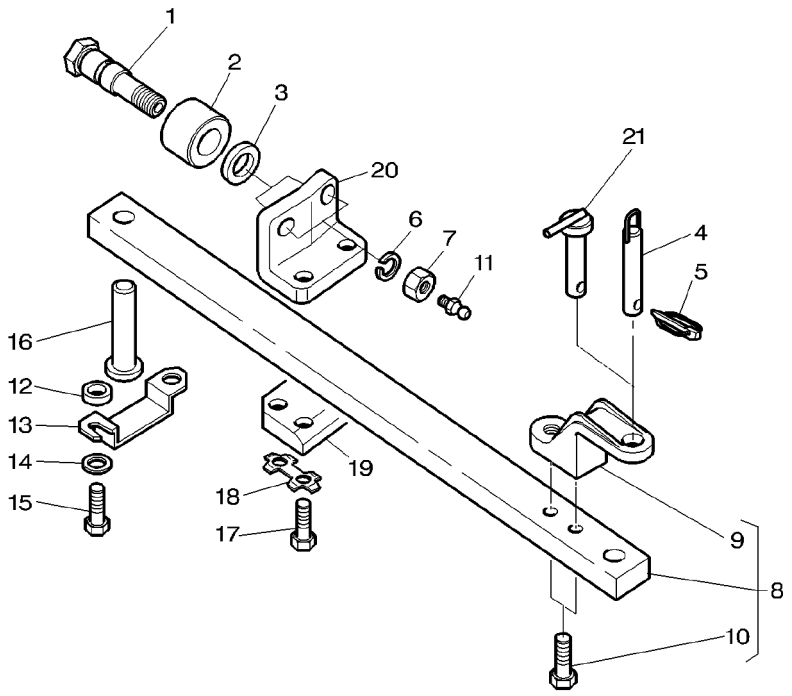

1	3791469M1		**2**	CLEVIS PIN	AXE PERNO D'ATTACCO	SPLINTBOLZEN BULON CILINDRICO
2	3581980M1		**2**	ROLL	ROULEAU FRANGIZOLLE	WALZE RULO
3	3791823M1		**2**	WASHER	RONDELLE RONDELLA	UNTERLEGSCHEIBE ARANDELA
4	3790349M91		**1**	PIN HITCH	BROCHE PERNO ATTACCO	KUPPLUNGSBOLZEN PASADOR ENGAN.
5	3382826M1		**1**	PIN	GOUPILLE PERNO	BOLZEN PASADOR
6	353443X1		**2**	WASHER	RONDELLE RONDELLA	UNTERLEGSCHEIBE ARANDELA
7	375102X1		**2**	NUT UNC	ECROU UNC DADO UNC	MUTTER UNC TUERCA UNC
8	3716969M92		**1**	BAR	BARRE BARRA	STAB BARRA
9	3790470M1	8	**1**	CLEVIS	CHAPE GANCIO D'ATTACCO	GABELSTUECK GANCHO SEGURI.
10	1442668X1	8 M20x70	**2**	SCREW	VIS VITE	SCHRAUBE TORNILLO
11	364461X1		**2**	GREASE NIPPLE	GRAISSEUR DROIT INGRASSAT.	FETT-NIPPEL ENGRASADOR
12	3790749M1		**1**	BUSH	BAGUE BOCCOLA	BUCHSE CASQUILLO
13	3790751M91		**1**	LOCKING PLATE	PLAQUE BLOCAGE PIASTRA DI FERMO	SICH.BLECH PLACA DE BLOCAJE
14	385362X1	∅ M10	**2**	WASHER METRIC	RONDELLE METR. RONDELLA METRICO	SCHEIBE METRISCH ARANDELA METRICO
15	3009492X1	M10x25	**2**	SCREW METRIC	VIS METRIQUE VITE METRICA	SCHRAUBE METR TORNILLO METRICO
16	3790750M4		**1**	PIN HITCH	BROCHE PERNO ATTACCO	KUPPLUNGSBOLZEN PASADOR ENGAN.
17	3010045X1	M20x90	**4**	SCREW	VIS VITE	SCHRAUBE TORNILLO
18	3790457M1		**2**	TONGUE	LANGUETTE LINGUETTA	ZUNGE LENGUETA
19	3791470M1		**1**	COUNTERPLATE	CONTRE PLAQUE CONTROPIASTRA	GEGENPLATTE CONTRAPLACA
20	3791474M1		**1**	ANGLE	EQUERRE ANGOLO	WINKEL ANGULO
21	***3793419M2***		**1**	PIN HITCH	BROCHE PERNO ATTACCO	KUPPLUNGSBOLZEN PASADOR ENGAN.

Linkage **Attelage** **Lenker** **Tiranteria** **Enganches**	**Swinging Drawbar** **Barre Oscillante** **Zugpendel** **Barra Trazione Orientabile** **Barra De Tiro Oscillante**	**40-120**	**Sae Standard** **Norme Sae** **Sae Normung** **Unificazione Sae** **Normalizacion Sae**

1-ZQ12-005-A

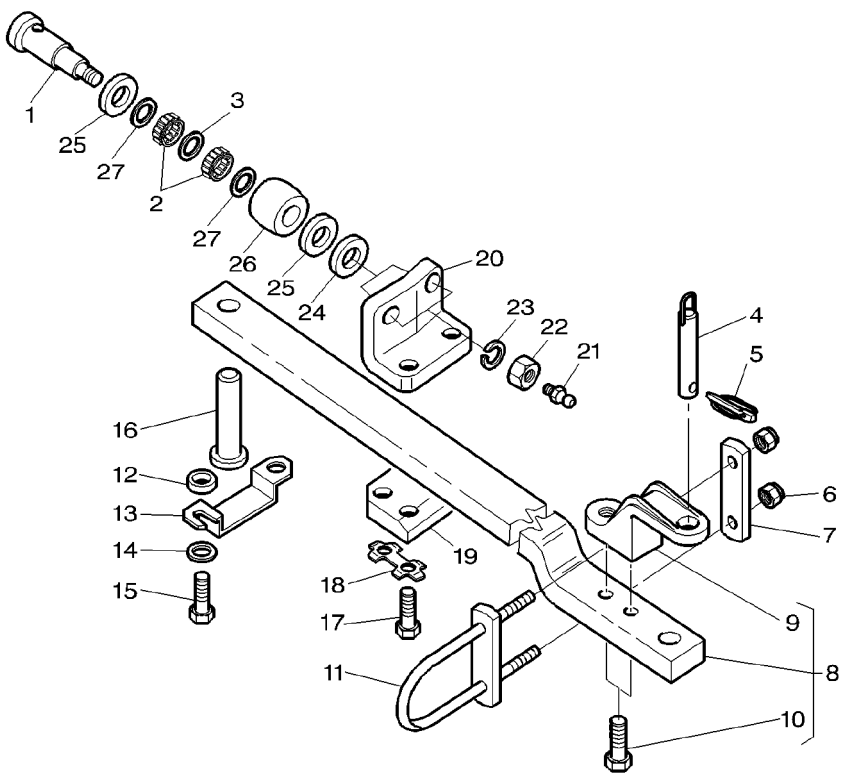

1	3791858M1			**2**	ROLL AXLE	AXE DE GALET ALBERO ROTAZIONE	ROLLENACHSE EJE RODILLO
2	**833083M1**			**4**	BEARING NEEDLE	ROULEMENT AIGUIL CUSCINETTO AGHI	NADELLAGER COJINETA AGUJAS
3	1618225M1			**2**	SPACER	ENTRETOISE DISTANZIALE	ABSTANDSTUECK PIEZA DISTANCIA
4	3790349M91	∅	30 MM	**1**	PIN HITCH	BROCHE PERNO ATTACCO	KUPPLUNGSBOLZEN PASADOR ENGAN.
5	3382826M1			**1**	PIN	GOUPILLE PERNO	BOLZEN PASADOR
6	1442739X1	US		**2**	LOCKNUT	ECROU BLOCAGE AUTOBLOCCANTE	FLACHMUTTER CONTRATUERCA
7	3790094M1	US		**1**	COUNTERPLATE	CONTRE PLAQUE CONTROPIASTRA	GEGENPLATTE CONTRAPLACA
8	3716970M92			**1**	BAR	BARRE BARRA	STAB BARRA
9	3790470M1	8		**1**	CLEVIS	CHAPE GANCIO D'ATTACCO	GABELSTUECK GANCHO SEGURI.
10	1442668X1	8	M20x70	**2**	SCREW	VIS VITE	SCHRAUBE TORNILLO
11	3790474M2	US		**1**	SHACKLE	MANILLE ANELLO TRAZIONE	SCHAEKEL TRABA
12	3790749M1			**1**	BUSH	BAGUE BOCCOLA	BUCHSE CASQUILLO
13	3790751M91			**1**	LOCKING PLATE	PLAQUE BLOCAGE PIASTRA DI FERMO	SICH.BLECH PLACA DE BLOCAJE
14	385362X1	∅	M10	**2**	WASHER METRIC	RONDELLE METR. RONDELLA METRICO	SCHEIBE METRISCH ARANDELA METRICO
15	3009492X1		M10x25	**2**	SCREW METRIC	VIS METRIQUE VITE METRICA	SCHRAUBE METR TORNILLO METRICO
16	3790750M4			**1**	PIN HITCH	BROCHE PERNO ATTACCO	KUPPLUNGSBOLZEN PASADOR ENGAN.
17	3010045X1		M20x90	**4**	SCREW	VIS VITE	SCHRAUBE TORNILLO
18	3790457M1			**2**	TONGUE	LANGUETTE LINGUETTA	ZUNGE LENGUETA
19	3791470M1			**1**	COUNTERPLATE	CONTRE PLAQUE CONTROPIASTRA	GEGENPLATTE CONTRAPLACA
20	3791545M1			**1**	ANGLE	EQUERRE ANGOLO	WINKEL ANGULO
21	364461X1			**2**	GREASE NIPPLE	GRAISSEUR DROIT INGRASSAT.	FETT-NIPPEL ENGRASADOR
22	375102X1			**2**	NUT UNC	ECROU UNC DADO UNC	MUTTER UNC TUERCA UNC
23	353443X1			**2**	WASHER	RONDELLE RONDELLA	UNTERLEGSCHEIBE ARANDELA
24	3791823M1			**2**	WASHER	RONDELLE RONDELLA	UNTERLEGSCHEIBE ARANDELA
25	1618290M1			**4**	WASHER	RONDELLE RONDELLA	UNTERLEGSCHEIBE ARANDELA
26	1618190M1			**2**	ROLLER	GALET RULLO	ROLLE RODILLO

Linkage **Attelage** **Lenker** **Tiranteria** **Enganches**	**Swinging Drawbar** **Barre Oscillante** **Zugpendel** **Barra Trazione Orientabile** **Barra De Tiro Oscillante**	**40-120**	**Sae Standard** **Norme Sae** **Sae Normung** **Unificazione Sae** **Normalizacion Sae**

1-ZQ12-005-A

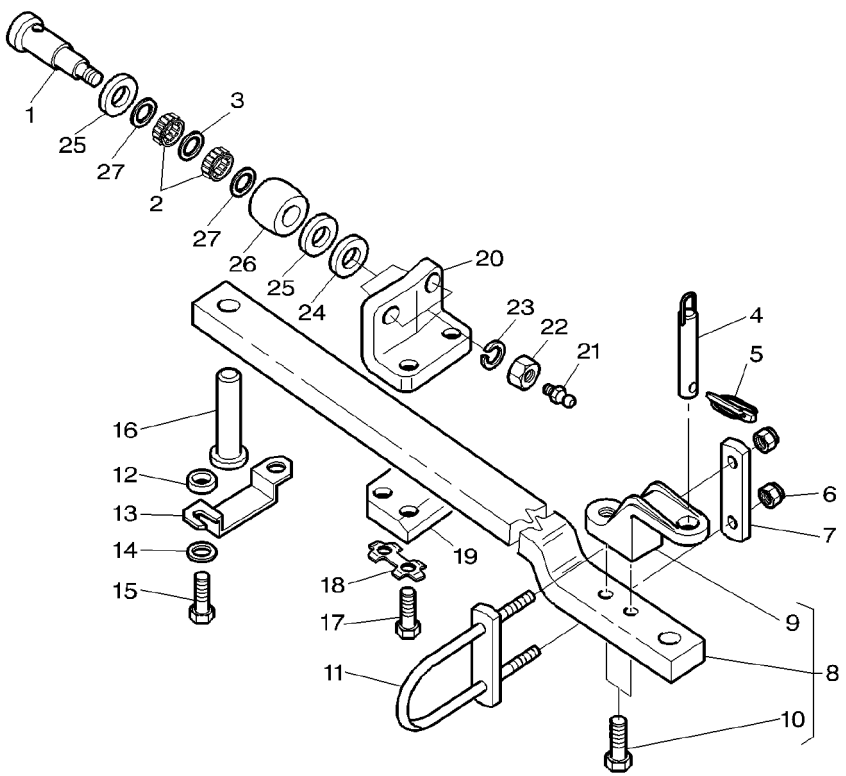

27	831225M1	**4**	SEAL	JOINT ETANCHEITE PARAOLIO	DICHTRING RETEN

Linkage **Attelage** **Lenker** **Tiranteria** **Enganches**	**Swinging Drawbar** **Barre Oscillante** **Zugpendel** **Barra Trazione Orientabile** **Barra De Tiro Oscillante**	**40-125**	**Iso Standard** **Norme Iso** **Iso Normung** **Unificazione Iso** **Normalizacion Iso**

1-ZQ12-002-B

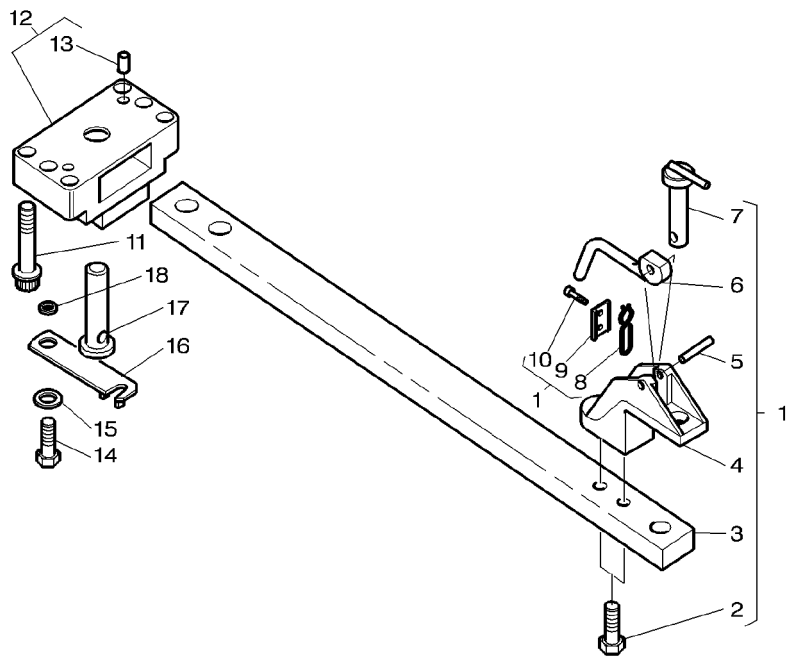

1	3716631M94		
2	1442668X1	1	M20X80
3		1	REF.1
4	3716619M3	1	
5	3010553X1	1	
6	3791643M1	1	
7	***3716103M2***	1	
8	3716622M1	1	
9	3716621M2	1	
10	339560X1	1	
11	3010557X1		M20X100
12	3793161M11		
13	3716624M1	12	⇒ 3716623M3
14	3009492X1		M10X25
15	385362X1		
16	3716306M91		
17	3716121M1		
18	3790749M1		

1	BAR	BARRE BARRA	STAB BARRA
2	SCREW	VIS VITE	SCHRAUBE TORNILLO
1	BAR	BARRE BARRA	STAB BARRA
1	CLEVIS	CHAPE GANCIO D'ATTACCO	GABELSTUECK GANCHO SEGURI.
1	PIN	GOUPILLE PERNO	BOLZEN PASADOR
1	LEVER	LEVIER LEVA	HEBEL PALANCA
1	PIN HITCH	BROCHE PERNO ATTACCO	KUPPLUNGSBOLZEN PASADOR ENGAN.
1	THRUSTER	ARRETOIR SPINGITORE	DRUCKRING PROPULSOR
1	PLATE	PLAQUE PIASTRA	PLATTE PLATO
2	SCREW METRIC	VIS METRIQUE VITE METRICA	SCHRAUBE METR TORNILLO METRICO
6	SCREW METRIC	VIS METRIQUE VITE METRICA	SCHRAUBE METR TORNILLO METRICO
1	BEARING CARRIER	PALIER CUSCINETTO SUPP-PION	LAGER-GEHAEUSE TEJUELO
2	CENTRALISER	CENTRALIZZATORE	FUEHRUNGSKORB CENTRALIZADOR
2	SCREW METRIC	VIS METRIQUE VITE METRICA	SCHRAUBE METR TORNILLO METRICO
2	WASHER METRIC	RONDELLE METR. RONDELLA METRICO	SCHEIBE METRISCH ARANDELA METRICO
1	PLATE	PLAQUE PIASTRA	PLATTE PLATO
1	CLEVIS PIN	AXE PERNO D'ATTACCO	SPLINTBOLZEN BULON CILINDRICO
1	BUSH	BAGUE BOCCOLA	BUCHSE CASQUILLO

Linkage **Attelage** **Lenker** **Tiranteria** **Enganches**	**Swinging Drawbar** **Barre Oscillante** **Zugpendel** **Barra Trazione Orientabile** **Barra De Tiro Oscillante**	**40-130**

With Trailed Implememt Control
Avec Controle Outils Traines
Mit Angehaentes Geraet Bedienung
Con Controllo Attrezzo Trainato
Con Control Apero Remolcado

1-ZQ12-009-A

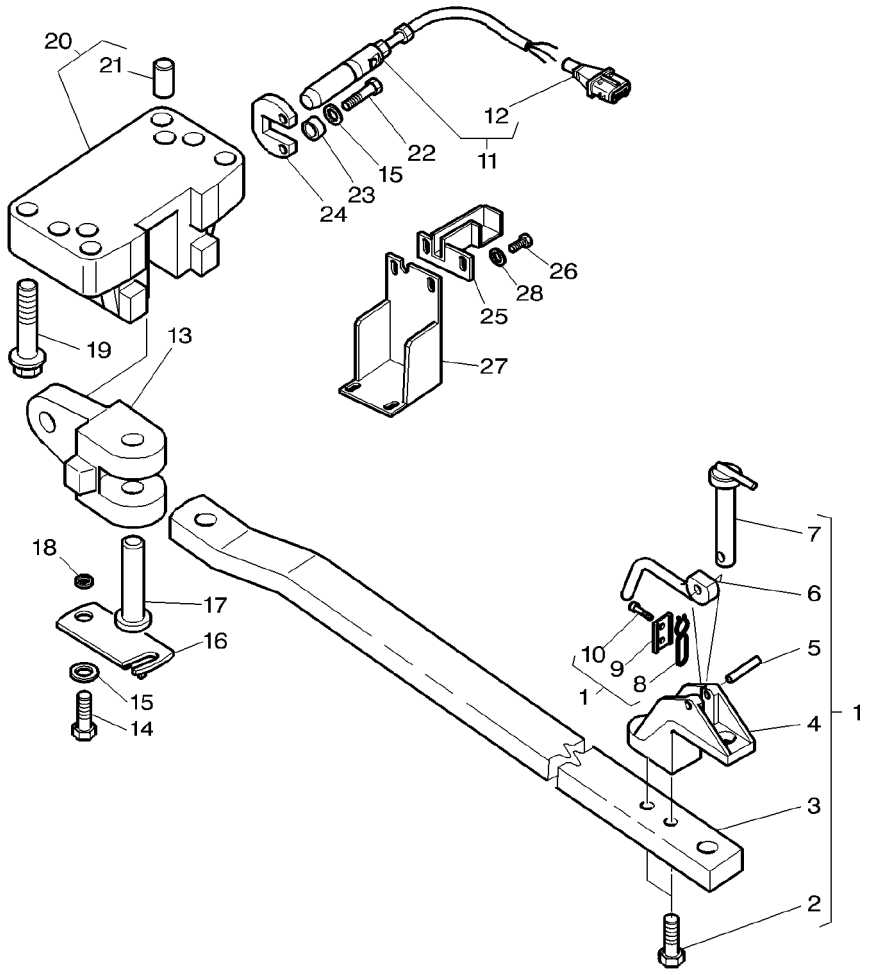

1	3792397M93		**1**	BAR	BARRE BARRA	STAB BARRA
2	1442668X1	1 M20X80	**2**	SCREW	VIS VITE	SCHRAUBE TORNILLO
3		1 ⇨ REF.1	**1**	BAR	BARRE BARRA	STAB BARRA
4	3716619M3	1	**1**	CLEVIS	CHAPE GANCIO D'ATTACCO	GABELSTUECK GANCHO SEGURI.
5	3010553X1	1	**1**	PIN	GOUPILLE PERNO	BOLZEN PASADOR
6	3791643M1	1	**1**	LEVER	LEVIER LEVA	HEBEL PALANCA
7	***3716103M2***	1	**1**	PIN HITCH	BROCHE PERNO ATTACCO	KUPPLUNGSBOLZEN PASADOR ENGAN.
8	3716622M1	1	**1**	THRUSTER	ARRETOIR SPINGITORE	DRUCKRING PROPULSOR
9	3716621M2	1	**1**	PLATE	PLAQUE PIASTRA	PLATTE PLATO
10	339560X1	1	**2**	SCREW METRIC	VIS METRIQUE VITE METRICA	SCHRAUBE METR TORNILLO METRICO
11	3792432M1		**1**	SWITCH,INDIRECT	CONTACTEUR INTERRUTTORE IND	KONTAKTSCHALTER CONTACTOR
12	3385534M1	11	**1**	CONNECTORS	CONNECTEUR MORSETTI	K.VERBINDER CONECTADORES
13	3790933M1		**1**	CLEVIS	CHAPE GANCIO D'ATTACCO	GABELSTUECK GANCHO SEGURI.
14	3009492X1	M10X25	**2**	SCREW METRIC	VIS METRIQUE VITE METRICA	SCHRAUBE METR TORNILLO METRICO
15	385362X1		**4**	WASHER METRIC	RONDELLE METR. RONDELLA METRICO	SCHEIBE METRISCH ARANDELA METRICO
16	3790936M91		**1**	LOCKING PLATE	PLAQUE BLOCAGE PIASTRA DI FERMO	SICH.BLECH PLACA DE BLOCAJE
17	3790937M1		**1**	CLEVIS PIN	AXE PERNO D'ATTACCO	SPLINTBOLZEN BULON CILINDRICO
18	3790749M1		**1**	BUSH	BAGUE BOCCOLA	BUCHSE CASQUILLO
19	3010557X1	M20X100	**5**	SCREW METRIC	VIS METRIQUE VITE METRICA	SCHRAUBE METR TORNILLO METRICO
19	3010561X1	M20X50	**1**	SCREW	VIS VITE	SCHRAUBE TORNILLO
20	3793160M11	⇨ 3790932M1	**1**	BEARING CARRIER	PALIER CUSCINETTO SUPP- PION CENTRALIZZATORE	LAGER-GEHAEUSE TEJUELO FUEHRUNGSKORB CENTRALIZADOR
21	3716624M1	20	**2**	CENTRALISER		
22	3001429X1	M10X35	**2**	SCREW	VIS VITE	SCHRAUBE TORNILLO
23	3384183M1		**2**	BUSH	BAGUE BOCCOLA	BUCHSE CASQUILLO
24	3716499M1		**1**	PLATE	PLAQUE PIASTRA	PLATTE PLATO
25	3792577M1		**1**	COWL	GARANT CAPPOTTATURA	AUFSATZ CAPERUZA

Linkage **Attelage** **Lenker** **Tiranteria** **Enganches**	**Swinging Drawbar** **Barre Oscillante** **Zugpendel** **Barra Trazione Orientabile** **Barra De Tiro Oscilante**	**40-130**	**With Trailed Implememt Control** **Avec Controle Outils Traines** **Mit Angehaentes Geraet Bedienung** **Con Controllo Attrezzo Trainato** **Con Control Apero Remolcado**

1-ZQ12-009-A

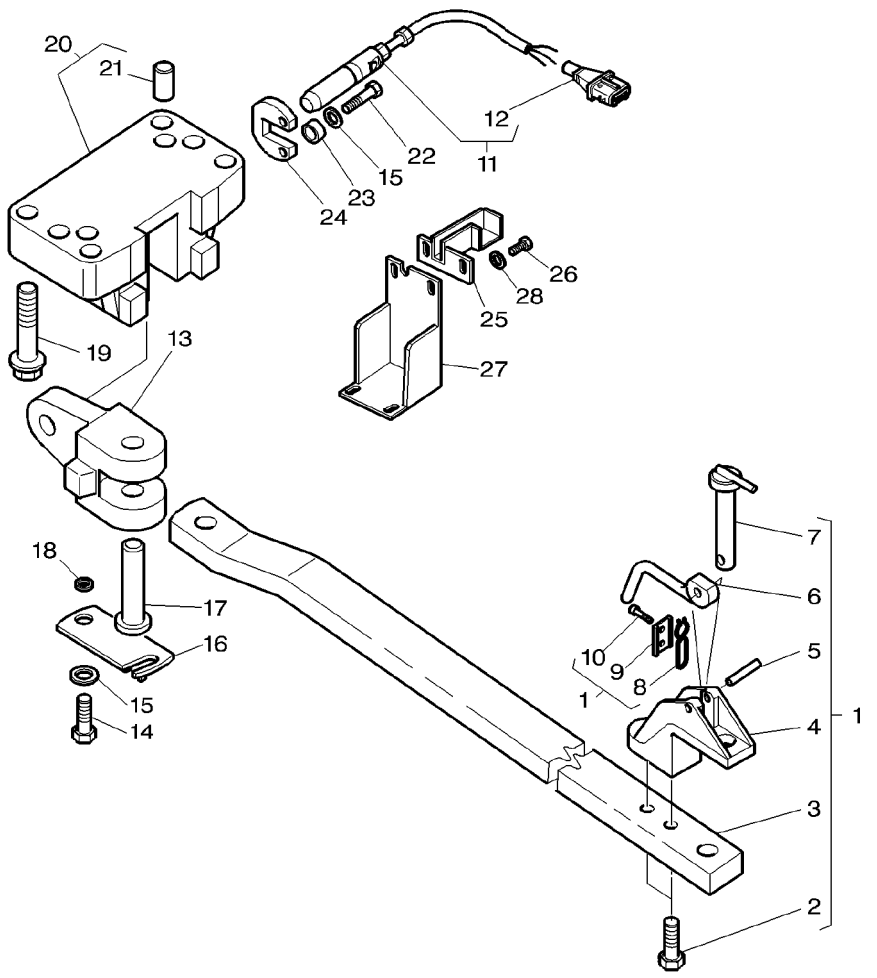

26	339560X1	M6X16	**4**	SCREW METRIC	VIS METRIQUE VITE METRICA	SCHRAUBE METR TORNILLO METRICO
27	3790940M1		**1**	COWL	GARANT CAPPOTTATURA	AUFSATZ CAPERUZA
28	390971X1		**4**	WASHER METRIC	RONDELLE METR. RONDELLA METRICO	SCHEIBE METRISCH ARANDELA METRICO

Linkage **Attelage** **Lenker** **Tiranteria** **Enganches**	**Swinging Drawbar** **Barre Oscillante** **Zugpendel** **Barra Trazione Orientabile** **Barra De Tiro Oscillante**	**40-135**

With Trailed Implememt Control
Avec Controle Outils Traines
Mit Angehaentes Geraet Bedienung
Con Controllo Attrezzo Trainato
Con Control Apero Remolcado

1-ZQ12-010-A

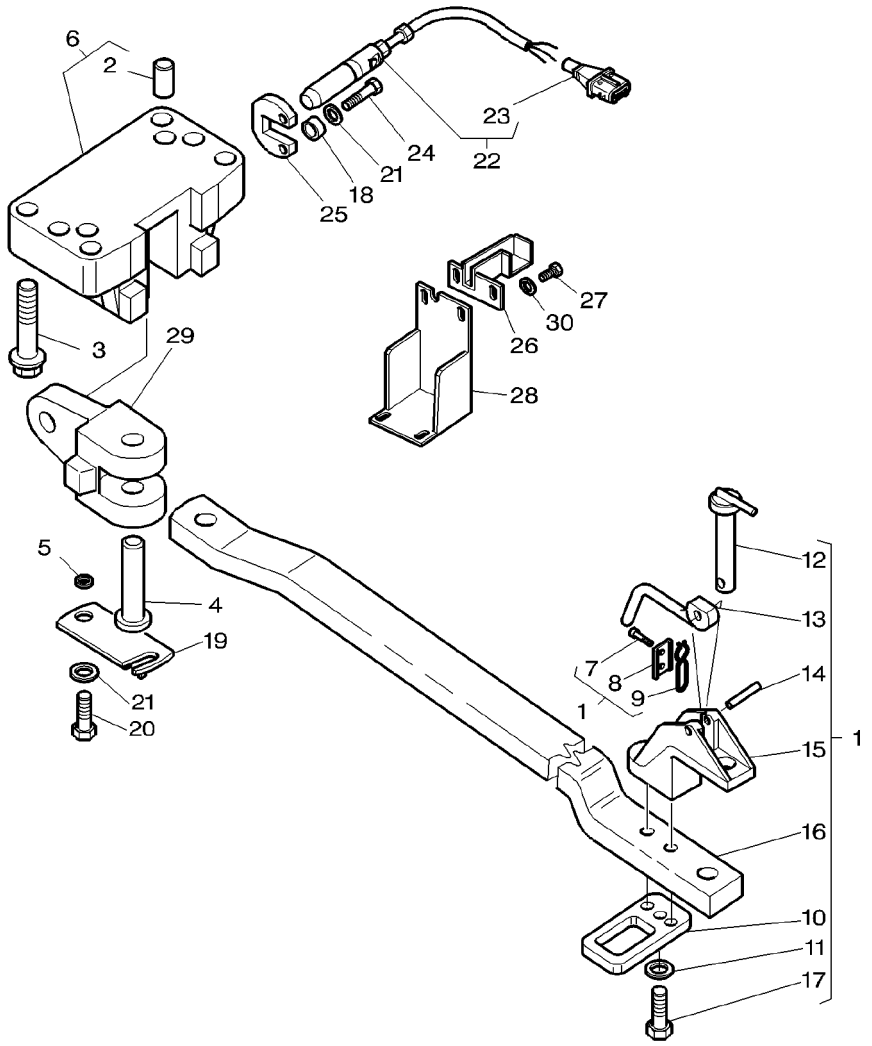

1	3792398M92			**1**	BAR	BARRE BARRA	STAB BARRA
2	3716624M1	6		**2**	CENTRALISER	PION CENTRALIZZATORE	FUEHRUNGSKORB CENTRALIZADOR
3	3010557X1	M20X100		**5**	SCREW METRIC	VIS METRIQUE VITE METRICA	SCHRAUBE METR TORNILLO METRICO
3	3010561X1	M20X50		**1**	SCREW	VIS VITE	SCHRAUBE TORNILLO
4	3790937M1			**1**	CLEVIS PIN	AXE PERNO D'ATTACCO	SPLINTBOLZEN BULON CILINDRICO
5	3790749M1			**1**	BUSH	BAGUE BOCCOLA	BUCHSE CASQUILLO
6	3793160M11	⇒ 3790932M1		**1**	BEARING CARRIER	PALIER CUSCINETTO SUPP-	LAGER-GEHAEUSE TEJUELO
7	339560X1	1		**2**	SCREW METRIC	VIS METRIQUE VITE METRICA	SCHRAUBE METR TORNILLO METRICO
8	3716621M2	1		**1**	PLATE	PLAQUE PIASTRA	PLATTE PLATO
9	3716622M1	1		**1**	THRUSTER	ARRETOIR SPINGITORE	DRUCKRING PROPULSOR
10	3793421M1	1		**1**	SHACKLE	MANILLE ANELLO TRAZIONE	SCHAEKEL TRABA
11	385365X1	1		**2**	WASHER	RONDELLE RONDELLA	UNTERLEGSCHEIBE ARANDELA
12	***3716103M2***	1		**1**	PIN HITCH	BROCHE PERNO ATTACCO	KUPPLUNGSBOLZEN PASADOR ENGAN.
13	3791643M1	1		**1**	LEVER	LEVIER LEVA	HEBEL PALANCA
14	3010553X1	1		**1**	PIN	GOUPILLE PERNO	BOLZEN PASADOR
15	3716619M3	1		**1**	CLEVIS	CHAPE GANCIO D'ATTACCO	GABELSTUECK GANCHO SEGURI.
16		1 ■ REF. NO 1		**1**	BAR	BARRE BARRA	STAB BARRA
17	3010945X1	1	M20X105	**2**	SCREW	VIS VITE	SCHRAUBE TORNILLO
18	3384183M1			**2**	BUSH	BAGUE BOCCOLA	BUCHSE CASQUILLO
19	3790936M91			**1**	LOCKING PLATE	PLAQUE BLOCAGE PIASTRA DI FERMO	SICH.BLECH PLACA DE BLOCAJE
20	3009492X1		M10X25	**2**	SCREW METRIC	VIS METRIQUE VITE METRICA	SCHRAUBE METR TORNILLO METRICO
21	385362X1			**2**	WASHER METRIC	RONDELLE METR. RONDELLA METRICO	SCHEIBE METRISCH ARANDELA METRICO
22	3792432M1			**1**	SWITCH,INDIRECT	CONTACTEUR INTERRUTTORE IND	KONTAKTSCHALTER CONTACTOR
23	3385534M1	22		**1**	CONNECTORS	CONNECTEUR MORSETTI	K.VERBINDER CONECTADORES
24	3001429X1		M10X35	**2**	SCREW	VIS VITE	SCHRAUBE TORNILLO
25	3716499M1			**1**	PLATE	PLAQUE PIASTRA	PLATTE PLATO

Linkage **Attelage** **Lenker** **Tiranteria** **Enganches**	**Swinging Drawbar** **Barre Oscillante** **Zugpendel** **Barra Trazione Orientabile** **Barra De Tiro Oscillante**	**40-135**	**With Trailed Implememt Control** **Avec Controle Outils Traines** **Mit Angehaentes Geraet Bedienung** **Con Controllo Attrezzo Trainato** **Con Control Apero Remolcado**

1-ZQ12-010-A

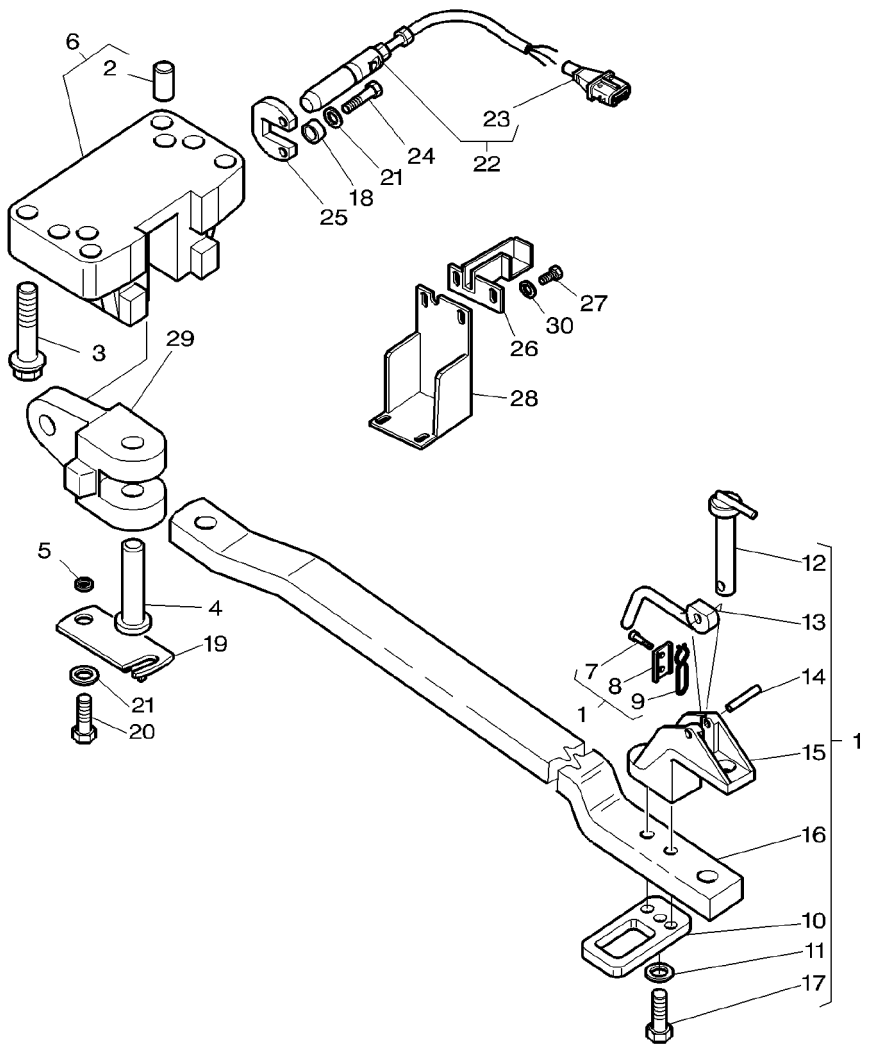

26	3792577M1		**1**	COWL	GARANT CAPPOTTATURA	AUFSATZ CAPERUZA
27	339560X1	M6X16	**4**	SCREW METRIC	VIS METRIQUE VITE METRICA	SCHRAUBE METR TORNILLO METRICO
28	3790940M1		**1**	COWL	GARANT CAPPOTTATURA	AUFSATZ CAPERUZA
29	3790933M1		**1**	CLEVIS	CHAPE GANCIO D'ATTACCO	GABELSTUECK GANCHO SEGURI.
30	390971X1		**4**	WASHER METRIC	RONDELLE METR. RONDELLA METRICO	SCHEIBE METRISCH ARANDELA METRICO

Linkage **Attelage** **Lenker** **Tiranteria** **Enganches**	**Swinging Drawbar** **Barre Oscillante** **Zugpendel** **Barra Trazione Orientabile** **Barra De Tiro Oscilante**	**40-140**	**With Trailed Implememt Control** **Avec Controle Outils Traines** **Mit Angehaentes Geraet Bedienung** **Con Controllo Attrezzo Trainato** **Con Control Apero Remolcado**

1-ZQ12-011-A

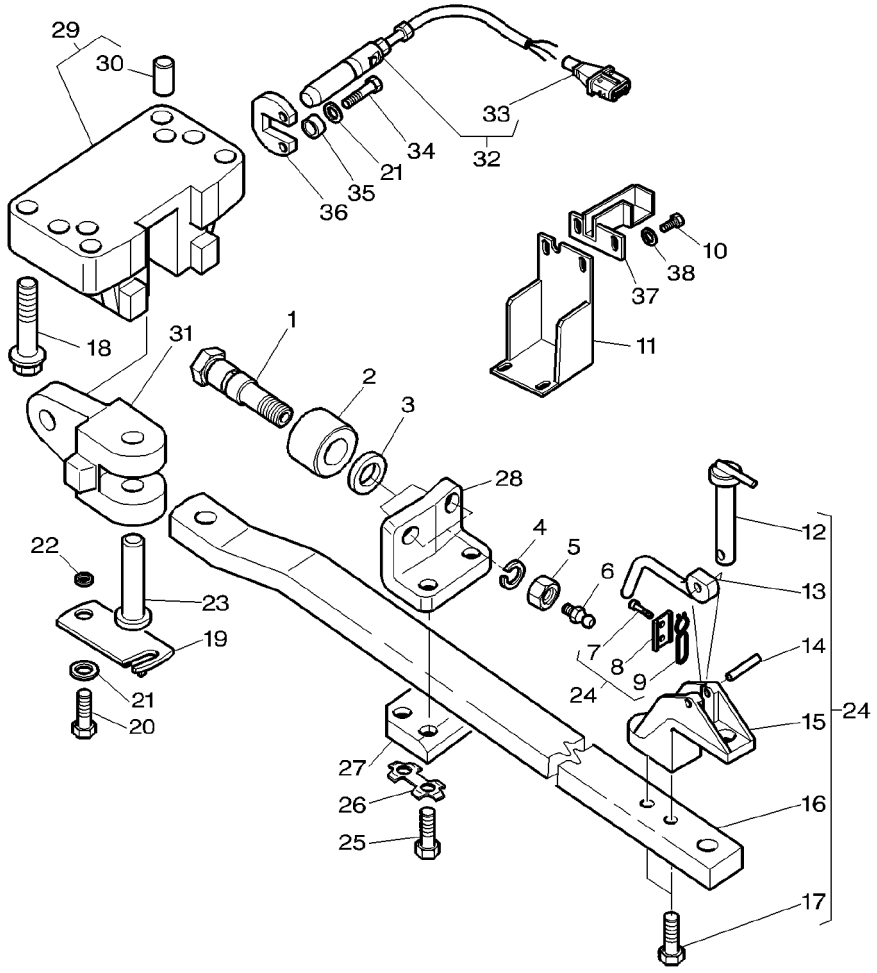

1	3791469M1			**2**	CLEVIS PIN	AXE PERNO D'ATTACCO	SPLINTBOLZEN BULON CILINDRICO
2	3581980M1			**2**	ROLL	ROULEAU FRANGIZOLLE	WALZE RULO
3	3791823M1			**2**	WASHER	RONDELLE RONDELLA	UNTERLEGSCHEIBE ARANDELA
4	353443X1			**2**	WASHER	RONDELLE RONDELLA	UNTERLEGSCHEIBE ARANDELA
5	375102X1			**2**	NUT UNC	ECROU UNC DADO UNC	MUTTER UNC TUERCA UNC
6	364461X1			**2**	GREASE NIPPLE	GRAISSEUR DROIT INGRASSAT.	FETT-NIPPEL ENGRASADOR
7	339560X1	24		**2**	SCREW METRIC	VIS METRIQUE VITE METRICA	SCHRAUBE METR TORNILLO METRICO
8	3716621M2	24		**1**	PLATE	PLAQUE PIASTRA	PLATTE PLATO
9	3716622M1	24		**1**	THRUSTER	ARRETOIR SPINGITORE	DRUCKRING PROPULSOR
10	339560X1		M6X16	**4**	SCREW METRIC	VIS METRIQUE VITE METRICA	SCHRAUBE METR TORNILLO METRICO
11	3790940M1			**1**	COWL	GARANT CAPPOTTATURA	AUFSATZ CAPERUZA
12	***3716103M2***	24		**1**	PIN HITCH	BROCHE PERNO ATTACCO	KUPPLUNGSBOLZEN PASADOR ENGAN.
13	3791643M1	24		**1**	LEVER	LEVIER LEVA	HEBEL PALANCA
14	3010553X1	24		**1**	PIN	GOUPILLE PERNO	BOLZEN PASADOR
15	3716619M3	24		**1**	CLEVIS	CHAPE GANCIO D'ATTACCO	GABELSTUECK GANCHO SEGURI.
16		24	REF. NO 24	**1**	BAR	BARRE BARRA	STAB BARRA
17	1442668X1	24	M20X80	**2**	SCREW	VIS VITE	SCHRAUBE TORNILLO
18	3010557X1		M20X100	**5**	SCREW METRIC	VIS METRIQUE VITE METRICA	SCHRAUBE METR TORNILLO METRICO
18	3010561X1		M20X50	**1**	SCREW	VIS VITE	SCHRAUBE TORNILLO
19	3790936M91			**1**	LOCKING PLATE	PLAQUE BLOCAGE PIASTRA DI FERMO	SICH.BLECH PLACA DE BLOCAJE
20	3009492X1		M10X25	**2**	SCREW METRIC	VIS METRIQUE VITE METRICA	SCHRAUBE METR TORNILLO METRICO
21	385362X1			**4**	WASHER METRIC	RONDELLE METR. RONDELLA METRICO	SCHEIBE METRISCH ARANDELA METRICO
22	3790749M1			**1**	BUSH	BAGUE BOCCOLA	BUCHSE CASQUILLO
23	3790937M1			**1**	CLEVIS PIN	AXE PERNO D'ATTACCO	SPLINTBOLZEN BULON CILINDRICO
24	3792397M93			**1**	BAR	BARRE BARRA	STAB BARRA
25	391332X1		M20X100	**4**	SCREW	VIS VITE	SCHRAUBE TORNILLO

Linkage **Attelage** **Lenker** **Tiranteria** **Enganches**	**Swinging Drawbar** **Barre Oscillante** **Zugpendel** **Barra Trazione Orientabile** **Barra De Tiro Oscilante**	**40-140**	**With Trailed Implememt Control** **Avec Controle Outils Traines** **Mit Angehaentes Geraet Bedienung** **Con Controllo Attrezzo Trainato** **Con Control Apero Remolcado**

1-ZQ12-011-A

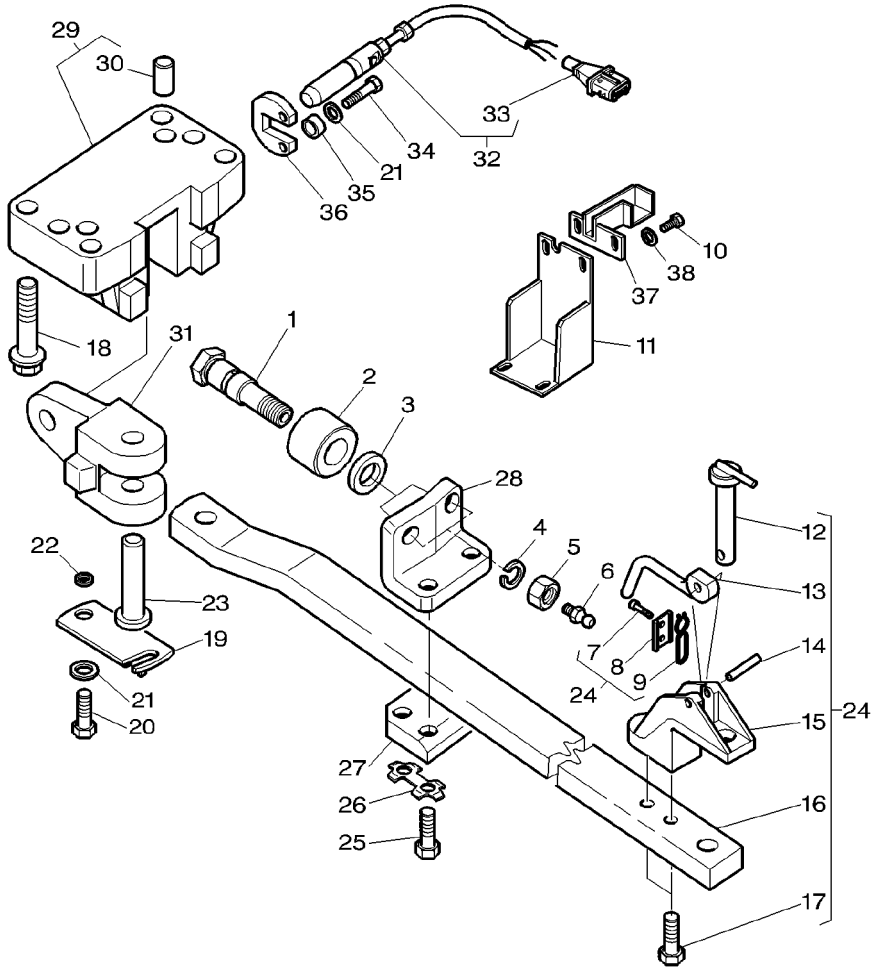

26	3790457M1			**2**	TONGUE	LANGUETTE LINGUETTA	ZUNGE LENGUETA
27	3791470M1			**1**	COUNTERPLATE	CONTRE PLAQUE CONTROPIASTRA	GEGENPLATTE CONTRAPLACA
28	3791467M1			**1**	ANGLE	EQUERRE ANGOLO	WINKEL ANGULO
29	3793160M11	⇒	3790932M1	**1**	BEARING CARRIER	PALIER CUSCINETTO SUPP-	LAGER-GEHAEUSE TEJUELO
30	3716624M1	29		**2**	CENTRALISER	PION CENTRALIZZATORE	FUEHRUNGSKORB CENTRALIZADOR
31	3790933M1			**1**	CLEVIS	CHAPE GANCIO D'ATTACCO	GABELSTUECK GANCHO SEGURI.
32	3792432M1			**1**	SWITCH,INDIRECT	CONTACTEUR INTERRUTTORE IND	KONTAKTSCHALTER CONTACTOR
33	3385534M1	32		**1**	CONNECTORS	CONNECTEUR MORSETTI	K.VERBINDER CONECTADORES
34	3001429X1		M10X35	**2**	SCREW	VIS VITE	SCHRAUBE TORNILLO
35	3384183M1			**2**	BUSH	BAGUE BOCCOLA	BUCHSE CASQUILLO
36	3716499M1			**1**	PLATE	PLAQUE PIASTRA	PLATTE PLATO
37	3792577M1			**1**	COWL	GARANT CAPPOTTATURA	AUFSATZ CAPERUZA
38	390971X1			**4**	WASHER METRIC	RONDELLE METR. RONDELLA METRICO	SCHEIBE METRISCH ARANDELA METRICO

Linkage **Attelage** **Lenker** **Tiranteria** **Enganches**	**Swinging Drawbar** **Barre Oscillante** **Zugpendel** **Barra Trazione Orientabile** **Barra De Tiro Oscillante**	**40-145**	**With Trailed Implememt Control** **Avec Controle Outils Traines** **Mit Angehaentes Geraet Bedienung** **Con Controllo Attrezzo Trainato** **Con Control Apero Remolcado**

1-ZQ12-012-A

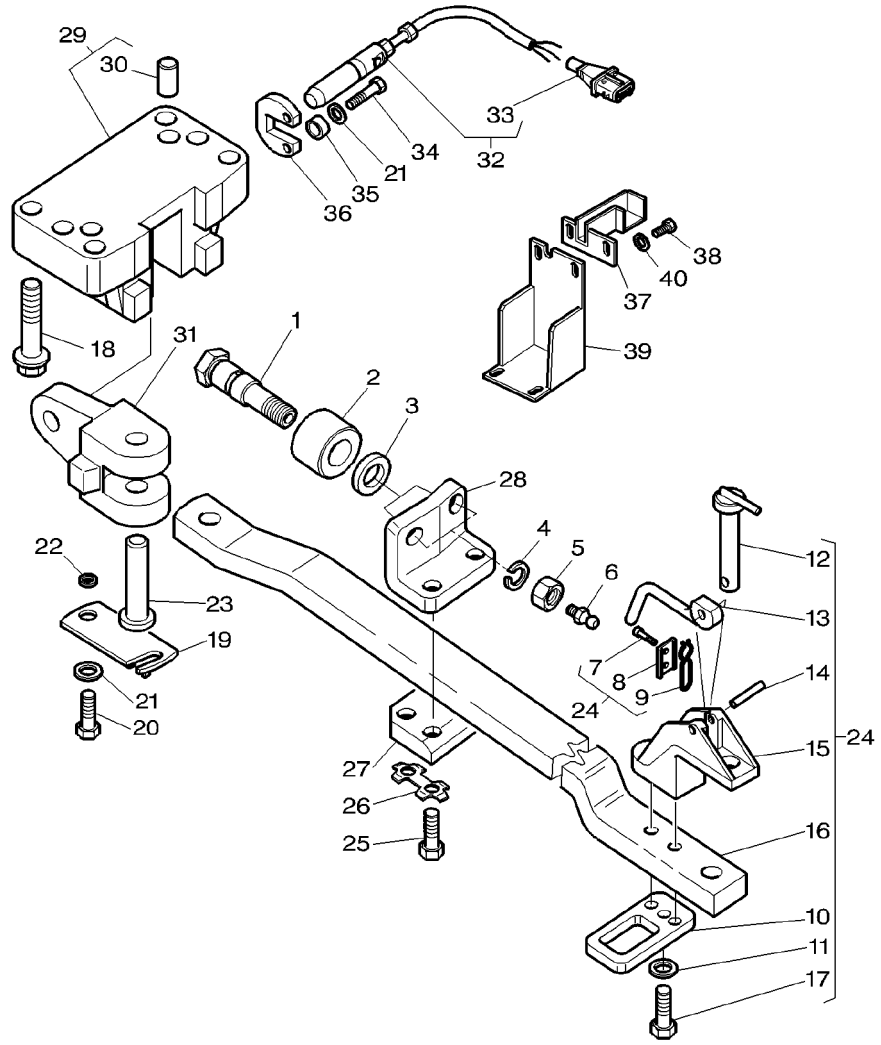

1	3791469M1			**2**	CLEVIS PIN	AXE PERNO D'ATTACCO	SPLINTBOLZEN BULON CILINDRICO
2	3581980M1			**2**	ROLL	ROULEAU FRANGIZOLLE	WALZE RULO
3	3791823M1			**2**	WASHER	RONDELLE RONDELLA	UNTERLEGSCHEIBE ARANDELA
4	353443X1			**2**	WASHER	RONDELLE RONDELLA	UNTERLEGSCHEIBE ARANDELA
5	375102X1			**2**	NUT UNC	ECROU UNC DADO UNC	MUTTER UNC TUERCA UNC
6	364461X1			**2**	GREASE NIPPLE	GRAISSEUR DROIT INGRASSAT.	FETT-NIPPEL ENGRASADOR
7	339560X1	24		**2**	SCREW METRIC	VIS METRIQUE VITE METRICA	SCHRAUBE METR TORNILLO METRICO
8	3716621M2	24		**1**	PLATE	PLAQUE PIASTRA	PLATTE PLATO
9	3716622M1	24		**1**	THRUSTER	ARRETOIR SPINGITORE	DRUCKRING PROPULSOR
10	3793421M1	24	M6X16	**4**	SHACKLE	MANILLE ANELLO TRAZIONE	SCHAEKEL TRABA
11	385365X1	24		**2**	WASHER	RONDELLE RONDELLA	UNTERLEGSCHEIBE ARANDELA
12	***3716103M2***	24		**1**	PIN HITCH	BROCHE PERNO ATTACCO	KUPPLUNGSBOLZEN PASADOR ENGAN.
13	3791643M1	24		**1**	LEVER	LEVIER LEVA	HEBEL PALANCA
14	3010553X1	24		**1**	PIN	GOUPILLE PERNO	BOLZEN PASADOR
15	3716619M3	24		**1**	CLEVIS	CHAPE GANCIO D'ATTACCO	GABELSTUECK GANCHO SEGURI.
16		24	REF. NO 24	**1**	BAR	BARRE BARRA	STAB BARRA
17	3010945X1	24	M20X105	**2**	SCREW	VIS VITE	SCHRAUBE TORNILLO
18	3010557X1		M20X100	**5**	SCREW METRIC	VIS METRIQUE VITE METRICA	SCHRAUBE METR TORNILLO METRICO
18	3010561X1		M20X50	**1**	SCREW	VIS VITE	SCHRAUBE TORNILLO
19	3790936M91			**1**	LOCKING PLATE	PLAQUE BLOCAGE PIASTRA DI FERMO	SICH.BLECH PLACA DE BLOCAJE
20	3009492X1		M10X25	**2**	SCREW METRIC	VIS METRIQUE VITE METRICA	SCHRAUBE METR TORNILLO METRICO
21	385362X1			**4**	WASHER METRIC	RONDELLE METR. RONDELLA METRICO	SCHEIBE METRISCH ARANDELA METRICO
22	3790749M1			**1**	BUSH	BAGUE BOCCOLA	BUCHSE CASQUILLO
23	3790937M1			**1**	CLEVIS PIN	AXE PERNO D'ATTACCO	SPLINTBOLZEN BULON CILINDRICO
24	3792398M92			**1**	BAR	BARRE BARRA	STAB BARRA
25	391332X1		M20X100	**4**	SCREW	VIS VITE	SCHRAUBE TORNILLO

Linkage **Attelage** **Lenker** **Tiranteria** **Enganches**	**Swinging Drawbar** **Barre Oscillante** **Zugpendel** **Barra Trazione Orientabile** **Barra De Tiro Oscillante**	**40-145**	**With Trailed Implememt Control** **Avec Controle Outils Traines** **Mit Angehaentes Geraet Bedienung** **Con Controllo Attrezzo Trainato** **Con Control Apero Remolcado**

1-ZQ12-012-A

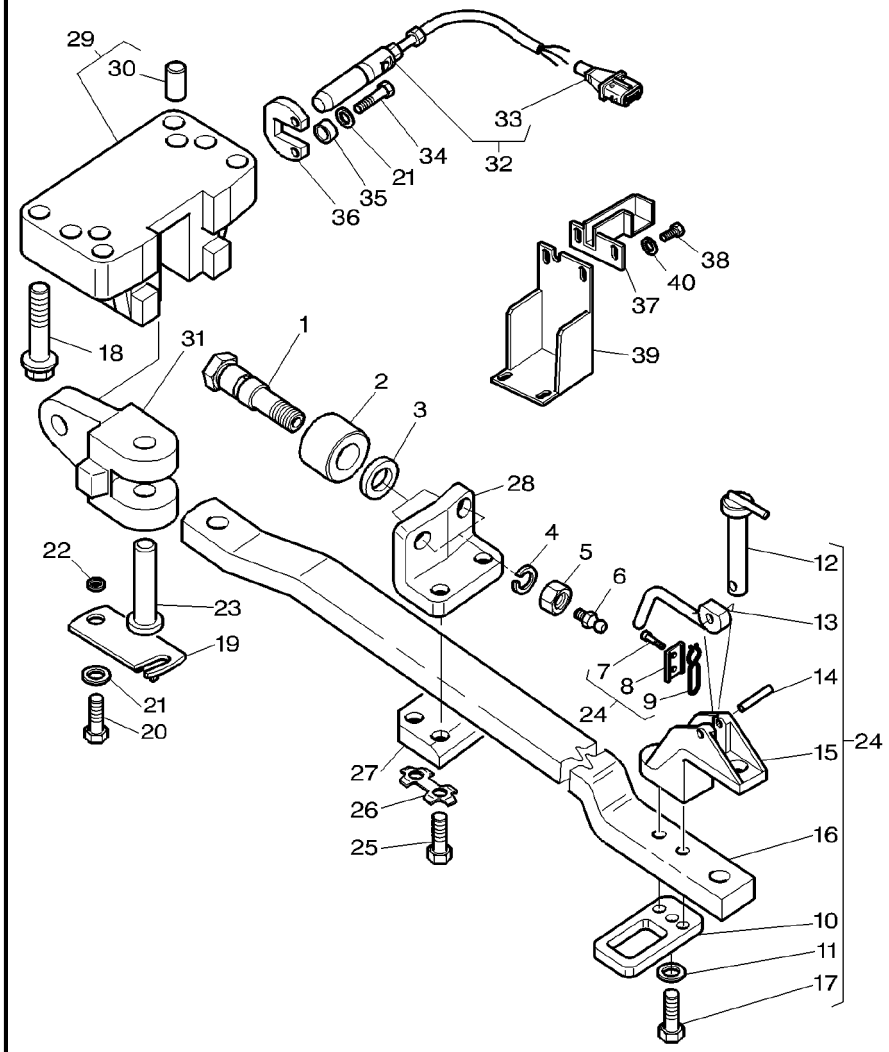

26	3790457M1			**2**	TONGUE	LANGUETTE LINGUETTA	ZUNGE LENGUETA
27	3791470M1			**1**	COUNTERPLATE	CONTRE PLAQUE CONTROPIASTRA	GEGENPLATTE CONTRAPLACA
28	3791467M1			**1**	ANGLE	EQUERRE ANGOLO	WINKEL ANGULO
29	3793160M11	⇒	3790932M1	**1**	BEARING CARRIER	PALIER CUSCINETTO SUPP-	LAGER-GEHAEUSE TEJUELO
30	3716624M1	29		**2**	CENTRALISER	PION CENTRALIZZATORE	FUEHRUNGSKORB CENTRALIZADOR
31	3790933M1			**1**	CLEVIS	CHAPE GANCIO D'ATTACCO	GABELSTUECK GANCHO SEGURI.
32	3792432M1			**1**	SWITCH,INDIRECT	CONTACTEUR INTERRUTTORE IND	KONTAKTSCHALTER CONTACTOR
33	3385534M1	32		**1**	CONNECTORS	CONNECTEUR MORSETTI	K.VERBINDER CONECTADORES
34	3001429X1		M10X35	**2**	SCREW	VIS VITE	SCHRAUBE TORNILLO
35	3384183M1			**2**	BUSH	BAGUE BOCCOLA	BUCHSE CASQUILLO
36	3716499M1			**1**	PLATE	PLAQUE PIASTRA	PLATTE PLATO
37	3792577M1			**1**	COWL	GARANT CAPPOTTATURA	AUFSATZ CAPERUZA
38	339560X1		M6X16	**4**	SCREW METRIC	VIS METRIQUE VITE METRICA	SCHRAUBE METR TORNILLO METRICO
39	3790940M1			**1**	COWL	GARANT CAPPOTTATURA	AUFSATZ CAPERUZA
40	390971X1			**4**	WASHER METRIC	RONDELLE METR. RONDELLA METRICO	SCHEIBE METRISCH ARANDELA METRICO

Tube Stabilizers
Stabilisateurs A Tube
Stabilisatoren
Stabilizzatore Tubo
Estabilizador Tubo

40-150

1-ZQ16-005-B

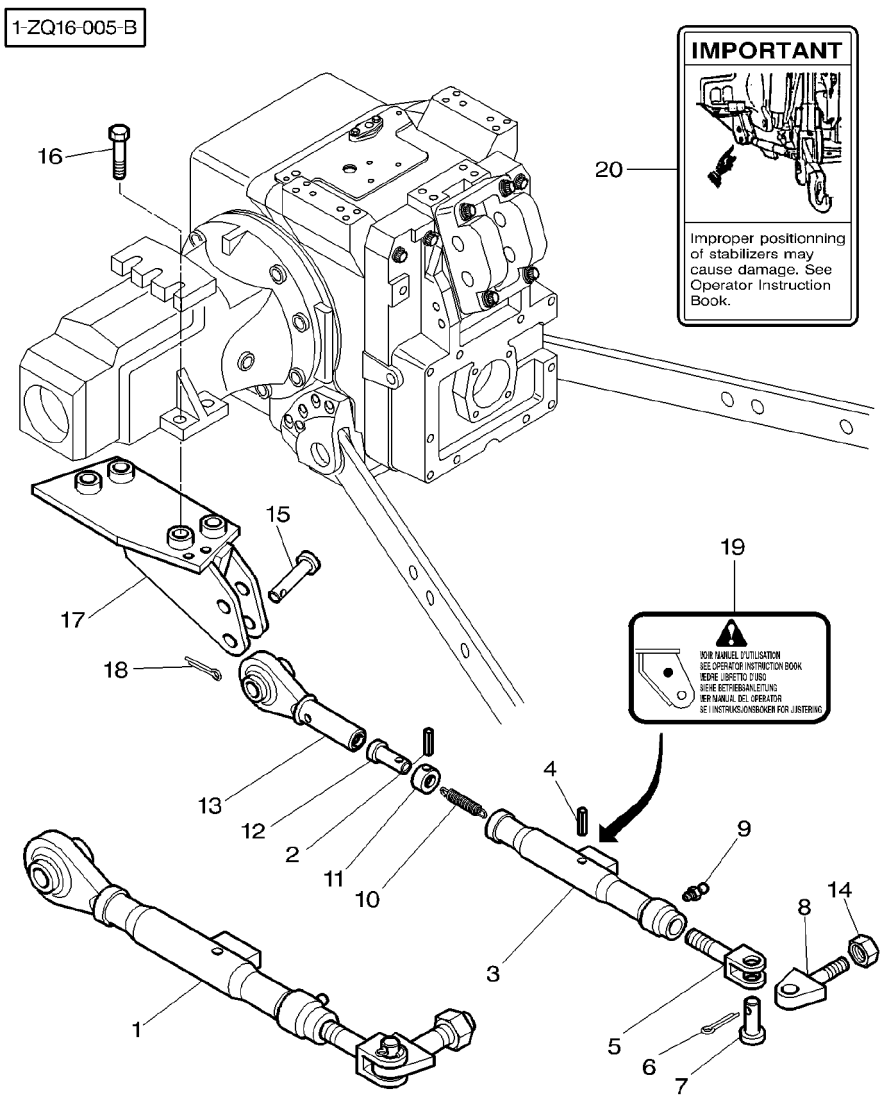

1	3615707M93		28-SEP-2000	**2**	STABILISER	STABILISATEUR STABILIZZATORE	STABILISATOR ESTABILIZADOR
1	3794474M91		29-SEP-2000	**2**	STABILISER	STABILISATEUR STABILIZZATORE	STABILISATOR ESTABILIZADOR
2	391290X1	1		**1**	PIN	GOUPILLE PERNO	BOLZEN PASADOR
3	**3615712M2**	1	28-SEP-2000	**1**	TUBE	TUBE TUBO	ROHR TUBO
3	3794472M91	1	29-SEP-2000	**1**	TUBE	TUBE TUBO	ROHR TUBO
4	3819644M1	1 ∅	8X50	**1**	SPIROL PIN	GOUPILLE SPIRALE SPINA ESPANSIONE	SPIRALSTIFT PASADOR ESPIRAL
5	3790004M1	1		**1**	CLEVIS	CHAPE GANCIO D'ATTACCO	GABELSTUECK GANCHO SEGURI.
6	391371X1	1 ∅	5X40	**1**	PIN	GOUPILLE PERNO	BOLZEN PASADOR
7	3019228X1	1		**1**	CLEVIS PIN	AXE PERNO D'ATTACCO	SPLINTBOLZEN BULON CILINDRICO
8	3790005M1	1 M24		**1**	JOURNAL	TENON ZONA APPOGGIO	LAGERZAPFEN GORRON
9	339608X1	1		**1**	GREASE NIPPLE	GRAISSEUR DROIT INGRASSAT.	FETT-NIPPEL ENGRASADOR
10	3615711M1	1		**1**	SPRING	RESSORT MOLLA	FEDER MUELLE
11	3615709M1	1		**1**	SLEEVE	MANCHON MANICOTTO	HUELSE MANCHA
12	3615710M1	1		**1**	CLEVIS PIN	AXE PERNO D'ATTACCO	SPLINTBOLZEN BULON CILINDRICO
13	3615708M1	1	28-SEP-2000	**1**	TOGGLE	ROTULE ROTULA	GELENKZAPFEN PERNO ENGANCHE
13	3794411M91	1	29-SEP-2000	**1**	TOGGLE	ROTULE ROTULA	GELENKZAPFEN PERNO ENGANCHE
14	3001189X1	1		**1**	NUT	ECROU DADO	MUTTER TUERCA
15	3615647M1			**2**	CLEVIS PIN	AXE PERNO D'ATTACCO	SPLINTBOLZEN BULON CILINDRICO
16	3010556X1	M20X70		**8**	SCREW METRIC	VIS METRIQUE VITE METRICA	SCHRAUBE METR TORNILLO METRICO
17	3716773M2	◀		**1**	SUPPORT	SUPPORT SUPPORTO	LAGERUNG DISPOS.DE SOSTEN
17	3716774M2	▶		**1**	SUPPORT	SUPPORT SUPPORTO	LAGERUNG DISPOS.DE SOSTEN
18	1442492X1	∅	6,3X36MM	**2**	PIN	GOUPILLE PERNO	BOLZEN PASADOR
19	3617574M3	US N		**2**	DECAL	DECALCOMANIE DECALCOMANIA	AUFKLEBER CALCOMANIA
20	3777022M1	US N		**2**	DECAL	DECALCOMANIE DECALCOMANIA	AUFKLEBER CALCOMANIA

Tube Stabilizers
Stabilisateurs A Tube
Stabilisatoren
Stabilizzatore Tubo
Estabilizador Tubo

40-155

1-ZQ16-007-A

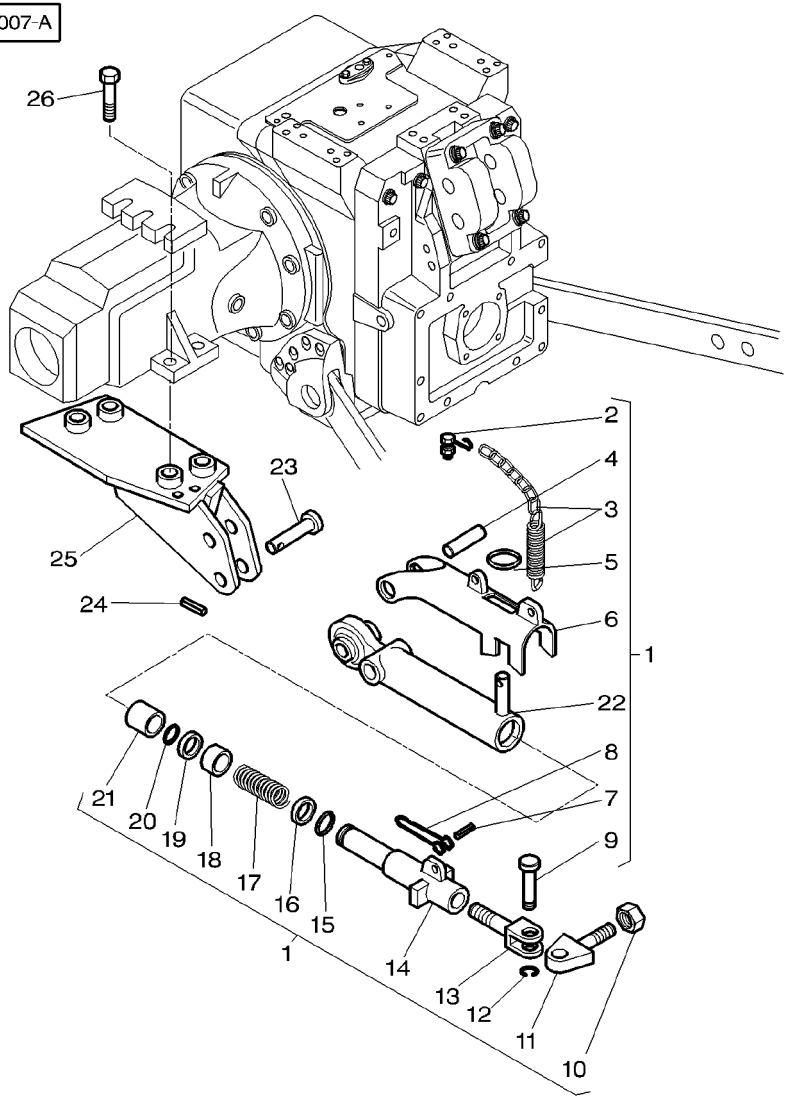

1	3791642M1		2	STABILISER	STABILISATEUR STABILIZZATORE	STABILISATOR ESTABILIZADOR
2	3902906M1	1	1	RETAINER	RETENEUR FERMO	HALTERING RETENEDOR
3	3903191M91	1	1	CHAIN	CHAINE CATENA	KETTE CADENA
4	3902891M1	1	1	PIN	GOUPILLE PERNO	BOLZEN PASADOR
5	3902890M1	1	1	RING	ANNEAU ANELLO	RING ARO
6	3902889M1	1	1	LATCH	VERROU SALISCENDI	RIEGEL CERROJO
7	3000046X1	1	1	PIN	GOUPILLE PERNO	BOLZEN PASADOR
8	3902899M1	1	1	HANDLE	POIGNEE MANIGLIA	HANDGRIFF MANETA
9	3902901M1	1	1	SCREW	VIS VITE	SCHRAUBE TORNILLO
10	3903193M1	1 M24	1	NUT	ECROU DADO	MUTTER TUERCA
11	3903192M1	1	1	STUB	EMBOUT CEPPO	STUMMEL SALIENTE
12	3902902M1	1	1	CLIP	CLIP FERMAGLIO	SCHELLE CRAPA RETEN
13	3902900M1	1	1	CLEVIS	CHAPE GANCIO D'ATTACCO	GABELSTUECK GANCHO SEGURI.
14	3902898M1	1	1	TUBE	TUBE TUBO	ROHR TUBO
15	3902897M1	1	1	CLIP	CLIP FERMAGLIO	SCHELLE CRAPA RETEN
16	3902894M1	1	1	BUSH	BAGUE BOCCOLA	BUCHSE CASQUILLO
17	3902896M1	1	1	SPRING	RESSORT MOLLA	FEDER MUELLE
18	3903190M1	1 42X48X39,5	1	BUSH	BAGUE BOCCOLA	BUCHSE CASQUILLO
19	3902894M1	1	1	BUSH	BAGUE BOCCOLA	BUCHSE CASQUILLO
20	3902893M1	1	1	CLIP	CLIP FERMAGLIO	SCHELLE CRAPA RETEN
21	3902892M1	1 42X48X47,5	1	BUSH	BAGUE BOCCOLA	BUCHSE CASQUILLO
22	3902888M1	1	1	TOGGLE	ROTULE ROTULA	GELENKZAPFEN PERNO ENGANCHE
23	3615647M1		2	CLEVIS PIN	AXE PERNO D'ATTACCO	SPLINTBOLZEN BULON CILINDRICO
24	1442492X1		2	PIN	GOUPILLE PERNO	BOLZEN PASADOR
25	3716773M2	◀	1	SUPPORT	SUPPORT SUPPORTO	LAGERUNG DISPOS.DE SOSTEN
25	3716774M2	▶	1	SUPPORT	SUPPORT SUPPORTO	LAGERUNG DISPOS.DE SOSTEN

Tube Stabilizers
Stabilisateurs A Tube
Stabilisatoren
Stabilizzatore Tubo
Estabilizador Tubo

40-155

1-ZQ16-007-A

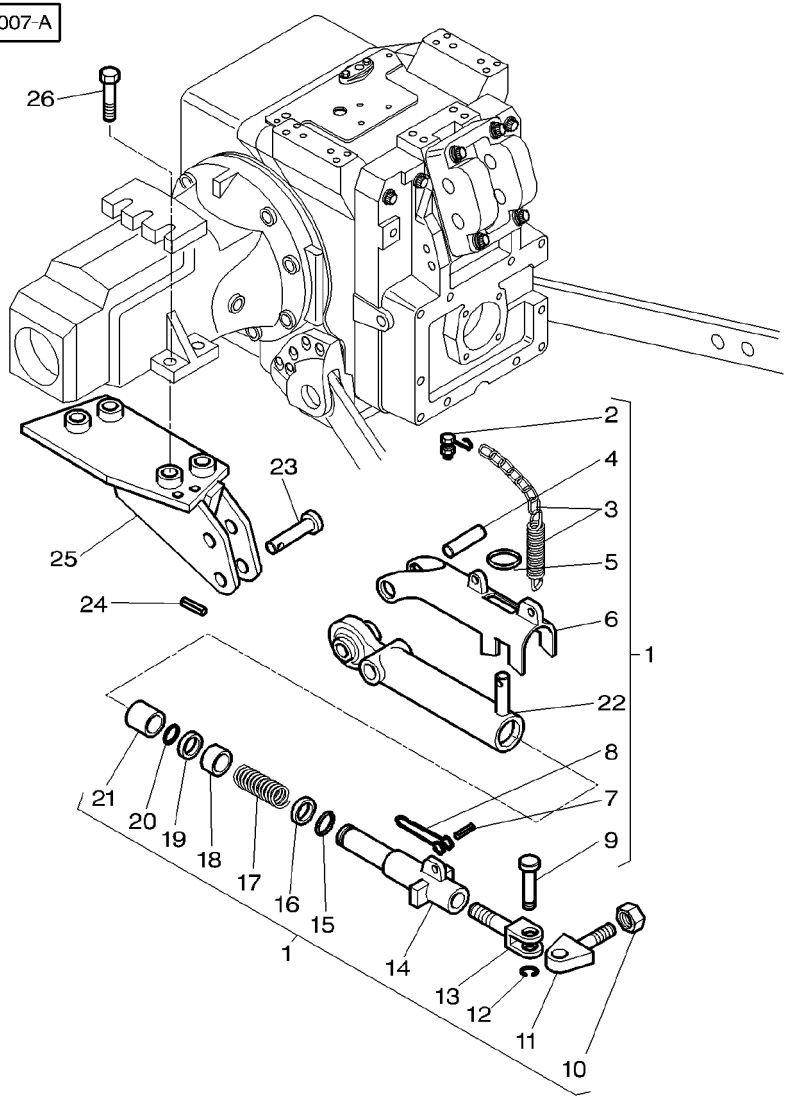

26	3010556X1	M20X70	**8** SCREW METRIC	VIS METRIQUE VITE METRICA	SCHRAUBE METR TORNILLO METRICO

1-ZQ15-001-A

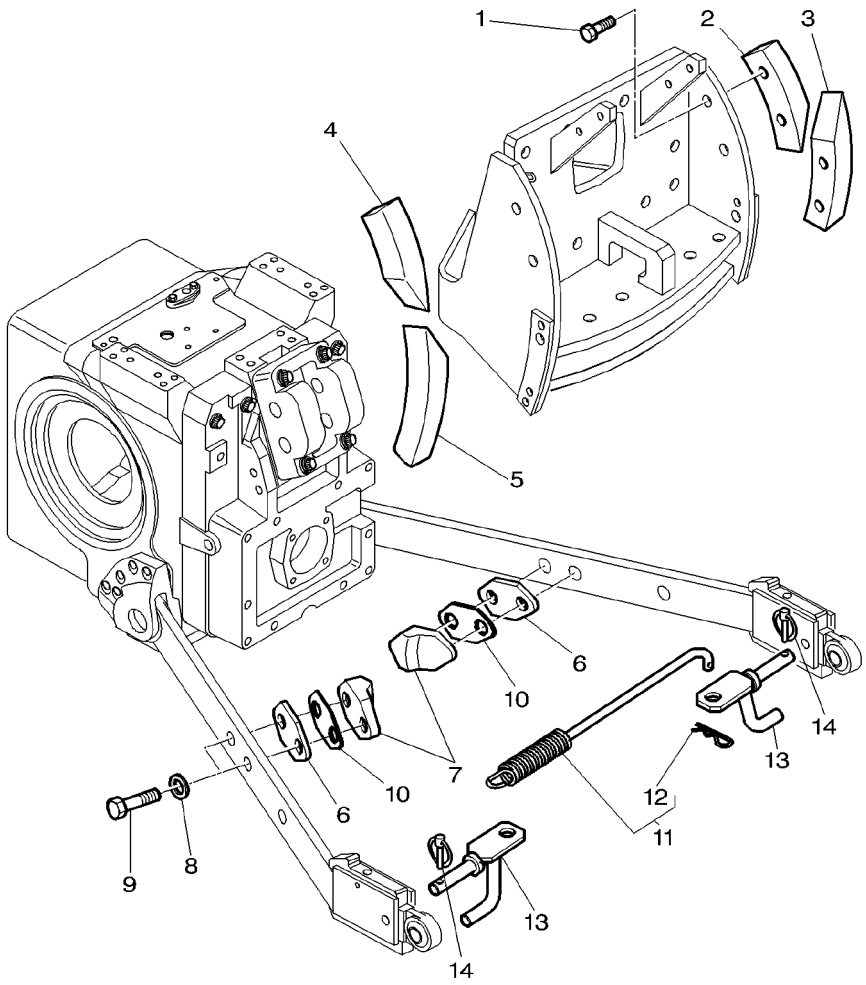

1	391120X1	M16X45MM	
2	3716138M1		
3	3716141M1		
4	3716137M1		
5	3716140M1		
6	3716144M1	⧗	4MM
7	3716143M1		
8	3019575X1		
9	339881X1	M16X60MM	
10	3386369M1	⧗	1,2MM
11	3617118M1		
12	1633899M1	11	
13	3791602M1		
14	3382824M1		

8	SCREW	VIS	SCHRAUBE
		VITE	TORNILLO
1	SHOE	SABOT	SCHUH
		SUOLA	ZAPATA
1	SHOE	SABOT	SCHUH
		SUOLA	ZAPATA
1	SHOE	SABOT	SCHUH
		SUOLA	ZAPATA
1	SHOE	SABOT	SCHUH
		SUOLA	ZAPATA
2	CHOCK	CALE	UNTERLEG-KEIL
		PASSACAVO	CALZA
2	STOP	BUTEE	ANSCHLAG
		STOP	PARO
4	WASHER METRIC	RONDELLE METR.	SCHEIBE METRISCH
		RONDELLA METRICO	ARANDELA METRICO
4	BOLT METRIC	BOULON METRIQUE	MASCH.SCHRB MET
		BULLONE METRICO	PERNO METRICO
2	CHOCK	CALE	UNTERLEG-KEIL
		PASSACAVO	CALZA
1	SPRING	RESSORT	FEDER
		MOLLA	MUELLE
1	PIN	GOUPILLE	BOLZEN
		PERNO	PASADOR
2	SPRING CARRIER	SUPPORT RESSORT	FEDERTRAEGER
		PORTA MOLLA	SOPORTE DE MUELL
2	PIN	GOUPILLE	BOLZEN
		PERNO	PASADOR

Drawbar
Barre A Trous
Ackerschiene
Barra Di Trazione
Barra De Tiro

40-165

1-ZQ14-001-A

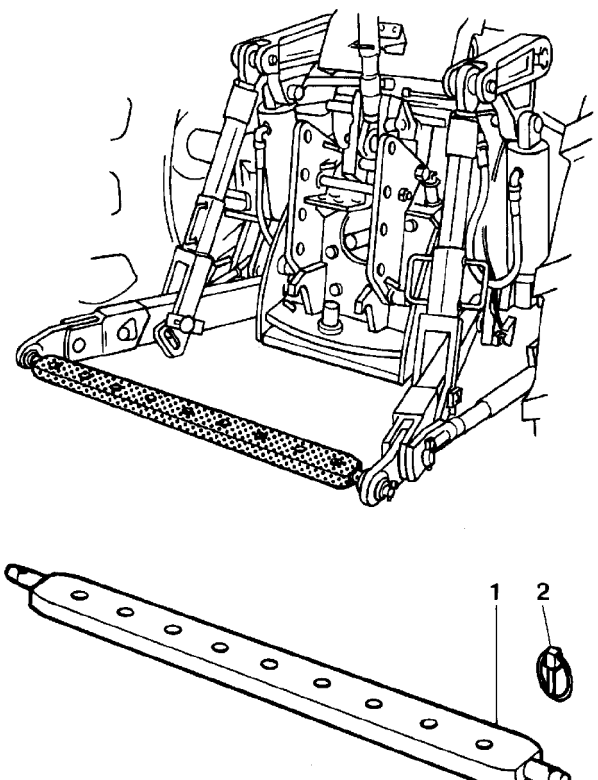

1	**3387153M1**	CAT 2	**1** BAR	BARRE BARRA	STAB BARRA
2	3581687M1		**2** PIN	GOUPILLE PERNO	BOLZEN PASADOR

Automatic Hitch **Crochet Automatique** **Automatische Anhaengekupplung** **Gancio Automatico** **Enganche Automatico**	**With Remote Control** **Avec Commande A Distance** **Mit Fernbedienung** **Con Comando** **Con Control Remoto**	**40-170**

Automatic Hook "Dromone"
Crochet Automatique "Dromone"
Automatish Zughaken "Dromone"
Gancio Automatico "Dromone"
Gancho Automatico "Dromone"

1-ZQ21-003-C

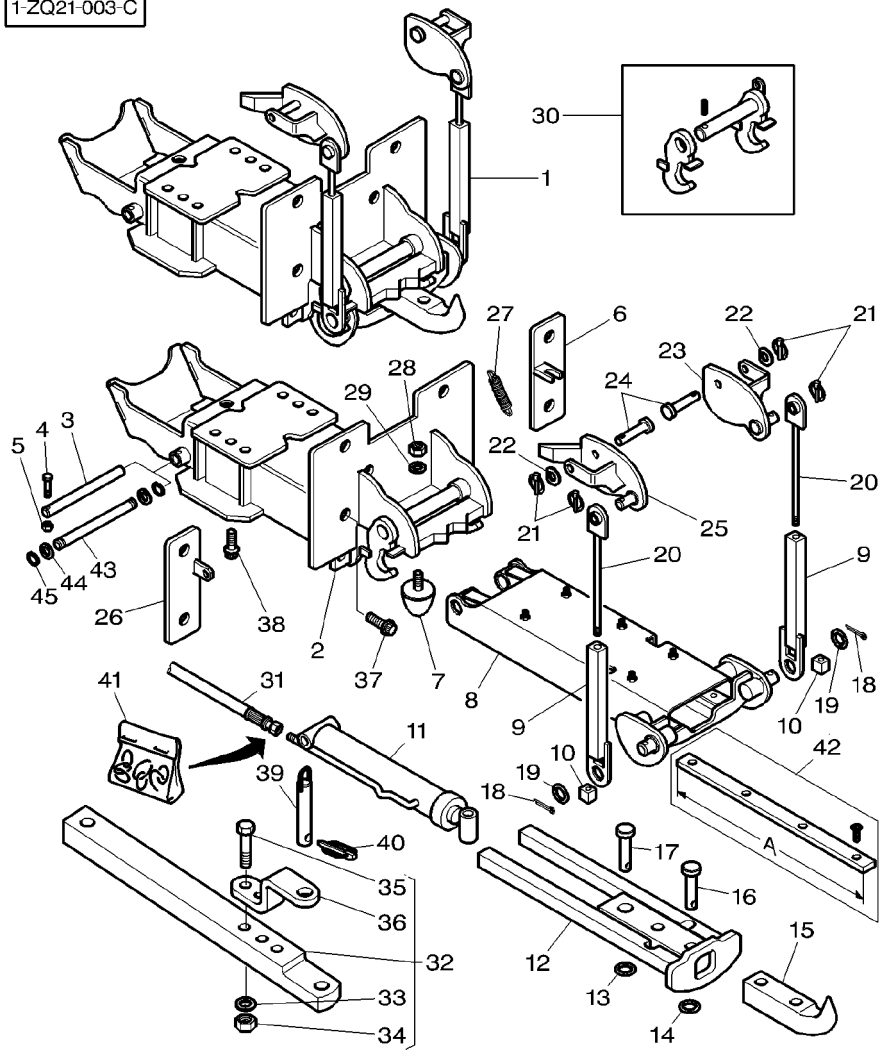

1	3792667M91		17-OCT-2000	**1**	HOOK	CROCHET GANCIO	HAKEN GANCHO
1	3792667M92		18-OCT-2000	**1**	HOOK	CROCHET GANCIO	HAKEN GANCHO
2		1	REF N0 1	**1**	FRAME	BATI TELAIO	RAHMEN BASTIDOR
3	3010904X1	1	17-OCT-2000	**1**	BOLT	BOULON BULLONE	MASCH.SCHRAUBE PERNO
4	3792645M1	1	17-OCT-2000	**1**	CLEVIS PIN	AXE PERNO D'ATTACCO	SPLINTBOLZEN BULON CILINDRICO
5	1441461X1	1	17-OCT-2000	**1**	NUT METRIC	ECROU METRIQUE DADO METRICO	MUTTER METRISCH TUERCA METRICO
6	3792663M91	1	17-OCT-2000	**1**	SUPPORT	SUPPORT SUPPORTO	LAGERUNG DISPOS.DE SOSTEN
7	3792083M1	1		**1**	BUFFER	BUTOIR RESPINGENTE	PUFFER PARACHOQUES
8	3792646M91	1	17-OCT-2000	**1**	HOUSING	CARTER CARCASSA	GEHAEUSE ALOJAMIENTO
8	3794178M91	1	18-OCT-2000	**1**	HOUSING	CARTER CARCASSA	GEHAEUSE ALOJAMIENTO
9	3792658M91	1		**2**	SLIDER BEARING	COULISSEAU CUSCINETTO GUIDA	GLEITLAGER COJINETE DESPLAZ
10	3792081M1	1		**2**	NUT	ECROU DADO	MUTTER TUERCA
11	3792647M1	1		**1**	RAM	VERIN CILINDRO IDRAUL.	HYDR.ZYLINDER ARIETE
12	3792648M91	1		**1**	PEDESTAL	SOCLE PIEDISTALLO	SOCKEL PEDESTAL
13	352438X1	1		**1**	CIRCLIP	SEGMENT D ARRET ANELLO D'ARRESTO	SICHERUNGSRING CIRCULITO
14	392758X1	1		**1**	RING	ANNEAU ANELLO	RING ARO
15	3792649M1	1		**1**	DRAGBAR	TIMON TIMONE	KUPPLUNGSSTANGE TIMON
16	3792650M1	1		**1**	CLEVIS PIN	AXE PERNO D'ATTACCO	SPLINTBOLZEN BULON CILINDRICO
17	3792660M1	1		**1**	CLEVIS PIN	AXE PERNO D'ATTACCO	SPLINTBOLZEN BULON CILINDRICO
18	390721X1	1		**2**	PIN	GOUPILLE PERNO	BOLZEN PASADOR
19	3019558X1	1		**2**	WASHER	RONDELLE RONDELLA	UNTERLEGSCHEIBE ARANDELA
20	3792654M91	1		**2**	STEM	TIGE STELO	STIEL VASTAGO
21	3792091M1	1		**4**	PIN	GOUPILLE PERNO	BOLZEN PASADOR
22	3792664M1	1		**2**	WASHER	RONDELLE RONDELLA	UNTERLEGSCHEIBE ARANDELA
23	3792652M91	1	◀	**1**	EXTENSION	RALLONGE PROLUNGA	VERLAENGERUNG EXTENSION
24	3792651M1	1		**2**	CLEVIS PIN	AXE PERNO D'ATTACCO	SPLINTBOLZEN BULON CILINDRICO

Automatic Hitch **Crochet Automatique** **Automatische Anhaengekupplung** **Gancio Automatico** **Enganche Automatico**	**With Remote Control** **Avec Commande A Distance** **Mit Fernbedienung** **Con Comando** **Con Control Remoto**	**40-170**

Automatic Hook "Dromone"
Crochet Automatique "Dromone"
Automatish Zughaken "Dromone"
Gancio Automatico "Dromone"
Gancho Automatico "Dromone"

1-ZQ21-003-C

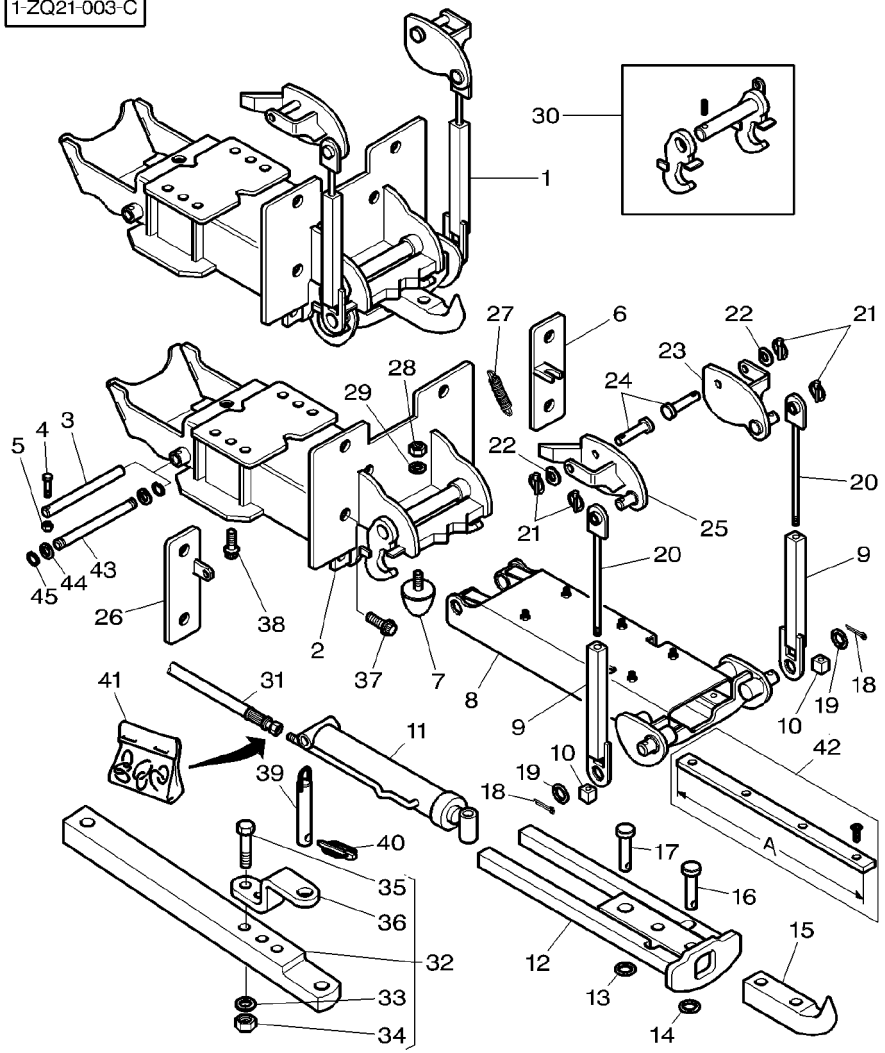

25	3792653M91	1 ▶		**1**	EXTENSION	RALLONGE PROLUNGA	VERLAENGERUNG EXTENSION
26	3792665M91	1 ▶| 17-OCT-2000		**1**	SUPPORT	SUPPORT SUPPORTO	LAGERUNG DISPOS.DE SOSTEN
27	3792666M1	1		**1**	SPRING	RESSORT MOLLA	FEDER MUELLE
28	1440329X1	1		**1**	LOCKNUT	ECROU BLOCAGE AUTOBLOCCANTE	FLACHMUTTER CONTRATUERCA
29	390734X1	1		**1**	WASHER METRIC	RONDELLE METR. RONDELLA METRICO	SCHEIBE METRISCH ARANDELA METRICO
30	3792834M91	1		**1**	LATCH	VERROU SALISCENDI	RIEGEL CERROJO
31	3792727M1			**2**	HYDR HOSE	FLEXIBLE TUBOFLEX IDRAUL	HYDR SCHLAUCH TUBO HIDRAULICO
32	3792662M91			**1**	BAR	BARRE BARRA	STAB BARRA
33	1441664X1	32		**2**	WASHER METRIC	RONDELLE METR. RONDELLA METRICO	SCHEIBE METRISCH ARANDELA METRICO
34	339034X1	32		**2**	NUT METRIC	ECROU METRIQUE DADO METRICO	MUTTER METRISCH TUERCA METRICO
35	339616X1	32	M16X120	**2**	BOLT METRIC	BOULON METRIQUE BULLONE METRICO	MASCH.SCHRB MET PERNO METRICO
36	3792786M1	32		**1**	CLEVIS	CHAPE GANCIO D'ATTACCO	GABELSTUECK GANCHO SEGURI.
37	3010562X1		M20X230	**6**	SCREW	VIS VITE	SCHRAUBE TORNILLO
37	3010777X1		M20X210	**2**	SCREW METRIC	VIS METRIQUE VITE METRICA	SCHRAUBE METR TORNILLO METRICO
38	3010561X1		M20X50	**6**	SCREW	VIS VITE	SCHRAUBE TORNILLO
39	3790349M91			**1**	PIN HITCH	BROCHE PERNO ATTACCO	KUPPLUNGSBOLZEN PASADOR ENGAN.
40	3382826M1			**1**	PIN	GOUPILLE PERNO	BOLZEN PASADOR
41	3903497M91	▶ 18-OCT-2000		**1**	KIT, JOINT	JEU JOINTS KIT GIUNTO	DICHTUNGSSATZ JUEGO JUNTAS
42	3903572M91	8 ◀▶	A=600MM	**2**	PARTS PACK	JEU PIECES PACCO RICAMBI	SATZ TEILE PAQUETE PIEZAS
42	3903573M91	8 ◀▶	A=250MM	**2**	PARTS PACK	JEU PIECES PACCO RICAMBI	SATZ TEILE PAQUETE PIEZAS
42	3903571M91	8 ◀▶	A=148MM	**2**	PARTS PACK	JEU PIECES PACCO RICAMBI	SATZ TEILE PAQUETE PIEZAS
43	3793999M1	1 ▶	18-OCT-2000	**1**	CLEVIS PIN	AXE PERNO D'ATTACCO	SPLINTBOLZEN BULON CILINDRICO
44	3794000M1	1 ▶	18-OCT-2000	**2**	THRUST WASHER	RONDELLE BUTEE RONDELLA REGGISP	ANLAUFSCHEIBE ARANDELA ACELER
45	**358956X1**	1		**2**	RING	ANNEAU ANELLO	RING ARO

Autohitch	**Dromone**
Attelage Automatique	**Dromone**
Selbsttaetige Kupplung	**Dromone**
Attacco Automatico	**Dromone**
Enganche Automatico	**Dromone**

40-175

Hydraulic Control
Commande Hydraulique
Hydraulischer Antrieb
Comando Idraulico
Mando Hidraulico

1-ZQ22-001-A

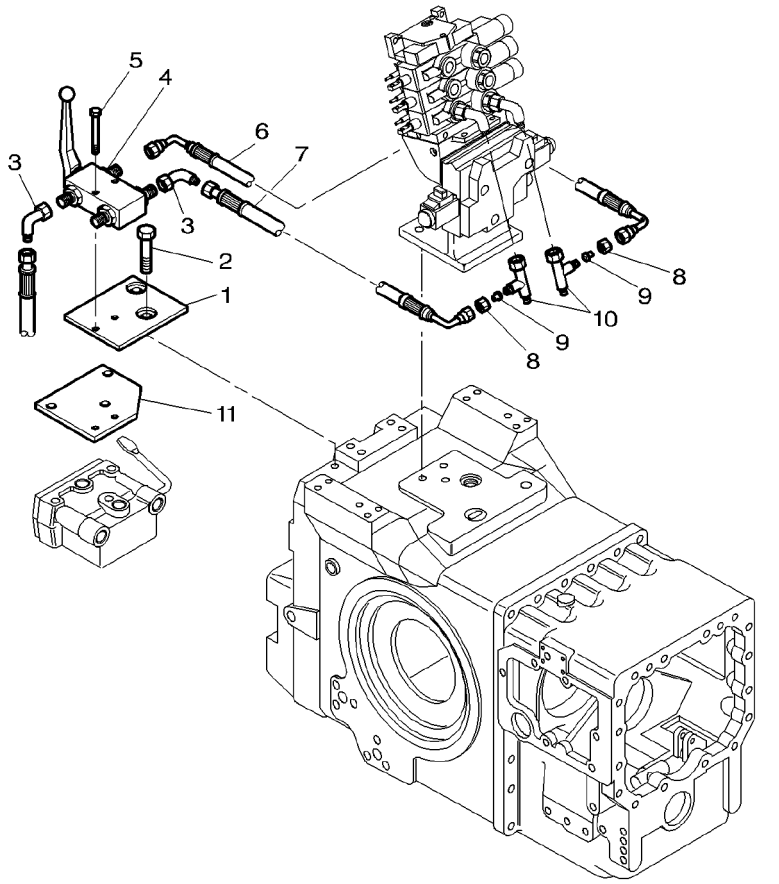

1	3792872M1	[B]	**1**	PLATE	PLAQUE PIASTRA	PLATTE PLATO
2	339123X1	[B] M8X20	**2**	SCREW METRIC	VIS METRIQUE VITE METRICA	SCHRAUBE METR TORNILLO METRICO
3	1442508X91		**3**	UNION	RACCORD RACCORDO	VERSCHRAUBUNG RACOR
4	3792875M92		**1**	VANE	VANNE ALETTA	LEITFLUEGEL PALETA
5	339229X1	M6X40	**2**	BOLT METRIC	BOULON METRIQUE BULLONE METRICO	MASCH.SCHRB MET PERNO METRICO
6	3792777M2	◄► 760MM	**1**	HYDR HOSE	FLEXIBLE TUBOFLEX IDRAUL	HYDR SCHLAUCH TUBO HIDRAULICO
7	3792776M1	◄► 570MM	**1**	HYDR HOSE	FLEXIBLE TUBOFLEX IDRAUL	HYDR SCHLAUCH TUBO HIDRAULICO
8	22576X		**2**	UNION NUT	ECROU RACCORD DADO D'UNIONE	ANSCHLUSSMUTTER TUERCA UNION
9	356629X1		**2**	REDUCER	REDUCTEUR RIDUTTORE	REDUZIERSTUECK REDUCTOR
10	364704X1		**2**	TEEPIECE	TE RACCORDO A T	T-STUECK PIEZA EN T
11	3792787M1	[A]	**1**	PLATE	PLAQUE PIASTRA	PLATTE PLATO

[A] WITH 4 DISTRIBUTORS
AVEC 4 DISTRIBUTEURS
MIT 4 VERTEILER
CON 4 DISTRIBUTORES
CON 4 DISTRIBUIDORS

[B] WITH 3 DISTRIBUTORS
AVEC 3 DISTRIBUTEURS
MIT 3 VERTEILER
CON 3 DISTRIBUTORES
CON 3 DISTRIBUIDORS

Automatic Hitch **Crochet Automatique** **Automatische Anhaengekupplung** **Gancio Automatico** **Enganche Automatico**	**With Remote Control** **Avec Commande A Distance** **Mit Fernbedienung** **Con Comando** **Con Control Remoto**	**40-180**

Hitch Support "Dromone"
Support De Crochet "Dromone"
Halter Der Anhaengerkupplung "Dromone"
Supporto Di Gancio "Dromone"
Soporte De Enganche "Dromone"

1-ZQ21-004-B

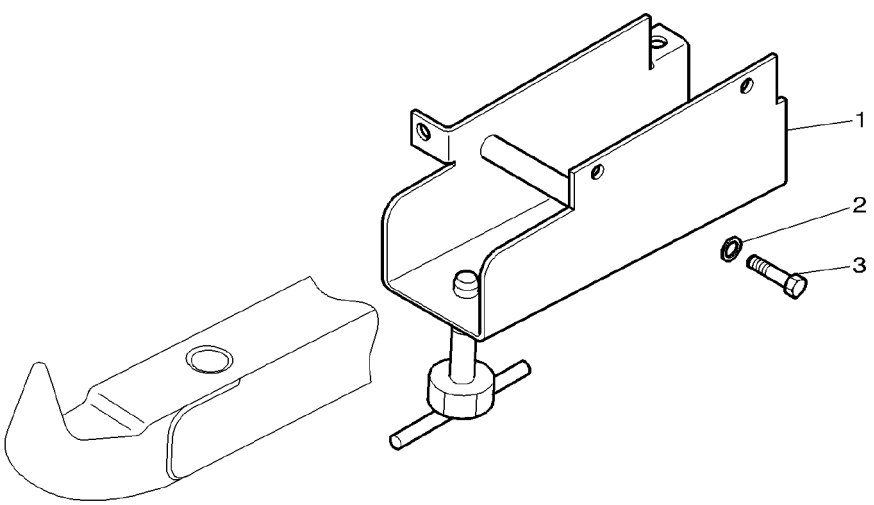

1	3783267M93		**1**	SUPPORT	SUPPORT SUPPORTO LAGERUNG DISPOS.DE SOSTEN
2	390972X1		**4**	WASHER METRIC	RONDELLE METR. RONDELLA METRICO SCHEIBE METRISCH ARANDELA METRICO
3	339123X1	M8X20	**4**	SCREW METRIC	VIS METRIQUE VITE METRICA SCHRAUBE METR TORNILLO METRICO

Automatic Hitch | **With Remote Control**
Crochet Automatique | **Avec Commande A Distance**
Automatische Anhaengekupplung | **Mit Fernbedienung**
Gancio Automatico | **Con Comando**
Enganche Automatico | **Con Control Remoto**

40-185

1-ZQ21-002-B

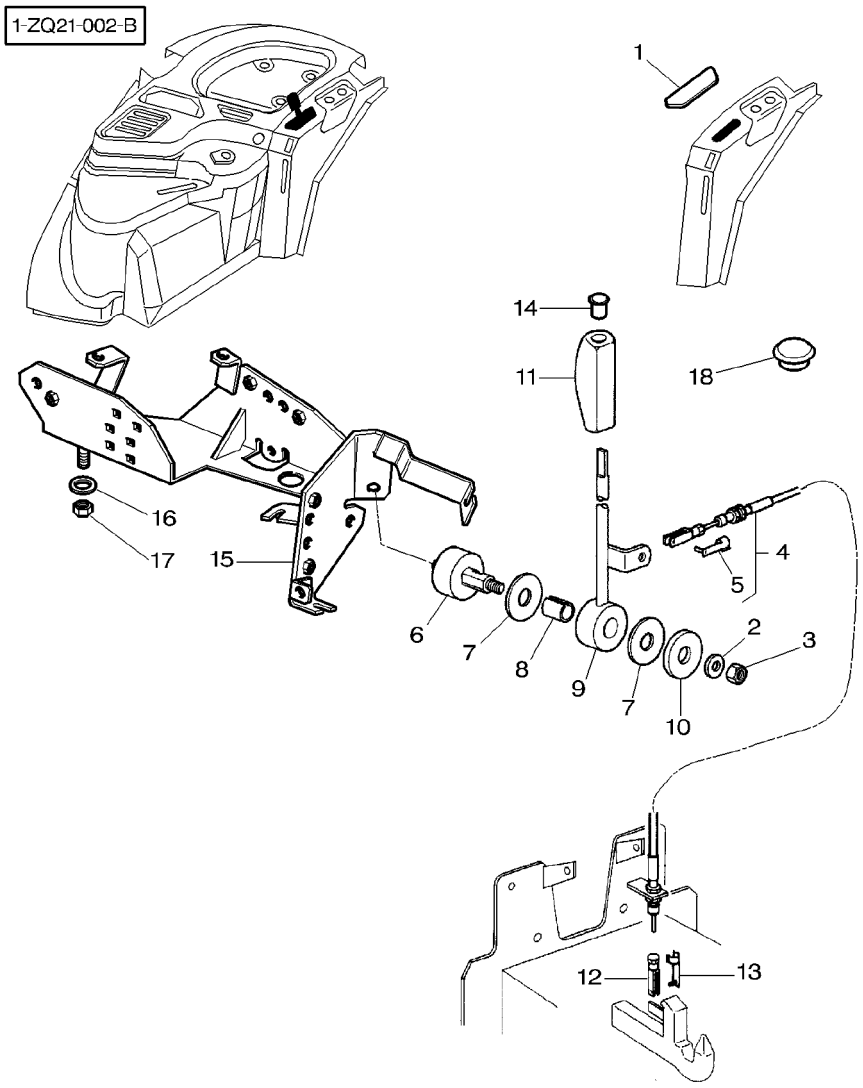

1	3712984M1	[A]	
2	390972X1		
3	1441461X1		
4	***3715975M3***		
5	3600190M1	4 ◀▶	28MM
5	3600191M1	4 ◀▶	40MM
6	3712276M1		
7	3386514M1		
8	3386515M1		
9	3712280M1		
10	3387447M1		
11	3715495M1		
12	392463X1		
13	3713042M1		
14	3715496M1		
15	3778480M91		
16	385361X1		
17	1441461X1		
18	3713587M1	[A]	
		∅	22MM

[A] WITHOUT AUTOMATIC HITCH
SANS CROCHET AUTOMATIQUE
OHNE AUTOMATISCHE ANHAENGEKUPPLUNG
SENZA GANCIO AUTOMATICO
SIN ENGANCHE AUTOMATICO

1	PLATE	PLAQUE PIASTRA	PLATTE PLATO
1	WASHER METRIC	RONDELLE METR. RONDELLA METRICO	SCHEIBE METRISCH ARANDELA METRICO
1	NUT METRIC	ECROU METRIQUE DADO METRICO	MUTTER METRISCH TUERCA METRICO
1	HOOK CABLE	CABL CDE CROCHET CAVO DE GANCHIO	HAKENKABEL CABLE DE GANCHO
1	CLEVIS PIN	AXE PERNO D'ATTACCO	SPLINTBOLZEN BULON CILINDRICO
1	CLEVIS PIN	AXE PERNO D'ATTACCO	SPLINTBOLZEN BULON CILINDRICO
1	CLEVIS PIN	AXE PERNO D'ATTACCO	SPLINTBOLZEN BULON CILINDRICO
2	FRICTION DISC	DISQUE FRICTION DISCO DI FRIZION	REIBSCHEIBE DISCO FRICCION
1	BEARING	COUSSINET CUSCINETTO	LAGER COJINETE
1	LEVER	LEVIER LEVA	HEBEL PALANCA
1	WASHER	RONDELLE RONDELLA	UNTERLEGSCHEIBE ARANDELA
1	HANDLE	POIGNEE MANIGLIA	HANDGRIFF MANETA
1	CLEVIS	CHAPE GANCIO D'ATTACCO	GABELSTUECK GANCHO SEGURI.
1	CLEVIS PIN	AXE PERNO D'ATTACCO	SPLINTBOLZEN BULON CILINDRICO
1	MUFF	CACHE MANICOTTO DEVIAN	FLANSCHMUFFE MANGUITO ACOPLAM
1	SUPPORT	SUPPORT SUPPORTO	LAGERUNG DISPOS.DE SOSTEN
4	WASHER METRIC	RONDELLE METR. RONDELLA METRICO	SCHEIBE METRISCH ARANDELA METRICO
4	NUT METRIC	ECROU METRIQUE DADO METRICO	MUTTER METRISCH TUERCA METRICO
1	PLUG	BOUCHON TAPPO	VERSCHL.STOPFEN TAPON

Platform Automatic Hitch	**With Remote Control**	**40-190**
Crochet Automatique Plateforme	**Avec Commande A Distance**	
Plattform Automatische Anhaengekupplung	**Mit Fernbedienung**	
Gancio Automatico Piattaforma	**Con Comando**	
Enganche Automatico Plataforma	**Con Control Remoto**	

1-ZQ33-001-A

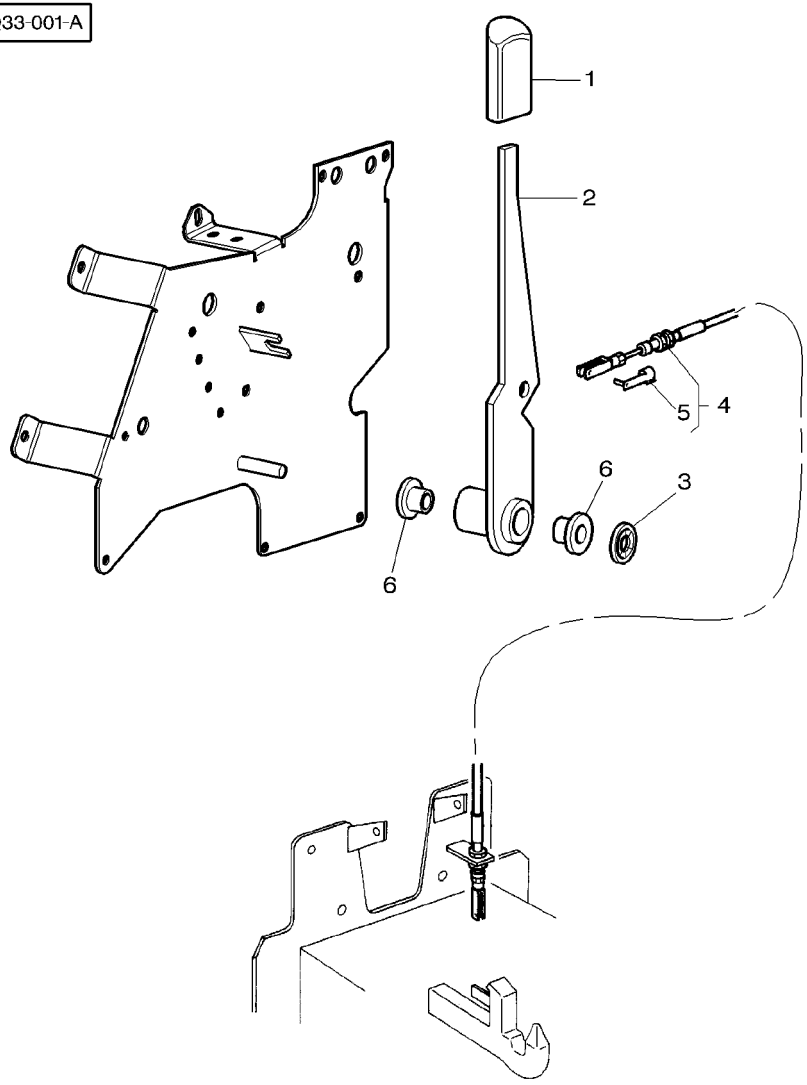

1	3712976M2		**1**	HANDLE	POIGNEE MANIGLIA	HANDGRIFF MANETA
2	3778401M1		**1**	LEVER	LEVIER LEVA	HEBEL PALANCA
3	3778418M1		**1**	WASHER	RONDELLE RONDELLA	UNTERLEGSCHEIBE ARANDELA
4	***3715975M3***		**1**	HOOK CABLE	CABL CDE CROCHET CAVO DE GANCHIO	HAKENKABEL CABLE DE GANCHO
5	3600190M1	4 ◄► 28MM	**1**	CLEVIS PIN	AXE PERNO D'ATTACCO	SPLINTBOLZEN BULON CILINDRICO
5	3600191M1	4 ◄► 40MM	**1**	CLEVIS PIN	AXE PERNO D'ATTACCO	SPLINTBOLZEN BULON CILINDRICO
6	3778411M1		**2**	BUSH	BAGUE BOCCOLA	BUCHSE CASQUILLO

Front Linkage 35000n
Attelage Avant 35000n
Vordere Kupplung 35000n
Attacco Anteriore 35000n
Enganche Delantero 35000n

40-195

1-ZQ37-004-B

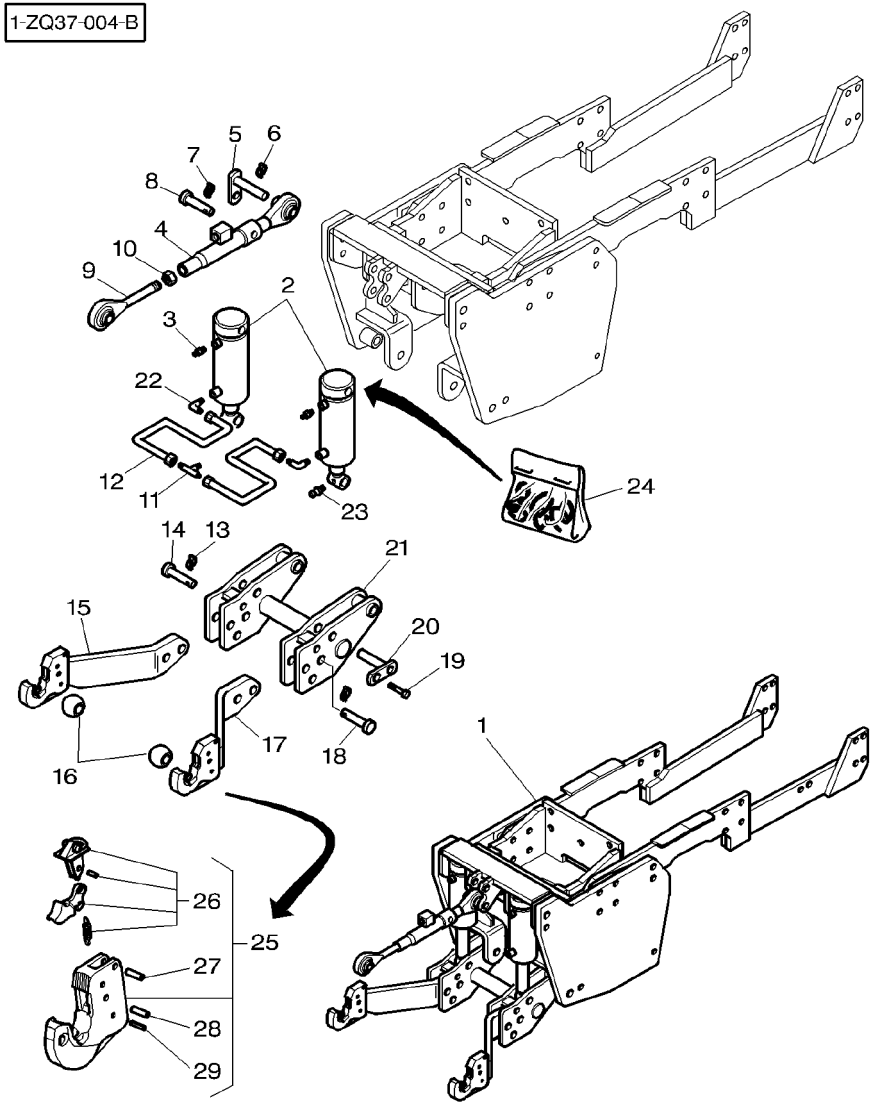

1	3783036M92	[A]	**1**	HITCH	ATTELAGE ATTACCO	ANHAENGEKUPPLUNG ENGANCHE
1	3783038M93	[B]	**1**	HITCH	ATTELAGE ATTACCO	ANHAENGEKUPPLUNG ENGANCHE
2	3782688M1	1	**2**	RAM	VERIN CILINDRO IDRAUL.	HYDR.ZYLINDER ARIETE
3	3782522M1	1	**2**	BREATHER	RENIFLARD SFIATATOIO	ENTLUEFTER RESPIRADERO
4	3782689M1	1	**1**	BAR	BARRE BARRA	STAB BARRA
5	3782680M1	1	**1**	CLEVIS PIN	AXE PERNO D'ATTACCO	SPLINTBOLZEN BULON CILINDRICO
6	3782684M1	1	**1**	CLIP	CLIP FERMAGLIO	SCHELLE CRAPA RETEN
7	3782691M1	1	**1**	CLIP	CLIP FERMAGLIO	SCHELLE CRAPA RETEN
8	3782690M1	1	**1**	CLEVIS PIN	AXE PERNO D'ATTACCO	SPLINTBOLZEN BULON CILINDRICO
9	***3900885M1***	1	**1**	TOGGLE	ROTULE ROTULA	GELENKZAPFEN PERNO ENGANCHE
10	3900887M1	1	**1**	NUT	ECROU DADO	MUTTER TUERCA
11	3902227M1	1	**1**	TEEPIECE	TE RACCORDO A T	T-STUECK PIEZA EN T
12	3783011M1	1	**2**	TUBE	TUBE TUBO	ROHR TUBO
13	3010460X1	1	**2**	PIN	GOUPILLE PERNO	BOLZEN PASADOR
14	3782678M1	1	**2**	CLEVIS PIN	AXE PERNO D'ATTACCO	SPLINTBOLZEN BULON CILINDRICO
15	3783839M1	1 ▶	**1**	ARM	BRAS BRACCIO	ARM BRAZO
16	***3782685M1***	1 CAT 3	**2**	TOGGLE	ROTULE ROTULA	GELENKZAPFEN PERNO ENGANCHE
16	***3782686M1***	1 CAT 2/3	**2**	TOGGLE	ROTULE ROTULA	GELENKZAPFEN PERNO ENGANCHE
17	3783840M1	1 ◀	**1**	ARM	BRAS BRACCIO	ARM BRAZO
18	3782682M1	1	**2**	CLEVIS PIN	AXE PERNO D'ATTACCO	SPLINTBOLZEN BULON CILINDRICO
19	3009505X1	1	**2**	SCREW METRIC	VIS METRIQUE VITE METRICA	SCHRAUBE METR TORNILLO METRICO
20	3782679M1	1	**2**	CLEVIS PIN	AXE PERNO D'ATTACCO	SPLINTBOLZEN BULON CILINDRICO
21	3782675M1	1	**1**	SUPPORT	SUPPORT SUPPORTO	LAGERUNG DISPOS.DE SOSTEN
22	3900868M1	1	**2**	ELBOW	COUDE GOMITO	WINKELSTUECK CODO
23	3900862M1	1	**6**	GREASER	GRAISSEUR INGRASSATORE	FETTNIPPEL ENGRASADOR
24	3903317M91		**1**	KIT, JOINT	JEU JOINTS KIT GIUNTO	DICHTUNGSSATZ JUEGO JUNTAS

1-ZQ37-004-B

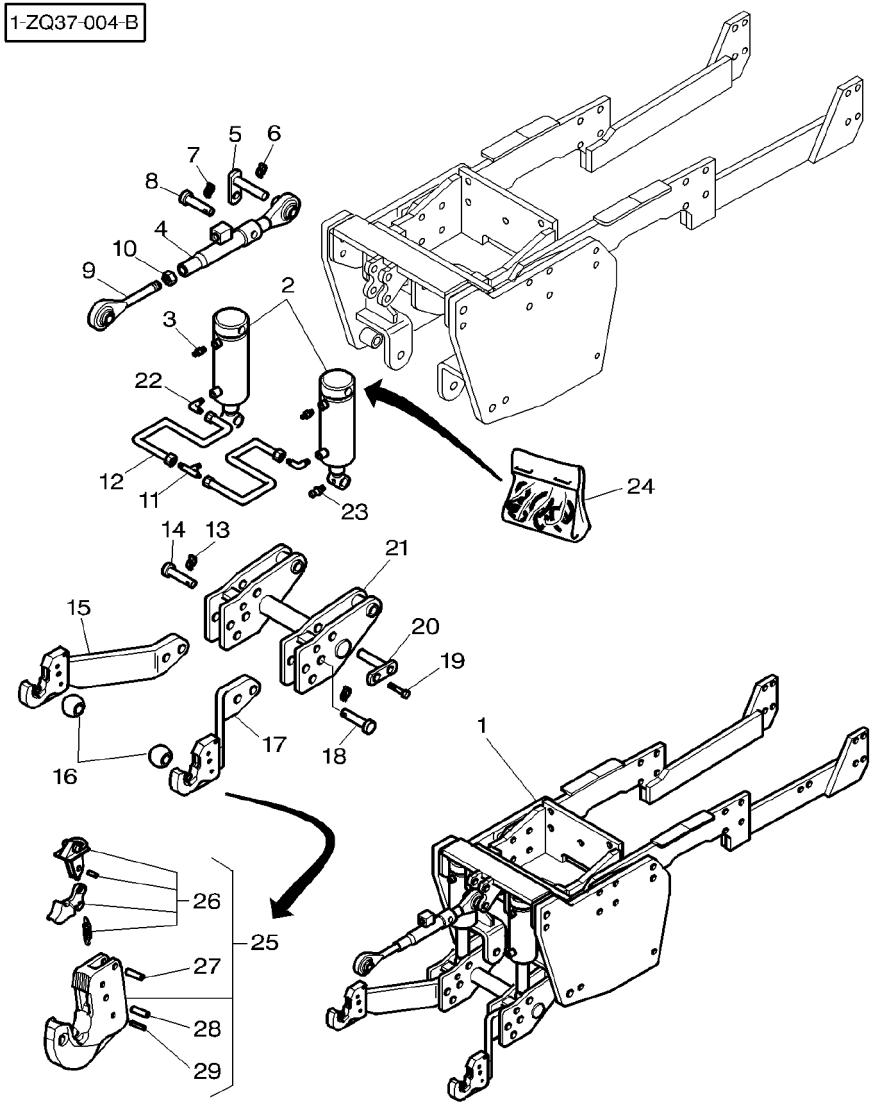

25			CAT 3/2 REF NO 15/17	**1** HOOK	CROCHET GANCIO JEU REPARATION KIT RIPARAZIONE GOUPILLE PERNO GOUPILLE PERNO GOUPILLE PERNO	HAKEN GANCHO REPARATURSATZ JUEGO REPARACION BOLZEN PASADOR BOLZEN PASADOR BOLZEN PASADOR
26	3903314M91	25		**1** KIT, REPAIR		
27	3006429X1	25	∅ 10X36MM	**1** PIN		
28	3008317X1	25	∅ 13X36MM	**1** PIN		
29	339783X1	25	∅ 6X32MM	**1** PIN		

[A] WITH FULL POWERSHIFT
AVEC FULL POWERSHIFT
MIT FULL POWERSHIFT
CON FULL POWERSHIFT
CON FULL POWERSHIFT

[B] WITH DYNASHIFT
AVEC DYNASHIFT
MIT DYNASHIFT
CON DYNASHIFT
CON DYNASHIFT

Front Linkage 35000n
Attelage Avant 35000n
Vordere Kupplung 35000n
Attacco Anteriore 35000n
Enganche Delantero 35000n

40-200

1-ZQ37-005-B

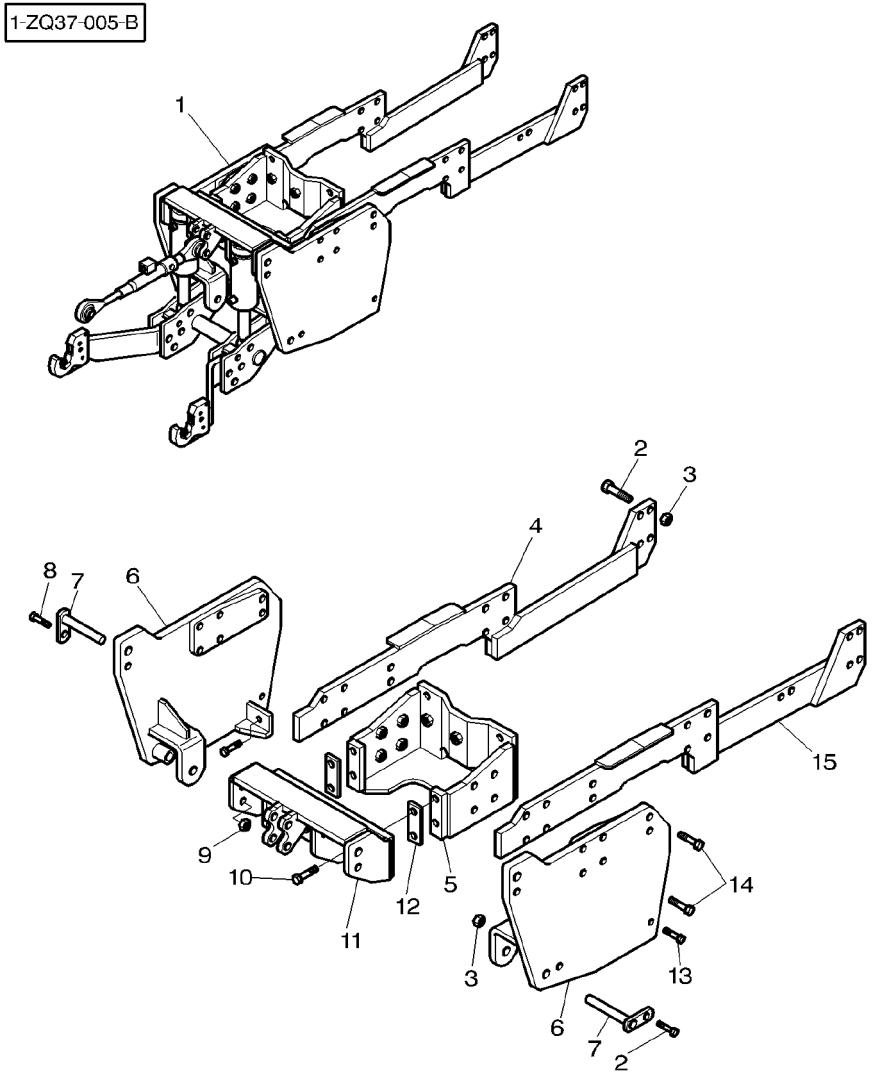

1	3783036M92	[A]	
1	3783038M93	[B]	
2	3001968X1	1	M20X60
2	1442668X1	1	M20X80
3	3009747X1	1	M20
4	3783367M1	1 ▶	
5	3783007M2	1	
6		1 ◀	REF NO 1
6		1 ▶	REF NO 1
7	3782681M1	1	
8	1442668X1	1	M20X80
9	3009747X1	1	
10	1441590X1	1	M20X50
11	3782989M1	1	
12	3782990M1	1	
13	339881X1	1	M16X60
14	391332X1	1	
15	3783368M1	1 ◀	

[A] WITH FULL POWERSHIFT
AVEC FULL POWERSHIFT
MIT FULL POWERSHIFT
CON FULL POWERSHIFT
CON FULL POWERSHIFT

[B] WITH DYNASHIFT
AVEC DYNASHIFT
MIT DYNASHIFT
CON DYNASHIFT
CON DYNASHIFT

1	HITCH	ATTELAGE ATTACCO	ANHAENGEKUPPLUNG ENGANCHE
1	HITCH	ATTELAGE ATTACCO	ANHAENGEKUPPLUNG ENGANCHE
10	SCREW	VIS VITE	SCHRAUBE TORNILLO
2	SCREW	VIS VITE	SCHRAUBE TORNILLO
4	NUT	ECROU DADO	MUTTER TUERCA
1	RUNNER	LONGERON GIRANTE	LAEUFER RUEDA GIRATORIA
1	SPACER	ENTRETOISE DISTANZIALE	ABSTANDSTUECK PIEZA DISTANCIA
1	RUNNER	LONGERON GIRANTE	LAEUFER RUEDA GIRATORIA
1	RUNNER	LONGERON GIRANTE	LAEUFER RUEDA GIRATORIA
4	CLEVIS PIN	AXE PERNO D'ATTACCO	SPLINTBOLZEN BULON CILINDRICO
2	SCREW	VIS VITE	SCHRAUBE TORNILLO
4	NUT	ECROU DADO	MUTTER TUERCA
6	BOLT METRIC	BOULON METRIQUE BULLONE METRICO	MASCH.SCHRB MET PERNO METRICO
1	SUPPORT	SUPPORT SUPPORTO	LAGERUNG DISPOS.DE SOSTEN
2	CHOCK	CALE PASSACAVO	UNTERLEG-KEIL CALZA
4	BOLT METRIC	BOULON METRIQUE BULLONE METRICO	MASCH.SCHRB MET PERNO METRICO
12	SCREW	VIS VITE	SCHRAUBE TORNILLO
1	RUNNER	LONGERON GIRANTE	LAEUFER RUEDA GIRATORIA

Front Linkage 35000n
Attelage Avant 35000n
Vordere Kupplung 35000n
Attacco Anteriore 35000n
Enganche Delantero 35000n

40-205

With Dynashift
Avec Dynashift
Mit Dynashift
Con Dynashift
Con Dynashift

1-ZQ37-007-B

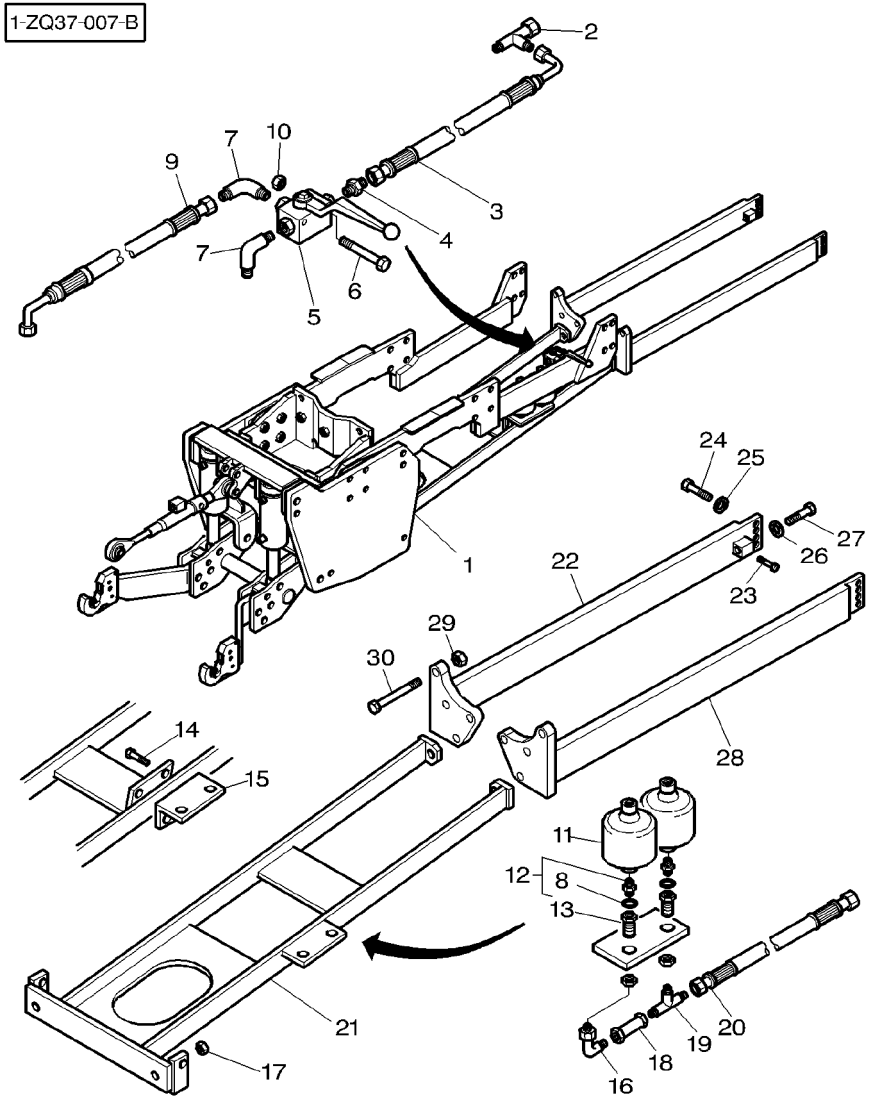

1	3783038M93			**1**	HITCH	ATTELAGE ATTACCO	ANHAENGEKUPPLUNG ENGANCHE
2	3782998M1	1		**1**	TEEPIECE	TE RACCORDO A T	T-STUECK PIEZA EN T
3	3782997M1	1		**1**	HYDR HOSE	FLEXIBLE TUBOFLEX IDRAUL	HYDR SCHLAUCH TUBO HIDRAULICO
4	3900869M1	1		**1**	UNION	RACCORD RACCORDO	VERSCHRAUBUNG RACOR
5	3900873M1	1		**1**	VANE	VANNE ALETTA	LEITFLUEGEL PALETA
6	3010920X1	1	M5X70	**2**	SCREW	VIS VITE	SCHRAUBE TORNILLO
7	3900868M1	1		**2**	ELBOW	COUDE GOMITO	WINKELSTUECK CODO
8	3900865M1	12		**1**	GASKET	JOINT GUARNIZIONE	DICHTSCHEIBE EMPAQUETADURA.
9	3783010M2	1 ◀▶	1840MM	**1**	HYDR HOSE	FLEXIBLE TUBOFLEX IDRAUL	HYDR SCHLAUCH TUBO HIDRAULICO
10	3005823X1	1		**2**	NUT	ECROU DADO	MUTTER TUERCA
11	3900877M1	1		**2**	ACCUMULATOR	ACCUMULATEUR ACCUMULATORE	AKKUMULATOR ACUMULADOR
12	3900878M1	1		**2**	UNION	RACCORD RACCORDO	VERSCHRAUBUNG RACOR
13	3900880M1	1		**2**	UNION	RACCORD RACCORDO	VERSCHRAUBUNG RACOR
14	3010922X1	1	M14X30 ➡| J087027	**2**	SCREW	VIS VITE	SCHRAUBE TORNILLO
15	3902225M1	1 ➡|	J087028	**1**	SUPPORT	SUPPORT SUPPORTO	LAGERUNG DISPOS.DE SOSTEN
16	3900883M1	1		**1**	ELBOW	COUDE GOMITO	WINKELSTUECK CODO
17	339034X1	1		**4**	NUT METRIC	ECROU METRIQUE DADO METRICO	MUTTER METRISCH TUERCA METRICO
18	3900882M1	1		**1**	TUBE	TUBE TUBO	ROHR TUBO
19	3900914M1	1		**1**	TEEPIECE	TE RACCORDO A T	T-STUECK PIEZA EN T
20	3782999M1	1 ◀▶	250MM ➡| J087027	**1**	HYDR HOSE	FLEXIBLE TUBOFLEX IDRAUL	HYDR SCHLAUCH TUBO HIDRAULICO
20	3783837M1	1 ◀▶	450MM |➡ J087028	**1**	HYDR HOSE	FLEXIBLE TUBOFLEX IDRAUL	HYDR SCHLAUCH TUBO HIDRAULICO
21	3783009M2	1		**1**	REINFORCEMENT	RENFORT RINFORZO	VERSTAERKUNG REFUERZO
22	3716943M2	1 ▶		**1**	REINFORCEMENT	RENFORT RINFORZO	VERSTAERKUNG REFUERZO
23	1440349X1	1	M8X30	**2**	SCREW METRIC	VIS METRIQUE VITE METRICA	SCHRAUBE METR TORNILLO METRICO
24	3010008X1	1	M16X50	**8**	SCREW METRIC	VIS METRIQUE VITE METRICA	SCHRAUBE METR TORNILLO METRICO
25	3010875X1	1		**8**	WASHER	RONDELLE RONDELLA	UNTERLEGSCHEIBE ARANDELA

Front Linkage 35000n
Attelage Avant 35000n
Vordere Kupplung 35000n
Attacco Anteriore 35000n
Enganche Delantero 35000n

40-205

With Dynashift
Avec Dynashift
Mit Dynashift
Con Dynashift
Con Dynashift

1-ZQ37-007-B

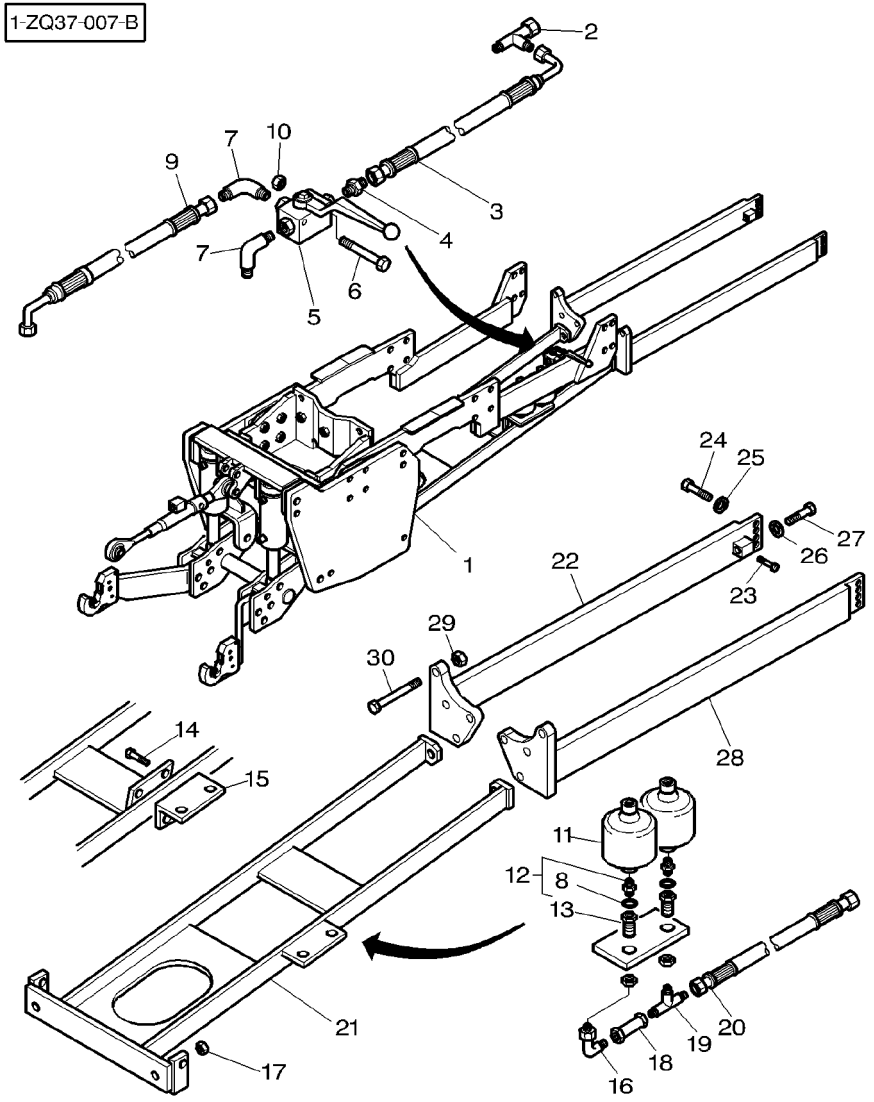

26	3619814M1	1	**2**	WASHER	RONDELLE RONDELLA	UNTERLEGSCHEIBE ARANDELA
27	3619813M1	1	**2**	SCREW	VIS VITE	SCHRAUBE TORNILLO
28	3716944M2	1 ◀	**1**	REINFORCEMENT	RENFORT RINFORZO	VERSTAERKUNG REFUERZO
29	3581642M1	1	**2**	NUT	ECROU DADO	MUTTER TUERCA
30	3010470X1	1 M22X160	**6**	SCREW	VIS VITE	SCHRAUBE TORNILLO

Front Linkage 35000n
Attelage Avant 35000n
Vordere Kupplung 35000n
Attacco Anteriore 35000n
Enganche Delantero 35000n

40-210

With Full Powershift
Avec Full Powershift
Mit Full Powershift
Con Full Powershift
Con Full Powershift

1-ZQ37-006-B

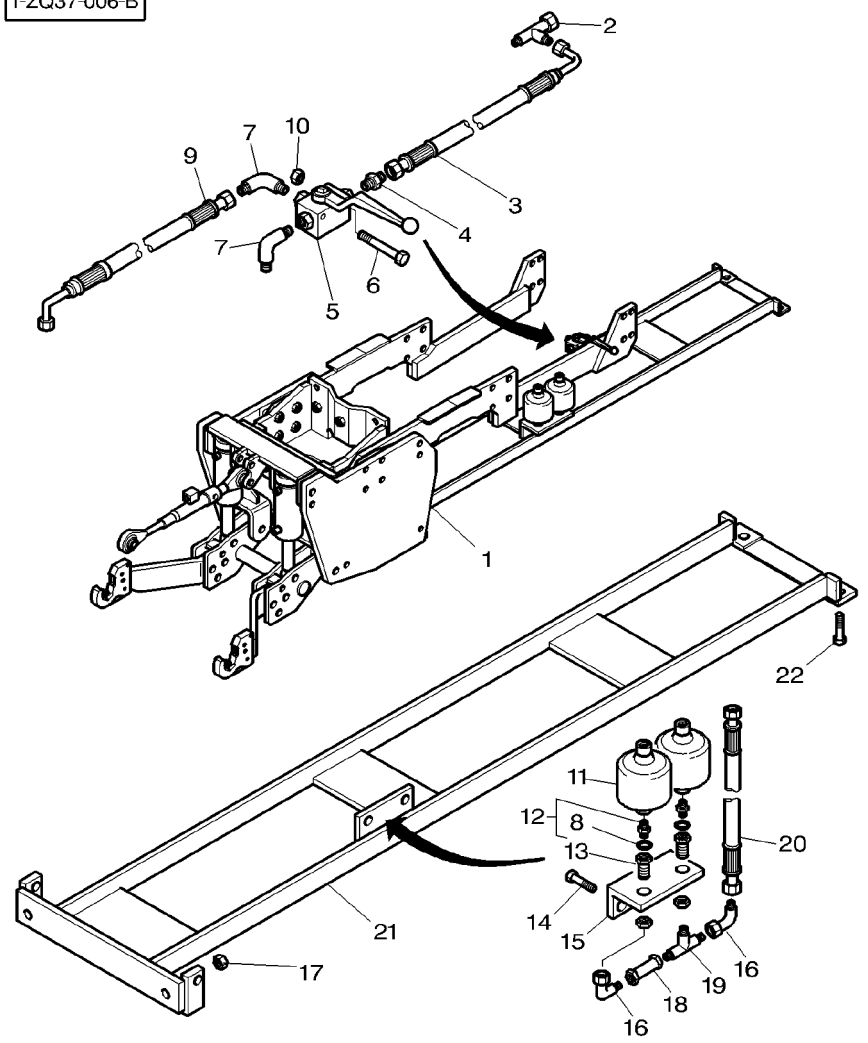

1	3783036M92			**1**	HITCH	ATTELAGE ATTACCO	ANHAENGEKUPPLUNG ENGANCHE
2	3782998M1	1		**1**	TEEPIECE	TE RACCORDO A T	T-STUECK PIEZA EN T
3	3782997M1	1		**1**	HYDR HOSE	FLEXIBLE TUBOFLEX IDRAUL	HYDR SCHLAUCH TUBO HIDRAULICO
4	3900869M1	1		**1**	UNION	RACCORD RACCORDO	VERSCHRAUBUNG RACOR
5	3900873M1	1		**1**	VANE	VANNE ALETTA	LEITFLUEGEL PALETA
6	3010920X1	1	M5X70	**2**	SCREW	VIS VITE	SCHRAUBE TORNILLO
7	3900868M1	1		**2**	ELBOW	COUDE GOMITO	WINKELSTUECK CODO
8	3900865M1	12		**1**	GASKET	JOINT GUARNIZIONE	DICHTSCHEIBE EMPAQUETADURA.
9	3783010M2	1	◄► 1840MM	**1**	HYDR HOSE	FLEXIBLE TUBOFLEX IDRAUL	HYDR SCHLAUCH TUBO HIDRAULICO
10	3005823X1	1		**2**	NUT	ECROU DADO	MUTTER TUERCA
11	3900877M1	1	50 Bars ➡| J067000	**2**	ACCUMULATOR	ACCUMULATEUR ACCUMULATORE	AKKUMULATOR ACUMULADOR
11	3900877M1	1	50 Bars ➡ J067001	**1**	ACCUMULATOR	ACCUMULATEUR ACCUMULATORE	AKKUMULATOR ACUMULADOR
11	3784036M1	1	26 Bars ➡ J067001	**1**	ACCUMULATOR	ACCUMULATEUR ACCUMULATORE	AKKUMULATOR ACUMULADOR
12	3900878M1	1		**2**	UNION	RACCORD RACCORDO	VERSCHRAUBUNG RACOR
13	3900880M1	1		**2**	UNION	RACCORD RACCORDO	VERSCHRAUBUNG RACOR
14	3010922X1	1	M14X30	**2**	SCREW	VIS VITE	SCHRAUBE TORNILLO
15	3902225M1	1		**1**	SUPPORT	SUPPORT SUPPORTO	LAGERUNG DISPOS.DE SOSTEN
16	3900883M1	1		**2**	ELBOW	COUDE GOMITO	WINKELSTUECK CODO
17	339034X1	1		**4**	NUT METRIC	ECROU METRIQUE DADO METRICO	MUTTER METRISCH TUERCA METRICO
18	3900882M1	1		**1**	TUBE	TUBE TUBO	ROHR TUBO
19	3900914M1	1		**1**	TEEPIECE	TE RACCORDO A T	T-STUECK PIEZA EN T
20	3782999M1	1	◄► 250MM	**1**	HYDR HOSE	FLEXIBLE TUBOFLEX IDRAUL	HYDR SCHLAUCH TUBO HIDRAULICO
21	3783008M1	1		**1**	REINFORCEMENT	RENFORT RINFORZO	VERSTAERKUNG REFUERZO
22	3010921X1	1	M16X50	**4**	SCREW	VIS VITE	SCHRAUBE TORNILLO

Pto Shaft
Arbre De Prise De Force
Zapfwelle
Albero Presa Di Forza
Eje Toma De Fuerza

50-5

8 Speed Transmission With Dynashift
Boite 8 Vitesses Avec Dynashift
8 Gang Getriebe Mit Dynashift
Cambio A 8 Velocita Con Dynashift
Caja De 8 Velocidades Con Dynashift

1-ZX18-009-A

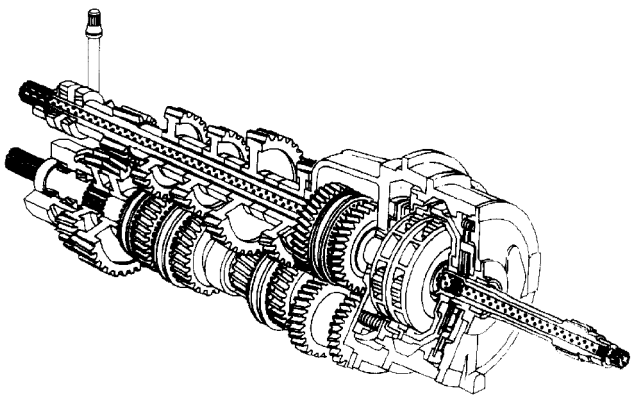

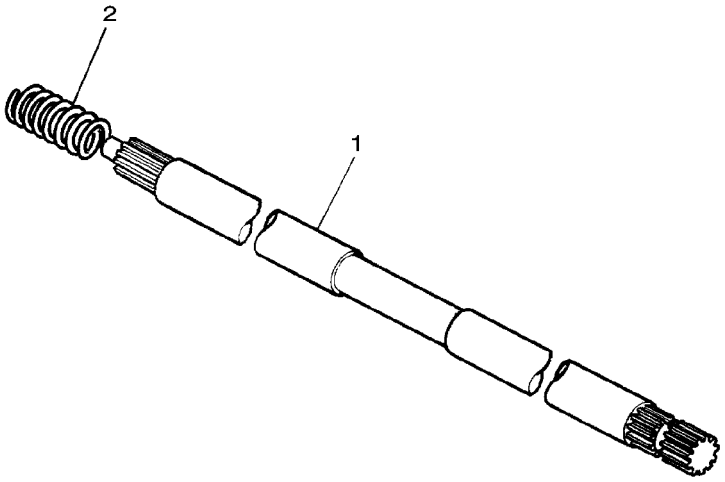

1	3716339M2		**1**	SHAFT	ARBRE ALBERO	WELLE ARBOL
1	3793584M1	[A]	**1**	SHAFT	ARBRE ALBERO	WELLE ARBOL
2	3716340M2		**1**	SPRING	RESSORT MOLLA	FEDER MUELLE

[A] WITH POWER SHUTTLE
AVEC INVERSEUR SOUS COUPLE
MIT UNTER DREHMOMENT
CON SOTTO COPPIA
CON INVERSOR SUB PAR

Pto Shaft
Arbre De Prise De Force
Zapfwelle
Albero Presa Di Forza
Eje Toma De Fuerza

50-10

With Full Powershift
Avec Full Powershift
Mit Full Powershift
Con Full Powershift
Con Full Powershift

1-ZX18-003-A

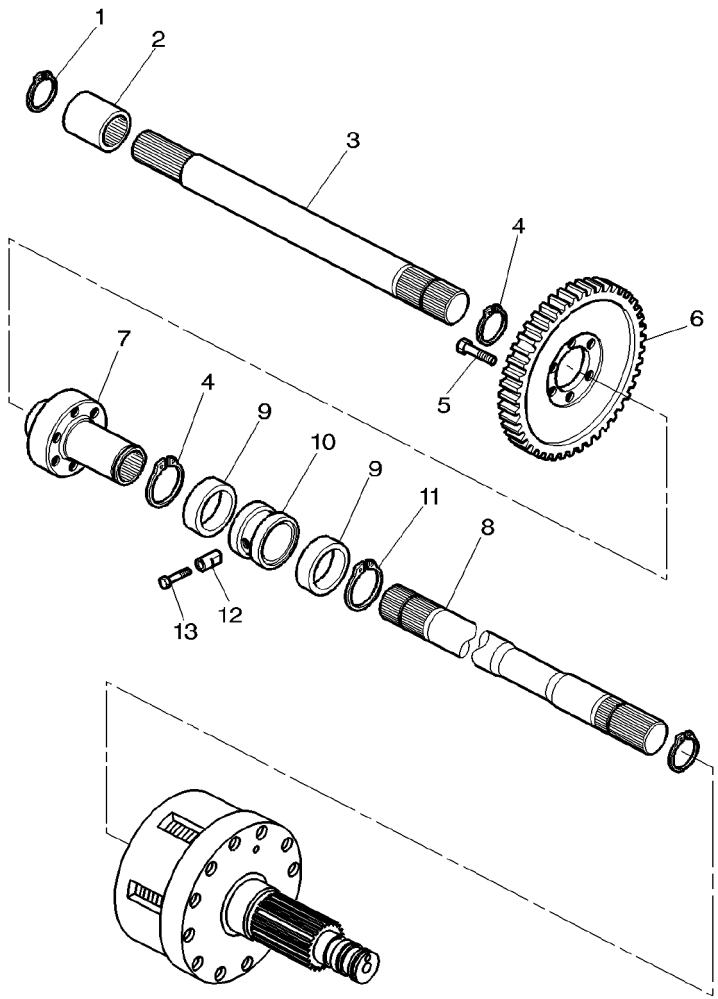

1	3019268X1		**1**	CIRCLIP	SEGMENT D ARRET ANELLO D'ARRESTO	SICHERUNGSRING CIRCULITO
2	3716460M1		**1**	SLEEVE	MANCHON MANICOTTO	HUELSE MANCHA
3	3716418M1		**1**	SHAFT	ARBRE ALBERO	WELLE ARBOL
4	339469X1		**2**	SEGMENT	SEGMENT SEGMENTO	SEGMENT SEGMENTO
5	3010969X1	M10X20	**6**	SCREW METRIC	VIS METRIQUE VITE METRICA	SCHRAUBE METR TORNILLO METRICO
6	3716420M1	87	**1**	PINION	PIGNON PIGNONE	RITZEL PINON
7	3716489M1		**1**	HUB	MOYEU MOZZO	NABE CUBO
8	3716421M2		**1**	SHAFT	ARBRE ALBERO	WELLE ARBOL
9	3003277X1		**2**	BEAR. 6010	RLT 6010 CUSC. 6010	LAGER 6010 RODA. 6010
10	3716564M2		**1**	BUSH	BAGUE BOCCOLA	BUCHSE CASQUILLO
11	391129X1		**1**	CIRCLIP	SEGMENT D ARRET ANELLO D'ARRESTO	SICHERUNGSRING CIRCULITO
12	3716807M1		**1**	PIN	GOUPILLE PERNO	BOLZEN PASADOR
13	3019642X1	M16	**1**	PLUG	BOUCHON TAPPO	VERSCHL.STOPFEN TAPON

Pto Shaft
Arbre De Prise De Force
Zapfwelle
Albero Presa Di Forza
Eje Toma De Fuerza

50-15

With Dynashift
Avec Dynashift
Mit Dynashift
Con Dynashift
Con Dynashift

1-ZX18-002-A

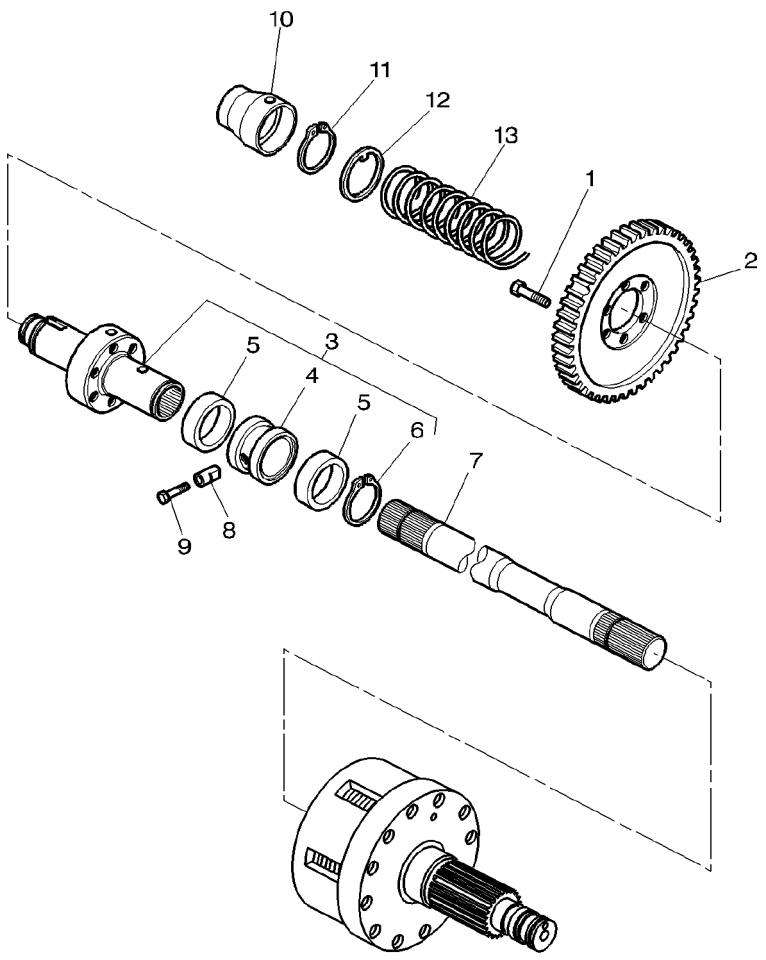

1	3010969X1	M10X20	**6**	SCREW METRIC	VIS METRIQUE VITE METRICA	SCHRAUBE METR TORNILLO METRICO
2	3716420M1	87	**1**	PINION	PIGNON PIGNONE	RITZEL PINON
3	3791963M11		**1**	HUB	MOYEU MOZZO	NABE CUBO
4	3791929M1	3	**1**	BUSH	BAGUE BOCCOLA	BUCHSE CASQUILLO
5	3003277X1	3	**2**	BEAR. 6010	RLT 6010 CUSC. 6010	LAGER 6010 RODA. 6010
6	391129X1	3	**1**	CIRCLIP	SEGMENT D ARRET ANELLO D'ARRESTO	SICHERUNGSRING CIRCULITO
7	3790868M1		**1**	SHAFT	ARBRE ALBERO	WELLE ARBOL
8	3716496M2		**1**	CENTRALISER	PION CENTRALIZZATORE	FUEHRUNGSKORB CENTRALIZADOR
9	3019642X1	M16	**1**	PLUG	BOUCHON TAPPO	VERSCHL.STOPFEN TAPON
10	3791925M1		**1**	SPACER	ENTRETOISE DISTANZIALE	ABSTANDSTUECK PIEZA DISTANCIA
11	1442697X1		**1**	CIRCLIP	SEGMENT D ARRET ANELLO D'ARRESTO	SICHERUNGSRING CIRCULITO
12	3791928M1		**1**	WASHER	RONDELLE RONDELLA	UNTERLEGSCHEIBE ARANDELA
13	3791926M1		**1**	SPRING	RESSORT MOLLA	FEDER MUELLE

Independant Power Take Off Clutch
Embrayage De Prise De Force Independante
Ipto Kupplung
Frizione Pto Indipendente
Embrague De Toma De Fuerza Independiente

50-20

5 Disc
5 Disques
5 Bremsscheibe
5 Disci
5 Discos

1-ZG23-005-A

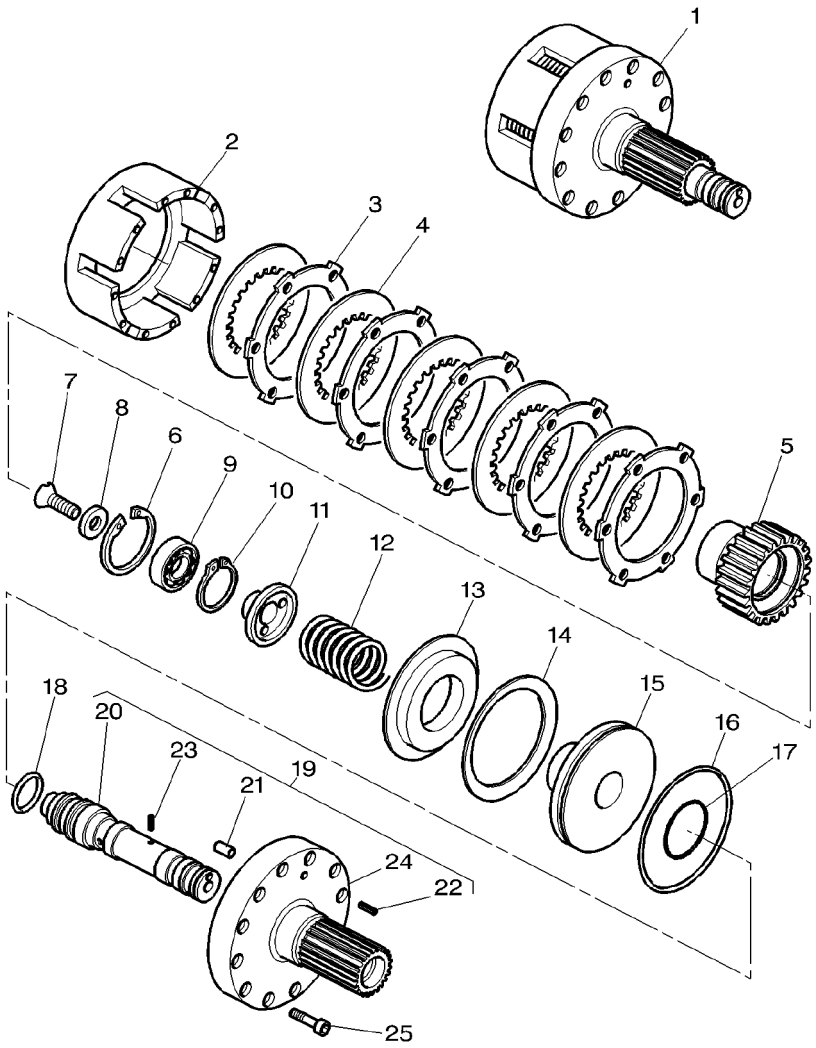

1	3716063M14			**1**	CLUTCH	EMBRAYAGE	SCHALTKUPPLUNG
						FRIZIONE	EMBRAGUE
2	3716064M1	1		**1**	COVER	COUVERCLE	DECKEL
						COPERCHIO	CUBIERTA
3	3387347M1	1		**5**	DISC	DISQUE	SCHEIBE
						DISCO	DISCO
4	3387346M1	1		**5**	COUNTERPLATE	CONTRE PLAQUE	GEGENPLATTE
						CONTROPIASTRA	CONTRAPLACA
5	3716033M1	1		**1**	HUB	MOYEU	NABE
						MOZZO	CUBO
6	3716080M1	1		**1**	RING	ANNEAU	RING
						ANELLO	ARO
7	3009450X1	1	M10X20	**1**	SCREW	VIS	SCHRAUBE
						VITE	TORNILLO
8	3389211M1	1		**1**	WASHER	RONDELLE	UNTERLEGSCHEIBE
						RONDELLA	ARANDELA
9	3010767X1	1		**1**	BEAR. 6004	RLT 6004	LAGER 6004
						CUSC. 6004	RODA. 6004
10	391061X1	1		**1**	CIRCLIP	SEGMENT D ARRET	SICHERUNGSRING
						ANELLO D'ARRESTO	CIRCULITO
11	3716034M1	1		**1**	STOP	BUTEE	ANSCHLAG
						STOP	PARO
12	3582893M1	1		**1**	SPRING	RESSORT	FEDER
						MOLLA	MUELLE
13	3387198M1	1		**1**	SUPPORT	SUPPORT	LAGERUNG
						SUPPORTO	DISPOS.DE SOSTEN
14	3619148M1	1		**1**	CUP SPRING	RONDELLE RESSORT	TELLERFEDER
						MOLLA CAPPELLOTT	CUBETA DE MUELLE
15	3387193M1	1		**1**	PISTON	PISTON	KOLBEN
						PISTONE	PISTON
16	3582933M1	1		**1**	GASKET	JOINT	DICHTSCHEIBE
						GUARNIZIONE	EMPAQUETADURA.
17	3582934M1	1	∅ 29,74X3,53MM	**1**	GASKET	JOINT	DICHTSCHEIBE
						GUARNIZIONE	EMPAQUETADURA.
18	367156X1	1	∅ 26,64X2,62MM	**1**	O RING	JOINT TORIQUE	O-RING
						ANELLO OR	JUNTA TORICA
19	3716061M12	1		**1**	SUPPORT	SUPPORT	LAGERUNG
						SUPPORTO	DISPOS.DE SOSTEN
20	3716030M1	19		**1**	CLEVIS PIN	AXE	SPLINTBOLZEN
						PERNO D'ATTACCO	BULON CILINDRICO
21	3009351X1	19		**1**	SCREW	VIS	SCHRAUBE
						VITE	TORNILLO
22	1872134M92	19		**1**	VALVE CHECK	VALVE CONTROLE	PRUEFVENTIL
						VALVOLA RITEGNO	VALVULA D CIERRE
23	3006442X1	19	∅ 2 MM ◀▶ 12 MM	**1**	PIN	GOUPILLE	BOLZEN
						PERNO	PASADOR
24		19	REF 19	**1**	HUB CARRIER	SUPPORT MOYEU	NABENTRAEGER
						PORTA MOZZO	SOPORTE DE CUBO
25	3010785X1	1	M8X50	**12**	SCREW METRIC	VIS METRIQUE	SCHRAUBE METR
						VITE METRICA	TORNILLO METRICO

Independant Power Take Off Drive Mechanism	**Two Speed**	**50-25**	**Brakes**
Transmission Prise De Force Independante	**Deux Vitesses**		**Frein**
Ipto Mechanischer Antrieb	**2 Gang**		**Bremse**
Trasmissione Pto Indipendente	**Due Velocita**		**Freni**
Mecanismo De Mando De Toma De Fuerza Independiente	**2 Velocidades**		**Freno**

1-ZG24-001-A

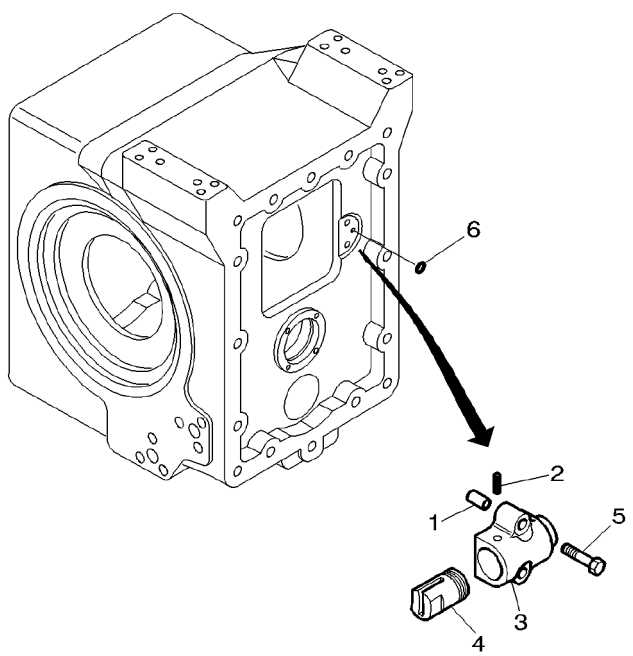

1	3000052X1		**2**	SLEEVE	MANCHON MANICOTTO	HUELSE MANCHA
2	**1440961X1**	∅ 4 MM ◀▶ 10 MM	**1**	PIN	GOUPILLE PERNO	BOLZEN PASADOR
3	3716181M1	➡| J062012	**1**	CASE ASSY	BOITIER CARCASSA COMPLET	GEHAEUSE KPL CAJA COMPLETA
3	3793768M1	➡ J062013	**1**	CASE ASSY	BOITIER CARCASSA COMPLET	GEHAEUSE KPL CAJA COMPLETA
4	3716180M1		**1**	PISTON	PISTON PISTONE	KOLBEN PISTON
5	3004715X1	M8X60	**2**	SCREW	VIS VITE	SCHRAUBE TORNILLO
6	1440011X1		**1**	O RING	JOINT TORIQUE ANELLO OR	O-RING JUNTA TORICA

Independant Power Take Off Clutch
Embrayage De Prise De Force Independante
Ipto Kupplung
Frizione Pto Indipendente
Embrague De Toma De Fuerza Independiente

50-30

1-ZG23-003-A

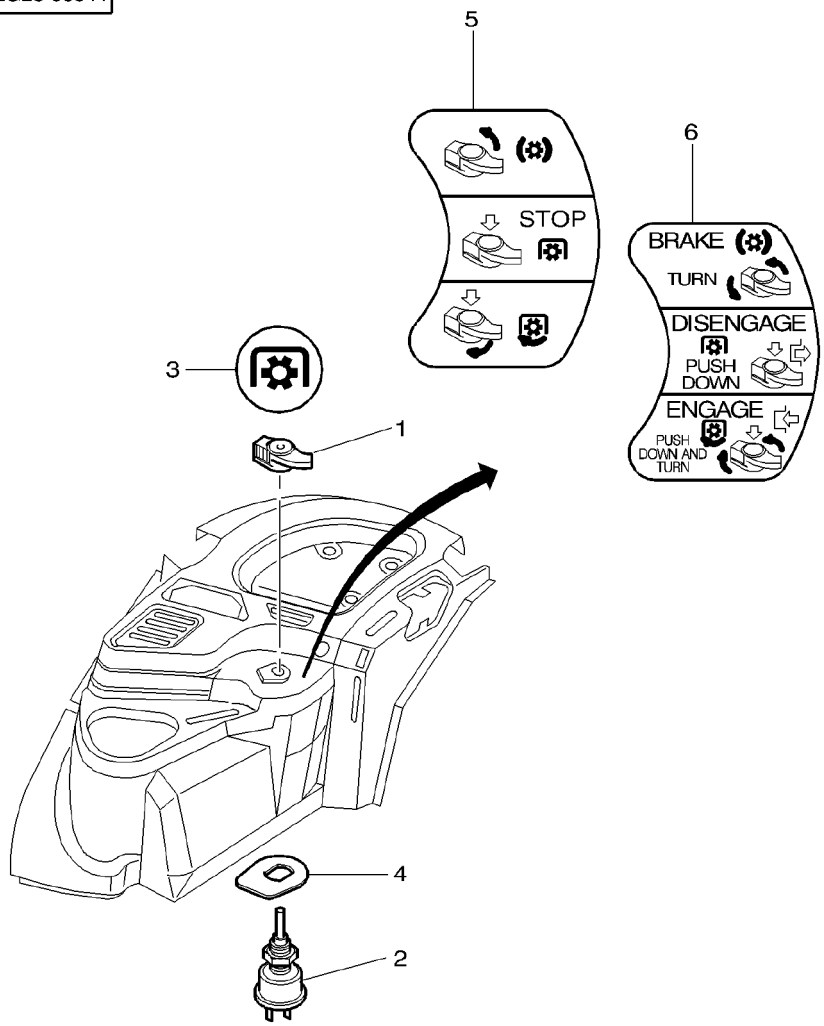

1	3778562M2		**1**	BUTTON	BOUTON PULSANTE	KNOPFTASTE PULSADOR
2	***3619445M1***		**1**	SWITCH,INDIRECT	CONTACTEUR INTERRUTTORE IND	KONTAKTSCHALTER CONTACTOR
3	3781792M1		**1**	DECAL	DECALCOMANIE DECALCOMANIA	AUFKLEBER CALCOMANIA
4	3781924M1		**1**	PLATE	PLAQUE PIASTRA	PLATTE PLATO
5	3782569M1		**1**	DECAL	DECALCOMANIE DECALCOMANIA	AUFKLEBER CALCOMANIA
6	3781649M2	(US)	**1**	DECAL	DECALCOMANIE DECALCOMANIA	AUFKLEBER CALCOMANIA

Pto Shaft
Arbre De Prise De Force
Zapfwelle
Albero Presa Di Forza
Eje Toma De Fuerza

50-35

1-ZX18-006-A

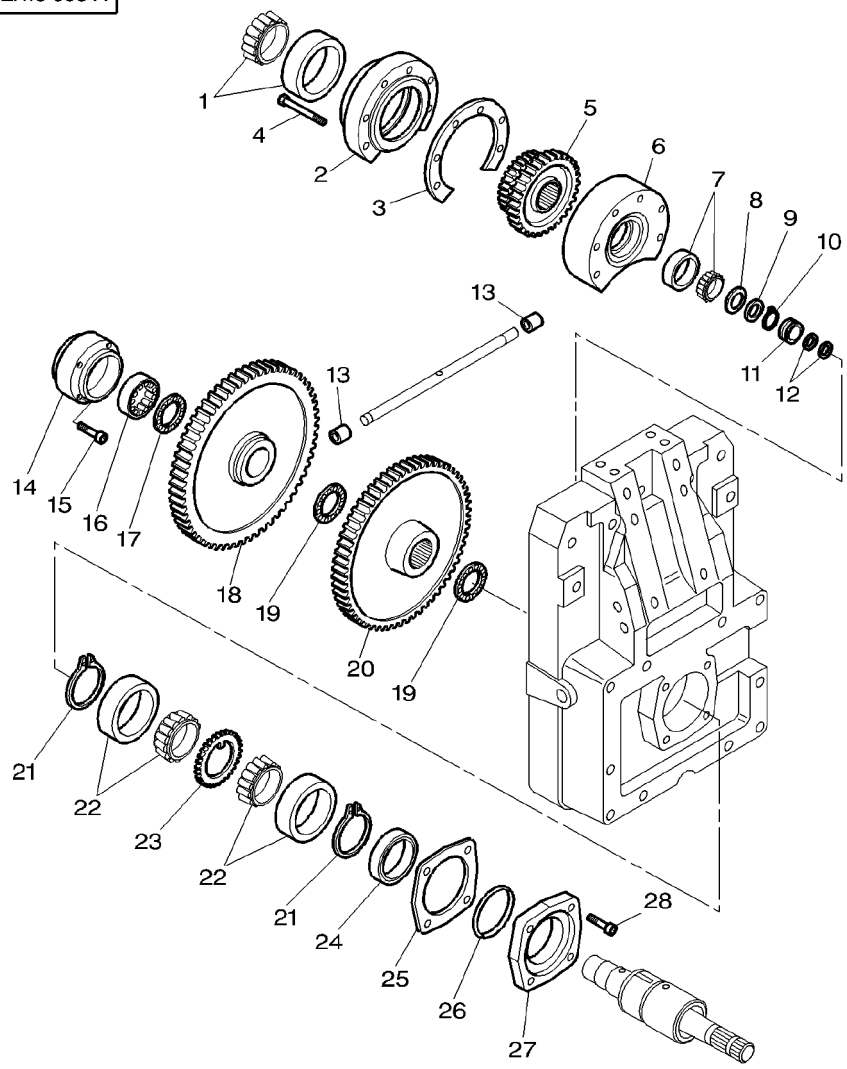

1	3010034X91		1	BEARING ASSY	ROULEMENT CUSCINETTO COMPL	RADIALLAGER RODAMIENTO RAD
2	3716001M2		1	BEARING CARRIER	PALIER CUSCINETTO SUPP-	LAGER-GEHAEUSE TEJUELO
3	3716037M1	⧗ 0,1 MM	X	CHOCK	CALE PASSACAVO	UNTERLEG-KEIL CALZA
3	3716038M1	⧗ 0,4 MM	X	CHOCK	CALE PASSACAVO	UNTERLEG-KEIL CALZA
4	339488X1	M10x85	6	BOLT METRIC	BOULON METRIQUE BULLONE METRICO	MASCH.SCHRB MET PERNO METRICO
5	3716004M2	29/44 540/1000 RPM	1	PINION	PIGNON PIGNONE	RITZEL PINON
5	3716079M3	37/44 750/1000 RPM	1	PINION	PIGNON PIGNONE	RITZEL PINON
6	3716003M2		1	CASE ASSY	BOITIER CARCASSA COMPLET	GEHAEUSE KPL CAJA COMPLETA
7	3009853X1		1	BEARING TAPER	ROULEMNT CONIQUE CUSCINETTO CONIC	KEGELLAGER RODAMIENTO CONI
8	3716007M1		1	WASHER	RONDELLE RONDELLA	UNTERLEGSCHEIBE ARANDELA
9	3716028M1		1	WASHER	RONDELLE RONDELLA	UNTERLEGSCHEIBE ARANDELA
10	3010624X1		1	RING	ANNEAU ANELLO	RING ARO
11	3382868M1		1	BUSH	BAGUE BOCCOLA	BUCHSE CASQUILLO
12	**3382874M1**		2	SEGMENT	SEGMENT SEGMENTO	SEGMENT SEGMENTO
13	391563X1		2	PLUG	BOUCHON TAPPO	VERSCHL.STOPFEN TAPON
14	3716023M2		1	BEARING CARRIER	PALIER CUSCINETTO SUPP-	LAGER-GEHAEUSE TEJUELO
15	3009286X1	M8x35	4	SCREW	VIS VITE	SCHRAUBE TORNILLO
16	**1612707M1**		1	BEARING ASSY	ROULEMENT CUSCINETTO COMPL	RADIALLAGER RODAMIENTO RAD
17	**1610244M1**		1	WASHER	RONDELLE RONDELLA	UNTERLEGSCHEIBE ARANDELA
18	3387509M92	107 540 RPM	1	PINION	PIGNON PIGNONE	RITZEL PINON
18	3712002M12	99 750 RPM	1	PINION	PIGNON PIGNONE	RITZEL PINON
19	**1610243M2**		2	WASHER	RONDELLE RONDELLA	UNTERLEGSCHEIBE ARANDELA
20	3052440M92	92 1000 RPM	1	PINION	PIGNON PIGNONE	RITZEL PINON
21	3010554X1		2	CIRCLIP	SEGMENT D ARRET ANELLO D'ARRESTO	SICHERUNGSRING CIRCULITO
22	968634M91		2	BEARING ASSY	ROULEMENT CUSCINETTO COMPL	RADIALLAGER RODAMIENTO RAD
23	3716014M2		1	SPACER	ENTRETOISE DISTANZIALE	ABSTANDSTUECK PIEZA DISTANCIA

Pto Shaft
Arbre De Prise De Force
Zapfwelle
Albero Presa Di Forza
Eje Toma De Fuerza

50-35

1-ZX18-006-A

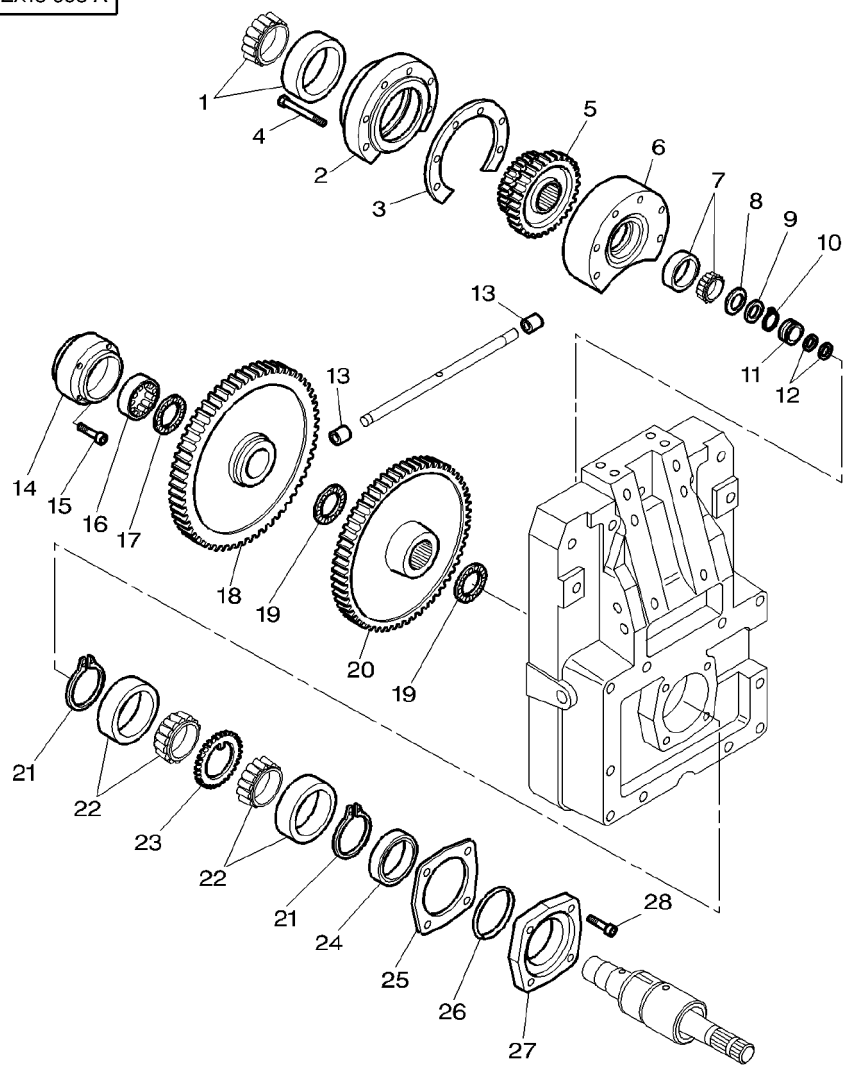

24	3716017M1		1	GASKET	JOINT GUARNIZIONE	DICHTSCHEIBE EMPAQUETADURA.
25	3716053M1	⧗ 0,1 MM	X	CHOCK	CALE PASSACAVO	UNTERLEG-KEIL CALZA
25	3716054M1	⧗ 0,4 MM	X	CHOCK	CALE PASSACAVO	UNTERLEG-KEIL CALZA
26	152623M1		1	O RING	JOINT TORIQUE ANELLO OR	O-RING JUNTA TORICA
27	3716022M1		1	HUB	MOYEU MOZZO	NABE CUBO
28	3009292X1	M10x25	4	SCREW	VIS VITE	SCHRAUBE TORNILLO

Pto Shaft
Arbre De Prise De Force
Zapfwelle
Albero Presa Di Forza
Eje Toma De Fuerza

50-40

Throttle Control
Commandes Manuelles
Drossel Steuerung
Commandi A Mano
Mandos Accelerador Manual

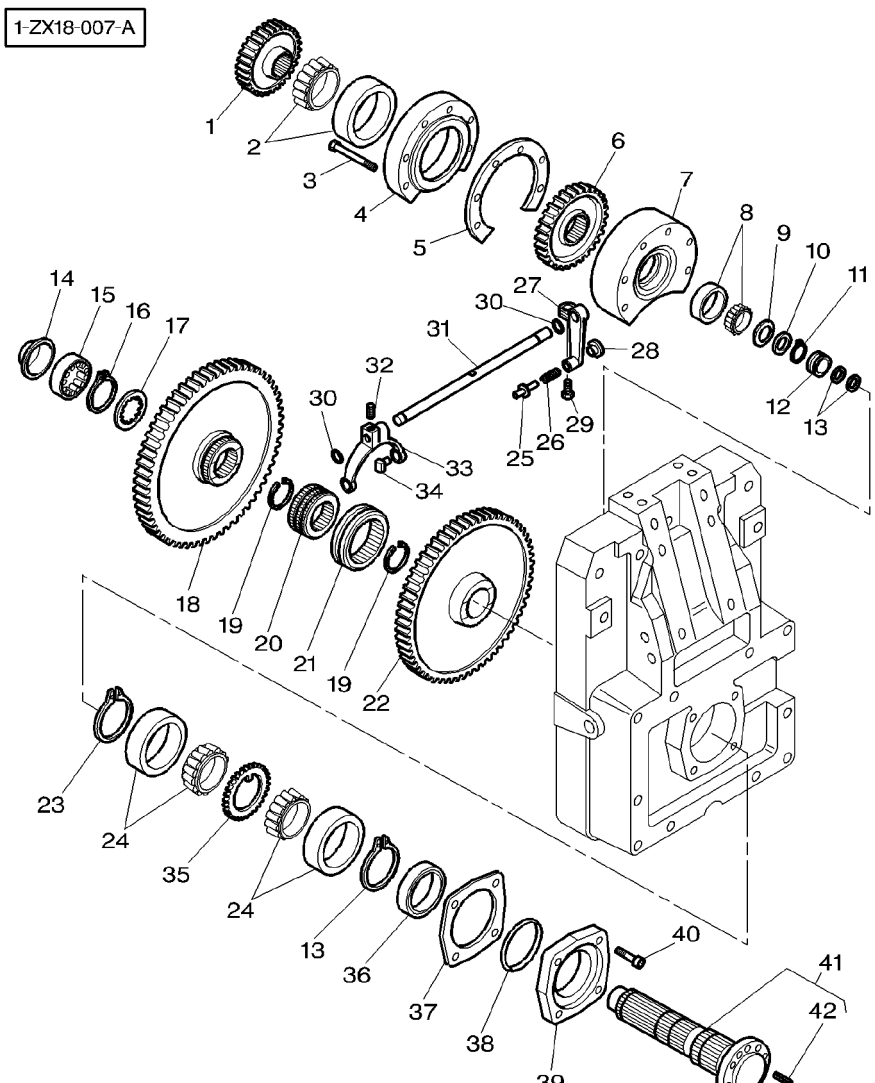

1	3716288M1	29 540 RPM	**1**	PINION	PIGNON PIGNONE	RITZEL PINON
1	3716005M1	37 750 RPM	**1**	PINION	PIGNON PIGNONE	RITZEL PINON
2	968634M91		**1**	BEARING ASSY	ROULEMENT CUSCINETTO COMPL	RADIALLAGER RODAMIENTO RAD
3	339488X1	M10x85	**6**	BOLT METRIC	BOULON METRIQUE BULLONE METRICO	MASCH.SCHRB MET PERNO METRICO
4	3716002M2		**1**	BEARING CARRIER	PALIER CUSCINETTO SUPP-	LAGER-GEHAEUSE TEJUELO
5	3716037M1	0,1 MM	**X**	CHOCK	CALE PASSACAVO	UNTERLEG-KEIL CALZA
5	3716038M1	0,4 MM	**X**	CHOCK	CALE PASSACAVO	UNTERLEG-KEIL CALZA
6	3716006M1	44 1000 RPM	**1**	PINION	PIGNON PIGNONE	RITZEL PINON
7	3716003M2		**1**	CASE ASSY	BOITIER CARCASSA COMPLET	GEHAEUSE KPL CAJA COMPLETA
8	3009853X1		**1**	BEARING TAPER	ROULEMNT CONIQUE CUSCINETTO CONIC	KEGELLAGER RODAMIENTO CONI
9	3716007M1		**1**	WASHER	RONDELLE RONDELLA	UNTERLEGSCHEIBE ARANDELA
10	3716028M1		**1**	WASHER	RONDELLE RONDELLA	UNTERLEGSCHEIBE ARANDELA
11	3010624X1		**1**	RING	ANNEAU ANELLO	RING ARO
12	3382868M1		**1**	BUSH	BAGUE BOCCOLA	BUCHSE CASQUILLO
13	**3382874M1**		**2**	SEGMENT	SEGMENT SEGMENTO	SEGMENT SEGMENTO
14	3716024M1		**1**	DEFLECTOR	DEFLECTEUR DEFLETTORE	ABWEISBLECH DEFLECTOR
15	**1612707M1**		**1**	BEARING ASSY	ROULEMENT CUSCINETTO COMPL	RADIALLAGER RODAMIENTO RAD
16	391129X1		**1**	CIRCLIP	SEGMENT D ARRET ANELLO D'ARRESTO	SICHERUNGSRING CIRCULITO
17	3716027M2		**1**	WASHER	RONDELLE RONDELLA	UNTERLEGSCHEIBE ARANDELA
18	3716290M12	107 540 RPM	**1**	PINION	PIGNON PIGNONE	RITZEL PINON
18	3716009M13	99 750 RPM	**1**	PINION	PIGNON PIGNONE	RITZEL PINON
19	3010555X1		**2**	RING	ANNEAU ANELLO	RING ARO
20	3716025M2		**1**	HUB	MOYEU MOZZO	NABE CUBO
21	**3382069M2**		**1**	SLIDER BEARING	COULISSEAU CUSCINETTO GUIDA	GLEITLAGER COJINETE DESPLAZ
22	3716012M12	92 1000 RPM	**1**	PINION	PIGNON PIGNONE	RITZEL PINON
23	3010554X1		**2**	CIRCLIP	SEGMENT D ARRET ANELLO D'ARRESTO	SICHERUNGSRING CIRCULITO

Pto Shaft
Arbre De Prise De Force
Zapfwelle
Albero Presa Di Forza
Eje Toma De Fuerza

50-40

Throttle Control
Commandes Manuelles
Drossel Steuerung
Commandi A Mano
Mandos Accelerador Manual

1-ZX18-007-A

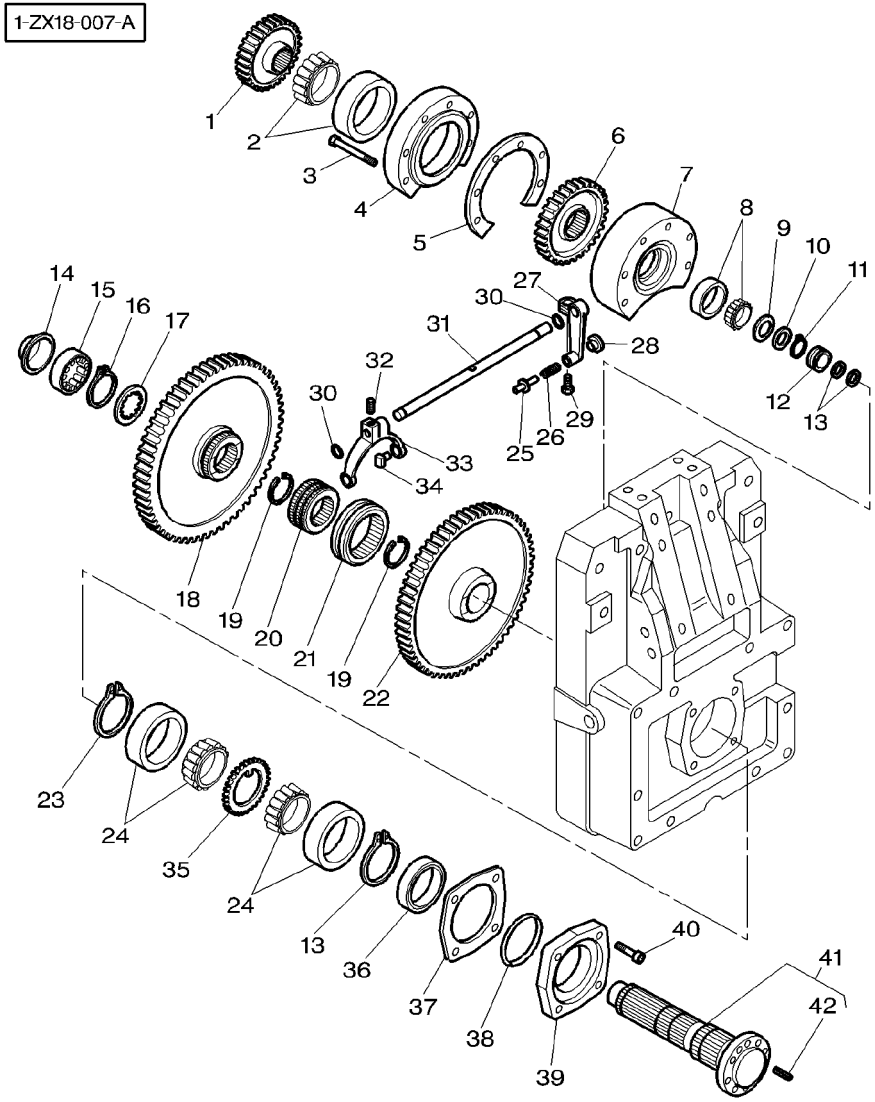

24	968634M91			**2**	BEARING ASSY	ROULEMENT	RADIALLAGER
						CUSCINETTO COMPL	RODAMIENTO RAD
25	3383009M1			**1**	CLEVIS PIN	AXE	SPLINTBOLZEN
						PERNO D'ATTACCO	BULON CILINDRICO
26	1426515M1			**1**	SPRING	RESSORT	FEDER
						MOLLA	MUELLE
27	3581440M1			**1**	LEVER	LEVIER	HEBEL
						LEVA	PALANCA
28	973052M1			**1**	KNOB	POMMEAU	KNOPF
						POMELLO	POMO
29	1440350X1	M6		**1**	SCREW METRIC	VIS METRIQUE	SCHRAUBE METR
						VITE METRICA	TORNILLO METRICO
30	195868M1			**2**	O RING	JOINT TORIQUE	O-RING
						ANELLO OR	JUNTA TORICA
31	3716049M1			**1**	STEM	TIGE	STIEL
						STELO	VASTAGO
32	3382979M1	M8x20		**1**	SCREW SPECIAL	VIS SPECIALE	SPEZIALSCHRAUBE
						VITE SPECIALE	TORNILLO ESPEC.
33	3382971M1			**1**	FORK	FOURCHETTE	GABEL
						FORCA	HORQUILLA
34	3382972M2			**2**	SKATE	PATIN	SCHLITTEN-KUFE
						PATTINO	PATIN
35	3716014M2			**1**	SPACER	ENTRETOISE	ABSTANDSTUECK
						DISTANZIALE	PIEZA DISTANCIA
36	3716017M1			**1**	GASKET	JOINT	DICHTSCHEIBE
						GUARNIZIONE	EMPAQUETADURA.
37	3716053M1	⧗ 0,1 MM		**X**	CHOCK	CALE	UNTERLEG-KEIL
						PASSACAVO	CALZA
37	3716054M1	⧗ 0,4 MM		**X**	CHOCK	CALE	UNTERLEG-KEIL
						PASSACAVO	CALZA
38	152623M1			**1**	O RING	JOINT TORIQUE	O-RING
						ANELLO OR	JUNTA TORICA
39	3716022M1			**1**	HUB	MOYEU	NABE
						MOZZO	CUBO
40	3009292X1	M10x25		**4**	SCREW	VIS	SCHRAUBE
						VITE	TORNILLO
41	3716057M13			**1**	SHAFT	ARBRE	WELLE
						ALBERO	ARBOL
42	3006290X1	41 ∅ 10 MM		**1**	CENTRALISER	PION	FUEHRUNGSKORB
		◀▶ 30 MM				CENTRALIZZATORE	CENTRALIZADOR

Pto Shaft
Arbre De Prise De Force
Zapfwelle
Albero Presa Di Forza
Eje Toma De Fuerza

50-45

Cable Control
Commande Par Cable
Lenkkabel
Commando Per Cavo
Mando Per Cable

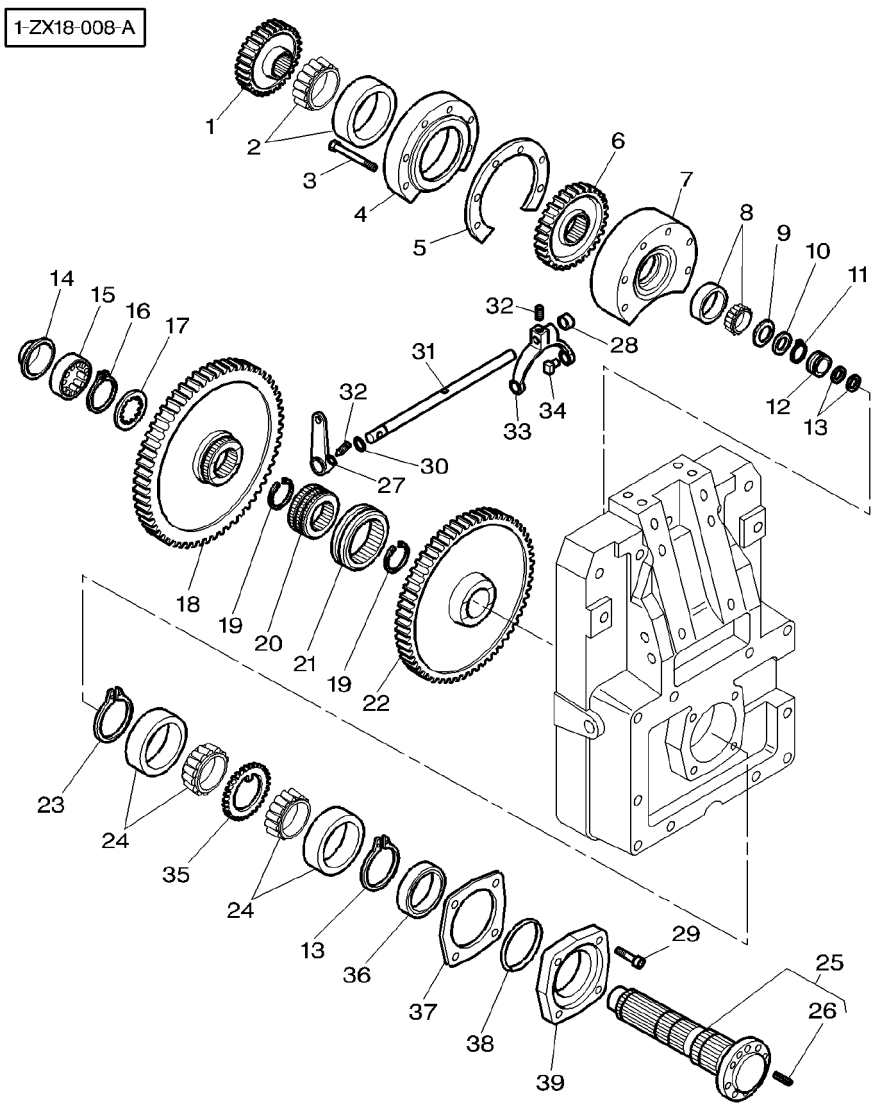

1	3716288M1	29 540 RPM	1	PINION	PIGNON PIGNONE	RITZEL PINON
1	3716005M1	37 750 RPM	1	PINION	PIGNON PIGNONE	RITZEL PINON
2	968634M91		1	BEARING ASSY	ROULEMENT CUSCINETTO COMPL	RADIALLAGER RODAMIENTO RAD
3	339488X1	M10x85	6	BOLT METRIC	BOULON METRIQUE BULLONE METRICO	MASCH.SCHRB MET PERNO METRICO
4	3716002M2		1	BEARING CARRIER	PALIER CUSCINETTO SUPP-	LAGER-GEHAEUSE TEJUELO
5	3716037M1	0,1 MM	X	CHOCK	CALE PASSACAVO	UNTERLEG-KEIL CALZA
5	3716038M1	0,4 MM	X	CHOCK	CALE PASSACAVO	UNTERLEG-KEIL CALZA
6	3716006M1	44 1000 RPM	1	PINION	PIGNON PIGNONE	RITZEL PINON
7	3716003M2		1	CASE ASSY	BOITIER CARCASSA COMPLET	GEHAEUSE KPL CAJA COMPLETA
8	3009853X1		1	BEARING TAPER	ROULEMNT CONIQUE CUSCINETTO CONIC	KEGELLAGER RODAMIENTO CONI
9	3716007M1		1	WASHER	RONDELLE RONDELLA	UNTERLEGSCHEIBE ARANDELA
10	3716028M1		1	WASHER	RONDELLE RONDELLA	UNTERLEGSCHEIBE ARANDELA
11	3010624X1		1	RING	ANNEAU ANELLO	RING ARO
12	3382868M1		1	BUSH	BAGUE BOCCOLA	BUCHSE CASQUILLO
13	**3382874M1**		2	SEGMENT	SEGMENT SEGMENTO	SEGMENT SEGMENTO
14	3716024M1		1	DEFLECTOR	DEFLECTEUR DEFLETTORE	ABWEISBLECH DEFLECTOR
15	**1612707M1**		1	BEARING ASSY	ROULEMENT CUSCINETTO COMPL	RADIALLAGER RODAMIENTO RAD
16	391129X1		1	CIRCLIP	SEGMENT D ARRET ANELLO D'ARRESTO	SICHERUNGSRING CIRCULITO
17	3716027M2		1	WASHER	RONDELLE RONDELLA	UNTERLEGSCHEIBE ARANDELA
18	3716290M12	107 540 RPM	1	PINION	PIGNON PIGNONE	RITZEL PINON
18	3716009M13	99 750 RPM	1	PINION	PIGNON PIGNONE	RITZEL PINON
19	3010555X1		2	RING	ANNEAU ANELLO	RING ARO
20	3716025M2		1	HUB	MOYEU MOZZO	NABE CUBO
21	**3382069M2**		1	SLIDER BEARING	COULISSEAU CUSCINETTO GUIDA	GLEITLAGER COJINETE DESPLAZ
22	3716012M12	92 1000 RPM	1	PINION	PIGNON PIGNONE	RITZEL PINON
23	3010554X1		2	CIRCLIP	SEGMENT D ARRET ANELLO D'ARRESTO	SICHERUNGSRING CIRCULITO

Pto Shaft
Arbre De Prise De Force
Zapfwelle
Albero Presa Di Forza
Eje Toma De Fuerza

50-45

Cable Control
Commande Par Cable
Lenkkabel
Commando Per Cavo
Mando Per Cable

1-ZX18-008-A

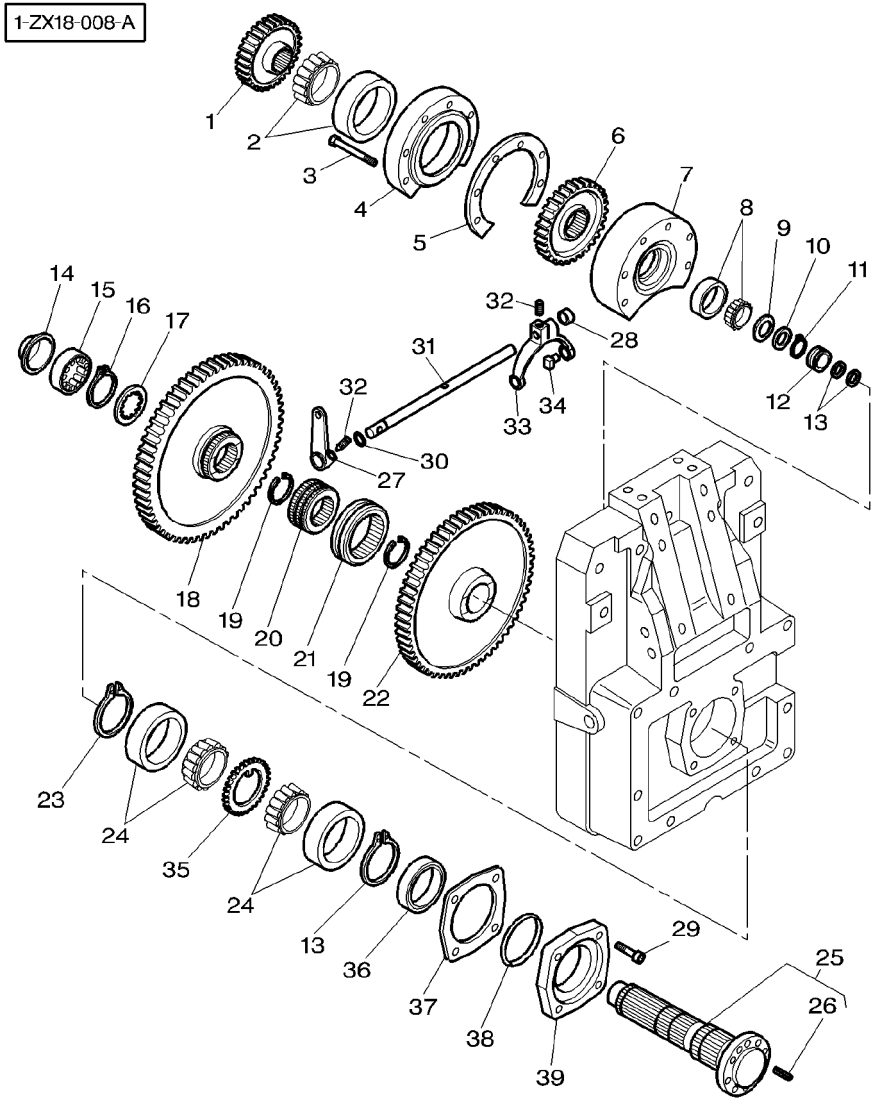

24	968634M91		**2**	BEARING ASSY	ROULEMENT CUSCINETTO COMPL	RADIALLAGER RODAMIENTO RAD
25	3716057M13		**1**	SHAFT	ARBRE ALBERO	WELLE ARBOL
26	3006290X1	25 ∅ 10 MM ◀▶ 30 MM	**1**	CENTRALISER	PION CENTRALIZZATORE	FUEHRUNGSKORB CENTRALIZADOR
27	3389580M2		**1**	LEVER	LEVIER LEVA	HEBEL PALANCA
28	391563X1		**1**	PLUG	BOUCHON TAPPO	VERSCHL.STOPFEN TAPON
29	3009292X1	M10x25	**4**	SCREW	VIS VITE	SCHRAUBE TORNILLO
30	195868M1		**1**	O RING	JOINT TORIQUE ANELLO OR	O-RING JUNTA TORICA
31	3791859M1		**1**	STEM	TIGE STELO	STIEL VASTAGO
32	3382979M1	M8x20	**2**	SCREW SPECIAL	VIS SPECIALE VITE SPECIALE	SPEZIALSCHRAUBE TORNILLO ESPEC.
33	3382971M1		**1**	FORK	FOURCHETTE FORCA	GABEL HORQUILLA
34	3382972M2		**2**	SKATE	PATIN PATTINO	SCHLITTEN-KUFE PATIN
35	3716014M2		**1**	SPACER	ENTRETOISE DISTANZIALE	ABSTANDSTUECK PIEZA DISTANCIA
36	3716017M1		**1**	GASKET	JOINT GUARNIZIONE	DICHTSCHEIBE EMPAQUETADURA.
37	3716053M1	⧗ 0,1 MM	**X**	CHOCK	CALE PASSACAVO	UNTERLEG-KEIL CALZA
37	3716054M1	⧗ 0,4 MM	**X**	CHOCK	CALE PASSACAVO	UNTERLEG-KEIL CALZA
38	152623M1		**1**	O RING	JOINT TORIQUE ANELLO OR	O-RING JUNTA TORICA
39	3716022M1		**1**	HUB	MOYEU MOZZO	NABE CUBO

Pto−Coupling Drive Mechanism
Transmission Prise De Force Crabotable
Zapfwellenkupplung−Antrieb
Meccanismo Accoppiamento Pto
Tdf − Mecanismo De Mando De Acople

50-50

Pto Control 540/1000 Rpm
Commande Pto 540/1000 Tr/Mn
Zapfw Antr Mech 540/1000tr/Mn
Comando Pto 540/1000 Tr/Mn
Mando Pto 540/1000 Tr/Mn

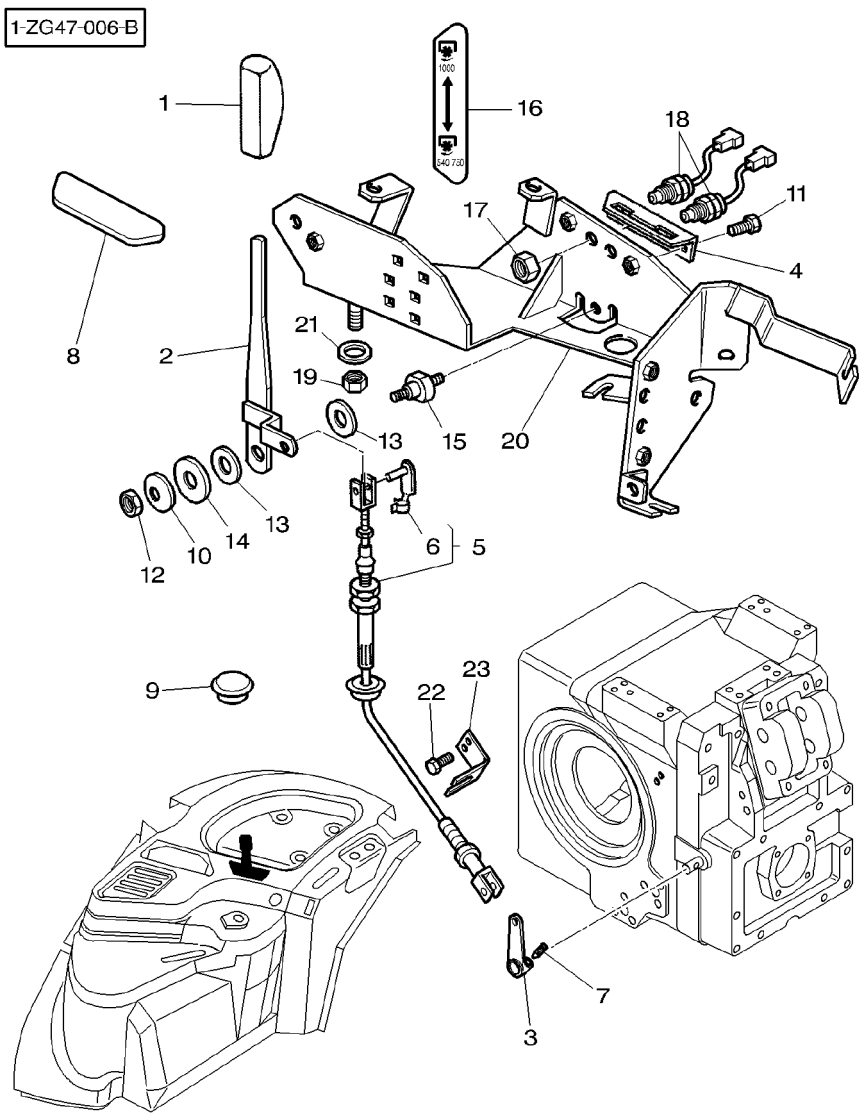

1	3712976M2		1	HANDLE	POIGNEE MANIGLIA	HANDGRIFF MANETA
2	3712282M3		1	LEVER	LEVIER LEVA	HEBEL PALANCA
3	3389580M2	M16X50	1	LEVER	LEVIER LEVA	HEBEL PALANCA
4	3715489M3		1	GRILLE	GRILLE GRIGLIA	GRILL REJILLA
5	3715483M1		1	CABLE	CABLE CAVO	KABEL CABLE
6	3600190M1	5 ◄► 28MM	1	CLEVIS PIN	AXE PERNO D'ATTACCO	SPLINTBOLZEN BULON CILINDRICO
6	3600191M1	5 ◄► 40MM	1	CLEVIS PIN	AXE PERNO D'ATTACCO	SPLINTBOLZEN BULON CILINDRICO
7	3382979M1		1	SCREW SPECIAL	VIS SPECIALE VITE SPECIALE	SPEZIALSCHRAUBE TORNILLO ESPEC.
8	3712984M1		X	PLATE	PLAQUE PIASTRA	PLATTE PLATO
9	3715587M1	∅ 22MM	1	DECAL	DECALCOMANIE DECALCOMANIA	AUFKLEBER CALCOMANIA
10	3386192M1		1	WASHER	RONDELLE RONDELLA	UNTERLEGSCHEIBE ARANDELA
11	339228X1	M8X12	2	SCREW METRIC	VIS METRIQUE VITE METRICA	SCHRAUBE METR TORNILLO METRICO
12	1441461X1		2	NUT METRIC	ECROU METRIQUE DADO METRICO	MUTTER METRISCH TUERCA METRICO
13	3386166M1		2	WASHER	RONDELLE RONDELLA	UNTERLEGSCHEIBE ARANDELA
14	1442174X1		1	WASHER	RONDELLE RONDELLA	UNTERLEGSCHEIBE ARANDELA
15	3712277M1		1	CLEVIS PIN	AXE PERNO D'ATTACCO	SPLINTBOLZEN BULON CILINDRICO
16	3715185M2		1	DECAL	DECALCOMANIE DECALCOMANIA	AUFKLEBER CALCOMANIA
17	3386198M1		2	NUT SPECIAL	ECROU SPECIAL DADO SPECIALE	SPEZIALMUTTER TUERCA ESPECIAL
18	***3780581M1***		2	SWITCH,INDIRECT	CONTACTEUR INTERRUTTORE IND	KONTAKTSCHALTER CONTACTOR
19	1441461X1		4	NUT METRIC	ECROU METRIQUE DADO METRICO	MUTTER METRISCH TUERCA METRICO
20	3778480M91		1	SUPPORT	SUPPORT SUPPORTO	LAGERUNG DISPOS.DE SOSTEN
21	385361X1		4	WASHER METRIC	RONDELLE METR. RONDELLA METRICO	SCHEIBE METRISCH ARANDELA METRICO
22	391989X1	M8X20	2	SCREW METRIC	VIS METRIQUE VITE METRICA	SCHRAUBE METR TORNILLO METRICO
23	3791860M1		1	THRUSTER	ARRETOIR SPINGITORE	DRUCKRING PROPULSOR

Pto−Proportional Drive Mechanism
Transmission Prise De Force Proportionnelle
Feineinstellung Zapfw.−Antrieb
Meccanismo Pto Proporzionale
Tdf − Mecanismo De Mando Proporcional

50-55

Cable Control
Commande Par Cable
Lenkkabel
Commando Per Cavo
Mando Para Cable

1-ZG49-004-B

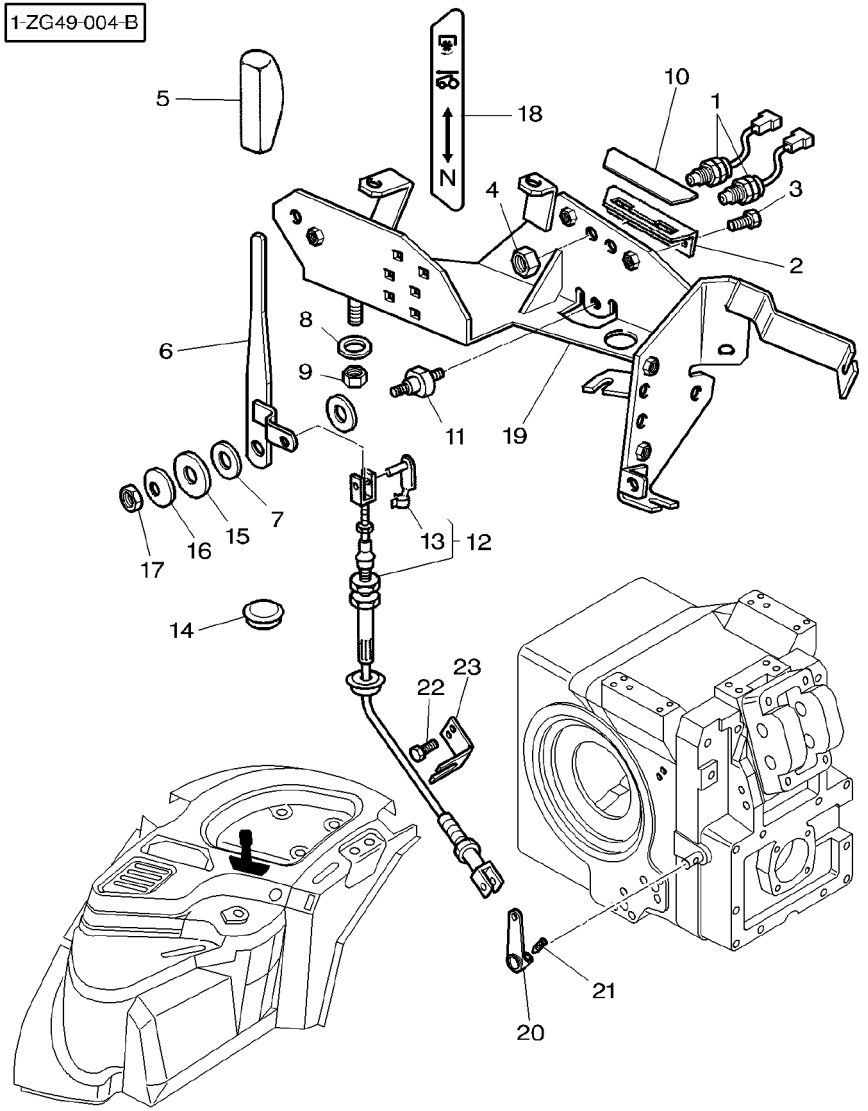

1	***3780581M1***		**2**	SWITCH,INDIRECT	CONTACTEUR INTERRUTTORE IND	KONTAKTSCHALTER CONTACTOR
2	3712275M1		**1**	GRILLE	GRILLE GRIGLIA	GRILL REJILLA
3	339228X1	M8X12	**2**	SCREW METRIC	VIS METRIQUE VITE METRICA	SCHRAUBE METR TORNILLO METRICO
4	3386198M1		**2**	NUT SPECIAL	ECROU SPECIAL DADO SPECIALE	SPEZIALMUTTER TUERCA ESPECIAL
5	3712976M2		**1**	HANDLE	POIGNEE MANIGLIA	HANDGRIFF MANETA
6	3712282M3		**1**	LEVER	LEVIER LEVA	HEBEL PALANCA
7	3386166M1		**2**	WASHER	RONDELLE RONDELLA	UNTERLEGSCHEIBE ARANDELA
8	385361X1		**4**	WASHER METRIC	RONDELLE METR. RONDELLA METRICO	SCHEIBE METRISCH ARANDELA METRICO
9	1441461X1		**4**	NUT METRIC	ECROU METRIQUE DADO METRICO	MUTTER METRISCH TUERCA METRICO
10	3712984M1		**1**	PLATE	PLAQUE PIASTRA	PLATTE PLATO
11	3712277M1		**1**	CLEVIS PIN	AXE PERNO D'ATTACCO	SPLINTBOLZEN BULON CILINDRICO
12	3715483M1		**1**	CABLE	CABLE CAVO	KABEL CABLE
13	3600190M1	12 ◄► 28MM	**1**	CLEVIS PIN	AXE PERNO D'ATTACCO	SPLINTBOLZEN BULON CILINDRICO
13	3600191M1	12 ◄► 40MM	**1**	CLEVIS PIN	AXE PERNO D'ATTACCO	SPLINTBOLZEN BULON CILINDRICO
14	3713587M1		**1**	PLUG	BOUCHON TAPPO	VERSCHL.STOPFEN TAPON
15	1442174X1		**1**	WASHER	RONDELLE RONDELLA	UNTERLEGSCHEIBE ARANDELA
16	3386192M1		**1**	WASHER	RONDELLE RONDELLA	UNTERLEGSCHEIBE ARANDELA
17	1441461X1		**1**	NUT METRIC	ECROU METRIQUE DADO METRICO	MUTTER METRISCH TUERCA METRICO
18	3780175M1		**1**	DECAL	DECALCOMANIE DECALCOMANIA	AUFKLEBER CALCOMANIA
19	3778480M91		**1**	SUPPORT	SUPPORT SUPPORTO	LAGERUNG DISPOS.DE SOSTEN
20	3389580M2		**1**	LEVER	LEVIER LEVA	HEBEL PALANCA
21	3382979M1		**1**	SCREW SPECIAL	VIS SPECIALE VITE SPECIALE	SPEZIALSCHRAUBE TORNILLO ESPEC.
22	391989X1	M8X20	**2**	SCREW METRIC	VIS METRIQUE VITE METRICA	SCHRAUBE METR TORNILLO METRICO
23	3791860M1		**1**	THRUSTER	ARRETOIR SPINGITORE	DRUCKRING PROPULSOR

Pto−Drive Mechanism	Platform
Transmission Prise De Force	Plateforme
Zapfwellenantrieb	Plattform
Meccanismo Presa Di Forza	Piattaforma
Mecanismo Accionamiento Toma De Fuerza	Plataforma

50-60

1-ZG65-002-A

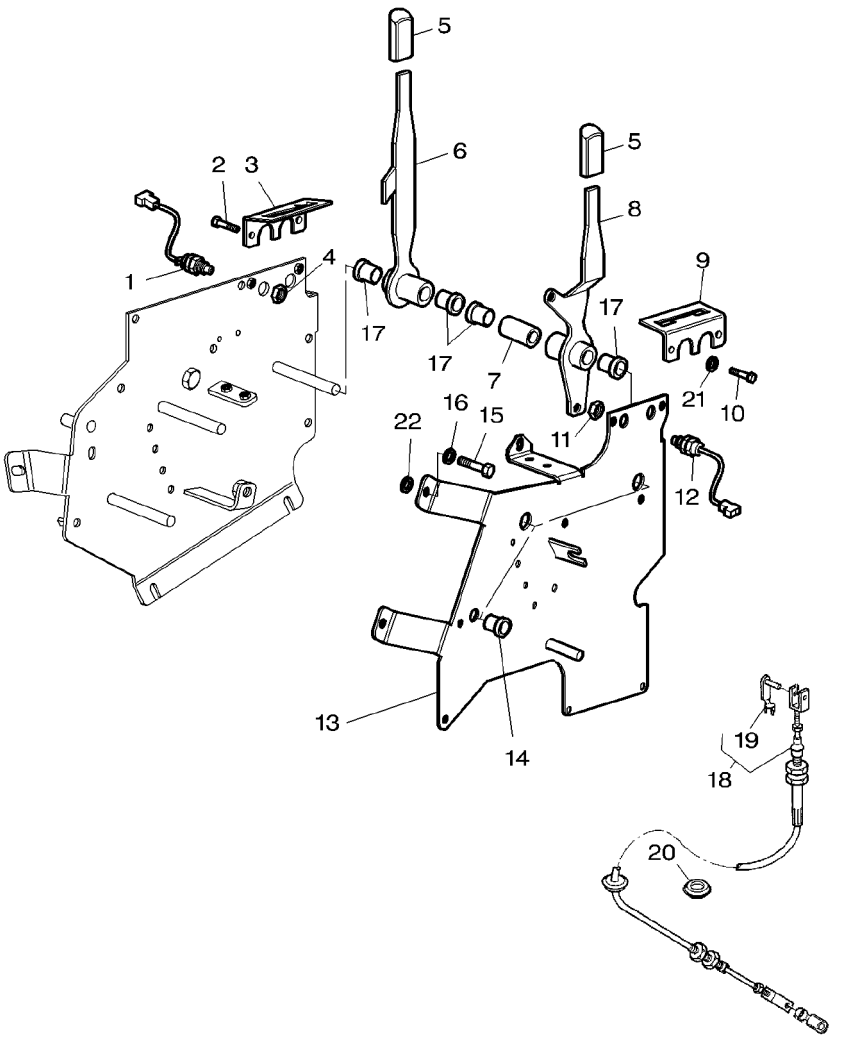

1	***3780581M1***		X	SWITCH,INDIRECT	CONTACTEUR INTERRUTTORE IND	KONTAKTSCHALTER CONTACTOR
2	339560X1	M6X16MM	2	SCREW METRIC	VIS METRIQUE VITE METRICA	SCHRAUBE METR TORNILLO METRICO
3	3778409M1		1	GRILLE	GRILLE GRIGLIA	GRILL REJILLA
4	3386198M1		2	NUT SPECIAL	ECROU SPECIAL DADO SPECIALE	SPEZIALMUTTER TUERCA ESPECIAL
5	3712976M2		2	HANDLE	POIGNEE MANIGLIA	HANDGRIFF MANETA
6	3778405M2		1	LEVER	LEVIER LEVA	HEBEL PALANCA
7	3778412M1	[A]	1	TUBE	TUBE TUBO	ROHR TUBO
8	3778406M2		1	LEVER	LEVIER LEVA	HEBEL PALANCA
9	3778410M1		1	GRILLE	GRILLE GRIGLIA	GRILL REJILLA
10	339560X1		2	SCREW METRIC	VIS METRIQUE VITE METRICA	SCHRAUBE METR TORNILLO METRICO
11	3386198M1		1	NUT SPECIAL	ECROU SPECIAL DADO SPECIALE	SPEZIALMUTTER TUERCA ESPECIAL
12	***3780581M1***	⇔ 3386171M1	1	SWITCH,INDIRECT	CONTACTEUR INTERRUTTORE IND	KONTAKTSCHALTER CONTACTOR
13	3778408M4		1	SHIELD	TOLE RIPARO	SCHILD BLINDAJE
14	3778415M1		3	BEARING	COUSSINET CUSCINETTO	LAGER COJINETE
15	339123X1	M8X20MM	6	SCREW METRIC	VIS METRIQUE VITE METRICA	SCHRAUBE METR TORNILLO METRICO
16	390972X1		6	WASHER METRIC	RONDELLE METR. RONDELLA METRICO	SCHEIBE METRISCH ARANDELA METRICO
17	3778411M1		4	BUSH	BAGUE BOCCOLA	BUCHSE CASQUILLO
18	3712989M2		1	CABLE	CABLE CAVO	KABEL CABLE
19	3600190M1	18 ◀▶ 28MM	1	CLEVIS PIN	AXE PERNO D'ATTACCO	SPLINTBOLZEN BULON CILINDRICO
19	3600191M1	18 ◀▶ 40MM	1	CLEVIS PIN	AXE PERNO D'ATTACCO	SPLINTBOLZEN BULON CILINDRICO
20	3713587M1	∅ 22MM	1	PLUG	BOUCHON TAPPO	VERSCHL.STOPFEN TAPON
21	390971X1		2	WASHER METRIC	RONDELLE METR. RONDELLA METRICO	SCHEIBE METRISCH ARANDELA METRICO
22	385361X1		4	WASHER METRIC	RONDELLE METR. RONDELLA METRICO	SCHEIBE METRISCH ARANDELA METRICO

[A] WITHOUT CREEPER GEAR
SANS REDUCTEUR DE VITESSE RAMPANTE
OHNE KRIECHGANGUEBERSETZUNG
SENZA RIDUTTORE PER LENTA VELOCITA
SIN REDUCTORE DE CAMBIO

Pto Shaft
Arbre De Prise De Force
Zapfwelle
Albero Presa Di Forza
Eje Toma De Fuerza

50-65

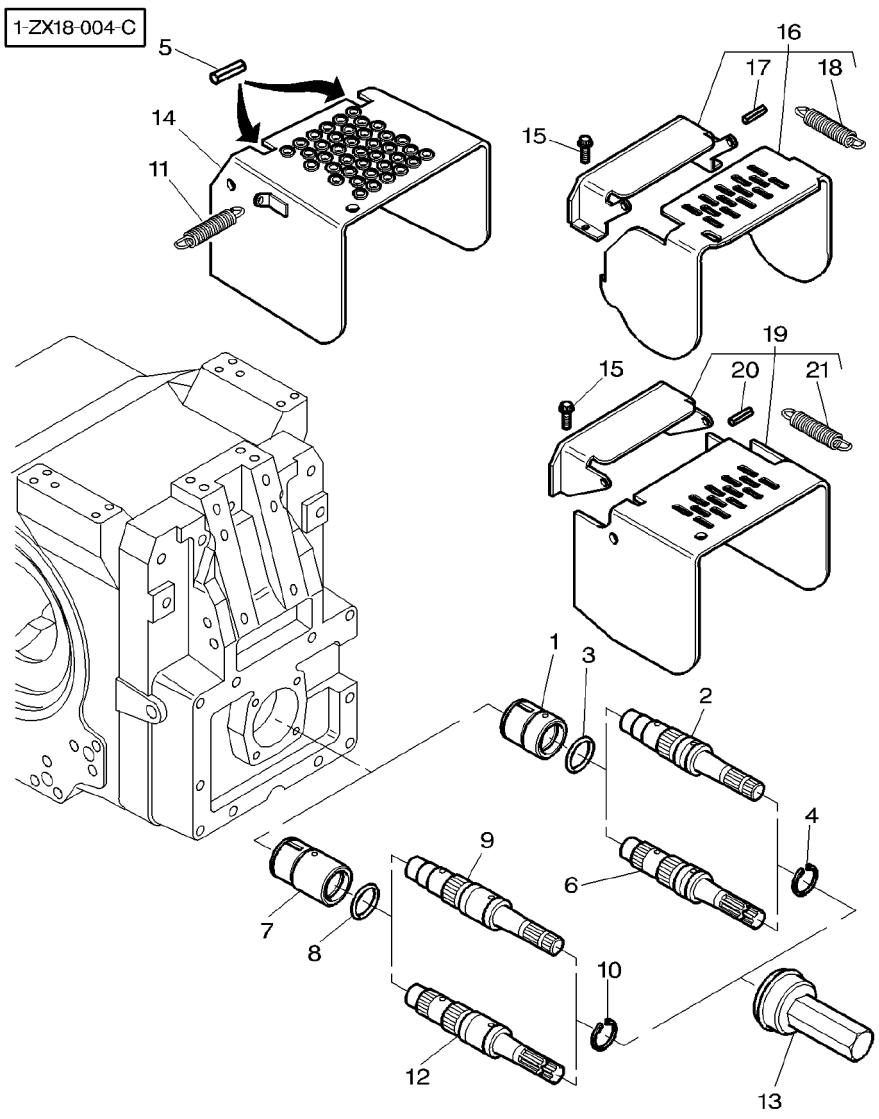

1	3716029M2	[A]	**1** HUB	MOYEU MOZZO	NABE CUBO
2	3716043M3	[A] 21 / ISO ∅ 1"3/8−34,9 MM ◀▶ 368,8 MM 1000 RPM	**1** SHAFT	ARBRE ALBERO	WELLE ARBOL
3	1610254M1		**1** O RING	JOINT TORIQUE ANELLO OR	O−RING JUNTA TORICA
4	3322250M3		**1** CLIP	CLIP FERMAGLIO	SCHELLE CRAPA RETEN
5	3019541X1	∅ 8 MM ◀▶ 22 MM	**2** ROLL PIN	GOUPILLE ROULEE SPINA ELASTICA	SPANNHUELSE PASADOR ELASTICO
6	3716045M4	6 / ISO ∅ 1"3/8−34,9MM ◀▶ 368,8MM 540 RPM	**1** SHAFT	ARBRE ALBERO	WELLE ARBOL
7	3716075M2	[B]	**1** HUB	MOYEU MOZZO	NABE CUBO
8	1610254M1		**1** O RING	JOINT TORIQUE ANELLO OR	O−RING JUNTA TORICA
9	3716070M2	[B] 21 / SAE ∅ 1"3/8−34,9 MM ◀▶ 408,8 MM 1000 RPM	**1** PTO SHAFT	ARBRE PTO PTO ALBERO	PTO GELWELLE EJE TDF
10	3322250M3		**1** CLIP	CLIP FERMAGLIO	SCHELLE CRAPA RETEN
11	3716643M1	◀▶ 85 MM	**1** SPRING	RESSORT MOLLA	FEDER MUELLE
11	3618683M1	[C] ◀▶ 118 MM	**1** SPRING	RESSORT MOLLA	FEDER MUELLE
12	3716068M3	[B] 6 / SAE ∅ 1"3/8−34,9 MM ◀▶ 408,8 MM 540 RPM	**1** SHAFT	ARBRE ALBERO	WELLE ARBOL
13	3716071M1	◀▶ 206MM	**1** PROTECTOR	PROTECTEUR PROTETTORE	SCHUTZ PROTECTOR
13	3716021M1	◀▶ 166MM	**1** PROTECTOR	PROTECTEUR PROTETTORE	SCHUTZ PROTECTOR
14	3716693M92	[B] CAT . 3	**1** PROTECTOR	PROTECTEUR PROTETTORE	SCHUTZ PROTECTOR
14	3716696M91	[BD] CAT . 2	**1** PROTECTOR	PROTECTEUR PROTETTORE	SCHUTZ PROTECTOR
14	3716640M91	[A]	**1** PROTECTOR	PROTECTEUR PROTETTORE	SCHUTZ PROTECTOR
15	3010917X1	M20X30	**2** SCREW METRIC	VIS METRIQUE VITE METRICA	SCHRAUBE METR TORNILLO METRICO

Pto Shaft
Arbre De Prise De Force
Zapfwelle
Albero Presa Di Forza
Eje Toma De Fuerza

50-65

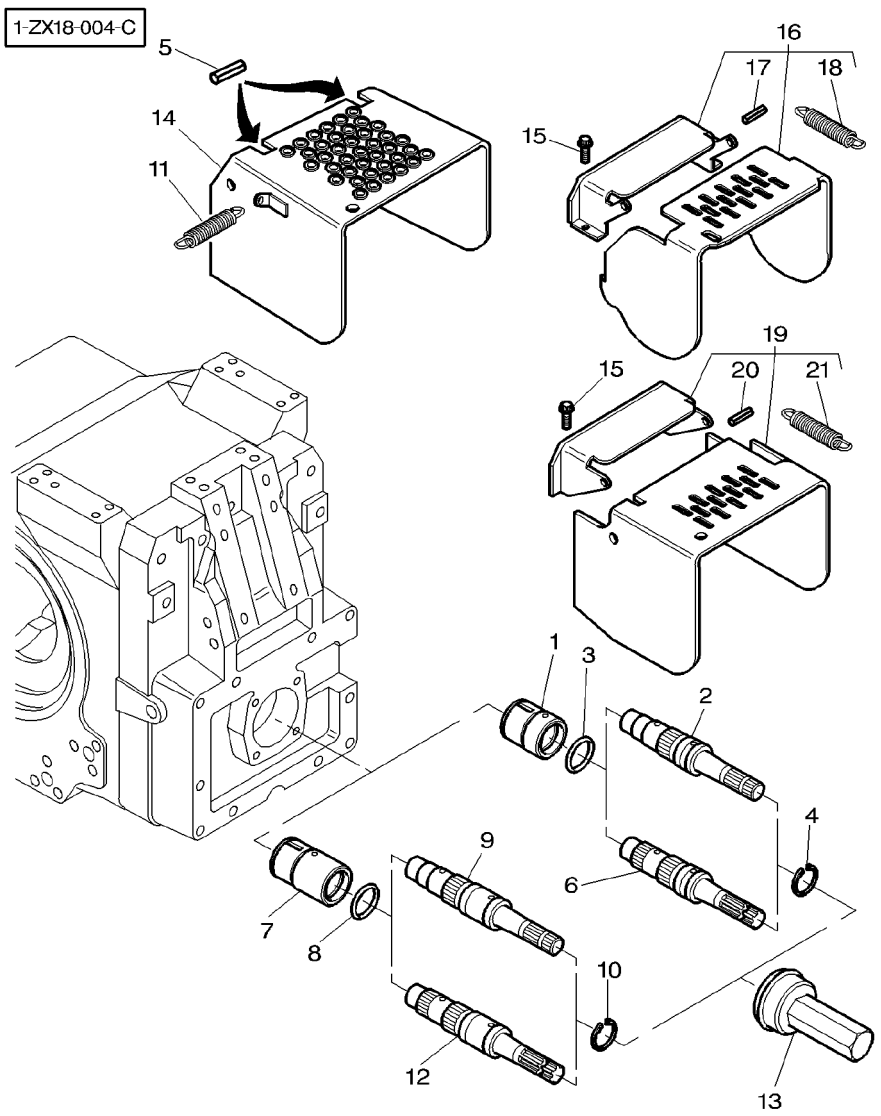

16	3792679M91	[A] ➡ H151014 CAT . 2/3	**1**	PROTECTOR	PROTECTEUR PROTETTORE	SCHUTZ PROTECTOR
17	3792837M1	16	**2**	PIN	GOUPILLE PERNO	BOLZEN PASADOR
18	3792838M1	16	**1**	SPRING	RESSORT MOLLA	FEDER MUELLE
19	3793135M91	[A] ➡ H151015 CAT . 2/3	**1**	PROTECTOR	PROTECTEUR PROTETTORE	SCHUTZ PROTECTOR
20	3002169X1	19	**2**	PIN	GOUPILLE PERNO	BOLZEN PASADOR
21	3793246M1	19	**1**	SPRING	RESSORT MOLLA	FEDER MUELLE

[A] ISO STANDARD
NORME ISO
ISO NORMUNG
UNIFICAZIONE ISO
NORMALIZACION ISO

[B] SAE STANDARD
NORME SAE
SAE NORMUNG
UNIFICAZIONE SAE
NORMALIZACION SAE

[C] LESS STABILISERS
SANS STABILISATEURS
SCHLEPPER OHNE STABILISIERUNGS
SENZA STABILIZZATORE
IN ESTABILIZADOR

[D] WITH SHOE STABILIZERS
AVEC STABILISATEURS A SABOTS
MIT STABILISATORSCHUH
CON STABILIZZATORES A SUOLA
CON ESTABILIZADORES ZAPATA

Pto Shaft
Arbre De Prise De Force
Zapfwelle
Albero Presa Di Forza
Eje Toma De Fuerza

50-70

1-ZX18-005-C

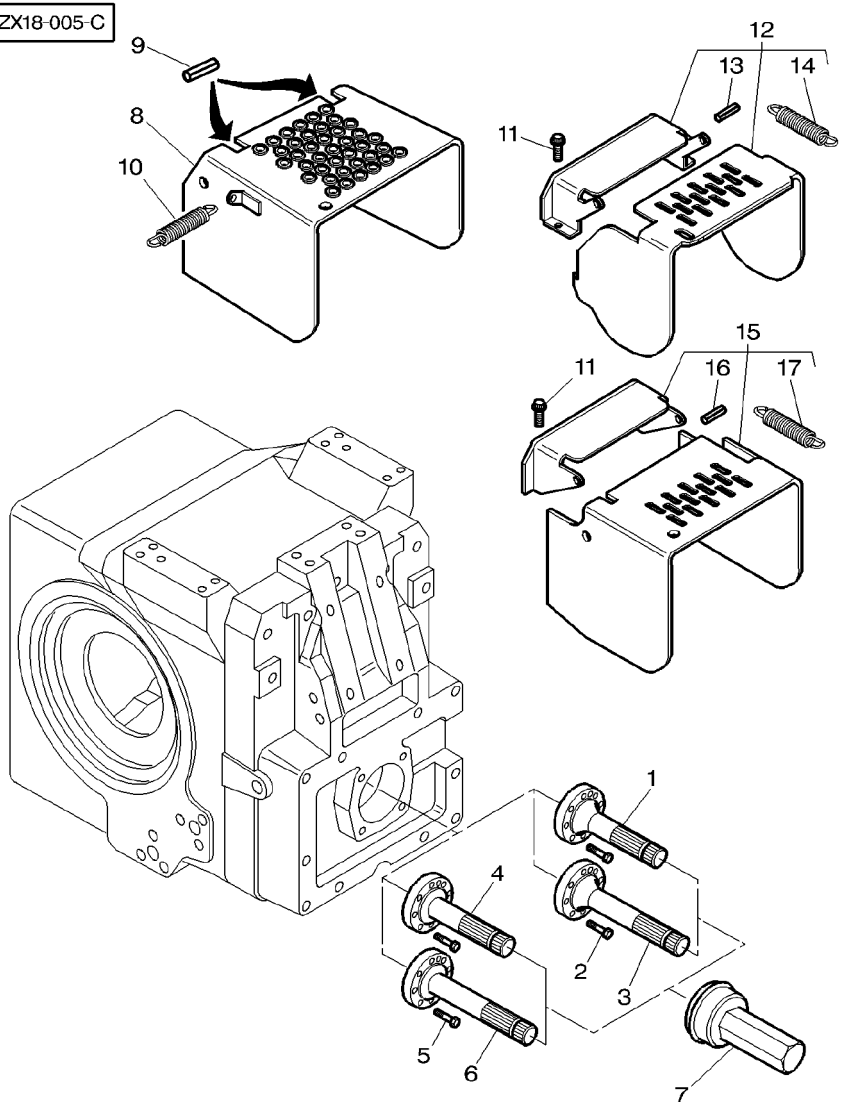

1	3716016M1	21 / ISO ∅ 1"3/8−34,9 MM ◀▶ 137,45 MM 1000 RPM	**1**	SHAFT	ARBRE ALBERO	WELLE ARBOL
1	3716018M1	6 ∅ 1"3/8−34,9MM ◀▶ 137,45MM 540 RPM	**1**	SHAFT	ARBRE ALBERO	WELLE ARBOL
2	3010800X1	M12x35	**8**	SCREW	VIS VITE	SCHRAUBE TORNILLO
3	3716074M1	21 / ISO ∅ 1"3/8−34,9 MM ◀▶ 177,45 MM 1000 RPM	**1**	SHAFT	ARBRE ALBERO	WELLE ARBOL
3	3716072M1	6 / SAE ∅ 1" 3/8 34,9 MM ◀▶ 177,45 MM 540 RPM	**1**	SHAFT	ARBRE ALBERO	WELLE ARBOL
4	3716019M1	20 / ISO ∅ 1"3/4−44,2 MM ◀▶ 137,45 MM 1000 RPM	**1**	SHAFT	ARBRE ALBERO	WELLE ARBOL
5	3010800X1	M12x35	**8**	SCREW	VIS VITE	SCHRAUBE TORNILLO
6	3716073M1	20 / SAE ∅ 1"3/4−44,2 MM ◀▶ 177,45 MM 1000 RPM	**1**	SHAFT	ARBRE ALBERO	WELLE ARBOL
7	3716071M1	◀▶ 206MM	**1**	PROTECTOR	PROTECTEUR PROTETTORE	SCHUTZ PROTECTOR
7	3716021M1	◀▶ 166MM	**1**	PROTECTOR	PROTECTEUR PROTETTORE	SCHUTZ PROTECTOR
8	3716693M92	[D] CAT . 3	**1**	PROTECTOR	PROTECTEUR PROTETTORE	SCHUTZ PROTECTOR
8	3716696M91	[DB] CAT . 2	**1**	PROTECTOR	PROTECTEUR PROTETTORE	SCHUTZ PROTECTOR
8	3716640M91	[C]	**1**	PROTECTOR	PROTECTEUR PROTETTORE	SCHUTZ PROTECTOR
9	3019541X1	∅ 8 MM ◀▶ 22 MM	**2**	ROLL PIN	GOUPILLE ROULEE SPINA ELASTICA	SPANNHUELSE PASADOR ELASTICO
10	3716643M1	◀▶ 85MM	**1**	SPRING	RESSORT MOLLA	FEDER MUELLE
10	3618683M1	[A] ◀▶ 118MM	**1**	SPRING	RESSORT MOLLA	FEDER MUELLE
11	3010917X1	M20X30	**2**	SCREW METRIC	VIS METRIQUE VITE METRICA	SCHRAUBE METR TORNILLO METRICO
12	3792679M91	[C] ➡| H151014 CAT . 2/3	**1**	PROTECTOR	PROTECTEUR PROTETTORE	SCHUTZ PROTECTOR
13	3792837M1	12	**2**	PIN	GOUPILLE PERNO	BOLZEN PASADOR

Pto Shaft
Arbre De Prise De Force
Zapfwelle
Albero Presa Di Forza
Eje Toma De Fuerza

50-70

1-ZX18-005-C

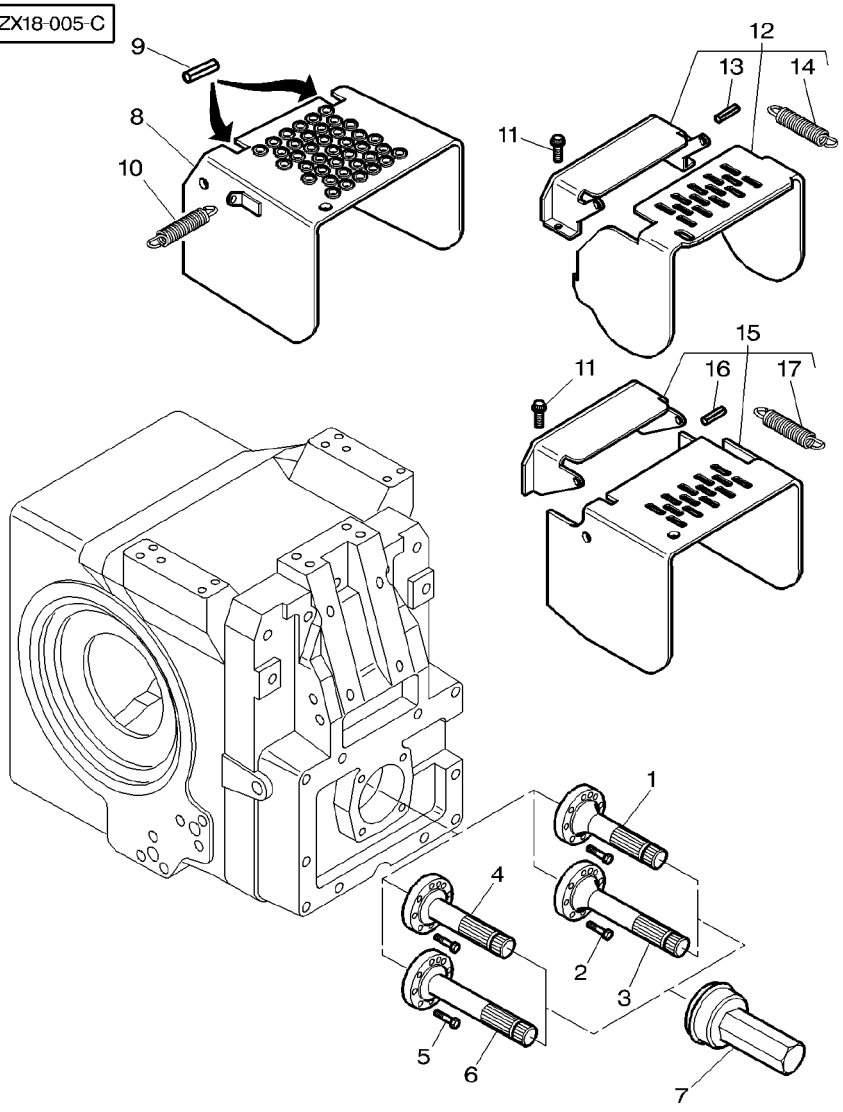

14	3792838M1	12		**1**	SPRING	RESSORT MOLLA	FEDER MUELLE
15	3793135M91	[C] ➡ H151015 CAT . 2/3		**1**	PROTECTOR	PROTECTEUR PROTETTORE	SCHUTZ PROTECTOR
16	3002169X1	15		**2**	PIN	GOUPILLE PERNO	BOLZEN PASADOR
17	3793246M1	15		**1**	SPRING	RESSORT MOLLA	FEDER MUELLE

[A] LESS STABILISERS
SANS STABILISATEURS
SCHLEPPER OHNE STABILISIERUNGS
SENZA STABILIZZATORE
IN ESTABILIZADOR

[B] WITH SHOE STABILIZERS
AVEC STABILISATEURS A SABOTS
MIT STABILISATORSCHUH
CON STABILIZZATORES A SUOLA
CON ESTABILIZADORES ZAPATA

[C] ISO STANDARD
NORME ISO
ISO NORMUNG
UNIFICAZIONE ISO
NORMALIZACION ISO

[D] SAE STANDARD
NORME SAE
SAE NORMUNG
UNIFICAZIONE SAE
NORMALIZACION SAE

Front Pto Prise De Force Avant Frontzapfwelle Pto Anteriore Tdf Delantera	Housing Carter Gehaeuse Scatola Caja	**50-75**	**Reverse Drive Front Pto** **Avec Prise De Force Avant Sens Inverse** **Mit Frontzapfwelle Umkerbarer Drehsinn** **Con Presa Di Potenza Frontale Sinistro** **Con Toma De Fuerza Delantera A Izquiedas**

1-ZX39-005-B

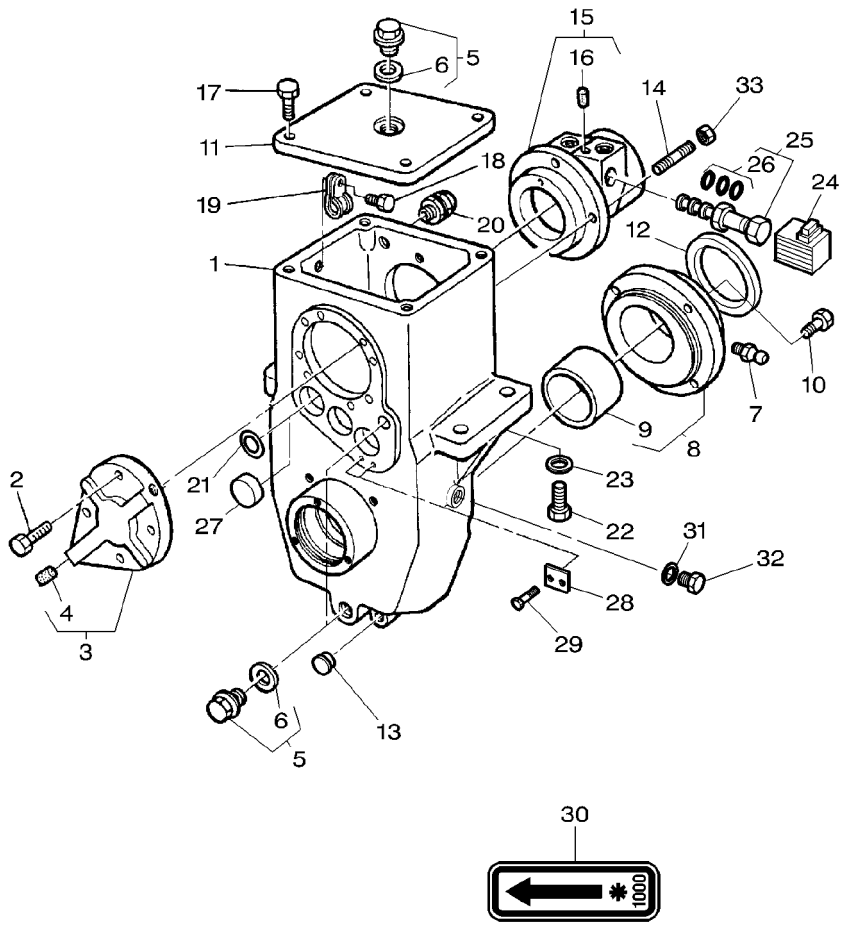

1	3615609M2		**1**	CASE ASSY	BOITIER CARCASSA COMPLET	GEHAEUSE KPL CAJA COMPLETA
2	339761X1	M8X25	**4**	SCREW METRIC	VIS METRIQUE VITE METRICA	SCHRAUBE METR TORNILLO METRICO
3	3581124M11		**1**	COVER	COUVERCLE COPERCHIO	DECKEL CUBIERTA
4	3581130M1	3	**1**	PLUG	BOUCHON TAPPO	VERSCHL.STOPFEN TAPON
5	3583994M91	M18	**3**	PLUG	BOUCHON TAPPO	VERSCHL.STOPFEN TAPON
6	3019397X1	5	**3**	O RING	JOINT TORIQUE ANELLO OR	O-RING JUNTA TORICA
7	339608X1		**1**	GREASE NIPPLE	GRAISSEUR DROIT INGRASSAT.	FETT-NIPPEL ENGRASADOR
8	3389342M93		**1**	BEARING CARRIER	PALIER CUSCINETTO SUPP-	LAGER-GEHAEUSE TEJUELO
9	3712078M1	8	**1**	BEARING	COUSSINET CUSCINETTO	LAGER COJINETE
10	339299X1	M12X30	**4**	SCREW METRIC	VIS METRIQUE VITE METRICA	SCHRAUBE METR TORNILLO METRICO
11	3389345M3		**1**	COVER	COUVERCLE COPERCHIO	DECKEL CUBIERTA
12	3712081M1	∅ 134MM	**1**	CUP	COUPELLE SCODELLINO	LAUFRING CUBETA
13	3615257M1	∅ 9,5MM	**1**	EYELET	OEILLET OCCHIELLO METALL	OEHR OJAL
14	3386903M1	M8X32	**2**	STUD	GOUJON PRIGIONIERO	STEHBOLZEN ESPARRAGO
15	3581116M11		**1**	BEARING CARRIER	PALIER CUSCINETTO SUPP-	LAGER-GEHAEUSE TEJUELO
16	3388063M1	15 ∅ 6MM	**1**	PLUG	BOUCHON TAPPO	VERSCHL.STOPFEN TAPON
17	339761X1	M8X25	**4**	SCREW METRIC	VIS METRIQUE VITE METRICA	SCHRAUBE METR TORNILLO METRICO
18	391074X1	M6X12	**1**	SCREW METRIC	VIS METRIQUE VITE METRICA	SCHRAUBE METR TORNILLO METRICO
19	3581132M1	∅ 15MM	**1**	CLAMP	COLLIER FASCETTA	HALTESCHELLE ABRAZADERA
20	3389615M1		**1**	GLAND	PRESSE ETOUPE GHIANDOLA	STOPFBUCHSE PRENSAESTOPA
21	195562M1		**2**	O RING	JOINT TORIQUE ANELLO OR	O-RING JUNTA TORICA
22	3386216M1	M20X60	**4**	SCREW	VIS VITE	SCHRAUBE TORNILLO
23	385365X1		**4**	WASHER	RONDELLE RONDELLA	UNTERLEGSCHEIBE ARANDELA
24	**3619764M1**	1 [A]	**1**	SOLENOID	SOLENOIDE SOLENOIDE	MAGNETSPULE SOLENOIDE
25	***3619762M1***		**1**	SPOOL	TIROIR ROCCHETTO	STEUERSCHIEBER CARRETE
26	3900994M91	25	**1**	KIT, JOINT	JEU JOINTS KIT GIUNTO	DICHTUNGSSATZ JUEGO JUNTAS

Front Pto Prise De Force Avant Frontzapfwelle Pto Anteriore Tdf Delantera	Housing Carter Gehaeuse Scatola Caja	50-75	Reverse Drive Front Pto Avec Prise De Force Avant Sens Inverse Mit Frontzapfwelle Umkerbarer Drehsinn Con Presa Di Potenza Frontale Sinistro Con Toma De Fuerza Delantera A Izquiedas

1-ZX39-005-B

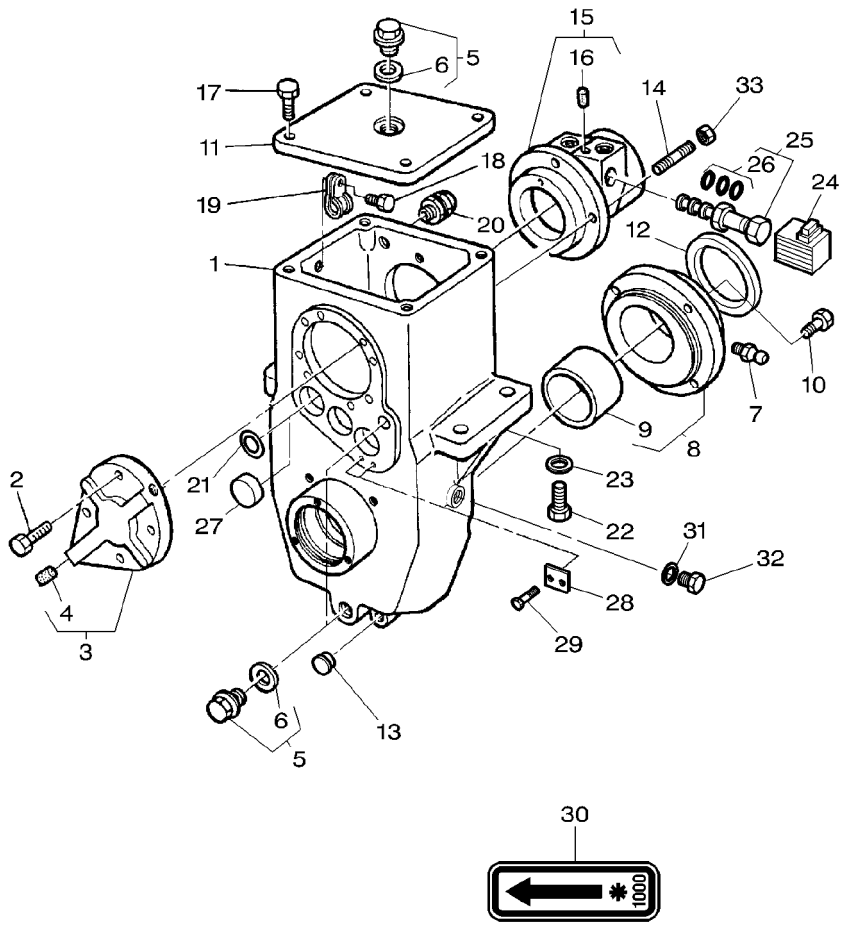

27	3713445M1	∅ 36MM	**1**	PLUG	BOUCHON TAPPO	VERSCHL.STOPFEN TAPON
28	3615604M1		**1**	STOP	BUTEE STOP	ANSCHLAG PARO
29	339123X1	M8X20	**2**	SCREW METRIC	VIS METRIQUE VITE METRICA	SCHRAUBE METR TORNILLO METRICO
30	3618157M2		**1**	DECAL	DECALCOMANIE DECALCOMANIA	AUFKLEBER CALCOMANIA
31	390202X1	[B]	**1**	SEAL	JOINT ETANCHEITE PARAOLIO	DICHTRING RETEN
32	339494X1	[B] M20	**1**	PLUG	BOUCHON TAPPO	VERSCHL.STOPFEN TAPON
33	339169X1		**2**	NUT METRIC	ECROU METRIQUE DADO METRICO	MUTTER METRISCH TUERCA METRICO

[A] INCLUDING A DIODE
INCLUANT UNE DIODE
DIODE EINGESCHLOSSEN
ACCLUDO A DIODO
INCLUDE E DIODO

[B] WITHOUT SENSOR
SANS CAPTEUR
OHNE SENSOR
SENZA SENSORE
SIN SENSOR

Front Pto	Housing
Prise De Force Avant	Carter
Frontzapfwelle	Gehaeuse
Pto Anteriore	Scatola
Tdf Delantera	Caja

50-80

Clock Wise Drive Front Pto
Avec Prise De Force Avant Sens Horaire
Mit Frontzapfwelle Im Uhrzeigersinn
Con Presa Di Potenza Frontale Senso Orario
Con Toma De Fuerza Delantera Sentido Horario

1-ZX39-006-B

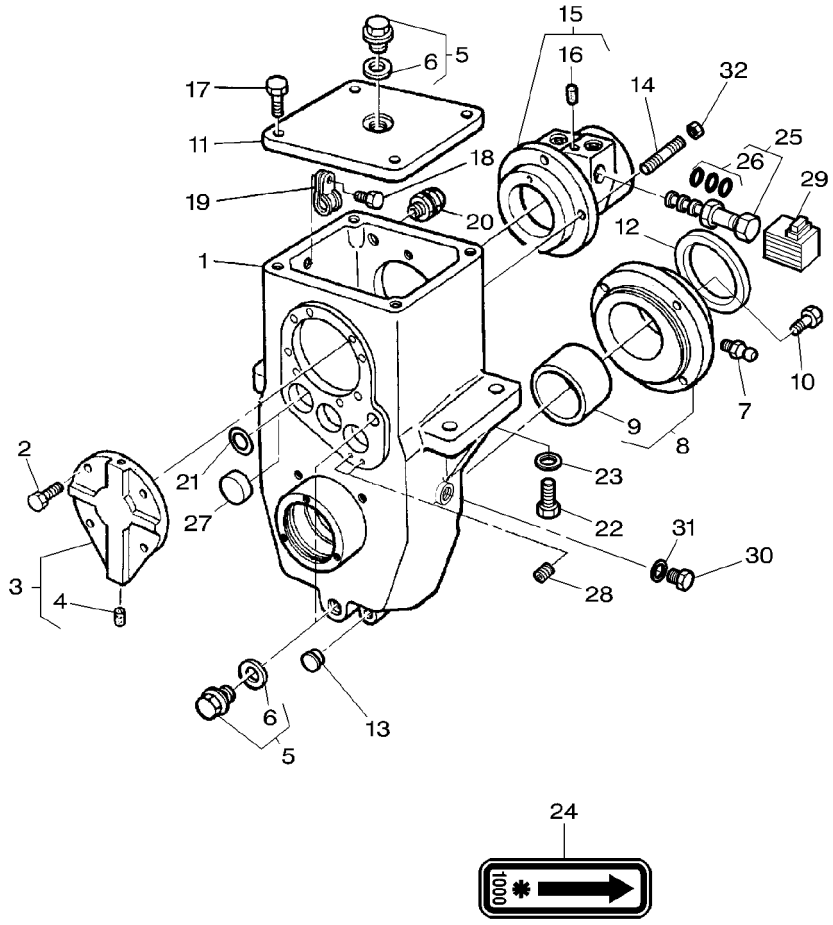

1	3615609M2		1	CASE ASSY	BOITIER CARCASSA COMPLET	GEHAEUSE KPL CAJA COMPLETA
2	339761X1	M8X25	4	SCREW METRIC	VIS METRIQUE VITE METRICA	SCHRAUBE METR TORNILLO METRICO
3	3581124M11		1	COVER	COUVERCLE COPERCHIO	DECKEL CUBIERTA
4	3581130M1	3	1	PLUG	BOUCHON TAPPO	VERSCHL.STOPFEN TAPON
5	3583994M91	M18	3	PLUG	BOUCHON TAPPO	VERSCHL.STOPFEN TAPON
6	3019397X1	5	3	O RING	JOINT TORIQUE ANELLO OR	O-RING JUNTA TORICA
7	339608X1		1	GREASE NIPPLE	GRAISSEUR DROIT INGRASSAT.	FETT-NIPPEL ENGRASADOR
8	3389342M93		1	BEARING CARRIER	PALIER CUSCINETTO SUPP-	LAGER-GEHAEUSE TEJUELO
9	3712078M1	8	1	BEARING	COUSSINET CUSCINETTO	LAGER COJINETE
10	339299X1	M12X30	4	SCREW METRIC	VIS METRIQUE VITE METRICA	SCHRAUBE METR TORNILLO METRICO
11	3389345M3		1	COVER	COUVERCLE COPERCHIO	DECKEL CUBIERTA
12	3712081M1	∅ 134MM	1	CUP	COUPELLE SCODELLINO	LAUFRING CUBETA
13	3615257M1	∅ 9,5MM	1	EYELET	OEILLET OCCHIELLO METALL	OEHR OJAL
14	3386903M1	M8X32	2	STUD	GOUJON PRIGIONIERO	STEHBOLZEN ESPARRAGO
15	3581116M11		1	BEARING CARRIER	PALIER CUSCINETTO SUPP-	LAGER-GEHAEUSE TEJUELO
16	3388063M1	15 ∅ 6MM	1	PLUG	BOUCHON TAPPO	VERSCHL.STOPFEN TAPON
17	339761X1	M8X25	4	SCREW METRIC	VIS METRIQUE VITE METRICA	SCHRAUBE METR TORNILLO METRICO
18	391074X1	M6X12	1	SCREW METRIC	VIS METRIQUE VITE METRICA	SCHRAUBE METR TORNILLO METRICO
19	3581132M1	∅ 15MM	1	CLAMP	COLLIER FASCETTA	HALTESCHELLE ABRAZADERA
20	3389615M1		1	GLAND	PRESSE ETOUPE GHIANDOLA	STOPFBUCHSE PRENSAESTOPA
21	195562M1		1	O RING	JOINT TORIQUE ANELLO OR	O-RING JUNTA TORICA
22	3386216M1	M20X60	4	SCREW	VIS VITE	SCHRAUBE TORNILLO
23	385365X1		4	WASHER	RONDELLE RONDELLA	UNTERLEGSCHEIBE ARANDELA
24	3618157M2		1	DECAL	DECALCOMANIE DECALCOMANIA	AUFKLEBER CALCOMANIA
25	***3619762M1***		1	SPOOL	TIROIR ROCCHETTO	STEUERSCHIEBER CARRETE
26	3900994M91	25	1	KIT, JOINT	JEU JOINTS KIT GIUNTO	DICHTUNGSSATZ JUEGO JUNTAS

Front Pto Prise De Force Avant Frontzapfwelle Pto Anteriore Tdf Delantera	Housing Carter Gehaeuse Scatola Caja	50-80	Clock Wise Drive Front Pto Avec Prise De Force Avant Sens Horaire Mit Frontzapfwelle Im Uhrzeigersinn Con Presa Di Potenza Frontale Senso Orario Con Toma De Fuerza Delantera Sentido Horario

1-ZX39-006-B

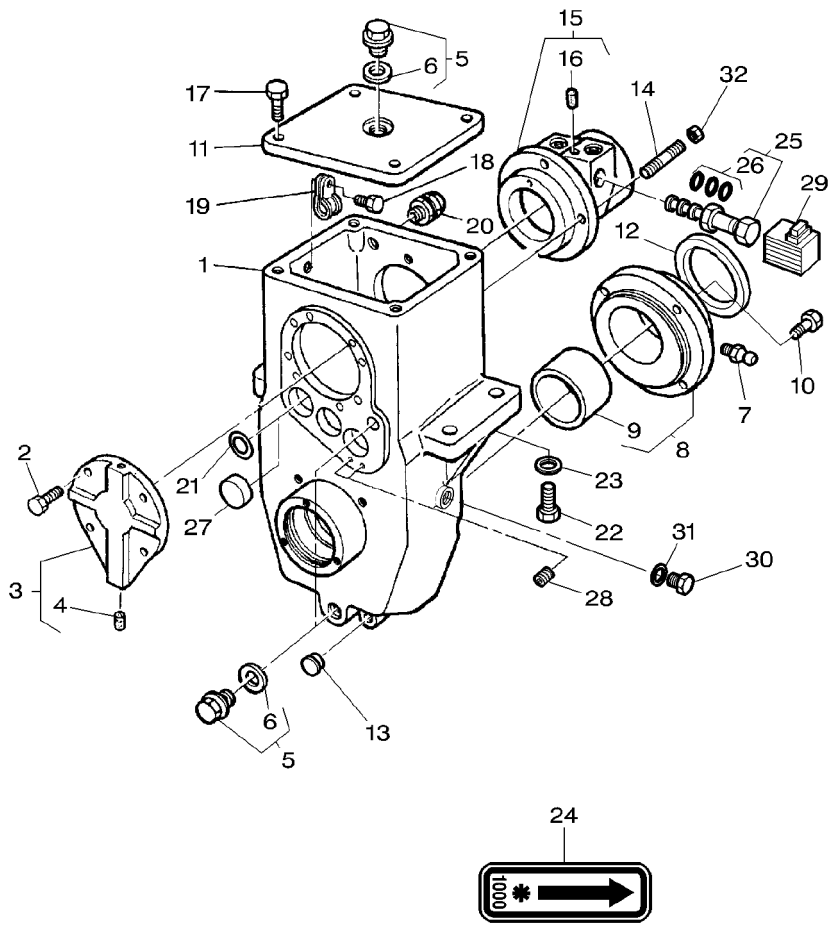

27	3713445M1	∅ 36MM		**2**	PLUG	BOUCHON TAPPO	VERSCHL.STOPFEN TAPON
28	3009711X1			**2**	SCREW	VIS VITE	SCHRAUBE TORNILLO
29	**3619764M1**	1 [A]		**1**	SOLENOID	SOLENOIDE SOLENOIDE	MAGNETSPULE SOLENOIDE
30	339494X1	[B] M20		**1**	PLUG	BOUCHON TAPPO	VERSCHL.STOPFEN TAPON
31	390202X1	[B]		**1**	SEAL	JOINT ETANCHEITE PARAOLIO	DICHTRING RETEN
32	339169X1			**2**	NUT METRIC	ECROU METRIQUE DADO METRICO	MUTTER METRISCH TUERCA METRICO

[A] INCLUDING A DIODE
INCLUANT UNE DIODE
DIODE EINGESCHLOSSEN
ACCLUDO A DIODO
INCLUDE E DIODO

[B] WITHOUT SENSOR
SANS CAPTEUR
OHNE SENSOR
SENZA SENSORE
SIN SENSOR

Front Pto	Drive
Prise De Force Avant	Transmission
Frontzapfwelle	Antrieb
Pto Anteriore	Presa Moto
Tdf Delantera	Mando

50-85

Clock Wise Drive Or Reverse Drive
Sens Horaire Ou Sens Inverse
Mit Frontzapfwelle Im Uhrzeigersinn Oder Umkerbare R Drehsinn
Con Presa Di Potenza Frontale Senso Orario O Sinis Troso
Con Toma De Fuerza Delantera Sentido Horario O Ezq Quidas

1-ZX38-002-A

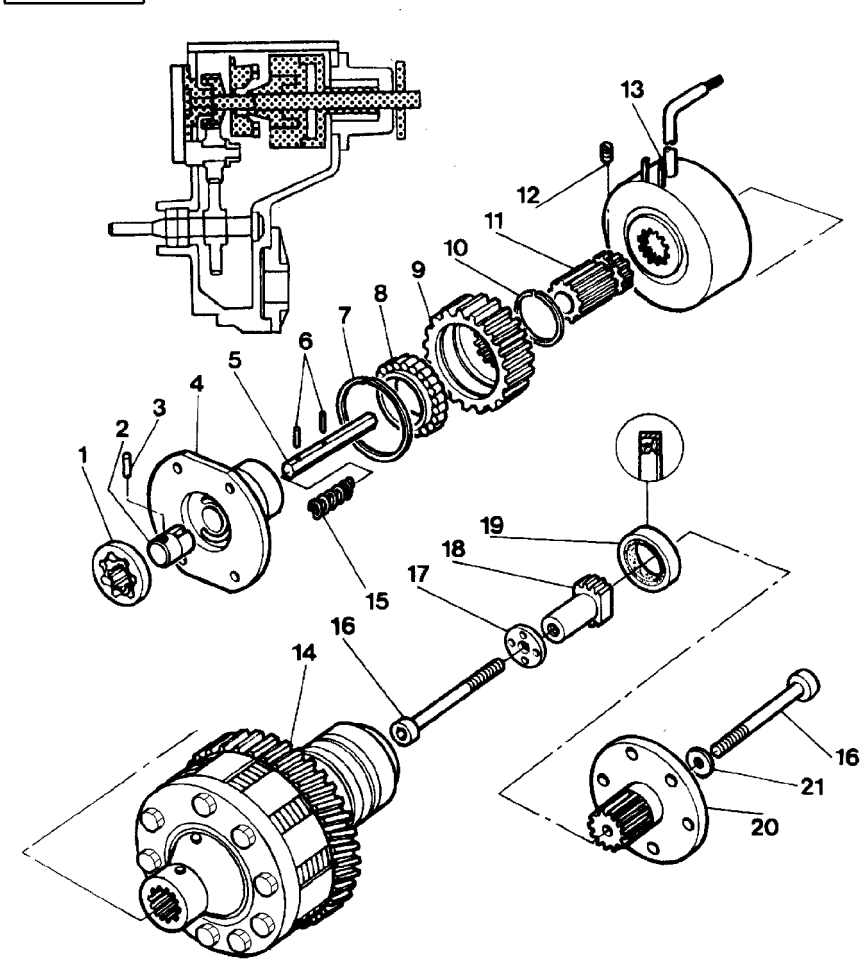

1	274797M1		1	ROTOR	ROTOR ROTORE	ROTOR ROTOR
2	3389604M1		1	HUB	MOYEU MOZZO	NABE CUBO
3	338334X1	∅ 3X20MM	1	PIN	GOUPILLE PERNO	BOLZEN PASADOR
4	3615601M1		1	HUB CARRIER	SUPPORT MOYEU PORTA MOZZO	NABENTRAEGER SOPORTE DE CUBO
5	3617323M1		1	CLEVIS PIN	AXE PERNO D'ATTACCO	SPLINTBOLZEN BULON CILINDRICO
6	3010612X1		2	NEEDLE	AIGUILLE AGO	NADEL AGUJA
7	1442502X1		1	CIRCLIP	SEGMENT D ARRET ANELLO D'ARRESTO	SICHERUNGSRING CIRCULITO
8	3580985M1		1	BEARING ASSY	ROULEMENT CUSCINETTO COMPL	RADIALLAGER RODAMIENTO RAD
9	3389332M2	25	1	PINION	PIGNON PIGNONE	RITZEL PINON
10	3389610M1	0,25 MM	X	CHOCK	CALE PASSACAVO	UNTERLEG-KEIL CALZA
10	3389611M1	0,50 MM	X	CHOCK	CALE PASSACAVO	UNTERLEG-KEIL CALZA
10	3389612M1	1 MM	X	CHOCK	CALE PASSACAVO	UNTERLEG-KEIL CALZA
11	3389347M2		1	SHAFT	ARBRE ALBERO	WELLE ARBOL
12	3009711X1	M8X12	1	SCREW	VIS VITE	SCHRAUBE TORNILLO
13	3389631M91		1	BRAKE	FREIN FRENO	BREMSE FRENO
14	3714535M13		1	CLUTCH	EMBRAYAGE FRIZIONE	SCHALTKUPPLUNG EMBRAGUE
15	3389605M1		1	SPRING	RESSORT MOLLA	FEDER MUELLE
16	3389349M1	M8X90	2	SCREW SPECIAL	VIS SPECIALE VITE SPECIALE	SPEZIALSCHRAUBE TORNILLO ESPEC.
17	3389603M1		1	WASHER	RONDELLE RONDELLA	UNTERLEGSCHEIBE ARANDELA
18	3617321M1		1	NUT SPECIAL	ECROU SPECIAL DADO SPECIALE	SPEZIALMUTTER TUERCA ESPECIAL
19	3389614M1		1	GASKET	JOINT GUARNIZIONE	DICHTSCHEIBE EMPAQUETADURA.
20	**3389861M91**		1	SHAFT	ARBRE ALBERO	WELLE ARBOL
21	**391376X1**		1	JOINT	JOINT PLAT GIUNTO	DICHTUNG JUNTA

Front Pto	Ipto Clutch
Prise De Force Avant	Embrayage Ipto
Frontzapfwelle	Ipto Kupplung
Pto Anteriore	Innesto Ipto
Tdf Delantera	Embrague Ipto

50-90

Clock Wise Drive Or Reverse Drive
Sens Horaire Ou Sens Inverse
Mit Frontzapfwelle Im Uhrzeigersinn Oder Umkerbare R Drehsinn
Con Presa Di Potenza Frontale Senso Orario O Sinis Troso
Con Toma De Fuerza Delantera Sentido Horario O Ezq Quidas

1-ZX50-001-A

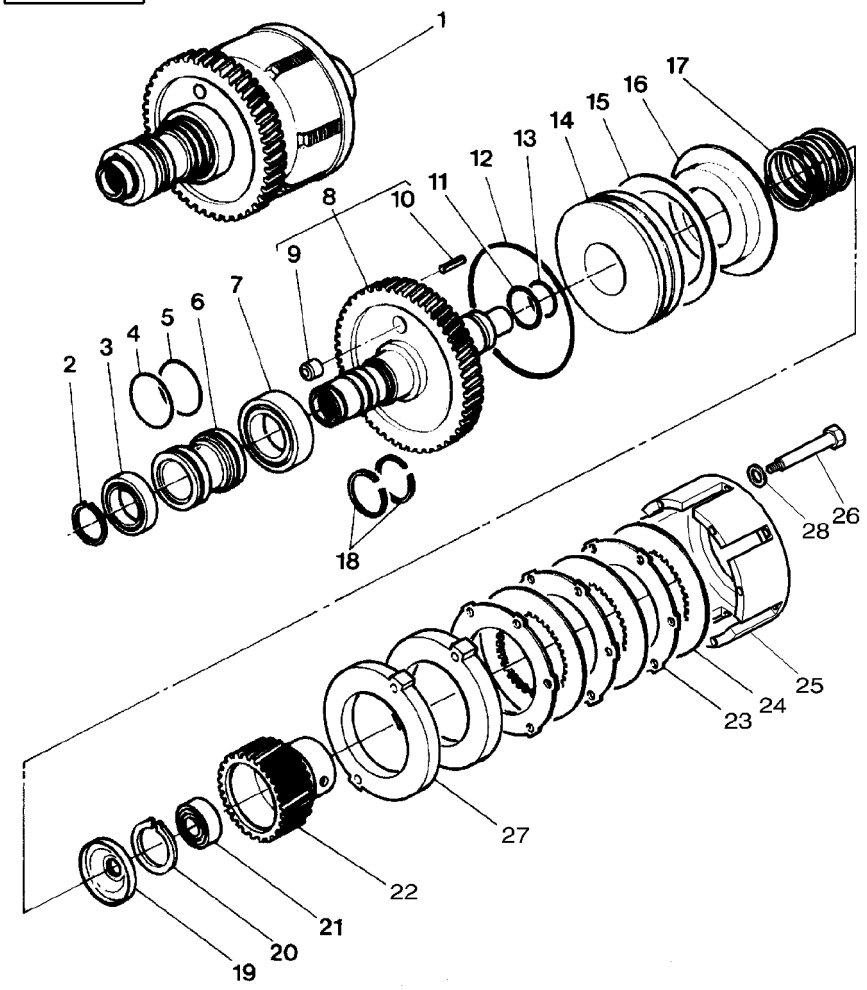

1	3714535M13			1	CLUTCH	EMBRAYAGE FRIZIONE	SCHALTKUPPLUNG EMBRAGUE
2	391832X1	1		1	CIRCLIP	SEGMENT D ARRET ANELLO D'ARRESTO	SICHERUNGSRING CIRCULITO
3	834820M1	1		1	BEARING ASSY	ROULEMENT CUSCINETTO COMPL	RADIALLAGER RODAMIENTO RAD
4	3007077X1	1		1	GASKET	JOINT GUARNIZIONE	DICHTSCHEIBE EMPAQUETADURA.
5	365801X1	1		1	RING	ANNEAU ANELLO	RING ARO
6	3384388M1	1		1	HUB	MOYEU MOZZO	NABE CUBO
7	3002233X1	1		1	BEARING ASSY	ROULEMENT CUSCINETTO COMPL	RADIALLAGER RODAMIENTO RAD
8	3714530M12	1	17-JUN-1999 77	1	HOUSING	CARTER CARCASSA	GEHAEUSE ALOJAMIENTO
8	3715426M13	1	18-JUN-1999 76	1	HOUSING	CARTER CARCASSA	GEHAEUSE ALOJAMIENTO
9	1872134M92	8		1	VALVE CHECK	VALVE CONTROLE VALVOLA RITEGNO	PRUEFVENTIL VALVULA D CIERRE
10	3019306X1	8	∅ 6X20MM	2	CLEVIS PIN	AXE PERNO D'ATTACCO	SPLINTBOLZEN BULON CILINDRICO
11	3582934M1	1		1	GASKET	JOINT GUARNIZIONE	DICHTSCHEIBE EMPAQUETADURA.
12	3582933M1	1		1	GASKET	JOINT GUARNIZIONE	DICHTSCHEIBE EMPAQUETADURA.
13	832038M1	1		1	O RING	JOINT TORIQUE ANELLO OR	O-RING JUNTA TORICA
14	3387193M1	1		1	PISTON	PISTON PISTONE	KOLBEN PISTON
15	3619148M1	1		1	CUP SPRING	RONDELLE RESSORT MOLLA CAPPELLOTT	TELLERFEDER CUBETA DE MUELLE
16	3387198M1	1		1	SUPPORT	SUPPORT SUPPORTO	LAGERUNG DISPOS.DE SOSTEN
17	3582893M1	1		1	SPRING	RESSORT MOLLA	FEDER MUELLE
18	3384502M1	1		2	SEGMENT	SEGMENT SEGMENTO	SEGMENT SEGMENTO
19	3619555M1	1		1	SPRING	RESSORT MOLLA	FEDER MUELLE
20	391061X1	1		1	CIRCLIP	SEGMENT D ARRET ANELLO D'ARRESTO	SICHERUNGSRING CIRCULITO
21	339073X1	1		1	BEAR. 6004	RLT 6004 CUSC. 6004	LAGER 6004 RODA. 6004
22	3619553M1	1		1	HUB	MOYEU MOZZO	NABE CUBO
23	3387346M1	1		3	COUNTERPLATE	CONTRE PLAQUE CONTROPIASTRA	GEGENPLATTE CONTRAPLACA
24	3387347M1	1		3	DISC	DISQUE DISCO	SCHEIBE DISCO
25	3387192M2	1		1	COVER	COUVERCLE COPERCHIO	DECKEL CUBIERTA

Front Pto	Ipto Clutch
Prise De Force Avant	Embrayage Ipto
Frontzapfwelle	Ipto Kupplung
Pto Anteriore	Innesto Ipto
Tdf Delantera	Embrague Ipto

50-90

Clock Wise Drive Or Reverse Drive
Sens Horaire Ou Sens Inverse
Mit Frontzapfwelle Im Uhrzeigersinn Oder Umkerbare R Drehsinn
Con Presa Di Potenza Frontale Senso Orario O Sinis Troso
Con Toma De Fuerza Delantera Sentido Horario O Ezq Quidas

1-ZX50-001-A

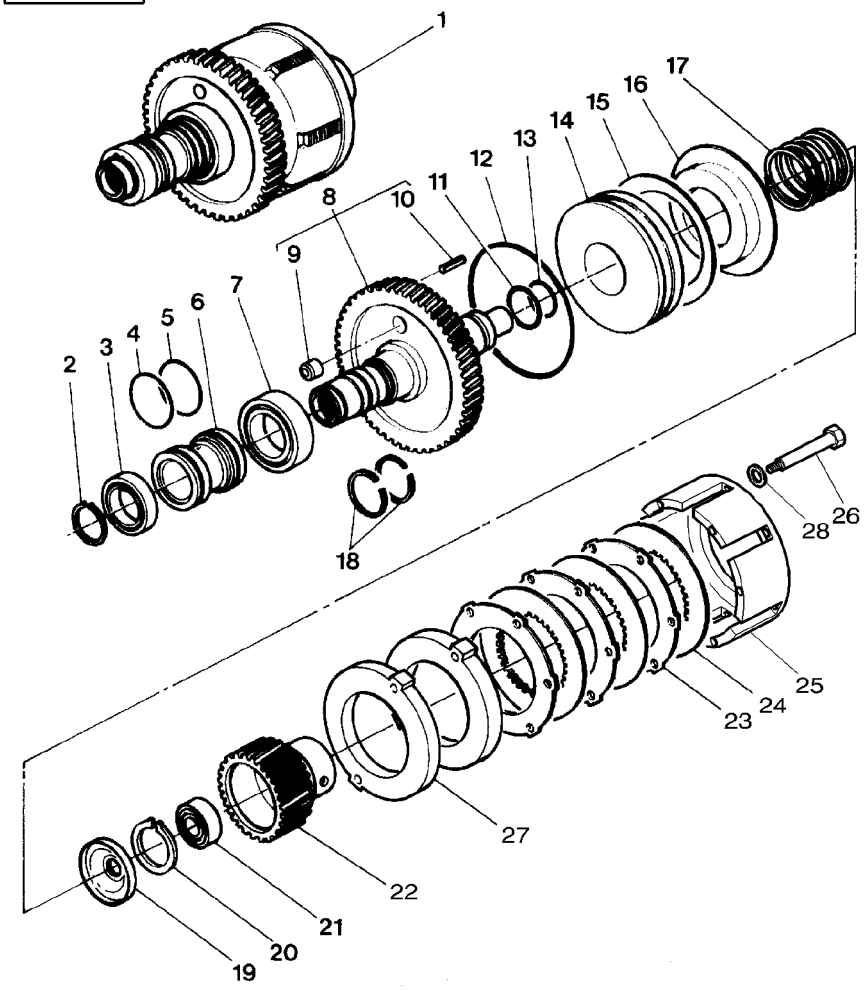

26	3010805X1	1	M6x55	**10**	SCREW METRIC	VIS METRIQUE VITE METRICA SCHRAUBE METR TORNILLO METRICO
27	3616056M2	1		**2**	SPACER	ENTRETOISE DISTANZIALE ABSTANDSTUECK PIEZA DISTANCIA
28	3019571X1	1		**10**	WASHER	RONDELLE RONDELLA UNTERLEGSCHEIBE ARANDELA

Clock Wise Drive Or Reverse Drive
Sens Horaire Ou Sens Inverse
Mit Frontzapfwelle Im Uhrzeigersinn Oder Umkerbare R Drehsinn
Con Presa Di Potenza Frontale Senso Orario O Sinis Troso
Con Toma De Fuerza Delantera Sentido Horario O Ezq Quidas

1-ZX38-001-A

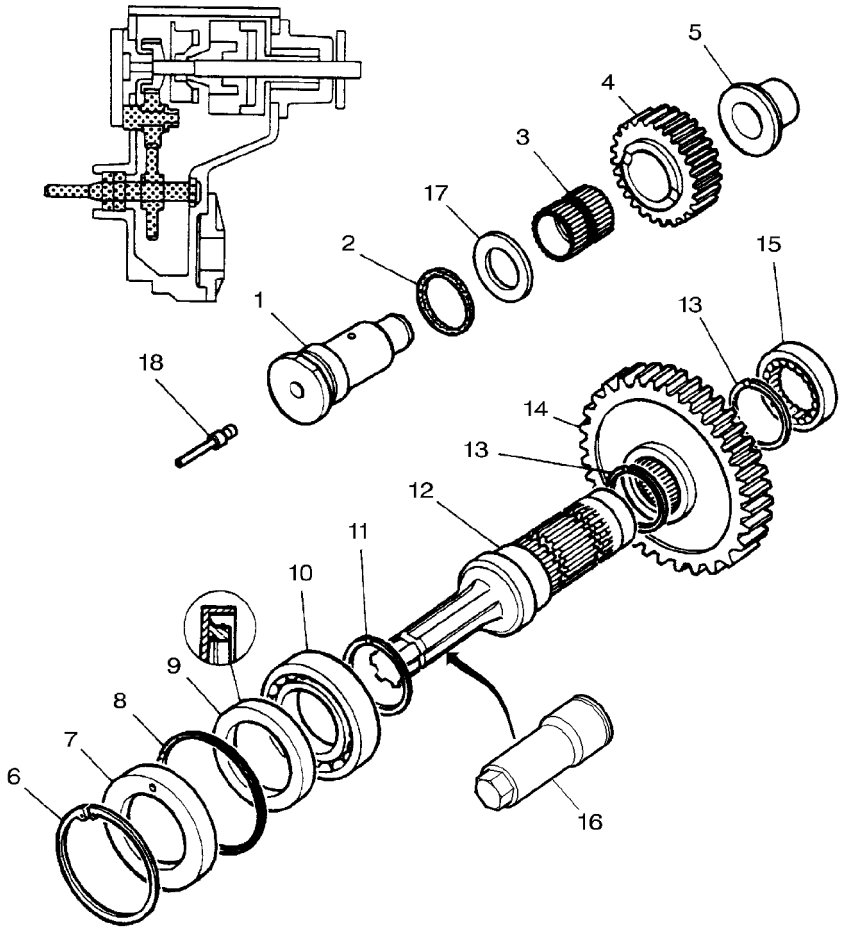

1	3615603M2	[B]		**2**	CLEVIS PIN	AXE PERNO D'ATTACCO	SPLINTBOLZEN BULON CILINDRICO
1	3615603M2	[C]		**1**	CLEVIS PIN	AXE PERNO D'ATTACCO	SPLINTBOLZEN BULON CILINDRICO
2	378201X1	[B]		**2**	O RING	JOINT TORIQUE ANELLO OR	O-RING JUNTA TORICA
2	378201X1	[C]		**1**	O RING	JOINT TORIQUE ANELLO OR	O-RING JUNTA TORICA
3	3389599M1	[B]		**2**	NEEDLE CAGE	CAGE A AIGUILLES PORTAGHI	NADELKAEFIG CAJA DE AGUJAS
3	3389599M1	[C]		**1**	NEEDLE CAGE	CAGE A AIGUILLES PORTAGHI	NADELKAEFIG CAJA DE AGUJAS
4	3389333M1	[B]	25	**2**	PINION	PIGNON PIGNONE	RITZEL PINON
4	3389333M1	[C]	25	**1**	PINION	PIGNON PIGNONE	RITZEL PINON
5	3389346M1	[B]		**2**	BUSH	BAGUE BOCCOLA	BUCHSE CASQUILLO
5	3389346M1	[C]		**1**	BUSH	BAGUE BOCCOLA	BUCHSE CASQUILLO
6	1440516X1			**1**	CIRCLIP	SEGMENT D ARRET ANELLO D'ARRESTO	SICHERUNGSRING CIRCULITO
7	3389339M2			**1**	SEALING HOLDER	PORTE JOINT PORTA TENUTA	DICHTRINGHALTER SOPORTE DE RETEN
8	842332M1			**1**	GASKET	JOINT GUARNIZIONE	DICHTSCHEIBE EMPAQUETADURA.
9	3389613M2			**1**	SEAL	JOINT ETANCHEITE PARAOLIO	DICHTRING RETEN
10	391261X1			**1**	BEAR. 6011	RLT 6011 CUSC. 6011	LAGER 6011 RODA. 6011
11	**377602X1**			**1**	CIRCLIP	SEGMENT D ARRET ANELLO D'ARRESTO	SICHERUNGSRING CIRCULITO
12	3617117M1		6	**1**	SHAFT	ARBRE ALBERO	WELLE ARBOL
12	3389338M1		21	**1**	SHAFT	ARBRE ALBERO	WELLE ARBOL
13	3386987M1			**2**	CIRCLIP	SEGMENT D ARRET ANELLO D'ARRESTO	SICHERUNGSRING CIRCULITO
14	3389337M1		51	**1**	PINION	PIGNON PIGNONE	RITZEL PINON
15	**3387381M1**			**1**	BEARING ASSY	ROULEMENT CUSCINETTO COMPL	RADIALLAGER RODAMIENTO RAD
16	3715248M1			**1**	PROTECTOR	PROTECTEUR PROTETTORE	SCHUTZ PROTECTOR
17	3615602M1	[B]		**2**	WASHER	RONDELLE RONDELLA	UNTERLEGSCHEIBE ARANDELA
17	3615602M1	[C]		**1**	WASHER	RONDELLE RONDELLA	UNTERLEGSCHEIBE ARANDELA
18	3581130M1	[B]		**1**	PLUG	BOUCHON TAPPO	VERSCHL.STOPFEN TAPON

Front Pto Prise De Force Avant Frontzapfwelle Pto Anteriore Tdf Delantera	Drive Transmission Antrieb Presa Moto Mando	50-95	Clock Wise Drive Or Reverse Drive Sens Horaire Ou Sens Inverse Mit Frontzapfwelle Im Uhrzeigersinn Oder Umkerbare R Drehsinn Con Presa Di Potenza Frontale Senso Orario O Sinis Troso Con Toma De Fuerza Delantera Sentido Horario O Ezq Quidas

1-ZX38-001-A

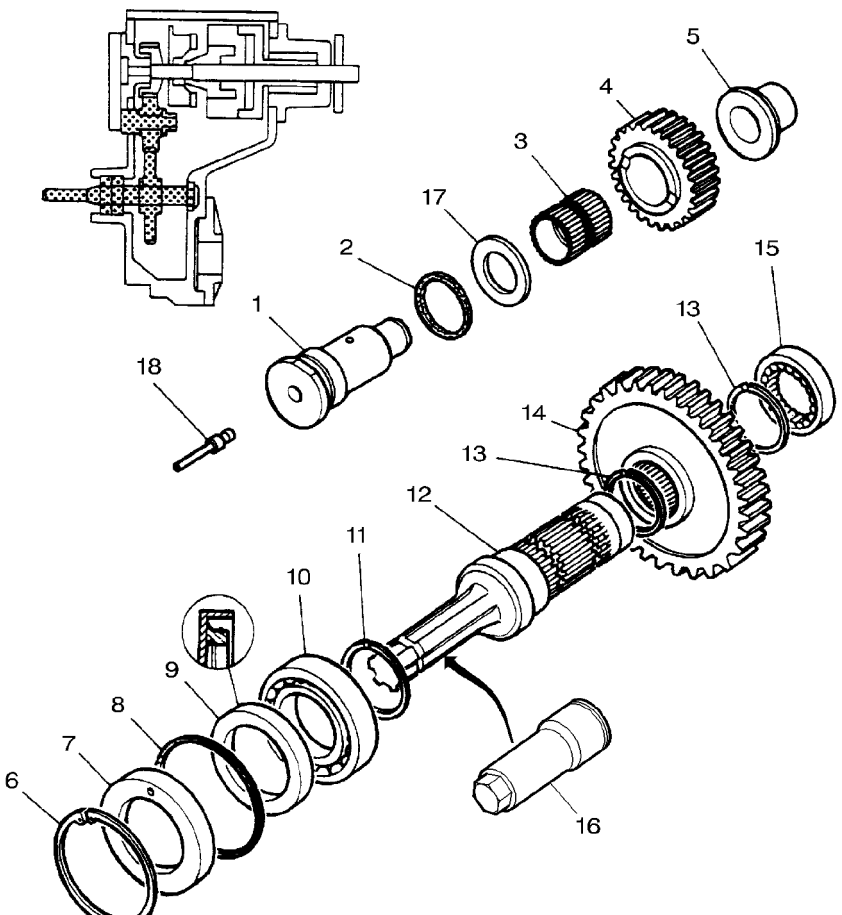

[B] REVERSE DRIVE FRONT PTO
AVEC PRISE DE FORCE AVANT SENS INVERSE
MIT FRONTZAPFWELLE UMKERBARER DREHSINN
CON PRESA DI POTENZA FRONTALE SINISTRO
CON TOMA DE FUERZA DELANTERA A IZQUIEDAS

[C] CLOCK WISE DRIVE FRONT PTO
AVEC PRISE DE FORCE AVANT SENS HORAIRE
MIT FRONTZAPFWELLE IM UHRZEIGERSINN
CON PRESA DI POTENZA FRONTALE SENSO ORARIO
CON TOMA DE FUERZA DELANTERA SENTIDO HORARIO

Front Pto	Drive	50-100	Clock Wise Drive Or Reverse Drive
Prise De Force Avant	Transmission		Sens Horaire Ou Sens Inverse
Frontzapfwelle	Antrieb		Mit Frontzapfwelle Im Uhrzeigersinn Oder Umkerbare R Drehsinn
Pto Anteriore	Presa Moto		Con Presa Di Potenza Frontale Senso Orario O Sinis Troso
Tdf Delantera	Mando		Con Toma De Fuerza Delantera Sentido Horario O Ezq Quidas

1-ZX38-004-B

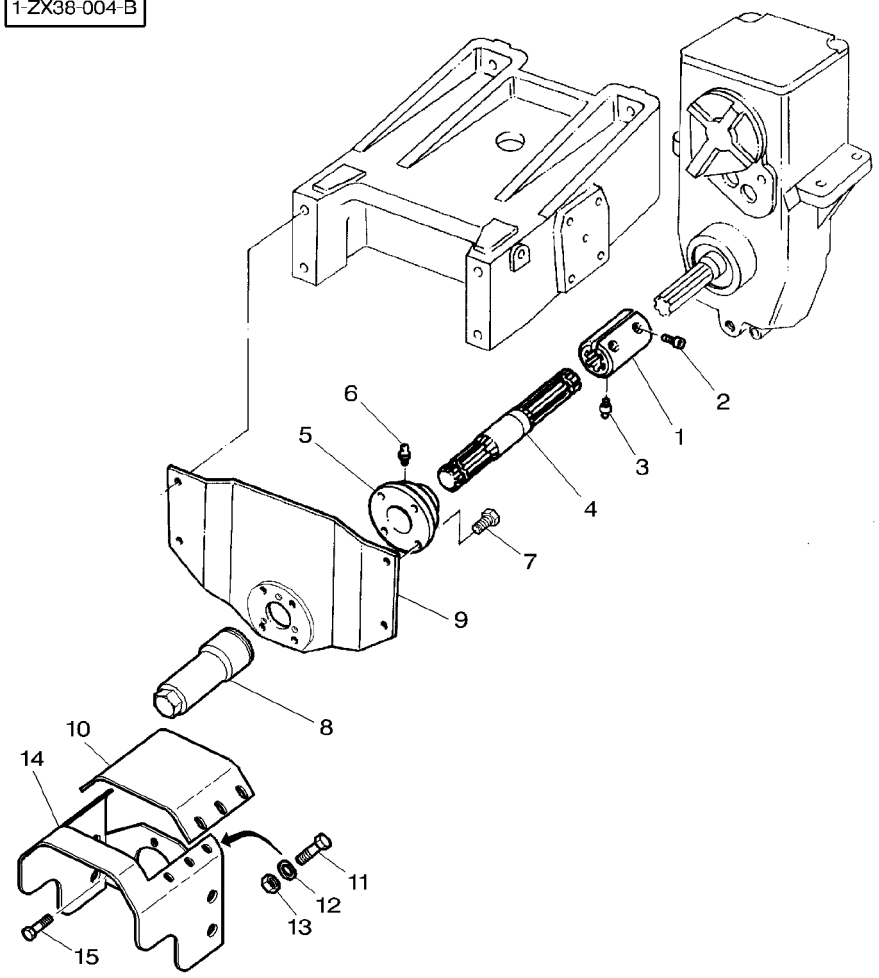

1	3617368M1		1	SLEEVE	MANCHON MANICOTTO	HUELSE MANCHA
2	1441366X1	M12X40	2	BOLT METRIC	BOULON METRIQUE BULLONE METRICO	MASCH.SCHRB MET PERNO METRICO
3	339608X1		1	GREASE NIPPLE	GRAISSEUR DROIT INGRASSAT.	FETT-NIPPEL ENGRASADOR
4	3617364M1	6	1	SHAFT	ARBRE ALBERO	WELLE ARBOL
4	3617365M1	21	1	SHAFT	ARBRE ALBERO	WELLE ARBOL
5	3617367M1		1	BEARING CARRIER	PALIER CUSCINETTO SUPP-	LAGER-GEHAEUSE TEJUELO
6	364461X1		1	GREASE NIPPLE	GRAISSEUR DROIT INGRASSAT.	FETT-NIPPEL ENGRASADOR
7	3009505X1	M12X25	4	SCREW METRIC	VIS METRIQUE VITE METRICA	SCHRAUBE METR TORNILLO METRICO
8	3715248M1		1	PROTECTOR	PROTECTEUR PROTETTORE	SCHUTZ PROTECTOR
9	3618167M1		1	SUPPORT	SUPPORT SUPPORTO	LAGERUNG DISPOS.DE SOSTEN
10	3777563M2		1	COVER	COUVERCLE COPERCHIO	DECKEL CUBIERTA
11	339666X1	M6X20	4	SCREW METRIC	VIS METRIQUE VITE METRICA	SCHRAUBE METR TORNILLO METRICO
12	390971X1		4	WASHER METRIC	RONDELLE METR. RONDELLA METRICO	SCHEIBE METRISCH ARANDELA METRICO
13	339030X1		4	NUT METRIC	ECROU METRIQUE DADO METRICO	MUTTER METRISCH TUERCA METRICO
14	3777564M2		1	COWL	GARANT CAPPOTTATURA	AUFSATZ CAPERUZA
15	339123X1	M8X20	3	SCREW METRIC	VIS METRIQUE VITE METRICA	SCHRAUBE METR TORNILLO METRICO

Front Pto	Drive
Prise De Force Avant	Transmission
Frontzapfwelle	Antrieb
Pto Anteriore	Presa Moto
Tdf Delantera	Mando

50-105

Clock Wise Drive Or Reverse Drive
Sens Horaire Ou Sens Inverse
Mit Frontzapfwelle Im Uhrzeigersinn Oder Umkerbare R Drehsinn
Con Presa Di Potenza Frontale Senso Orario O Sinis Troso
Con Toma De Fuerza Delantera Sentido Horario O Ezq Quidas

1-ZX38-003-A

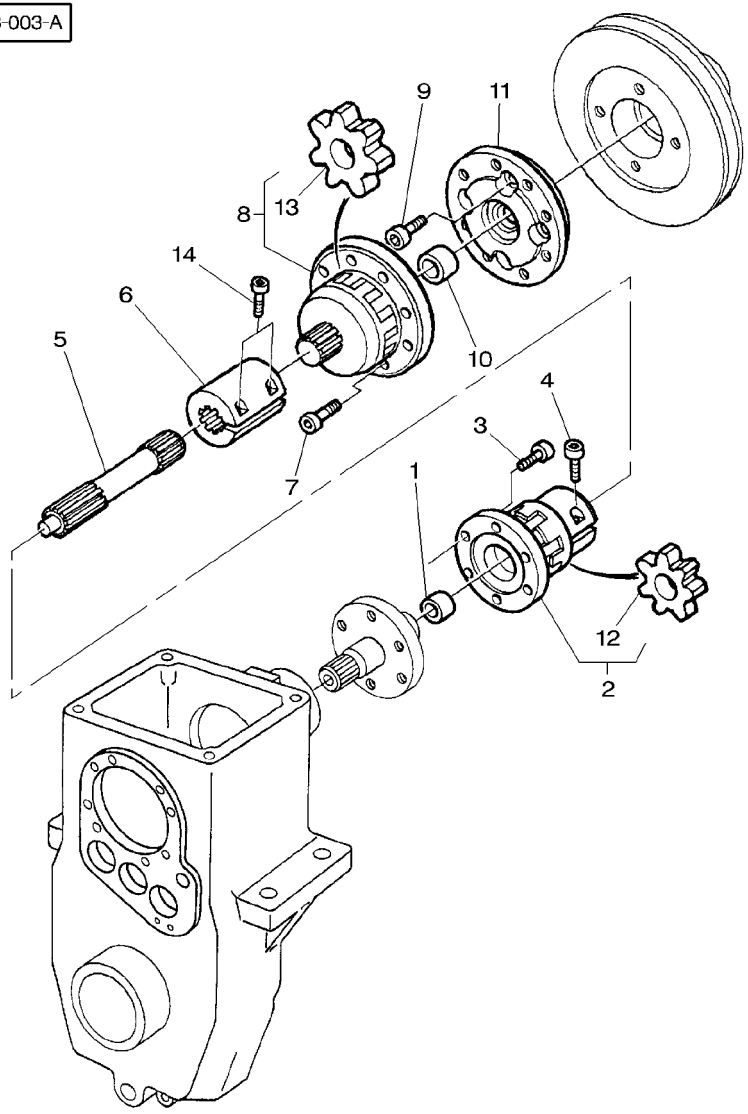

1	**3389791M1**		
2	3389825M1		
3	1440350X1	M6X20	
4	1440349X1	M8X30	
5	3582456M1	◄► 117MM	
6	**3619929M1**		
7	391989X1	M8X20	
8	**3580604M91**		
9	360955X1	7/16X1"	
10	3389766M1		
11	3582455M2		
12	3467932M1	2	
13	3467933M1	8	
14	3010238X1	M10X40	

1	BUSH	BAGUE BOCCOLA	BUCHSE CASQUILLO
1	COUPLER	ACCOUPLEMENT ACCOPPIATORE	KUPPLUNGSSTUECK ACOPLADOR
6	SCREW METRIC	VIS METRIQUE VITE METRICA	SCHRAUBE METR TORNILLO METRICO
1	SCREW METRIC	VIS METRIQUE VITE METRICA	SCHRAUBE METR TORNILLO METRICO
1	SHAFT	ARBRE ALBERO	WELLE ARBOL
1	SLEEVE	MANCHON MANICOTTO	HUELSE MANCHA
8	SCREW METRIC	VIS METRIQUE VITE METRICA	SCHRAUBE METR TORNILLO METRICO
1	COUPLER	ACCOUPLEMENT ACCOPPIATORE	KUPPLUNGSSTUECK ACOPLADOR
4	SCREW	VIS VITE	SCHRAUBE TORNILLO
1	BUSH	BAGUE BOCCOLA	BUCHSE CASQUILLO
1	HUB	MOYEU MOZZO	NABE CUBO
1	SHOCK ABSORBER	AMORTISSEUR AMMORTIZZATORE	STOSSDAEMPFER AMORTIGUADOR
1	SHOCK ABSORBER	AMORTISSEUR AMMORTIZZATORE	STOSSDAEMPFER AMORTIGUADOR
2	SCREW	VIS VITE	SCHRAUBE TORNILLO

Front Pto Prise De Force Avant Frontzapfwelle Pto Anteriore Tdf Delantera	Lines Tuyauteries Leitungen Tubazioni Lineas	50-110	Reverse Drive Front Pto Avec Prise De Force Avant Sens Inverse Mit Frontzapfwelle Umkerbarer Drehsinn Con Presa Di Potenza Frontale Sinistro Con Toma De Fuerza Delantera A Izquiedas

1-ZX40-006-A

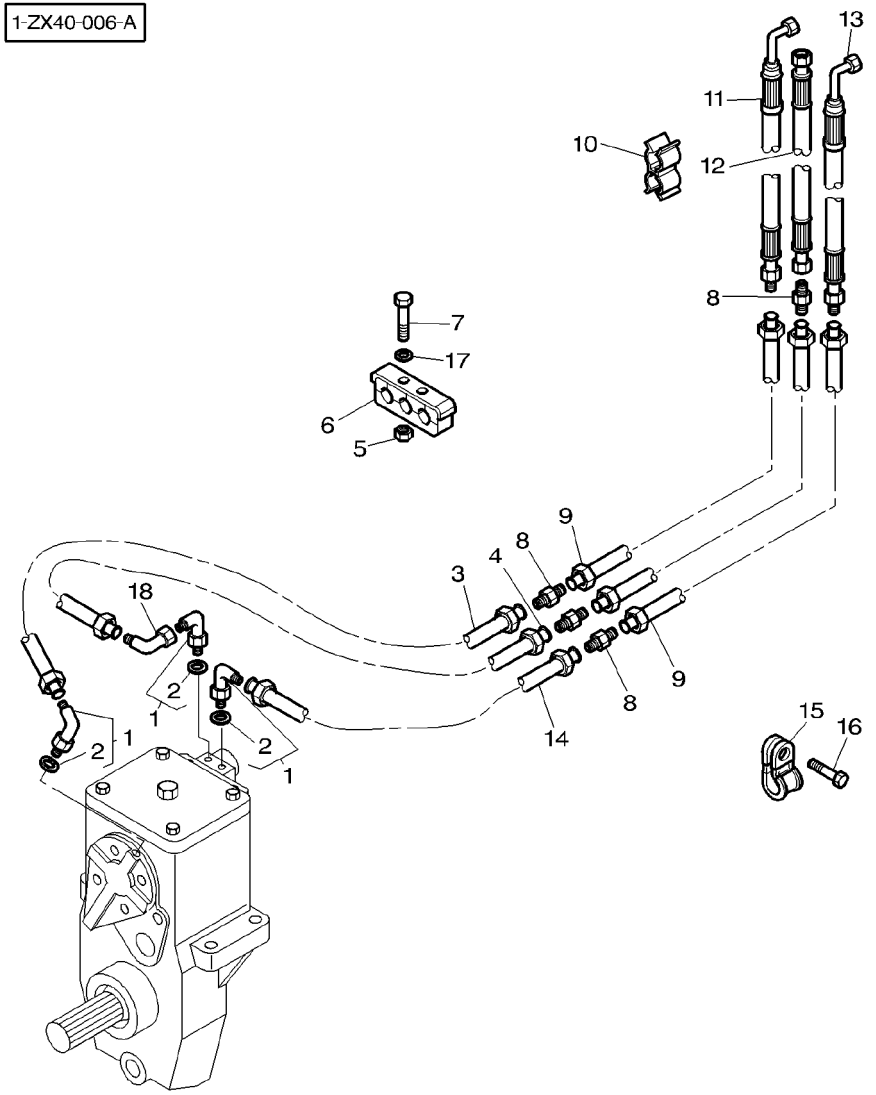

1	3019412X91		3	ELBOW	COUDE GOMITO	WINKELSTUECK CODO
2	3019395X1	1	1	O RING	JOINT TORIQUE ANELLO OR	O-RING JUNTA TORICA
3	3784011M1		1	TUBE	TUBE TUBO	ROHR TUBO
4	3784013M1		1	TUBE	TUBE TUBO	ROHR TUBO
5	339030X1		6	NUT METRIC	ECROU METRIQUE DADO METRICO	MUTTER METRISCH TUERCA METRICO
6	3784009M1		3	CLAMP	COLLIER FASCETTA	HALTESCHELLE ABRAZADERA
7	339096X1	M6X35	6	BOLT METRIC	BOULON METRIQUE BULLONE METRICO	MASCH.SCHRB MET PERNO METRICO
8	355529X1		4	UNION	RACCORD RACCORDO	VERSCHRAUBUNG RACOR
9	3784010M1		3	TUBE	TUBE TUBO	ROHR TUBO
10	3581696M1		4	CLAMP	COLLIER FASCETTA	HALTESCHELLE ABRAZADERA
11	3783432M1	◀▶ 1400MM	1	HYDR HOSE	FLEXIBLE TUBOFLEX IDRAUL	HYDR SCHLAUCH TUBO HIDRAULICO
12	3781572M1	◀▶ 2200MM	1	HYDR HOSE	FLEXIBLE TUBOFLEX IDRAUL	HYDR SCHLAUCH TUBO HIDRAULICO
13	3783431M1	◀▶ 2200MM	1	HYDR HOSE	FLEXIBLE TUBOFLEX IDRAUL	HYDR SCHLAUCH TUBO HIDRAULICO
14	3784014M1		1	TUBE	TUBE TUBO	ROHR TUBO
15	3010808X1		1	STRAP	PATTE CORREGGIA	LASCHE FAJA
16	339123X1	M8X20	1	SCREW METRIC	VIS METRIQUE VITE METRICA	SCHRAUBE METR TORNILLO METRICO
17	390971X1		6	WASHER METRIC	RONDELLE METR. RONDELLA METRICO	SCHEIBE METRISCH ARANDELA METRICO
18	364603X1		1	ELBOW	COUDE GOMITO	WINKELSTUECK CODO

Front Pto	Lines
Prise De Force Avant	Tuyauteries
Frontzapfwelle	Leitungen
Pto Anteriore	Tubazioni
Tdf Delantera	Lineas

50-115

Clock Wise Drive Front Pto
Avec Prise De Force Avant Sens Horaire
Mit Frontzapfwelle Im Uhrzeigersinn
Con Presa Di Potenza Frontale Senso Orario
Con Toma De Fuerza Delantera Sentido Horario

1-ZX40-005-A

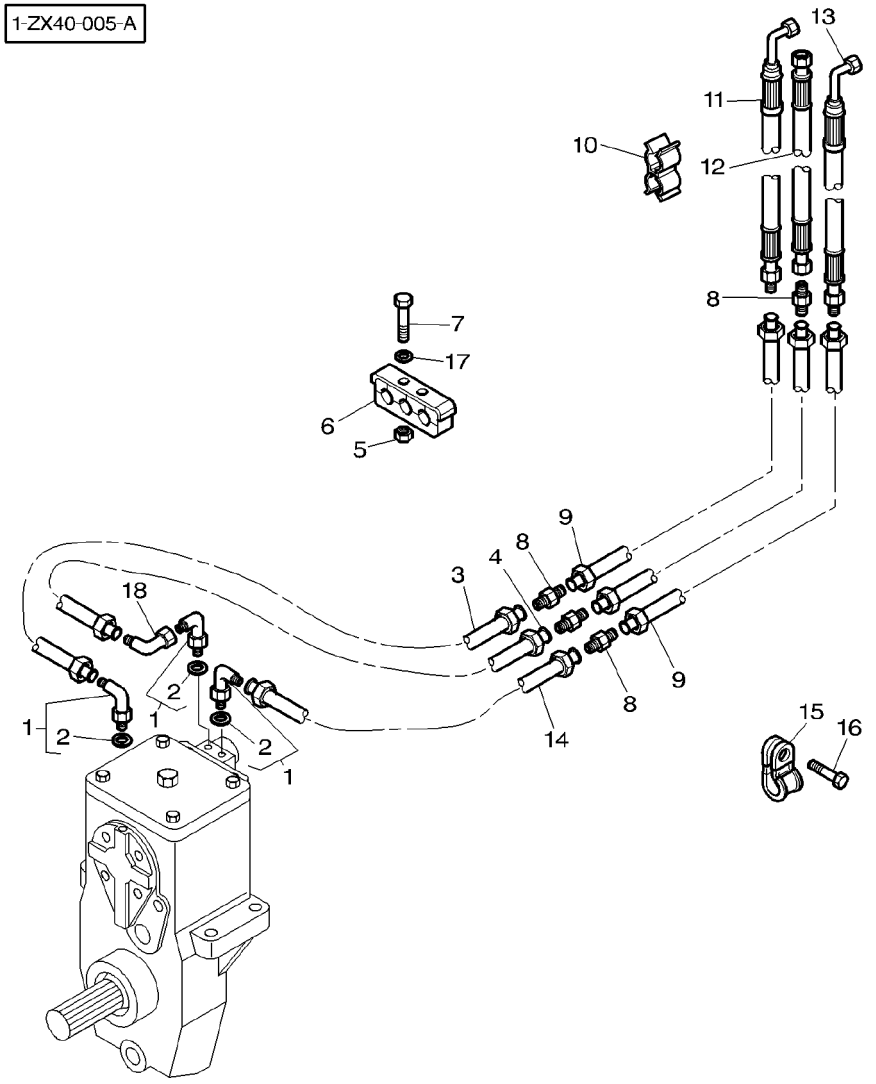

1	3019412X91		**3**	ELBOW	COUDE GOMITO	WINKELSTUECK CODO
2	3019395X1	1	**1**	O RING	JOINT TORIQUE ANELLO OR	O-RING JUNTA TORICA
3	3784012M1		**1**	TUBE	TUBE TUBO	ROHR TUBO
4	3784013M1		**1**	TUBE	TUBE TUBO	ROHR TUBO
5	339030X1		**6**	NUT METRIC	ECROU METRIQUE DADO METRICO	MUTTER METRISCH TUERCA METRICO
6	3784009M1		**3**	CLAMP	COLLIER FASCETTA	HALTESCHELLE ABRAZADERA
7	339096X1	M6X35	**6**	BOLT METRIC	BOULON METRIQUE BULLONE METRICO	MASCH.SCHRB MET PERNO METRICO
8	355529X1		**4**	UNION	RACCORD RACCORDO	VERSCHRAUBUNG RACOR
9	3784010M1		**3**	TUBE	TUBE TUBO	ROHR TUBO
10	3581696M1		**4**	CLAMP	COLLIER FASCETTA	HALTESCHELLE ABRAZADERA
11	3783432M1	◀▶ 1400MM	**1**	HYDR HOSE	FLEXIBLE TUBOFLEX IDRAUL	HYDR SCHLAUCH TUBO HIDRAULICO
12	3781572M1	◀▶ 2200MM	**1**	HYDR HOSE	FLEXIBLE TUBOFLEX IDRAUL	HYDR SCHLAUCH TUBO HIDRAULICO
13	3783431M1	◀▶ 2200MM	**1**	HYDR HOSE	FLEXIBLE TUBOFLEX IDRAUL	HYDR SCHLAUCH TUBO HIDRAULICO
14	3784014M1		**1**	TUBE	TUBE TUBO	ROHR TUBO
15	3010808X1		**1**	STRAP	PATTE CORREGGIA	LASCHE FAJA
16	339123X1	M8X20	**1**	SCREW METRIC	VIS METRIQUE VITE METRICA	SCHRAUBE METR TORNILLO METRICO
17	390971X1		**6**	WASHER METRIC	RONDELLE METR. RONDELLA METRICO	SCHEIBE METRISCH ARANDELA METRICO
18	364603X1		**1**	ELBOW	COUDE GOMITO	WINKELSTUECK CODO

Front Pto	Harness	50-120
Prise De Force Avant	Faisceau	
Frontzapfwelle	Kabelbaum	
Pto Anteriore	Cavi	
Tdf Delantera	Arnes	

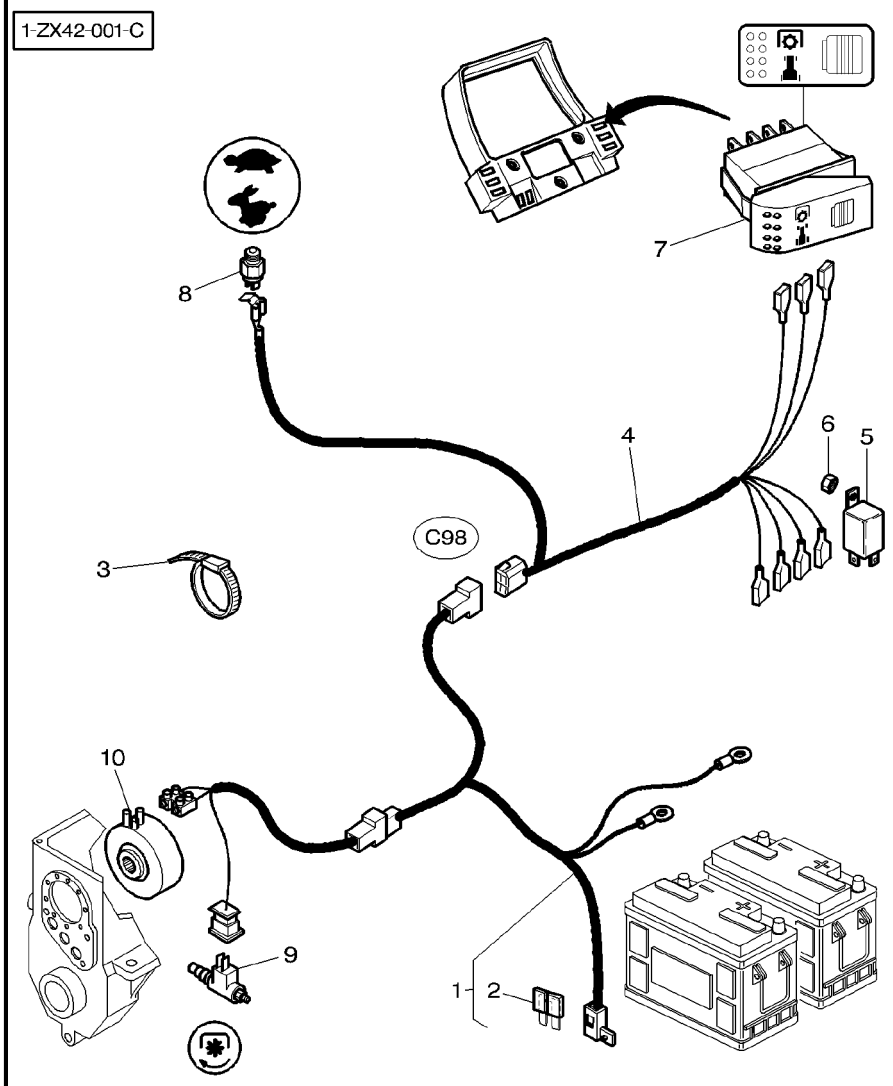

1	3784044M91			**1**	HARNESS	FAISCEAU FASCIOCAVI	KABELBAUM MAZO CABLES
2	***3387318M1***	1	5 AMP	**1**	FUSE	FUSIBLE FUSIBILE	SICHERUNG FUSIBLE
3	3619622M1			**7**	CABLE TIE	ATTACHE CABLE FASCETTA CAVI	KABELBINDER ENLACE DE CABLE
4	3783675M1			**1**	HARNESS	FAISCEAU FASCIOCAVI	KABELBAUM MAZO CABLES
5	***3615652M1***		12V−25A	**1**	RELAY	RELAIS RELE	RELAIS RELE
6	3010477X1			**1**	NUT METRIC	ECROU METRIQUE DADO METRICO	MUTTER METRISCH TUERCA METRICO
7	***3783086M1***			**1**	SWITCH,INDIRECT	CONTACTEUR INTERRUTTORE IND	KONTAKTSCHALTER CONTACTOR
8		👁	25−75 No 1	**1**	SWITCH,INDIRECT	CONTACTEUR INTERRUTTORE IND	KONTAKTSCHALTER CONTACTOR
9		👁	50−75 No 25	**1**	ELECTROVALVE	ELECTROVANNE ELETTROVALVOLA	ELECTRON.VENTIL ELECTROVALVULA
10	3389631M91			**1**	BRAKE	FREIN FRENO	BREMSE FRENO

Weight Frame And Tow Pin
Support De Masses Et Broche
Gewichtrahmen Und Kupplungsbolzen
Telaio Pesante E Perno Di Rimorchio
Bastidor Para Pesas Y Perno De Remolque

60-5

1-ZX15-002-B

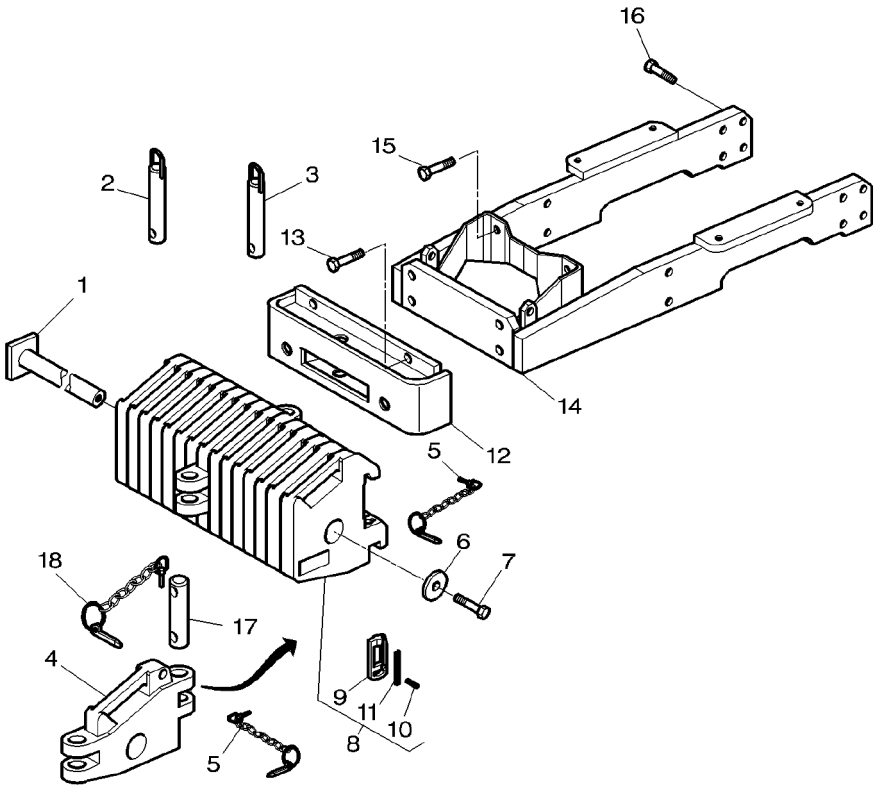

1	3619728M1	◀▶ 335MM	**1**	BRIDLE	BRIDE BRIGLIA	SPANNBAND BRIDA
1	3618713M1	◀▶ 470MM	**1**	BRIDLE	BRIDE BRIGLIA	SPANNBAND BRIDA
2	3387270M91		**1**	PIN HITCH	BROCHE PERNO ATTACCO	KUPPLUNGSBOLZEN PASADOR ENGAN.
3	3382813M91	◀▶ 215MM	**1**	PIN HITCH	BROCHE PERNO ATTACCO	KUPPLUNGSBOLZEN PASADOR ENGAN.
4	3382789M4		**1**	WEIGHT	MASSE PESO	GEWICHT PESA
5	3382812M91		**1**	PIN	GOUPILLE PERNO	BOLZEN PASADOR
6	3385963M1		**1**	WASHER	RONDELLE RONDELLA	UNTERLEGSCHEIBE ARANDELA
7	1441685X1	M16X60	**1**	SCREW METRIC	VIS METRIQUE VITE METRICA	SCHRAUBE METR TORNILLO METRICO
7	3008823X1	M16X80	**1**	SCREW METRIC	VIS METRIQUE VITE METRICA	SCHRAUBE METR TORNILLO METRICO
8	**3582867M92**	45KG	**1**	WEIGHT	MASSE PESO	GEWICHT PESA
9	3581636M1	8	**1**	HASP	LOQUET LUCCHETTO	DREHRIEGEL ALDABA
10	339080X1	8	**1**	ROLL PIN	GOUPILLE ROULEE SPINA ELASTICA	SPANNHUELSE PASADOR ELASTICO
11	1680172M1	8	**1**	SPRING	RESSORT MOLLA	FEDER MUELLE
12	3580888M5		**1**	SUPPORT	SUPPORT SUPPORTO	LAGERUNG DISPOS.DE SOSTEN
13	3386216M1	M20X60	**4**	SCREW	VIS VITE	SCHRAUBE TORNILLO
14	3782462M4		**1**	FRAME	BATI TELAIO	RAHMEN BASTIDOR
15	391329X1	M20X70	**2**	SCREW	VIS VITE	SCHRAUBE TORNILLO
16	1441590X1	M20X50	**14**	BOLT METRIC	BOULON METRIQUE BULLONE METRICO	MASCH.SCHRB MET PERNO METRICO
17	3782456M1	∅ 30X245MM	**1**	PIN HITCH	BROCHE PERNO ATTACCO	KUPPLUNGSBOLZEN PASADOR ENGAN.
18	3782461M92		**1**	PIN	GOUPILLE PERNO	BOLZEN PASADOR

Weight Frame And Tow Pin
Support De Masses Et Broche
Gewichtrahmen Und Kupplungsbolzen
Telaio Pesante E Perno Di Rimorchio
Bastidor Para Pesas Y Perno De Remolque

60-10

With Front Linkage
Avec Attelage Avant
Mit Vordere Kupplung
Con Attacco Anteriore
Con Enganche Delantero

1-ZX15-003-B

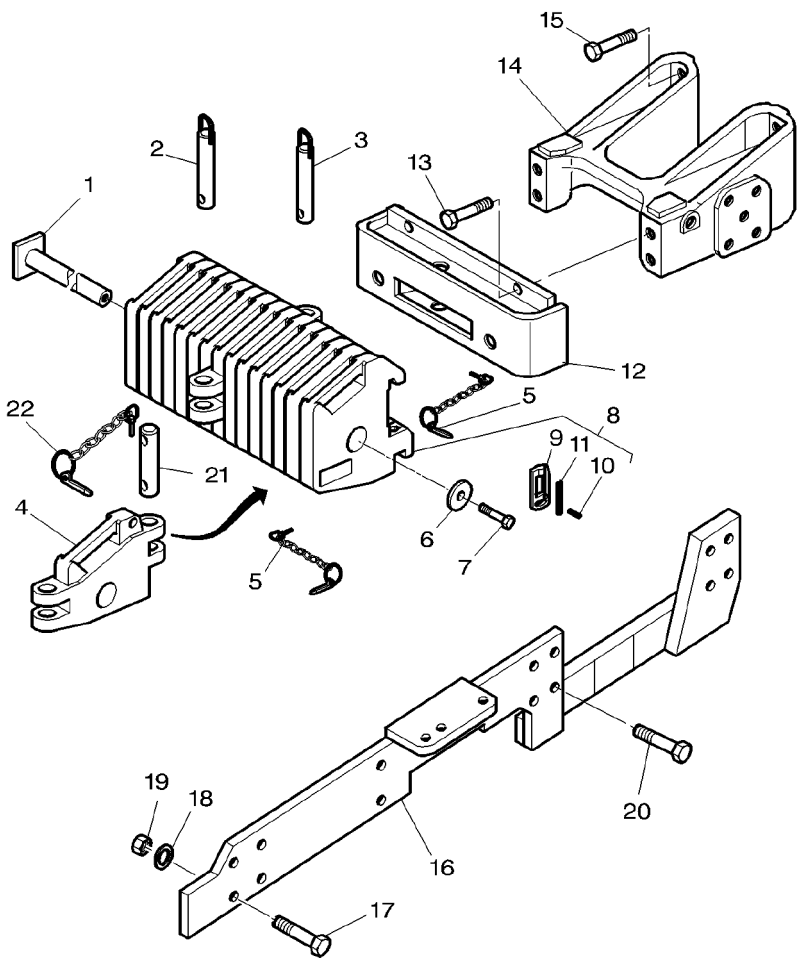

1	3619728M1	◀▶ 335MM	**1**	BRIDLE	BRIDE BRIGLIA	SPANNBAND BRIDA
1	3618713M1	◀▶ 470MM	**1**	BRIDLE	BRIDE BRIGLIA	SPANNBAND BRIDA
2	3387270M91	◀▶ 171.5MM	**1**	PIN HITCH	BROCHE PERNO ATTACCO	KUPPLUNGSBOLZEN PASADOR ENGAN.
3	3382813M91	◀▶ 215MM	**1**	PIN HITCH	BROCHE PERNO ATTACCO	KUPPLUNGSBOLZEN PASADOR ENGAN.
4	3382789M4		**1**	WEIGHT	MASSE PESO	GEWICHT PESA
5	3382812M91		**2**	PIN	GOUPILLE PERNO	BOLZEN PASADOR
6	3385963M1		**1**	WASHER	RONDELLE RONDELLA	UNTERLEGSCHEIBE ARANDELA
7	1441685X1	M16X60	**1**	SCREW METRIC	VIS METRIQUE VITE METRICA	SCHRAUBE METR TORNILLO METRICO
7	3008823X1	M16X80	**1**	SCREW METRIC	VIS METRIQUE VITE METRICA	SCHRAUBE METR TORNILLO METRICO
8	**3582867M92**	45KG	**1**	WEIGHT	MASSE PESO	GEWICHT PESA
9	3581636M1	8	**1**	HASP	LOQUET LUCCHETTO	DREHRIEGEL ALDABA
10	339080X1	8	**1**	ROLL PIN	GOUPILLE ROULEE SPINA ELASTICA	SPANNHUELSE PASADOR ELASTICO
11	1680172M1	8	**1**	SPRING	RESSORT MOLLA	FEDER MUELLE
12	3580888M5		**1**	SUPPORT	SUPPORT SUPPORTO	LAGERUNG DISPOS.DE SOSTEN
13	3010570X1	M20X45	**4**	SCREW	VIS VITE	SCHRAUBE TORNILLO
14	3715537M1		**1**	SPACER	ENTRETOISE DISTANZIALE	ABSTANDSTUECK PIEZA DISTANCIA
15	3580231M1	M20X75	**4**	SCREW	VIS VITE	SCHRAUBE TORNILLO
16	3783368M1	◀	**1**	RUNNER	LONGERON GIRANTE	LAEUFER RUEDA GIRATORIA
16	3783367M1	▶	**1**	RUNNER	LONGERON GIRANTE	LAEUFER RUEDA GIRATORIA
17	3001968X1	M20X60	**8**	SCREW	VIS VITE	SCHRAUBE TORNILLO
18	385365X1		**8**	WASHER	RONDELLE RONDELLA	UNTERLEGSCHEIBE ARANDELA
19	339035X1		**8**	NUT METRIC	ECROU METRIQUE DADO METRICO	MUTTER METRISCH TUERCA METRICO
20	391891X1	M20X90	**8**	BOLT METRIC	BOULON METRIQUE BULLONE METRICO	MASCH.SCHRB MET PERNO METRICO
21	3782456M1	∅ 30X245MM	**1**	PIN HITCH	BROCHE PERNO ATTACCO	KUPPLUNGSBOLZEN PASADOR ENGAN.
22	3782461M92		**1**	PIN	GOUPILLE PERNO	BOLZEN PASADOR

Chassis Structure
Structure De Chassis
Struktur Fahrgestell
Strutturatelaio
Estructura Chasis

60-15

1-ZE10-001-A

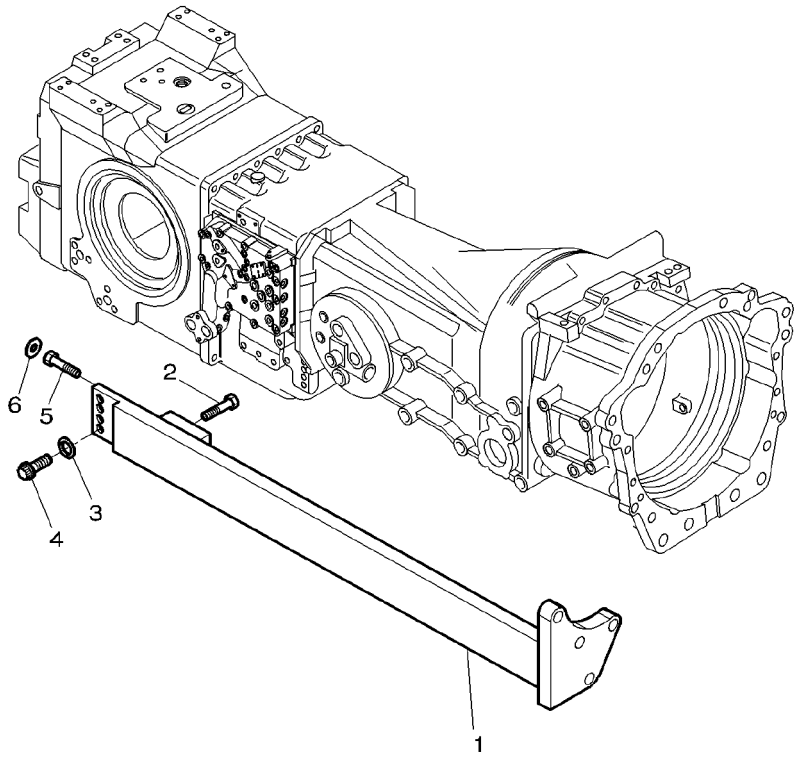

1	3716943M2	▶	**1**	REINFORCEMENT	RENFORT RINFORZO	VERSTAERKUNG REFUERZO
1	3716944M2	◀	**1**	REINFORCEMENT	RENFORT RINFORZO	VERSTAERKUNG REFUERZO
2	391989X1	M8X20	**2**	SCREW METRIC	VIS METRIQUE VITE METRICA	SCHRAUBE METR TORNILLO METRICO
3	3010875X1		**8**	WASHER	RONDELLE RONDELLA	UNTERLEGSCHEIBE ARANDELA
4	3010008X1	M16X50	**8**	SCREW METRIC	VIS METRIQUE VITE METRICA	SCHRAUBE METR TORNILLO METRICO
5	3619813M1		**2**	SCREW	VIS VITE	SCHRAUBE TORNILLO
6	3619814M1		**2**	WASHER	RONDELLE RONDELLA	UNTERLEGSCHEIBE ARANDELA

Belly Weight
Masse Ventrale
Grundgewicht
Zavorra Ventrale
Pesa Central

60-20

1-ZJ07-002-A

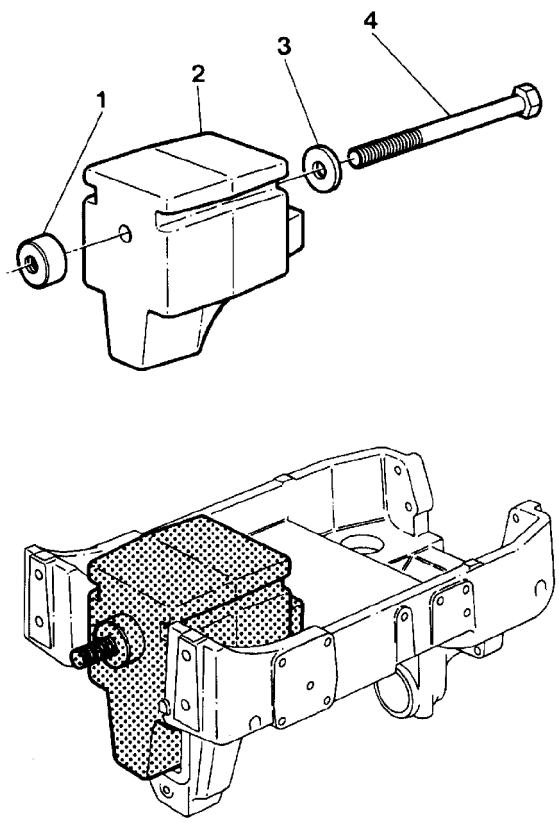

1	3386472M1		**1**	SPACER	ENTRETOISE DISTANZIALE	ABSTANDSTUECK PIEZA DISTANCIA
2	3384265M6	103KG	**1**	WEIGHT	MASSE PESO	GEWICHT PESA
3	3384348M1		**1**	WASHER	RONDELLE RONDELLA	UNTERLEGSCHEIBE ARANDELA
4	**3386471M1**	M20X365	**1**	SCREW	VIS VITE	SCHRAUBE TORNILLO

Front Axle
Essieu Avant
Vorderachse
Assale Anteriore
Eje Delantero

60-25

Bracket 2 Wheel Drive
Support 2 Roues Motrices
Lagerung Hinterradantrieb
Supporto 2 Ruote Motrici
Soporte 2 Ruedas Motrices

1-ZJ01-006-B

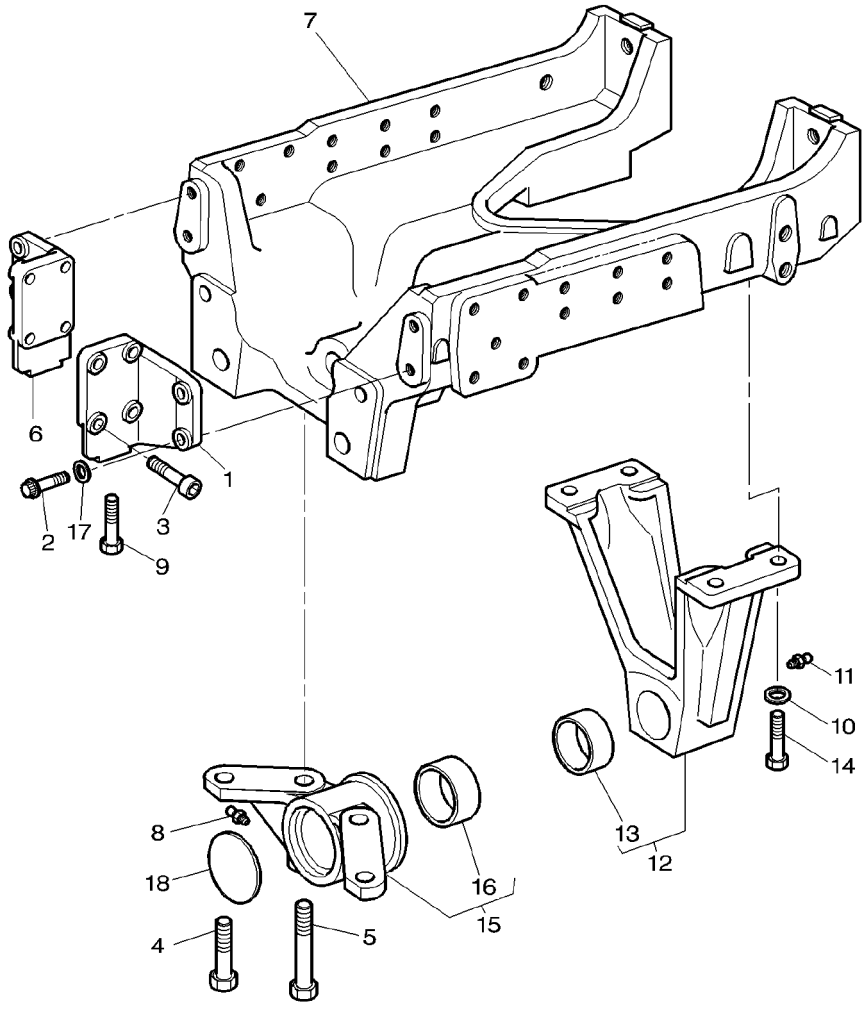

1	3582201M1	▶	**1**	SUPPORT	SUPPORT SUPPORTO	LAGERUNG DISPOS.DE SOSTEN
2	3384131M1	M16X55	**4**	BOLT METRIC	BOULON METRIQUE BULLONE METRICO	MASCH.SCHRB MET PERNO METRICO
3	3010007X1	M16X60	**8**	SCREW METRIC	VIS METRIQUE VITE METRICA	SCHRAUBE METR TORNILLO METRICO
4	3384129M1	M20X55	**2**	SCREW	VIS VITE	SCHRAUBE TORNILLO
5	3010633X1	M16X160	**2**	SCREW	VIS VITE	SCHRAUBE TORNILLO
6	3582200M1	◀	**1**	SUPPORT	SUPPORT SUPPORTO	LAGERUNG DISPOS.DE SOSTEN
7	3715695M4		**1**	AXLE HOLDER	SUPPORT D ESSIEU PORTA ASSALE	ACHSHALTER EJE DE APOYO
8	339608X1		**1**	GREASE NIPPLE	GRAISSEUR DROIT INGRASSAT.	FETT-NIPPEL ENGRASADOR
9	3019868X1	M16X115	**2**	BOLT METRIC	BOULON METRIQUE BULLONE METRICO	MASCH.SCHRB MET PERNO METRICO
10	385365X1	∅ M20	**4**	WASHER	RONDELLE RONDELLA	UNTERLEGSCHEIBE ARANDELA
11	339608X1		**1**	GREASE NIPPLE	GRAISSEUR DROIT INGRASSAT.	FETT-NIPPEL ENGRASADOR
12	3712093M11		**1**	FRAME	BATI TELAIO	RAHMEN BASTIDOR
13	3712078M1	12	**1**	BEARING	COUSSINET CUSCINETTO	LAGER COJINETE
14	3386216M1	M20X60	**4**	SCREW	VIS VITE	SCHRAUBE TORNILLO
15	3778516M12		**1**	AXLE CARRIER	PALIER D'ESSIEU SUPPORTO ASSALE	ACHSTRAEGER PORTADOR DEL EJE
16	3713930M1	15	**1**	BUSH	BAGUE BOCCOLA	BUCHSE CASQUILLO
17	3010875X1		**4**	WASHER	RONDELLE RONDELLA	UNTERLEGSCHEIBE ARANDELA
18	3010755X1		**1**	PLUG	BOUCHON TAPPO	VERSCHL.STOPFEN TAPON

Front Axle
Essieu Avant
Vorderachse
Assale Anteriore
Eje Delantero

60-30

Bracket 4 Wheel Drive
Support 4 Roues Motrices
Lagerung Allradantrieb
Supporto 4 Ruote Motrici
Soporte 4 Ruedas Motrices

1-ZJ01-004-B

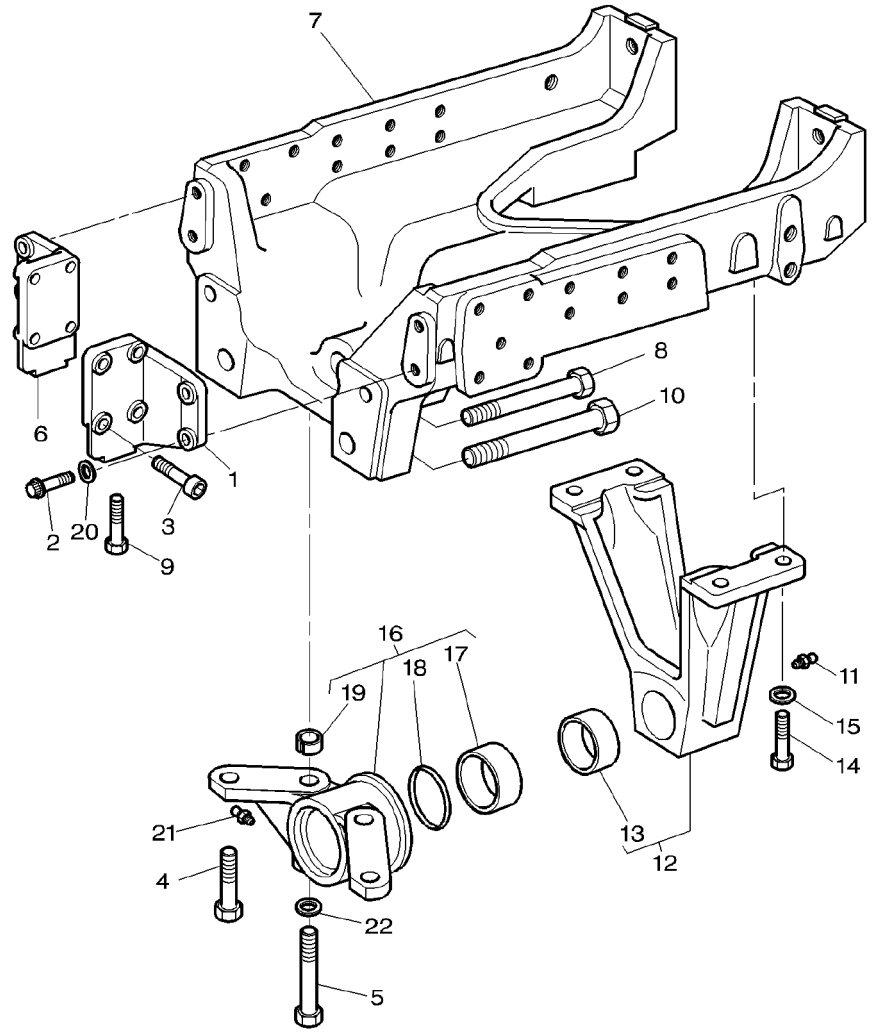

1	3582201M1	▶	**1**	SUPPORT	SUPPORT SUPPORTO	LAGERUNG DISPOS.DE SOSTEN
2	3384131M1	M16X55	**4**	BOLT METRIC	BOULON METRIQUE BULLONE METRICO	MASCH.SCHRB MET PERNO METRICO
3	3010007X1	M16X60	**8**	SCREW METRIC	VIS METRIQUE VITE METRICA	SCHRAUBE METR TORNILLO METRICO
4	3581527M1	M20X75	**2**	SCREW	VIS VITE	SCHRAUBE TORNILLO
5	3019888X1	▶| 15-09-2000 M16X195	**2**	BOLT	BOULON BULLONE	MASCH.SCHRAUBE PERNO
5	3019890X1	▶ 16-09-2000 M16X200	**2**	BOLT METRIC	BOULON METRIQUE BULLONE METRICO	MASCH.SCHRB MET PERNO METRICO
6	3582200M1	◀	**1**	SUPPORT	SUPPORT SUPPORTO	LAGERUNG DISPOS.DE SOSTEN
7	3715695M4		**1**	AXLE HOLDER	SUPPORT D ESSIEU PORTA ASSALE	ACHSHALTER EJE DE APOYO
8	3389552M1	M20X155	**2**	SCREW	VIS VITE	SCHRAUBE TORNILLO
9	3019868X1	M16X115	**2**	BOLT METRIC	BOULON METRIQUE BULLONE METRICO	MASCH.SCHRB MET PERNO METRICO
10	3389553M1	M24X165	**2**	SCREW	VIS VITE	SCHRAUBE TORNILLO
11	339608X1		**1**	GREASE NIPPLE	GRAISSEUR DROIT INGRASSAT.	FETT-NIPPEL ENGRASADOR
12	3386314M15		**1**	BEARING CARRIER	PALIER CUSCINETTO SUPP-	LAGER-GEHAEUSE TEJUELO
13	3782844M2	12	**1**	BUSH	BAGUE BOCCOLA	BUCHSE CASQUILLO
14	3386216M1	M20X60	**4**	SCREW	VIS VITE	SCHRAUBE TORNILLO
15	385365X1	∅ M20	**4**	WASHER	RONDELLE RONDELLA	UNTERLEGSCHEIBE ARANDELA
16	3712070M12		**1**	BEARING CARRIER	PALIER CUSCINETTO SUPP-	LAGER-GEHAEUSE TEJUELO
17	3712072M1	16	**1**	BUSH	BAGUE BOCCOLA	BUCHSE CASQUILLO
18	3010428X1	16	**1**	GASKET	JOINT GUARNIZIONE	DICHTSCHEIBE EMPAQUETADURA.
19	3010867X1	16	**2**	PIN	GOUPILLE PERNO	BOLZEN PASADOR
20	3010875X1		**4**	WASHER	RONDELLE RONDELLA	UNTERLEGSCHEIBE ARANDELA
21	339608X1		**1**	GREASE NIPPLE	GRAISSEUR DROIT INGRASSAT.	FETT-NIPPEL ENGRASADOR
22	3019575X1	▶ 16-09-2000	**2**	WASHER METRIC	RONDELLE METR. RONDELLA METRICO	SCHEIBE METRISCH ARANDELA METRICO

Front Axle
Essieu Avant
Vorderachse
Assale Anteriore
Eje Delantero

60-35

8 Holes Heavy Duty
8 Trous Modele Renforce
8 Loch Verstaerkte Ausfuehrung
8 Foros Tipo Pesante
8 Orificios Servicio Pesado

1-ZJ01-001-A

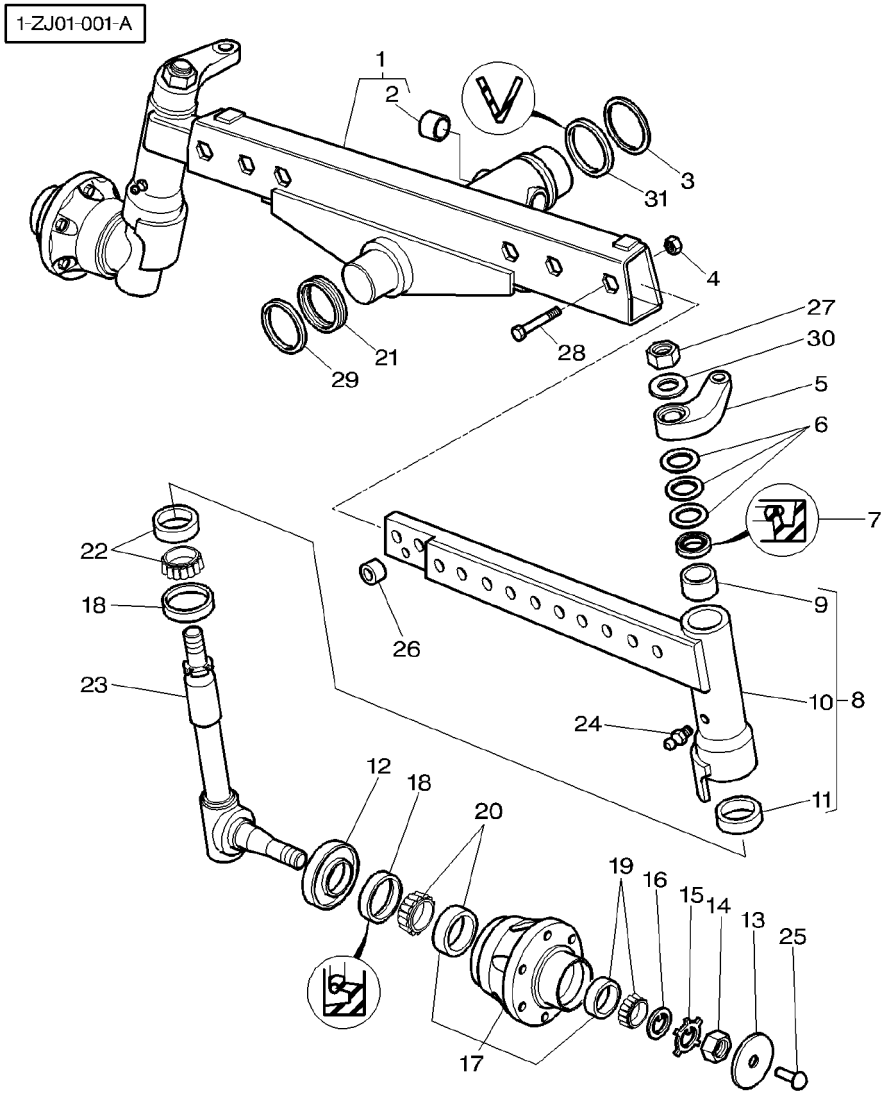

1	3809699M92		**1**	FRAME	BATI TELAIO	RAHMEN BASTIDOR
2	3387842M1	1	**2**	BUSH	BAGUE BOCCOLA	BUCHSE CASQUILLO
3	3713939M1		**1**	THRUST WASHER	RONDELLE BUTEE RONDELLA REGGISP	ANLAUFSCHEIBE ARANDELA ACELER
4	3010067X1	M20	**6**	NUT	ECROU DADO	MUTTER TUERCA
5	3383989M1	◀	**1**	STEERING ARM	BRAS DIRECTION BRACCIO STERZANT	LENKARM BRAZO DE DIRECC
5	3383990M1	▶	**1**	STEERING ARM	BRAS DIRECTION BRACCIO STERZANT	LENKARM BRAZO DE DIRECC
6	3619151M1		**6**	CUP SPRING	RONDELLE RESSORT MOLLA CAPPELLOTT	TELLERFEDER CUBETA DE MUELLE
7	3715539M1		**2**	GASKET	JOINT GUARNIZIONE	DICHTSCHEIBE EMPAQUETADURA.
8	3778018M11	◀	**1**	STEERING ARM	BRAS DIRECTION BRACCIO STERZANT	LENKARM BRAZO DE DIRECC
8	3778020M11	▶	**1**	STEERING ARM	BRAS DIRECTION BRACCIO STERZANT	LENKARM BRAZO DE DIRECC
9	**3387137M1**	8	**1**	BUSH	BAGUE BOCCOLA	BUCHSE CASQUILLO
10		8 REF NO 8	**1**	ARM	BRAS BRACCIO	ARM BRAZO
11		8 REF NO 22	**1**	RACE	CUVETTE CORSA	LAGERRING PISTA COJINETE
12	**3383996M1**		**2**	DUST SHIELD	CACHE POUSSIERE PARAPOLVERE*	STAUBDECKEL PLACA PROTECTORA
13	**3581721M1**		**2**	PLUG	BOUCHON TAPPO	VERSCHL.STOPFEN TAPON
14	3384126M1	M33	**2**	NUT	ECROU DADO	MUTTER TUERCA
15	3387135M1		**2**	WASHER	RONDELLE RONDELLA	UNTERLEGSCHEIBE ARANDELA
16	3383999M1		**2**	WASHER	RONDELLE RONDELLA	UNTERLEGSCHEIBE ARANDELA
17	**3387838M11**		**2**	IMPELLER HUB	MOYEU ROUE MOZZO GIRANTE	FLUEGELRADNABE CUBO DE IMPULSOR
18	3384105M1		**4**	GASKET	JOINT GUARNIZIONE	DICHTSCHEIBE EMPAQUETADURA.
19	390876X1		**1**	BEARING TAPER	ROULEMNT CONIQUE CUSCINETTO CONIC	KEGELLAGER RODAMIENTO CONI
20	3000570X91		**1**	BEARING ASSY	ROULEMENT CUSCINETTO COMPL	RADIALLAGER RODAMIENTO RAD
21	3712074M1	∅ 103MM	**1**	GASKET	JOINT GUARNIZIONE	DICHTSCHEIBE EMPAQUETADURA.
22	**3010058X91**		**2**	BEARING TAPER	ROULEMNT CONIQUE CUSCINETTO CONIC	KEGELLAGER RODAMIENTO CONI
23	**3616003M91**		**2**	SPINDLE	FUSEE FUSELLO	SPINDEL MANGUETA
24	339608X1		**2**	GREASE NIPPLE	GRAISSEUR DROIT INGRASSAT.	FETT-NIPPEL ENGRASADOR

Front Axle
Essieu Avant
Vorderachse
Assale Anteriore
Eje Delantero

60-35

8 Holes Heavy Duty
8 Trous Modele Renforce
8 Loch Verstaerkte Ausfuehrung
8 Foros Tipo Pesante
8 Orificios Servicio Pesado

1-ZJ01-001-A

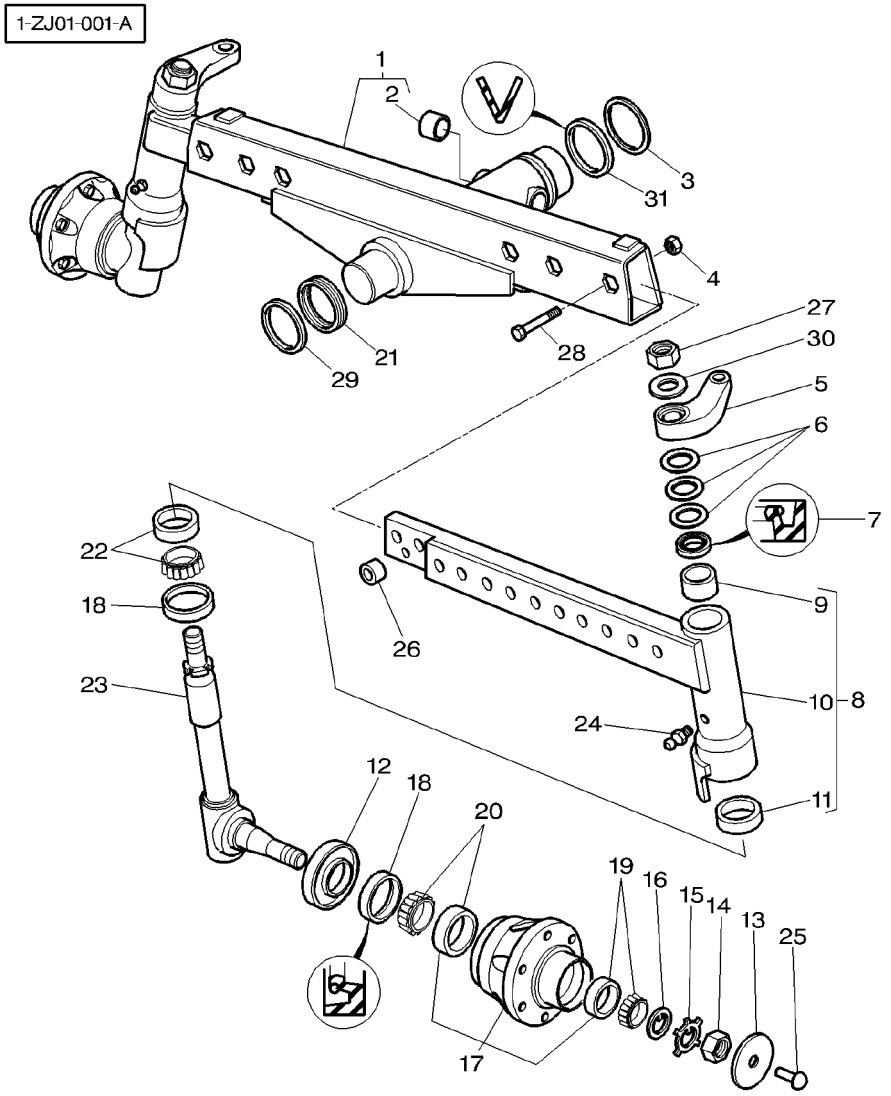

25	391349X1		**2**	RIVET	RIVET RIVETTO	NIET REMACHE
26	3778813M1		**2**	SPACER	ENTRETOISE DISTANZIALE	ABSTANDSTUECK PIEZA DISTANCIA
27	3384133M1	M33	**2**	NUT	ECROU DADO	MUTTER TUERCA
28	3010045X1	M20X90	**6**	SCREW	VIS VITE	SCHRAUBE TORNILLO
29	3712077M1		**1**	WASHER	RONDELLE RONDELLA	UNTERLEGSCHEIBE ARANDELA
30	353766X1		**2**	WASHER	RONDELLE RONDELLA	UNTERLEGSCHEIBE ARANDELA
31	3713940M1		**1**	GASKET	JOINT GUARNIZIONE	DICHTSCHEIBE EMPAQUETADURA.

Front Axle
Essieu Avant
Vorderachse
Assale Anteriore
Eje Delantero

60-40

8 Holes Heavy Duty
8 Trous Modele Renforce
8 Loch Verstaerkte Ausfuehrung
8 Foros Tipo Pesante
8 Orificios Servicio Pesado

1-ZJ01-002-A

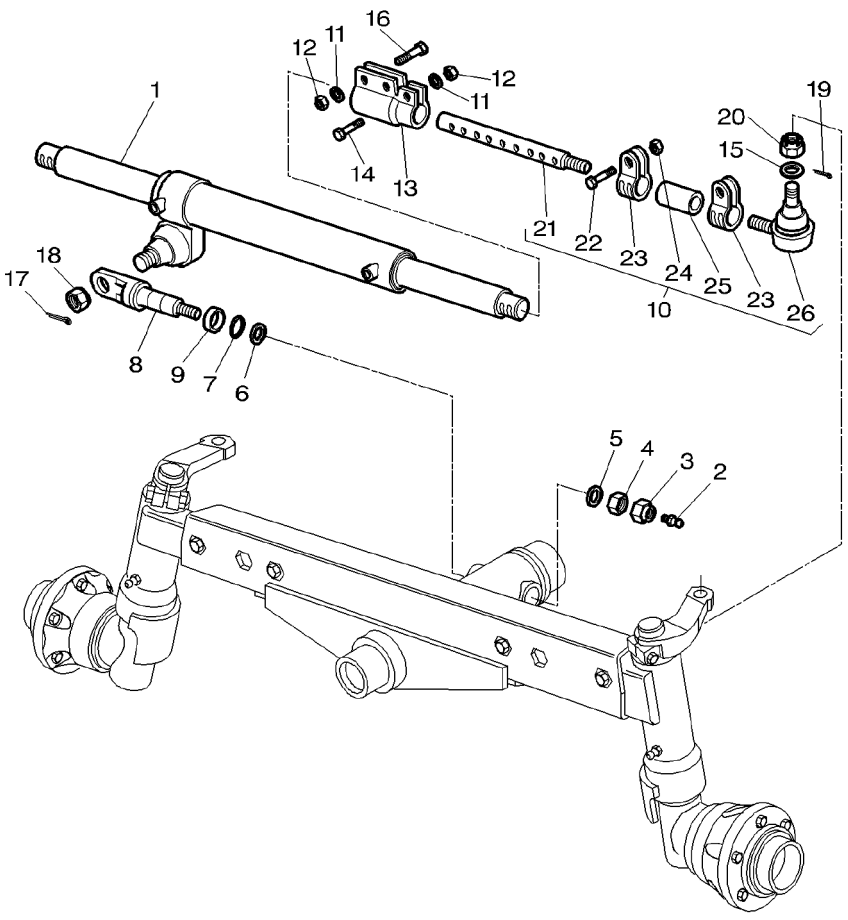

1	3483098M92			**1**	STEERING CYL	VERIN DIRECTION CILINDRO STERZO	LENKZYLINDER CILINDRO DIRECC
2	339608X1			**1**	GREASE NIPPLE	GRAISSEUR DROIT INGRASSAT.	FETT-NIPPEL ENGRASADOR
3	3387937M1	M30		**1**	TOP LOCKNUT	ECROU FREIN DADO DI TESTA	SELBSTS.MUTTER CONTRATUERCA SUP
4	3387938M1	M30		**1**	NUT	ECROU DADO	MUTTER TUERCA
5	359135X1			**1**	O RING	JOINT TORIQUE ANELLO OR	O-RING JUNTA TORICA
6	3387233M1	41X53X3		**1**	THRUST WASHER	RONDELLE BUTEE RONDELLA REGGISP	ANLAUFSCHEIBE ARANDELA ACELER
7	1440848X1			**1**	O RING	JOINT TORIQUE ANELLO OR	O-RING JUNTA TORICA
8	3387843M2			**1**	CLEVIS PIN	AXE PERNO D'ATTACCO	SPLINTBOLZEN BULON CILINDRICO
9	3388399M2			**1**	DUST SHIELD	CACHE POUSSIERE PARAPOLVERE*	STAUBDECKEL PLACA PROTECTORA
10	3780662M1	◄► 591MM		**2**	STEERING TIE ROD	BARRE ACCOUPLEMT TIRANTE DI STERZ	SPURSTANGE BARRA ACOPLAMIEN
11	339369X1			**6**	LOCK WASHER	RONDELLE FREIN ROSETTA ELASTICA	FEDERRING ARANDELA GROWER
12	3009695X1	M12		**6**	NUT METRIC	ECROU METRIQUE DADO METRICO	MUTTER METRISCH TUERCA METRICO
13	3387939M2			**2**	EXTENSION	RALLONGE PROLUNGA	VERLAENGERUNG EXTENSION
14	3009512X1	M12X60		**2**	BOLT METRIC	BOULON METRIQUE BULLONE METRICO	MASCH.SCHRB MET PERNO METRICO
15	390974X1	10		**2**	WASHER METRIC	RONDELLE METR. RONDELLA METRICO	SCHEIBE METRISCH ARANDELA METRICO
16	3009515X1	M12X80		**4**	BOLT METRIC	BOULON METRIQUE BULLONE METRICO	MASCH.SCHRB MET PERNO METRICO
17	354071X1			**1**	PIN	GOUPILLE PERNO	BOLZEN PASADOR
18	3008868X1			**1**	CASTLE NUT	ECROU A CRENEAU DADO A CORONA	KRONENMUTTER TUERCA ALMENADA
19	354068X1	10		**1**	PIN	GOUPILLE PERNO	BOLZEN PASADOR
20	**3005888X1**	10		**1**	CASTLE NUT	ECROU A CRENEAU DADO A CORONA	KRONENMUTTER TUERCA ALMENADA
21	**3104946M1**	10	◄► 496MM	**1**	STEM	TIGE STELO	STIEL VASTAGO
22	3104948M1	10		**2**	SCREW	VIS VITE	SCHRAUBE TORNILLO
23	3104944M1	10		**2**	CLAMP	COLLIER FASCETTA	HALTESCHELLE ABRAZADERA
24	1442921X1	10		**2**	NUT	ECROU DADO	MUTTER TUERCA
25	3104947M1	10		**1**	TUBE	TUBE TUBO	ROHR TUBO
26	***3104945M1***	10		**1**	TOGGLE	ROTULE ROTULA	GELENKZAPFEN PERNO ENGANCHE

1-ZJ04-001-A

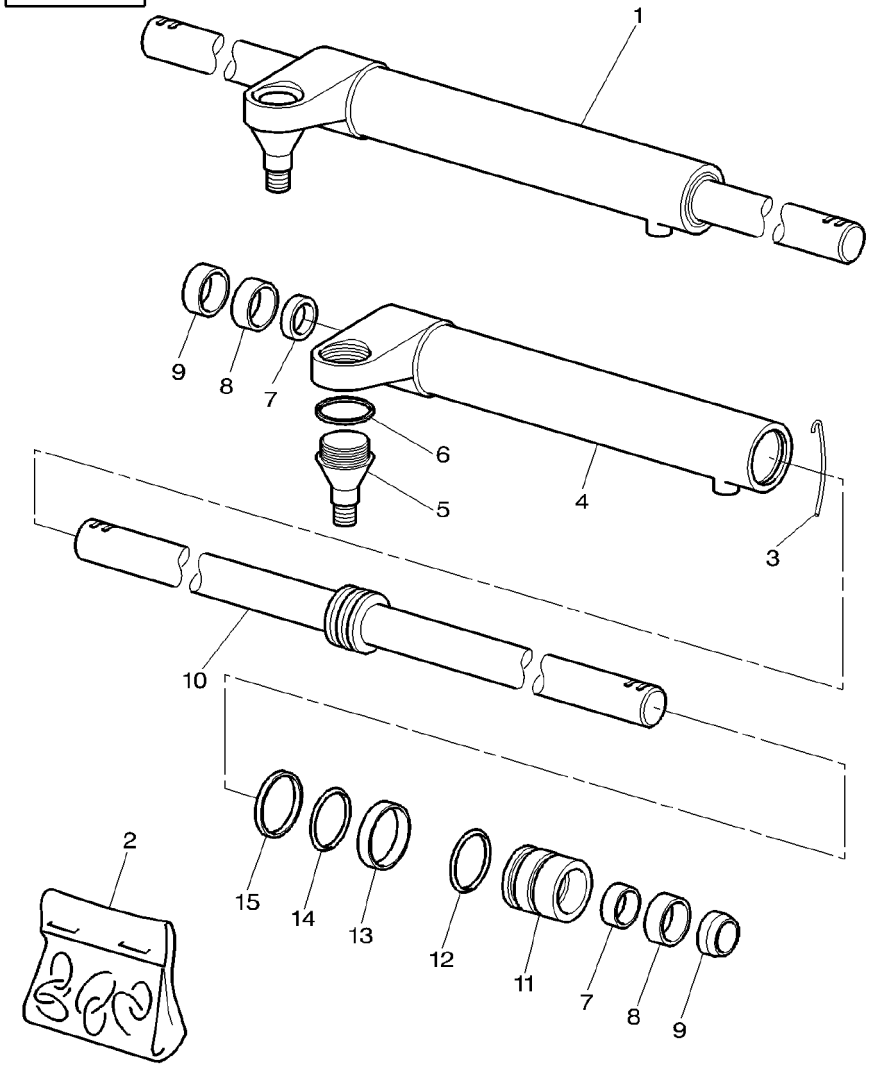

1	3483098M92	PACOMA ∅ 68MM	**1**	STEERING CYL	VERIN DIRECTION CILINDRO STERZO	LENKZYLINDER CILINDRO DIRECC
2	3443433M93		**X**	KIT, SEAL	JEU ETANCHEITE KIT TENUTA	DICHTRINGSATZ RETENES JUEGO
3	3443432M1	1	**1**	SNAPRING	SEGMENT ARRET ANELLO SIEGER	SPRENGRING ANILLA RETENCION
4	3443703M92	1	**1**	BARREL	CORPS CYLINDRE CANNA	ZYLINDERGEHAEUSE CUERPO CILINDRO
5	3443896M1	1	**1**	BALL JOINT	JOINT SPHERIQUE GIUNTO SFERICO	KUGELGELENK UNION ROTULA
6	3443901M1	1	**1**	TAB WASHER	RONDELLE EVENT PIASTRINA SICUR	SICHERUNGSBLECH ARANDELA ALETA
7	3443429M1	2	**2**	RING	ANNEAU ANELLO	RING ARO
8	3443430M1	2	**2**	SEAL	JOINT ETANCHEITE PARAOLIO	DICHTRING RETEN
9	1606575M1	2	**2**	WIPER	ESSUYEUR SPAZZOLA VETRI	WISCHER LIMPIADOR
10	3443707M91	1	**1**	CYLINDER ROD	TIGE DE VERIN ASTA CILINDRO	KOLBENSTANGE BIELA DE CILINDR
11	3443413M1	1	**1**	BEARING	COUSSINET CUSCINETTO	LAGER COJINETE
12	1441521X1	2	**1**	SEAL	JOINT ETANCHEITE PARAOLIO	DICHTRING RETEN
13	3443428M1	2	**1**	RING	ANNEAU ANELLO	RING ARO
14	338909X1	2	**1**	O RING	JOINT TORIQUE ANELLO OR	O−RING JUNTA TORICA
15	3484804M1	2	**1**	SEAL	JOINT ETANCHEITE PARAOLIO	DICHTRING RETEN

Front Axle 4 Wheel Drive
Essieu Avant 4 Roues Motrices
Allradantrieb Vorderachse
Assale Anteriore
Eje Delantero 4 Ruedas Motrices

Clutch
Embrayage
Kupplung
Frizione
Embrague

60-50

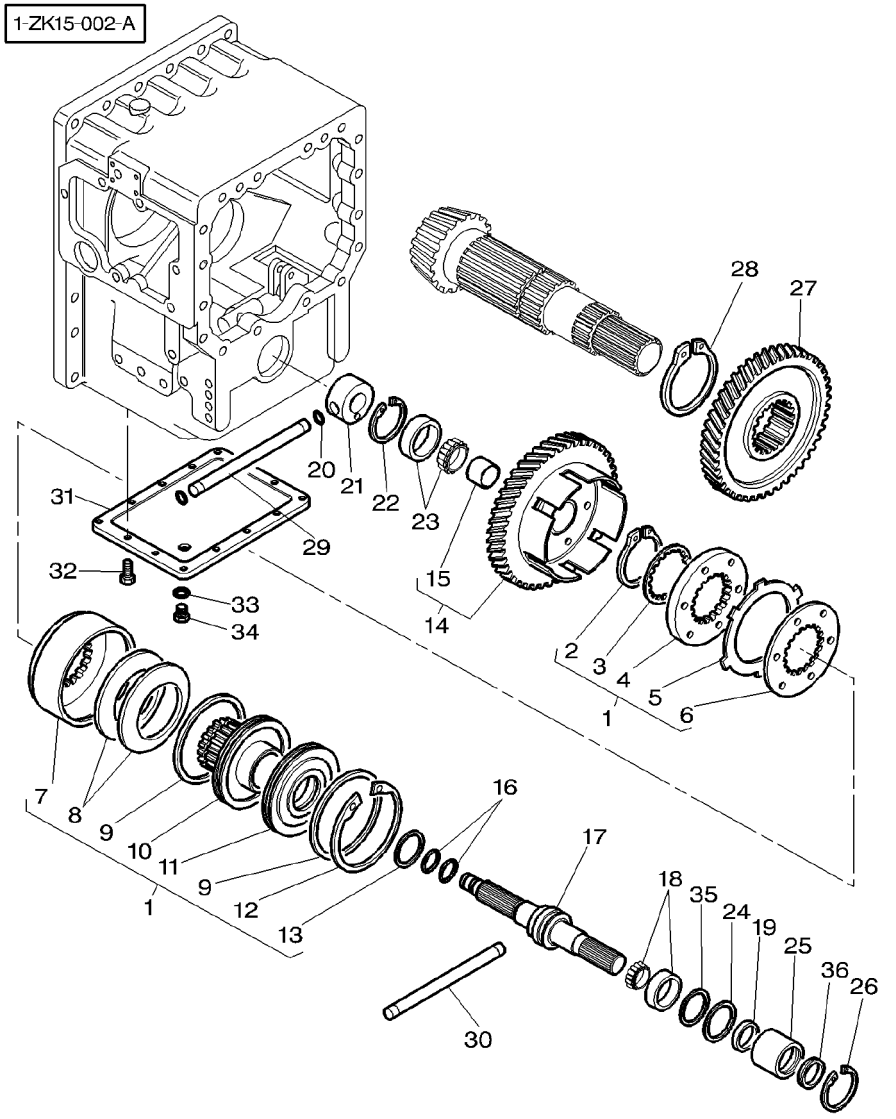

1	3713519M12	[B]	1	CLUTCH	EMBRAYAGE FRIZIONE	SCHALTKUPPLUNG EMBRAGUE
2	1440533X1	1	1	CIRCLIP	SEGMENT D ARRET ANELLO D'ARRESTO	SICHERUNGSRING CIRCULITO
3	**3387182M1**	1 ⧗ 0,6 MM	X	CHOCK	CALE PASSACAVO	UNTERLEG-KEIL CALZA
3	**3033343M1**	1 ⧗ 0,8 MM	X	SHIM	CALE REGLAGE SPESSORE	EINSTELLBLECH CALCE
3	3713553M1	1 ⧗ 1,4 MM	X	CHOCK	CALE PASSACAVO	UNTERLEG-KEIL CALZA
3	3713554M1	1 ⧗ 1,7 MM	X	CHOCK	CALE PASSACAVO	UNTERLEG-KEIL CALZA
4	3583586M2	1 [B]	1	TRAY	PLATEAU BACINELLA	MULDE BANDEJA
5	3616400M2	1 [B]	6	DISC	DISQUE DISCO	SCHEIBE DISCO
6	3384488M1	1 [B]	5	TRAY	PLATEAU BACINELLA	MULDE BANDEJA
7	3384414M2	1	1	HOUSING	CARTER CARCASSA	GEHAEUSE ALOJAMIENTO
8	3619473M1	1	2	WASHER	RONDELLE RONDELLA	UNTERLEGSCHEIBE ARANDELA
9	3384524M1	1	2	O RING	JOINT TORIQUE ANELLO OR	O-RING JUNTA TORICA
10	3583585M2	1 [B]	1	HUB	MOYEU MOZZO	NABE CUBO
11	3384427M1	1	1	COVER	COUVERCLE COPERCHIO	DECKEL CUBIERTA
12	1441403X1	1	1	CIRCLIP	SEGMENT D ARRET ANELLO D'ARRESTO	SICHERUNGSRING CIRCULITO
13	3384523M1	1	1	O RING	JOINT TORIQUE ANELLO OR	O-RING JUNTA TORICA
14	3716453M15	[B] 49	1	PINION	PIGNON PIGNONE	RITZEL PINON
14	3791720M93	[BG] 52 MF 8220	1	PINION	PIGNON PIGNONE	RITZEL PINON
15	3387727M1	14	1	BUSH	BAGUE BOCCOLA	BUCHSE CASQUILLO
16	**3382874M1**		2	SEGMENT	SEGMENT SEGMENTO	SEGMENT SEGMENTO
17	3716526M11	[B]	1	SHAFT	ARBRE ALBERO	WELLE ARBOL
18	3010697X91		1	BEARING ASSY	ROULEMENT CUSCINETTO COMPL	RADIALLAGER RODAMIENTO RAD
19	3716067M2		1	OIL SEAL	BAGUE ETANCHEITE BOCCOLA PARAOLIO	OELDICHTRING BUJE RETENACEITE
20	377494X1		2	O RING	JOINT TORIQUE ANELLO OR	O-RING JUNTA TORICA
21	3716441M2		1	BUSH	BAGUE BOCCOLA	BUCHSE CASQUILLO

1-ZK15-002-A

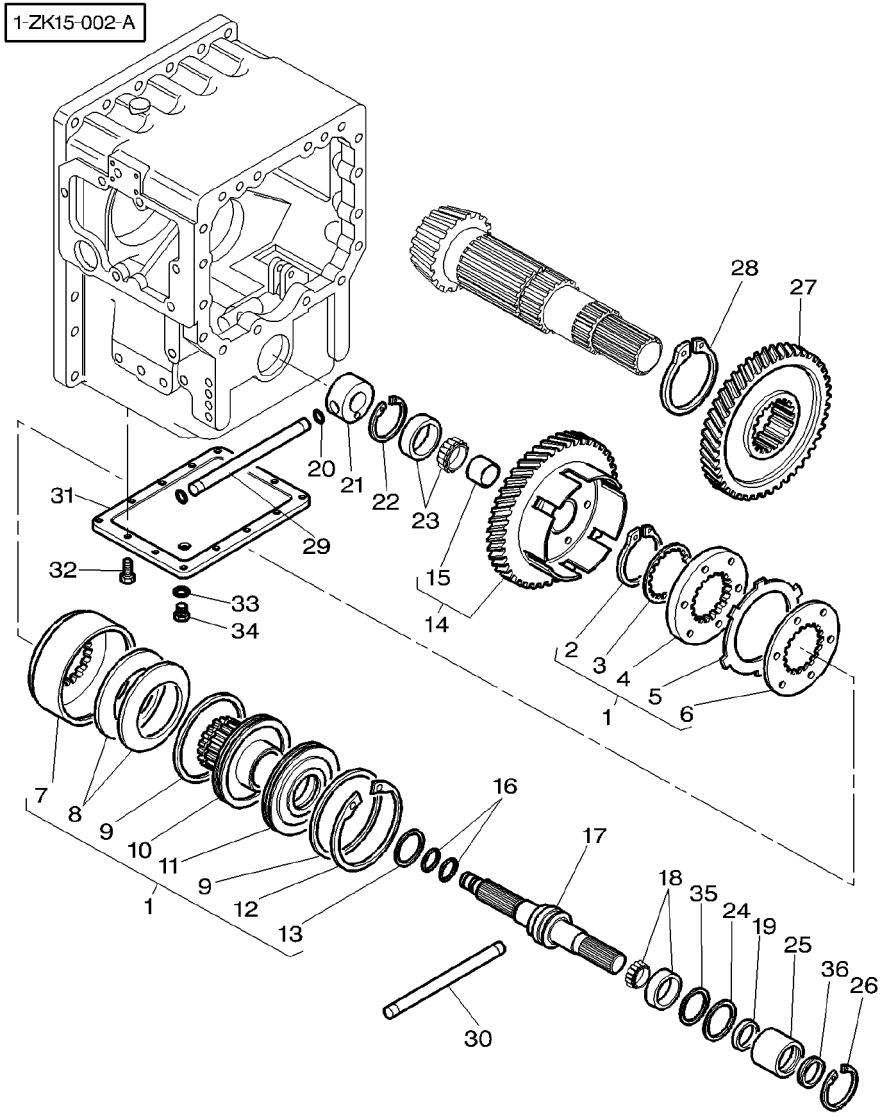

22	1440480X1		1	CIRCLIP	SEGMENT D ARRET ANELLO D'ARRESTO	SICHERUNGSRING CIRCULITO
23	339481X1		1	BEARING TAPER	ROULEMNT CONIQUE CUSCINETTO CONIC	KEGELLAGER RODAMIENTO CONI
24	**1441885X1**		1	O RING	JOINT TORIQUE ANELLO OR	O-RING JUNTA TORICA
25	3716815M3		1	SEALING HOLDER	PORTE JOINT PORTA TENUTA	DICHTRINGHALTER SOPORTE DE RETEN
26	1440819X1		1	CIRCLIP	SEGMENT D ARRET ANELLO D'ARRESTO	SICHERUNGSRING CIRCULITO
27	3716452M4	[B] 45	1	PINION	PIGNON PIGNONE	RITZEL PINON
27	3716531M4	[BG] 41 MF 8220	1	PINION	PIGNON PIGNONE	RITZEL PINON
28	1440533X1		1	CIRCLIP	SEGMENT D ARRET ANELLO D'ARRESTO	SICHERUNGSRING CIRCULITO
29	3716573M1	◀▶ 160 MM	1	TUBE	TUBE TUBO	ROHR TUBO
30	3716572M1	[D] ◀▶ 95 MM	1	TUBE	TUBE TUBO	ROHR TUBO
30	3716810M1	[E] ◀▶ 72MM	1	TUBE	TUBE TUBO	ROHR TUBO
31	3716553M2		1	COVER	COUVERCLE COPERCHIO	DECKEL CUBIERTA
32	3009493X1	M10x30	13	SCREW METRIC	VIS METRIQUE VITE METRICA	SCHRAUBE METR TORNILLO METRICO
33	831497M1		1	O RING	JOINT TORIQUE ANELLO OR	O-RING JUNTA TORICA
34	3716563M2		1	PLUG	BOUCHON TAPPO	VERSCHL.STOPFEN TAPON
35	3716801M1	⧗ 0,1 MM	X	CHOCK	CALE PASSACAVO	UNTERLEG-KEIL CALZA
35	3716802M1	⧗ 0,2 MM	X	CHOCK	CALE PASSACAVO	UNTERLEG-KEIL CALZA
35	3716803M1	⧗ 0,5 MM	X	CHOCK	CALE PASSACAVO	UNTERLEG-KEIL CALZA
35	3716804M1	⧗ 0,8 MM	X	CHOCK	CALE PASSACAVO	UNTERLEG-KEIL CALZA
36	3791400M1		1	GASKET	JOINT GUARNIZIONE	DICHTSCHEIBE EMPAQUETADURA.

[B] CLUTCH 6 DISCS
EMBRAYAGE 6 DISQUES
KUPPLUNG 6 BREMSSCHEIBES
ACCOPIAMENTO 6 DISCI
EMBRAGUE 6 DISCOS

[D] WITH FULL POWERSHIFT
AVEC FULL POWERSHIFT
MIT FULL POWERSHIFT
CON FULL POWERSHIFT
CON FULL POWERSHIFT

1-ZK15-002-A

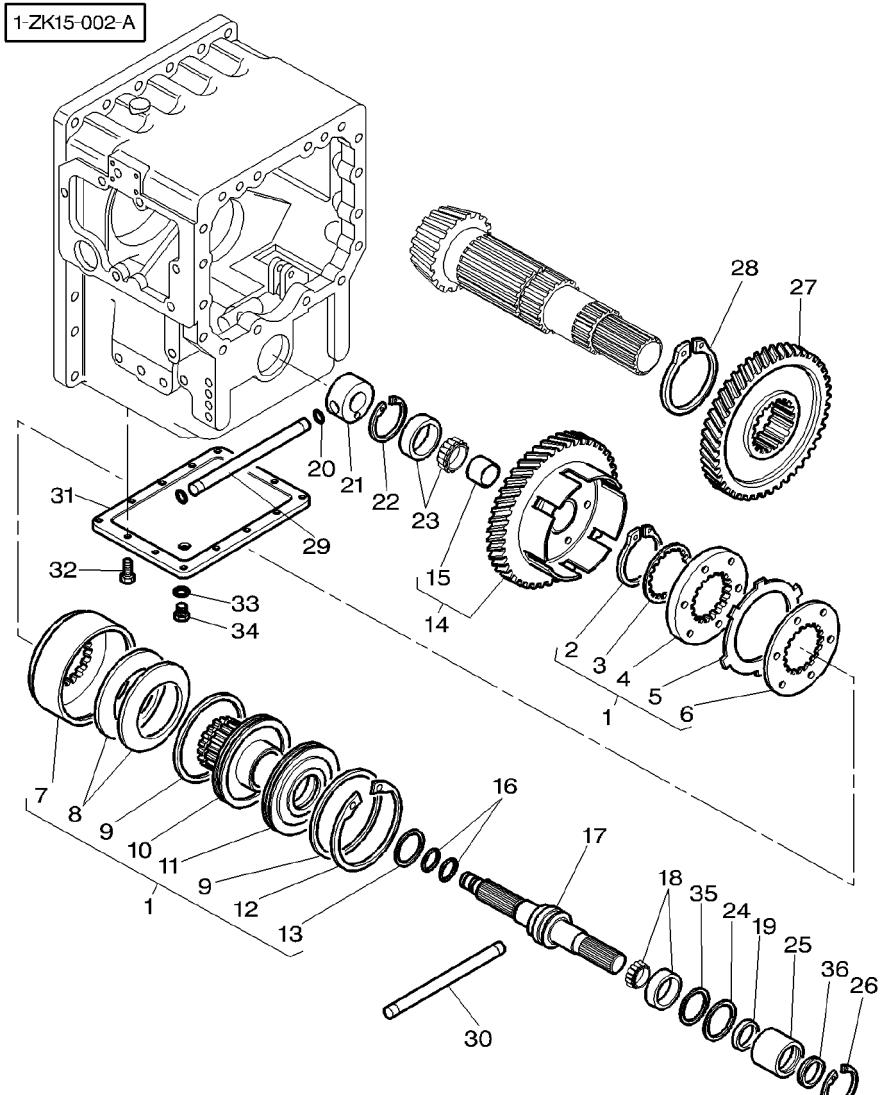

[E] WITH DYNASHIFT
AVEC DYNASHIFT
MIT DYNASHIFT
CON DYNASHIFT
CON DYNASHIFT

[G] FOR HIGH-CLEARANCE TRACTOR
POUR TRACTEUR HIGH-CLEARANCE
FUR SCHLEPPER HIGH-CLEARANCE
PER TRATTICE HIGH-CLEARANCE
PER TRACTOR HIGH-CLEARANCE

1-ZG63-003-A

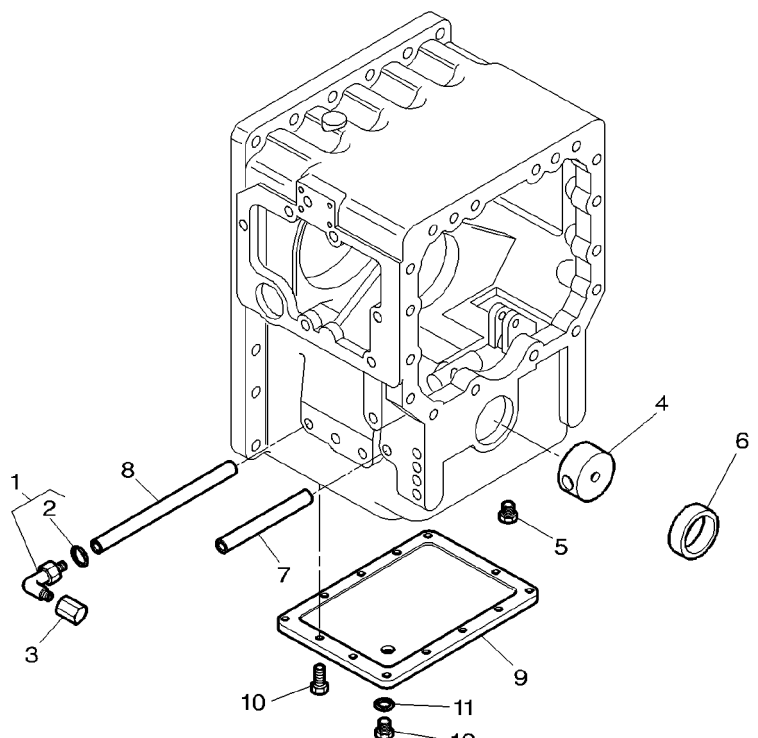

1	3385713M91		**1**	UNION	RACCORD RACCORDO	VERSCHRAUBUNG RACOR
2	831497M1	1	**1**	O RING	JOINT TORIQUE ANELLO OR	O−RING JUNTA TORICA
3	70923737		**1**	PLUG	BOUCHON TAPPO	VERSCHL.STOPFEN TAPON
4	3792324M1		**1**	BUSH	BAGUE BOCCOLA	BUCHSE CASQUILLO
5	390738X1	M12x16	**1**	BOLT METRIC	BOULON METRIQUE BULLONE METRICO	MASCH.SCHRB MET PERNO METRICO
6	3010664X1	∅ 68 MM	**1**	PLUG	BOUCHON TAPPO	VERSCHL.STOPFEN TAPON
7	3716810M1	[A] ◀▶ 72 MM	**1**	TUBE	TUBE TUBO	ROHR TUBO
7	3716572M1	[B] ◀▶ 95 MM	**1**	TUBE	TUBE TUBO	ROHR TUBO
8	3716573M1	◀▶ 160 MM	**1**	TUBE	TUBE TUBO	ROHR TUBO
9	3716553M2		**1**	COVER	COUVERCLE COPERCHIO	DECKEL CUBIERTA
10	3009493X1	M10x30	**13**	SCREW METRIC	VIS METRIQUE VITE METRICA	SCHRAUBE METR TORNILLO METRICO
11	831497M1		**1**	O RING	JOINT TORIQUE ANELLO OR	O−RING JUNTA TORICA
12	3716563M2		**1**	PLUG	BOUCHON TAPPO	VERSCHL.STOPFEN TAPON

[A] WITH DYNASHIFT
AVEC DYNASHIFT
MIT DYNASHIFT
CON DYNASHIFT
CON DYNASHIFT

[B] WITH FULL POWERSHIFT
AVEC FULL POWERSHIFT
MIT FULL POWERSHIFT
CON FULL POWERSHIFT
CON FULL POWERSHIFT

1-ZK12-001-B

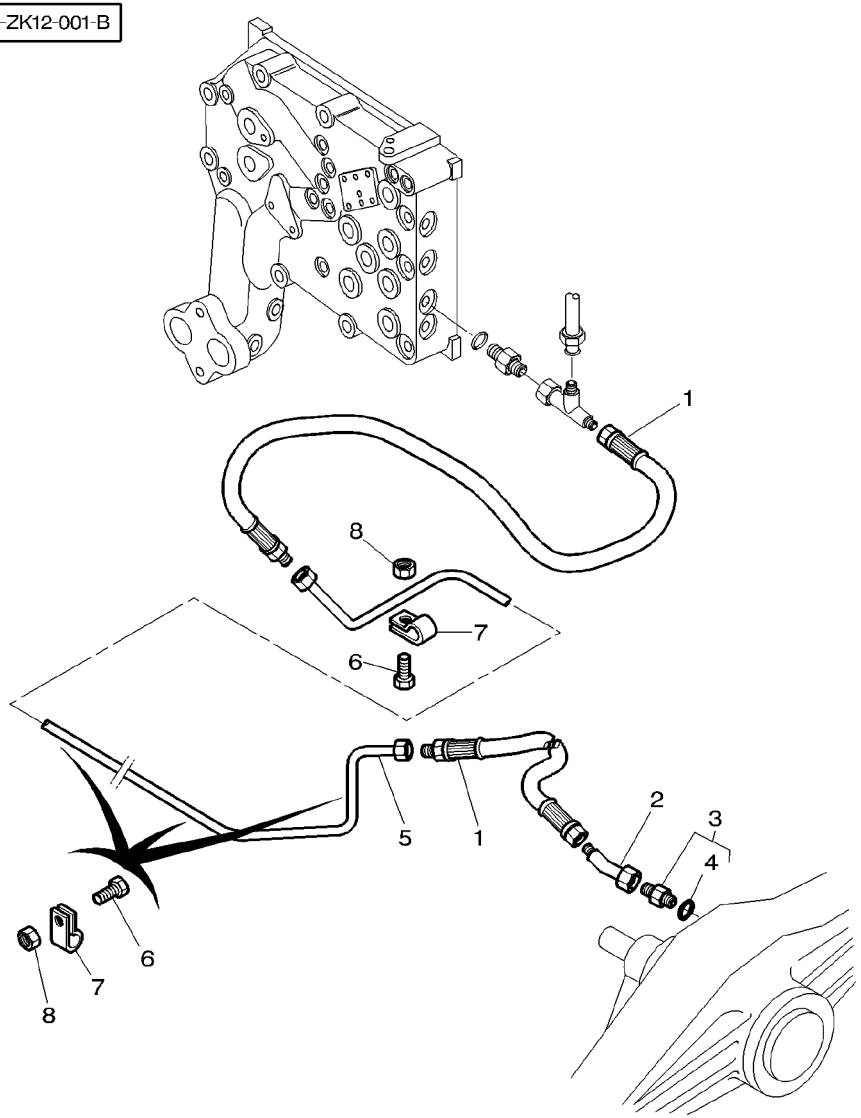

1	**3389702M1**		**2**	HYDR HOSE	FLEXIBLE TUBOFLEX IDRAUL	HYDR SCHLAUCH TUBO HIDRAULICO
2	366665X1		**1**	ELBOW	COUDE GOMITO	WINKELSTUECK CODO
3	3019700X91		**1**	UNION	RACCORD RACCORDO	VERSCHRAUBUNG RACOR
4	3019394X1	3	**1**	O RING	JOINT TORIQUE ANELLO OR	O−RING JUNTA TORICA
5	3784899M1	[A]	**1**	TUBING	TUBULURE TUBATURA	ROHRSTUTZEN TUBERIA
5	3781983M91	[B]	**1**	TUBING	TUBULURE TUBATURA	ROHRSTUTZEN TUBERIA
6	339560X1	M6X16	**4**	SCREW METRIC	VIS METRIQUE VITE METRICA	SCHRAUBE METR TORNILLO METRICO
7	3389841M1		**4**	CLAMP	COLLIER FASCETTA	HALTESCHELLE ABRAZADERA
8	339030X1	M6	**4**	NUT METRIC	ECROU METRIQUE DADO METRICO	MUTTER METRISCH TUERCA METRICO

[A] WITH DYNASHIFT
AVEC DYNASHIFT
MIT DYNASHIFT
CON DYNASHIFT
CON DYNASHIFT

[B] WITH FULL POWERSHIFT
AVEC FULL POWERSHIFT
MIT FULL POWERSHIFT
CON FULL POWERSHIFT
CON FULL POWERSHIFT

Guard And Transmission Shaft
Garant Et Arbre De Transmission
Schutz Und Allradantriebswelle
Riparo E Albero Trasmissione
Defensa Y Arbol De Transmision

60-65

1-ZK11-001-C

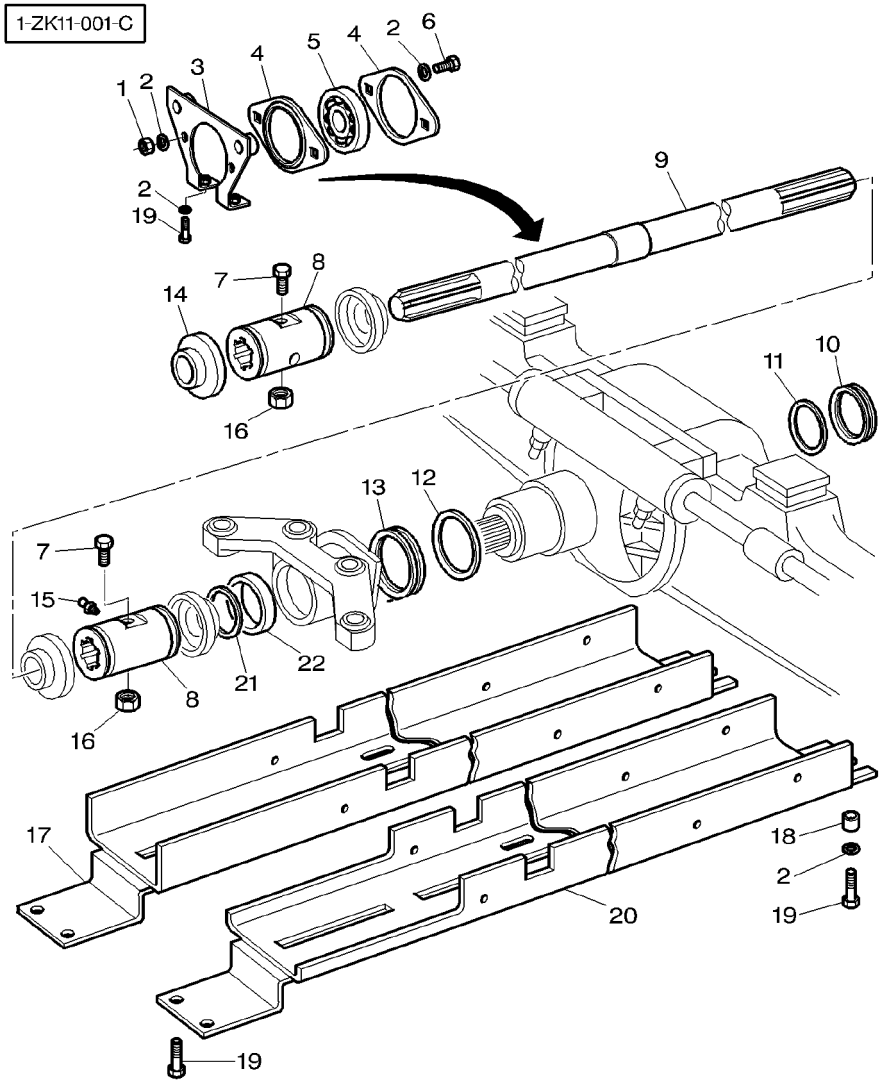

1	339402X1		**2**	NUT METRIC	ECROU METRIQUE DADO METRICO	MUTTER METRISCH TUERCA METRICO
2	390597X1		**8**	WASHER METRIC	RONDELLE METR. RONDELLA METRICO	SCHEIBE METRISCH ARANDELA METRICO
3	3777216M1		**1**	BEARER	SUPPORT PALIER SUPPORTO PORTANT	AUFLAGER DISPOS.PORTADOR
4	3712872M1		**2**	BEARING CARRIER	PALIER CUSCINETTO SUPP-	LAGER-GEHAEUSE TEJUELO
5	3712873M1		**1**	BEARING ASSY	ROULEMENT CUSCINETTO COMPL	RADIALLAGER RODAMIENTO RAD
6	3009493X1	M10X30	**2**	SCREW METRIC	VIS METRIQUE VITE METRICA	SCHRAUBE METR TORNILLO METRICO
7	1440922X1	M6X60	**2**	BOLT	BOULON BULLONE	MASCH.SCHRAUBE PERNO
8	3714416M2		**2**	SLEEVE	MANCHON MANICOTTO	HUELSE MANCHA
9	3777219M2	◄► 1779MM	**1**	SHAFT	ARBRE ALBERO	WELLE ARBOL
10	3712074M1		**1**	GASKET	JOINT GUARNIZIONE	DICHTSCHEIBE EMPAQUETADURA.
11	3712077M1		**1**	WASHER	RONDELLE RONDELLA	UNTERLEGSCHEIBE ARANDELA
12	3712076M1		**1**	BUSH	BAGUE BOCCOLA	BUCHSE CASQUILLO
13	3712073M1		**1**	GASKET	JOINT GUARNIZIONE	DICHTSCHEIBE EMPAQUETADURA.
14	3714575M1		**4**	BELLOWS	SOUFFLET SOFFIETTO	FALTENBALG FUELLE
15	1441858X1		**2**	GREASER	GRAISSEUR INGRASSATORE	FETTNIPPEL ENGRASADOR
16	339030X1	M6	**2**	NUT METRIC	ECROU METRIQUE DADO METRICO	MUTTER METRISCH TUERCA METRICO
17	3783841M1	[A] ⇨ 3782591M3	**1**	COWL	GARANT CAPPOTTATURA	AUFSATZ CAPERUZA
18	3042637M2		**2**	SPACER	ENTRETOISE DISTANZIALE	ABSTANDSTUECK PIEZA DISTANCIA
19	392054X1	M10X22	**6**	SCREW	VIS VITE	SCHRAUBE TORNILLO
20	3783842M1	[B] ⇨ 3782592M2	**1**	COWL	GARANT CAPPOTTATURA	AUFSATZ CAPERUZA
21	3010868X1		**1**	O RING	JOINT TORIQUE ANELLO OR	O-RING JUNTA TORICA
22	3781307M2		**1**	SPACER	ENTRETOISE DISTANZIALE	ABSTANDSTUECK PIEZA DISTANCIA

[A] WITH DYNASHIFT
AVEC DYNASHIFT
MIT DYNASHIFT
CON DYNASHIFT
CON DYNASHIFT

1-ZK11-001-C

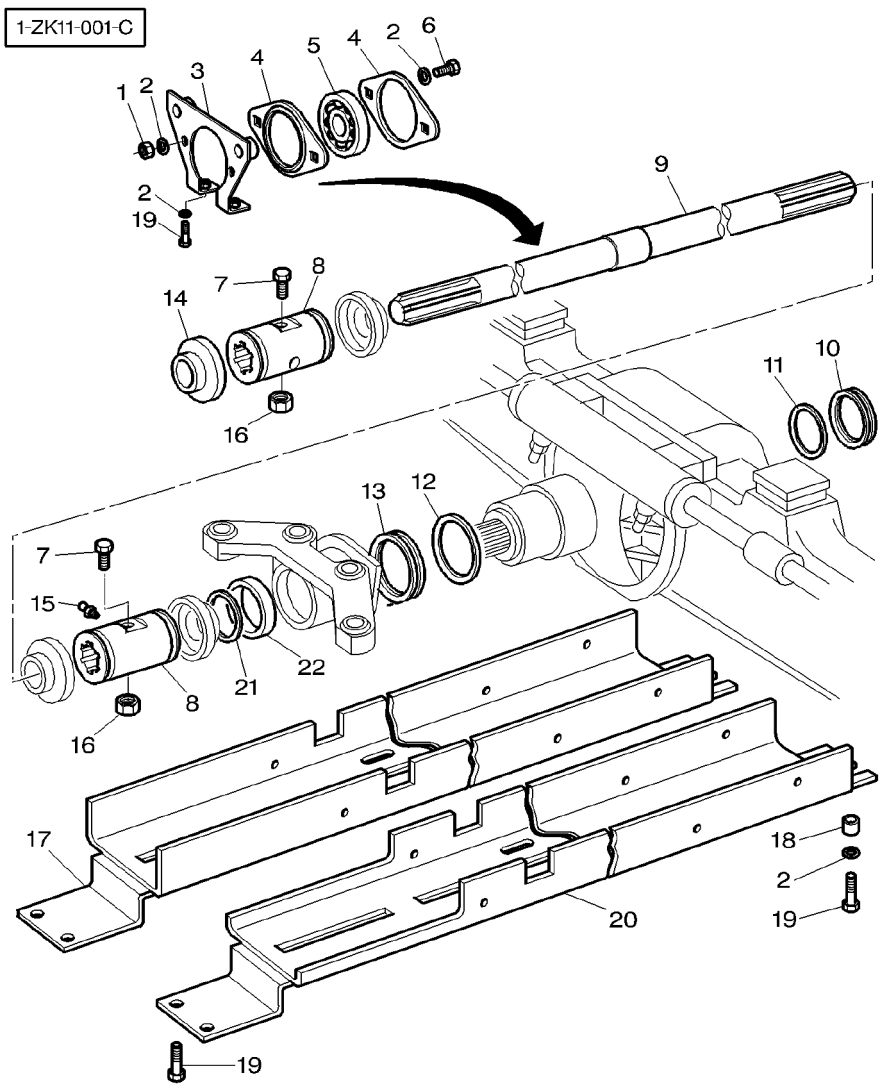

[B] WITH FULL POWERSHIFT
AVEC FULL POWERSHIFT
MIT FULL POWERSHIFT
CON FULL POWERSHIFT
CON FULL POWERSHIFT

Front Axle 4 Wheel Drive
Essieu Avant 4 Roues Motrices
Vorderachse Allradantrieb
Assale Anteriore 4 Ruote Motrici
Eje Delantero 4 Ruedas Motrices

60-70

1-ZK01-001-A

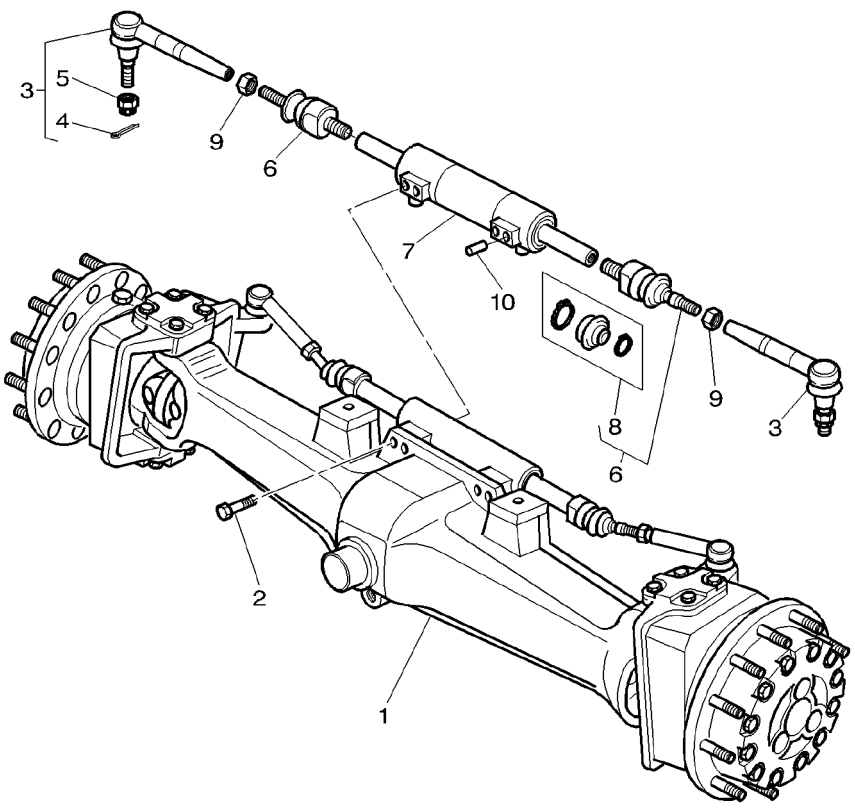

1	3764955M91	TYPE AG 155	**1**	FRONT LIVE AXLE	PONT AVANT ASSALE−ANTERIORE	ALLRADACHSE VORN EJE MANDO DELANT
2	3764202M1	1	**4**	BOLT	BOULON BULLONE	MASCH.SCHRAUBE PERNO
3	***3764286M1***	1	**2**	TOGGLE	ROTULE ROTULA	GELENKZAPFEN PERNO ENGANCHE
4	354083X1	3	**1**	PIN	GOUPILLE PERNO	BOLZEN PASADOR
5	391233X1	3 M24	**1**	NUT METRIC	ECROU METRIQUE DADO METRICO	MUTTER METRISCH TUERCA METRICO
6	3426255M1	1	**2**	BALL JOINT	JOINT SPHERIQUE GIUNTO SFERICO	KUGELGELENK UNION ROTULA
7	3429759M93	1	**1**	STEERING CYL	VERIN DIRECTION CILINDRO STERZO	LENKZYLINDER CILINDRO DIRECC
8	3311603M91	6	**1**	KIT, REPAIR	JEU REPARATION KIT RIPARAZIONE	REPARATURSATZ JUEGO REPARACION
9	392420X1	1 M18X1,5	**2**	NUT	ECROU DADO	MUTTER TUERCA
10	3764700M1	1	**1**	DOWEL	PLOT SPINA	ZYLINDERSTIFT CENTRAJE

1-ZK13-001-A

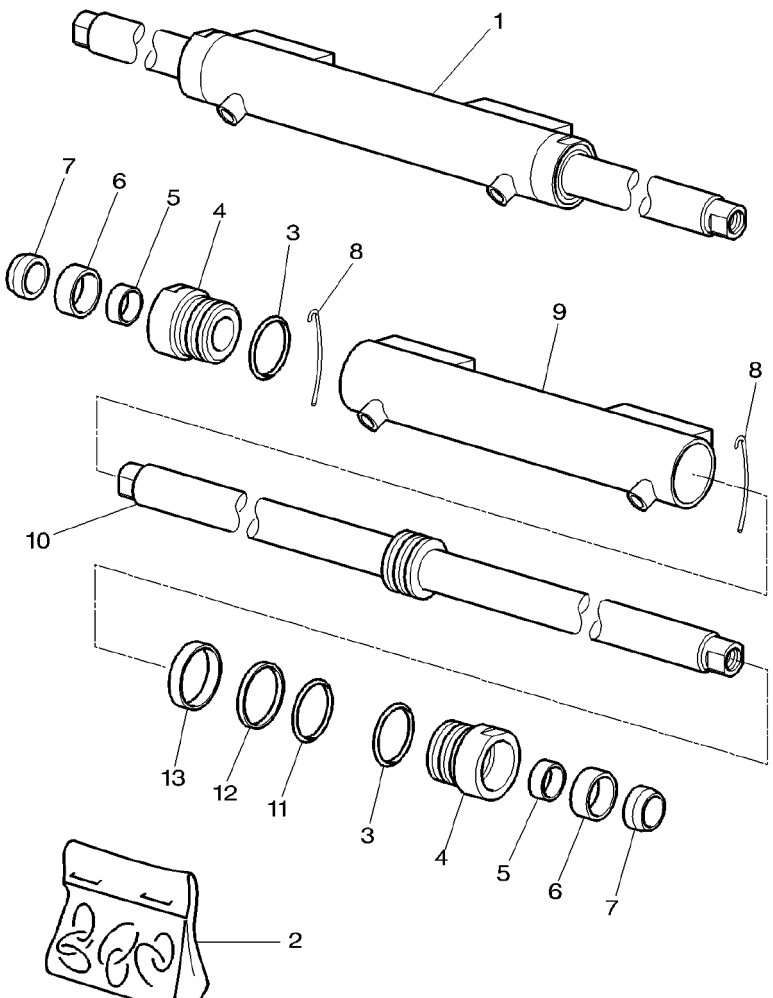

1	3429759M93			1	STEERING CYL	VERIN DIRECTION CILINDRO STERZO	LENKZYLINDER CILINDRO DIRECC
2	3624903M91			X	KIT, SEAL	JEU ETANCHEITE KIT TENUTA	DICHTRINGSATZ RETENES JUEGO
3		2	REF.2	2	O RING	JOINT TORIQUE ANELLO OR	O-RING JUNTA TORICA
4	3624902M91	1		2	GUIDE BUSH	BAGUE GUIDE BUSSOLA GUIDA	FUEHRUNGSBUCHSE CASQUILLO GUIA
5		2	REF.2	2	RING	ANNEAU ANELLO	RING ARO
6		2	REF.2	2	SEAL	JOINT ETANCHEITE PARAOLIO	DICHTRING RETEN
7		2	REF.2	2	WIPER	ESSUYEUR SPAZZOLA VETRI	WISCHER LIMPIADOR
8	1605415M1	1		2	RING	ANNEAU ANELLO	RING ARO
9		1	REF.1	1	BARREL	CORPS CYLINDRE CANNA	ZYLINDERGEHAEUSE CUERPO CILINDRO
10	3623923M91	1		1	CYLINDER ROD	TIGE DE VERIN ASTA CILINDRO	KOLBENSTANGE BIELA DE CILINDR
11		2	REF.2	1	O RING	JOINT TORIQUE ANELLO OR	O-RING JUNTA TORICA
12		2	REF.2	1	SEAL	JOINT ETANCHEITE PARAOLIO	DICHTRING RETEN
13		2	REF.2	1	SEAL	JOINT ETANCHEITE PARAOLIO	DICHTRING RETEN

Front Axle 4 Wheel Drive	Housing
Essieu Avant 4 Roues Motrices	Carter
Vorderachse Allradantrieb	Gehaeuse
Assale Anteriore 4 Ruote Motrici	Carcassa
Eje Delantero 4 Ruedas Motrices	Carter

60-80

1-ZK03-001-A

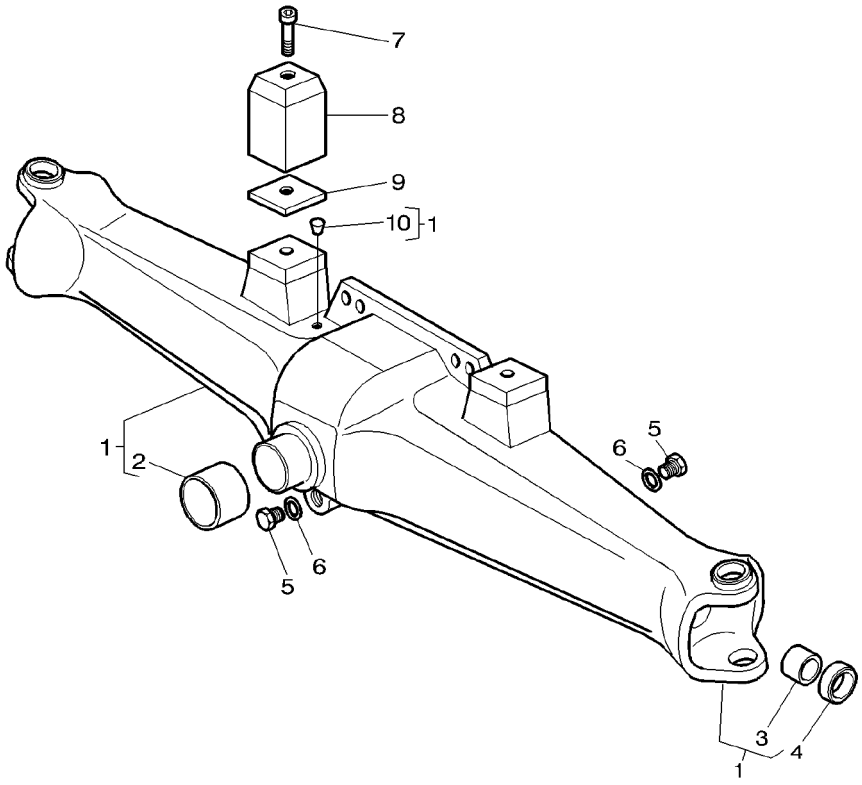

1	3429948M95		**1**	HOUSING	CARTER CARCASSA	GEHAEUSE ALOJAMIENTO
2	3428657M3	1	**1**	BUSH	BAGUE BOCCOLA	BUCHSE CASQUILLO
3	3426938M1	1	**2**	BUSH	BAGUE BOCCOLA	BUCHSE CASQUILLO
4	3428064M1	40X60X18,5	**2**	SEAL	JOINT ETANCHEITE PARAOLIO	DICHTRING RETEN
5	3429400M1		**2**	PLUG	BOUCHON TAPPO	VERSCHL.STOPFEN TAPON
6	3427185M1		**2**	WASHER	RONDELLE RONDELLA	UNTERLEGSCHEIBE ARANDELA
7	3009296X1	[A] M10X80	**2**	SCREW	VIS VITE	SCHRAUBE TORNILLO
7	3008120X1	M10X80	**2**	SCREW	VIS VITE	SCHRAUBE TORNILLO
7	3010046X1	M10X95	**2**	SCREW	VIS VITE	SCHRAUBE TORNILLO
8	3616572M1	⧗ 59MM	**2**	SPACER	ENTRETOISE DISTANZIALE	ABSTANDSTUECK PIEZA DISTANCIA
8	3616573M1	⧗ 76,5MM	**2**	SPACER	ENTRETOISE DISTANZIALE	ABSTANDSTUECK PIEZA DISTANCIA
9	3580720M1		**2**	SPACER	ENTRETOISE DISTANZIALE	ABSTANDSTUECK PIEZA DISTANCIA
10	1442560X1	1	**1**	PLUG	BOUCHON TAPPO	VERSCHL.STOPFEN TAPON

[A] USED ONLY WITH 3580720M1
UTILISER SEULEMENT AVEC 3580720M1
NUR FUER MIT 3580720M1
USATO SOLO CON 3580720M1
USADO SOLAMENTE CON 3580720M1

1-ZK04-008-A

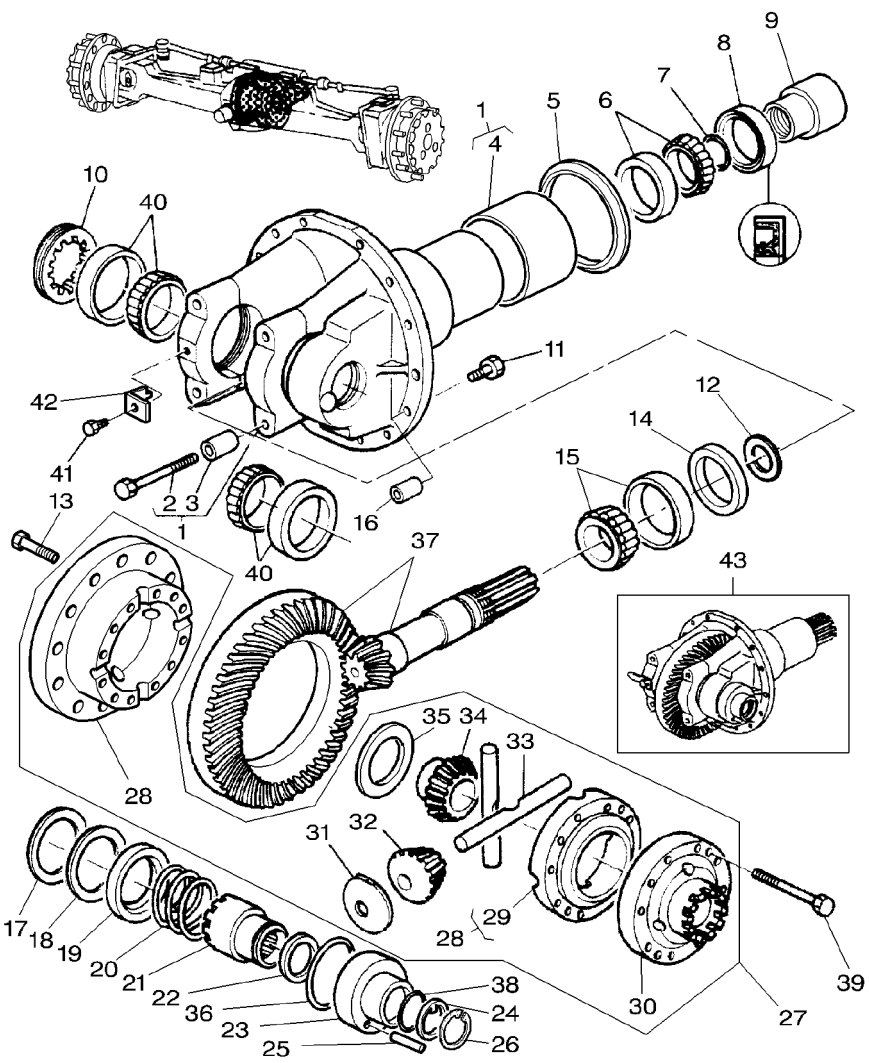

1	3764967M91			1	SUPPORT	SUPPORT SUPPORTO	LAGERUNG DISPOS.DE SOSTEN
2	3019856X1	1 M12X80		4	BOLT METRIC	BOULON METRIQUE BULLONE METRICO	MASCH.SCHRB MET PERNO METRICO
3	3427445M1	1		4	DOWEL	PLOT SPINA	ZYLINDERSTIFT CENTRAJE
4	3429920M2	1		1	BUSH	BAGUE BOCCOLA	BUCHSE CASQUILLO
5	3429921M1			1	FLANGE	FLASQUE FLANGIA	FLANSCH PLETINA
6	3764160M1			1	BEARING BALL	ROULEMENT BILLES CUSCINETTO SFERE	KUGELLAGER COJINETE DE BOLA
7	366434X1	2,62X34,59		1	O RING	JOINT TORIQUE ANELLO OR	O-RING JUNTA TORICA
8	3428314M1	65X92X18		1	SEAL	JOINT ETANCHEITE PARAOLIO	DICHTRING RETEN
9	3764466M1			1	NUT	ECROU DADO	MUTTER TUERCA
10	3427462M1			1	FERRULE	VIROLE GHIERA	ZWINGE MANGTO METALICO
11	3764103M1			12	SCREW	VIS VITE	SCHRAUBE TORNILLO
12	3429678M1	⧗ 0,10MM		X	SHIM	CALE REGLAGE SPESSORE	EINSTELLBLECH CALCE
12	3429679M1	⧗ 0,15MM		X	SHIM	CALE REGLAGE SPESSORE	EINSTELLBLECH CALCE
12	3429680M1	⧗ 0,30MM		X	SHIM	CALE REGLAGE SPESSORE	EINSTELLBLECH CALCE
12	3429681M1	⧗ 0,50MM		X	SHIM	CALE REGLAGE SPESSORE	EINSTELLBLECH CALCE
12	3429682M1	⧗ 0,70MM		X	SHIM	CALE REGLAGE SPESSORE	EINSTELLBLECH CALCE
12	3429683M1	⧗ 1MM		X	SHIM	CALE REGLAGE SPESSORE	EINSTELLBLECH CALCE
13	3764973M1	M12X35		12	SCREW	VIS VITE	SCHRAUBE TORNILLO
14	3764216M1	⧗ 6 MM		X	SPACER	ENTRETOISE DISTANZIALE	ABSTANDSTUECK PIEZA DISTANCIA
14	3764217M1	⧗ 6,03MM		X	SPACER	ENTRETOISE DISTANZIALE	ABSTANDSTUECK PIEZA DISTANCIA
14	3764218M1	⧗ 6,06MM		X	SPACER	ENTRETOISE DISTANZIALE	ABSTANDSTUECK PIEZA DISTANCIA
14	3764219M1	⧗ 6,09MM		X	SPACER	ENTRETOISE DISTANZIALE	ABSTANDSTUECK PIEZA DISTANCIA
14	3764220M1	⧗ 6,12MM		X	SPACER	ENTRETOISE DISTANZIALE	ABSTANDSTUECK PIEZA DISTANCIA
14	3764221M1	⧗ 6,15MM		X	SPACER	ENTRETOISE DISTANZIALE	ABSTANDSTUECK PIEZA DISTANCIA
14	3764222M1	⧗ 6,18MM		X	SPACER	ENTRETOISE DISTANZIALE	ABSTANDSTUECK PIEZA DISTANCIA
14	3764223M1	⧗ 6,21MM		X	SPACER	ENTRETOISE DISTANZIALE	ABSTANDSTUECK PIEZA DISTANCIA

1-ZK04-008-A

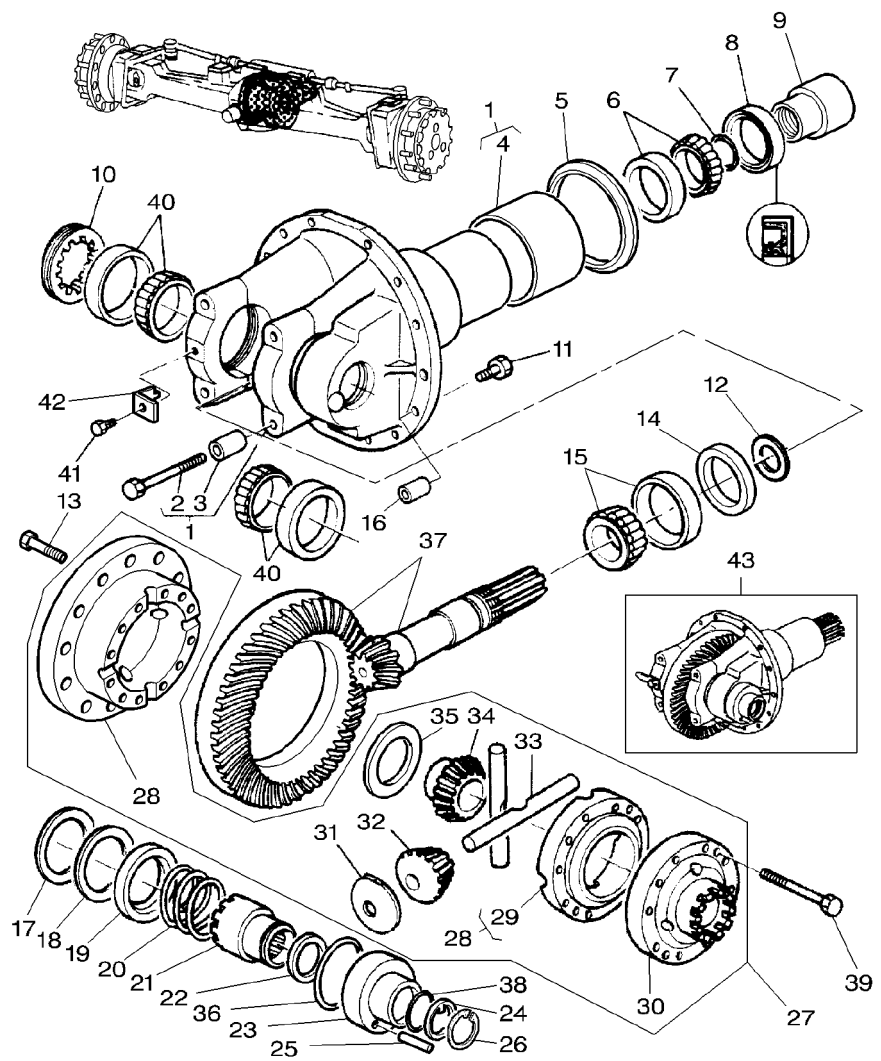

14	3764224M1	⧗	6,24MM	X	SPACER	ENTRETOISE / DISTANZIALE / PIEZA DISTANCIA / ABSTANDSTUECK
14	3764225M1	⧗	6,27MM	X	SPACER	ENTRETOISE / DISTANZIALE / PIEZA DISTANCIA / ABSTANDSTUECK
14	3764226M1	⧗	6,30MM	X	SPACER	ENTRETOISE / DISTANZIALE / PIEZA DISTANCIA / ABSTANDSTUECK
14	3764227M1	⧗	6,33MM	X	SPACER	ENTRETOISE / DISTANZIALE / PIEZA DISTANCIA / ABSTANDSTUECK
14	3764228M1	⧗	6,36MM	X	SPACER	ENTRETOISE / DISTANZIALE / PIEZA DISTANCIA / ABSTANDSTUECK
14	3764229M1	⧗	6,39MM	X	SPACER	ENTRETOISE / DISTANZIALE / PIEZA DISTANCIA / ABSTANDSTUECK
14	3764230M1	⧗	6,42MM	X	SPACER	ENTRETOISE / DISTANZIALE / PIEZA DISTANCIA / ABSTANDSTUECK
14	3764231M1	⧗	6,45MM	X	SPACER	ENTRETOISE / DISTANZIALE / PIEZA DISTANCIA / ABSTANDSTUECK
14	3764232M1	⧗	6,48MM	X	SPACER	ENTRETOISE / DISTANZIALE / PIEZA DISTANCIA / ABSTANDSTUECK
14	3764233M1	⧗	6,51MM	X	SPACER	ENTRETOISE / DISTANZIALE / PIEZA DISTANCIA / ABSTANDSTUECK
14	3764234M1	⧗	6,54MM	X	SPACER	ENTRETOISE / DISTANZIALE / PIEZA DISTANCIA / ABSTANDSTUECK
14	3764235M1	⧗	6,57MM	X	SPACER	ENTRETOISE / DISTANZIALE / PIEZA DISTANCIA / ABSTANDSTUECK
14	3764236M1	⧗	6,60MM	X	SPACER	ENTRETOISE / DISTANZIALE / PIEZA DISTANCIA / ABSTANDSTUECK
14	3764237M1	⧗	6,63MM	X	SPACER	ENTRETOISE / DISTANZIALE / PIEZA DISTANCIA / ABSTANDSTUECK
14	3764238M1	⧗	6,66MM	X	SPACER	ENTRETOISE / DISTANZIALE / PIEZA DISTANCIA / ABSTANDSTUECK
14	3764239M1	⧗	6,69MM	X	SPACER	ENTRETOISE / DISTANZIALE / PIEZA DISTANCIA / ABSTANDSTUECK
14	3764240M1	⧗	6,72MM	X	SPACER	ENTRETOISE / DISTANZIALE / PIEZA DISTANCIA / ABSTANDSTUECK
14	3764241M1	⧗	6,75MM	X	SPACER	ENTRETOISE / DISTANZIALE / PIEZA DISTANCIA / ABSTANDSTUECK
14	3764242M1	⧗	6,78MM	X	SPACER	ENTRETOISE / DISTANZIALE / PIEZA DISTANCIA / ABSTANDSTUECK
14	3764243M1	⧗	7,03MM	X	SPACER	ENTRETOISE / DISTANZIALE / PIEZA DISTANCIA / ABSTANDSTUECK
15	3429676M1			1	BEARING BALL	ROULEMENT BILLES / CUSCINETTO SFERE / KUGELLAGER / COJINETE DE BOLA
16	3426266M1			2	SPACER	ENTRETOISE / DISTANZIALE / PIEZA DISTANCIA / ABSTANDSTUECK
17	3427281M1	⧗	0,10MM	X	SHIM	CALE REGLAGE / SPESSORE / CALCE / EINSTELLBLECH
17	3427282M1	⧗	0,15MM	X	SHIM	CALE REGLAGE / SPESSORE / CALCE / EINSTELLBLECH
17	3427283M1	⧗	0,30MM	X	SHIM	CALE REGLAGE / SPESSORE / CALCE / EINSTELLBLECH
17	3427284M1	⧗	0,50MM	X	SHIM	CALE REGLAGE / SPESSORE / CALCE / EINSTELLBLECH

1-ZK04-008-A

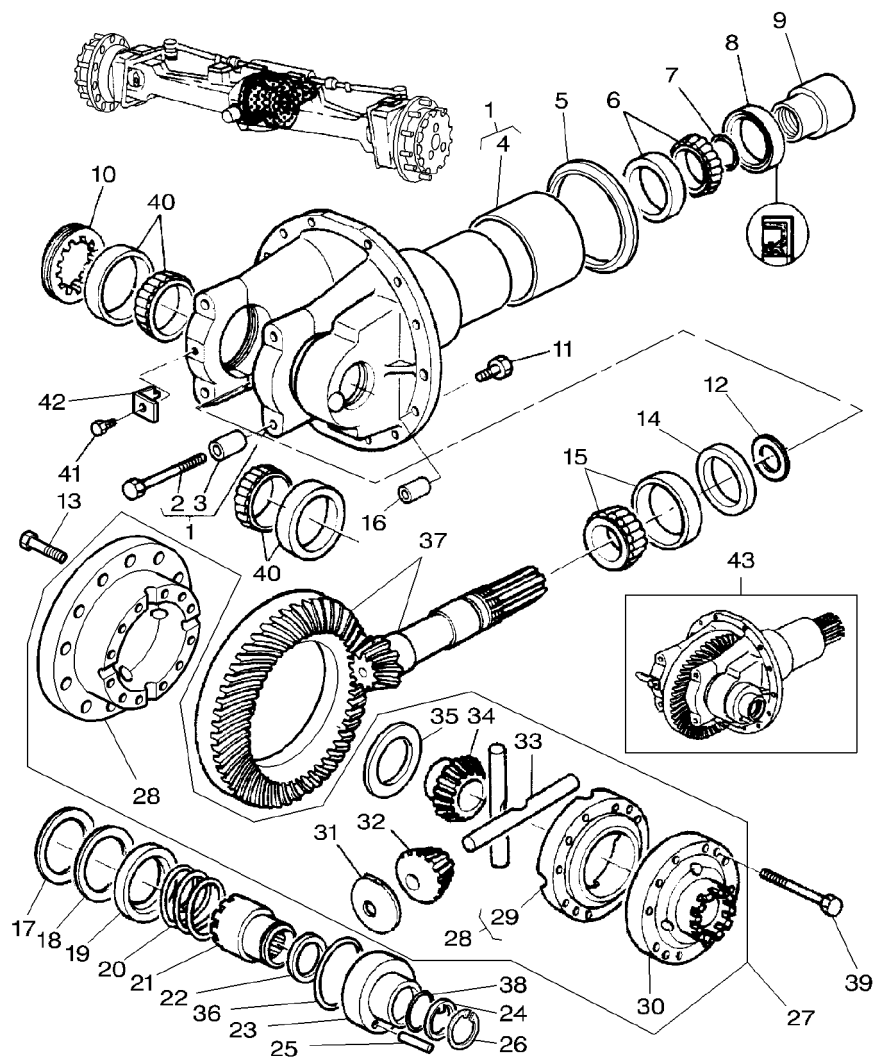

17	3427285M1	⧗ 0,70MM	X	SHIM	CALE REGLAGE SPESSORE	EINSTELLBLECH CALCE
17	3427286M1	⧗ 1MM	X	SHIM	CALE REGLAGE SPESSORE	EINSTELLBLECH CALCE
18	3427079M1		1	SPACER	ENTRETOISE DISTANZIALE	ABSTANDSTUECK PIEZA DISTANCIA
19	3427839M1		1	GUIDE	GUIDE GUIDA	FUEHRUNG GUIA
20	3427313M1		1	SPRING	RESSORT MOLLA	FEDER MUELLE
21	3427838M1		1	SLEEVE	MANCHON MANICOTTO	HUELSE MANCHA
22	3427443M1		1	WASHER	RONDELLE RONDELLA	UNTERLEGSCHEIBE ARANDELA
23	3427460M1		1	PISTON	PISTON PISTONE	KOLBEN PISTON
24	3427463M1		1	WASHER	RONDELLE RONDELLA	UNTERLEGSCHEIBE ARANDELA
25	3427444M1		1	DOWEL	PLOT SPINA	ZYLINDERSTIFT CENTRAJE
26	1442697X1		1	CIRCLIP	SEGMENT D ARRET ANELLO D'ARRESTO	SICHERUNGSRING CIRCULITO
27	3764970M91		1	DIFFERENTIAL	DIFFERENTIEL DIFFERENZIALE	DIFFERENTIAL DIFERENCIAL
28	3764971M91	27	1	HOUSING	CARTER CARCASSA	GEHAEUSE ALOJAMIENTO
29		28 ■ REF.28	1	HOUSING	CARTER CARCASSA	GEHAEUSE ALOJAMIENTO
30	3427837M2	27	1	FLANGE	FLASQUE FLANGIA	FLANSCH PLETINA
31	3764851M1	27	4	WASHER	RONDELLE RONDELLA	UNTERLEGSCHEIBE ARANDELA
32		27 ■ 3427815M92	4	DIFF PINION	SATELLITE PIGNONE DIFFEREN	DIFF.KEGELRAD PINON DIFERENC
33	3428408M1	27	2	CLEVIS PIN	AXE PERNO D'ATTACCO	SPLINTBOLZEN BULON CILINDRICO
34		27 ■ 3427815M92	2	PLANET	PLANETAIRE PLANETARIO	PLANETENRAD PLANETARIO
35	3764874M1	27	2	WASHER	RONDELLE RONDELLA	UNTERLEGSCHEIBE ARANDELA
36	359236X1	97,79X5,33	1	O RING	JOINT TORIQUE ANELLO OR	O-RING JUNTA TORICA
37	3764965M91	9X37	1	KIT, BEVEL GEAR	COUPLE CONIQUE KIT COPPIA CONIC	KEGELRADSATZ CORONA Y PINON
38	3019927X1	60,33X3,53	1	O RING	JOINT TORIQUE ANELLO OR	O-RING JUNTA TORICA
39	3764974M1	M10X55	12	SCREW	VIS VITE	SCHRAUBE TORNILLO
40	391339X1		2	BEARING BUSH	BAGUE ROULEMENT BOCCOLA CUSCINET	LAGERBUCHSE BUJE DE COJINETE
41	1444071X1	M8X8	1	SCREW	VIS VITE	SCHRAUBE TORNILLO

1-ZK04-008-A

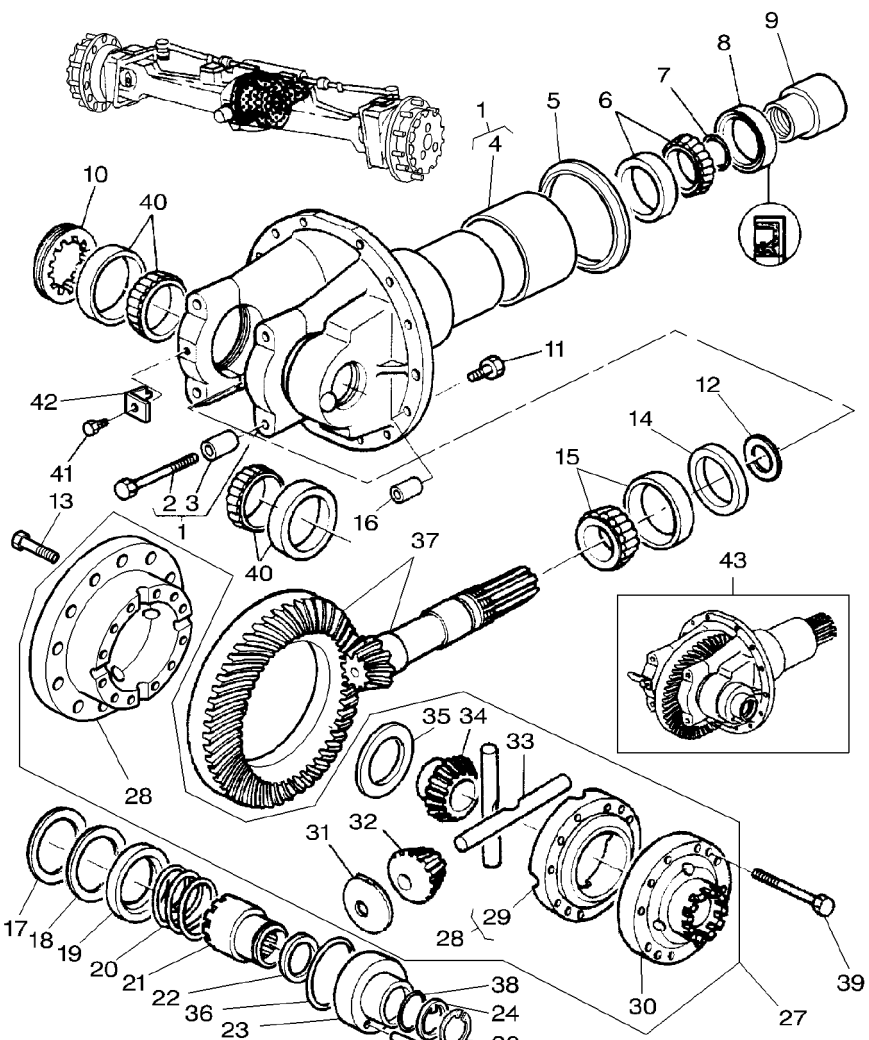

42	3427466M1	1	LOCKING PLATE	PLAQUE BLOCAGE PIASTRA DI FERMO	SICH.BLECH PLACA DE BLOCAJE
43	3765790M91	1	DIFFERENTIAL	DIFFERENTIEL DIFFERENZIALE	DIFFERENTIAL DIFERENCIAL

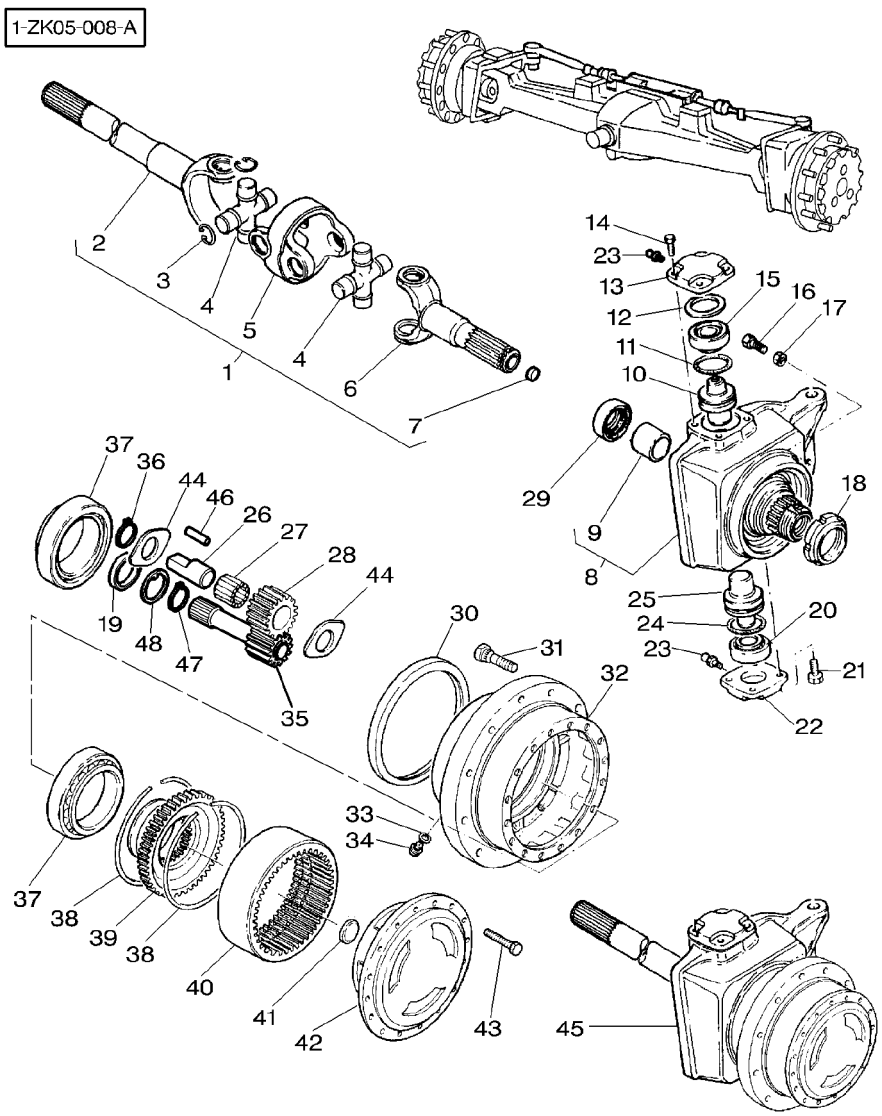

1	3764872M91	▶	**1**	UNIVERSAL JOINT	CARDAN GIUNTO UNIVERSAL	KARDANGELENK CRUCETA CARDAN
1	3764873M91	◀	**1**	UNIVERSAL JOINT	CARDAN GIUNTO UNIVERSAL	KARDANGELENK CRUCETA CARDAN
2	3429957M1	1 ▶ BTB	**1**	YOKE	CHAPE ARTICULAT FORCELLA	GELENKGABEL YUGO
2	3764886M1	1 ▶ DBM	**1**	FORK	FOURCHETTE FORCA	GABEL HORQUILLA
2	3429956M1	1 ◀ BTB	**1**	YOKE	CHAPE ARTICULAT FORCELLA	GELENKGABEL YUGO
2	3764882M1	1 ◀ DBM	**1**	FORK	FOURCHETTE FORCA	GABEL HORQUILLA
3	1442486X1	1	**8**	CIRCLIP	SEGMENT D ARRET ANELLO D'ARRESTO	SICHERUNGSRING CIRCULITO
4	**3428155M91**	1 BTB	**2**	CROSSPIECE	CROISILLON TRAVERSA	KREUZSTUECK PIEZA TRANSVERSA
4	3764883M91	1 DBM	**2**	CROSSPIECE	CROISILLON TRAVERSA	KREUZSTUECK PIEZA TRANSVERSA
5	3428156M1	1 BTB	**1**	BODY	CORPS CORPO	KOERPER CUERPO
5	3764885M1	1 DBM	**1**	KNUCKLE	NOIX ARTICOLAZIONE	GELENK CHARNELA
6	3764961M1	1 BTB	**1**	FORK	FOURCHETTE FORCA	GABEL HORQUILLA
6	3764857M1	1 DBM	**1**	FORK	FOURCHETTE FORCA	GABEL HORQUILLA
7	3764962M1	1 BTB	**1**	TAP	OBTURATEUR TAPPO*	HAHN GRIFO
7	3764878M1	1 DBM	**1**	TAP	OBTURATEUR TAPPO*	HAHN GRIFO
8	3764855M91	◀	**1**	HOUSING	CARTER CARCASSA	GEHAEUSE ALOJAMIENTO
8	3764853M91	▶	**1**	HOUSING	CARTER CARCASSA	GEHAEUSE ALOJAMIENTO
9	3764875M1	8	**1**	BUSH	BAGUE BOCCOLA	BUCHSE CASQUILLO
10	3429864M1		**2**	PIVOT	PIVOT CARDINE	DREHZAPFEN PIVOTE
11	3429318M1		**2**	GASKET	JOINT GUARNIZIONE	DICHTSCHEIBE EMPAQUETADURA.
12	3428723M1	⧗ 0,15MM	**X**	SHIM	CALE REGLAGE SPESSORE	EINSTELLBLECH CALCE
12	3428722M1	⧗ 0,10MM	**X**	SHIM	CALE REGLAGE SPESSORE	EINSTELLBLECH CALCE
12	3428724M1	⧗ 0,30MM	**X**	SHIM	CALE REGLAGE SPESSORE	EINSTELLBLECH CALCE
12	3428725M1	⧗ 0,50MM	**X**	SHIM	CALE REGLAGE SPESSORE	EINSTELLBLECH CALCE
12	3428726M1	⧗ 0,70MM	**X**	SHIM	CALE REGLAGE SPESSORE	EINSTELLBLECH CALCE
12	3428727M1	⧗ 1MM	**X**	SHIM	CALE REGLAGE SPESSORE	EINSTELLBLECH CALCE

1-ZK05-008-A

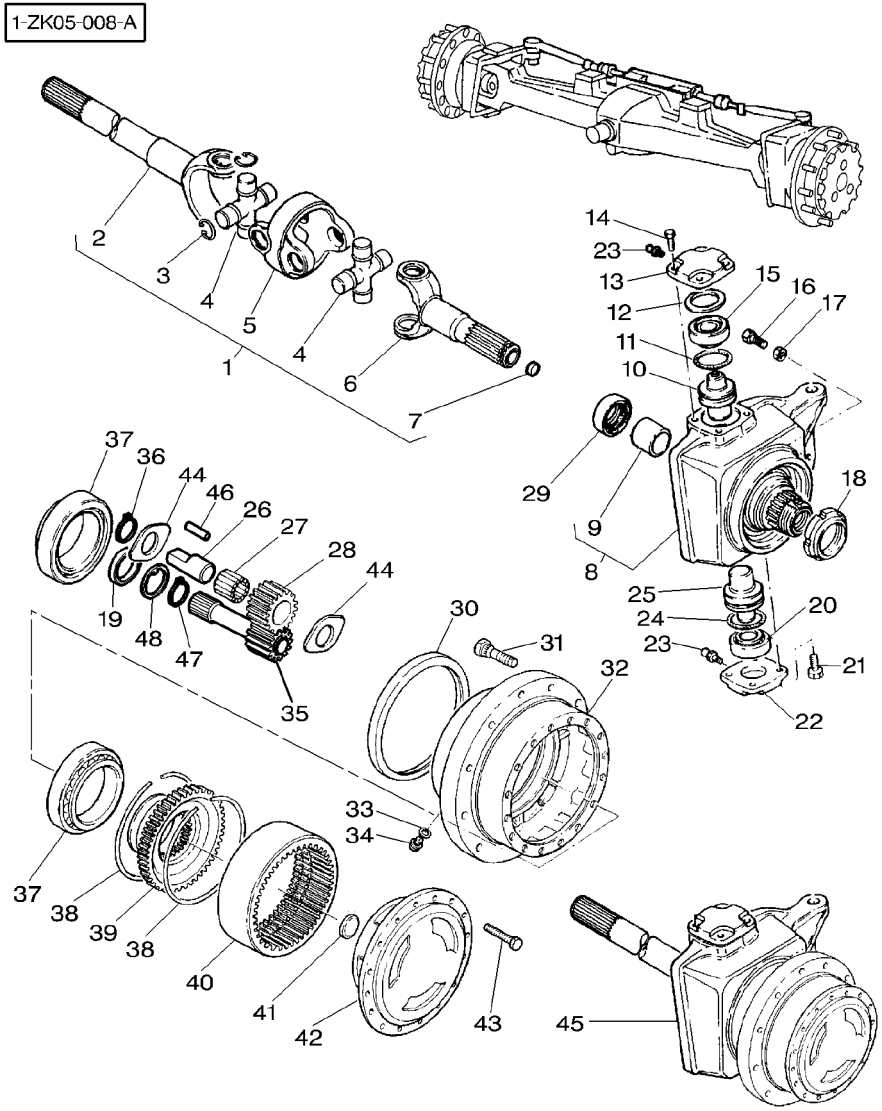

13	3429322M1		2	COVER	COUVERCLE COPERCHIO	DECKEL CUBIERTA
14	3428397M1		8	SCREW	VIS VITE	SCHRAUBE TORNILLO
15	3426619M1		2	BEARING ASSY	ROULEMENT CUSCINETTO COMPL	RADIALLAGER RODAMIENTO RAD
16	3764203M2	M18X150	2	BOLT	BOULON BULLONE	MASCH.SCHRAUBE PERNO
17	3764828M1		2	NUT	ECROU DADO	MUTTER TUERCA
18	3429521M1		2	NUT	ECROU DADO	MUTTER TUERCA
19	3764859M1		2	THRUST PLATE	PLAQUE DE BUTEE PIATTO DI SPINTA	DRUCKPLATTE PLATO ACELERADOR
20	3426619M1		2	BEARING ASSY	ROULEMENT CUSCINETTO COMPL	RADIALLAGER RODAMIENTO RAD
21	3428397M1		8	SCREW	VIS VITE	SCHRAUBE TORNILLO
22	3429323M1		2	COVER	COUVERCLE COPERCHIO	DECKEL CUBIERTA
23	339003X1		4	GREASER	GRAISSEUR INGRASSATORE	FETTNIPPEL ENGRASADOR
24	3429318M1		2	GASKET	JOINT GUARNIZIONE	DICHTSCHEIBE EMPAQUETADURA.
25	3429864M1		2	PIVOT	PIVOT CARDINE	DREHZAPFEN PIVOTE
26	3764839M1		6	CLEVIS PIN	AXE PERNO D'ATTACCO	SPLINTBOLZEN BULON CILINDRICO
27	3426855M3		150	NEEDLE	AIGUILLE AGO	NADEL AGUJA
28	**3426768M1**	19	6	GEAR	ENGRENAGE INGRANAGGIO	ZAHNRAD ENGRANAJE
29	3428942M1	55X82X16,5	2	OIL SEAL	BAGUE ETANCHEITE BOCCOLA PARAOLIO	OELDICHTRING BUJE RETENACEITE
30	3429815M3	190X220X16/18	2	OIL SEAL	BAGUE ETANCHEITE BOCCOLA PARAOLIO	OELDICHTRING BUJE RETENACEITE
31	3428141M3		20	SCREW	VIS VITE	SCHRAUBE TORNILLO
32	3764963M1		2	HUB	MOYEU MOZZO	NABE CUBO
33	3427185M1		2	WASHER	RONDELLE RONDELLA	UNTERLEGSCHEIBE ARANDELA
34	3429400M1		2	PLUG	BOUCHON TAPPO	VERSCHL.STOPFEN TAPON
35	3764858M1	13X19	2	PINION	PIGNON PIGNONE	RITZEL PINON
36	3764822M1		6	CIRCLIP	SEGMENT D ARRET ANELLO D'ARRESTO	SICHERUNGSRING CIRCULITO
37	3426851M2		4	BEARING TAPER	ROULEMNT CONIQUE CUSCINETTO CONIC	KEGELLAGER RODAMIENTO CONI
38	3428305M1		4	SEGMENT	SEGMENT SEGMENTO	SEGMENT SEGMENTO

1-ZK05-008-A

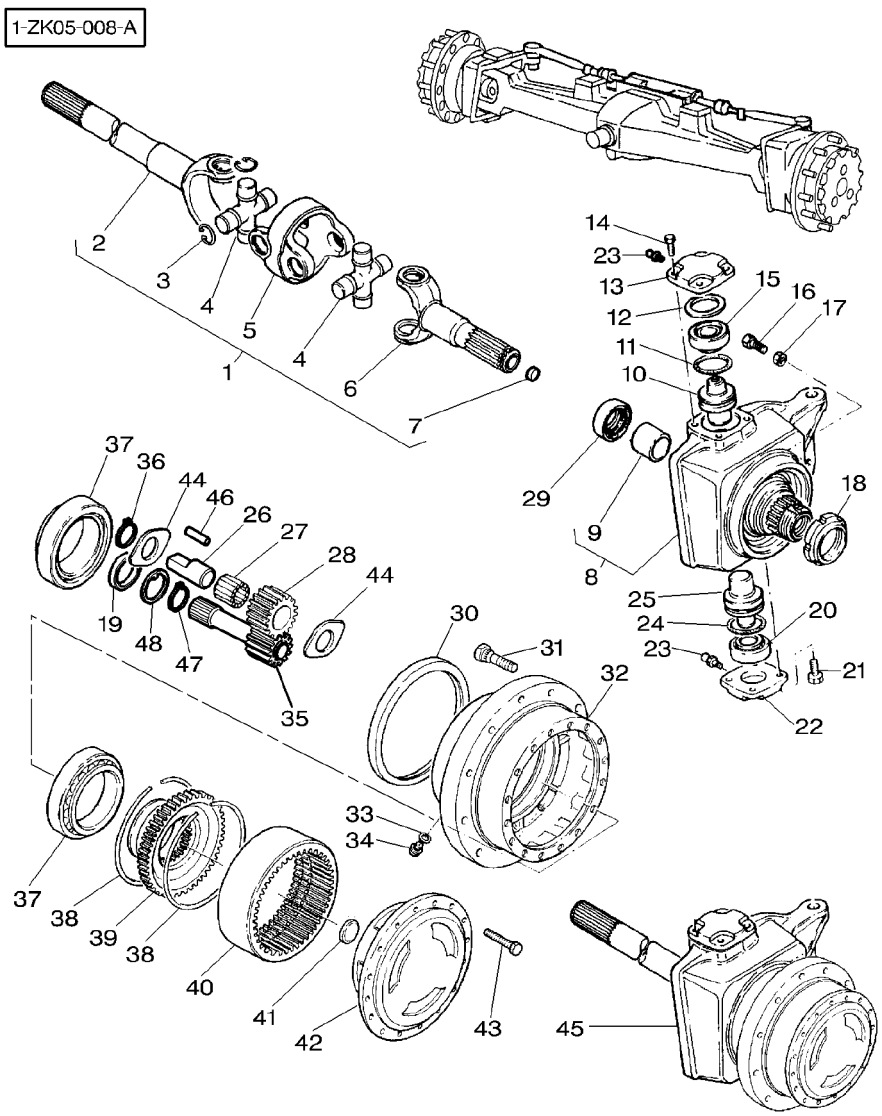

39	3429520M1		**2**	FLANGE	FLASQUE FLANGIA
40	**3428303M1**	53	**2**	ANNULAR GEAR	COURONNE CORONA DENTATA
41	3426771M1		**2**	THRUST PLATE	PLAQUE DE BUTEE PIATTO DI SPINTA
42	3764840M1		**2**	CARRIER	PORTE SATELLITES SUPPORTO SATELL.
43	3429943M1	M10X40	**32**	SCREW	VIS VITE
44	3427431M1		**12**	THRUST PLATE	PLAQUE DE BUTEE PIATTO DI SPINTA
45		[A] ◀	**1**	FINAL DRIVE	REDUCTION FINALE RIDUZIONE FINALE
45		[A] ▶	**1**	FINAL DRIVE	REDUCTION FINALE RIDUZIONE FINALE
46	3764823M1		**6**	NEEDLE	AIGUILLE AGO
47	3764881M1		**2**	CIRCLIP	SEGMENT D ARRET ANELLO D'ARRESTO
48	3764860M1		**2**	PLATE	PLAQUE PIASTRA

	FLANSCH	
	PLETINA	
	ZAHNKRANZ	
	ENGRANAJE ANULAR	
	DRUCKPLATTE	
	PLATO ACELERADOR	
	TRAEGER	
	PORTADOR	
	SCHRAUBE	
	TORNILLO	
	DRUCKPLATTE	
	PLATO ACELERADOR	
	ENDANTRIEB	
	REDUCCION FINAL	
	ENDANTRIEB	
	REDUCCION FINAL	
	NADEL	
	AGUJA	
	SICHERUNGSRING	
	CIRCULITO	
	PLATTE	
	PLATO	

[A] NUMBER TO BE ADVISED
NUMERO COMMUNIQUE ULTERIEUREMENT
NUMMER WIRD BEKANNTGEGEBEN
NUMERO DA AVUISARE
NUMERO AVISAR

70

Steering Wheel And Steady Column
Volant De Direction Et Colonne Fixe
Lenkrad Und Saeulefest
Volante E Colonna Fissa
Volante Direccion Y Columna Fija

70-5

1-ZN03-001-B

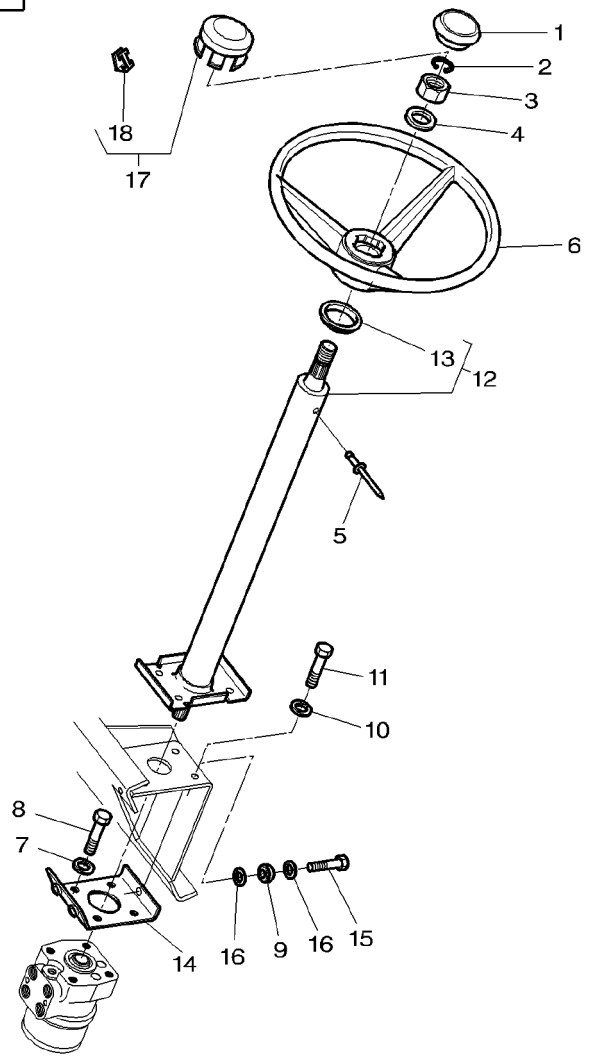

1	3618970M91	➡	H176010	**1**	HELMET	CAPUCHON CASCO	SCHUTZHELM CASCO
2			[A]	**1**	RING	ANNEAU ANELLO	RING ARO
3	339070X1		M14	**1**	NUT	ECROU DADO	MUTTER TUERCA
4	390973X1		∅ 15−28X2,5MM	**1**	WASHER METRIC	RONDELLE METR. RONDELLA METRICO	SCHEIBE METRISCH ARANDELA METRICO
5	338941X1		∅ 4 X 7,5MM	**1**	RIVET	RIVET RIVETTO	NIET REMACHE
6	3385796M2	➡	J168017	**1**	STEERING WHEEL	VOLANT DIRECTION VOLANTE STERZO	LENKRAD VOLANT DIRECCION
6	3809661M1	➡	J168018	**1**	STEERING WHEEL	VOLANT DIRECTION VOLANTE STERZO	LENKRAD VOLANT DIRECCION
7	390734X1			**4**	WASHER METRIC	RONDELLE METR. RONDELLA METRICO	SCHEIBE METRISCH ARANDELA METRICO
8	339282X1		M10X16	**4**	SCREW METRIC	VIS METRIQUE VITE METRICA	SCHRAUBE METR TORNILLO METRICO
9	**1619912M1**			**3**	VIBRATION MOUNT	SILENT BLOC ANTIVIBRANTE	GUMMIMETALL MONTAJE ANTI−VIB
10	1440921X1		∅ 8−22X2MM	**4**	WASHER METRIC	RONDELLE METR. RONDELLA METRICO	SCHEIBE METRISCH ARANDELA METRICO
11	339124X1		M8	**4**	SCREW METRIC	VIS METRIQUE VITE METRICA	SCHRAUBE METR TORNILLO METRICO
12	3714650M94			**1**	COLUMN	COLONNE COLONNA	SAEULE COLUMNA
13	3902578M1	12		**1**	GASKET	JOINT GUARNIZIONE	DICHTSCHEIBE EMPAQUETADURA.
14	3388920M93			**1**	SUPPORT	SUPPORT SUPPORTO	LAGERUNG DISPOS.DE SOSTEN
15	3009494X1		M10X35	**3**	SCREW METRIC	VIS METRIQUE VITE METRICA	SCHRAUBE METR TORNILLO METRICO
16	3389958M1			**3**	WASHER	RONDELLE RONDELLA	UNTERLEGSCHEIBE ARANDELA
17	3759758M92	➡	H176011	**1**	CAP	CHAPEAU CAPPELLO	KAPPE TAPA
18	3817055M1	17		**2**	CLIP	CLIP FERMAGLIO	SCHELLE CRAPA RETEN

[A] NOT USED
NON UTILISE
NICHT VERWENDET
NON USATO
NO SE USA

Steering Wheel And Telescopic Column
Volant De Direction Et Colonne Telescopique
Lenkrad Und Saeuleteleskopisch
Volante E Colonna Telescopico
Volante Direccion Y Columna Telescopico

70-10

1-ZN04-001-B

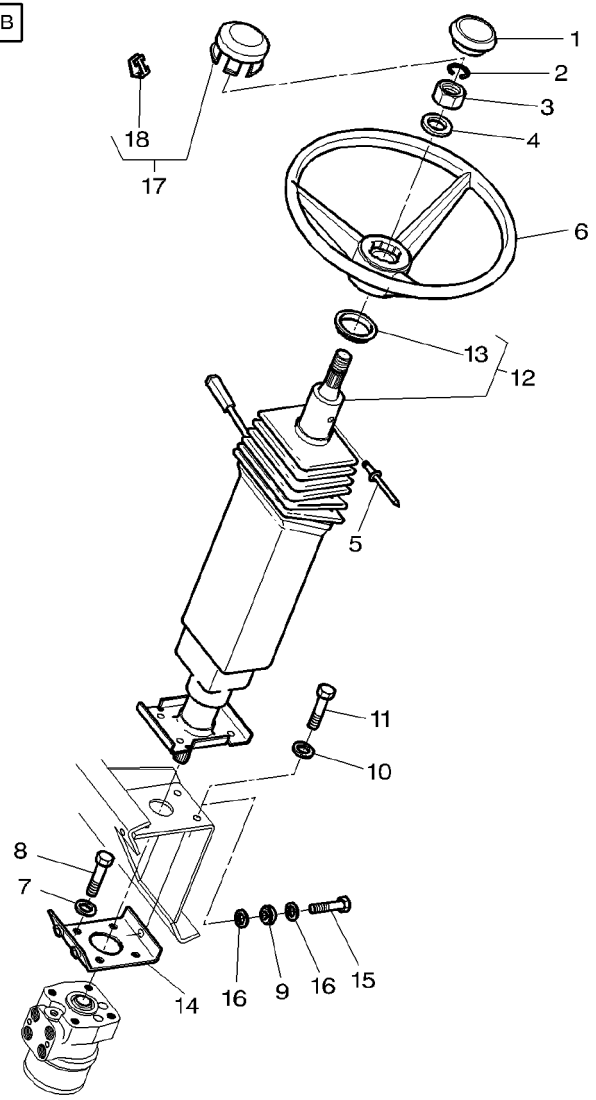

1	3618970M91	➡| H176010	**1**	HELMET	CAPUCHON / CASCO	SCHUTZHELM / CASCO
2		[A]	**1**	RING	ANNEAU / ANELLO	RING / ARO
3	339070X1	M14	**1**	NUT	ECROU / DADO	MUTTER / TUERCA
4	390973X1	∅ 15−28x2,5MM	**1**	WASHER METRIC	RONDELLE METR. / RONDELLA METRICO	SCHEIBE METRISCH / ARANDELA METRICO
5	338941X1	∅ 4X7,5MM	**1**	RIVET	RIVET / RIVETTO	NIET / REMACHE
6	3809661M1		**1**	STEERING WHEEL	VOLANT DIRECTION / VOLANTE STERZO	LENKRAD / VOLANT DIRECCION
7	390734X1		**4**	WASHER METRIC	RONDELLE METR. / RONDELLA METRICO	SCHEIBE METRISCH / ARANDELA METRICO
8	339282X1	M10X16	**4**	SCREW METRIC	VIS METRIQUE / VITE METRICA	SCHRAUBE METR / TORNILLO METRICO
9	**1619912M1**		**3**	VIBRATION MOUNT	SILENT BLOC / ANTIVIBRANTE	GUMMIMETALL / MONTAJE ANTI−VIB
10	1440921X1	∅ 8−22X2MM	**4**	WASHER METRIC	RONDELLE METR. / RONDELLA METRICO	SCHEIBE METRISCH / ARANDELA METRICO
11	339124X1	M8x16	**4**	SCREW METRIC	VIS METRIQUE / VITE METRICA	SCHRAUBE METR / TORNILLO METRICO
12	3713868M2	👁 70−15 No 1	**1**	COLUMN	COLONNE / COLONNA	SAEULE / COLUMNA
13		12 👁 70−15 No 16	**1**	GASKET	JOINT / GUARNIZIONE	DICHTSCHEIBE / EMPAQUETADURA.
14	3388920M93		**1**	SUPPORT	SUPPORT / SUPPORTO	LAGERUNG / DISPOS.DE SOSTEN
15	3009494X1	M10X35	**3**	SCREW METRIC	VIS METRIQUE / VITE METRICA	SCHRAUBE METR / TORNILLO METRICO
16	3389958M1		**3**	WASHER	RONDELLE / RONDELLA	UNTERLEGSCHEIBE / ARANDELA
17	3759758M92	➡| H176011	**1**	CAP	CHAPEAU / CAPPELLO	KAPPE / TAPA
18	3817055M1	17	**2**	CLIP	CLIP / FERMAGLIO	SCHELLE / CRAPA RETEN

[A] NOT USED
NON UTILISE
NICHT VERWENDET
NON USATO
NO SE USA

Steering Wheel And Telescopic Column
Volant De Direction Et Colonne Telescopique
Lenkrad Und Saeuleteleskopisch
Volante E Colonna Telescopico
Volante Direccion Y Columna Telescopico

70-15

1-ZN04-002-A

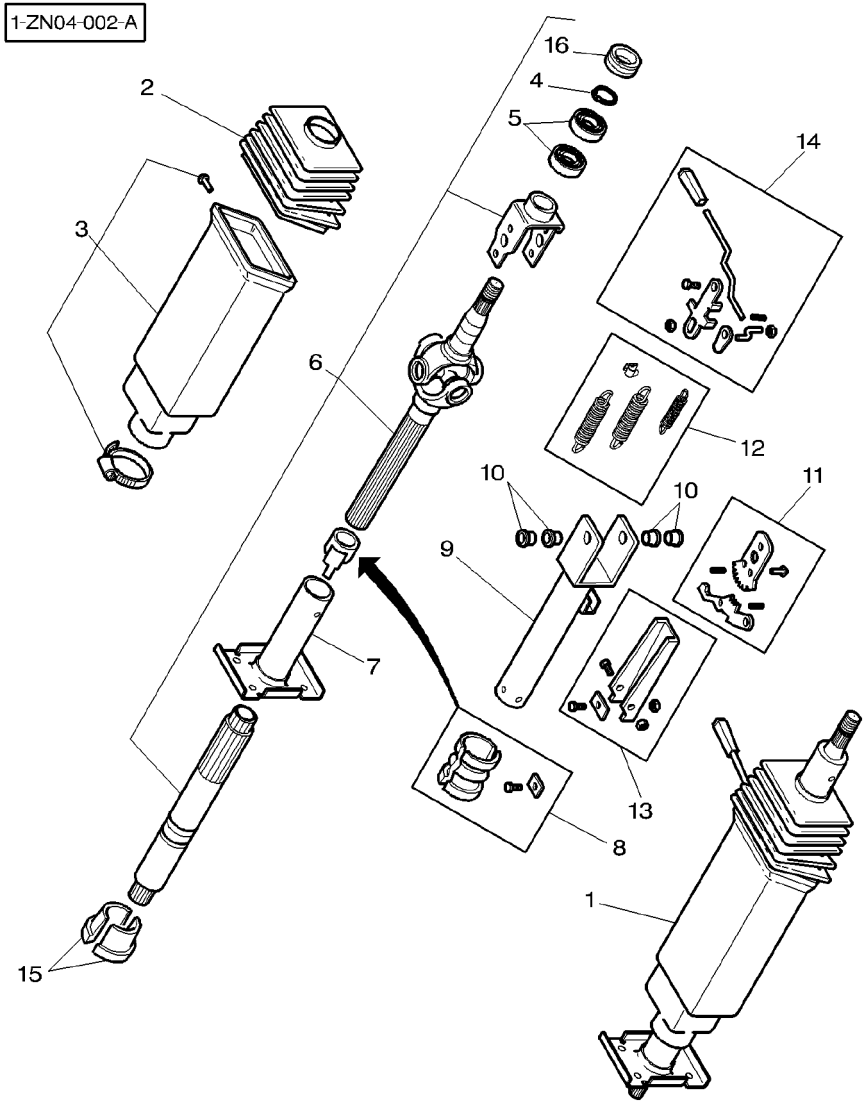

1	3713868M2		**1**	COLUMN	COLONNE COLONNA	SAEULE COLUMNA
2	3902566M91	1	**1**	BELLOWS	SOUFFLET SOFFIETTO	FALTENBALG FUELLE
3	3902568M91	1	**1**	CASE ASSY	BOITIER CARCASSA COMPLET	GEHAEUSE KPL CAJA COMPLETA
4	1440475X1	6	**1**	CIRCLIP	SEGMENT D ARRET ANELLO D'ARRESTO	SICHERUNGSRING CIRCULITO
5	1440872X1	6	**2**	BEAR. 6004 RS	RLT 6004 RS CUSC. 6004 RS	LAGER 6004 RS RODA. 6004 RS
6	3902564M1	1	**1**	SHAFT	ARBRE ALBERO	WELLE ARBOL
7	3902565M1	1	**1**	COLUMN	COLONNE COLONNA	SAEULE COLUMNA
8	3900242M91	1	**1**	PARTS PACK	JEU PIECES PACCO RICAMBI	SATZ TEILE PAQUETE PIEZAS
9	3900241M91	1	**1**	COLUMN	COLONNE COLONNA	SAEULE COLUMNA
10	3900164M91	1	**1**	CLEVIS PIN	AXE PERNO D'ATTACCO	SPLINTBOLZEN BULON CILINDRICO
11	3900146M91	1	**1**	KIT, LEVER	JEU LEVIER KIT LEVETTA	SATZ HEBEL JUEGO, PALANCA
12	3900167M91	1	**1**	KIT, SPRING	JEU RESSORTS KIT MOLLA	FEDERNSATZ MUELLES JUEGO
13	3900166M91	1	**1**	KIT, BRAKE	JEU FREIN KIT FRENO	BREMSENSATZ FRENOS JUEGO
14	3902567M91	1	**1**	KIT, LEVER	JEU LEVIER KIT LEVETTA	SATZ HEBEL JUEGO, PALANCA
15	3900145M1	1	**1**	BEARING	COUSSINET CUSCINETTO	LAGER COJINETE
16	3902578M1	6	**1**	GASKET	JOINT GUARNIZIONE	DICHTSCHEIBE EMPAQUETADURA.

Lighting Dynashift Drive
Commande Eclairage Dynashift
Beleuchtung Dynashift Schaltung
Comando Illuminazione Dynashift
Mando Alumbrado Dynashift

70-20

1-ZN16-001-A

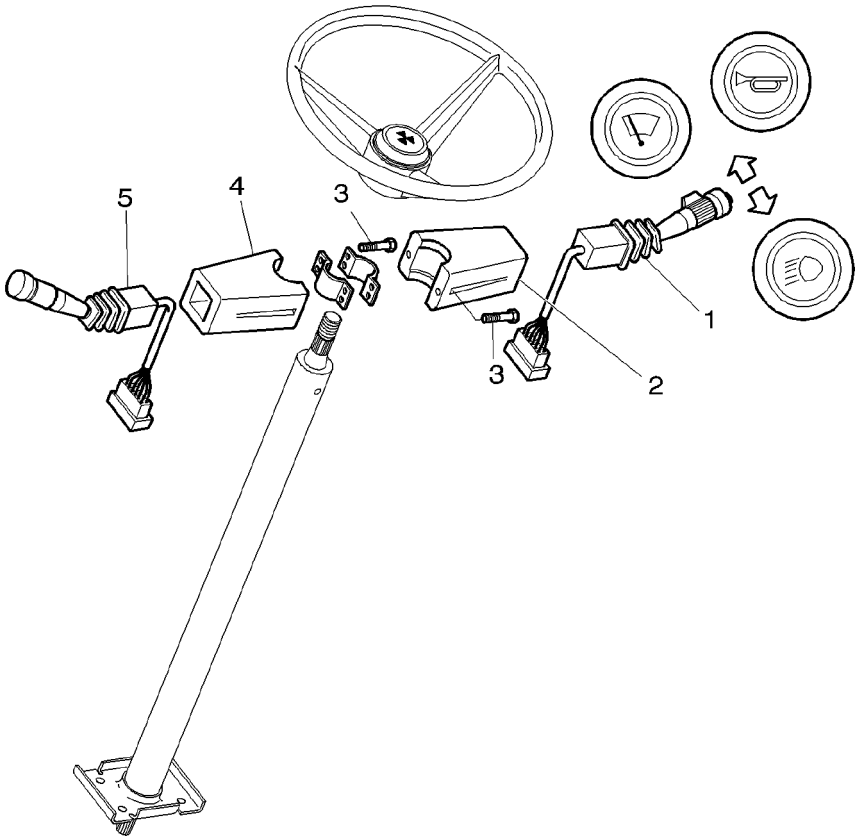

1	***3713669M2***		**1**	SWITCH,INDIRECT	CONTACTEUR INTERRUTTORE IND / KONTAKTSCHALTER CONTACTOR
2	3713680M1		**1**	CASE ASSY	BOITIER CARCASSA COMPLET / GEHAEUSE KPL CAJA COMPLETA
3	3713785M1	M4	**6**	SCREW	VIS VITE / SCHRAUBE TORNILLO
4	3713670M1		**1**	CASE ASSY	BOITIER CARCASSA COMPLET / GEHAEUSE KPL CAJA COMPLETA
5	***3715822M4***		**1**	SWITCH,INDIRECT	CONTACTEUR INTERRUTTORE IND / KONTAKTSCHALTER CONTACTOR

Lighting Power Shuttle
Commande Eclairage Et Inverseur
Beleuchtung Und Schaltung Bedinung
Comando Illuminazione E Sotto
Mando Alumbrado Y Inversor

70-25

1-ZN15-001-C

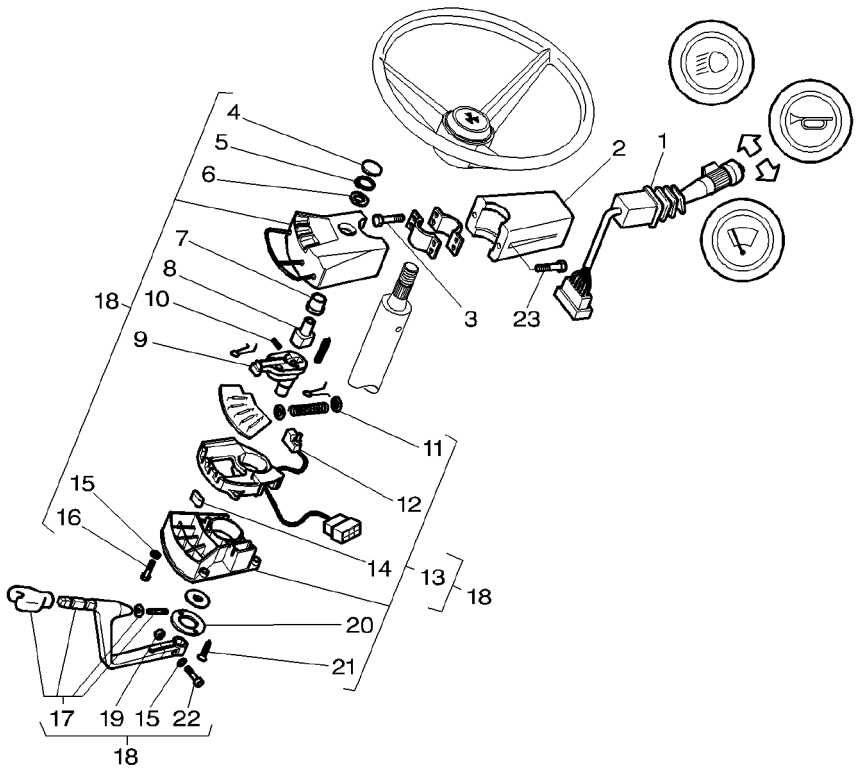

1	***3713669M2***			**1**	SWITCH,INDIRECT	CONTACTEUR INTERRUTTORE IND	KONTAKTSCHALTER CONTACTOR
2	3779042M1			**1**	CASE ASSY	BOITIER CARCASSA COMPLET	GEHAEUSE KPL CAJA COMPLETA
3	3713785M1	M4		**4**	SCREW	VIS VITE	SCHRAUBE TORNILLO
4	3903223M1	18		**1**	HELMET	CAPUCHON CASCO	SCHUTZHELM CASCO
5	3903224M1	18		**1**	CIRCLIP	SEGMENT D ARRET ANELLO D'ARRESTO	SICHERUNGSRING CIRCULITO
6	3903225M1	18		**1**	WASHER	RONDELLE RONDELLA	UNTERLEGSCHEIBE ARANDELA
7	3903226M1	18		**1**	GUIDE BUSH	BAGUE GUIDE BUSSOLA GUIDA	FUEHRUNGSBUCHSE CASQUILLO GUIA
8	3903227M1	18		**1**	FLANGED PIN	AXE ENTRAINEUR FLANGED PIN	FLANSCHZAPFEN FLANGED PIN
9	3903507M1	18		**1**	SHIFTER	LEVIER DE CDE SPOSTACINGHIA	AUSRUECKER CAMBIADOR
10	3903228M1	18 ∅ 4 MM ◀▶ 28 MM		**1**	ROLL PIN	GOUPILLE ROULEE SPINA ELASTICA	SPANNHUELSE PASADOR ELASTICO
11	3903243M1	13		**2**	PLUG	BOUCHON TAPPO	VERSCHL.STOPFEN TAPON
12	3903230M1	13		**1**	MICRO SWITCH	MICRO CONTACTEUR MICROINTERRUTTOR	MIKROSCHALTER INTERRUPT MICRO
13	3903302M91	18		**1**	MODULE	MODULE MODULO	MODEL MODULO
14	3903232M1	13		**1**	RUBBER	CAOUTCHOUC COTE	GUMMI CAUCHO
15	3903234M1	18	M4	**5**	TAB WASHER	RONDELLE EVENT PIASTRINA SICUR	SICHERUNGSBLECH ARANDELA ALETA
16	3903233M1	18	M4x14	**4**	SCREW	VIS VITE	SCHRAUBE TORNILLO
17	3903303M91	18		**1**	LEVER	LEVIER LEVA	HEBEL PALANCA
18	3780596M94			**1**	COMBI SWITCH	COMMODO COMBI SWITCH	KOMBI−SCHALTER COMBI SWITCH
19	3903238M1	18 ∅	M4	**1**	NUT	ECROU DADO	MUTTER TUERCA
20	3903235M1	13		**1**	PIVOT PLATE	PLAQUE PIVOT PIASTRA GIREVOLE	WIPPE PLACA DE PIVOTE
21	3903236M1	13		**2**	SCREW	VIS VITE	SCHRAUBE TORNILLO
22	3903239M1	18	M4x18	**1**	SCREW	VIS VITE	SCHRAUBE TORNILLO
23	3010818X1		M4x20	**1**	SCREW METRIC	VIS METRIQUE VITE METRICA	SCHRAUBE METR TORNILLO METRICO
23	3010895X1		M4x35	**1**	SCREW METRIC	VIS METRIQUE VITE METRICA	SCHRAUBE METR TORNILLO METRICO

Steering Pump
Pompe De Direction
Lenkhilfepumpe
Pompa Di Sterzo
Bomba Direccion

70-30

1-ZN07-001-A

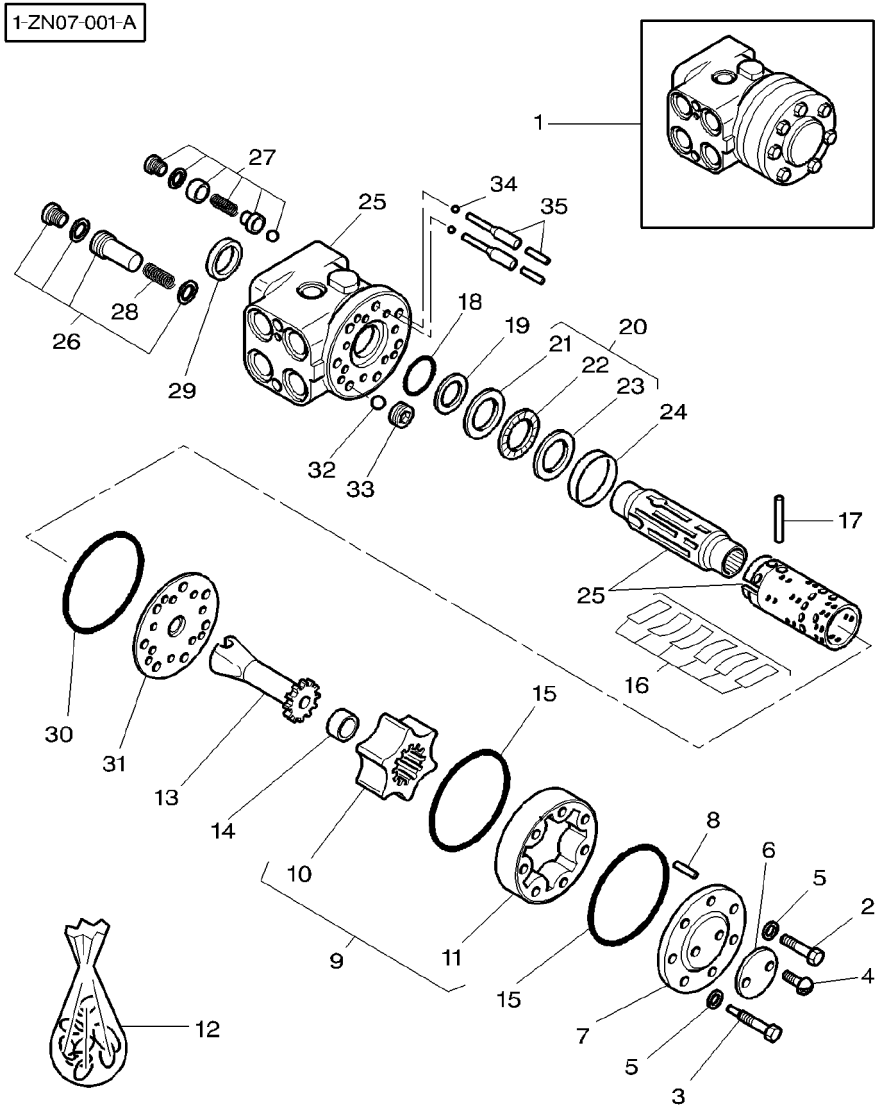

1	3712399M1	125 CM3	1	DISTRIBUTOR	DISTRIBUTEUR DISTRIBUTORE	VERTEILER DISTRIBUIDOR
1	3712250M1	200 CM3	1	DISTRIBUTOR	DISTRIBUTEUR DISTRIBUTORE	VERTEILER DISTRIBUIDOR
2	1887730M1	1	6	SCREW	VIS VITE	SCHRAUBE TORNILLO
2	1429154M1	1	6	SCREW	VIS VITE	SCHRAUBE TORNILLO
3	1887727M1	1	1	SCREW	VIS VITE	SCHRAUBE TORNILLO
3	1429153M1	1	1	SCREW	VIS VITE	SCHRAUBE TORNILLO
4	1806318M1	1	2	SCREW	VIS VITE	SCHRAUBE TORNILLO
5	1806317M1	1	7	WASHER	RONDELLE RONDELLA	UNTERLEGSCHEIBE ARANDELA
6	1890402M1	1	1	PLATE	PLAQUE PIASTRA	PLATTE PLATO
7	1806316M1	1	1	CAP	CHAPEAU CAPPELLO	KAPPE TAPA
8	1806312M1	1	1	PIN	GOUPILLE PERNO	BOLZEN PASADOR
9	1635884M91	1	1	KIT, GEAR	JEU ENGRENAGES KIT INGRANAGGI	ZAHNRADSATZ ENGRANAJES JUEGO
9	1429157M91	1	1	KIT, GEAR	JEU ENGRENAGES KIT INGRANAGGI	ZAHNRADSATZ ENGRANAJES JUEGO
10		9 REF.9	1	GEAR	ENGRENAGE INGRANAGGIO	ZAHNRAD ENGRANAJE
11		9 REF.9	1	STATOR	STATOR STATORE	STATOR ESTATOR
12	1810503M92		1	PARTS PACK	JEU PIECES PACCO RICAMBI	SATZ TEILE PAQUETE PIEZAS
13	1806416M1	1	1	SHAFT	ARBRE ALBERO	WELLE ARBOL
14	1635883M1	1	1	SPACER	ENTRETOISE DISTANZIALE	ABSTANDSTUECK PIEZA DISTANCIA
14	1429155M1	1	1	SPACER	ENTRETOISE DISTANZIALE	ABSTANDSTUECK PIEZA DISTANCIA
15	1806315M1	1	2	SEAL	JOINT ETANCHEITE PARAOLIO	DICHTRING RETEN
16	1894415M1	1	1	SPRING	RESSORT MOLLA	FEDER MUELLE
17	1806310M1	1	1	PIN	GOUPILLE PERNO	BOLZEN PASADOR
18		12 REF.12	1	SEAL	JOINT ETANCHEITE PARAOLIO	DICHTRING RETEN
19		12 REF.12	1	SEAL	JOINT ETANCHEITE PARAOLIO	DICHTRING RETEN
20	1894414M91	1	1	BEARING ASSY	ROULEMENT CUSCINETTO COMPL	RADIALLAGER RODAMIENTO RAD
21		20 REF.20	1	BEARING ASSY	ROULEMENT CUSCINETTO COMPL	RADIALLAGER RODAMIENTO RAD

Steering Pump
Pompe De Direction
Lenkhilfepumpe
Pompa Di Sterzo
Bomba Direccion

70-30

1-ZN07-001-A

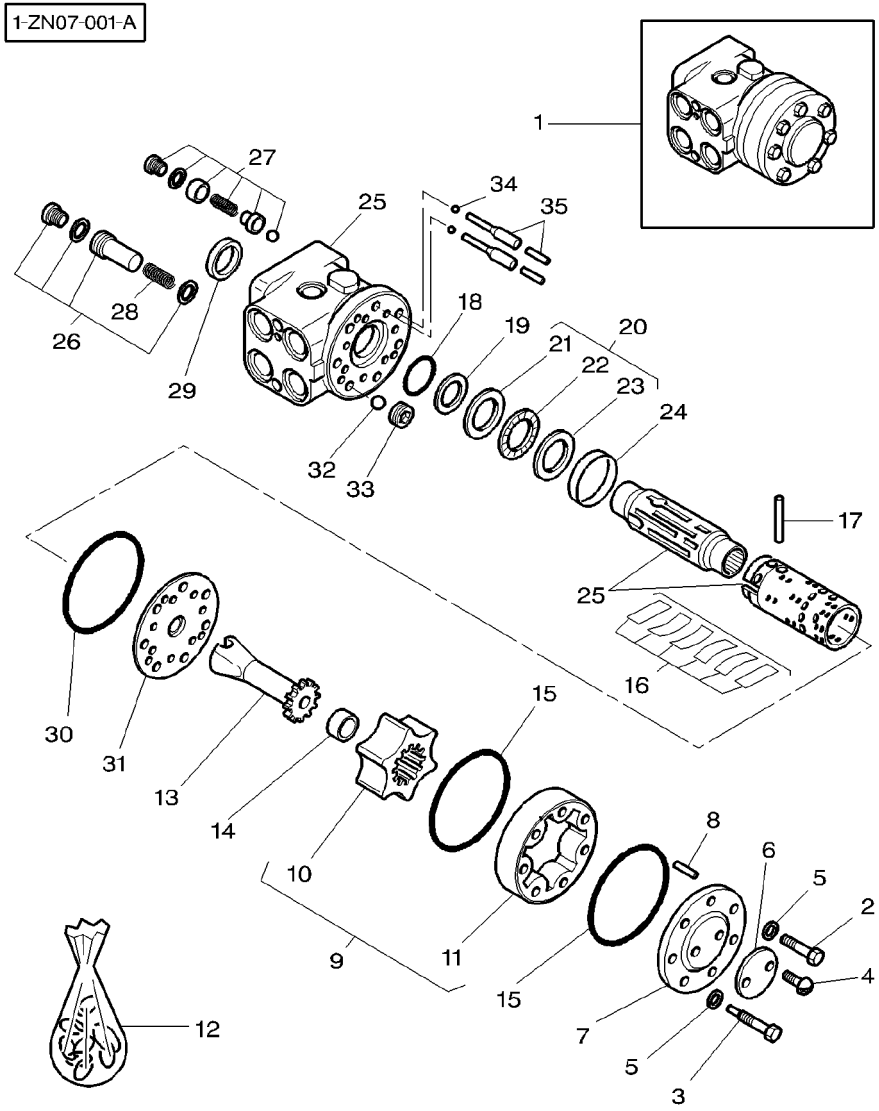

22		20	REF.20	**1**	BEARING ASSY	ROULEMENT CUSCINETTO COMPL RADIALLAGER RODAMIENTO RAD
23		20	REF.20	**1**	BEARING ASSY	ROULEMENT CUSCINETTO COMPL RADIALLAGER RODAMIENTO RAD
24	1806303M1	1		**1**	BUSH	BAGUE BOCCOLA BUCHSE CASQUILLO
25		1	REF. 1	**1**	PUMP	POMPE POMPA PUMPE BOMBA
26	3902076M91	1		**1**	PRESSURE VALVE	VALVE VALVOLA PRESSION DRUCKVENTIL VALVULA PRESION
26	3476502M91	1		**1**	PRESSURE VALVE	VALVE VALVOLA PRESSION DRUCKVENTIL VALVULA PRESION
27	1897432M91	1		**2**	PARTS PACK	JEU PIECES PACCO RICAMBI SATZ TEILE PAQUETE PIEZAS
28		26	REF.26	**1**	SPRING	RESSORT MOLLA FEDER MUELLE
29	1887719M1	1		**1**	SEAL	JOINT ETANCHEITE PARAOLIO DICHTRING RETEN
30	1806314M1	1		**1**	SEAL	JOINT ETANCHEITE PARAOLIO DICHTRING RETEN
31	1806319M1	1		**1**	PLATE	PLAQUE PIASTRA PLATTE PLATO
32	1806311M1	1		**1**	BALL	BILLE SFERA KUGEL BOLA
33	1806313M1	1		**1**	SEAT	SIEGE SEDILE SITZ ASIENTO
34	1897434M1	1		**2**	BALL	BILLE SFERA KUGEL BOLA
35	1897608M91	1		**2**	ROLL PIN	GOUPILLE ROULEE SPINA ELASTICA SPANNHUELSE PASADOR ELASTICO

Steering Hydraulic Lines
Tuyauteries Hydrauliques De Direction
Hydraulikleitungen Lenkung
Tubazioni Idrauliche Di Sterzo
Instalacion Hidraulica De Direccion

70-35

2 Wheels Drive
2 Roues Motrices
Interradantrieb
2 Ruote Motrici
2 Ruedas Motrice

1-ZN06-001-C

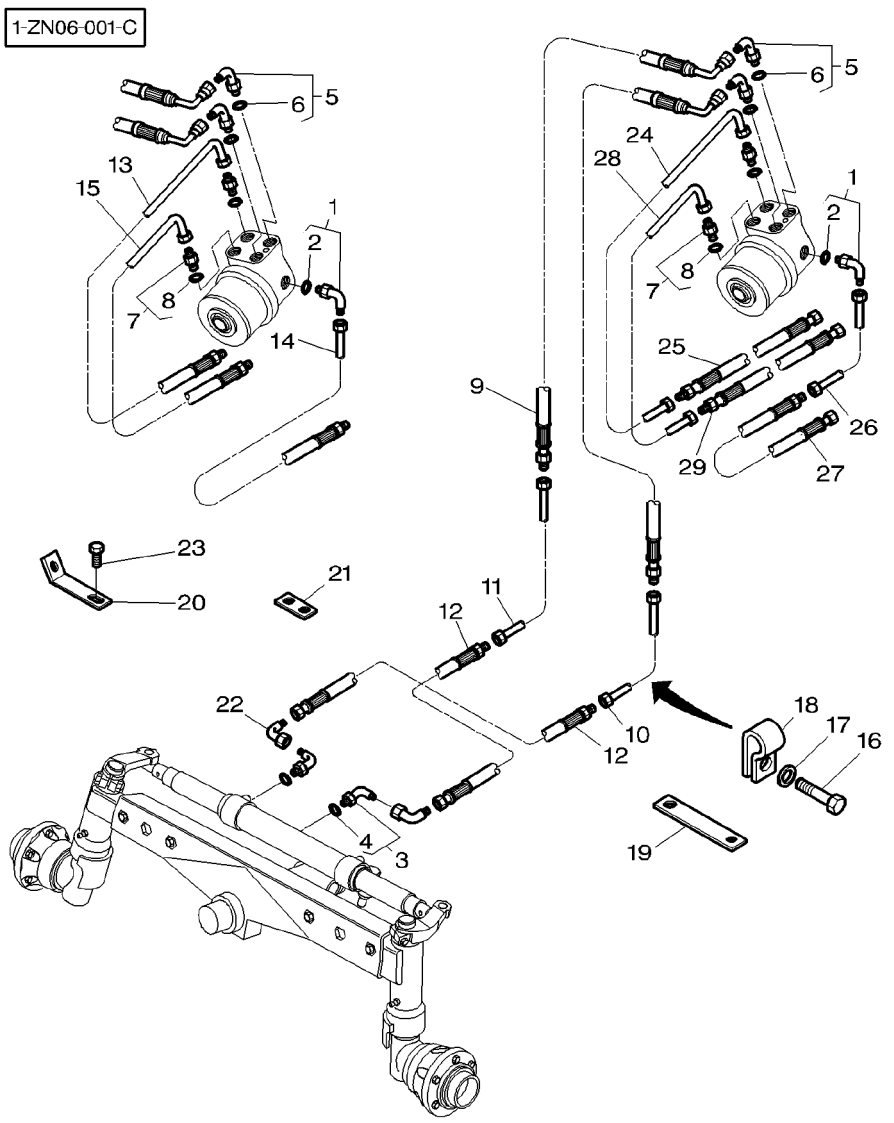

1	3019410X91	M12	**1**	ELBOW NIPPLE	RACCORD COUDE NIPPLO GOMITO	WINKELSTUTZEN CODO DE UNION
2	3019394X1	1	**1**	O RING	JOINT TORIQUE ANELLO OR	O-RING JUNTA TORICA
3	3010546X91	M14	**2**	ELBOW NIPPLE	RACCORD COUDE NIPPLO GOMITO	WINKELSTUTZEN CODO DE UNION
4	3019395X1	3 M14	**1**	O RING	JOINT TORIQUE ANELLO OR	O-RING JUNTA TORICA
5	3019588X91	M18	**2**	UNION	RACCORD RACCORDO	VERSCHRAUBUNG RACOR
6	3019394X1	5	**1**	O RING	JOINT TORIQUE ANELLO OR	O-RING JUNTA TORICA
7	3019383X91	M18	**2**	ADAPTOR	ADAPTATEUR ADATTATORE	REDUZIERNIPPEL ADAPTADOR
8	3019397X1	7	**1**	O RING	JOINT TORIQUE ANELLO OR	O-RING JUNTA TORICA
9	5015903M2	◄► 555MM	**2**	HYDR HOSE	FLEXIBLE TUBOFLEX IDRAUL	HYDR SCHLAUCH TUBO HIDRAULICO
10	3781089M1		**1**	TUBE	TUBE TUBO	ROHR TUBO
11	3781088M1		**1**	TUBE	TUBE TUBO	ROHR TUBO
12	5015906M3	◄► 560MM	**2**	HYDR HOSE	FLEXIBLE TUBOFLEX IDRAUL	HYDR SCHLAUCH TUBO HIDRAULICO
13	3778588M1	[C] ➡ J182026	**1**	TUBE	TUBE TUBO	ROHR TUBO
13	3779448M2	[B] ➡ J185016	**1**	TUBE	TUBE TUBO	ROHR TUBO
13	3782425M1	[A] ➡ J258010	**1**	TUBE	TUBE TUBO	ROHR TUBO
14	3778589M1	➡ J150027	**1**	TUBE	TUBE TUBO	ROHR TUBO
14	3782424M1	[A] ➡	**1**	TUBE	TUBE TUBO	ROHR TUBO
15	3778590M2	➡ J070009	**1**	TUBE	TUBE TUBO	ROHR TUBO
15	3782423M1	[A] ➡ J258010	**1**	TUBE	TUBE TUBO	ROHR TUBO
16	339123X1	M8X20	**4**	SCREW METRIC	VIS METRIQUE VITE METRICA	SCHRAUBE METR TORNILLO METRICO
16	339124X1	M8X16	**1**	SCREW METRIC	VIS METRIQUE VITE METRICA	SCHRAUBE METR TORNILLO METRICO
17	390972X1		**5**	WASHER METRIC	RONDELLE METR. RONDELLA METRICO	SCHEIBE METRISCH ARANDELA METRICO
18	70925617		**5**	CLAMP	COLLIER FASCETTA	HALTESCHELLE ABRAZADERA
19	3781238M1	[B] ◄► 175MM	**1**	STRAP	PATTE CORREGGIA	LASCHE FAJA
20	3781239M2	[B]	**1**	STRAP	PATTE CORREGGIA	LASCHE FAJA
20	3781239M2	[C]	**2**	STRAP	PATTE CORREGGIA	LASCHE FAJA

Steering Hydraulic Lines
Tuyauteries Hydrauliques De Direction
Hydraulikleitungen Lenkung
Tubazioni Idrauliche Di Sterzo
Instalacion Hidraulica De Direccion

70-35

2 Wheels Drive
2 Roues Motrices
Interradantrieb
2 Ruote Motrici
2 Ruedas Motrice

1-ZN06-001-C

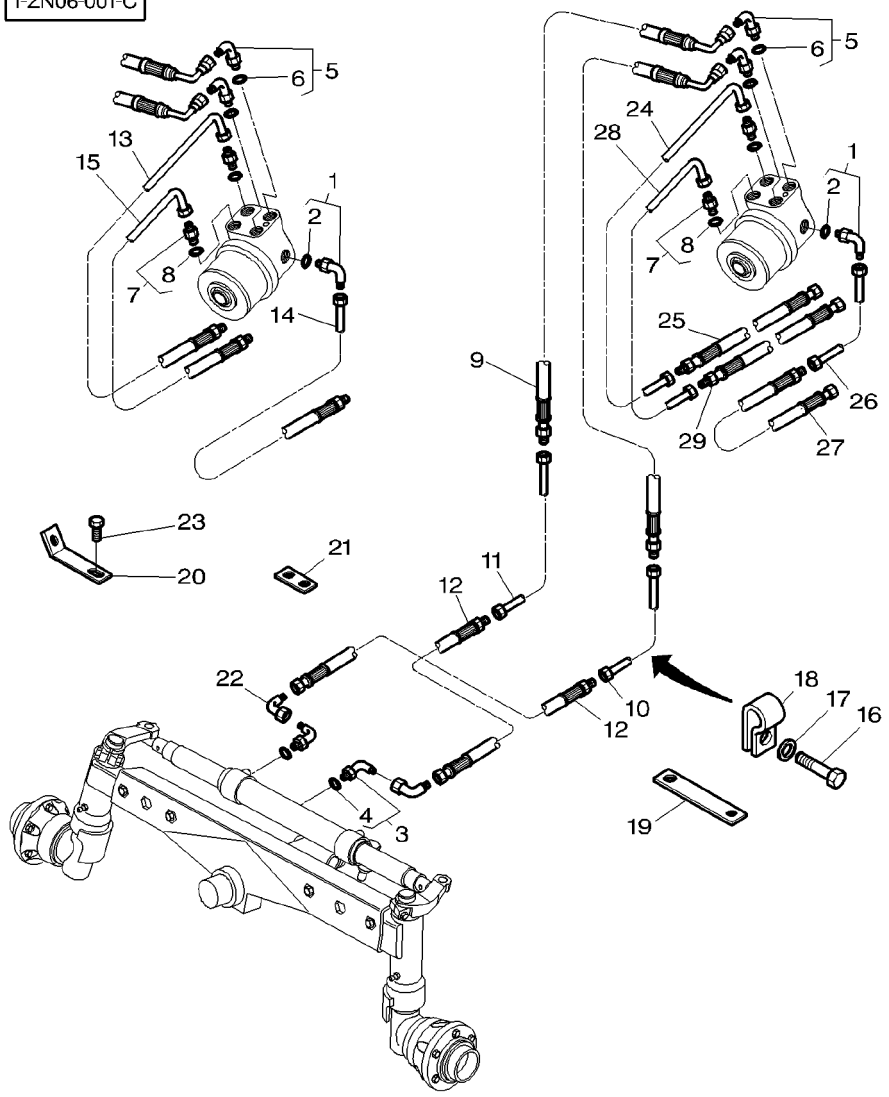

21	3781240M1	◄► 45MM	**1**	STRAP	PATTE CORREGGIA	LASCHE FAJA
22	365233X1		**2**	ELBOW	COUDE GOMITO	WINKELSTUECK CODO
23	353691X1	[C]	**2**	SCREW UNC	VIS UNC VITE UNC	SCHRAUBE UNC TORNILLO UNC
24	3783528M1	[C] ►■ J182027	**1**	TUBE	TUBE TUBO	ROHR TUBO
24	3783528M1	[B] ►■ J185017	**1**	TUBE	TUBE TUBO	ROHR TUBO
24	3783529M1	[A] ►■ J258011	**1**	TUBE	TUBE TUBO	ROHR TUBO
25	3783517M1	[C] ◄► 900MM ►■ J182027	**1**	HYDR HOSE	FLEXIBLE TUBOFLEX IDRAUL	HYDR SCHLAUCH TUBO HIDRAULICO
25	3783516M1	[B] ◄► 1300MM ►■ J185017	**1**	HYDR HOSE	FLEXIBLE TUBOFLEX IDRAUL	HYDR SCHLAUCH TUBO HIDRAULICO
25	3783516M1	[A] ◄► 1300MM ►■ J258011	**1**	HYDR HOSE	FLEXIBLE TUBOFLEX IDRAUL	HYDR SCHLAUCH TUBO HIDRAULICO
26	3783525M1	►■ J150028	**1**	TUBE	TUBE TUBO	ROHR TUBO
26	3783526M1	[A] ►■	**1**	TUBE	TUBE TUBO	ROHR TUBO
27	3783512M1	◄► 1250MM ►■ J150028	**1**	HYDR HOSE	FLEXIBLE TUBOFLEX IDRAUL	HYDR SCHLAUCH TUBO HIDRAULICO
27	3783512M1	[A] ◄► 1250MM ►■	**1**	HYDR HOSE	FLEXIBLE TUBOFLEX IDRAUL	HYDR SCHLAUCH TUBO HIDRAULICO
28	3783523M1	►■ J070010	**1**	TUBE	TUBE TUBO	ROHR TUBO
28	3783524M1	[A] ►■ J258011	**1**	TUBE	TUBE TUBO	ROHR TUBO
29	3783514M1	◄► 1350MM ►■ J070010	**1**	HYDR HOSE	FLEXIBLE TUBOFLEX IDRAUL	HYDR SCHLAUCH TUBO HIDRAULICO
29	3783514M1	[A] ◄► 1350MM ►■ J258011	**1**	HYDR HOSE	FLEXIBLE TUBOFLEX IDRAUL	HYDR SCHLAUCH TUBO HIDRAULICO

[A] TRACTOR WITH PLATFORM
TRACTEUR AVEC PLATEFORME
SCHLEPPER MIT PLATTFORM
TRATTORE CON PIATTAFORMA
TRACTOR CON PLATAFORMA

[B] WITH DYNASHIFT
AVEC DYNASHIFT
MIT DYNASHIFT
CON DYNASHIFT
CON DYNASHIFT

Steering Hydraulic Lines
Tuyauteries Hydrauliques De Direction
Hydraulikleitungen Lenkung
Tubazioni Idrauliche Di Sterzo
Instalacion Hidraulica De Direccion

70-35

2 Wheels Drive
2 Roues Motrices
Interradantrieb
2 Ruote Motrici
2 Ruedas Motrice

1-ZN06-001-C

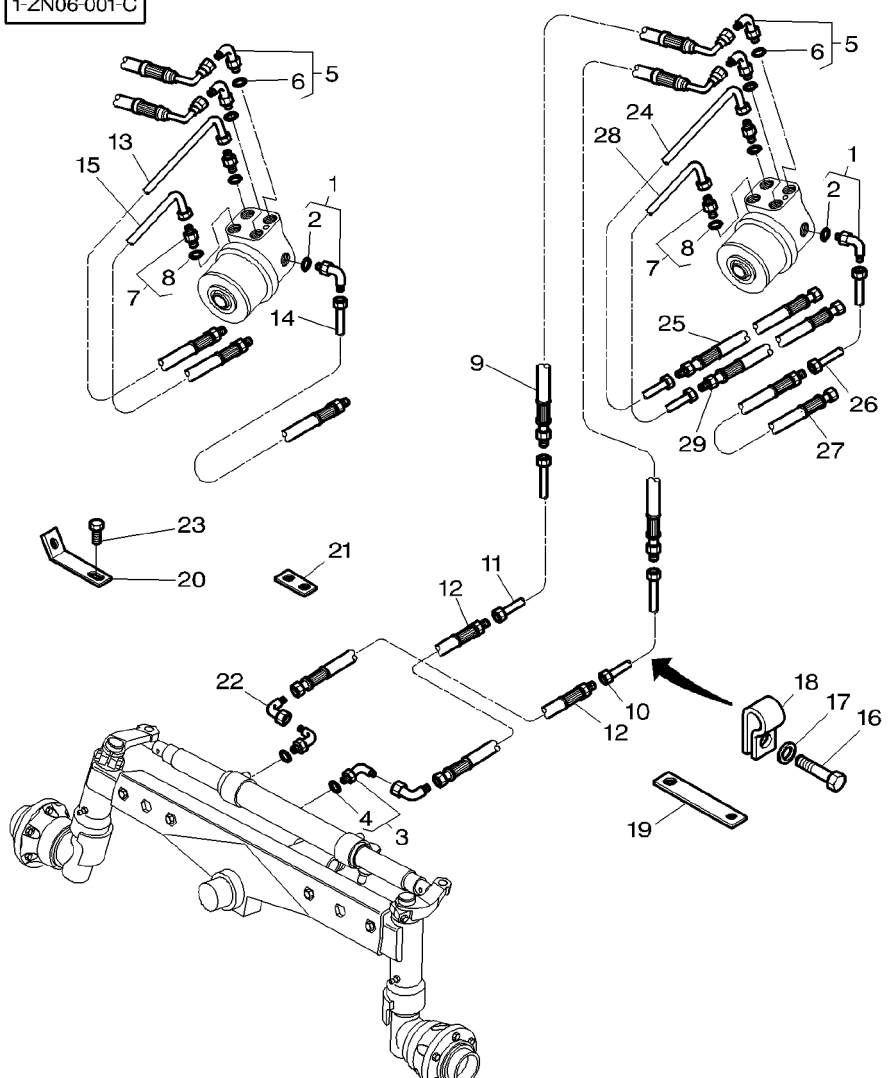

[C] WITH FULL POWERSHIFT
AVEC FULL POWERSHIFT
MIT FULL POWERSHIFT
CON FULL POWERSHIFT
CON FULL POWERSHIFT

Steering Hydraulic Lines
Tuyauteries Hydrauliques De Direction
Hydraulikleitungen Lenkung
Tubazioni Idrauliche Di Sterzo
Instalacion Hidraulica De Direccion

70-40

4 Wheels Drive
4 Roues Motrices
Allradantrieb
4 Ruote Motrici
4 Ruedas Motrices

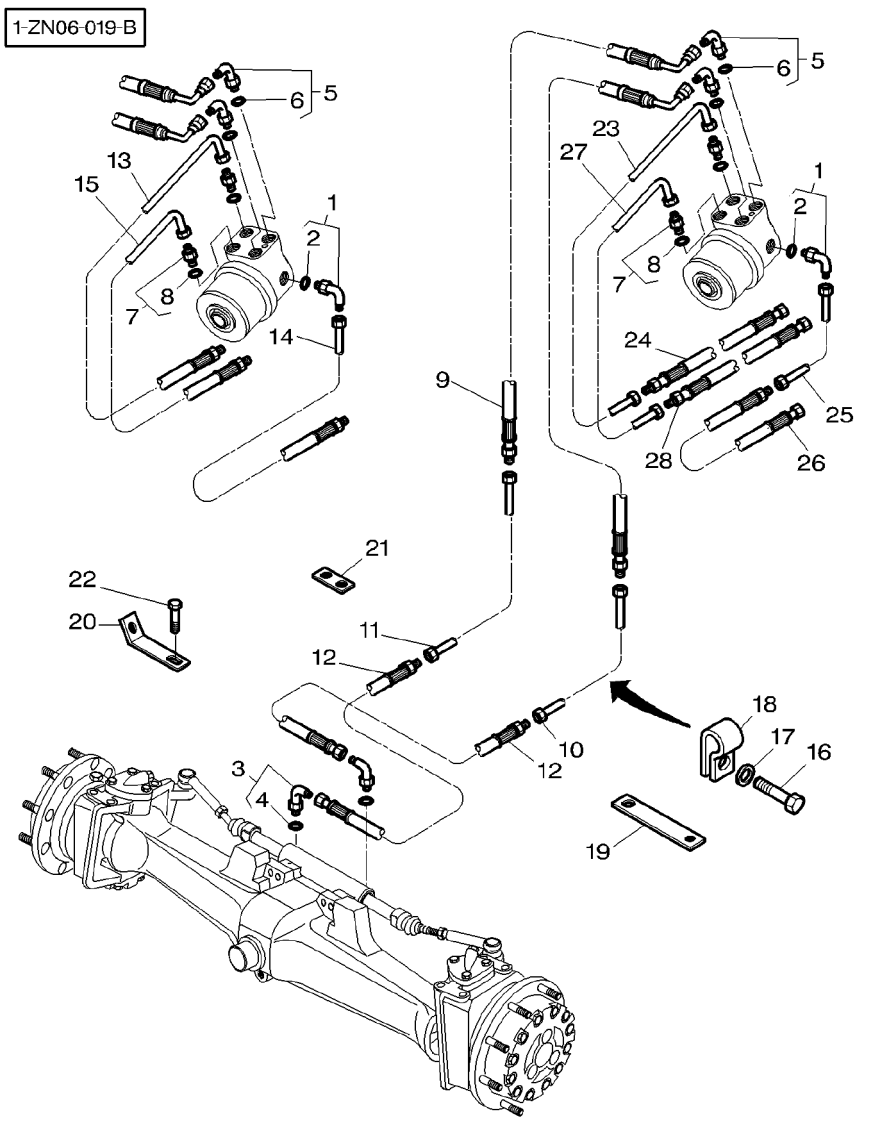

1	3019410X91	M12	**1**	ELBOW NIPPLE	RACCORD COUDE NIPPLO GOMITO	WINKELSTUTZEN CODO DE UNION
2	3019394X1	1	**1**	O RING	JOINT TORIQUE ANELLO OR	O-RING JUNTA TORICA
3	**3019414X91**	M16	**2**	UNION	RACCORD RACCORDO	VERSCHRAUBUNG RACOR
4	3019396X1	3	**1**	O RING	JOINT TORIQUE ANELLO OR	O-RING JUNTA TORICA
5	3019588X91	M18	**2**	UNION	RACCORD RACCORDO	VERSCHRAUBUNG RACOR
6	3019394X1	5	**1**	O RING	JOINT TORIQUE ANELLO OR	O-RING JUNTA TORICA
7	3019383X91	M18	**2**	ADAPTOR	ADAPTATEUR ADATTATORE	REDUZIERNIPPEL ADAPTADOR
8	3019397X1	7	**1**	O RING	JOINT TORIQUE ANELLO OR	O-RING JUNTA TORICA
9	5015903M2	◄► 555MM	**2**	HYDR HOSE	FLEXIBLE TUBOFLEX IDRAUL	HYDR SCHLAUCH TUBO HIDRAULICO
10	3781089M1		**1**	TUBE	TUBE TUBO	ROHR TUBO
11	3781088M1		**1**	TUBE	TUBE TUBO	ROHR TUBO
12	5015330M3		**2**	HYDR HOSE	FLEXIBLE TUBOFLEX IDRAUL	HYDR SCHLAUCH TUBO HIDRAULICO
13	3778588M1	[C] ➡ J182026	**1**	TUBE	TUBE TUBO	ROHR TUBO
13	3779448M2	[B] ➡ J185016	**1**	TUBE	TUBE TUBO	ROHR TUBO
13	3782425M1	[A] ➡ J258010	**1**	TUBE	TUBE TUBO	ROHR TUBO
14	3778589M1	➡ J150027	**1**	TUBE	TUBE TUBO	ROHR TUBO
14	3782424M1	[A] ➡	**1**	TUBE	TUBE TUBO	ROHR TUBO
15	3778590M2	➡ J070009	**1**	TUBE	TUBE TUBO	ROHR TUBO
15	3782423M1	[A] ➡ J258010	**1**	TUBE	TUBE TUBO	ROHR TUBO
16	339123X1	M8X20	**4**	SCREW METRIC	VIS METRIQUE VITE METRICA	SCHRAUBE METR TORNILLO METRICO
16	339124X1	M8X16	**1**	SCREW METRIC	VIS METRIQUE VITE METRICA	SCHRAUBE METR TORNILLO METRICO
17	390972X1		**5**	WASHER METRIC	RONDELLE METR. RONDELLA METRICO	SCHEIBE METRISCH ARANDELA METRICO
18	70925617		**5**	CLAMP	COLLIER FASCETTA	HALTESCHELLE ABRAZADERA
19	3781238M1	[B] ◄► 175MM	**1**	STRAP	PATTE CORREGGIA	LASCHE FAJA
20	3781239M2	[B]	**1**	STRAP	PATTE CORREGGIA	LASCHE FAJA
20	3781239M2	[C]	**2**	STRAP	PATTE CORREGGIA	LASCHE FAJA

Steering Hydraulic Lines
Tuyauteries Hydrauliques De Direction
Hydraulikleitungen Lenkung
Tubazioni Idrauliche Di Sterzo
Instalacion Hidraulica De Direccion

70-40

4 Wheels Drive
4 Roues Motrices
Allradantrieb
4 Ruote Motrici
4 Ruedas Motrices

1-ZN06-019-B

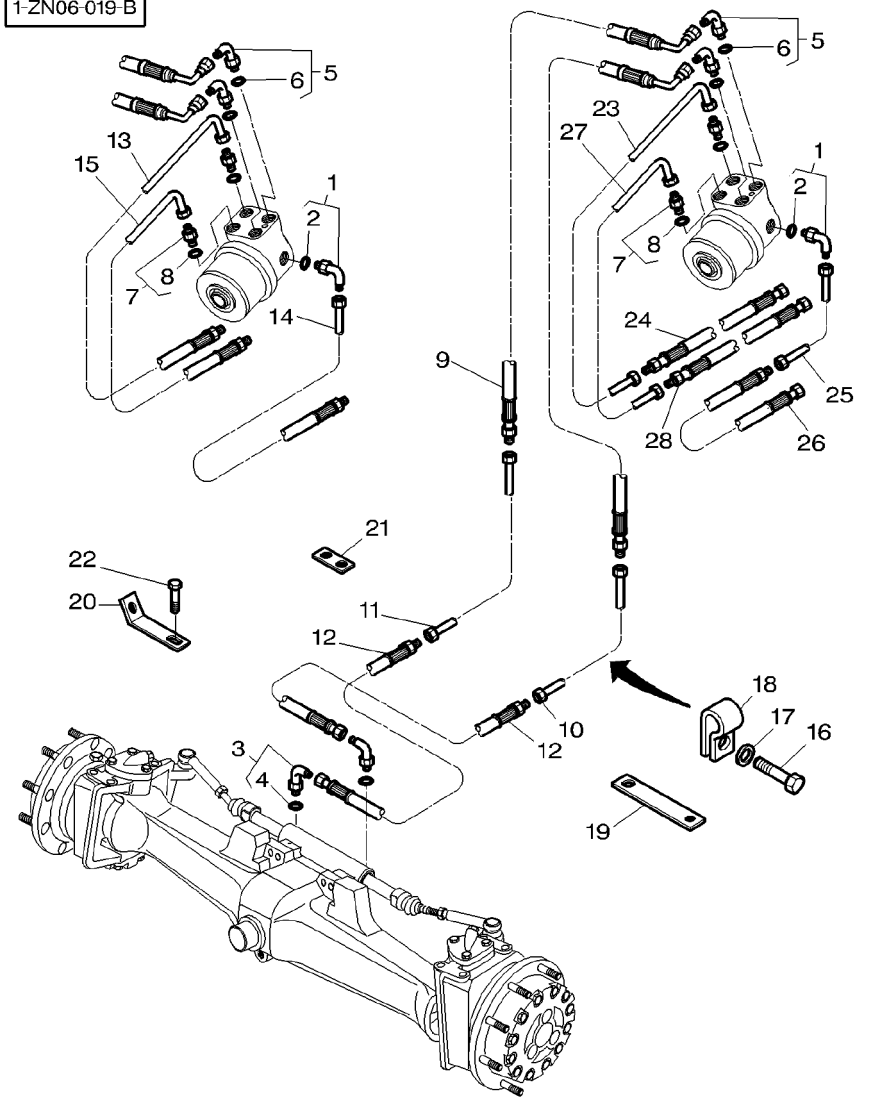

21	3781240M1	◄► 45MM	1	STRAP	PATTE CORREGGIA	LASCHE FAJA
22	353691X1	[C]	2	SCREW UNC	VIS UNC VITE UNC	SCHRAUBE UNC TORNILLO UNC
23	3783528M1	[C] ► J182027	1	TUBE	TUBE TUBO	ROHR TUBO
23	3783528M1	[B] ► J185017	1	TUBE	TUBE TUBO	ROHR TUBO
23	3783529M1	[A] ► J258011	1	TUBE	TUBE TUBO	ROHR TUBO
24	3783517M1	[C] ◄► 900MM ► J182027	1	HYDR HOSE	FLEXIBLE TUBOFLEX IDRAUL	HYDR SCHLAUCH TUBO HIDRAULICO
24	3783516M1	[B] ◄► 1300MM ► J185017	1	HYDR HOSE	FLEXIBLE TUBOFLEX IDRAUL	HYDR SCHLAUCH TUBO HIDRAULICO
24	3783516M1	[A] ◄► 1300MM ► J258011	1	HYDR HOSE	FLEXIBLE TUBOFLEX IDRAUL	HYDR SCHLAUCH TUBO HIDRAULICO
25	3783525M1	► J150028	1	TUBE	TUBE TUBO	ROHR TUBO
25	3783526M1	[A] ►	1	TUBE	TUBE TUBO	ROHR TUBO
26	3783512M1	◄► 1250MM ► J150028	1	HYDR HOSE	FLEXIBLE TUBOFLEX IDRAUL	HYDR SCHLAUCH TUBO HIDRAULICO
26	3783512M1	[A] ◄► 1250MM ►	1	HYDR HOSE	FLEXIBLE TUBOFLEX IDRAUL	HYDR SCHLAUCH TUBO HIDRAULICO
27	3783523M1	► J070010	1	TUBE	TUBE TUBO	ROHR TUBO
27	3783524M1	[A] ► J258011	1	TUBE	TUBE TUBO	ROHR TUBO
28	3783514M1	◄► 1350MM ► J070010	1	HYDR HOSE	FLEXIBLE TUBOFLEX IDRAUL	HYDR SCHLAUCH TUBO HIDRAULICO
28	3783514M1	[A] ◄► 1350MM ► J258011	1	HYDR HOSE	FLEXIBLE TUBOFLEX IDRAUL	HYDR SCHLAUCH TUBO HIDRAULICO

[A] TRACTOR WITH PLATFORM
TRACTEUR AVEC PLATEFORME
SCHLEPPER MIT PLATTFORM
TRATTORE CON PIATTAFORMA
TRACTOR CON PLATAFORMA

[B] WITH DYNASHIFT
AVEC DYNASHIFT
MIT DYNASHIFT
CON DYNASHIFT
CON DYNASHIFT

Steering Hydraulic Lines
Tuyauteries Hydrauliques De Direction
Hydraulikleitungen Lenkung
Tubazioni Idrauliche Di Sterzo
Instalacion Hidraulica De Direccion

70-40

4 Wheels Drive
4 Roues Motrices
Allradantrieb
4 Ruote Motrici
4 Ruedas Motrices

1-ZN06-019-B

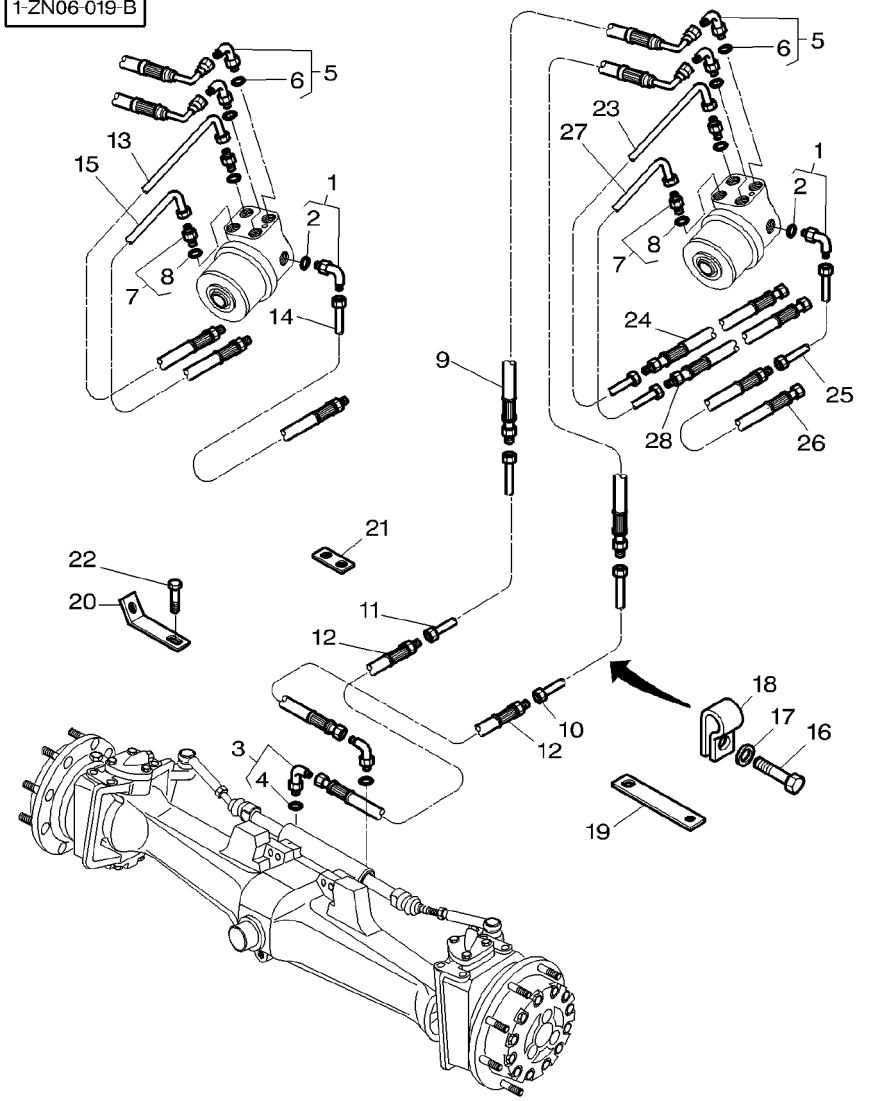

[C] WITH FULL POWERSHIFT
AVEC FULL POWERSHIFT
MIT FULL POWERSHIFT
CON FULL POWERSHIFT
CON FULL POWERSHIFT

1-ZP60-002-C

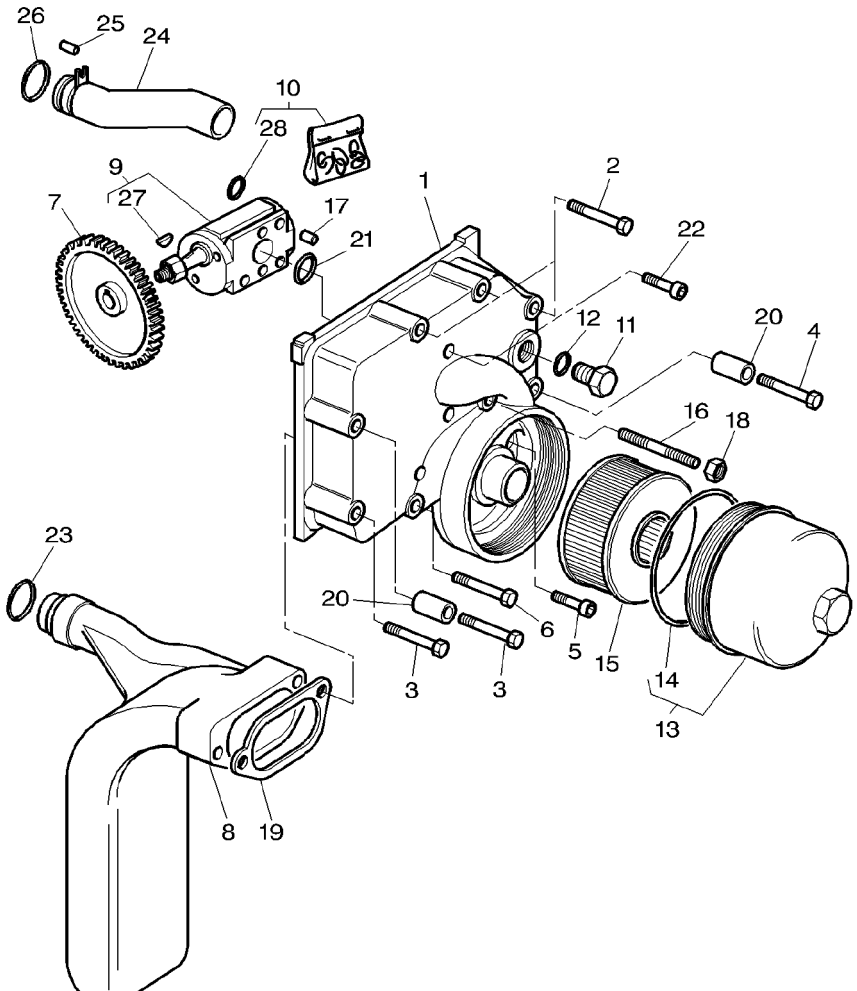

1	3791328M4		**1**	COVER	COUVERCLE COPERCHIO	DECKEL CUBIERTA
2	3009518X1	M12X110	**3**	SCREW	VIS VITE	SCHRAUBE TORNILLO
3	3009517X1	M12X100	**2**	BOLT METRIC	BOULON METRIQUE BULLONE METRICO	MASCH.SCHRB MET PERNO METRICO
4	1444034X1	M12X125	**1**	BOLT METRIC	BOULON METRIQUE BULLONE METRICO	MASCH.SCHRB MET PERNO METRICO
5	3009300X1	M12X70	**1**	SCREW	VIS VITE	SCHRAUBE TORNILLO
6	3009518X1	M12X110	**1**	SCREW	VIS VITE	SCHRAUBE TORNILLO
7	3716351M1	70	**1**	PINION	PIGNON PIGNONE	RITZEL PINON
8	3716938M3		**1**	MANIFOLD	COLLECTEUR COLLETTORE	KRUEMMER MULTIPLE
9	3618001M3	[A]	**1**	PUMP	POMPE POMPA	PUMPE BOMBA
9	3791900M1	[B]	**1**	PUMP	POMPE POMPA	PUMPE BOMBA
10	3903020M91		**1**	KIT, JOINT	JEU JOINTS KIT GIUNTO	DICHTUNGSSATZ JUEGO JUNTAS
11	3019438X1	M30	**1**	PLUG	BOUCHON TAPPO	VERSCHL.STOPFEN TAPON
12	391265X1		**1**	GASKET	JOINT GUARNIZIONE	DICHTSCHEIBE EMPAQUETADURA.
13	3715772M91	[A]	**1**	COVER	COUVERCLE COPERCHIO	DECKEL CUBIERTA
13	3790001M91	[B]	**1**	COVER	COUVERCLE COPERCHIO	DECKEL CUBIERTA
14	3715773M1	13	**1**	O RING	JOINT TORIQUE ANELLO OR	O−RING JUNTA TORICA
15	***3714453M1***	[A] ◀▶ 98MM	**1**	STRAINER	CREPINE COLINO	FILTERSIEB COLADOR
15	***3790002M1***	[B] ◀▶ 139MM	**1**	STRAINER	CREPINE COLINO	FILTERSIEB COLADOR
16	392531X1	M8X105	**2**	STUD	GOUJON PRIGIONIERO	STEHBOLZEN ESPARRAGO
17	1442522X1	∅ 6X12	**2**	DOWEL	PLOT SPINA	ZYLINDERSTIFT CENTRAJE
18	339169X1		**2**	NUT METRIC	ECROU METRIQUE DADO METRICO	MUTTER METRISCH TUERCA METRICO
19	3791530M1		**1**	GASKET	JOINT GUARNIZIONE	DICHTSCHEIBE EMPAQUETADURA.
20	3000705X1	∅ 16X18	**2**	PIN	GOUPILLE PERNO	BOLZEN PASADOR
21	851150M1		**1**	RING	ANNEAU ANELLO	RING ARO
22	3009297X1	M10X90	**2**	SCREW METRIC	VIS METRIQUE VITE METRICA	SCHRAUBE METR TORNILLO METRICO
23	1001489M1		**1**	O RING	JOINT TORIQUE ANELLO OR	O−RING JUNTA TORICA

1-ZP60-002-C

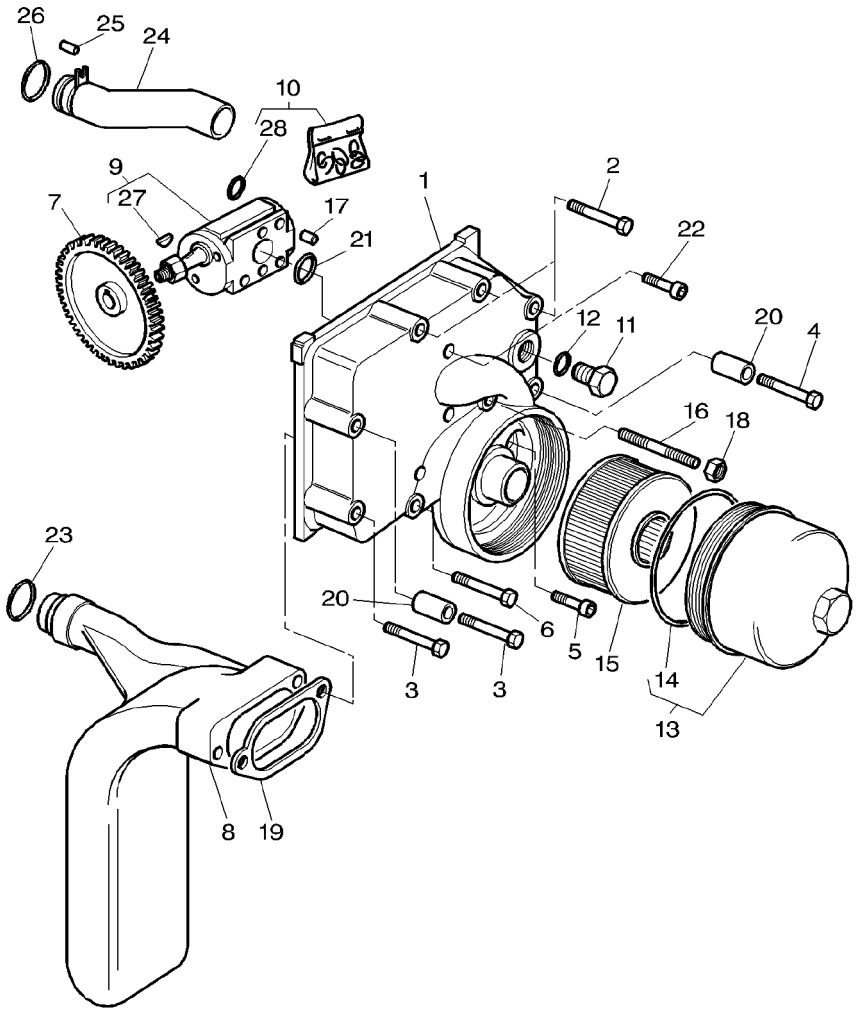

24	3716375M91		
25	1441722X1	∅ 3X16	
26	364777X1		
27	1440360X1	9	
28	1441708X1	10	

[A] WITH PUMP 45CC
AVEC POMPE 45CC
MIT PUMPE 45CC
CON POMPA 45CC
CON BOMBA 45CC

[B] WITH PUMP 60CC
AVEC POMPE 60CC
MIT PUMPE 60CC
CON POMPA 60CC
CON BOMBA 60CC

1	TUBE	TUBE TUBO	ROHR TUBO
1	PIN	GOUPILLE PERNO	BOLZEN PASADOR
1	O RING	JOINT TORIQUE ANELLO OR	O−RING JUNTA TORICA
1	KEY	CLAVETTE CHIAVETTA	PASSKEIL CLAVE
1	O RING	JOINT TORIQUE ANELLO OR	O−RING JUNTA TORICA

Load Sensing Load Sensing Load Sensing Load Sensing Load Sensing	Cover Rh Couvercle Droit Rechtsdeckel Tapa Destro Coperchio Derecho	70-50	With Pump 45cc Avec Pompe 45cc Mit Pumpe 45cc Con Pompa 45cc Con Bomba 45cc

1-ZP61-017-B

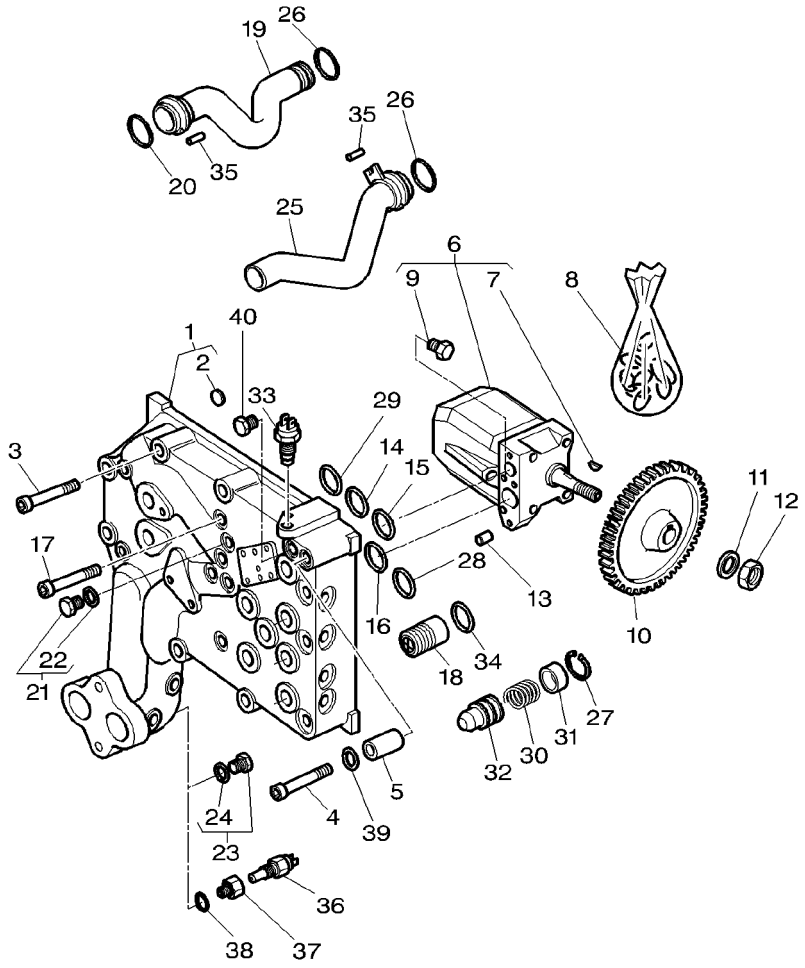

1	3716703M15		**1**	COVER	COUVERCLE COPERCHIO	DECKEL CUBIERTA
2	3712249M1	1 ∅ 10MM	**1**	PLUG	BOUCHON TAPPO	VERSCHL.STOPFEN TAPON
3	3009302X1	M12X90	**6**	SCREW METRIC	VIS METRIQUE VITE METRICA	SCHRAUBE METR TORNILLO METRICO
4	3009303X1	M12X100	**2**	SCREW	VIS VITE	SCHRAUBE TORNILLO
5	3000705X1	∅ 16X18MM	**2**	PIN	GOUPILLE PERNO	BOLZEN PASADOR
6	3716370M2	45CM3/RPM	**1**	PUMP	POMPE POMPA	PUMPE BOMBA
7	22277X	6	**1**	KEY	CLAVETTE CHIAVETTA	PASSKEIL CLAVE
8	3902614M91		**1**	KIT,JOINT/GASKET	JEU DE JOINTS KIT GUARN/GIUNTO	DICHTUNGS-SATZ JGO.JUNTAS/EMPAQ
9	3902662M1	6	**1**	PLUG	BOUCHON TAPPO	VERSCHL.STOPFEN TAPON
10	3716365M1	73	**1**	PINION	PIGNON PIGNONE	RITZEL PINON
11	353775X1		**1**	WASHER	RONDELLE RONDELLA	UNTERLEGSCHEIBE ARANDELA
12	353436X1		**1**	NUT UNF	ECROU UNF DADO UNF	MUTTER UNF TUERCA UNF
13	1442522X1	∅ 6X12MM	**2**	DOWEL	PLOT SPINA	ZYLINDERSTIFT CENTRAJE
14	***1001833M1***	∅ 6,07X1,78MM	**1**	O RING	JOINT TORIQUE ANELLO OR	O-RING JUNTA TORICA
15	359299X1	∅ 23,4X3,53MM	**1**	O RING	JOINT TORIQUE ANELLO OR	O-RING JUNTA TORICA
16	378251X1	∅ 36,17X2,62MM	**1**	O RING	JOINT TORIQUE ANELLO OR	O-RING JUNTA TORICA
17	1440354X1	M12X50	**4**	SCREW METRIC	VIS METRIQUE VITE METRICA	SCHRAUBE METR TORNILLO METRICO
18	3715621M92	5BARS	**1**	NON RETURN VALVE	CLAPET VALVOLA NO RITOR	RUCKSCHLAGVENTIL VALVULA DE GRANO
19	3716376M92		**1**	TUBE	TUBE TUBO	ROHR TUBO
20	3793346M1		**1**	SEAL	JOINT ETANCHEITE PARAOLIO	DICHTRING RETEN
21	3019639X91	M14	**1**	PLUG	BOUCHON TAPPO	VERSCHL.STOPFEN TAPON
22	3019395X1	21	**1**	O RING	JOINT TORIQUE ANELLO OR	O-RING JUNTA TORICA
23	3019645X91	[B] M22	**1**	PLUG	BOUCHON TAPPO	VERSCHL.STOPFEN TAPON
24	3019398X1	23	**2**	O RING	JOINT TORIQUE ANELLO OR	O-RING JUNTA TORICA
25	3716377M91		**1**	TUBE	TUBE TUBO	ROHR TUBO
26	364777X1		**2**	O RING	JOINT TORIQUE ANELLO OR	O-RING JUNTA TORICA

1-ZP61-017-B

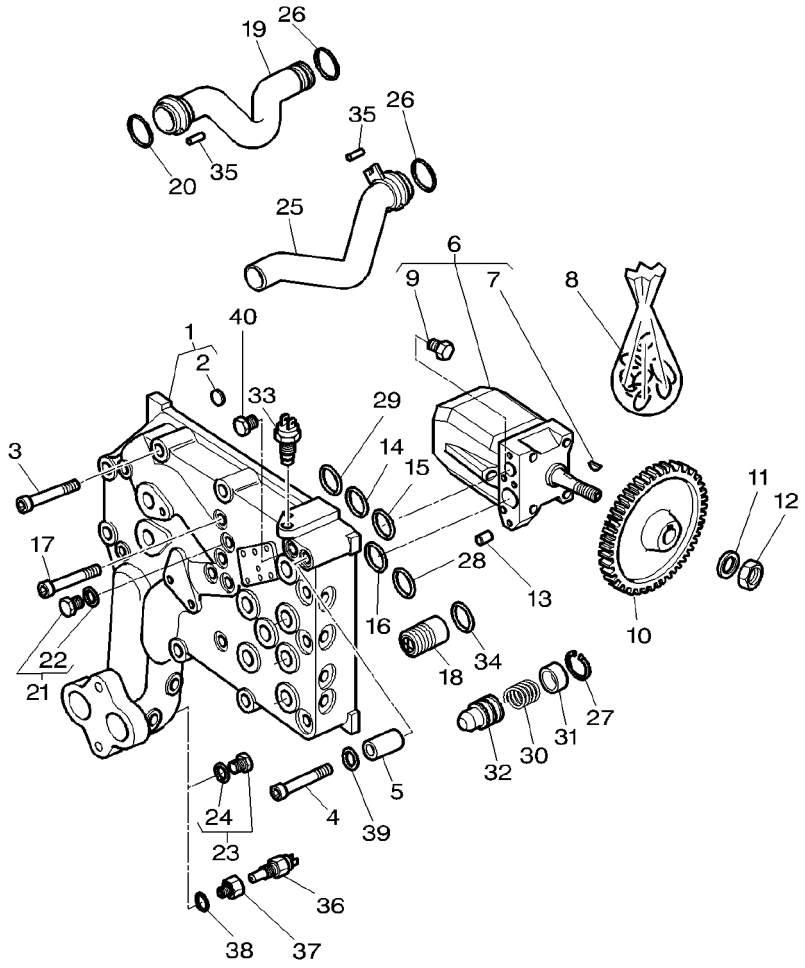

27	1441785X1		**1**	CLIP	CLIP FERMAGLIO	SCHELLE CRAPA RETEN
28	***1007240M1***	∅ 9,2X2,62MM	**2**	O RING	JOINT TORIQUE ANELLO OR	O-RING JUNTA TORICA
29	195562M1	∅ 10,77X2,62MM	**1**	O RING	JOINT TORIQUE ANELLO OR	O-RING JUNTA TORICA
30	3715619M1		**1**	SPRING	RESSORT MOLLA	FEDER MUELLE
31	3715618M1		**1**	CUP	COUPELLE SCODELLINO	LAUFRING CUBETA
32	3715616M1	22BARS	**1**	NON RETURN VALVE	CLAPET VALVOLA NO RITOR	RUCKSCHLAGVENTIL VALVULA DE GRANO
33	***3381387M4***		**1**	LOW PR.OIL TRMTR	TR HUILE BASSEPR SENSORE PRESS.	DRUCKSCHNIEDERDR TRANS.ACEITE BP
34	359300X1		**1**	O RING	JOINT TORIQUE ANELLO OR	O-RING JUNTA TORICA
35	1441722X1	∅ 3X16MM	**2**	PIN	GOUPILLE PERNO	BOLZEN PASADOR
36	***3790121M1***	[A]	**1**	THERMOCONTACT	THERMOCONTACT TERMASTO CONTAT	THERMOKONTAKT TERMOSTA CONTACT
37	3790193M1	[A]	**1**	ADAPTOR	ADAPTATEUR ADATTATORE	REDUZIERNIPPEL ADAPTADOR
38	3019398X1	[A]	**1**	O RING	JOINT TORIQUE ANELLO OR	O-RING JUNTA TORICA
39	3792365M1		**1**	WASHER	RONDELLE RONDELLA	UNTERLEGSCHEIBE ARANDELA
40	3792347M1	∅ 14MM	**1**	PLUG	BOUCHON TAPPO	VERSCHL.STOPFEN TAPON

[A] WITH DYNASHIFT
AVEC DYNASHIFT
MIT DYNASHIFT
CON DYNASHIFT
CON DYNASHIFT

[B] WITH FULL POWERSHIFT
AVEC FULL POWERSHIFT
MIT FULL POWERSHIFT
CON FULL POWERSHIFT
CON FULL POWERSHIFT

Load Sensing	Cover Rh	70-55	With Pump 45cc / With Trailer Braking
Load Sensing	Couvercle Droit		Avec Pompe 45cc / Avec Freinage De Remorque
Load Sensing	Rechtsdeckel		Mit Pumpe 45cc / Mit Anhaengerbremsung
Load Sensing	Tapa Destro		Con Pompa 45cc / Con Frenatura Di Rimorchio
Load Sensing	Coperchio Derecho		Con Bomba 45cc / Con Frenado De Remolque

1-ZP61-012-B

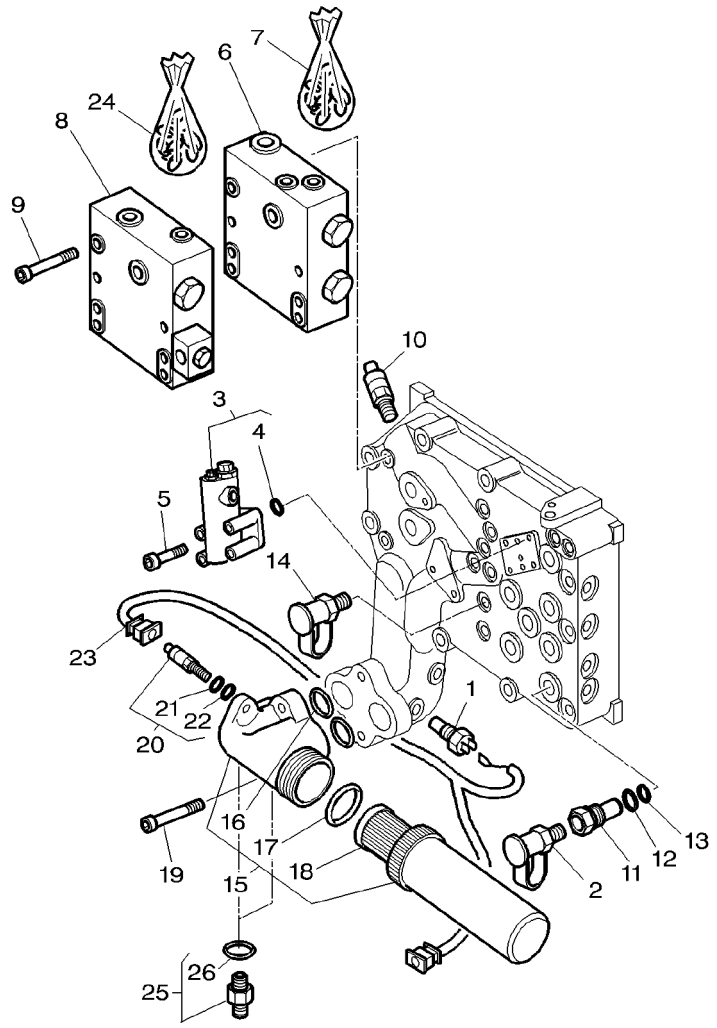

1	***3712668M2***	[E]	
2	***3384387M1***		
3	3716371M1		
4	359291X1	3	
5	3009283X1	M6X30	
6	3790025M1	[A]	
7	3790027M11		
8	3790036M1	[B]	
9	3015017X1	M8X135	
10	3716357M1		
11	3716195M1		
12	831497M1	∅ 16,36X2,21MM	
13	70923841	∅ 12,42X1,78MM	
14	***3384387M1***		
15	3791109M1	[C]	
15	3792618M1	[D]	
16	831196M1	15	
17	842332M1	15	
18	***3618662M1***	15	
19	3000258X1	[C] M10X40	
19	1440351X1	[D] M10X35	
20	***3618663M3***		
21	831497M1	20 ∅ 16,4X2,2	
22	70923841	20 ∅ 12,4X1,8	
23	3715994M2	[D]	
24	3902094M91		

1	SWITCH,INDIRECT	CONTACTEUR INTERRUTTORE IND	KONTAKTSCHALTER CONTACTOR
1	PRESSURE INTAKE	PRISE PRESSION PRESA PRESSIONE	ANSAUGDRUCK ENTRADA PRESION
1	ADJUSTER	REGLEUR CILINDRO SOLLEV.	EINSTELLVORR AJUSTADOR
3	O RING	JOINT TORIQUE ANELLO OR	O-RING JUNTA TORICA
4	SCREW	VIS VITE	SCHRAUBE TORNILLO
1	SAFETY VALVE	BLOC DE SECURITE VALVOLA SICUREZZ	SICHERHEITVENTIL VALVULA SEGURIDA
1	KIT, JOINT	JEU JOINTS KIT GIUNTO	DICHTUNGSSATZ JUEGO JUNTAS
1	SAFETY VALVE	BLOC DE SECURITE VALVOLA SICUREZZ	SICHERHEITVENTIL VALVULA SEGURIDA
4	SCREW	VIS VITE	SCHRAUBE TORNILLO
1	RESTRICTOR	LIMITEUR LIMITATORE	SPARDUESE LIMITADOR
1	PLUG	BOUCHON TAPPO	VERSCHL.STOPFEN TAPON
1	O RING	JOINT TORIQUE ANELLO OR	O-RING JUNTA TORICA
1	O RING	JOINT TORIQUE ANELLO OR	O-RING JUNTA TORICA
2	PRESSURE INTAKE	PRISE PRESSION PRESA PRESSIONE	ANSAUGDRUCK ENTRADA PRESION
1	FILTER	FILTRE FILTRO	FILTER FILTRO
1	FILTER	FILTRE FILTRO	FILTER FILTRO
2	O RING	JOINT TORIQUE ANELLO OR	O-RING JUNTA TORICA
1	GASKET	JOINT GUARNIZIONE	DICHTSCHEIBE EMPAQUETADURA.
1	FILTER INSERT	ELEMENT FILTRANT ELEMENTO FILTRAN	FILTEREINSATZ SUPLEMENT FILTRO
2	SCREW METRIC	VIS METRIQUE VITE METRICA	SCHRAUBE METR TORNILLO METRICO
2	SCREW METRIC	VIS METRIQUE VITE METRICA	SCHRAUBE METR TORNILLO METRICO
1	INDICATOR	INDICATEUR INDICATORE	ANZEIGER INDICADOR
1	O RING	JOINT TORIQUE ANELLO OR	O-RING JUNTA TORICA
1	O RING	JOINT TORIQUE ANELLO OR	O-RING JUNTA TORICA
1	HARNESS	FAISCEAU FASCIOCAVI	KABELBAUM MAZO CABLES
1	KIT, JOINT	JEU JOINTS KIT GIUNTO	DICHTUNGSSATZ JUEGO JUNTAS

Load Sensing Load Sensing Load Sensing Load Sensing Load Sensing	Cover Rh Couvercle Droit Rechtsdeckel Tapa Destro Coperchio Derecho	70-55	With Pump 45cc / With Trailer Braking Avec Pompe 45cc / Avec Freinage De Remorque Mit Pumpe 45cc / Mit Anhaengerbremsung Con Pompa 45cc / Con Frenatura Di Rimorchio Con Bomba 45cc / Con Frenado De Remolque

1-ZP61-012-B

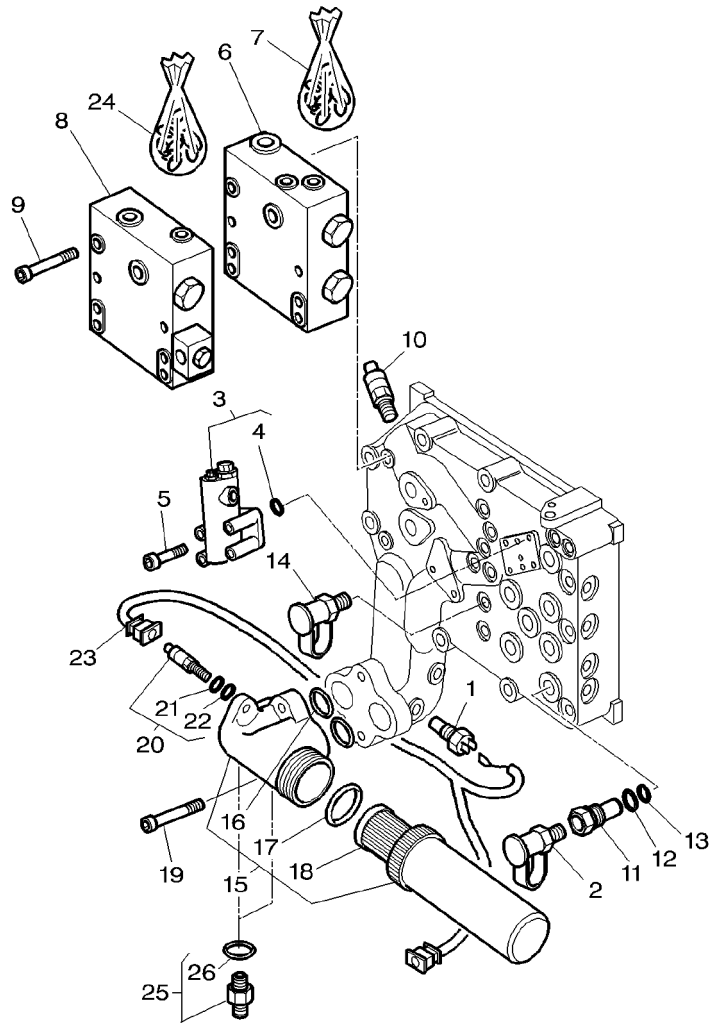

25	3019389X91		[D]	**2**	UNION	RACCORD RACCORDO	VERSCHRAUBUNG RACOR
26	3019398X1	25	[D]	**1**	O RING	JOINT TORIQUE ANELLO OR	O-RING JUNTA TORICA

[A] STEERING
DIRECTION
LENKUNG
DIRECCION
STERZO

[B] BRAKING
FREINAGE
BREMSUNG
FRENADO
FRENATURA

[C] WITH FULL POWERSHIFT
AVEC FULL POWERSHIFT
MIT FULL POWERSHIFT
CON FULL POWERSHIFT
CON FULL POWERSHIFT

[D] WITH DYNASHIFT
AVEC DYNASHIFT
MIT DYNASHIFT
CON DYNASHIFT
CON DYNASHIFT

[E] GREEN
VERT
GRUEN
VERDE
VERDE

Load Sensing	Cover Rh	70-60	With Pump 45cc / Without Trailer Braking
Load Sensing	Couvercle Droit		Avec Pompe 45cc / Sans Freinage De Remorque
Load Sensing	Rechtsdeckel		Mit Pumpe 45cc / Ohne Anhaengerbremse
Load Sensing	Tapa Destro		Con Pompa 45cc / Senza Freno Per Rimorchio
Load Sensing	Coperchio Derecho		Con Bomba 45cc / Sin Freno De Remolque

1-ZP61-011-B

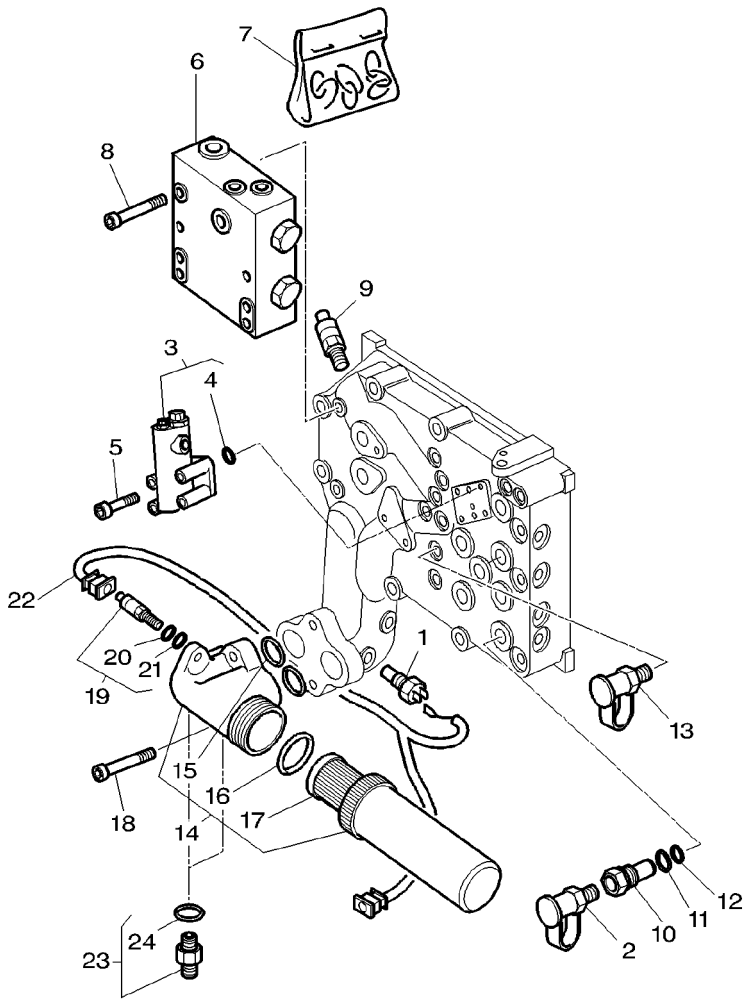

1	***3712668M2***	[C]	**1**	SWITCH,INDIRECT	CONTACTEUR INTERRUTTORE IND	KONTAKTSCHALTER CONTACTOR
2	***3384387M1***		**1**	PRESSURE INTAKE	PRISE PRESSION PRESA PRESSIONE	ANSAUGDRUCK ENTRADA PRESION
3	3716371M1		**1**	ADJUSTER	REGLEUR CILINDRO SOLLEV.	EINSTELLVORR AJUSTADOR
4	359291X1	3	**3**	O RING	JOINT TORIQUE ANELLO OR	O-RING JUNTA TORICA
5	3009283X1	M6X30	**4**	SCREW	VIS VITE	SCHRAUBE TORNILLO
6	3716355M1		**1**	SAFETY VALVE	BLOC DE SECURITE VALVOLA SICUREZZ	SICHERHEITVENTIL VALVULA SEGURIDA
7	3790027M11		**1**	KIT, JOINT	JEU JOINTS KIT GIUNTO	DICHTUNGSSATZ JUEGO JUNTAS
8	1441946X1	M8X75	**4**	SCREW	VIS VITE	SCHRAUBE TORNILLO
9	3716357M1		**1**	RESTRICTOR	LIMITEUR LIMITATORE	SPARDUESE LIMITADOR
10	3716195M1		**1**	PLUG	BOUCHON TAPPO	VERSCHL.STOPFEN TAPON
11	831497M1	∅ 16,36X2,21MM	**1**	O RING	JOINT TORIQUE ANELLO OR	O-RING JUNTA TORICA
12	70923841	∅ 12,42X1,78MM	**1**	O RING	JOINT TORIQUE ANELLO OR	O-RING JUNTA TORICA
13	***3384387M1***		**2**	PRESSURE INTAKE	PRISE PRESSION PRESA PRESSIONE	ANSAUGDRUCK ENTRADA PRESION
14	3791109M1	[A]	**1**	FILTER	FILTRE FILTRO	FILTER FILTRO
14	3792618M1	[B]	**1**	FILTER	FILTRE FILTRO	FILTER FILTRO
15	831196M1	14	**2**	O RING	JOINT TORIQUE ANELLO OR	O-RING JUNTA TORICA
16	842332M1	14	**1**	GASKET	JOINT GUARNIZIONE	DICHTSCHEIBE EMPAQUETADURA.
17	***3618662M1***	14	**1**	FILTER INSERT	ELEMENT FILTRANT ELEMENTO FILTRAN	FILTEREINSATZ SUPLEMENT FILTRO
18	3000258X1	[A] M10X40	**2**	SCREW METRIC	VIS METRIQUE VITE METRICA	SCHRAUBE METR TORNILLO METRICO
18	1440351X1	[B] M10X35	**2**	SCREW METRIC	VIS METRIQUE VITE METRICA	SCHRAUBE METR TORNILLO METRICO
19	***3618663M3***		**1**	INDICATOR	INDICATEUR INDICATORE	ANZEIGER INDICADOR
20	831497M1	19 ∅ 16,4X2,2	**1**	O RING	JOINT TORIQUE ANELLO OR	O-RING JUNTA TORICA
21	70923841	19 ∅ 12,4X1,8	**1**	O RING	JOINT TORIQUE ANELLO OR	O-RING JUNTA TORICA
22	3715994M2	[B]	**1**	HARNESS	FAISCEAU FASCIOCAVI	KABELBAUM MAZO CABLES
23	3019389X91	[B]	**2**	UNION	RACCORD RACCORDO	VERSCHRAUBUNG RACOR
24	3019398X1	23	**1**	O RING	JOINT TORIQUE ANELLO OR	O-RING JUNTA TORICA

Load Sensing Load Sensing Load Sensing Load Sensing Load Sensing	Cover Rh Couvercle Droit Rechtsdeckel Tapa Destro Coperchio Derecho	70-60	With Pump 45cc / Without Trailer Braking Avec Pompe 45cc / Sans Freinage De Remorque Mit Pumpe 45cc / Ohne Anhaengerbremse Con Pompa 45cc / Senza Freno Per Rimorchio Con Bomba 45cc / Sin Freno De Remolque

1-ZP61-011-B

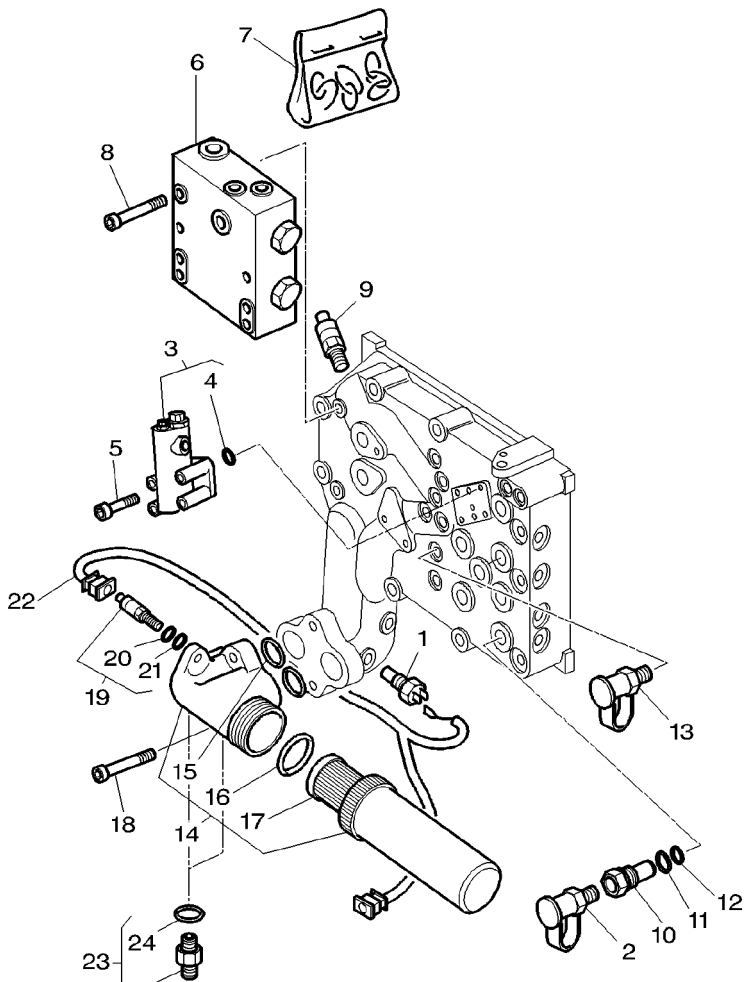

[A] WITH FULL POWERSHIFT
AVEC FULL POWERSHIFT
MIT FULL POWERSHIFT
CON FULL POWERSHIFT
CON FULL POWERSHIFT

[B] WITH DYNASHIFT
AVEC DYNASHIFT
MIT DYNASHIFT
CON DYNASHIFT
CON DYNASHIFT

[C] GREEN
VERT
GRUEN
VERDE
VERDE

1-ZP31-002-A

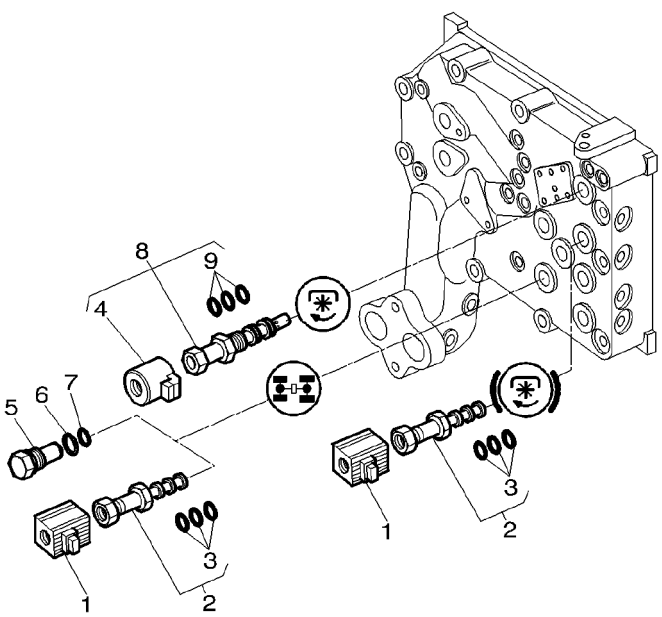

1	***3619763M1***			**2**	SOLENOID	SOLENOIDE SOLENOIDE	MAGNETSPULE SOLENOIDE
2	***3619762M1***			**2**	SPOOL	TIROIR ROCCHETTO	STEUERSCHIEBER CARRETE
3	3900994M91	2		**X**	KIT, JOINT	JEU JOINTS KIT GIUNTO	DICHTUNGSSATZ JUEGO JUNTAS
4	3791412M1	8		**1**	SOLENOID	SOLENOIDE SOLENOIDE	MAGNETSPULE SOLENOIDE
5	3381874M1			**1**	PLUG	BOUCHON TAPPO	VERSCHL.STOPFEN TAPON
6	831497M1			**1**	O RING	JOINT TORIQUE ANELLO OR	O-RING JUNTA TORICA
7	363510X1			**1**	O RING	JOINT TORIQUE ANELLO OR	O-RING JUNTA TORICA
8	3793575M1	⇒	3791399m91	**1**	ELECTROVALVE	ELECTROVANNE ELETTROVALVOLA	ELECTRON.VENTIL ELECTROVALVULA
9	3902774M92	8		**1**	KIT, JOINT	JEU JOINTS KIT GIUNTO	DICHTUNGSSATZ JUEGO JUNTAS

Hydraulics **Hydraulique** **Hydraulische Anlage** **Idraulici** **Hidraulicos**	**Hydraulic Cover Rh** **Couvercle Droit** **Rechtsdeckel** **Tapa Destro** **Coperchio Derecho**	**70-70**	**With Pump 45cc / Hydr. Lines** **Avec Pompe 45cc / Tuyauteries** **Mit Pumpe 45cc / Leitungen** **Con Pompa 45cc / Tubazioni** **Con Bomba 45cc / Circuito**

1-ZP31-003-D

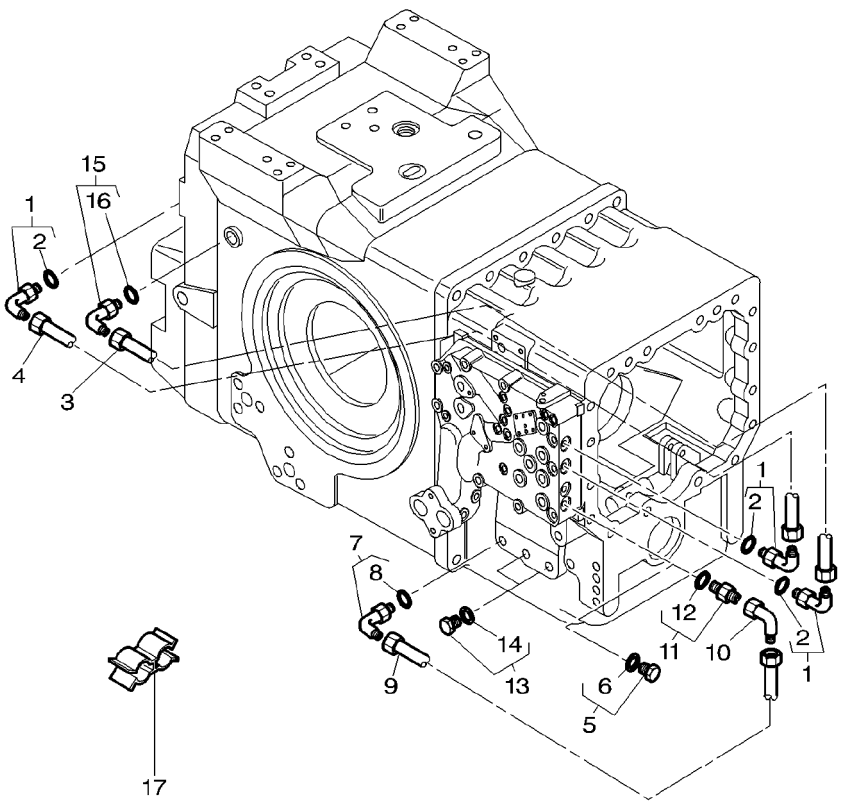

1	3019412X91			**3**	ELBOW	COUDE GOMITO	WINKELSTUECK CODO
2	3019395X1	1		**1**	O RING	JOINT TORIQUE ANELLO OR	O-RING JUNTA TORICA
3	3791375M91			**1**	TUBE	TUBE TUBO	ROHR TUBO
4	3791376M91			**1**	TUBE	TUBE TUBO	ROHR TUBO
5	3019639X91			**1**	PLUG	BOUCHON TAPPO	VERSCHL.STOPFEN TAPON
6	3019395X1	5		**1**	O RING	JOINT TORIQUE ANELLO OR	O-RING JUNTA TORICA
7	3385713M91			**1**	UNION	RACCORD RACCORDO	VERSCHRAUBUNG RACOR
8	831497M1	7		**1**	O RING	JOINT TORIQUE ANELLO OR	O-RING JUNTA TORICA
9	3791419M91			**1**	TUBE	TUBE TUBO	ROHR TUBO
10	365233X1			**1**	ELBOW	COUDE GOMITO	WINKELSTUECK CODO
11	3019700X91			**1**	UNION	RACCORD RACCORDO	VERSCHRAUBUNG RACOR
12	3019394X1	11		**1**	O RING	JOINT TORIQUE ANELLO OR	O-RING JUNTA TORICA
13	3019645X91		M22X1,5	**2**	PLUG	BOUCHON TAPPO	VERSCHL.STOPFEN TAPON
14	3019398X1	13		**1**	O RING	JOINT TORIQUE ANELLO OR	O-RING JUNTA TORICA
15	3019412X91		J062012	**1**	ELBOW	COUDE GOMITO	WINKELSTUECK CODO
15	3793772M91		J062013	**1**	JET	GICLEUR GETTO	SPRITZDUESE SURTIDOR
16	3019395X1	15		**1**	O RING	JOINT TORIQUE ANELLO OR	O-RING JUNTA TORICA
17	3581696M1			**2**	CLAMP	COLLIER FASCETTA	HALTESCHELLE ABRAZADERA

Hydraulics **Hydraulique** **Hydraulische Anlage** **Idraulici** **Hidraulicos**	**Hydraulic Cover Rh** **Couvercle Droit** **Rechtsdeckel** **Tapa Destro** **Coperchio Derecho**	**70-75**	**With Pump 60cc / Electrovalves** **Avec Pompe 60cc / Electrovannes** **Mit Pumpe 60cc / Electron. Ventil** **Con Pompa 60cc / Elettrovalvola** **Con Bomba 60cc / Electrovalvulas**

1-ZP31-001-A

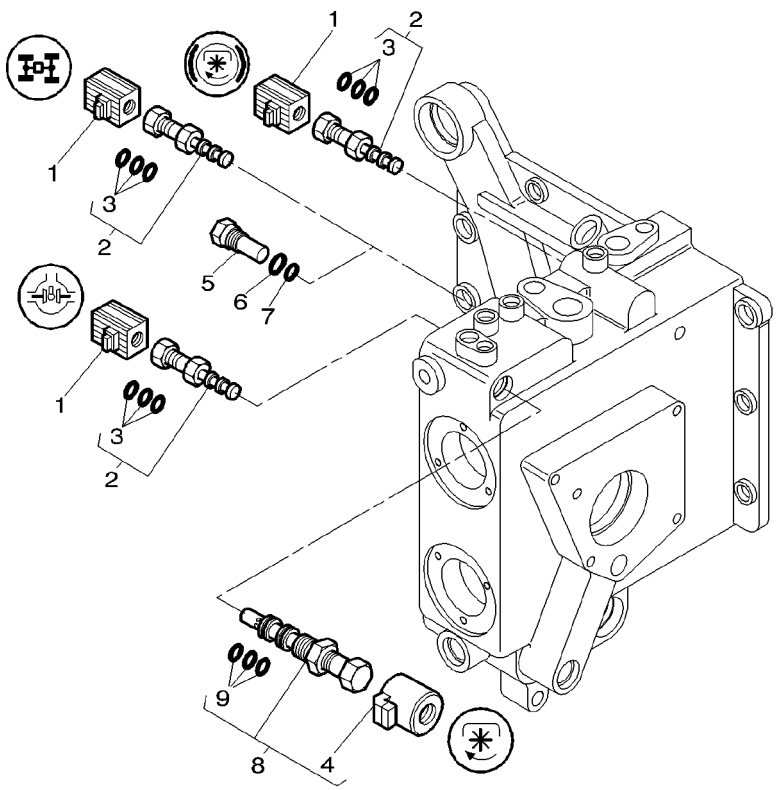

1	***3619763M1***			**3**	SOLENOID	SOLENOIDE SOLENOIDE	MAGNETSPULE SOLENOIDE
2	***3619762M1***			**3**	SPOOL	TIROIR ROCCHETTO	STEUERSCHIEBER CARRETE
3	3900994M91	2		**X**	KIT, JOINT	JEU JOINTS KIT GIUNTO	DICHTUNGSSATZ JUEGO JUNTAS
4	3791412M1	8		**1**	SOLENOID	SOLENOIDE SOLENOIDE	MAGNETSPULE SOLENOIDE
5	3381874M1			**1**	PLUG	BOUCHON TAPPO	VERSCHL.STOPFEN TAPON
6	831497M1			**1**	O RING	JOINT TORIQUE ANELLO OR	O-RING JUNTA TORICA
7	363510X1			**1**	O RING	JOINT TORIQUE ANELLO OR	O-RING JUNTA TORICA
8	3793575M1	⇒	3791399m91	**1**	ELECTROVALVE	ELECTROVANNE ELETTROVALVOLA	ELECTRON.VENTIL ELECTROVALVULA
9	3902774M92	8		**1**	KIT, JOINT	JEU JOINTS KIT GIUNTO	DICHTUNGSSATZ JUEGO JUNTAS

Load Sensing	Cover Rh
Load Sensing	Couvercle Droit
Load Sensing	Rechtsdeckel
Load Sensing	Tapa Destro
Load Sensing	Coperchio Derecho

70-80

With Pump 45cc / Hydr. Lines / With Trailor Braki Ng
Avec Pompe 45cc / Tuyauteries / Avec Freinage De Remorque
Mit Pumpe 45cc / Leitungen / Mit Anhaengerbremsung
Con Pompa 45cc / Tubazioni / Con Frenatura Di Rimo Rchio
Con Bomba 45cc / Circuito / Con Frenado De Remorq Ue

1-ZP61-014-C

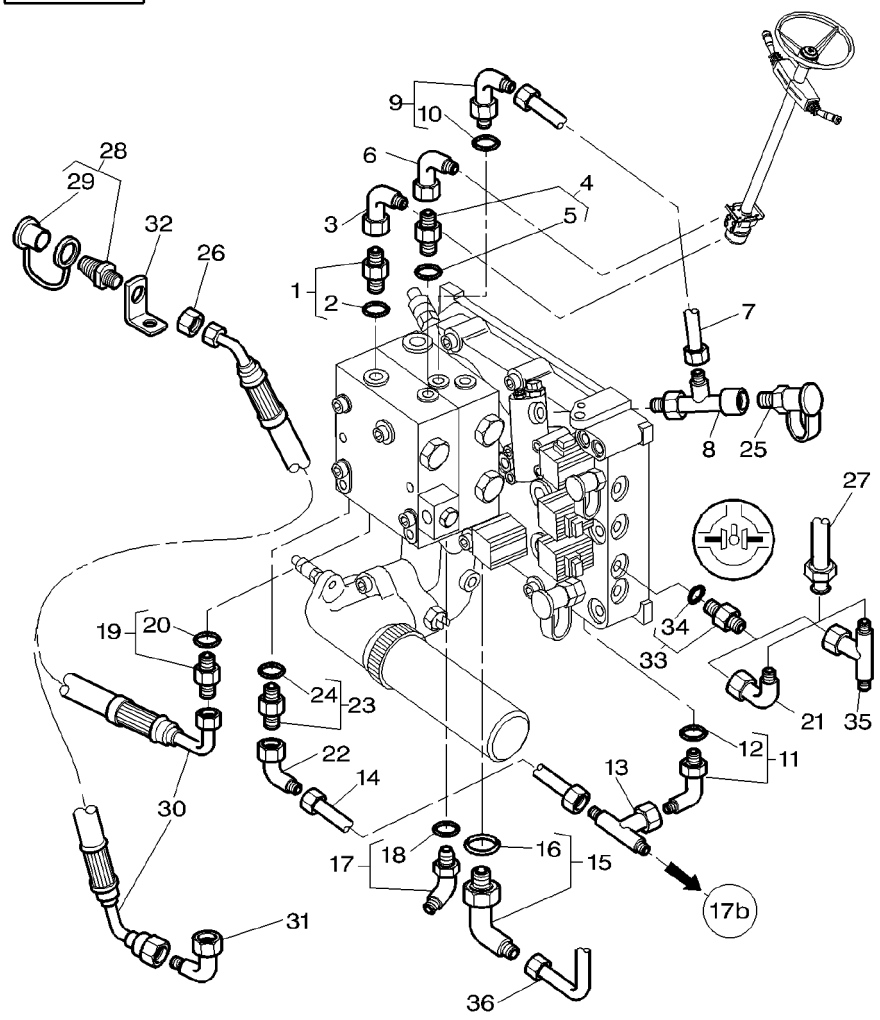

1	3019658X91	M22	1	UNION	RACCORD RACCORDO	VERSCHRAUBUNG RACOR
2	3019398X1	1	1	O RING	JOINT TORIQUE ANELLO OR	O-RING JUNTA TORICA
3	365233X1		1	ELBOW	COUDE GOMITO	WINKELSTUECK CODO
4	3019379X91	M14	1	UNION	RACCORD RACCORDO	VERSCHRAUBUNG RACOR
5	3019395X1	4	1	O RING	JOINT TORIQUE ANELLO OR	O-RING JUNTA TORICA
6	364603X1	9/16"	1	ELBOW	COUDE GOMITO	WINKELSTUECK CODO
7	3790074M91		1	TUBE	TUBE TUBO	ROHR TUBO
8	3712689M1		1	UNION	RACCORD RACCORDO	VERSCHRAUBUNG RACOR
9	3019694X91	M14	1	UNION	RACCORD RACCORDO	VERSCHRAUBUNG RACOR
10	3019395X1	9	1	O RING	JOINT TORIQUE ANELLO OR	O-RING JUNTA TORICA
11	3019416X91	M18	1	ELBOW	COUDE GOMITO	WINKELSTUECK CODO
12	3019397X1	11	1	O RING	JOINT TORIQUE ANELLO OR	O-RING JUNTA TORICA
13	367261X1	7/8"	1	UNION	RACCORD RACCORDO	VERSCHRAUBUNG RACOR
14	3716780M92		1	TUBE	TUBE TUBO	ROHR TUBO
15	3019422X91		1	UNION	RACCORD RACCORDO	VERSCHRAUBUNG RACOR
16	3019399X1	15 M33	1	O RING	JOINT TORIQUE ANELLO OR	O-RING JUNTA TORICA
17	3019584X91	M14	1	UNION	RACCORD RACCORDO	VERSCHRAUBUNG RACOR
18	3019395X1	17	1	O RING	JOINT TORIQUE ANELLO OR	O-RING JUNTA TORICA
19	3019658X91	M22	1	UNION	RACCORD RACCORDO	VERSCHRAUBUNG RACOR
20	3019398X1	19	1	O RING	JOINT TORIQUE ANELLO OR	O-RING JUNTA TORICA
21	365233X1	3/4"	1	ELBOW	COUDE GOMITO	WINKELSTUECK CODO
22	70921325	7/8"	1	ELBOW NIPPLE	RACCORD COUDE NIPPLO GOMITO	WINKELSTUTZEN CODO DE UNION
23	3019387X91	M22	1	UNION	RACCORD RACCORDO	VERSCHRAUBUNG RACOR
24	3019398X1	23	1	O RING	JOINT TORIQUE ANELLO OR	O-RING JUNTA TORICA
25	3712707M1		1	INTAKE	PRISE ASPIRAZIONE	SAUGROHR ENTRADA
26	1442336X1		1	NUT	ECROU DADO	MUTTER TUERCA

Load Sensing	Cover Rh	70-80
Load Sensing	Couvercle Droit	
Load Sensing	Rechtsdeckel	
Load Sensing	Tapa Destro	
Load Sensing	Coperchio Derecho	

With Pump 45cc / Hydr. Lines / With Trailor Braki Ng
Avec Pompe 45cc / Tuyauteries / Avec Freinage De Remorque
Mit Pumpe 45cc / Leitungen / Mit Anhaengerbremsung
Con Pompa 45cc / Tubazioni / Con Frenatura Di Rimo Rchio
Con Bomba 45cc / Circuito / Con Frenado De Remorq Ue

1-ZP61-014-C

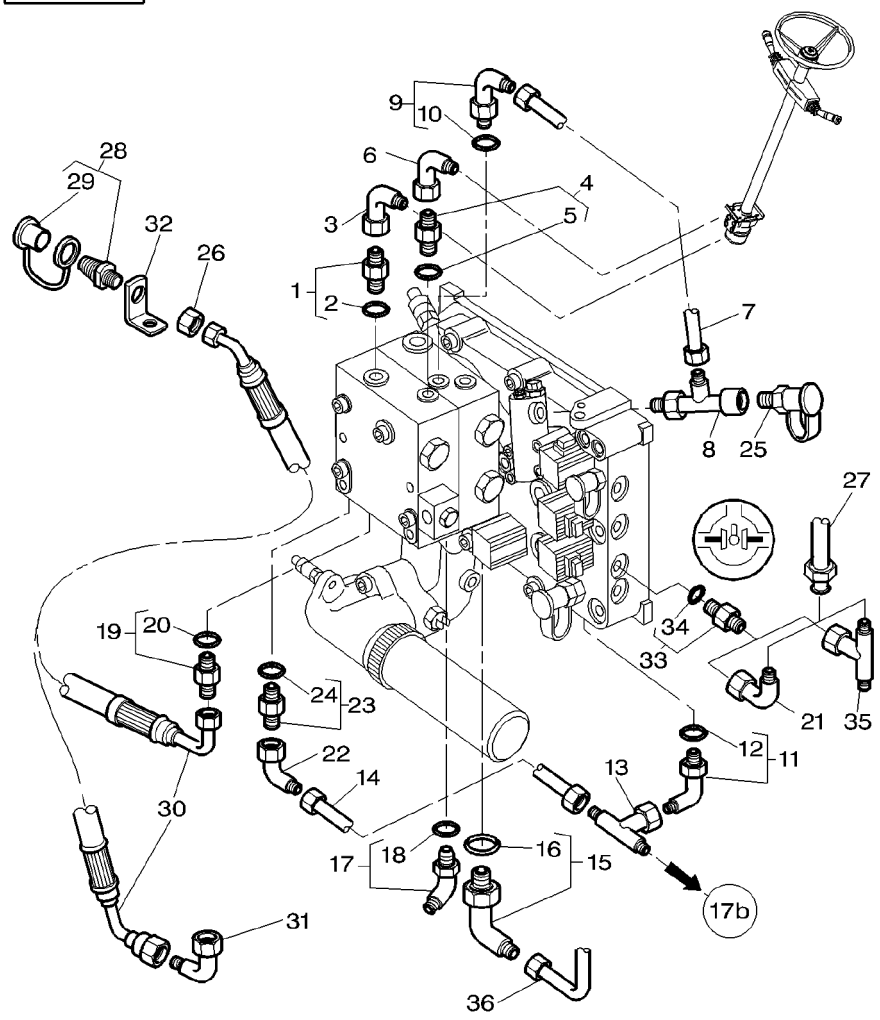

27	3791202M91		1	TUBE	TUBE TUBO	ROHR TUBO
28	***3581307M2***		1	PRESSURE VALVE	VALVE VALVOLA PRESSION	DRUCKVENTIL VALVULA PRESION
29	3616259M1	28	1	PLUG	BOUCHON TAPPO	VERSCHL.STOPFEN TAPON
30	3791611M1	◄► 1480MM	1	HYDR HOSE	FLEXIBLE TUBOFLEX IDRAUL	HYDR SCHLAUCH TUBO HIDRAULICO
31	365233X1	▬▶ 26/08/1999	1	ELBOW	COUDE GOMITO	WINKELSTUECK CODO
32	3792736M1		1	SUPPORT	SUPPORT SUPPORTO	LAGERUNG DISPOS.DE SOSTEN
33	3019700X91	3/4"−M14	1	UNION	RACCORD RACCORDO	VERSCHRAUBUNG RACOR
34	3019394X1	33	1	O RING	JOINT TORIQUE ANELLO OR	O−RING JUNTA TORICA
35	364735X1	3/4"	1	UNION	RACCORD RACCORDO	VERSCHRAUBUNG RACOR
36	3716397M1		1	TUBE	TUBE TUBO	ROHR TUBO

Load Sensing With Power Shuttle	Cover Rh	70-85
Load Sensing Avec Inverseur Sous Couple	Couvercle Droit	
Load Sensing Mit Unter Drehmoment	Rechtsdeckel	
Load Sensing Con Sotto Coppia	Tapa Destro	
Load Sensing Con Inversor Sub Par	Coperchio Derecho	

With Pump 45cc / Hydr. Lines / With Trailor Braki Ng
Avec Pompe 45cc / Tuyauteries / Avec Freinage De Remorque
Mit Pumpe 45cc / Leitungen / Mit Anhaengerbremsung
Con Pompa 45cc / Tubazioni / Con Frenatura Di Rimo Rchio
Con Bomba 45cc / Circuito / Con Frenado De Remorq Ue

1-ZP62-002-A

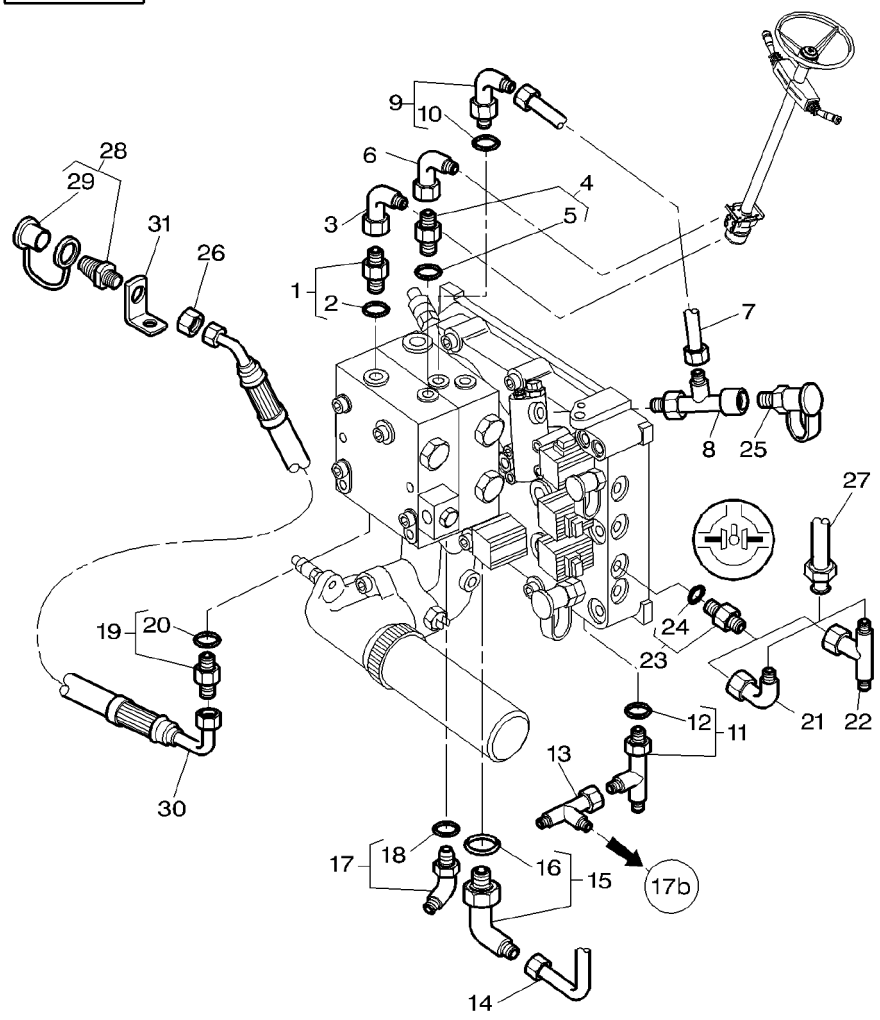

1	3019658X91	M22	1	UNION	RACCORD RACCORDO	VERSCHRAUBUNG RACOR
2	3019398X1	1	1	O RING	JOINT TORIQUE ANELLO OR	O-RING JUNTA TORICA
3	365233X1		1	ELBOW	COUDE GOMITO	WINKELSTUECK CODO
4	3019379X91	M14	1	UNION	RACCORD RACCORDO	VERSCHRAUBUNG RACOR
5	3019395X1	4	1	O RING	JOINT TORIQUE ANELLO OR	O-RING JUNTA TORICA
6	364603X1	9/16"	1	ELBOW	COUDE GOMITO	WINKELSTUECK CODO
7	3790074M91		1	TUBE	TUBE TUBO	ROHR TUBO
8	3712689M1		1	UNION	RACCORD RACCORDO	VERSCHRAUBUNG RACOR
9	3019694X91	M14	1	UNION	RACCORD RACCORDO	VERSCHRAUBUNG RACOR
10	3019395X1	9	1	O RING	JOINT TORIQUE ANELLO OR	O-RING JUNTA TORICA
11	3019627X91		1	TEEPIECE	TE RACCORDO A T	T-STUECK PIEZA EN T
12	3019397X1	11	1	O RING	JOINT TORIQUE ANELLO OR	O-RING JUNTA TORICA
13	364704X1		1	TEEPIECE	TE RACCORDO A T	T-STUECK PIEZA EN T
14	3716397M1		1	TUBE	TUBE TUBO	ROHR TUBO
15	3019422X91		1	UNION	RACCORD RACCORDO	VERSCHRAUBUNG RACOR
16	3019399X1	15 M33	1	O RING	JOINT TORIQUE ANELLO OR	O-RING JUNTA TORICA
17	3019584X91	M14	1	UNION	RACCORD RACCORDO	VERSCHRAUBUNG RACOR
18	3019395X1	17	1	O RING	JOINT TORIQUE ANELLO OR	O-RING JUNTA TORICA
19	3019658X91	M22	1	UNION	RACCORD RACCORDO	VERSCHRAUBUNG RACOR
20	3019398X1	19	1	O RING	JOINT TORIQUE ANELLO OR	O-RING JUNTA TORICA
21	365233X1	3/4"	1	ELBOW	COUDE GOMITO	WINKELSTUECK CODO
22	364735X1	3/4"	1	UNION	RACCORD RACCORDO	VERSCHRAUBUNG RACOR
23	3019700X91	3/4"-M14	1	UNION	RACCORD RACCORDO	VERSCHRAUBUNG RACOR
24	3019394X1	33	1	O RING	JOINT TORIQUE ANELLO OR	O-RING JUNTA TORICA
25	3712707M1		1	INTAKE	PRISE ASPIRAZIONE	SAUGROHR ENTRADA
26	1442336X1		1	NUT	ECROU DADO	MUTTER TUERCA

Load Sensing With Power Shuttle	Cover Rh	70-85	With Pump 45cc / Hydr. Lines / With Trailor Braki Ng
Load Sensing Avec Inverseur Sous Couple	Couvercle Droit		Avec Pompe 45cc / Tuyauteries / Avec Freinage De Remorque
Load Sensing Mit Unter Drehmoment	Rechtsdeckel		Mit Pumpe 45cc / Leitungen / Mit Anhaengerbremsung
Load Sensing Con Sotto Coppia	Tapa Destro		Con Pompa 45cc / Tubazioni / Con Frenatura Di Rimo Rchio
Load Sensing Con Inversor Sub Par	Coperchio Derecho		Con Bomba 45cc / Circuito / Con Frenado De Remorq Ue

1-ZP62-002-A

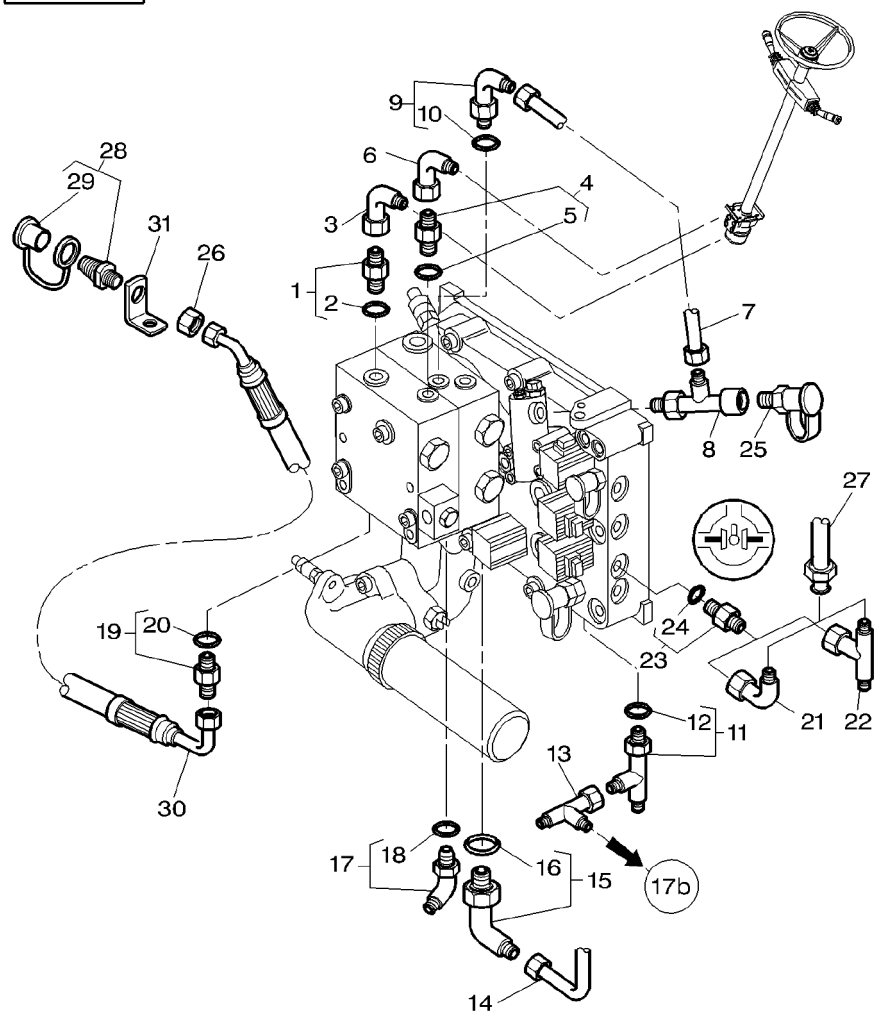

27	3791202M91			1	TUBE	TUBE TUBO	ROHR TUBO
28	***3581307M2***			1	PRESSURE VALVE	VALVE VALVOLA PRESSION	DRUCKVENTIL VALVULA PRESION
29	3616259M1	28		1	PLUG	BOUCHON TAPPO	VERSCHL.STOPFEN TAPON
30	3791611M1	◄►	1480MM	1	HYDR HOSE	FLEXIBLE TUBOFLEX IDRAUL	HYDR SCHLAUCH TUBO HIDRAULICO
31	3792736M1			1	SUPPORT	SUPPORT SUPPORTO	LAGERUNG DISPOS.DE SOSTEN

Load Sensing	Cover Rh	70-90
Load Sensing	Couvercle Droit	
Load Sensing	Rechtsdeckel	
Load Sensing	Tapa Destro	
Load Sensing	Coperchio Derecho	

With Pump 45cc / Hydr. Lines / Without Trailor Bra King
Avec Pompe 45cc / Tuyauteries / Sans Freinage De R Emorque
Mit Pumpe 45cc / Leitungen / Ohne Anhaengerbremsun G
Con Pompa 45cc / Tubazioni / Senza Frenatura Di Ri Morchio
Con Bomba 45cc / Circuito / Sin Frenado De Remorq Ue

1-ZP61-013-B

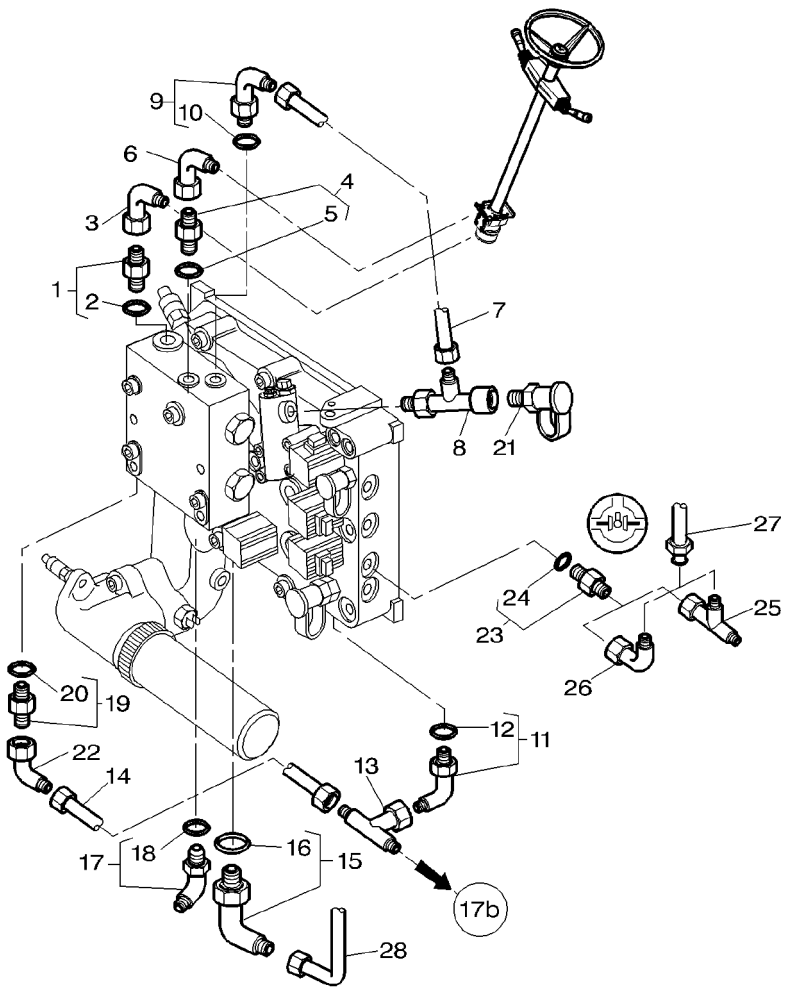

1	3019658X91	M22	1	UNION	RACCORD RACCORDO	VERSCHRAUBUNG RACOR
2	3019398X1	1	1	O RING	JOINT TORIQUE ANELLO OR	O-RING JUNTA TORICA
3	365233X1		1	ELBOW	COUDE GOMITO	WINKELSTUECK CODO
4	3019379X91	M14	1	UNION	RACCORD RACCORDO	VERSCHRAUBUNG RACOR
5	3019395X1	4	1	O RING	JOINT TORIQUE ANELLO OR	O-RING JUNTA TORICA
6	364603X1	9/16"	1	ELBOW	COUDE GOMITO	WINKELSTUECK CODO
7	3790074M91		1	TUBE	TUBE TUBO	ROHR TUBO
8	3712689M1		1	UNION	RACCORD RACCORDO	VERSCHRAUBUNG RACOR
9	3019694X91	M14	1	UNION	RACCORD RACCORDO	VERSCHRAUBUNG RACOR
10	3019395X1	9	1	O RING	JOINT TORIQUE ANELLO OR	O-RING JUNTA TORICA
11	3019416X91	M18	1	ELBOW	COUDE GOMITO	WINKELSTUECK CODO
12	3019397X1	11	1	O RING	JOINT TORIQUE ANELLO OR	O-RING JUNTA TORICA
13	367261X1	7/8"	1	UNION	RACCORD RACCORDO	VERSCHRAUBUNG RACOR
14	3716780M92		1	TUBE	TUBE TUBO	ROHR TUBO
15	3019422X91		1	UNION	RACCORD RACCORDO	VERSCHRAUBUNG RACOR
16	3019399X1	15 M33	1	O RING	JOINT TORIQUE ANELLO OR	O-RING JUNTA TORICA
17	3019584X91	M14	1	UNION	RACCORD RACCORDO	VERSCHRAUBUNG RACOR
18	3019395X1	17	1	O RING	JOINT TORIQUE ANELLO OR	O-RING JUNTA TORICA
19	3019387X91	M22	1	UNION	RACCORD RACCORDO	VERSCHRAUBUNG RACOR
20	3019398X1	19	1	O RING	JOINT TORIQUE ANELLO OR	O-RING JUNTA TORICA
21	3712707M1		1	INTAKE	PRISE ASPIRAZIONE	SAUGROHR ENTRADA
22	70921325	7/8"	1	ELBOW NIPPLE	RACCORD COUDE NIPPLO GOMITO	WINKELSTUTZEN CODO DE UNION
23	3019700X91	3/4"/M14	1	UNION	RACCORD RACCORDO	VERSCHRAUBUNG RACOR
24	3019394X1	23	1	O RING	JOINT TORIQUE ANELLO OR	O-RING JUNTA TORICA
25	364735X1	3:4"	1	UNION	RACCORD RACCORDO	VERSCHRAUBUNG RACOR
26	365233X1	3/4"	1	ELBOW	COUDE GOMITO	WINKELSTUECK CODO

Load Sensing	Cover Rh	70-90
Load Sensing	Couvercle Droit	
Load Sensing	Rechtsdeckel	
Load Sensing	Tapa Destro	
Load Sensing	Coperchio Derecho	

With Pump 45cc / Hydr. Lines / Without Trailor Bra King
Avec Pompe 45cc / Tuyauteries / Sans Freinage De R Emorque
Mit Pumpe 45cc / Leitungen / Ohne Anhaengerbremsun G
Con Pompa 45cc / Tubazioni / Senza Frenatura Di Ri Morchio
Con Bomba 45cc / Circuito / Sin Frenado De Remorq Ue

1-ZP61-013-B

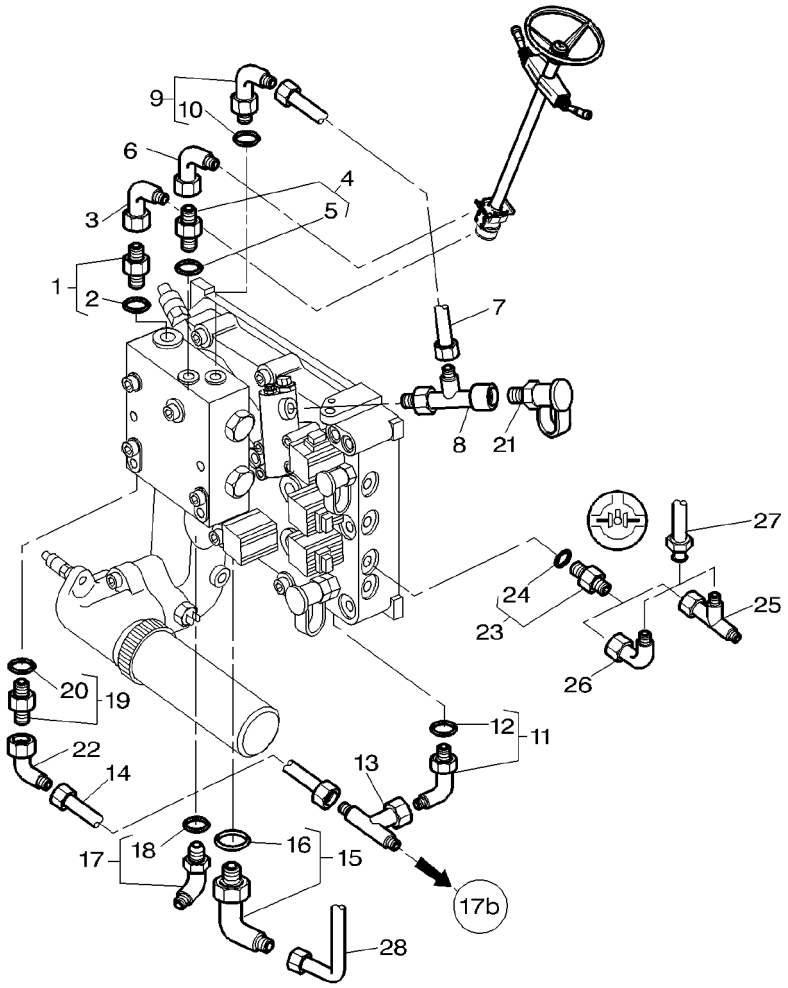

27	3791202M91	1	TUBE	TUBE TUBO	ROHR TUBO
28	3716397M1	1	TUBE	TUBE TUBO	ROHR TUBO

Load Sensing With Power Shuttle	Cover Rh	70-95
Load Sensing Avec Inverseur Sous Couple	Couvercle Droit	
Load Sensing Mit Unter Drehmoment	Rechtsdeckel	
Load Sensing Con Sotto Coppia	Tapa Destro	
Load Sensing Con Inversor Sub Par	Coperchio Derecho	

With Pump 45cc / Hydr. Lines / Without Trailor Bra King
Avec Pompe 45cc / Tuyauteries / Sans Freinage De R Emorque
Mit Pumpe 45cc / Leitungen / Ohne Anhaengerbremsun G
Con Pompa 45cc / Tubazioni / Senza Frenatura Di Ri Morchio
Con Bomba 45cc / Circuito / Sin Frenado De Remorq Ue

1-ZP62-001-A

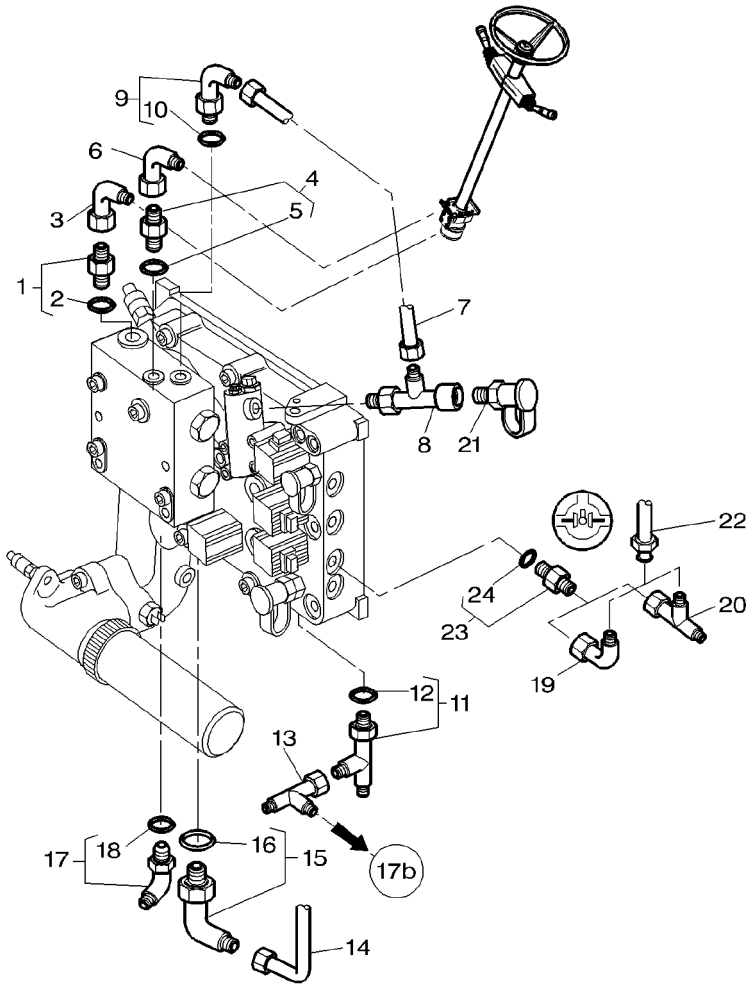

1	3019658X91	M22	1	UNION	RACCORD RACCORDO	VERSCHRAUBUNG RACOR
2	3019398X1	1	1	O RING	JOINT TORIQUE ANELLO OR	O-RING JUNTA TORICA
3	365233X1		1	ELBOW	COUDE GOMITO	WINKELSTUECK CODO
4	3019379X91	M14	1	UNION	RACCORD RACCORDO	VERSCHRAUBUNG RACOR
5	3019395X1	4	1	O RING	JOINT TORIQUE ANELLO OR	O-RING JUNTA TORICA
6	364603X1	9/16"	1	ELBOW	COUDE GOMITO	WINKELSTUECK CODO
7	3790074M91		1	TUBE	TUBE TUBO	ROHR TUBO
8	3712689M1		1	UNION	RACCORD RACCORDO	VERSCHRAUBUNG RACOR
9	3019694X91	M14	1	UNION	RACCORD RACCORDO	VERSCHRAUBUNG RACOR
10	3019395X1	9	1	O RING	JOINT TORIQUE ANELLO OR	O-RING JUNTA TORICA
11	3019627X91		1	TEEPIECE	TE RACCORDO A T	T-STUECK PIEZA EN T
12	3019397X1	11	1	O RING	JOINT TORIQUE ANELLO OR	O-RING JUNTA TORICA
13	364704X1		1	TEEPIECE	TE RACCORDO A T	T-STUECK PIEZA EN T
14	3716397M1		1	TUBE	TUBE TUBO	ROHR TUBO
15	3019422X91		1	UNION	RACCORD RACCORDO	VERSCHRAUBUNG RACOR
16	3019399X1	15 M33	1	O RING	JOINT TORIQUE ANELLO OR	O-RING JUNTA TORICA
17	3019584X91	M14	1	UNION	RACCORD RACCORDO	VERSCHRAUBUNG RACOR
18	3019395X1	17	1	O RING	JOINT TORIQUE ANELLO OR	O-RING JUNTA TORICA
19	365233X1	3/4"	1	ELBOW	COUDE GOMITO	WINKELSTUECK CODO
20	364735X1	3:4"	1	UNION	RACCORD RACCORDO	VERSCHRAUBUNG RACOR
21	3712707M1		1	INTAKE	PRISE ASPIRAZIONE	SAUGROHR ENTRADA
22	3791202M91		1	TUBE	TUBE TUBO	ROHR TUBO
23	3019700X91	3/4"/M14	1	UNION	RACCORD RACCORDO	VERSCHRAUBUNG RACOR
24	3019394X1	23	1	O RING	JOINT TORIQUE ANELLO OR	O-RING JUNTA TORICA

Load Sensing	Cover Rh	70-100	With Pump 45cc / Dual Control Distributor Feeding
Load Sensing	Couvercle Droit		Avec Pompe 45cc / Alimentation Distributeur Dual C Ontrol
Load Sensing	Rechtsdeckel		Mit Pumpe 45cc / Verteilerfutterung Dual Control
Load Sensing	Tapa Destro		Con Pompa 45cc / Alimentazione Distributore Dual C Ontrol
Load Sensing	Coperchio Derecho		Con Bomba 45cc / Alimentacion Distribuidore Dual C Ontrol

1-ZP61-021-B

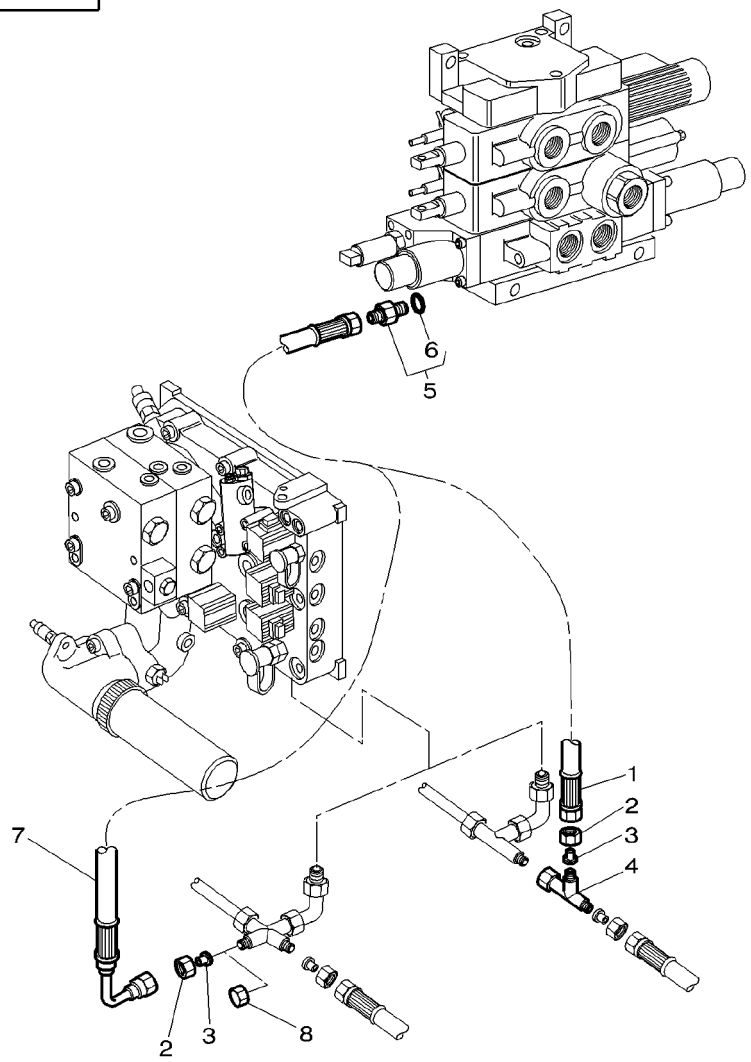

1	3716399M1	➡	H309009	1	HYDR HOSE	FLEXIBLE TUBOFLEX IDRAUL ECROU RACCORD DADO D'UNIONE REDUCTEUR RIDUTTORE TE RACCORDO A T RACCORD RACCORDO JOINT TORIQUE ANELLO OR FLEXIBLE TUBOFLEX IDRAUL CHAPEAU CAPPELLO	HYDR SCHLAUCH TUBO HIDRAULICO ANSCHLUSSMUTTER TUERCA UNION REDUZIERSTUECK REDUCTOR T-STUECK PIEZA EN T VERSCHRAUBUNG RACOR O-RING JUNTA TORICA HYDR SCHLAUCH TUBO HIDRAULICO KAPPE TAPA
2	22576X			1	UNION NUT		
3	356629X1			1	REDUCER		
4	377218X1	➡	H309009	1	TEEPIECE		
5	3019660X91			1	UNION		
6	3019393X1	5		1	O RING		
7	3793445M1	➡	H310010	1	HYDR HOSE		
8	22833X	[A]		1	CAP		

[A] WITHOUT DUAL CONTROL
SANS DUAL CONTROL
OHNE DUAL CONTROL
SENZA DUAL CONTROL
SIN DUAL CONTROL

Hydraulics **Hydraulique** **Hydraulische Anlage** **Idraulici** **Hidraulicos**	**Hydraulic Cover Rh** **Couvercle Droit** **Rechtsdeckel** **Tapa Destro** **Coperchio Derecho**	**70-105**

With Pump 60cc / Hydr. Lines
Avec Pompe 60cc / Tuyauteries
Mit Pumpe 60cc / Leitungen
Con Pompa 60cc / Tubazioni
Con Bomba 60cc / Circuito

1-ZP31-004-D

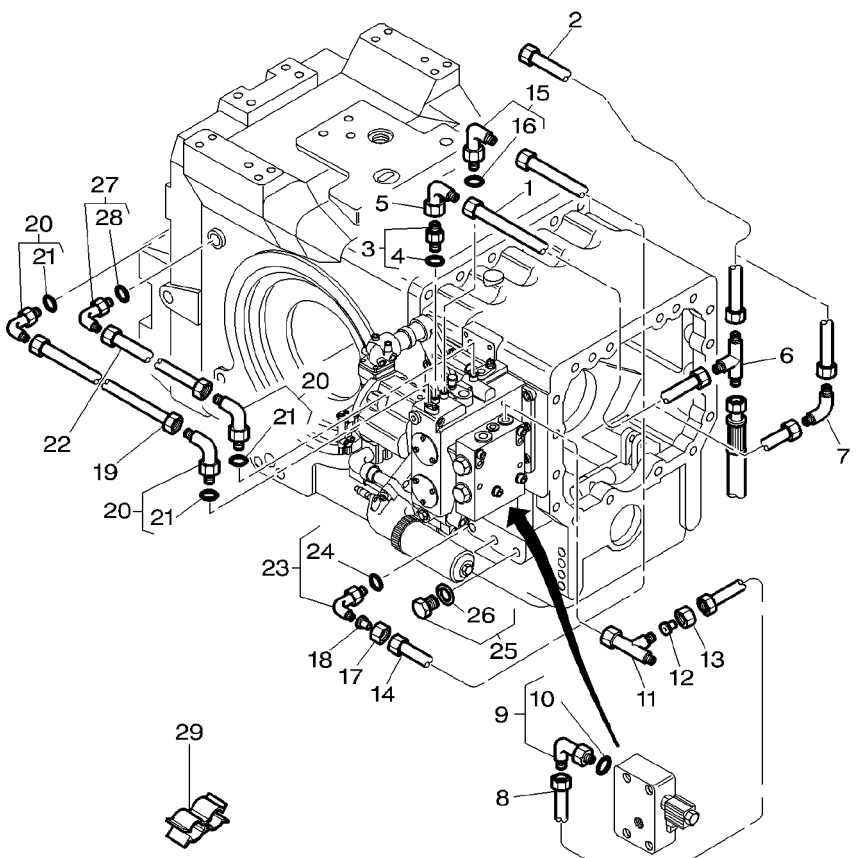

1	3791713M1			**1**	TUBE	TUBE TUBO	ROHR TUBO
2	3791714M1			**1**	TUBE	TUBE TUBO	ROHR TUBO
3	3019381X91		∅ M16X3/4	**1**	UNION	RACCORD RACCORDO	VERSCHRAUBUNG RACOR
4	3019396X1	3		**1**	O RING	JOINT TORIQUE ANELLO OR	O-RING JUNTA TORICA
5	365233X1		∅ 3/4-16	**1**	ELBOW	COUDE GOMITO	WINKELSTUECK CODO
6	356560X1		∅ 3/4-16	**1**	TEEPIECE	TE RACCORDO A T	T-STUECK PIEZA EN T
7	356376X1		∅ 3/4-16	**1**	ELBOW	COUDE GOMITO	WINKELSTUECK CODO
8	3792033M1			**1**	TUBE	TUBE TUBO	ROHR TUBO
9	3019412X91		∅ M14	**1**	ELBOW	COUDE GOMITO	WINKELSTUECK CODO
10	3019395X1	9		**1**	O RING	JOINT TORIQUE ANELLO OR	O-RING JUNTA TORICA
11	364735X1		∅ 3/4-16	**1**	UNION	RACCORD RACCORDO	VERSCHRAUBUNG RACOR
12	380003X1		∅ 1/2-20 /12X8	**1**	UNION	RACCORD RACCORDO	VERSCHRAUBUNG RACOR
13	338773X1			**1**	OLIVE	OLIVE OLIVA	SCHNEIDRING OLIVA
14	3791717M1			**1**	TUBE	TUBE TUBO	ROHR TUBO
15	3019412X91		∅ M14	**1**	ELBOW	COUDE GOMITO	WINKELSTUECK CODO
16	3019395X1	15		**1**	O RING	JOINT TORIQUE ANELLO OR	O-RING JUNTA TORICA
17	195960M1		∅ 3/4	**1**	NUT	ECROU DADO	MUTTER TUERCA
18	356627X1		∅ 9/16-18 /12X10	**1**	ADAPTOR	ADAPTATEUR ADATTATORE	REDUZIERNIPPEL ADAPTADOR
19	3791715M1			**1**	TUBE	TUBE TUBO	ROHR TUBO
20	3019412X91			**3**	ELBOW	COUDE GOMITO	WINKELSTUECK CODO
21	3019395X1	20		**1**	O RING	JOINT TORIQUE ANELLO OR	O-RING JUNTA TORICA
22	3791712M1			**1**	TUBE	TUBE TUBO	ROHR TUBO
23	3385713M91			**1**	UNION	RACCORD RACCORDO	VERSCHRAUBUNG RACOR
24	831497M1	23		**1**	O RING	JOINT TORIQUE ANELLO OR	O-RING JUNTA TORICA
25	3019645X91		M22X1,5	**2**	PLUG	BOUCHON TAPPO	VERSCHL.STOPFEN TAPON
26	3019398X1	25		**1**	O RING	JOINT TORIQUE ANELLO OR	O-RING JUNTA TORICA

Hydraulics **Hydraulique** **Hydraulische Anlage** **Idraulici** **Hidraulicos**	**Hydraulic Cover Rh** **Couvercle Droit** **Rechtsdeckel** **Tapa Destro** **Coperchio Derecho**	**70-105**	**With Pump 60cc / Hydr. Lines** **Avec Pompe 60cc / Tuyauteries** **Mit Pumpe 60cc / Leitungen** **Con Pompa 60cc / Tubazioni** **Con Bomba 60cc / Circuito**

1-ZP31-004-D

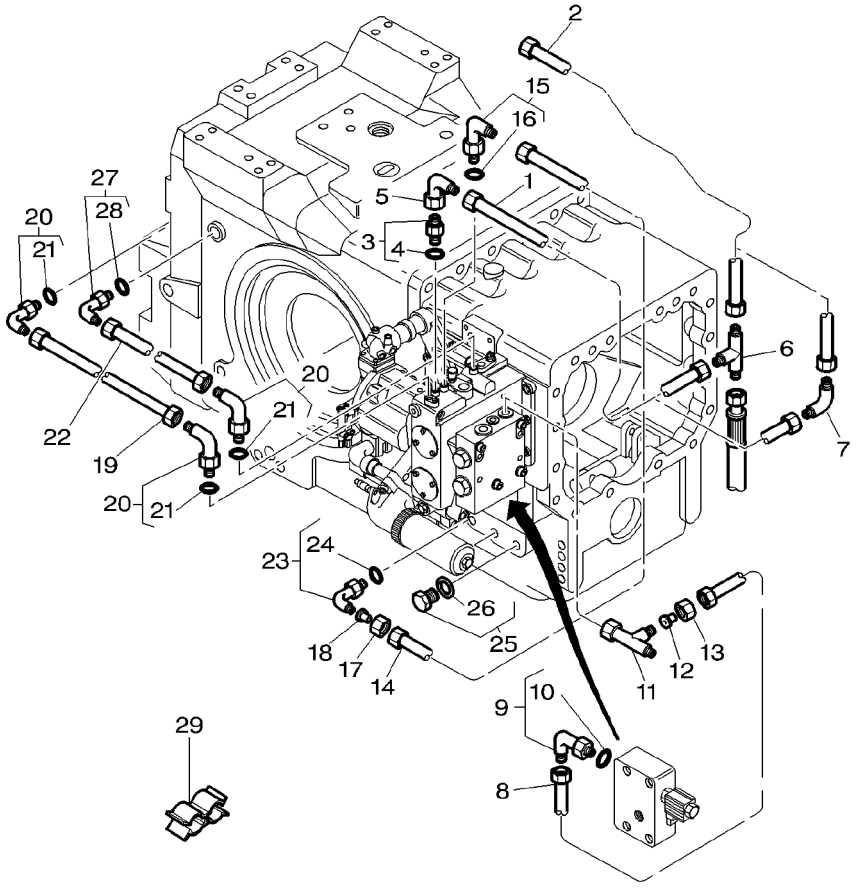

27	3019412X91	➡|	J062012	**1** ELBOW	COUDE GOMITO	WINKELSTUECK CODO
27	3793772M91	➡		J062013	**1** JET	GICLEUR GETTO	SPRITZDUESE SURTIDOR
28	3019395X1	27			**1** O RING	JOINT TORIQUE ANELLO OR	O-RING JUNTA TORICA
29	3581696M1				**2** CLAMP	COLLIER FASCETTA	HALTESCHELLE ABRAZADERA

Load Sensing Load Sensing Load Sensing Load Sensing Load Sensing	Cover Rh Couvercle Droit Rechtsdeckel Tapa Destro Coperchio Derecho	70-110	With Pump 60cc Avec Pompe 60cc Mit Pumpe 60cc Con Pompa 60cc Con Bomba 60cc

1-ZP61-015-A

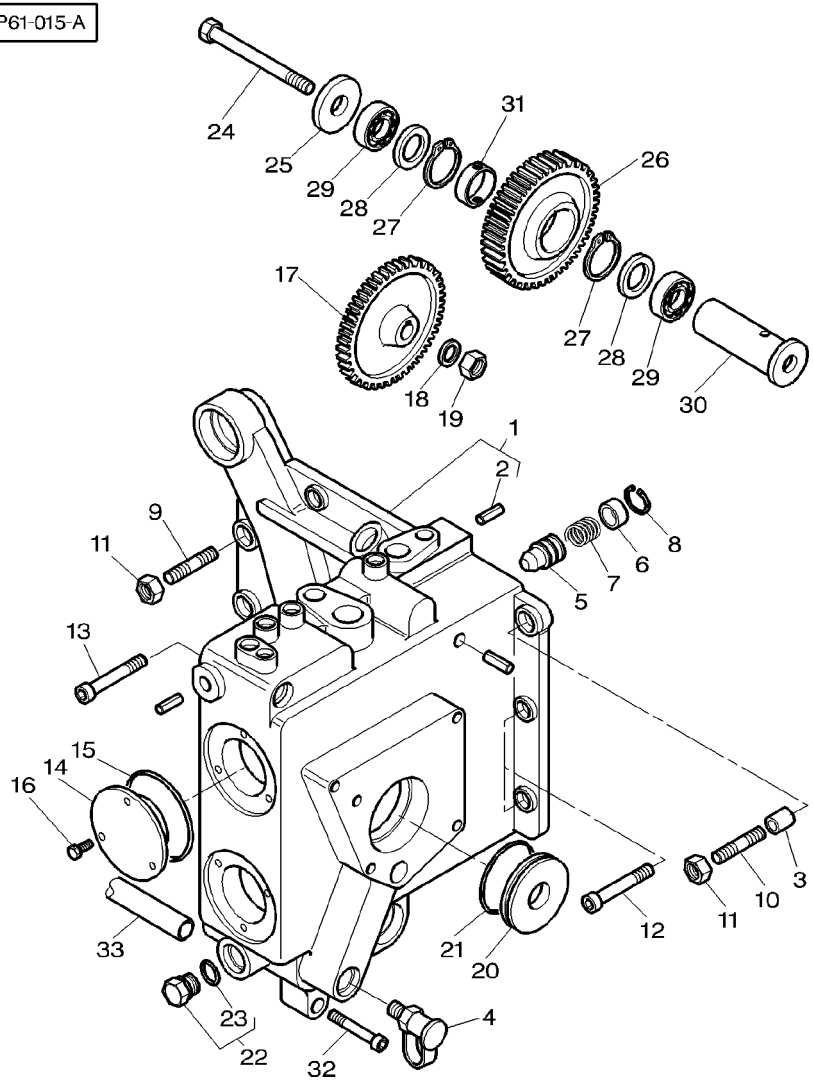

1	3716732M11			**1**	COVER	COUVERCLE COPERCHIO	DECKEL CUBIERTA
2	3712249M1	1		**3**	PLUG	BOUCHON TAPPO	VERSCHL.STOPFEN TAPON
3	3000705X1	∅ 16X18		**2**	PIN	GOUPILLE PERNO	BOLZEN PASADOR
4	***3384387M1***			**1**	PRESSURE INTAKE	PRISE PRESSION PRESA PRESSIONE	ANSAUGDRUCK ENTRADA PRESION
5	3715616M1	22 BARS		**1**	NON RETURN VALVE	CLAPET VALVOLA NO RITOR	RUCKSCHLAGVENTIL VALVULA DE GRANO
6	3715618M1			**1**	CUP	COUPELLE SCODELLINO	LAUFRING CUBETA
7	3715619M1			**1**	SPRING	RESSORT MOLLA	FEDER MUELLE
8	1441785X1			**1**	CLIP	CLIP FERMAGLIO	SCHELLE CRAPA RETEN
9	3019897X1	M12X32		**2**	STUD	GOUJON PRIGIONIERO	STEHBOLZEN ESPARRAGO
10	1440029X1	M12X38		**2**	STUD	GOUJON PRIGIONIERO	STEHBOLZEN ESPARRAGO
11	3009695X1			**4**	NUT METRIC	ECROU METRIQUE DADO METRICO	MUTTER METRISCH TUERCA METRICO
12	1440356X1	M12X30		**3**	SCREW METRIC	VIS METRIQUE VITE METRICA	SCHRAUBE METR TORNILLO METRICO
13	3009301X1	M12X80		**1**	SCREW METRIC	VIS METRIQUE VITE METRICA	SCHRAUBE METR TORNILLO METRICO
14	3716746M1			**2**	COVER	COUVERCLE COPERCHIO	DECKEL CUBIERTA
15	3019920X1			**2**	O RING	JOINT TORIQUE ANELLO OR	O-RING JUNTA TORICA
16	339560X1	M6X16		**6**	SCREW METRIC	VIS METRIQUE VITE METRICA	SCHRAUBE METR TORNILLO METRICO
17	3791889M1	77		**1**	PINION	PIGNON PIGNONE	RITZEL PINON
18	11298X			**1**	WASHER	RONDELLE RONDELLA	UNTERLEGSCHEIBE ARANDELA
19	355647X1	M12		**1**	NUT UNF	ECROU UNF DADO UNF	MUTTER UNF TUERCA UNF
20	3716747M1			**1**	COVER	COUVERCLE COPERCHIO	DECKEL CUBIERTA
21	3580247M1			**1**	O RING	JOINT TORIQUE ANELLO OR	O-RING JUNTA TORICA
22	3019645X91	M22		**1**	PLUG	BOUCHON TAPPO	VERSCHL.STOPFEN TAPON
23	3019398X1	22		**1**	O RING	JOINT TORIQUE ANELLO OR	O-RING JUNTA TORICA
24	3010448X1	M12X140		**1**	SCREW	VIS VITE	SCHRAUBE TORNILLO
25	3618971M2			**1**	WASHER	RONDELLE RONDELLA	UNTERLEGSCHEIBE ARANDELA
26	3716735M1	80		**1**	PINION	PIGNON PIGNONE	RITZEL PINON

Load Sensing	Cover Rh	70-110	With Pump 60cc
Load Sensing	Couvercle Droit		Avec Pompe 60cc
Load Sensing	Rechtsdeckel		Mit Pumpe 60cc
Load Sensing	Tapa Destro		Con Pompa 60cc
Load Sensing	Coperchio Derecho		Con Bomba 60cc

1-ZP61-015-A

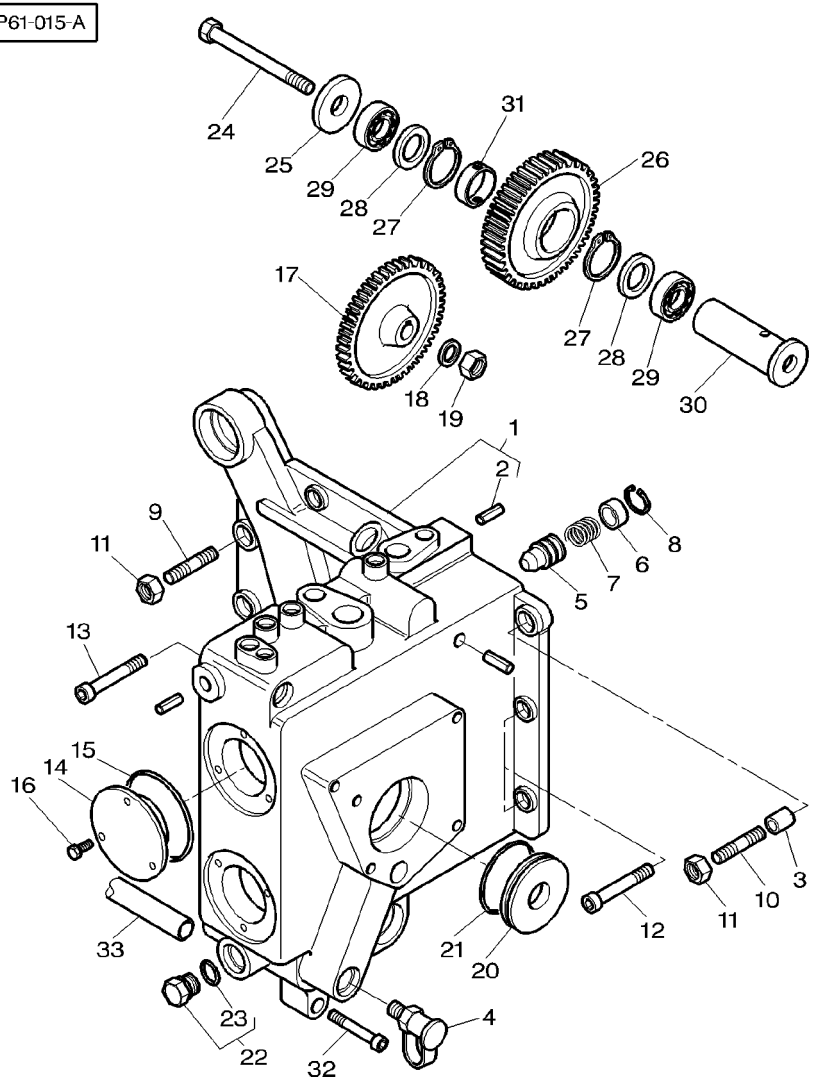

27	1440480X1		2	CIRCLIP	SEGMENT D ARRET ANELLO D'ARRESTO	SICHERUNGSRING CIRCULITO
28	3716741M1	⧗ 0,1MM	X	CHOCK	CALE PASSACAVO	UNTERLEG-KEIL CALZA
28	3716742M1	⧗ 0,2MM	X	CHOCK	CALE PASSACAVO	UNTERLEG-KEIL CALZA
28	3716743M1	⧗ 0,5MM	X	CHOCK	CALE PASSACAVO	UNTERLEG-KEIL CALZA
29	339481X1		2	BEARING TAPER	ROULEMNT CONIQUE CUSCINETTO CONIC	KEGELLAGER RODAMIENTO CONI
30	3716738M1		1	CLEVIS PIN	AXE PERNO D'ATTACCO	SPLINTBOLZEN BULON CILINDRICO
31	3716739M1		1	SPACER	ENTRETOISE DISTANZIALE	ABSTANDSTUECK PIEZA DISTANCIA
32	1440352X1	M10X60	2	BOLT	BOULON BULLONE	MASCH.SCHRAUBE PERNO
33	3791844M1		1	DRAGLINK	TIRANT MAGLIA PER DRAGA	SCHUBSTANGE ENGANCHE DE TIRO

Load Sensing	Cover Rh
Load Sensing	Couvercle Droit
Load Sensing	Rechtsdeckel
Load Sensing	Tapa Destro
Load Sensing	Coperchio Derecho

70-115

With Pump 60cc / Without Trailor Braking
Avec Pompe 60cc / Sans Freinage De Remorque
Mit Pumpe 60cc / Ohne Anhaengerbremsung
Con Pompa 60cc / Senza Frenatura Di Rimorchio
Con Bomba 60cc / Sin Frenado De Remorque

1-ZP61-018-B

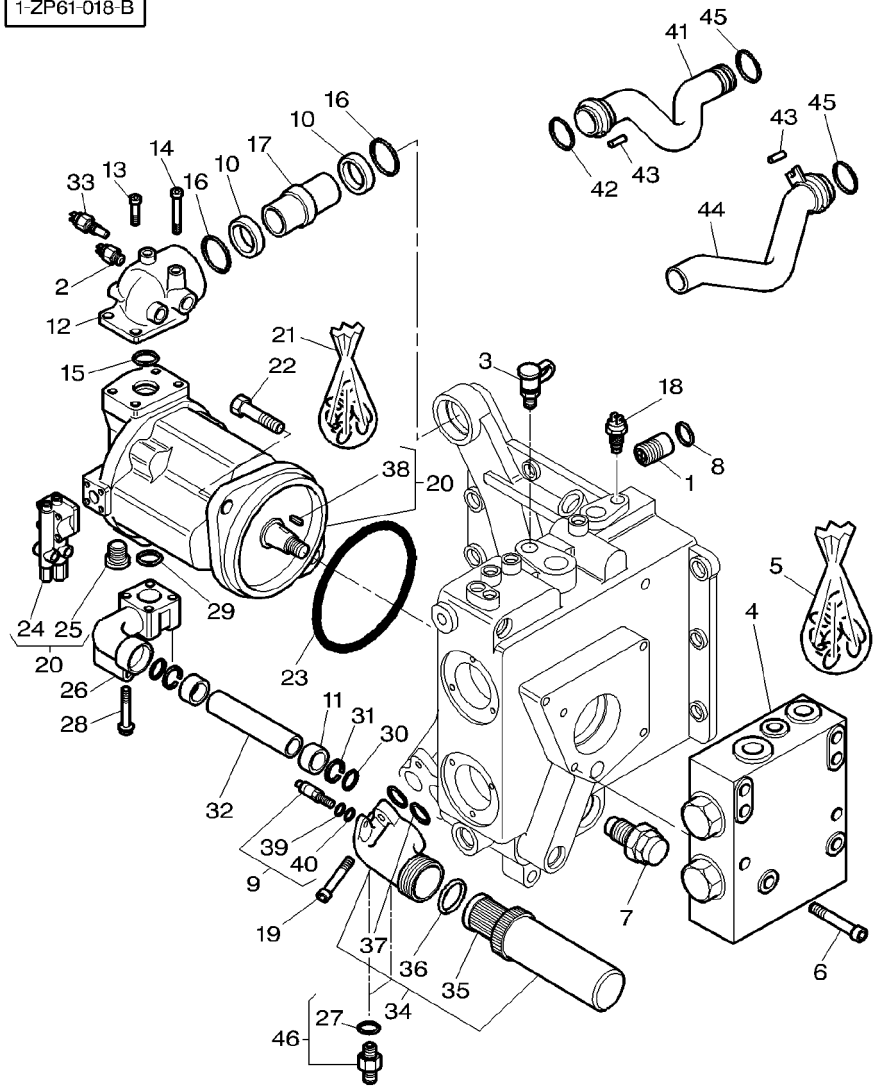

1	3792040M91	5 BARS	**1**	NON RETURN VALVE	CLAPET VALVOLA NO RITOR	RUCKSCHLAGVENTIL VALVULA DE GRANO
2	***3712668M2***	[C]	**1**	SWITCH,INDIRECT	CONTACTEUR INTERRUTTORE IND	KONTAKTSCHALTER CONTACTOR
3	***3384387M1***		**1**	PRESSURE INTAKE	PRISE PRESSION PRESA PRESSIONE	ANSAUGDRUCK ENTRADA PRESION
4	3716355M1		**1**	SAFETY VALVE	BLOC DE SECURITE VALVOLA SICUREZZ	SICHERHEITVENTIL VALVULA SEGURIDA
5	3790027M11		**1**	KIT, JOINT	JEU JOINTS KIT GIUNTO	DICHTUNGSSATZ JUEGO JUNTAS
6	1441946X1	M8X75	**4**	SCREW	VIS VITE	SCHRAUBE TORNILLO
7	3716357M1		**1**	RESTRICTOR	LIMITEUR LIMITATORE	SPARDUESE LIMITADOR
8	359300X1		**1**	O RING	JOINT TORIQUE ANELLO OR	O-RING JUNTA TORICA
9	***3618663M3***		**1**	INDICATOR	INDICATEUR INDICATORE	ANZEIGER INDICADOR
10	3716748M1		**2**	GASKET	JOINT GUARNIZIONE	DICHTSCHEIBE EMPAQUETADURA.
11	3790863M1		**2**	GASKET	JOINT GUARNIZIONE	DICHTSCHEIBE EMPAQUETADURA.
12	3716737M1	➡	J102006	**1**	MANIFOLD	COLLECTEUR COLLETTORE	KRUEMMER MULTIPLE
12	3716737M2	➡ J102007	**1**	MANIFOLD	COLLECTEUR COLLETTORE	KRUEMMER MULTIPLE
13	3009299X1	M12X25	**2**	SCREW METRIC	VIS METRIQUE VITE METRICA	SCHRAUBE METR TORNILLO METRICO
14	3009300X1	M12X70	**2**	SCREW	VIS VITE	SCHRAUBE TORNILLO
15	835130M1		**1**	O RING	JOINT TORIQUE ANELLO OR	O-RING JUNTA TORICA
16	370087X1		**2**	O RING	JOINT TORIQUE ANELLO OR	O-RING JUNTA TORICA
17	3716744M1		**1**	TUBE	TUBE TUBO	ROHR TUBO
18	***3381387M4***		**1**	LOW PR.OIL TRMTR	TR HUILE BASSEPR SENSORE PRESS.	DRUCKSCHNIEDERDR TRANS.ACEITE BP
19	3000258X1	[A] M10X40	**2**	SCREW METRIC	VIS METRIQUE VITE METRICA	SCHRAUBE METR TORNILLO METRICO
19	1440351X1	[B] M10X35	**2**	SCREW METRIC	VIS METRIQUE VITE METRICA	SCHRAUBE METR TORNILLO METRICO
20	3790900M1	60CM3/RPM	**1**	PUMP	POMPE POMPA	PUMPE BOMBA
21	3903018M91		**1**	KIT, JOINT	JEU JOINTS KIT GIUNTO	DICHTUNGSSATZ JUEGO JUNTAS
22	390419X1	M16X40	**2**	BOLT METRIC	BOULON METRIQUE BULLONE METRICO	MASCH.SCHRB MET PERNO METRICO
23	70923591		**1**	O RING	JOINT TORIQUE ANELLO OR	O-RING JUNTA TORICA
24	3903022M1	20	**1**	ADJUSTER	REGLEUR CILINDRO SOLLEV.	EINSTELLVORR AJUSTADOR

Load Sensing	Cover Rh	70-115	With Pump 60cc / Without Trailor Braking
Load Sensing	Couvercle Droit		Avec Pompe 60cc / Sans Freinage De Remorque
Load Sensing	Rechtsdeckel		Mit Pumpe 60cc / Ohne Anhaengerbremsung
Load Sensing	Tapa Destro		Con Pompa 60cc / Senza Frenatura Di Rimorchio
Load Sensing	Coperchio Derecho		Con Bomba 60cc / Sin Frenado De Remorque

1-ZP61-018-B

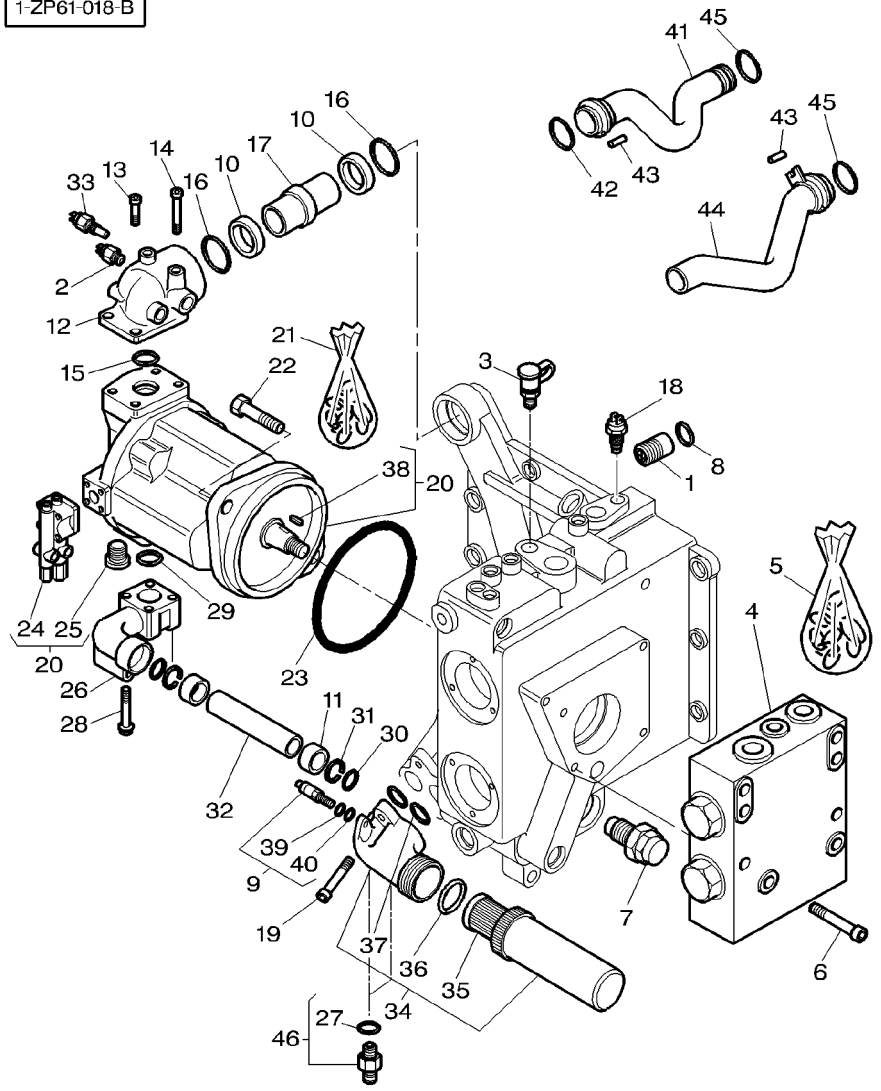

25	3903019M1	20		1	PLUG	BOUCHON TAPPO	VERSCHL.STOPFEN TAPON
26	3791912M1			1	MANIFOLD	COLLECTEUR COLLETTORE	KRUEMMER MULTIPLE
27	3019398X1	46		1	O RING	JOINT TORIQUE ANELLO OR	O-RING JUNTA TORICA
28	3811722M1		M10X70	4	BOLT	BOULON BULLONE	MASCH.SCHRAUBE PERNO
29	359306X1			1	O RING	JOINT TORIQUE ANELLO OR	O-RING JUNTA TORICA
30	3010827X1			2	O RING	JOINT TORIQUE ANELLO OR	O-RING JUNTA TORICA
31	3010709X1			2	BUSH	BAGUE BOCCOLA	BUCHSE CASQUILLO
32	3716745M1			1	TUBE	TUBE TUBO	ROHR TUBO
33	***3790121M1***		➡| J102006	1	THERMOCONTACT	THERMOCONTACT TERMASTO CONTAT	THERMOKONTAKT TERMOSTA CONTACT
34	3791109M1		[A]	1	FILTER	FILTRE FILTRO	FILTER FILTRO
34	3792618M1		[B]	1	FILTER	FILTRE FILTRO	FILTER FILTRO
35	***3618662M1***	34		1	FILTER INSERT	ELEMENT FILTRANT ELEMENTO FILTRAN	FILTEREINSATZ SUPLEMENT FILTRO
36	842332M1	34		1	GASKET	JOINT GUARNIZIONE	DICHTSCHEIBE EMPAQUETADURA.
37	831196M1	34		2	O RING	JOINT TORIQUE ANELLO OR	O-RING JUNTA TORICA
38	3903021M1	20		1	KEY	CLAVETTE CHIAVETTA	PASSKEIL CLAVE
39	831497M1	9	∅ 16,4X2,2	1	O RING	JOINT TORIQUE ANELLO OR	O-RING JUNTA TORICA
40	70923841	9	∅ 12,4X1,8	1	O RING	JOINT TORIQUE ANELLO OR	O-RING JUNTA TORICA
41	3716376M92			1	TUBE	TUBE TUBO	ROHR TUBO
42	3793346M1			1	SEAL	JOINT ETANCHEITE PARAOLIO	DICHTRING RETEN
43	1441722X1		∅ 3X16MM	2	PIN	GOUPILLE PERNO	BOLZEN PASADOR
44	3716377M91			1	TUBE	TUBE TUBO	ROHR TUBO
45	364777X1			2	O RING	JOINT TORIQUE ANELLO OR	O-RING JUNTA TORICA
46	3019389X91		[B]	2	UNION	RACCORD RACCORDO	VERSCHRAUBUNG RACOR

[A] WITH FULL POWERSHIFT
AVEC FULL POWERSHIFT
MIT FULL POWERSHIFT
CON FULL POWERSHIFT
CON FULL POWERSHIFT

Load Sensing Load Sensing Load Sensing Load Sensing Load Sensing	Cover Rh Couvercle Droit Rechtsdeckel Tapa Destro Coperchio Derecho	70-115	With Pump 60cc / Without Trailor Braking Avec Pompe 60cc / Sans Freinage De Remorque Mit Pumpe 60cc / Ohne Anhaengerbremsung Con Pompa 60cc / Senza Frenatura Di Rimorchio Con Bomba 60cc / Sin Frenado De Remorque

1-ZP61-018-B

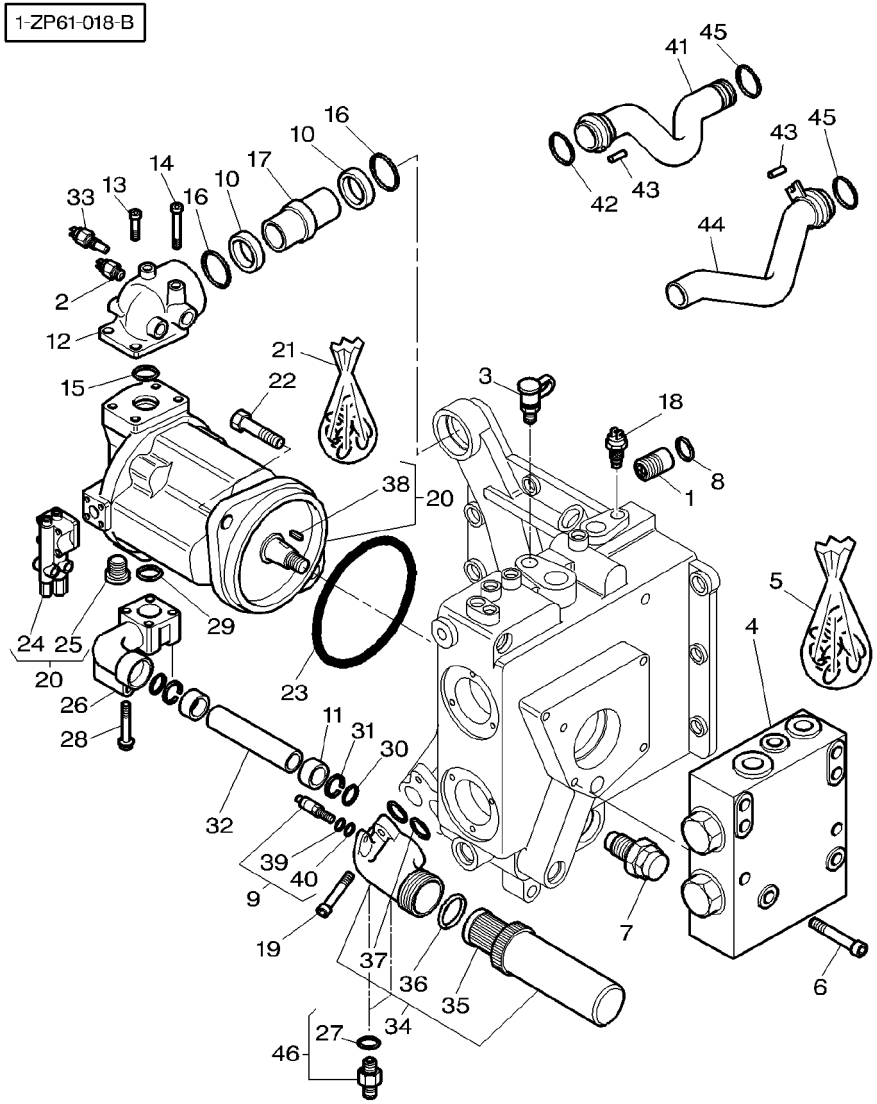

[B] WITH DYNASHIFT
AVEC DYNASHIFT
MIT DYNASHIFT
CON DYNASHIFT
CON DYNASHIFT

[C] GREEN
VERT
GRUEN
VERDE
VERDE

Load Sensing	Cover Rh	70-120
Load Sensing	Couvercle Droit	
Load Sensing	Rechtsdeckel	
Load Sensing	Tapa Destro	
Load Sensing	Coperchio Derecho	

With Pump 60cc / With Trailor Braking
Avec Pompe 60cc / Avec Freinage De Remorque
Mit Pumpe 60cc / Mit Anhaengerbremsung
Con Pompa 60cc / Con Frenatura Di Rimorchio
Con Bomba 60cc / Con Frenado De Remorque

1-ZP61-019-B

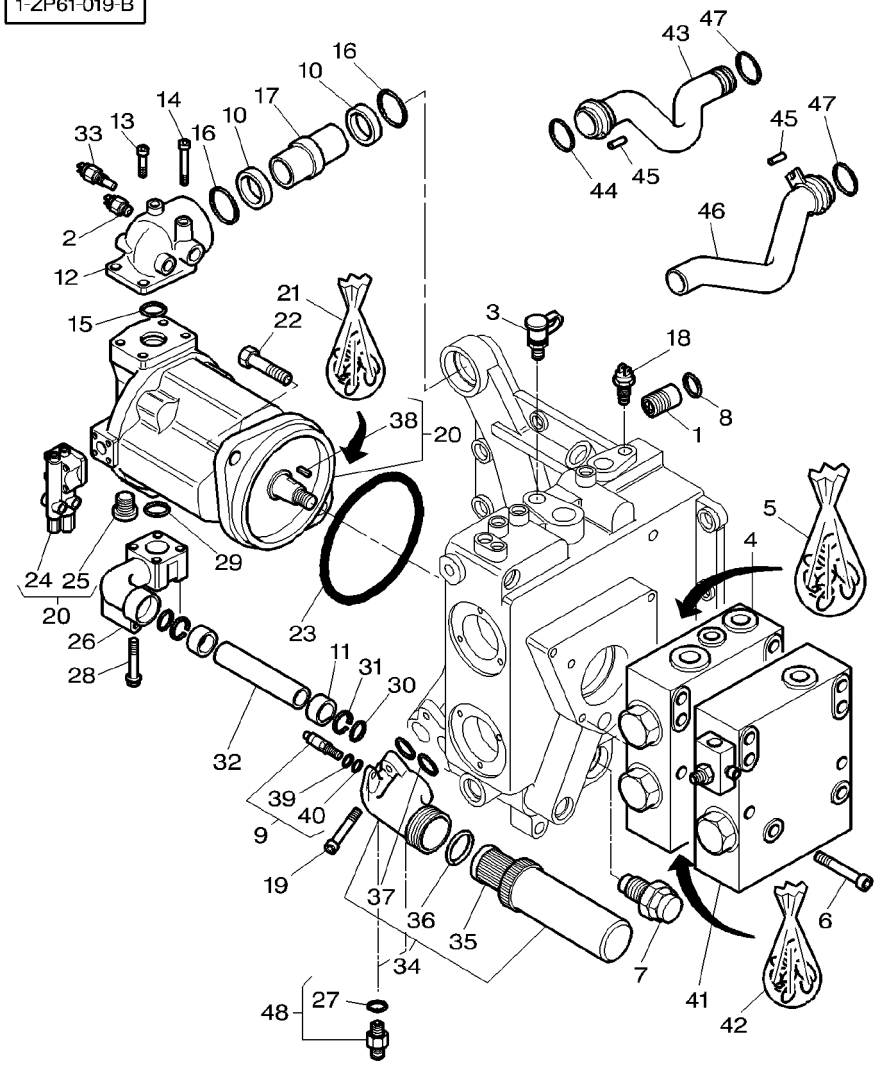

1	3792040M91	5 BARS	1	NON RETURN VALVE	CLAPET VALVOLA NO RITOR	RUCKSCHLAGVENTIL VALVULA DE GRANO
2	***3712668M2***	[E]	1	SWITCH,INDIRECT	CONTACTEUR INTERRUTTORE IND	KONTAKTSCHALTER CONTACTOR
3	***3384387M1***		1	PRESSURE INTAKE	PRISE PRESSION PRESA PRESSIONE	ANSAUGDRUCK ENTRADA PRESION
4	3790025M1	[B]	1	SAFETY VALVE	BLOC DE SECURITE VALVOLA SICUREZZ	SICHERHEITVENTIL VALVULA SEGURIDA
5	3790027M11		1	KIT, JOINT	JEU JOINTS KIT GIUNTO	DICHTUNGSSATZ JUEGO JUNTAS
6	3015017X1	M8X135	4	SCREW	VIS VITE	SCHRAUBE TORNILLO
7	3716357M1		1	RESTRICTOR	LIMITEUR LIMITATORE	SPARDUESE LIMITADOR
8	359300X1		1	O RING	JOINT TORIQUE ANELLO OR	O-RING JUNTA TORICA
9	***3618663M3***		1	INDICATOR	INDICATEUR INDICATORE	ANZEIGER INDICADOR
10	3716748M1		2	GASKET	JOINT GUARNIZIONE	DICHTSCHEIBE EMPAQUETADURA.
11	3790863M1		2	GASKET	JOINT GUARNIZIONE	DICHTSCHEIBE EMPAQUETADURA.
12	3716737M1	➡| J102006	1	MANIFOLD	COLLECTEUR COLLETTORE	KRUEMMER MULTIPLE
12	3716737M2	➡	J102007	1	MANIFOLD	COLLECTEUR COLLETTORE	KRUEMMER MULTIPLE
13	3009299X1	M12X25	2	SCREW METRIC	VIS METRIQUE VITE METRICA	SCHRAUBE METR TORNILLO METRICO
14	3009300X1	M12X70	2	SCREW	VIS VITE	SCHRAUBE TORNILLO
15	835130M1		1	O RING	JOINT TORIQUE ANELLO OR	O-RING JUNTA TORICA
16	370087X1		2	O RING	JOINT TORIQUE ANELLO OR	O-RING JUNTA TORICA
17	3716744M1		1	TUBE	TUBE TUBO	ROHR TUBO
18	***3381387M4***		1	LOW PR.OIL TRMTR	TR HUILE BASSEPR SENSORE PRESS.	DRUCKSCHNIEDERDR TRANS.ACEITE BP
19	3000258X1	[A] M10X40	2	SCREW METRIC	VIS METRIQUE VITE METRICA	SCHRAUBE METR TORNILLO METRICO
19	1440351X1	[D] M10X35	2	SCREW METRIC	VIS METRIQUE VITE METRICA	SCHRAUBE METR TORNILLO METRICO
20	3790900M1	60CM3/RPM	1	PUMP	POMPE POMPA	PUMPE BOMBA
21	3903018M91		1	KIT, JOINT	JEU JOINTS KIT GIUNTO	DICHTUNGSSATZ JUEGO JUNTAS
22	390419X1	M16X40	2	BOLT METRIC	BOULON METRIQUE BULLONE METRICO	MASCH.SCHRB MET PERNO METRICO
23	70923591		1	O RING	JOINT TORIQUE ANELLO OR	O-RING JUNTA TORICA
24	3903022M1	20	1	ADJUSTER	REGLEUR CILINDRO SOLLEV.	EINSTELLVORR AJUSTADOR

Load Sensing	Cover Rh	70-120	With Pump 60cc / With Trailor Braking
Load Sensing	Couvercle Droit		Avec Pompe 60cc / Avec Freinage De Remorque
Load Sensing	Rechtsdeckel		Mit Pumpe 60cc / Mit Anhaengerbremsung
Load Sensing	Tapa Destro		Con Pompa 60cc / Con Frenatura Di Rimorchio
Load Sensing	Coperchio Derecho		Con Bomba 60cc / Con Frenado De Remorque

1-ZP61-019-B

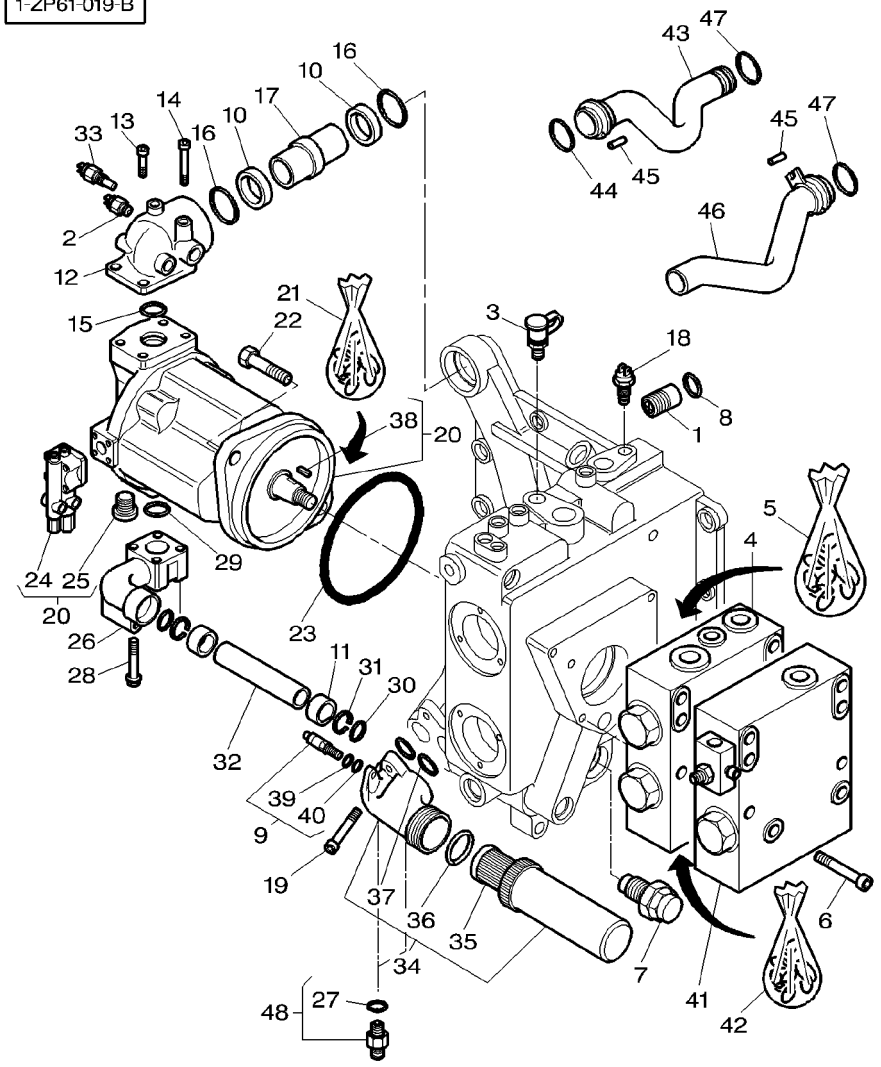

25	3903019M1	20	**1**	PLUG	BOUCHON TAPPO	VERSCHL.STOPFEN TAPON
26	3791912M1		**1**	MANIFOLD	COLLECTEUR COLLETTORE	KRUEMMER MULTIPLE
27	3019398X1	48	**1**	O RING	JOINT TORIQUE ANELLO OR	O-RING JUNTA TORICA
28	3811722M1	M10X70	**4**	BOLT	BOULON BULLONE	MASCH.SCHRAUBE PERNO
29	359306X1		**1**	O RING	JOINT TORIQUE ANELLO OR	O-RING JUNTA TORICA
30	3010827X1		**2**	O RING	JOINT TORIQUE ANELLO OR	O-RING JUNTA TORICA
31	3010709X1		**2**	BUSH	BAGUE BOCCOLA	BUCHSE CASQUILLO
32	3716745M1		**1**	TUBE	TUBE TUBO	ROHR TUBO
33	***3790121M1***	➡| J102006	**1**	THERMOCONTACT	THERMOCONTACT TERMASTO CONTAT	THERMOKONTAKT TERMOSTA CONTACT
34	3791109M1	[A]	**1**	FILTER	FILTRE FILTRO	FILTER FILTRO
34	3792618M1	[D]	**1**	FILTER	FILTRE FILTRO	FILTER FILTRO
35	***3618662M1***	34	**1**	FILTER INSERT	ELEMENT FILTRANT ELEMENTO FILTRAN	FILTEREINSATZ SUPLEMENT FILTRO
36	842332M1	34	**1**	GASKET	JOINT GUARNIZIONE	DICHTSCHEIBE EMPAQUETADURA.
37	831196M1	34	**2**	O RING	JOINT TORIQUE ANELLO OR	O-RING JUNTA TORICA
38	3903021M1	20	**1**	KEY	CLAVETTE CHIAVETTA	PASSKEIL CLAVE
39	831497M1	9 ∅ 16,4X2,2	**1**	O RING	JOINT TORIQUE ANELLO OR	O-RING JUNTA TORICA
40	70923841	9 ∅ 12,4X1,8	**1**	O RING	JOINT TORIQUE ANELLO OR	O-RING JUNTA TORICA
41	3790036M1	[C]	**1**	SAFETY VALVE	BLOC DE SECURITE VALVOLA SICUREZZ	SICHERHEITVENTIL VALVULA SEGURIDA
42	3902094M91		**1**	KIT, JOINT	JEU JOINTS KIT GIUNTO	DICHTUNGSSATZ JUEGO JUNTAS
43	3716376M92		**1**	TUBE	TUBE TUBO	ROHR TUBO
44	3793346M1		**1**	SEAL	JOINT ETANCHEITE PARAOLIO	DICHTRING RETEN
45	1441722X1	∅ 3X16MM	**2**	PIN	GOUPILLE PERNO	BOLZEN PASADOR
46	3716377M91		**1**	TUBE	TUBE TUBO	ROHR TUBO
47	364777X1		**2**	O RING	JOINT TORIQUE ANELLO OR	O-RING JUNTA TORICA
48	3019389X91	[D]	**2**	UNION	RACCORD RACCORDO	VERSCHRAUBUNG RACOR

Load Sensing Load Sensing Load Sensing Load Sensing Load Sensing	Cover Rh Couvercle Droit Rechtsdeckel Tapa Destro Coperchio Derecho	70-120	With Pump 60cc / With Trailor Braking Avec Pompe 60cc / Avec Freinage De Remorque Mit Pumpe 60cc / Mit Anhaengerbremsung Con Pompa 60cc / Con Frenatura Di Rimorchio Con Bomba 60cc / Con Frenado De Remorque

1-ZP61-019-B

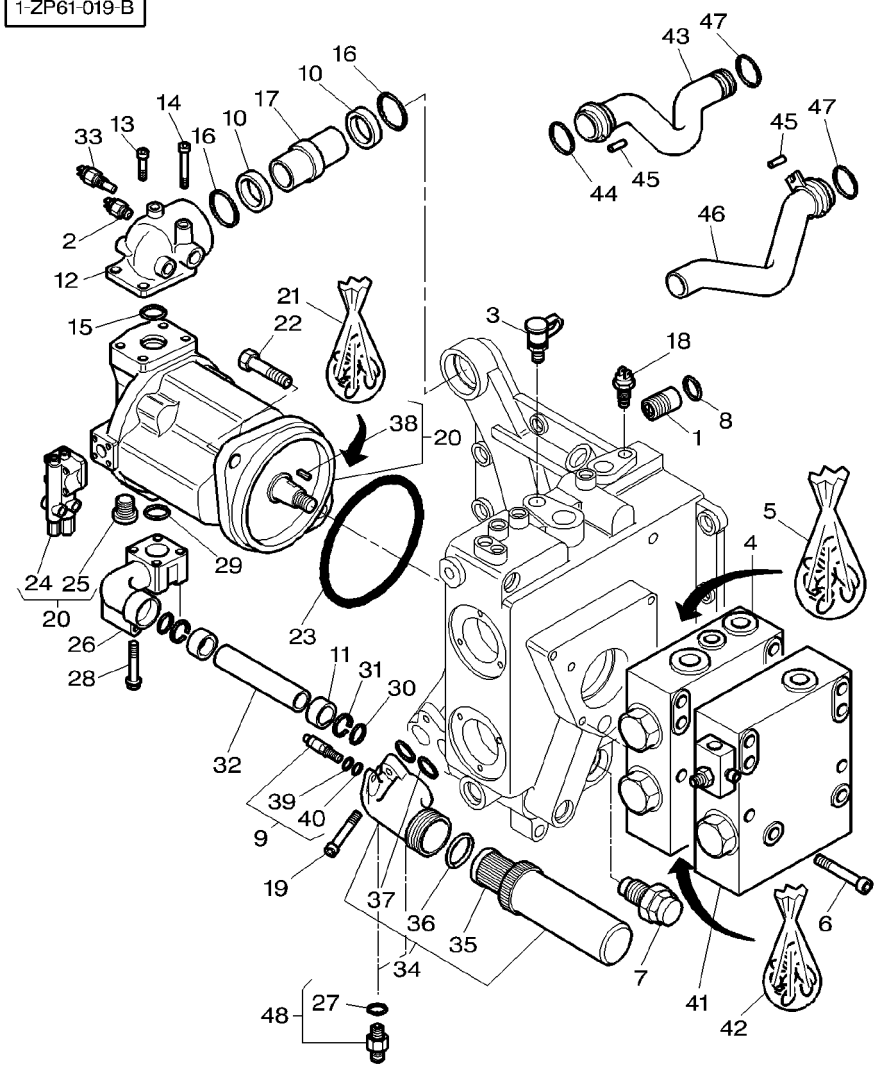

[A] WITH FULL POWERSHIFT
AVEC FULL POWERSHIFT
MIT FULL POWERSHIFT
CON FULL POWERSHIFT
CON FULL POWERSHIFT

[B] STEERING
DIRECTION
LENKUNG
DIRECCION
STERZO

[C] BRAKING
FREINAGE
BREMSUNG
FRENADO
FRENATURA

[D] WITH DYNASHIFT
AVEC DYNASHIFT
MIT DYNASHIFT
CON DYNASHIFT
CON DYNASHIFT

[E] GREEN
VERT
GRUEN
VERDE
VERDE

Load Sensing	Cover Rh
Load Sensing	Couvercle Droit
Load Sensing	Rechtsdeckel
Load Sensing	Tapa Destro
Load Sensing	Coperchio Derecho

70-125

With Pump 60cc / Hydr. Lines / With Trailor Braki Ng
Avec Pompe 60cc / Tuyauteries / Avec Freinage De R Emorque
Mit Pumpe 60cc / Leitungen / Mit Anhaengerbremsung
Con Pompa 60cc / Tubazioni / Con Frenatura Di Rimo Rchio
Con Bomba 60cc / Circuito / Con Frenado De Remorq Ue

1-ZP61-016-D

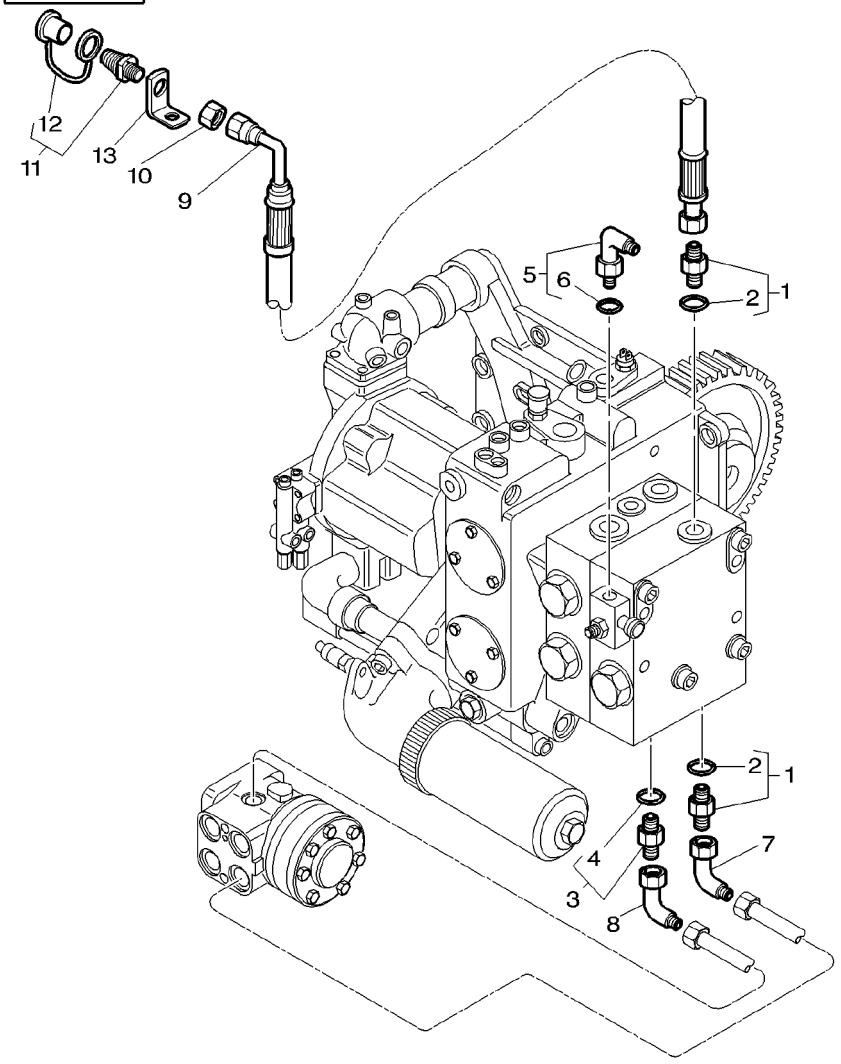

1	3019658X91		∅ M22−3/4	**2**	UNION	RACCORD RACCORDO	VERSCHRAUBUNG RACOR
2	3019398X1	1		**1**	O RING	JOINT TORIQUE ANELLO OR	O−RING JUNTA TORICA
3	3019379X91		∅ M14X9/16	**1**	UNION	RACCORD RACCORDO	VERSCHRAUBUNG RACOR
4	3019395X1	3		**1**	O RING	JOINT TORIQUE ANELLO OR	O−RING JUNTA TORICA
5	3019694X91		∅ M14X1/2	**1**	UNION	RACCORD RACCORDO	VERSCHRAUBUNG RACOR
6	3019395X1	5		**1**	O RING	JOINT TORIQUE ANELLO OR	O−RING JUNTA TORICA
7	365233X1			**1**	ELBOW	COUDE GOMITO	WINKELSTUECK CODO
8	364603X1			**1**	ELBOW	COUDE GOMITO	WINKELSTUECK CODO
9	3792041M1			**1**	HYDR HOSE	FLEXIBLE TUBOFLEX IDRAUL	HYDR SCHLAUCH TUBO HIDRAULICO
10	1442336X1			**1**	NUT	ECROU DADO	MUTTER TUERCA
11	***3581307M2***			**1**	PRESSURE VALVE	VALVE VALVOLA PRESSION	DRUCKVENTIL VALVULA PRESION
12	3616259M1	11		**1**	PLUG	BOUCHON TAPPO	VERSCHL.STOPFEN TAPON
13	3792736M1			**1**	SUPPORT	SUPPORT SUPPORTO	LAGERUNG DISPOS.DE SOSTEN

Load Sensing	Cover Rh	70-130	With Pump 60cc / Hydr. Lines / With Or Without Tr Ailor Braking
Load Sensing	Couvercle Droit		Avec Pompe 60cc / Tuyauteries / Avec Ou Sans Frein Age De Remorque
Load Sensing	Rechtsdeckel		Mit Pumpe 60cc / Leitungen / Mit Oder Ohne Anhaeng Erbremsung
Load Sensing	Tapa Destro		Con Pompa 60cc / Tubazioni / Con O Senza Frenatura Di Rimorchio
Load Sensing	Coperchio Derecho		Con Bomba 60cc / Circuito / Con I Sin Frenado De R Emorque

1-ZP61-020-A

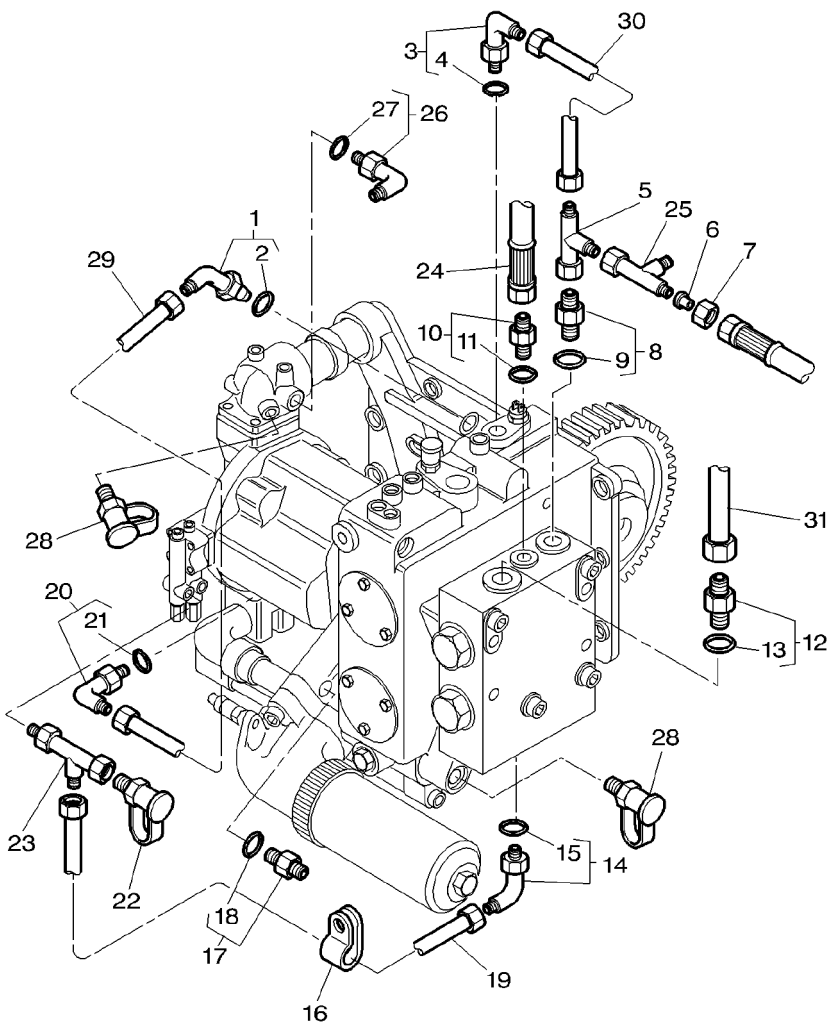

1	3019418X91		∅ M22X7/8	1	UNION	RACCORD RACCORDO
2	3019398X1	1		1	O RING	JOINT TORIQUE ANELLO OR
3	**3019414X91**		∅ M16X3/4	1	UNION	RACCORD RACCORDO
4	3019396X1	3		1	O RING	JOINT TORIQUE ANELLO OR
5	364735X1			1	UNION	RACCORD RACCORDO
6	356627X1		∅ 3/4X9/16	1	ADAPTOR	ADAPTATEUR ADATTATORE
7	195960M1		∅ 3/4	1	NUT	ECROU DADO
8	3019658X91		∅ M22-3/4	1	UNION	RACCORD RACCORDO
9	3019398X1	8		1	O RING	JOINT TORIQUE ANELLO OR
10	3019379X91		∅ M14X9/16	1	UNION	RACCORD RACCORDO
11	3019395X1	10		1	O RING	JOINT TORIQUE ANELLO OR
12	3019391X91		∅ M33X1"5/16	1	UNION	RACCORD RACCORDO
13	3019399X1	12		1	O RING	JOINT TORIQUE ANELLO OR
14	3019694X91		∅ M14X1/2	1	UNION	RACCORD RACCORDO
15	3019395X1	14		1	O RING	JOINT TORIQUE ANELLO OR
16	3581132M1			1	CLAMP	COLLIER FASCETTA
17	3019381X91		∅ M16X3/4	1	UNION	RACCORD RACCORDO
18	3019399X1	17		1	O RING	JOINT TORIQUE ANELLO OR
19	3791710M1			1	TUBE	TUBE TUBO
20	835007M91		∅ 7/8X7/8	1	ELBOW	COUDE GOMITO
21	1882958M1	20		1	O RING	JOINT TORIQUE ANELLO OR
22	3712707M1			1	INTAKE	PRISE ASPIRAZIONE
23	3712689M1			1	UNION	RACCORD RACCORDO
24	3792042M1			1	HYDR HOSE	FLEXIBLE TUBOFLEX IDRAUL
25	364735X1		∅ 3/4-16	1	UNION	RACCORD RACCORDO
26	3019416X91		∅ M18X7/8	1	ELBOW	COUDE GOMITO

					VERSCHRAUBUNG RACOR
					O-RING JUNTA TORICA
					VERSCHRAUBUNG RACOR
					O-RING JUNTA TORICA
					VERSCHRAUBUNG RACOR
					REDUZIERNIPPEL ADAPTADOR
					MUTTER TUERCA
					VERSCHRAUBUNG RACOR
					O-RING JUNTA TORICA
					VERSCHRAUBUNG RACOR
					O-RING JUNTA TORICA
					VERSCHRAUBUNG RACOR
					O-RING JUNTA TORICA
					VERSCHRAUBUNG RACOR
					HALTESCHELLE ABRAZADERA
					VERSCHRAUBUNG RACOR
					O-RING JUNTA TORICA
					ROHR TUBO
					WINKELSTUECK CODO
					O-RING JUNTA TORICA
					SAUGROHR ENTRADA
					VERSCHRAUBUNG RACOR
					HYDR SCHLAUCH TUBO HIDRAULICO
					VERSCHRAUBUNG RACOR
					WINKELSTUECK CODO

Load Sensing	Cover Rh	70-130	With Pump 60cc / Hydr. Lines / With Or Without Tr Ailor Braking
Load Sensing	Couvercle Droit		Avec Pompe 60cc / Tuyauteries / Avec Ou Sans Frein Age De Remorque
Load Sensing	Rechtsdeckel		Mit Pumpe 60cc / Leitungen / Mit Oder Ohne Anhaeng Erbremsung
Load Sensing	Tapa Destro		Con Pompa 60cc / Tubazioni / Con O Senza Frenatura Di Rimorchio
Load Sensing	Coperchio Derecho		Con Bomba 60cc / Circuito / Con I Sin Frenado De R Emorque

1-ZP61-020-A

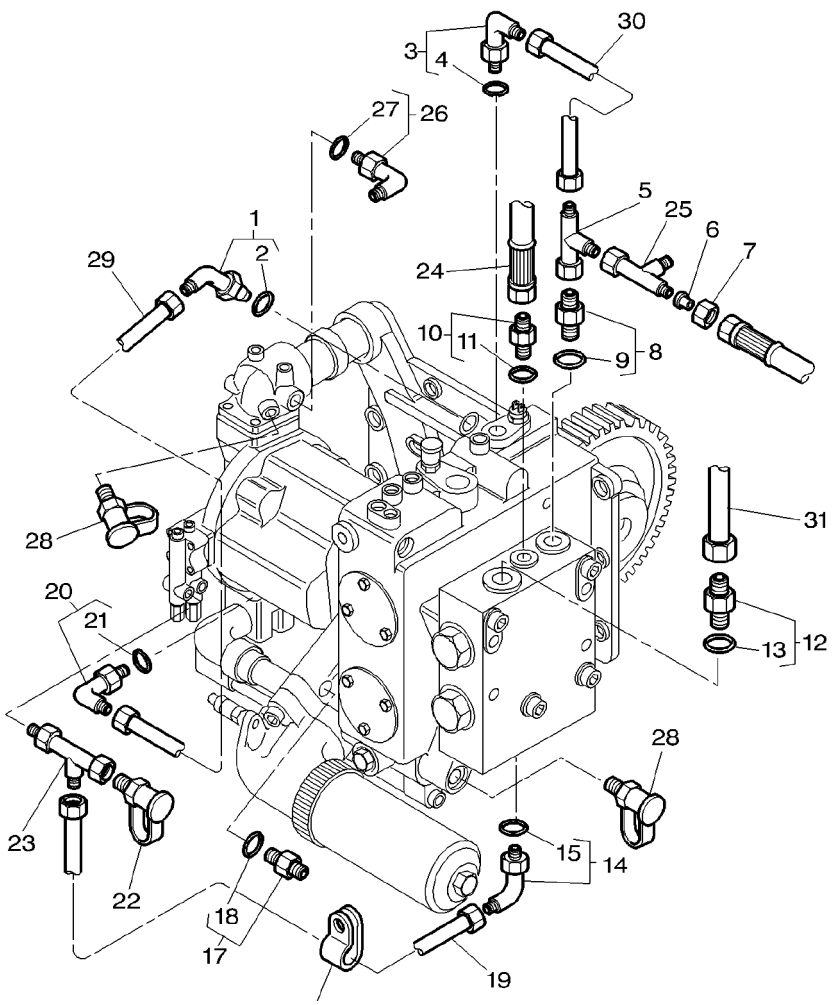

27	3019397X1	26	**1**	O RING	JOINT TORIQUE ANELLO OR	O-RING JUNTA TORICA
28	***3384387M1***		**2**	PRESSURE INTAKE	PRISE PRESSION PRESA PRESSIONE	ANSAUGDRUCK ENTRADA PRESION
29	3792313M1		**1**	TUBE	TUBE TUBO	ROHR TUBO
30	3791711M1		**1**	TUBE	TUBE TUBO	ROHR TUBO
31	3791709M1		**1**	TUBE	TUBE TUBO	ROHR TUBO

Load Sensing	Cover Rh	70-135	With Pump 60cc / Dual Control Distributor Feeding
Load Sensing	Couvercle Droit		Avec Pompe 60cc / Alimentation Distributeur Dual C Ontrol
Load Sensing	Rechtsdeckel		Mit Pumpe 60cc / Verteilerfutterung Dual Control
Load Sensing	Tapa Destro		Con Pompa 60cc / Alimentazione Distributore Dual C Ontrol
Load Sensing	Coperchio Derecho		Con Bomba 60cc / Alimentacion Distribuidore Dual C Ontrol

1-ZP61-022-A

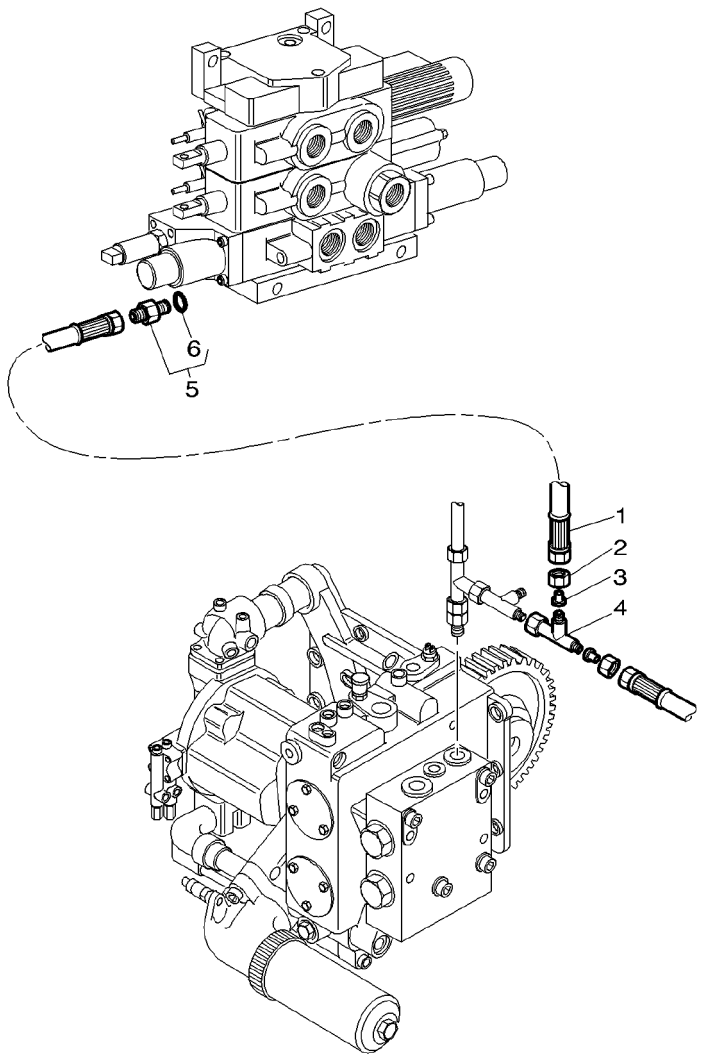

1	3716399M1	◄►	1360MM	1	HYDR HOSE	FLEXIBLE TUBOFLEX IDRAUL
2	338773X1			1	OLIVE	OLIVE OLIVA
3	356627X1			1	ADAPTOR	ADAPTATEUR ADATTATORE
4	364735X1			1	UNION	RACCORD RACCORDO
5	3019660X91			1	UNION	RACCORD RACCORDO
6	3019393X1	5		1	O RING	JOINT TORIQUE ANELLO OR

HYDR SCHLAUCH TUBO HIDRAULICO			
SCHNEIDRING OLIVA			
REDUZIERNIPPEL ADAPTADOR			
VERSCHRAUBUNG RACOR			
VERSCHRAUBUNG RACOR			
O–RING JUNTA TORICA			

Hydraulic Circuit Lube Systeme	**With Full Powershift**	**70-140**
Circuit Hydraulique Lubrification	**Avec Full Powershift**	
Hydraulikleitungen Schmierungs	**Mit Full Powershift**	
Circuito Idraulico Lubrificazione	**Con Full Powershift**	
Circuito Hidraulico Engrase	**Con Full Powershift**	

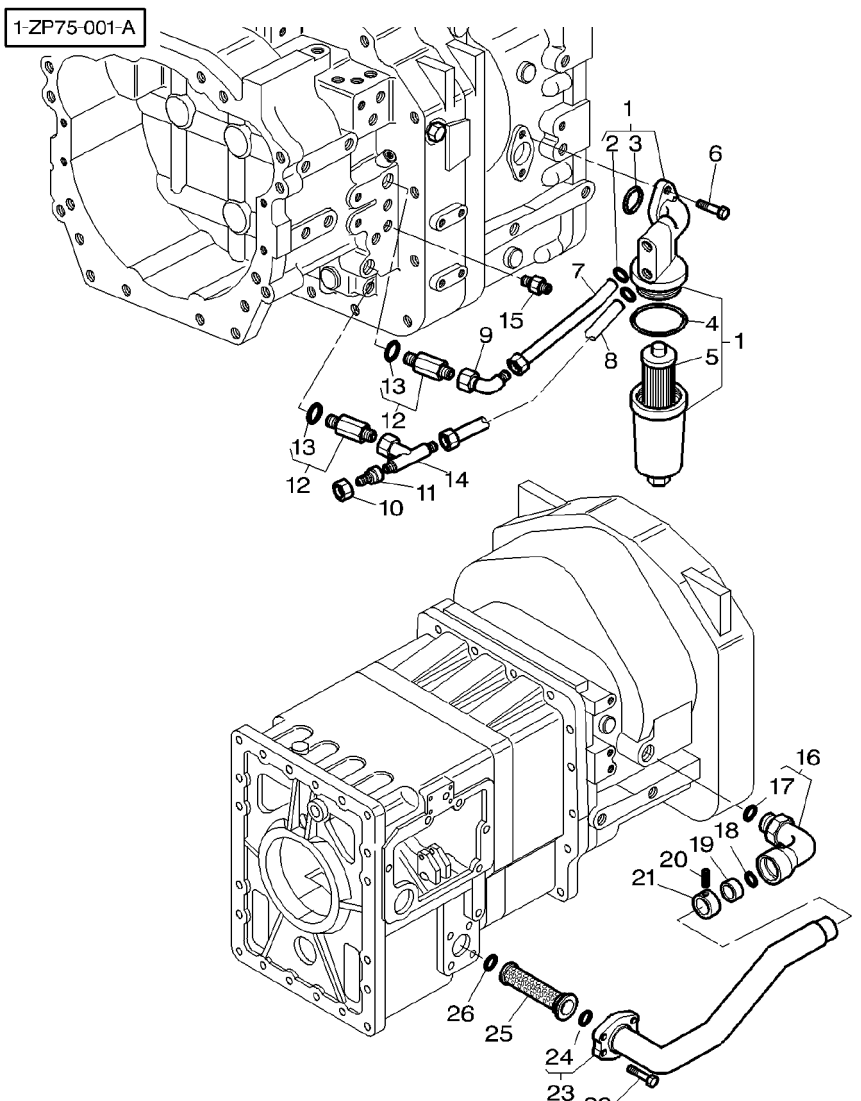

1	3791110M2			**1**	FILTER	FILTRE FILTRO	FILTER FILTRO
2	70924776	1		**2**	O RING	JOINT TORIQUE ANELLO OR	O-RING JUNTA TORICA
3	377353X1	1		**1**	O RING	JOINT TORIQUE ANELLO OR	O-RING JUNTA TORICA
4	842332M1	1		**1**	GASKET	JOINT GUARNIZIONE	DICHTSCHEIBE EMPAQUETADURA.
5	***3618662M1***	1		**1**	FILTER INSERT	ELEMENT FILTRANT ELEMENTO FILTRAN	FILTEREINSATZ SUPLEMENT FILTRO
6	1440356X1	M12x30		**2**	SCREW METRIC	VIS METRIQUE VITE METRICA	SCHRAUBE METR TORNILLO METRICO
7	3791873M2			**1**	TUBE	TUBE TUBO	ROHR TUBO
8	3791874M2			**1**	TUBE	TUBE TUBO	ROHR TUBO
9	367277X1	∅ 1"5/16-12		**1**	ELBOW	COUDE GOMITO	WINKELSTUECK CODO
10	375048X1			**1**	NUT	ECROU DADO	MUTTER TUERCA
11	356633X1			**1**	ADAPTOR	ADAPTATEUR ADATTATORE	REDUZIERNIPPEL ADAPTADOR
12	3791393M91	∅ 1"5/16-12		**2**	UNION	RACCORD RACCORDO	VERSCHRAUBUNG RACOR
13	835026M1	12		**1**	O RING	JOINT TORIQUE ANELLO OR	O-RING JUNTA TORICA
14	373793X1	∅ 1"5/16-12		**1**	TEEPIECE	TE RACCORDO A T	T-STUECK PIEZA EN T
15	3790887M1	∅ 1"5/16 ∅ 1"1/16-18		**1**	UNION	RACCORD RACCORDO	VERSCHRAUBUNG RACOR
16	3716901M1			**1**	BRIDLE	BRIDE BRIGLIA	SPANNBAND BRIDA
17	70921887	16 ⇔ 831504M1		**1**	O RING	JOINT TORIQUE ANELLO OR	O-RING JUNTA TORICA
18	852140M1			**1**	O RING	JOINT TORIQUE ANELLO OR	O-RING JUNTA TORICA
19	3716902M1			**1**	GASKET	JOINT GUARNIZIONE	DICHTSCHEIBE EMPAQUETADURA.
20	3009351X1	M6X8		**1**	SCREW	VIS VITE	SCHRAUBE TORNILLO
21	3716903M1			**1**	BUSH	BAGUE BOCCOLA	BUCHSE CASQUILLO
22	1440356X1	M12X30		**4**	SCREW METRIC	VIS METRIQUE VITE METRICA	SCHRAUBE METR TORNILLO METRICO
23	3716907M92			**1**	TUBE	TUBE TUBO	ROHR TUBO
24	3716358M1	23		**1**	SEAL	JOINT ETANCHEITE PARAOLIO	DICHTRING RETEN
25	***3716334M1***			**1**	STRAINER	CREPINE COLINO	FILTERSIEB COLADOR
26	1006234M1			**1**	O RING	JOINT TORIQUE ANELLO OR	O-RING JUNTA TORICA

Hydraulic Circuit Lube Systeme
Circuit Hydraulique Lubrification
Hydraulikleitungen Schmierungs
Circuito Idraulico Lubrificazione
Circuito Hidraulico Engrase

70-145

With Pump 45cc
Avec Pompe 45cc
Mit Pumpe 45cc
Con Pompa 45cc
Con Bomba 45cc

1-ZP76-002-B

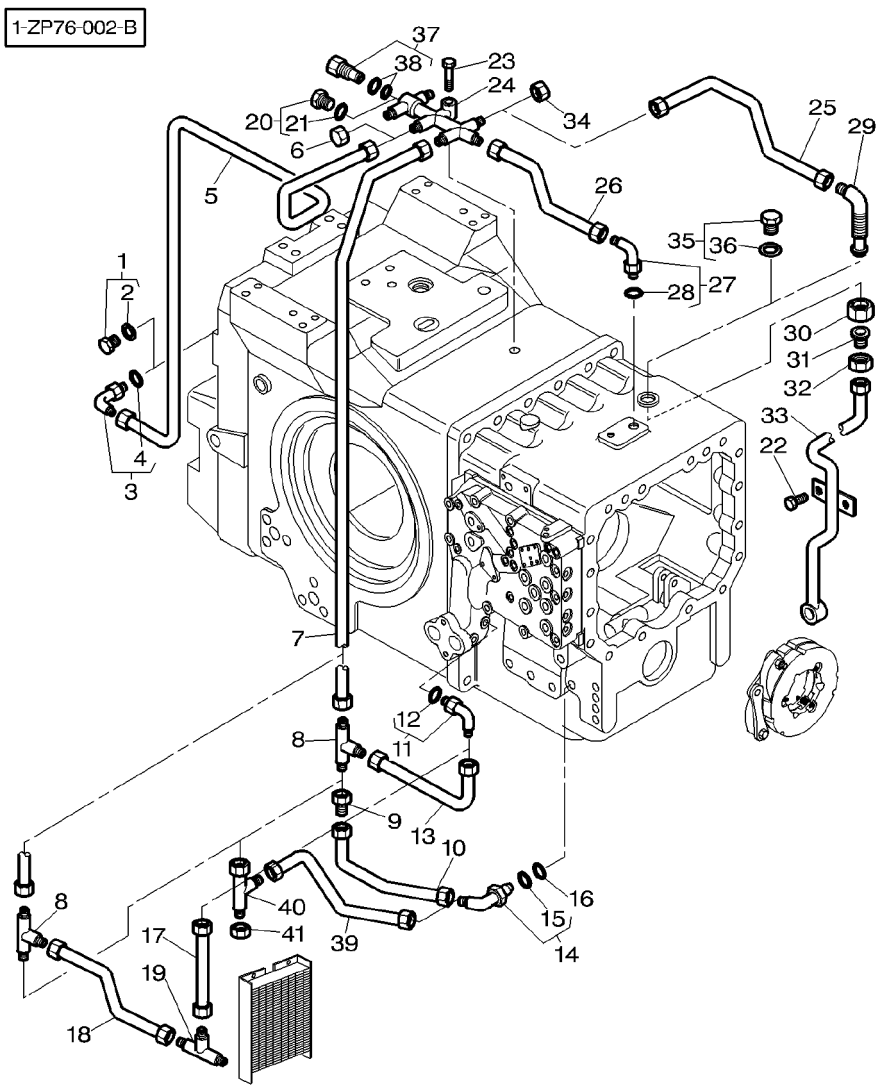

1	3019639X91	[C]		**1**	PLUG	BOUCHON TAPPO ANELLO OR	VERSCHL.STOPFEN TAPON JUNTA TORICA
2	3019395X1	1 [C]		**1**	O RING	JOINT TORIQUE ANELLO OR	O-RING JUNTA TORICA
3	3716879M91			**1**	UNION	RACCORD RACCORDO	VERSCHRAUBUNG RACOR
4	3019395X1	3		**1**	O RING	JOINT TORIQUE ANELLO OR	O-RING JUNTA TORICA
5	3790898M91			**1**	TUBE	TUBE TUBO	ROHR TUBO
6	356578X1	[C]		**1**	PLUG	BOUCHON TAPPO	VERSCHL.STOPFEN TAPON
7	3790896M91			**1**	TUBE	TUBE TUBO	ROHR TUBO
8	356561X1			**1**	UNION	RACCORD RACCORDO	VERSCHRAUBUNG RACOR
9	377651X1		J049024	**1**	REDUCER	REDUCTEUR RIDUTTORE	REDUZIERSTUECK REDUCTOR
10	3790894M91		J049024	**1**	TUBE	TUBE TUBO	ROHR TUBO
11	3019416X91			**1**	ELBOW	COUDE GOMITO	WINKELSTUECK CODO
12	3019397X1	11		**1**	O RING	JOINT TORIQUE ANELLO OR	O-RING JUNTA TORICA
13	3790892M91	[B]		**1**	TUBE	TUBE TUBO	ROHR TUBO
14	3716884M91		J049024	**1**	UNION	RACCORD RACCORDO	VERSCHRAUBUNG RACOR
14	3385713M91		J049025	**1**	UNION	RACCORD RACCORDO	VERSCHRAUBUNG RACOR
15	831497M1	14		**1**	O RING	JOINT TORIQUE ANELLO OR	O-RING JUNTA TORICA
16	3019395X1			**1**	O RING	JOINT TORIQUE ANELLO OR	O-RING JUNTA TORICA
17	3790922M91	[A]		**1**	TUBE	TUBE TUBO	ROHR TUBO
18	3790920M91	[A]		**1**	TUBE	TUBE TUBO	ROHR TUBO
19	356561X1	[A]		**1**	UNION	RACCORD RACCORDO	VERSCHRAUBUNG RACOR
20	358724X91	[B]		**1**	PLUG	BOUCHON TAPPO	VERSCHL.STOPFEN TAPON
21	831497M1	20 [B]		**1**	O RING	JOINT TORIQUE ANELLO OR	O-RING JUNTA TORICA
22	391989X1	M8x20		**2**	SCREW METRIC	VIS METRIQUE VITE METRICA	SCHRAUBE METR TORNILLO METRICO
23	339010X1	M8x40		**1**	BOLT METRIC	BOULON METRIQUE BULLONE METRICO	MASCH.SCHRB MET PERNO METRICO
24	3790871M2			**1**	BAR	BARRE BARRA	STAB BARRA
25	3790924M91			**1**	TUBE	TUBE TUBO	ROHR TUBO

Hydraulic Circuit Lube Systeme
Circuit Hydraulique Lubrification
Hydraulikleitungen Schmierungs
Circuito Idraulico Lubrificazione
Circuito Hidraulico Engrase

70-145

With Pump 45cc
Avec Pompe 45cc
Mit Pumpe 45cc
Con Pompa 45cc
Con Bomba 45cc

1-ZP76-002-B

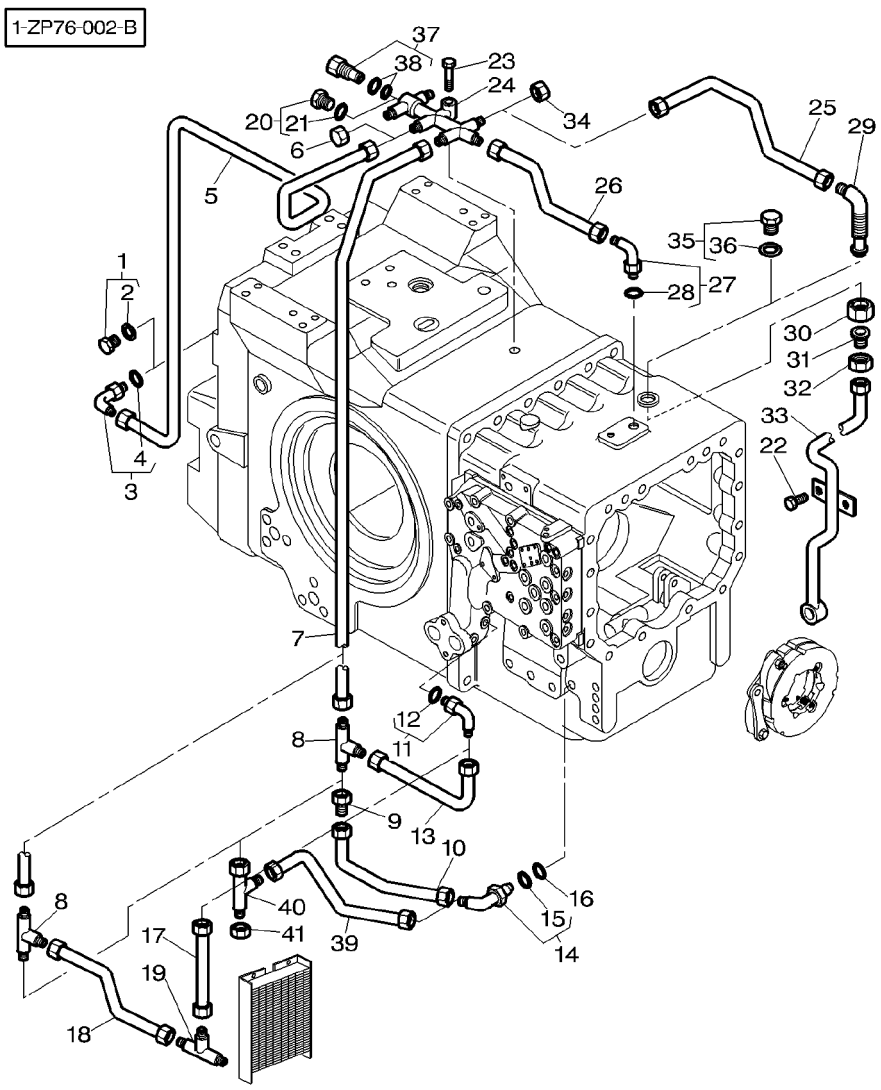

26	3790918M91		
27	3716772M91	[B]	
27	3791953M91	[A]	
28	831497M1	27	
29	3791274M91	[B]	
30	353436X1	[B]	∅ 3/4"-16
31	380003X1	[B]	
32	195960M1	[B]	∅ 3/4"
33	3790928M93	[B]	
34	70923737	[E]	
35	358724X91	[E]	
36	831497M1	35	
37	3793452M1	[A]	2,8 BARS
38	3903493M91	37 [A]	
39	3793517M1	➡	J049025
40	3793518M91	➡	J049025
41	356580X1	➡	J049025

[A] WITH DYNASHIFT
AVEC DYNASHIFT
MIT DYNASHIFT
CON DYNASHIFT
CON DYNASHIFT

[B] WITH FULL POWERSHIFT
AVEC FULL POWERSHIFT
MIT FULL POWERSHIFT
CON FULL POWERSHIFT
CON FULL POWERSHIFT

[C] WITHOUT INDEPENDANT P.T.O.
SANS PRISE DE FORCE INDEPENDANTE
OHNE UNABHAENGIGER ZAPFWELLE
SENZA PRESA DI FORZA INDEPENDENTE
SIN TOMA DE FUERZA INDEPENDIENTE

1	TUBE	TUBE	ROHR
		TUBO	TUBO
1	UNION	RACCORD	VERSCHRAUBUNG
		RACCORDO	RACOR
1	UNION	RACCORD	VERSCHRAUBUNG
		RACCORDO	RACOR
1	O RING	JOINT TORIQUE	O-RING
		ANELLO OR	JUNTA TORICA
1	UNION	RACCORD	VERSCHRAUBUNG
		RACCORDO	RACOR
1	NUT UNF	ECROU UNF	MUTTER UNF
		DADO UNF	TUERCA UNF
1	UNION	RACCORD	VERSCHRAUBUNG
		RACCORDO	RACOR
1	NUT	ECROU	MUTTER
		DADO	TUERCA
1	TUBE	TUBE	ROHR
		TUBO	TUBO
1	PLUG	BOUCHON	VERSCHL.STOPFEN
		TAPPO	TAPON
1	PLUG	BOUCHON	VERSCHL.STOPFEN
		TAPPO	TAPON
1	O RING	JOINT TORIQUE	O-RING
		ANELLO OR	JUNTA TORICA
1	NON RETURN VALVE	CLAPET	RUCKSCHLAGVENTIL
		VALVOLA NO RITOR	VALVULA DE GRANO
1	KIT, JOINT	JEU JOINTS	DICHTUNGSSATZ
		KIT GIUNTO	JUEGO JUNTAS
1	TUBE	TUBE	ROHR
		TUBO	TUBO
1	UNION	RACCORD	VERSCHRAUBUNG
		RACCORDO	RACOR
1	PLUG	BOUCHON	VERSCHL.STOPFEN
		TAPPO	TAPON

Hydraulic Circuit Lube Systeme
Circuit Hydraulique Lubrification
Hydraulikleitungen Schmierungs
Circuito Idraulico Lubrificazione
Circuito Hidraulico Engrase

70-145

With Pump 45cc
Avec Pompe 45cc
Mit Pumpe 45cc
Con Pompa 45cc
Con Bomba 45cc

1-ZP76-002-B

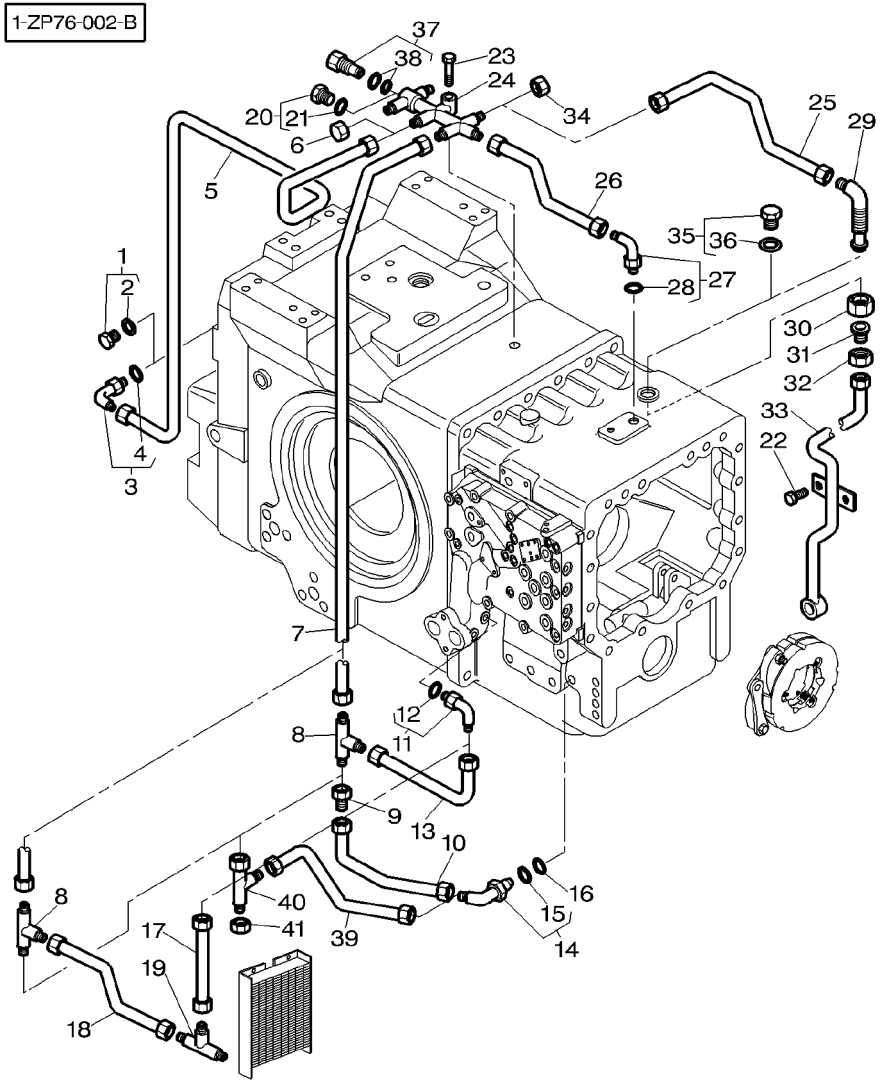

[E] WITHOUT CREEPER GEAR
SANS REDUCTEUR DE VITESSE RAMPANTE
OHNE KRIECHGANGUEBERSETZUNG
SENZA RIDUTTORE PER LENTA VELOCITA
SIN REDUCTORE DE CAMBIO

Hydraulic Circuit Lube Systeme
Circuit Hydraulique Lubrification
Hydraulikleitungen Schmierungs
Circuito Idraulico Lubrificazione
Circuito Hidraulico Engrase

70-150

With Pump 60cc / 2 − 4 Wheels Drive / Full Powersh Ift
Avec Pompe 60cc / 2 − 4 Roues Motrices / Full Powe Rshift
Mit Pumpe 60cc / 2 − 4 Rad Antrieb / Full Powershi Ft
Con Pompa 60cc / 2 − 4 Ruote Motrici / Full Powers Hift
Con Bomba 60cc / 2 − 4 Ruedas Motrice / Full Power Shift

1-ZP76-001-A

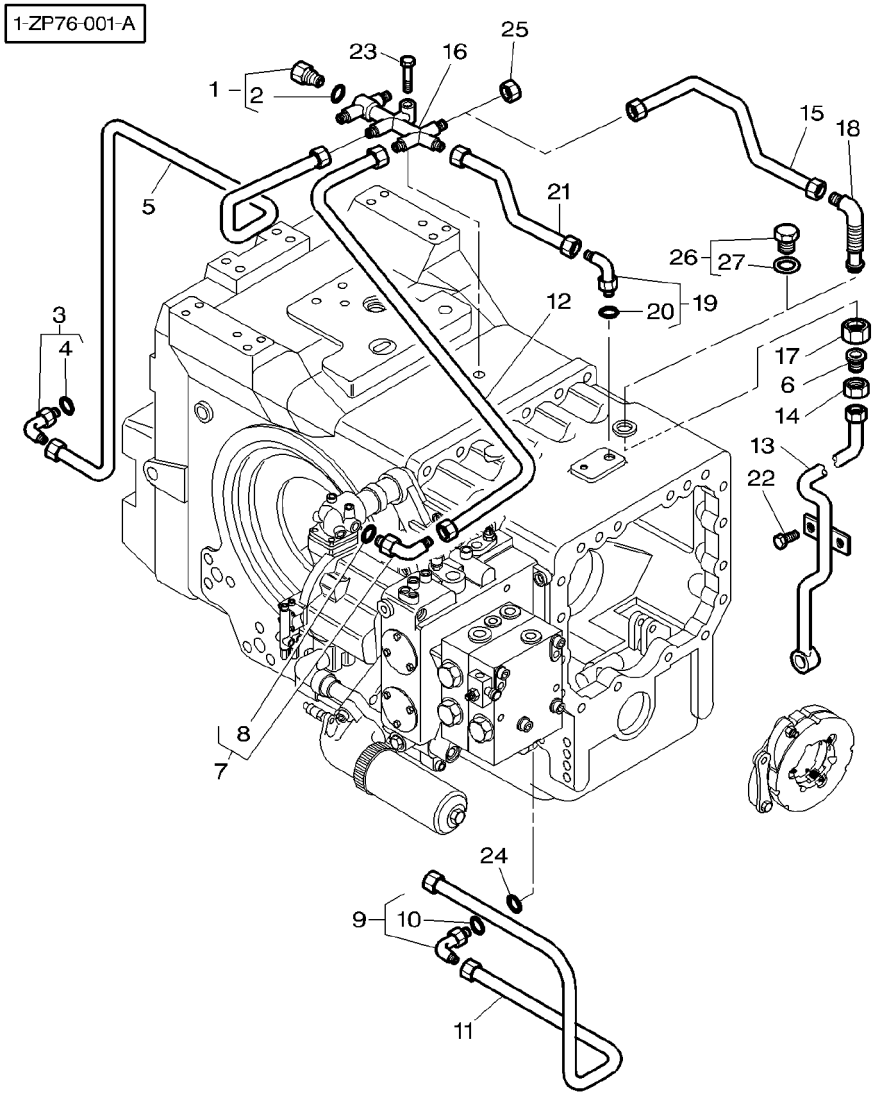

1	358724X91			1	PLUG	BOUCHON TAPPO	VERSCHL.STOPFEN TAPON
2	831497M1	1		1	O RING	JOINT TORIQUE ANELLO OR	O−RING JUNTA TORICA
3	3716879M91			1	UNION	RACCORD RACCORDO	VERSCHRAUBUNG RACOR
4	3019395X1	3		1	O RING	JOINT TORIQUE ANELLO OR	O−RING JUNTA TORICA
5	3790898M91			1	TUBE	TUBE TUBO	ROHR TUBO
6	380003X1	[B]		1	UNION	RACCORD RACCORDO	VERSCHRAUBUNG RACOR
7	3019416X91	∅ M18		1	ELBOW	COUDE GOMITO	WINKELSTUECK CODO
8	3019397X1	7		1	O RING	JOINT TORIQUE ANELLO OR	O−RING JUNTA TORICA
9	3716884M91			1	UNION	RACCORD RACCORDO	VERSCHRAUBUNG RACOR
10	831497M1	9		1	O RING	JOINT TORIQUE ANELLO OR	O−RING JUNTA TORICA
11	3792019M1			1	TUBE	TUBE TUBO	ROHR TUBO
12	3791716M1			1	TUBE	TUBE TUBO	ROHR TUBO
13	3790928M93	[B]		1	TUBE	TUBE TUBO	ROHR TUBO
14	195960M1	[B]		1	NUT	ECROU DADO	MUTTER TUERCA
15	3790924M91	[B]		1	TUBE	TUBE TUBO	ROHR TUBO
16	3790871M2			1	BAR	BARRE BARRA	STAB BARRA
17	353436X1	[B]		1	NUT UNF	ECROU UNF DADO UNF	MUTTER UNF TUERCA UNF
18	3791274M91	[B]		1	UNION	RACCORD RACCORDO	VERSCHRAUBUNG RACOR
19	3791953M91	➡	H174011	1	UNION	RACCORD RACCORDO	VERSCHRAUBUNG RACOR
19	3716772M91		➡ H174012	1	UNION	RACCORD RACCORDO	VERSCHRAUBUNG RACOR
20	831497M1	19		1	O RING	JOINT TORIQUE ANELLO OR	O−RING JUNTA TORICA
21	3790918M91			1	TUBE	TUBE TUBO	ROHR TUBO
22	391989X1	[B] M8X20		2	SCREW METRIC	VIS METRIQUE VITE METRICA	SCHRAUBE METR TORNILLO METRICO
23	339010X1	M8X40		1	BOLT METRIC	BOULON METRIQUE BULLONE METRICO	MASCH.SCHRB MET PERNO METRICO
24	3019395X1			1	O RING	JOINT TORIQUE ANELLO OR	O−RING JUNTA TORICA
25	70923737	[C]		1	PLUG	BOUCHON TAPPO	VERSCHL.STOPFEN TAPON

Hydraulic Circuit Lube Systeme
Circuit Hydraulique Lubrification
Hydraulikleitungen Schmierungs
Circuito Idraulico Lubrificazione
Circuito Hidraulico Engrase

70-150

With Pump 60cc / 2 − 4 Wheels Drive / Full Powersh Ift
Avec Pompe 60cc / 2 − 4 Roues Motrices / Full Powe Rshift
Mit Pumpe 60cc / 2 − 4 Rad Antrieb / Full Powershi Ft
Con Pompa 60cc / 2 − 4 Ruote Motrici / Full Powers Hift
Con Bomba 60cc / 2 − 4 Ruedas Motrice / Full Power Shift

1-ZP76-001-A

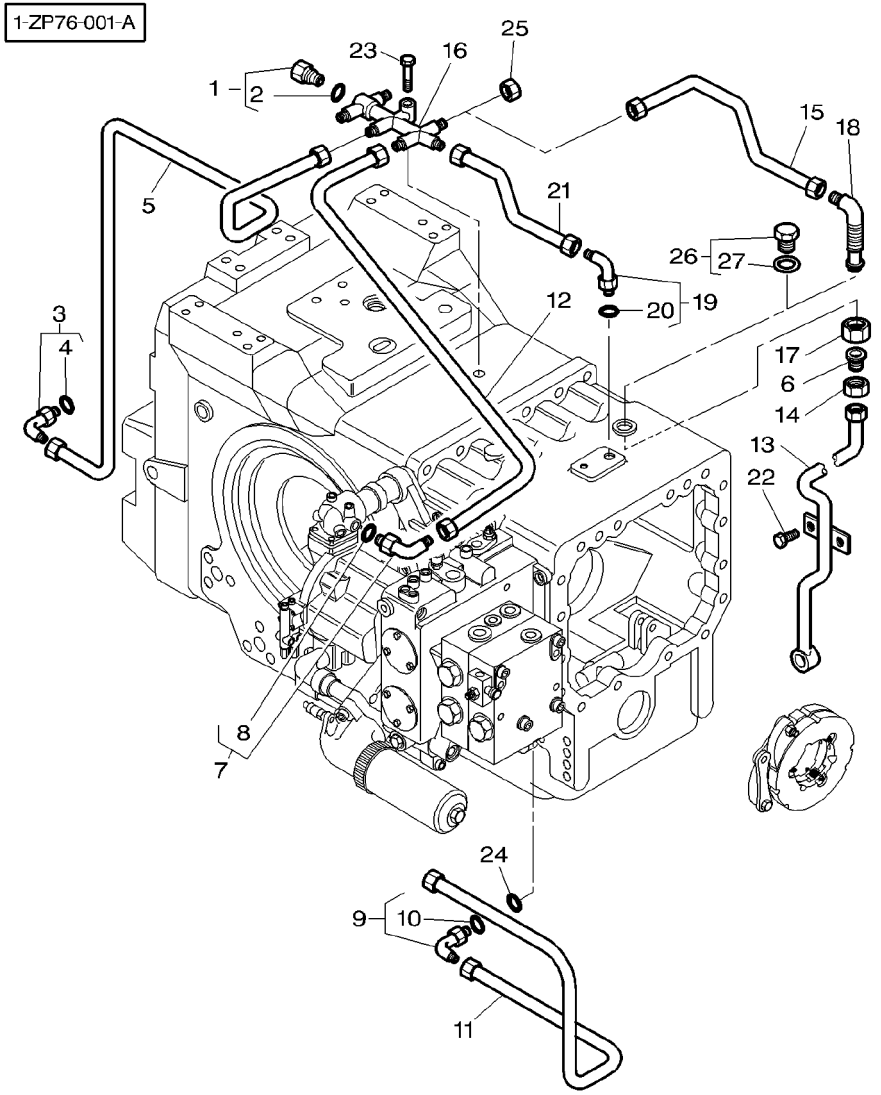

26	358724X91		[C]	**1**	PLUG	BOUCHON TAPPO VERSCHL.STOPFEN TAPON
27	831497M1	26	[C]	**1**	O RING	JOINT TORIQUE ANELLO OR O−RING JUNTA TORICA

[B] WITH CREEPER GEAR
AVEC REDUCTEUR DE VITESSE RAMPANTE
MIT KRIECHGANGUEBERSETZUNG
CON RIDUTTORE PER LENTA VELOCITA
CON REDUCTORE DE VELOCIDADE LENTA

[C] WITHOUT CREEPER GEAR
SANS REDUCTEUR DE VITESSE RAMPANTE
OHNE KRIECHGANGUEBERSETZUNG
SENZA RIDUTTORE PER LENTA VELOCITA
SIN REDUCTORE DE CAMBIO

Oil Cooler
Refroidisseur D'Huile
Oelkuehler
Radiatore Olio
Enfriador El Aciete

70-155

With Dynashift
Avec Dynashift
Mit Dynashift
Con Dynashift
Con Dynashift

1-ZP19-008-A

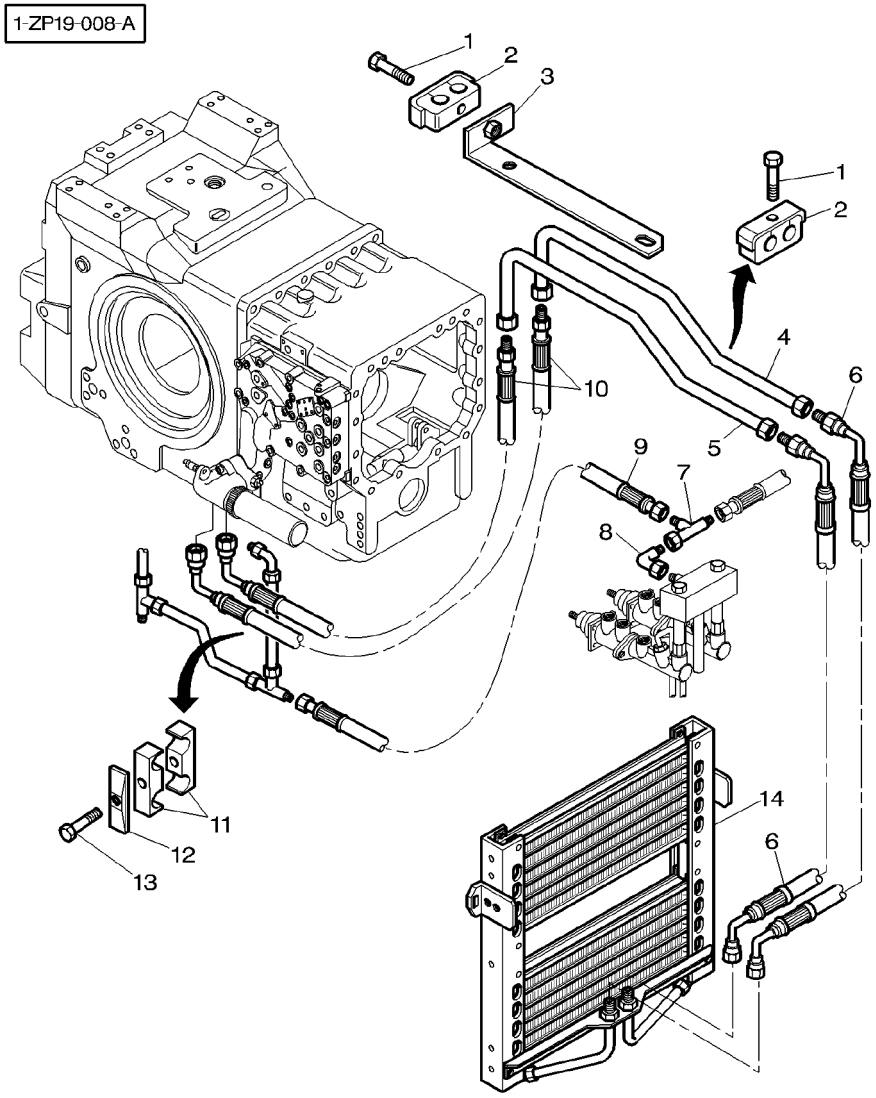

1	339011X1	M8X45	**2**	BOLT METRIC	BOULON METRIQUE BULLONE METRICO	MASCH.SCHRB MET PERNO METRICO
2	3781936M1		**2**	BRIDLE	BRIDE BRIGLIA	SPANNBAND BRIDA
3	3781921M2		**1**	SUPPORT	SUPPORT SUPPORTO	LAGERUNG DISPOS.DE SOSTEN
4	3782603M1		**1**	TUBE	TUBE TUBO	ROHR TUBO
5	3782604M1		**1**	TUBE	TUBE TUBO	ROHR TUBO
6	3781918M2	◀▶ 950MM	**2**	HYDR HOSE	FLEXIBLE TUBOFLEX IDRAUL	HYDR SCHLAUCH TUBO HIDRAULICO
7	3791175M92		**1**	UNION	RACCORD RACCORDO	VERSCHRAUBUNG RACOR
8	364603X1		**1**	ELBOW	COUDE GOMITO	WINKELSTUECK CODO
9	3781572M1	◀▶ 2200MM	**1**	HYDR HOSE	FLEXIBLE TUBOFLEX IDRAUL	HYDR SCHLAUCH TUBO HIDRAULICO
10	3782869M1	◀▶ 2300MM	**2**	HYDR HOSE	FLEXIBLE TUBOFLEX IDRAUL	HYDR SCHLAUCH TUBO HIDRAULICO
11	3780682M1		**2**	BRIDLE	BRIDE BRIGLIA	SPANNBAND BRIDA
12	3780683M1		**1**	PLATE	PLAQUE PIASTRA	PLATTE PLATO
13	339011X1	M8X45	**1**	BOLT METRIC	BOULON METRIQUE BULLONE METRICO	MASCH.SCHRB MET PERNO METRICO
14	3780275M2	👁 70-165 No 1	**1**	OIL COOLER	REFROIDISS HUILE RADIATORE OLIO	OELKUEHLER REFRIG DE ACEIT

Oil Cooler
Refroidisseur D'Huile
Oelkuehler
Radiatore Olio
Enfriador El Aciete

70-160

With Full Powershift
Avec Full Powershift
Mit Full Powershift
Con Full Powershift
Con Full Powershift

1-ZP19-005-B

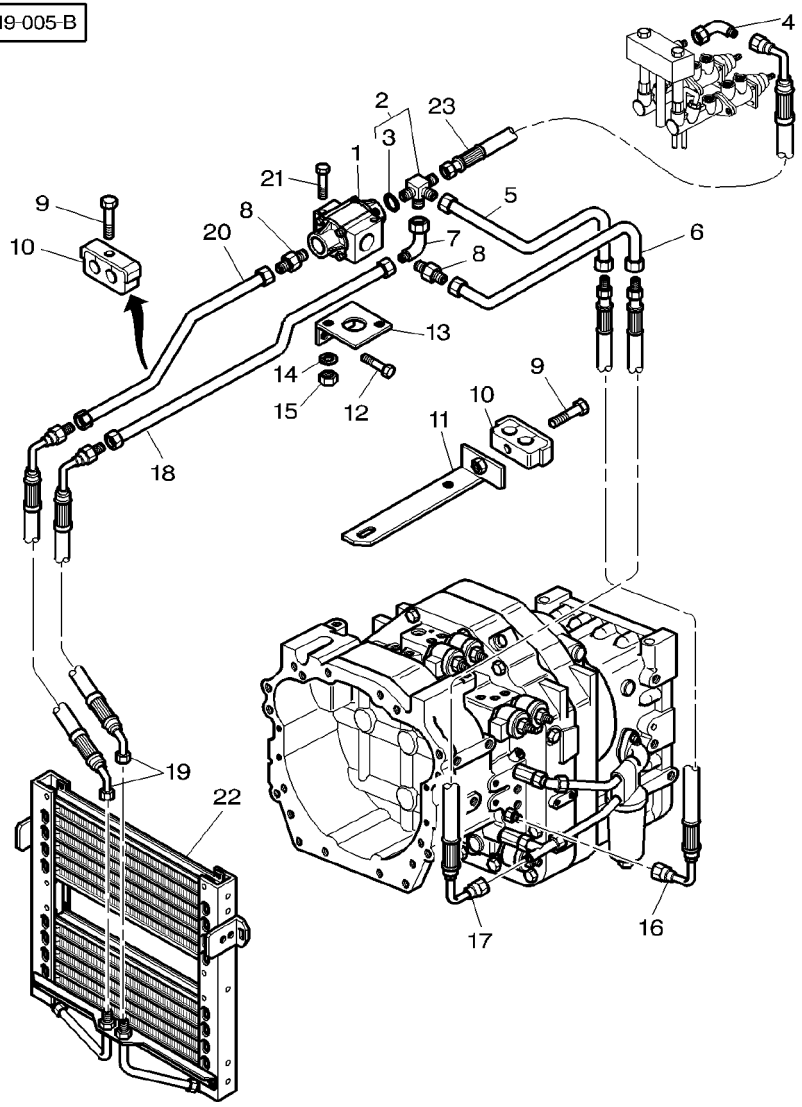

1	3790883M1	👁 70−170 No 1	1	PRESSURE VALVE	VALVE VALVOLA PRESSION	DRUCKVENTIL VALVULA PRESION
2	5016401M91		1	PRESSURE VALVE	VALVE VALVOLA PRESSION	DRUCKVENTIL VALVULA PRESION
3	835026M1	2	1	O RING	JOINT TORIQUE ANELLO OR	O−RING JUNTA TORICA
4	3791382M91		1	UNION	RACCORD RACCORDO	VERSCHRAUBUNG RACOR
5	3781915M1		1	TUBE	TUBE TUBO	ROHR TUBO
6	3781914M1		1	TUBE	TUBE TUBO	ROHR TUBO
7	366462X1		1	ELBOW	COUDE GOMITO	WINKELSTUECK CODO
8	70935768		2	CONNECTOR	BORNE MORSETTO	DOPPELNIPPEL CONECTOR
9	339011X1	M8X45	2	BOLT METRIC	BOULON METRIQUE BULLONE METRICO	MASCH.SCHRB MET PERNO METRICO
10	3781936M1		2	BRIDLE	BRIDE BRIGLIA	SPANNBAND BRIDA
11	3781921M2		1	SUPPORT	SUPPORT SUPPORTO	LAGERUNG DISPOS.DE SOSTEN
12	339124X1	M8X16	2	SCREW METRIC	VIS METRIQUE VITE METRICA	SCHRAUBE METR TORNILLO METRICO
13	3781953M1		1	SUPPORT	SUPPORT SUPPORTO	LAGERUNG DISPOS.DE SOSTEN
14	390734X1		2	WASHER METRIC	RONDELLE METR. RONDELLA METRICO	SCHEIBE METRISCH ARANDELA METRICO
15	3009693X1		2	NUT METRIC	ECROU METRIQUE DADO METRICO	MUTTER METRISCH TUERCA METRICO
16	3781919M1	◀▶ 950MM	1	HYDR HOSE	FLEXIBLE TUBOFLEX IDRAUL	HYDR SCHLAUCH TUBO HIDRAULICO
17	3781920M1	◀▶ 1050MM	1	HYDR HOSE	FLEXIBLE TUBOFLEX IDRAUL	HYDR SCHLAUCH TUBO HIDRAULICO
18	3781913M1		1	TUBE	TUBE TUBO	ROHR TUBO
19	3781918M2		2	HYDR HOSE	FLEXIBLE TUBOFLEX IDRAUL	HYDR SCHLAUCH TUBO HIDRAULICO
20	3781912M1		1	TUBE	TUBE TUBO	ROHR TUBO
21	3009502X1	M10X80	2	BOLT METRIC	BOULON METRIQUE BULLONE METRICO	MASCH.SCHRB MET PERNO METRICO
22	3780275M2	👁 70−165 No 1	1	OIL COOLER	REFROIDISS HUILE RADIATORE OLIO	OELKUEHLER REFRIG DE ACEIT
23	3781174M1	◀▶ 600MM	1	HYDR HOSE	FLEXIBLE TUBOFLEX IDRAUL	HYDR SCHLAUCH TUBO HIDRAULICO

Oil Cooler
Refroidisseur D'Huile
Oelkuehler
Radiatore Olio
Enfriador El Aciete

70-165

1-ZP19-004-A

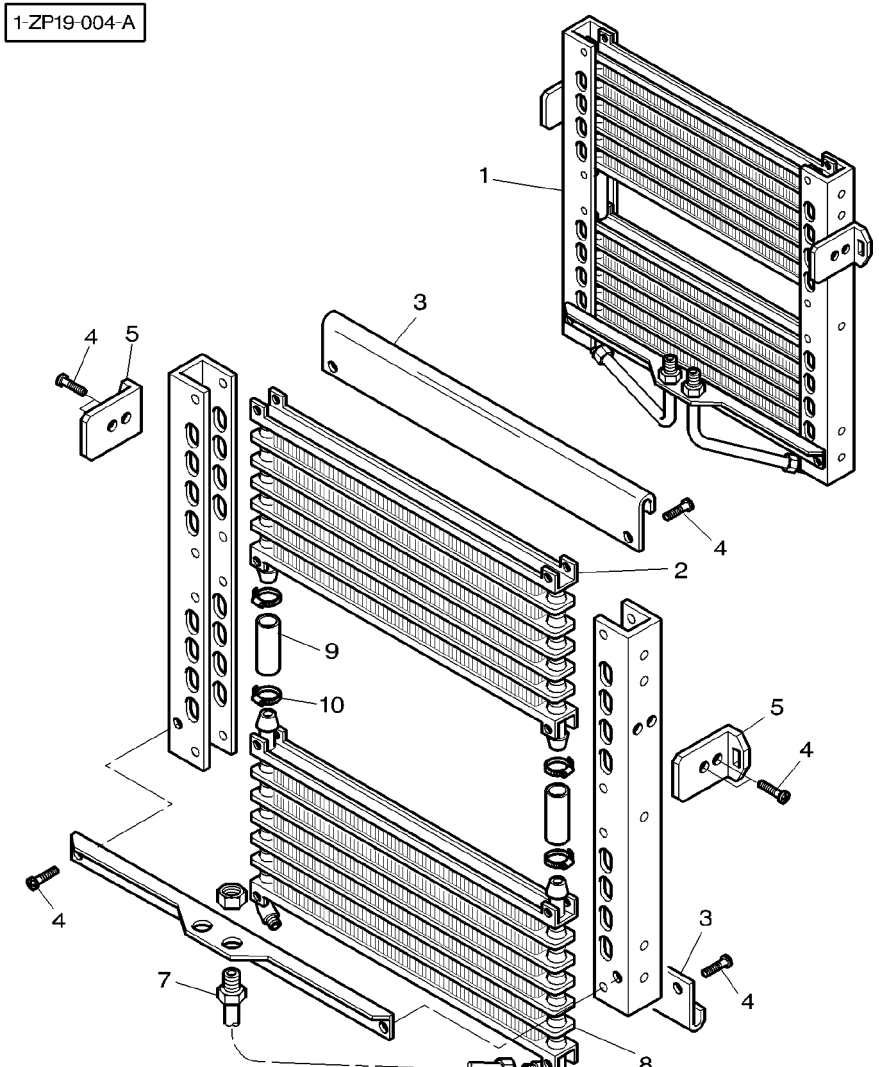

1	3780275M2		**1**	OIL COOLER	REFROIDISS HUILE RADIATORE OLIO	OELKUEHLER REFRIG DE ACEIT
2	3903406M1	1	**1**	OIL COOLER	REFROIDISS HUILE RADIATORE OLIO	OELKUEHLER REFRIG DE ACEIT
3	3903404M1	1	**2**	GUIDE	GUIDE GUIDA	FUEHRUNG GUIA
4	3007920X1	1 M6X12	**10**	SCREW METRIC	VIS METRIQUE VITE METRICA	SCHRAUBE METR TORNILLO METRICO
5	3903403M1	1	**2**	SUPPORT	SUPPORT SUPPORTO	LAGERUNG DISPOS.DE SOSTEN
6	3903402M1	1	**1**	SUPPORT	SUPPORT SUPPORTO	LAGERUNG DISPOS.DE SOSTEN
7	3903401M91	1	**2**	TUBE	TUBE TUBO	ROHR TUBO
8	3903407M1	1	**1**	OIL COOLER	REFROIDISS HUILE RADIATORE OLIO	OELKUEHLER REFRIG DE ACEIT
9	3903405M1	1	**2**	HOSE	DURITE TUBO FLESSIBILE	SCHLAUCH FLEXIBLE
10	3019566X1	1	**4**	CLAMP	COLLIER FASCETTA	HALTESCHELLE ABRAZADERA

Hydraulic Valve
Valve Hydraulique
Hydraulikventil
Valvola Idraulica
Valvula Hidraulica

70-170

With Full Powershift
Avec Full Powershift
Mit Full Powershift
Con Full Powershift
Con Full Powershift

1-ZP01-001-A

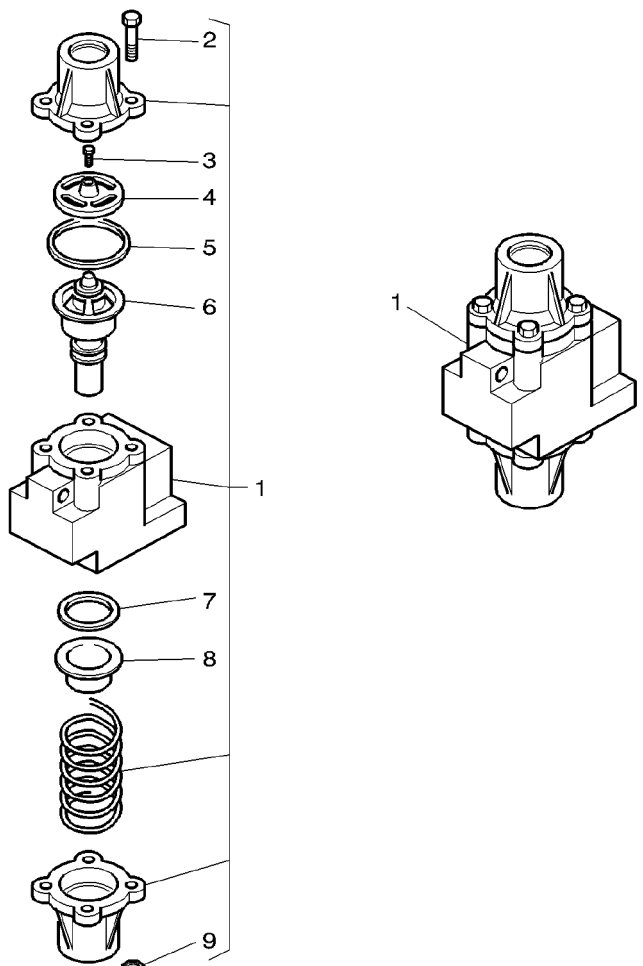

1	3790883M1		**1**	PRESSURE VALVE	VALVE VALVOLA PRESSION	DRUCKVENTIL VALVULA PRESION
2	70934293	1	**4**	BOLT	BOULON BULLONE	MASCH.SCHRAUBE PERNO
3	72514302	1	**1**	SCREW	VIS VITE	SCHRAUBE TORNILLO
4	72514301	1	**1**	WASHER	RONDELLE RONDELLA	UNTERLEGSCHEIBE ARANDELA
5	72511856	1	**1**	SEAL	JOINT ETANCHEITE PARAOLIO	DICHTRING RETEN
6	72514303	1	**1**	PRESSURE VALVE	VALVE VALVOLA PRESSION	DRUCKVENTIL VALVULA PRESION
7	72511856	1	**1**	SEAL	JOINT ETANCHEITE PARAOLIO	DICHTRING RETEN
8	72511858	1	**1**	SEAL	JOINT ETANCHEITE PARAOLIO	DICHTRING RETEN
9	70923358	1	**4**	NUT	ECROU DADO	MUTTER TUERCA

Brakes **Freins** **Bremsen** **Freni** **Frenos**	**Pedals** **Pedale** **Pedals** **Pedale** **Pedals**	**70-175**	**With Cab** **Avec Cabine** **Mit Schlepperkabine** **Con Cabina** **Con Cabina**

1-ZG16-003-C

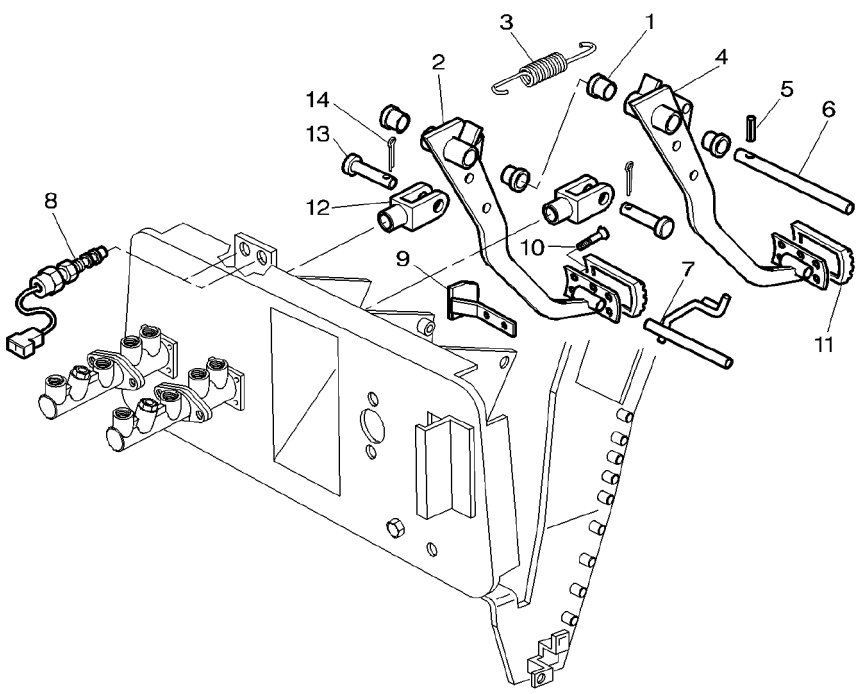

1	3385604M1		**4**	BEARING	COUSSINET CUSCINETTO	LAGER COJINETE
2	3782118M1	▶	**1**	BRAKE PAD	PEDALE DE FREIN PASTIGLIA FRENO	BREMSKLOTZ PASTILLA D FRENO
3	3781689M1		**2**	SPRING	RESSORT MOLLA	FEDER MUELLE
4	3782117M1	◀	**1**	BRAKE PAD	PEDALE DE FREIN PASTIGLIA FRENO	BREMSKLOTZ PASTILLA D FRENO
5	391290X1	5X30	**1**	PIN	GOUPILLE PERNO	BOLZEN PASADOR
6	3713576M1		**1**	CLEVIS PIN	AXE PERNO D'ATTACCO	SPLINTBOLZEN BULON CILINDRICO
7	3583930M3		**1**	LATCH	VERROU SALISCENDI	RIEGEL CERROJO
8	***3780395M2***		**2**	SWITCH,INDIRECT	CONTACTEUR INTERRUTTORE IND	KONTAKTSCHALTER CONTACTOR
9	3714488M3		**1**	STOP	BUTEE STOP	ANSCHLAG PARO
10	392404X1		**2**	SCREW	VIS VITE	SCHRAUBE TORNILLO
11	1626321M2		**2**	SKATE	PATIN PATTINO	SCHLITTEN-KUFE PATIN
12	3385612M3	[A] ◀▶ 51MM	**2**	CLEVIS	CHAPE GANCIO D'ATTACCO	GABELSTUECK GANCHO SEGURI.
12	3384656M1	◀▶ 61MM	**2**	CLEVIS	CHAPE GANCIO D'ATTACCO	GABELSTUECK GANCHO SEGURI.
13	3019213X1		**2**	CLEVIS PIN	AXE PERNO D'ATTACCO	SPLINTBOLZEN BULON CILINDRICO
14	357146X1	2,8X25MM	**2**	PIN	GOUPILLE PERNO	BOLZEN PASADOR

[A] WITH ASSISTED BRAKE
AVEC FREIN ASSISTE
MIT HILSKRAFTBREMSE
CON FRENO ASSISTITE
CON FRENO ASISTIDE

Brakes	**Pedals**	**70-180**	**With Platform**
Freins	**Pedale**		**Avec Plateforme**
Bremsen	**Pedals**		**Mit Plattform**
Freni	**Pedale**		**Con Plattaforma**
Frenos	**Pedals**		**Con Plataforma**

1-ZG16-004-A

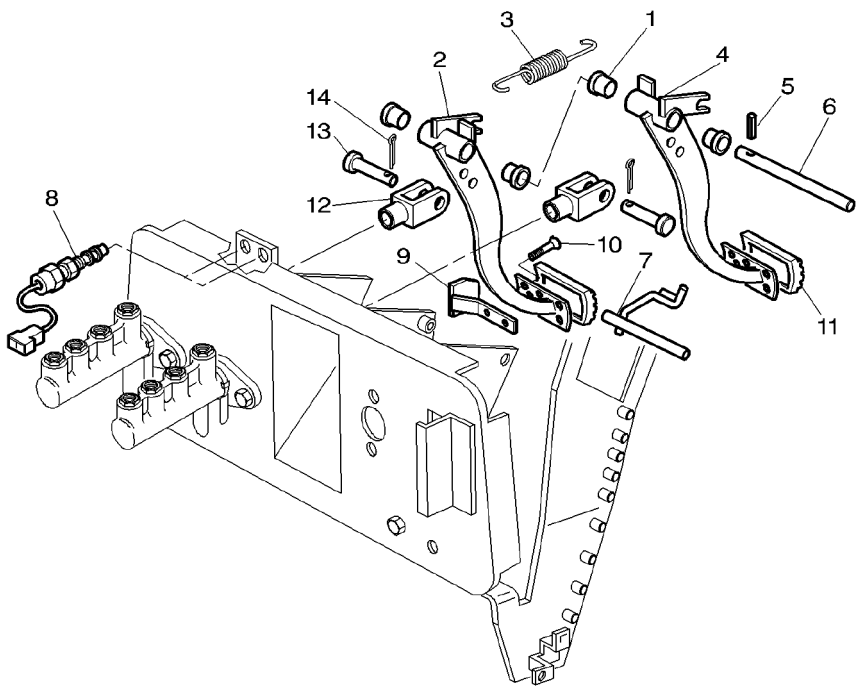

1	3385604M1		**4**	BEARING	COUSSINET CUSCINETTO	LAGER COJINETE
2	3583924M2	▶	**1**	PEDAL	PEDALE PEDALE	PEDAL PEDAL
3	3384657M1		**2**	SPRING	RESSORT MOLLA	FEDER MUELLE
4	3583925M1	◀	**1**	PEDAL	PEDALE PEDALE	PEDAL PEDAL
5	391290X1	5X30	**1**	PIN	GOUPILLE PERNO	BOLZEN PASADOR
6	3713576M1		**1**	CLEVIS PIN	AXE PERNO D'ATTACCO	SPLINTBOLZEN BULON CILINDRICO
7	3583930M3		**1**	LATCH	VERROU SALISCENDI	RIEGEL CERROJO
8	***3780395M2***		**2**	SWITCH,INDIRECT	CONTACTEUR INTERRUTTORE IND	KONTAKTSCHALTER CONTACTOR
9	3714488M3		**1**	STOP	BUTEE STOP	ANSCHLAG PARO
10	392404X1		**2**	SCREW	VIS VITE	SCHRAUBE TORNILLO
11	1626321M2		**2**	SKATE	PATIN PATTINO	SCHLITTEN-KUFE PATIN
12	3384656M1	◀▶ 61MM	**2**	CLEVIS	CHAPE GANCIO D'ATTACCO	GABELSTUECK GANCHO SEGURI.
13	3019213X1		**2**	CLEVIS PIN	AXE PERNO D'ATTACCO	SPLINTBOLZEN BULON CILINDRICO
14	357146X1	2,8X25MM	**2**	PIN	GOUPILLE PERNO	BOLZEN PASADOR

Brakes **Freins** **Bremsen** **Freno** **Frenos**	**Master Cylinder** **Maitre Cylindre** **Hauptbremszylinder** **Cilindro Principale** **Cilindro Maestro**	**70-185**

Assisted − Without Trailer Braking
Assiste − Sans Freinage De Remorque
Assisteenkhilf − Ohne Anhaengerbremse
Servo − Senza Freno Per Remorchio
Assistados − Sin Freno De Remolque

1-ZG18-001-B

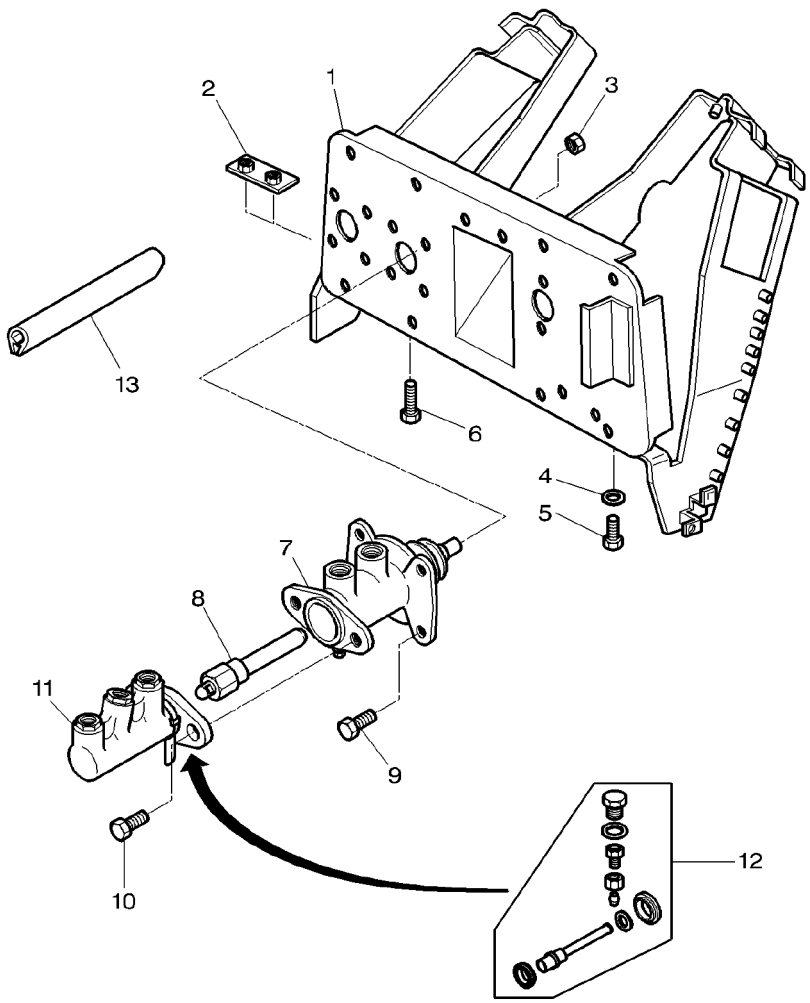

1	3713562M96		**1**	SUPPORT	SUPPORT SUPPORTO	LAGERUNG DISPOS.DE SOSTEN
2	3714445M1		**1**	STOP	BUTEE STOP	ANSCHLAG PARO
3	339169X1		**4**	NUT METRIC	ECROU METRIQUE DADO METRICO	MUTTER METRISCH TUERCA METRICO
4	390972X1		**8**	WASHER METRIC	RONDELLE METR. RONDELLA METRICO	SCHEIBE METRISCH ARANDELA METRICO
5	339123X1	M8X20	**8**	SCREW METRIC	VIS METRIQUE VITE METRICA	SCHRAUBE METR TORNILLO METRICO
6	339666X1	M6X20	**2**	SCREW METRIC	VIS METRIQUE VITE METRICA	SCHRAUBE METR TORNILLO METRICO
7	3617596M1		**2**	BRAKE CYLINDER	CYLINDRE FREIN CILINDRO FRENO	BREMSZYLINDER CILINDRO FRENO
8	3617594M93		**2**	STEM	TIGE STELO	STIEL VASTAGO
9	339761X1	M8X25	**8**	SCREW METRIC	VIS METRIQUE VITE METRICA	SCHRAUBE METR TORNILLO METRICO
10	339761X1	M8X25	**4**	SCREW METRIC	VIS METRIQUE VITE METRICA	SCHRAUBE METR TORNILLO METRICO
11	3384685M3		**2**	MAIN CYLINDER	MAITRE CYLINDRE CILINDRO PRINCIP	HAUPTZYLINDER CILINDRO PRINCIP
12	1810832M91	11	**1**	KIT, REPAIR	JEU REPARATION KIT RIPARAZIONE	REPARATURSATZ JUEGO REPARACION
13	3580695M1	◄► 1600MM	**1**	GASKET	JOINT GUARNIZIONE	DICHTSCHEIBE EMPAQUETADURA.

1-ZG18-004-A

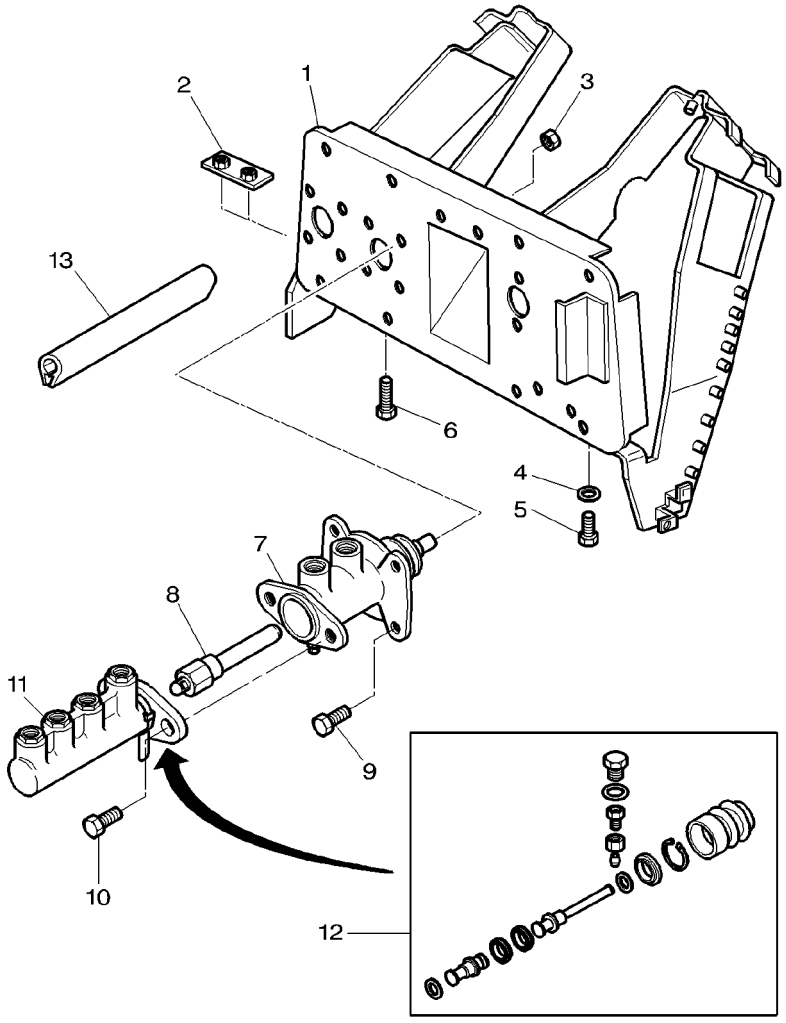

1	3713562M96		**1**	SUPPORT	SUPPORT SUPPORTO	LAGERUNG DISPOS.DE SOSTEN
2	3714445M1		**1**	STOP	BUTEE STOP	ANSCHLAG PARO
3	339169X1		**4**	NUT METRIC	ECROU METRIQUE DADO METRICO	MUTTER METRISCH TUERCA METRICO
4	390972X1		**8**	WASHER METRIC	RONDELLE METR. RONDELLA METRICO	SCHEIBE METRISCH ARANDELA METRICO
5	339123X1	M8X20	**8**	SCREW METRIC	VIS METRIQUE VITE METRICA	SCHRAUBE METR TORNILLO METRICO
6	339666X1	M6X20	**2**	SCREW METRIC	VIS METRIQUE VITE METRICA	SCHRAUBE METR TORNILLO METRICO
7	3617596M1		**2**	BRAKE CYLINDER	CYLINDRE FREIN CILINDRO FRENO	BREMSZYLINDER CILINDRO FRENO
8	3617594M93		**2**	STEM	TIGE STELO	STIEL VASTAGO
9	339761X1	M8X25	**8**	SCREW METRIC	VIS METRIQUE VITE METRICA	SCHRAUBE METR TORNILLO METRICO
10	339761X1	M8X25	**4**	SCREW METRIC	VIS METRIQUE VITE METRICA	SCHRAUBE METR TORNILLO METRICO
11	**3383079M5**		**2**	MAIN CYLINDER	MAITRE CYLINDRE CILINDRO PRINCIP	HAUPTZYLINDER CILINDRO PRINCIP
12	1810833M91	12	**1**	KIT, REPAIR	JEU REPARATION KIT RIPARAZIONE	REPARATURSATZ JUEGO REPARACION
13	3580695M1	◄► 1600 MM	**1**	GASKET	JOINT GUARNIZIONE	DICHTSCHEIBE EMPAQUETADURA.

Brakes **Freins** **Bremsen** **Freno** **Frenos**	**Master Cylinder** **Maitre Cylindre** **Hauptbremszylinder** **Cilindro Principale** **Cilindro Maestro**	**70-195**	**With Platform** **Avec Plateforme** **Mit Plattform** **Con Plattaforma** **Con Plataforma**

1-ZG18-005-A

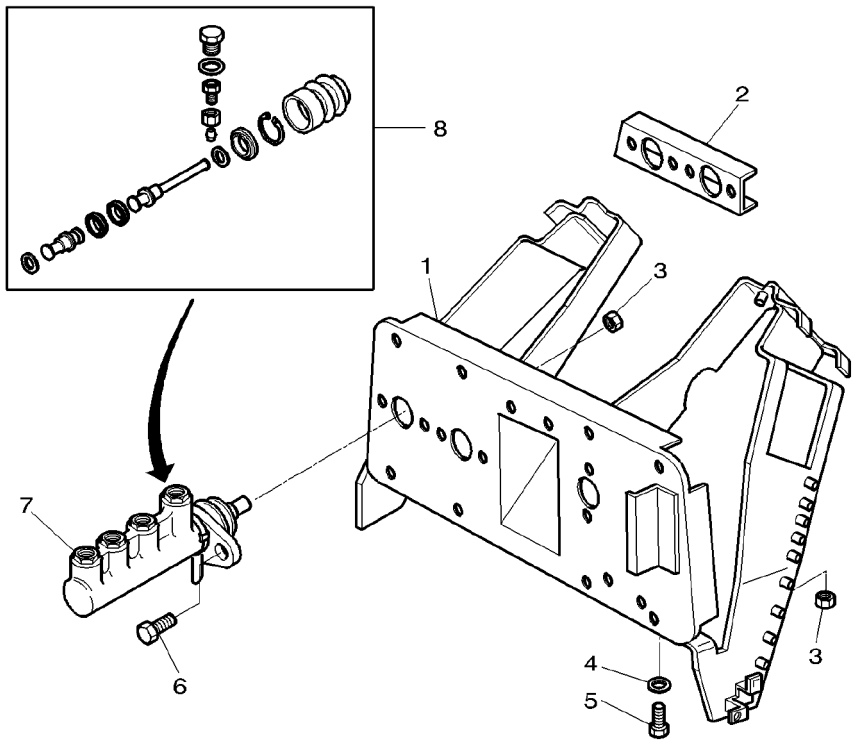

1	3713561M96		**1**	SUPPORT	SUPPORT SUPPORTO	LAGERUNG DISPOS.DE SOSTEN
2	3617305M92		**1**	REINFORCEMENT	RENFORT RINFORZO	VERSTAERKUNG REFUERZO
3	339169X1		**2**	NUT METRIC	ECROU METRIQUE DADO METRICO	MUTTER METRISCH TUERCA METRICO
4	390972X1		**8**	WASHER METRIC	RONDELLE METR. RONDELLA METRICO	SCHEIBE METRISCH ARANDELA METRICO
5	339123X1	M8X20	**8**	SCREW METRIC	VIS METRIQUE VITE METRICA	SCHRAUBE METR TORNILLO METRICO
6	339761X1		**4**	SCREW METRIC	VIS METRIQUE VITE METRICA	SCHRAUBE METR TORNILLO METRICO
7	**3383079M5**		**2**	MAIN CYLINDER	MAITRE CYLINDRE CILINDRO PRINCIP	HAUPTZYLINDER CILINDRO PRINCIP
8	1810833M91	7	**1**	KIT, REPAIR	JEU REPARATION KIT RIPARAZIONE	REPARATURSATZ JUEGO REPARACION

Brakes	Brake Pipes And Master Cylinder
Freins	Tubes De Frein Et Maitre Cylindre
Bremsen	Hydraulikleitung−Hauptbremszylind
Freni	Tubazioni Freno−Cilindro Princip.
Frenos	Tubos Frenos Y Cilindro Principal

70-200

Assisted − Without Trailer Braking
Assiste − Sans Freinage De Remorque
Assisteenkhilf − Ohne Anhaengerbremse
Servo − Senza Freno Per Remorchio
Assistados − Sin Freno De Remolque

1-ZG32-001-A

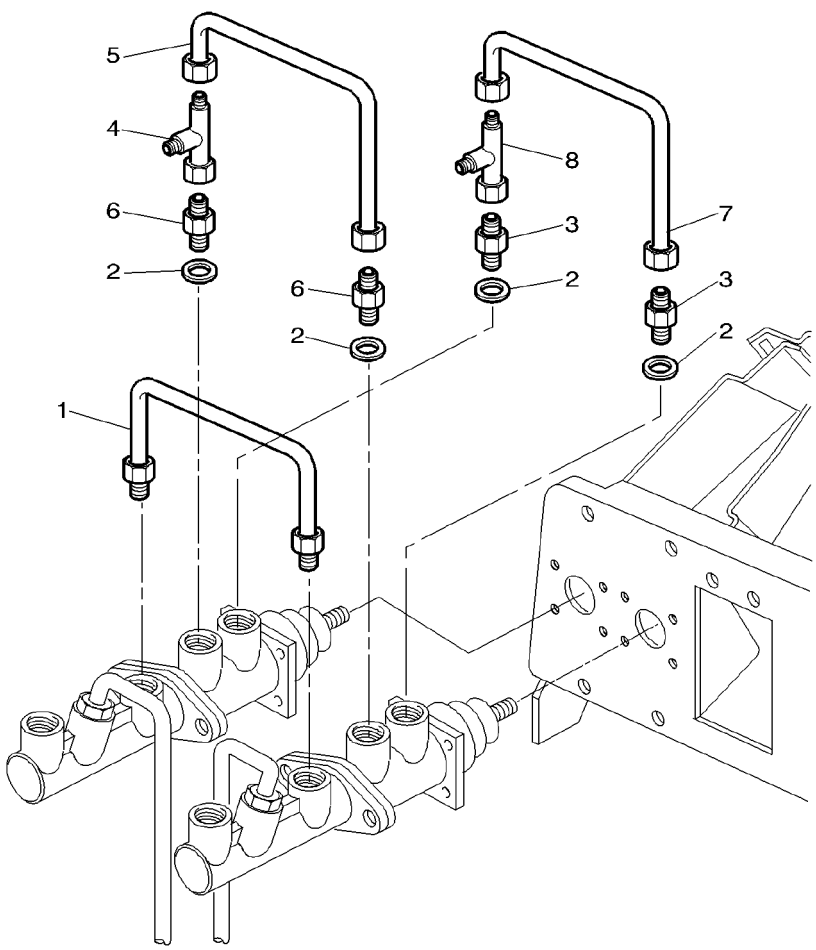

1	3386681M92		**1**	TUBE	TUBE TUBO	ROHR TUBO
2	3004861X1		**4**	WASHER	RONDELLE RONDELLA	UNTERLEGSCHEIBE ARANDELA
3	**3019574X1**		**2**	UNION	RACCORD RACCORDO	VERSCHRAUBUNG RACOR
4	364735X1	3/4"−16	**1**	UNION	RACCORD RACCORDO	VERSCHRAUBUNG RACOR
5	3387574M91		**1**	TUBE	TUBE TUBO	ROHR TUBO
6	3019382X1		**2**	UNION	RACCORD RACCORDO	VERSCHRAUBUNG RACOR
7	3386678M91		**1**	TUBE	TUBE TUBO	ROHR TUBO
8	377218X1	9/16"−18	**1**	TEEPIECE	TE RACCORDO A T	T−STUECK PIEZA EN T

Brakes	**Assisted− Pipes And Fitting**
Freins	**Assiste − Tuyauteries Et Montage**
Bremsen	**Servo − Leitungen Und Anschluesse**
Freni	**Servo − Tubos Idraul. E Montaggio**
Frenos	**Assistados − Tuberias Y Accesorio**

70-205

Assisted − Without Trailer Braking
Assiste − Sans Freinage De Remorque
Assisteenkhilf − Ohne Anhaengerbremse
Servo − Senza Freno Per Remorchio
Assistados − Sin Freno De Remolque

1-ZP78-010-A

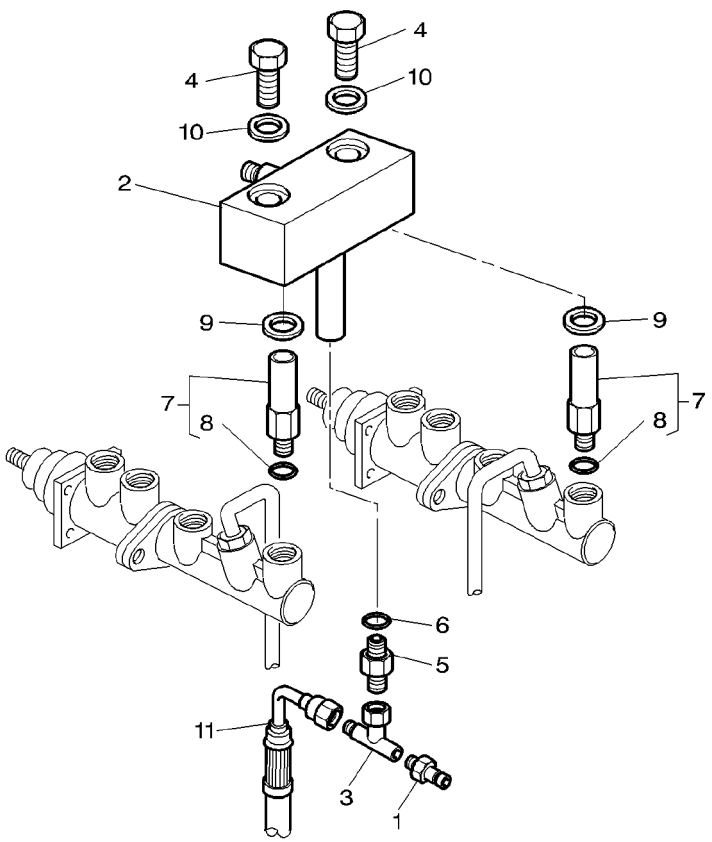

1	***3384387M1***		**1**	PRESSURE INTAKE	PRISE PRESSION PRESA PRESSIONE	ANSAUGDRUCK ENTRADA PRESION
2	3778712M93		**1**	TANK	RESERVOIR SERBATOIO	TANK TANQUE
3	3780180M1		**1**	TEEPIECE	TE RACCORDO A T	T−STUECK PIEZA EN T
4	339123X1	M8X20	**2**	SCREW METRIC	VIS METRIQUE VITE METRICA	SCHRAUBE METR TORNILLO METRICO
5	3617226M1		**1**	JET	GICLEUR GETTO	SPRITZDUESE SURTIDOR
6	3019395X1		**1**	O RING	JOINT TORIQUE ANELLO OR	O−RING JUNTA TORICA
7	3778718M92		**2**	UNION	RACCORD RACCORDO	VERSCHRAUBUNG RACOR
8	3019395X1	7	**1**	O RING	JOINT TORIQUE ANELLO OR	O−RING JUNTA TORICA
9	3778767M1	∅ 14MM	**2**	BUSH	BAGUE BOCCOLA	BUCHSE CASQUILLO
10	3778766M1	∅ 8MM	**2**	BUSH	BAGUE BOCCOLA	BUCHSE CASQUILLO
11	3782337M2	◄► 1650MM	**1**	HYDR HOSE	FLEXIBLE TUBOFLEX IDRAUL	HYDR SCHLAUCH TUBO HIDRAULICO

1-ZG32-006-A

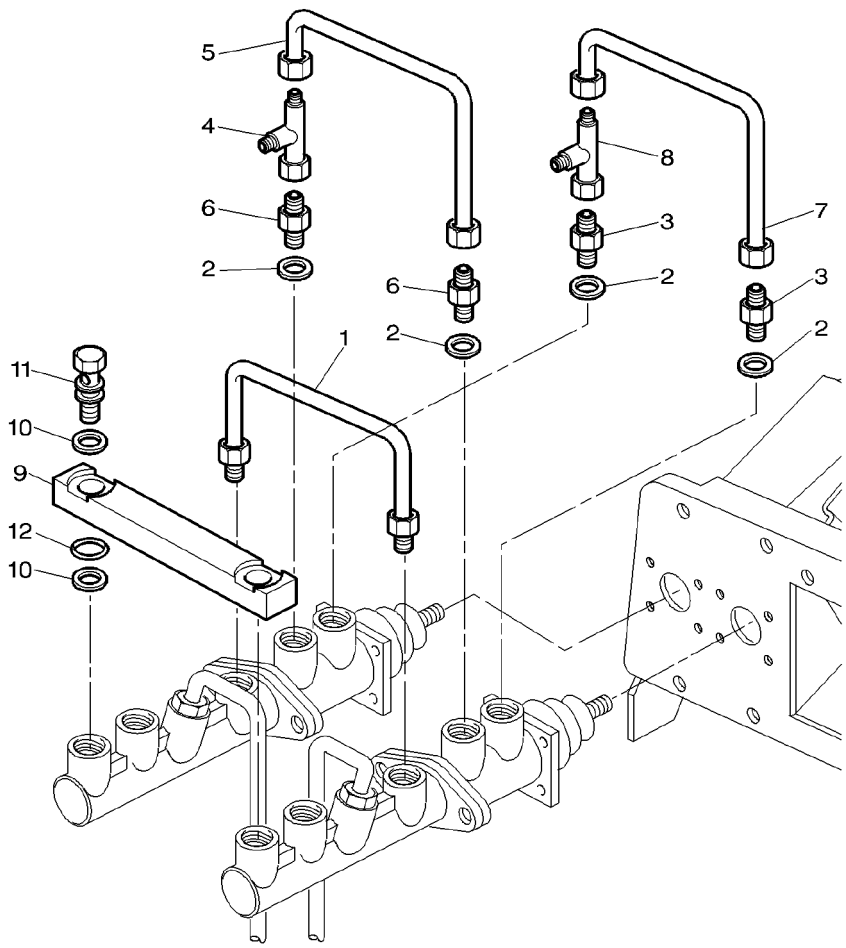

1	3386681M92	**1**	TUBE	TUBE TUBO	ROHR TUBO
2	3004861X1	**4**	WASHER	RONDELLE RONDELLA	UNTERLEGSCHEIBE ARANDELA
3	**3019574X1**	**2**	UNION	RACCORD RACCORDO	VERSCHRAUBUNG RACOR
4	364735X1	**1**	UNION	RACCORD RACCORDO	VERSCHRAUBUNG RACOR
5	3387574M91	**1**	TUBE	TUBE TUBO	ROHR TUBO
6	3019382X1	**2**	UNION	RACCORD RACCORDO	VERSCHRAUBUNG RACOR
7	3386678M91	**1**	TUBE	TUBE TUBO	ROHR TUBO
8	377218X1	**1**	TEEPIECE	TE RACCORDO A T	T−STUECK PIEZA EN T
9	3581463M2	**1**	BAR	BARRE BARRA	STAB BARRA
10	3581464M1	**4**	BUSH	BAGUE BOCCOLA	BUCHSE CASQUILLO
11	3581491M1	**2**	BANJO BOLT	VIS BANJO BULLONE BANJO	HOHLSCHRAUBE TORNILLO DIFER
12	3019395X1	**2**	O RING	JOINT TORIQUE ANELLO OR	O−RING JUNTA TORICA

Brakes **Freins** **Bremsen** **Freni** **Frenos**	**Assisted− Pipes And Fitting** **Assiste − Tuyauteries Et Montage** **Servo − Leitungen Und Anschluesse** **Servo − Tubos Idraul. E Montaggio** **Assistados − Tuberias Y Accesorio**	**70-215**	**Assisted − With Trailor Brakes** **Assiste − Avec Freinage De Remorque** **Assisteenkhilf − Mit Anhaenger Bremsen** **Servo − Con Freno Per Rimorchio** **Assistados − Con Freno De Remolque**

1-ZP78-019-A

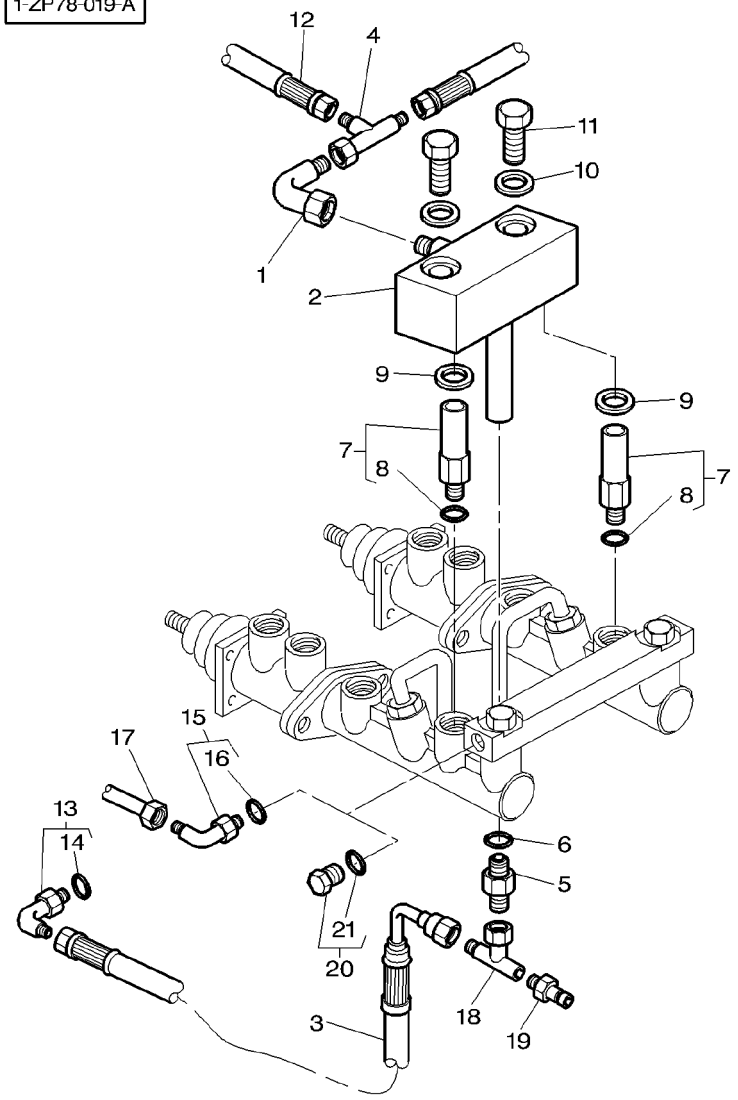

1	364603X1		
2	3778712M93		
3	3782337M2	◀▶	1650MM
4	3791175M92		
5	3617226M1		
6	3019395X1		
7	3778718M92		
8	3019395X1	7	
9	3778767M1	∅	14MM
10	3778766M1	∅	8MM
11	339123X1		M8
12	3781572M1		
13	3019418X91		M18
14	3019398X1	13	
15	3019694X91		
16	3019395X1	15	
17	3778045M2		
18	3780180M1		
19	***3384387M1***		
20	3019639X91		[A]
21	3019395X1	20	

[A] WITH PNEUMATIC BRAKE
AVEC FREINAGE PNEUMATIQUE
MIT LUFTDRUCKBREMSE
CON FRENO PNEUMATICO
CON FRENO NEUMATICO

1	ELBOW	COUDE GOMITO	WINKELSTUECK CODO
1	TANK	RESERVOIR SERBATOIO	TANK TANQUE
1	HYDR HOSE	FLEXIBLE TUBOFLEX IDRAUL	HYDR SCHLAUCH TUBO HIDRAULICO
1	UNION	RACCORD RACCORDO	VERSCHRAUBUNG RACOR
1	JET	GICLEUR GETTO	SPRITZDUESE SURTIDOR
1	O RING	JOINT TORIQUE ANELLO OR	O−RING JUNTA TORICA
2	UNION	RACCORD RACCORDO	VERSCHRAUBUNG RACOR
1	O RING	JOINT TORIQUE ANELLO OR	O−RING JUNTA TORICA
2	BUSH	BAGUE BOCCOLA	BUCHSE CASQUILLO
2	BUSH	BAGUE BOCCOLA	BUCHSE CASQUILLO
2	SCREW METRIC	VIS METRIQUE VITE METRICA	SCHRAUBE METR TORNILLO METRICO
1	HYDR HOSE	FLEXIBLE TUBOFLEX IDRAUL	HYDR SCHLAUCH TUBO HIDRAULICO
1	UNION	RACCORD RACCORDO	VERSCHRAUBUNG RACOR
1	O RING	JOINT TORIQUE ANELLO OR	O−RING JUNTA TORICA
1	UNION	RACCORD RACCORDO	VERSCHRAUBUNG RACOR
1	O RING	JOINT TORIQUE ANELLO OR	O−RING JUNTA TORICA
1	TUBING	TUBULURE TUBATURA	ROHRSTUTZEN TUBERIA
1	TEEPIECE	TE RACCORDO A T	T−STUECK PIEZA EN T
1	PRESSURE INTAKE	PRISE PRESSION PRESA PRESSIONE	ANSAUGDRUCK ENTRADA PRESION
1	PLUG	BOUCHON TAPPO	VERSCHL.STOPFEN TAPON
1	O RING	JOINT TORIQUE ANELLO OR	O−RING JUNTA TORICA

Brakes **Freins** **Bremsen** **Freni** **Frenos**	**Brake Pipes And Master Cylinder** **Tubes De Frein Et Maitre Cylindre** **Hydraulikleitung−Hauptbremszylind** **Tubazioni Freno−Cilindro Princip.** **Tubos Frenos Y Cilindro Principal**	**70-220**	**With Trailer Braking With Platforme** **Avec Freinage De Remorque Avec Plateforme** **Mit Anhaengerbremsung Mit Plattform** **Con Frenatura Di Rimorchio Con Plattaforma** **Con Frenado De Remolque Con Plataforma**

1-ZG32-007-A

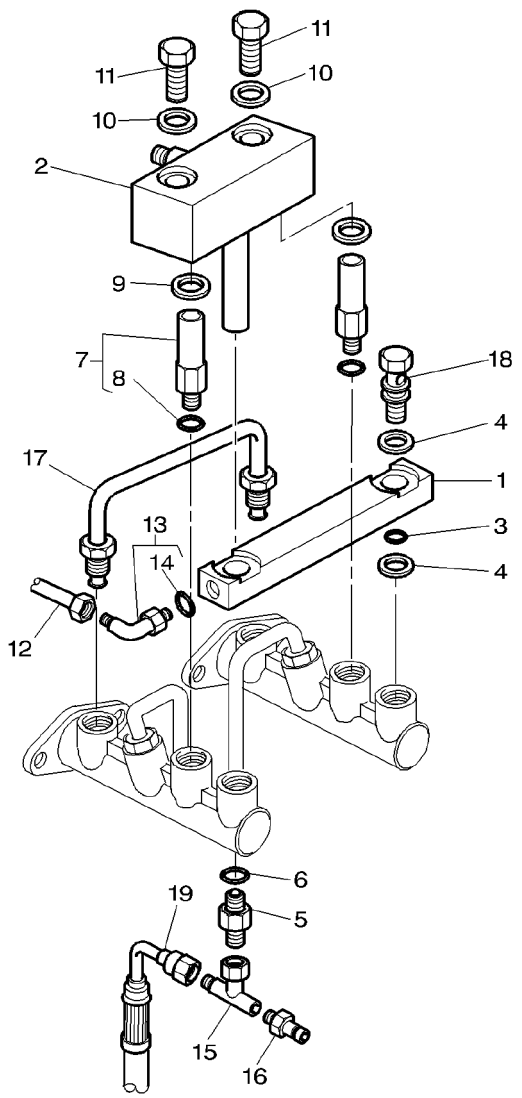

1	3581463M2			**1**	BAR	BARRE BARRA	STAB BARRA
2	3778712M93			**1**	TANK	RESERVOIR SERBATOIO	TANK TANQUE
3	3019395X1			**2**	O RING	JOINT TORIQUE ANELLO OR	O−RING JUNTA TORICA
4	3581464M1			**4**	BUSH	BAGUE BOCCOLA	BUCHSE CASQUILLO
5	3617226M1			**1**	JET	GICLEUR GETTO	SPRITZDUESE SURTIDOR
6	3019395X1			**1**	O RING	JOINT TORIQUE ANELLO OR	O−RING JUNTA TORICA
7	3778718M92			**2**	UNION	RACCORD RACCORDO	VERSCHRAUBUNG RACOR
8	3019395X1	7		**1**	O RING	JOINT TORIQUE ANELLO OR	O−RING JUNTA TORICA
9	3778767M1		∅ 14MM	**2**	BUSH	BAGUE BOCCOLA	BUCHSE CASQUILLO
10	3778766M1		∅ 8MM	**2**	BUSH	BAGUE BOCCOLA	BUCHSE CASQUILLO
11	339123X1		M8X20	**2**	SCREW METRIC	VIS METRIQUE VITE METRICA	SCHRAUBE METR TORNILLO METRICO
12	3778034M3			**1**	TUBING	TUBULURE TUBATURA	ROHRSTUTZEN TUBERIA
13	3019694X91		M14	**1**	UNION	RACCORD RACCORDO	VERSCHRAUBUNG RACOR
14	3019395X1	13		**1**	O RING	JOINT TORIQUE ANELLO OR	O−RING JUNTA TORICA
15	3780180M1			**1**	TEEPIECE	TE RACCORDO A T	T−STUECK PIEZA EN T
16	***3384387M1***			**1**	PRESSURE INTAKE	PRISE PRESSION PRESA PRESSIONE	ANSAUGDRUCK ENTRADA PRESION
17	3386681M92			**1**	TUBE	TUBE TUBO	ROHR TUBO
18	3581491M1			**2**	BANJO BOLT	VIS BANJO BULLONE BANJO	HOHLSCHRAUBE TORNILLO DIFER
19	3778665M1			**1**	HYDR HOSE	FLEXIBLE TUBOFLEX IDRAUL	HYDR SCHLAUCH TUBO HIDRAULICO

Brakes **Freins** **Bremsen** **Freni** **Frenos**	**Assisted− Pipes And Fitting** **Assiste − Tuyauteries Et Montage** **Servo − Leitungen Und Anschluesse** **Servo − Tubos Idraul. E Montaggio** **Assistados − Tuberias Y Accesorio**	**70-225**	**Without Trailer Braking Dynashift** **Sans Freinage De Remorque Dynashift** **Ohne Anhaengerbremse Dynashift** **Senza Freno Per Rimorchio Dynashift** **Sin Freno De Remolque Dynashift**

1-ZP78-009-A

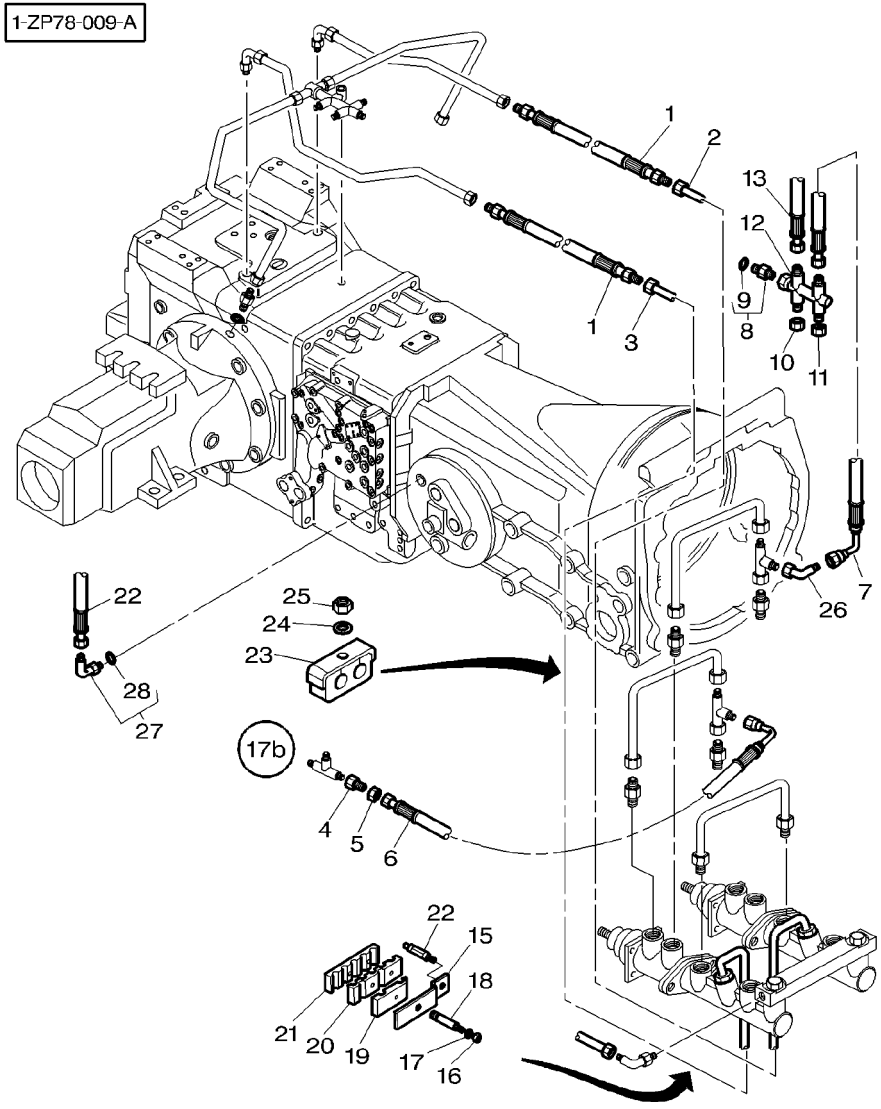

1	3778585M1		**2**	HYDR HOSE	FLEXIBLE TUBOFLEX IDRAUL	HYDR SCHLAUCH TUBO HIDRAULICO
2	3778041M3	◀	**1**	TUBE	TUBE TUBO	ROHR TUBO
2	3778031M2	[A] ◀	**1**	TUBING	TUBULURE TUBATURA	ROHRSTUTZEN TUBERIA
3	3778040M2	▶	**1**	TUBE	TUBE TUBO	ROHR TUBO
3	3778030M2	[A] ▶	**1**	TUBING	TUBULURE TUBATURA	ROHRSTUTZEN TUBERIA
4	22576X		**1**	UNION NUT	ECROU RACCORD DADO D'UNIONE	ANSCHLUSSMUTTER TUERCA UNION
5	356629X1		**1**	REDUCER	REDUCTEUR RIDUTTORE	REDUZIERSTUECK REDUCTOR
6	3386947M1		**1**	HYDR HOSE	FLEXIBLE TUBOFLEX IDRAUL	HYDR SCHLAUCH TUBO HIDRAULICO
7	3779446M1		**1**	HYDR HOSE	FLEXIBLE TUBOFLEX IDRAUL	HYDR SCHLAUCH TUBO HIDRAULICO
8	3019387X91		**1**	UNION	RACCORD RACCORDO	VERSCHRAUBUNG RACOR
9	3019398X1	8	**1**	O RING	JOINT TORIQUE ANELLO OR	O−RING JUNTA TORICA
10	356580X1		**1**	PLUG	BOUCHON TAPPO	VERSCHL.STOPFEN TAPON
11	356579X1		**1**	CAP	CHAPEAU CAPPELLO	KAPPE TAPA
12	3777412M1		**1**	UNION	RACCORD RACCORDO	VERSCHRAUBUNG RACOR
13	3779448M2		**1**	TUBE	TUBE TUBO	ROHR TUBO
14	3778279M1		**1**	STUD	GOUJON PRIGIONIERO	STEHBOLZEN ESPARRAGO
15	3778280M1		**1**	PLATE	PLAQUE PIASTRA	PLATTE PLATO
16	1441500X1	M6	**1**	LOCKNUT	ECROU BLOCAGE AUTOBLOCCANTE	FLACHMUTTER CONTRATUERCA
17	391038X1		**3**	WASHER METRIC	RONDELLE METR. RONDELLA METRICO	SCHEIBE METRISCH ARANDELA METRICO
18	3715878M3	∅ M8/M6	**1**	STUD	GOUJON PRIGIONIERO	STEHBOLZEN ESPARRAGO
19	3715882M1		**1**	BRIDLE	BRIDE BRIGLIA	SPANNBAND BRIDA
20	3715881M1		**1**	BRIDLE	BRIDE BRIGLIA	SPANNBAND BRIDA
21	3715880M1		**1**	BRIDLE	BRIDE BRIGLIA	SPANNBAND BRIDA
22	3782337M2	◀▶ 1650MM	**1**	HYDR HOSE	FLEXIBLE TUBOFLEX IDRAUL	HYDR SCHLAUCH TUBO HIDRAULICO
23	3780550M1		**2**	BRIDLE	BRIDE BRIGLIA	SPANNBAND BRIDA
24	391038X1		**2**	WASHER METRIC	RONDELLE METR. RONDELLA METRICO	SCHEIBE METRISCH ARANDELA METRICO

Brakes	Assisted− Pipes And Fitting
Freins	Assiste − Tuyauteries Et Montage
Bremsen	Servo − Leitungen Und Anschluesse
Freni	Servo − Tubos Idraul. E Montaggio
Frenos	Assistados − Tuberias Y Accesorio

70-225

Without Trailer Braking Dynashift
Sans Freinage De Remorque Dynashift
Ohne Anhaengerbremse Dynashift
Senza Freno Per Rimorchio Dynashift
Sin Freno De Remolque Dynashift

1-ZP78-009-A

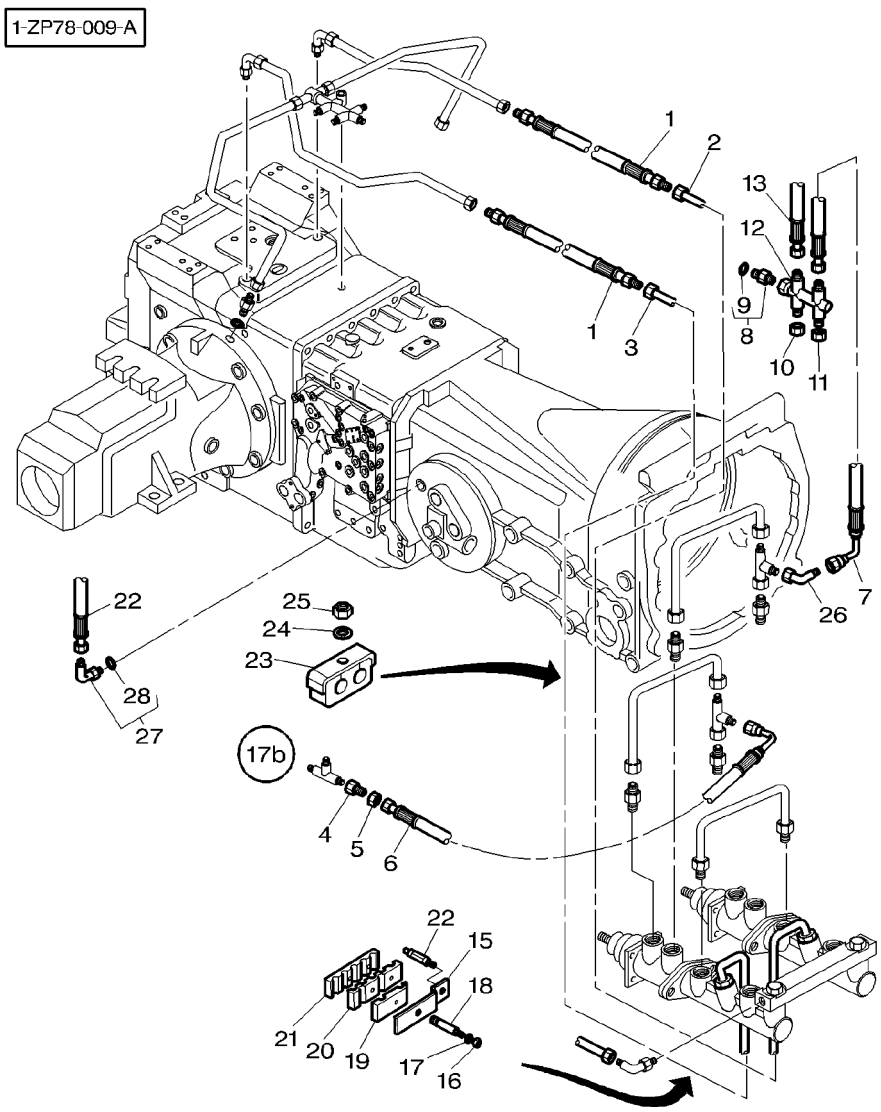

25	339030X1		**2**	NUT METRIC	ECROU METRIQUE DADO METRICO	MUTTER METRISCH TUERCA METRICO
26	365233X1		**1**	ELBOW	COUDE GOMITO	WINKELSTUECK CODO
27	3019418X91	M22	**1**	UNION	RACCORD RACCORDO	VERSCHRAUBUNG RACOR
28	3019398X1	27	**1**	O RING	JOINT TORIQUE ANELLO OR	O−RING JUNTA TORICA

[A] TRACTOR WITH PLATFORM
TRACTEUR AVEC PLATEFORME
SCHLEPPER MIT PLATTFORM
TRATTORE CON PIATTAFORMA
TRACTOR CON PLATAFORMA

Brakes Freins Bremsen Freni Frenos	Assisted− Pipes And Fitting Assiste − Tuyauteries Et Montage Servo − Leitungen Und Anschluesse Servo − Tubos Idraul. E Montaggio Assistados − Tuberias Y Accesorio	**70-230**	With Trailer Braking Dynashift Avec Freinage De Remorque Dynashift Mit Anhaengerbremsung Dynashift Con Frenatura Di Rimorchio Dynashift Con Frenado De Remolque Dynashift

1-ZP78-021-A

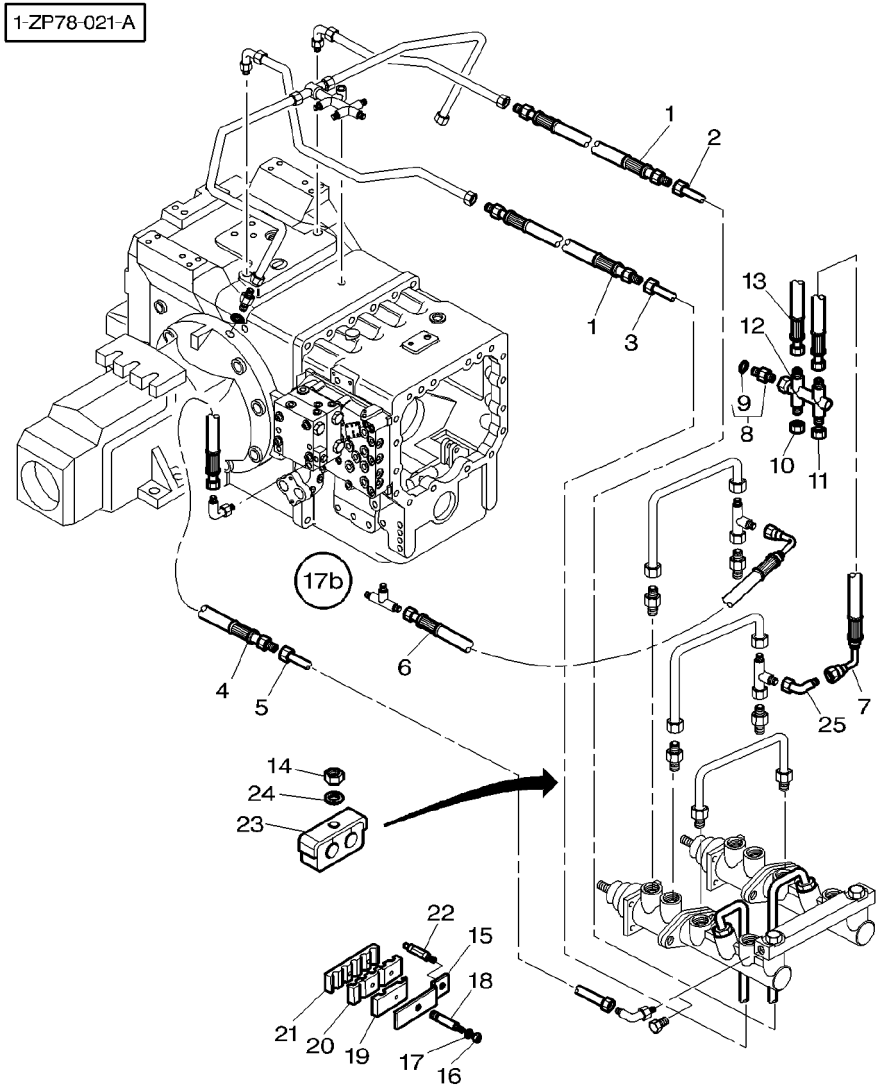

1	3778585M1		2	HYDR HOSE	FLEXIBLE TUBOFLEX IDRAUL	HYDR SCHLAUCH TUBO HIDRAULICO
2	3778043M3	◀	1	TUBE	TUBE TUBO	ROHR TUBO
2	3778033M2	[A] ◀	1	TUBING	TUBULURE TUBATURA	ROHRSTUTZEN TUBERIA
3	3778042M2	▶	1	TUBE	TUBE TUBO	ROHR TUBO
3	3778032M2	[A] ▶	1	TUBING	TUBULURE TUBATURA	ROHRSTUTZEN TUBERIA
4	3778586M2	[B] ◀▶ 950MM	1	HYDR HOSE	FLEXIBLE TUBOFLEX IDRAUL	HYDR SCHLAUCH TUBO HIDRAULICO
5	3778045M2	[B]	1	TUBING	TUBULURE TUBATURA	ROHRSTUTZEN TUBERIA
5	3778035M2	[A]	1	TUBING	TUBULURE TUBATURA	ROHRSTUTZEN TUBERIA
6	3386947M1		1	HYDR HOSE	FLEXIBLE TUBOFLEX IDRAUL	HYDR SCHLAUCH TUBO HIDRAULICO
7	3779446M1		1	HYDR HOSE	FLEXIBLE TUBOFLEX IDRAUL	HYDR SCHLAUCH TUBO HIDRAULICO
8	3019387X91		1	UNION	RACCORD RACCORDO	VERSCHRAUBUNG RACOR
9	3019398X1	8	1	O RING	JOINT TORIQUE ANELLO OR	O−RING JUNTA TORICA
10	356580X1		1	PLUG	BOUCHON TAPPO	VERSCHL.STOPFEN TAPON
11	356579X1		1	CAP	CHAPEAU CAPPELLO	KAPPE TAPA
12	3777412M1		1	UNION	RACCORD RACCORDO	VERSCHRAUBUNG RACOR
13	3779448M2		1	TUBE	TUBE TUBO	ROHR TUBO
14	339030X1		2	NUT METRIC	ECROU METRIQUE DADO METRICO	MUTTER METRISCH TUERCA METRICO
15	3778280M1		1	PLATE	PLAQUE PIASTRA	PLATTE PLATO
16	1441500X1	M6	1	LOCKNUT	ECROU BLOCAGE AUTOBLOCCANTE	FLACHMUTTER CONTRATUERCA
17	391038X1		3	WASHER METRIC	RONDELLE METR. RONDELLA METRICO	SCHEIBE METRISCH ARANDELA METRICO
18	3715878M3	∅ M8/M6	1	STUD	GOUJON PRIGIONIERO	STEHBOLZEN ESPARRAGO
19	3715882M1		1	BRIDLE	BRIDE BRIGLIA	SPANNBAND BRIDA
20	3715881M1		1	BRIDLE	BRIDE BRIGLIA	SPANNBAND BRIDA
21	3715880M1		1	BRIDLE	BRIDE BRIGLIA	SPANNBAND BRIDA
22	3778279M1		1	STUD	GOUJON PRIGIONIERO	STEHBOLZEN ESPARRAGO
23	3780550M1		2	BRIDLE	BRIDE BRIGLIA	SPANNBAND BRIDA

Brakes **Freins** **Bremsen** **Freni** **Frenos**	**Assisted− Pipes And Fitting** **Assiste − Tuyauteries Et Montage** **Servo − Leitungen Und Anschluesse** **Servo − Tubos Idraul. E Montaggio** **Assistados − Tuberias Y Accesorio**	**70-230**	**With Trailer Braking Dynashift** **Avec Freinage De Remorque Dynashift** **Mit Anhaengerbremsung Dynashift** **Con Frenatura Di Rimorchio Dynashift** **Con Frenado De Remolque Dynashift**

1-ZP78-021-A

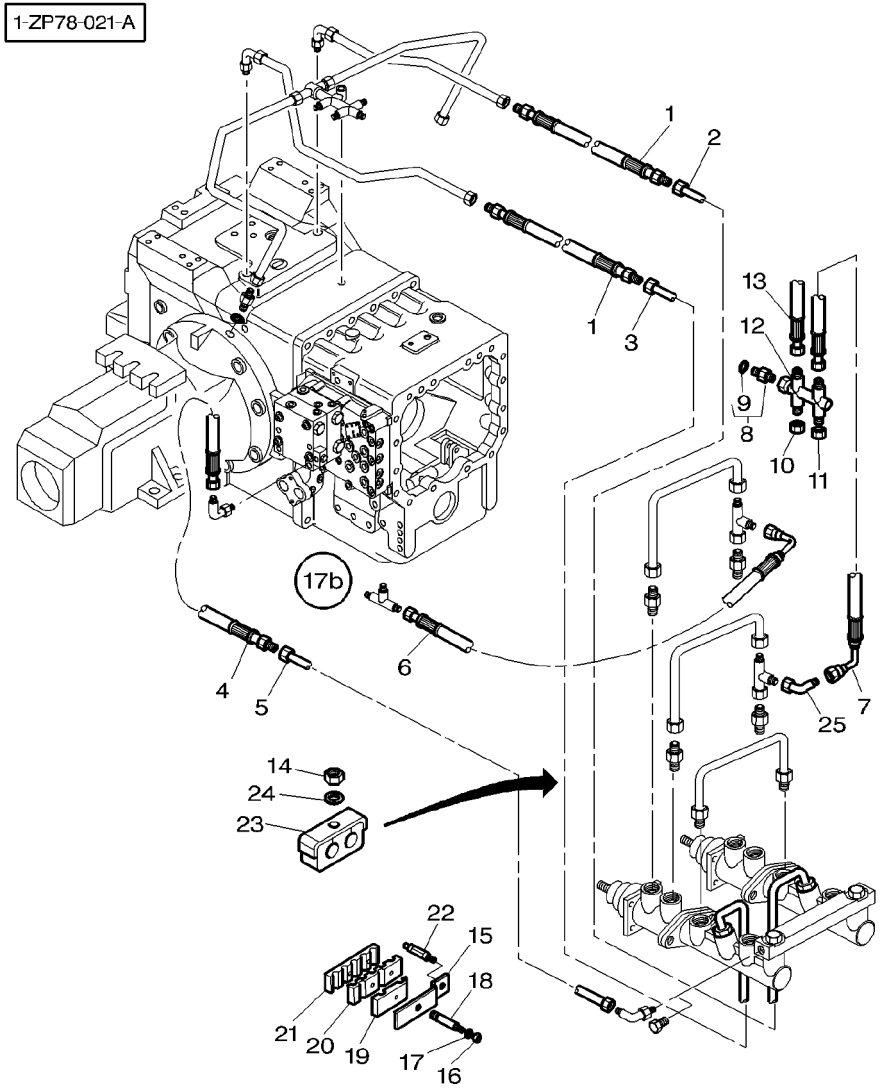

24	391038X1			
25	365233X1			
2	WASHER METRIC	RONDELLE METR. RONDELLA METRICO	SCHEIBE METRISCH ARANDELA METRICO
1	ELBOW	COUDE GOMITO	WINKELSTUECK CODO

[A] TRACTOR WITH PLATFORM
TRACTEUR AVEC PLATEFORME
SCHLEPPER MIT PLATTFORM
TRATTORE CON PIATTAFORMA
TRACTOR CON PLATAFORMA

[B] WITHOUT PNEUMATIC BRAKE
SANS FREINAGE PNEUMATIQUE
OHNE LUFTDRUCKBREMSE
SENZA FRENO PNEUMATICO
SIN FRENO NEUMATICO

1-ZG34-005-A

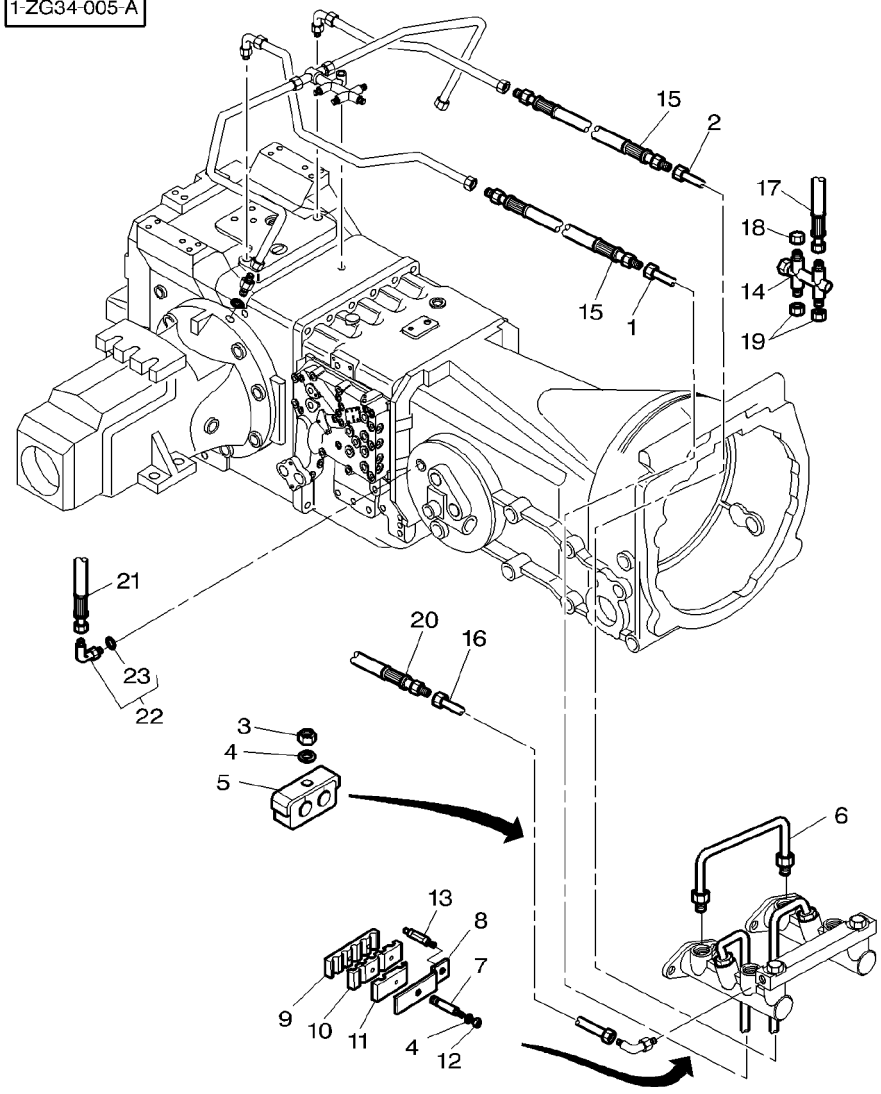

1	3778028M2	▶	1	TUBING	TUBULURE TUBATURA	ROHRSTUTZEN TUBERIA
2	3778029M2	◀	1	TUBING	TUBULURE TUBATURA	ROHRSTUTZEN TUBERIA
3	339030X1		2	NUT METRIC	ECROU METRIQUE DADO METRICO	MUTTER METRISCH TUERCA METRICO
4	391038X1		3	WASHER METRIC	RONDELLE METR. RONDELLA METRICO	SCHEIBE METRISCH ARANDELA METRICO
5	3780550M1		2	BRIDLE	BRIDE BRIGLIA	SPANNBAND BRIDA
6	3386681M92		1	TUBE	TUBE TUBO	ROHR TUBO
7	3715878M3	∅ M8/M6	1	STUD	GOUJON PRIGIONIERO	STEHBOLZEN ESPARRAGO
8	3778280M1		1	PLATE	PLAQUE PIASTRA	PLATTE PLATO
9	3715880M1		1	BRIDLE	BRIDE BRIGLIA	SPANNBAND BRIDA
10	3715881M1		1	BRIDLE	BRIDE BRIGLIA	SPANNBAND BRIDA
11	3715882M1		1	BRIDLE	BRIDE BRIGLIA	SPANNBAND BRIDA
12	1441500X1	M6	1	LOCKNUT	ECROU BLOCAGE AUTOBLOCCANTE	FLACHMUTTER CONTRATUERCA
13	3778279M1	M8	1	STUD	GOUJON PRIGIONIERO	STEHBOLZEN ESPARRAGO
14	3777412M1		1	UNION	RACCORD RACCORDO	VERSCHRAUBUNG RACOR
15	3778585M1		2	HYDR HOSE	FLEXIBLE TUBOFLEX IDRAUL	HYDR SCHLAUCH TUBO HIDRAULICO
16	3778034M3		1	TUBING	TUBULURE TUBATURA	ROHRSTUTZEN TUBERIA
17	3782425M1		1	TUBE	TUBE TUBO	ROHR TUBO
18	22833X		1	CAP	CHAPEAU CAPPELLO	KAPPE TAPA
19	70923737		2	PLUG	BOUCHON TAPPO	VERSCHL.STOPFEN TAPON
20	3778586M2	◀▶ 950MM	1	HYDR HOSE	FLEXIBLE TUBOFLEX IDRAUL	HYDR SCHLAUCH TUBO HIDRAULICO
21	3778665M1		1	HYDR HOSE	FLEXIBLE TUBOFLEX IDRAUL	HYDR SCHLAUCH TUBO HIDRAULICO
22	3019418X91		1	UNION	RACCORD RACCORDO	VERSCHRAUBUNG RACOR
23	3019398X1	22	1	O RING	JOINT TORIQUE ANELLO OR	O−RING JUNTA TORICA

Brakes **Freins** **Bremsen** **Freni** **Frenos**	**Assisted− Pipes And Fitting** **Assiste − Tuyauteries Et Montage** **Servo − Leitungen Und Anschluesse** **Servo − Tubos Idraul. E Montaggio** **Assistados − Tuberias Y Accesorio**	**70-240**	**With Full Powershift − Without Trailer Braking** **Avec Full Powershift − Sans Freinage De Remorque** **Mit Full Powershift − Ohne Anhaengerbremse** **Con Full Powershift − Senza Freno Per Rimorchio** **Con Full Powershift − Sin Freno De Remolque**

1-ZP78-013-A

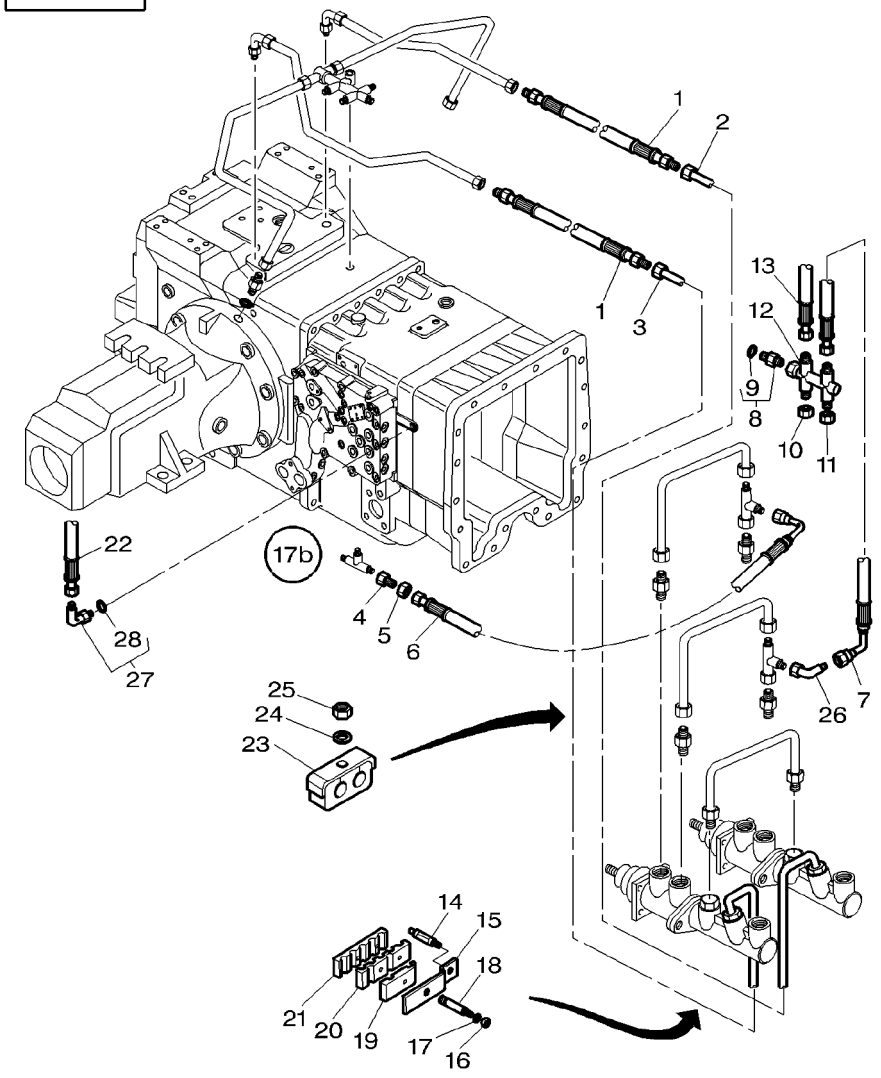

1	3778585M1			2	HYDR HOSE	FLEXIBLE TUBOFLEX IDRAUL	HYDR SCHLAUCH TUBO HIDRAULICO
2	3778041M3	◀		1	TUBE	TUBE TUBO	ROHR TUBO
3	3778040M2	▶		1	TUBE	TUBE TUBO	ROHR TUBO
4	22576X			1	UNION NUT	ECROU RACCORD DADO D'UNIONE	ANSCHLUSSMUTTER TUERCA UNION
5	356629X1			1	REDUCER	REDUCTEUR RIDUTTORE	REDUZIERSTUECK REDUCTOR
6	3778664M2	◀▶	1800MM	1	HYDR HOSE	FLEXIBLE TUBOFLEX IDRAUL	HYDR SCHLAUCH TUBO HIDRAULICO
7	3778663M1	◀▶	1600MM	1	HYDR HOSE	FLEXIBLE TUBOFLEX IDRAUL	HYDR SCHLAUCH TUBO HIDRAULICO
8	3019387X91			1	UNION	RACCORD RACCORDO	VERSCHRAUBUNG RACOR
9	3019398X1	8		1	O RING	JOINT TORIQUE ANELLO OR	O−RING JUNTA TORICA
10	356580X1			1	PLUG	BOUCHON TAPPO	VERSCHL.STOPFEN TAPON
11	356579X1			1	CAP	CHAPEAU CAPPELLO	KAPPE TAPA
12	3777412M1			1	UNION	RACCORD RACCORDO	VERSCHRAUBUNG RACOR
13	3779448M2			1	TUBE	TUBE TUBO	ROHR TUBO
14	3778279M1			1	STUD	GOUJON PRIGIONIERO	STEHBOLZEN ESPARRAGO
15	3778280M1			1	PLATE	PLAQUE PIASTRA	PLATTE PLATO
16	1441500X1	M6		1	LOCKNUT	ECROU BLOCAGE AUTOBLOCCANTE	FLACHMUTTER CONTRATUERCA
17	391038X1			3	WASHER METRIC	RONDELLE METR. RONDELLA METRICO	SCHEIBE METRISCH ARANDELA METRICO
18	3715878M3	∅	M8/M6	1	STUD	GOUJON PRIGIONIERO	STEHBOLZEN ESPARRAGO
19	3715882M1			1	BRIDLE	BRIDE BRIGLIA	SPANNBAND BRIDA
20	3715881M1			1	BRIDLE	BRIDE BRIGLIA	SPANNBAND BRIDA
21	3715880M1			1	BRIDLE	BRIDE BRIGLIA	SPANNBAND BRIDA
22	3782337M2	◀▶	1650MM	1	HYDR HOSE	FLEXIBLE TUBOFLEX IDRAUL	HYDR SCHLAUCH TUBO HIDRAULICO
23	3780550M1			2	BRIDLE	BRIDE BRIGLIA	SPANNBAND BRIDA
24	391038X1			2	WASHER METRIC	RONDELLE METR. RONDELLA METRICO	SCHEIBE METRISCH ARANDELA METRICO
25	339030X1			2	NUT METRIC	ECROU METRIQUE DADO METRICO	MUTTER METRISCH TUERCA METRICO
26	365233X1			1	ELBOW	COUDE GOMITO	WINKELSTUECK CODO

Brakes **Freins** **Bremsen** **Freni** **Frenos**	**Assisted− Pipes And Fitting** **Assiste − Tuyauteries Et Montage** **Servo − Leitungen Und Anschluesse** **Servo − Tubos Idraul. E Montaggio** **Assistados − Tuberias Y Accesorio**	**70-240**	**With Full Powershift − Without Trailer Braking** **Avec Full Powershift − Sans Freinage De Remorque** **Mit Full Powershift − Ohne Anhaengerbremse** **Con Full Powershift − Senza Freno Per Rimorchio** **Con Full Powershift − Sin Freno De Remolque**

1-ZP78-013-A

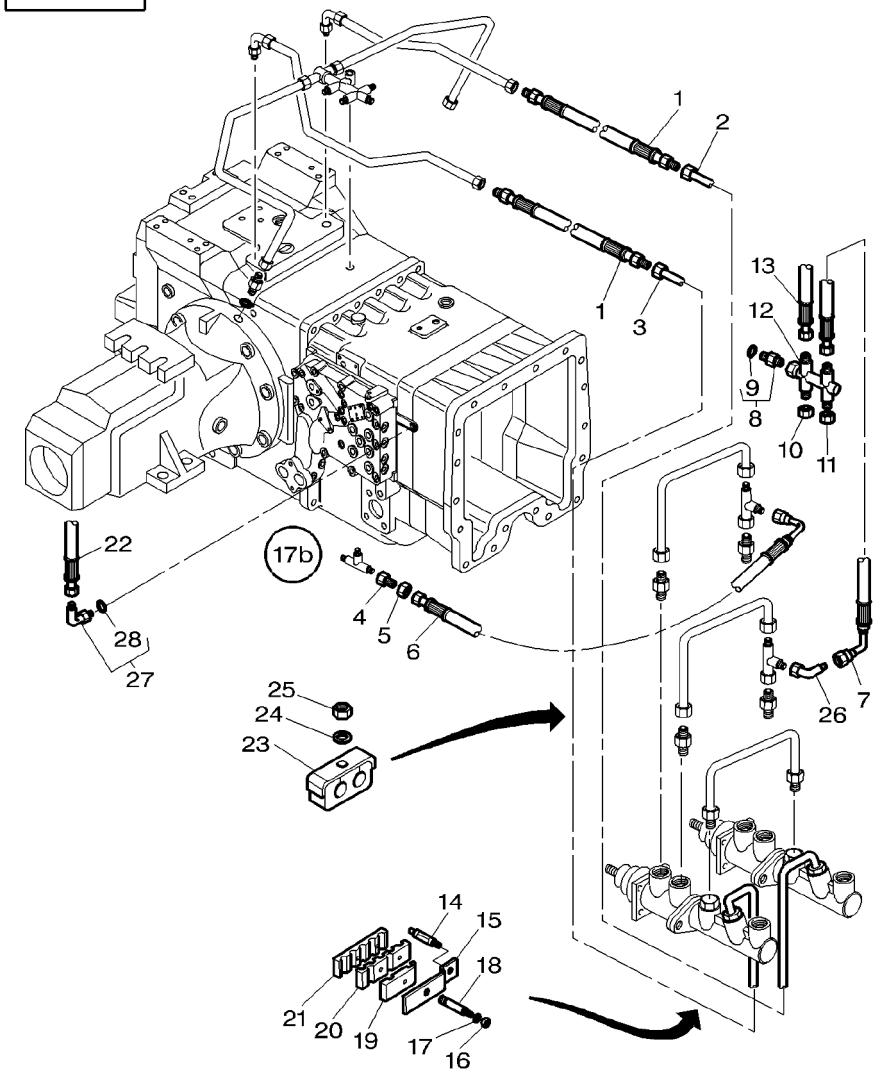

27	3019416X91	M22	**1**	ELBOW	COUDE GOMITO	WINKELSTUECK CODO
28	3019397X1	27	**1**	O RING	JOINT TORIQUE ANELLO OR	O−RING JUNTA TORICA

Brakes	Assisted− Pipes And Fitting
Freins	Assiste − Tuyauteries Et Montage
Bremsen	Servo − Leitungen Und Anschluesse
Freni	Servo − Tubos Idraul. E Montaggio
Frenos	Assistados − Tuberias Y Accesorio

70-245

With Full Powershift − With Trailer Braking
Avec Full Powershift − Avec Freinage De Remorque
Mit Full Powershift − Mit Anhaengerbremsung
Con Full Powershift −Con Frenatura Di Rimorchio
Con Full Powershift − Con Frenado De Remolque

1-ZP78-020-A

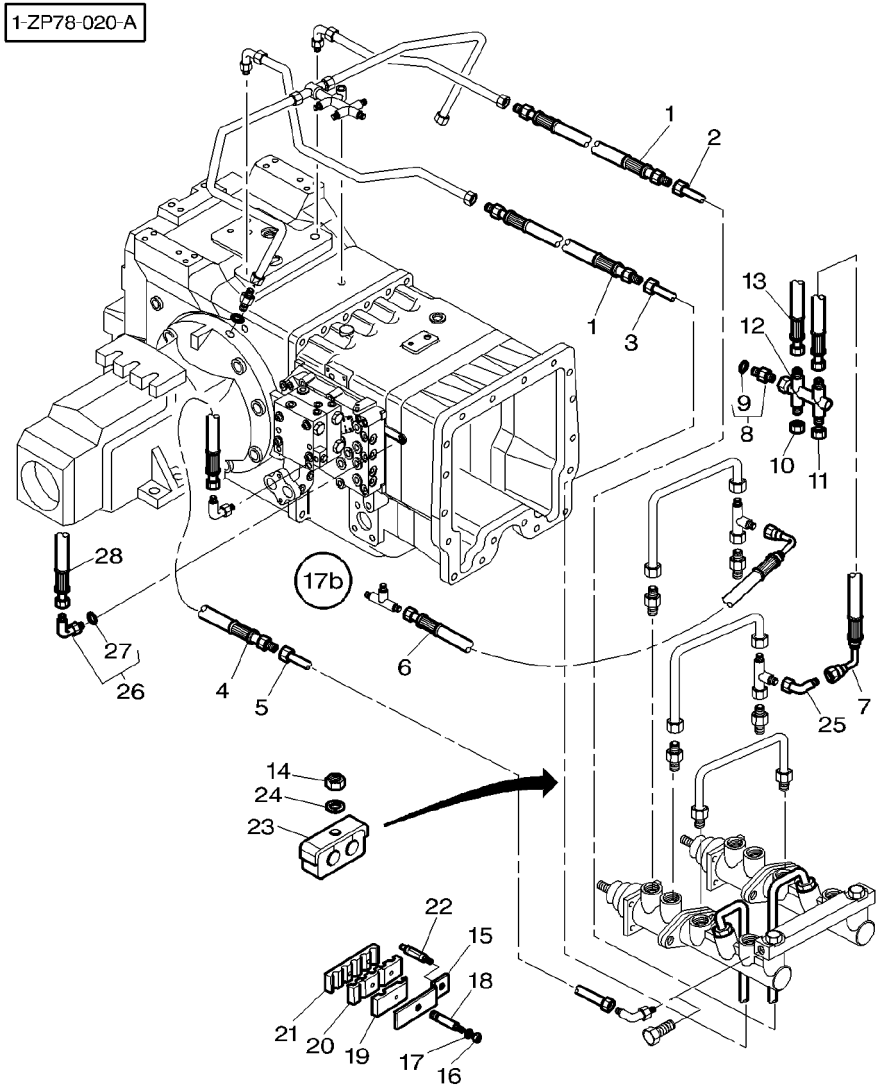

1	3778585M1			2	HYDR HOSE	FLEXIBLE TUBOFLEX IDRAUL	HYDR SCHLAUCH TUBO HIDRAULICO
2	3778043M3	◀		1	TUBE	TUBE TUBO	ROHR TUBO
3	3778042M2	▶		1	TUBE	TUBE TUBO	ROHR TUBO
4	3778586M2	[A] ◀▶	950MM	1	HYDR HOSE	FLEXIBLE TUBOFLEX IDRAUL	HYDR SCHLAUCH TUBO HIDRAULICO
5	3778045M2	[A]		1	TUBING	TUBULURE TUBATURA	ROHRSTUTZEN TUBERIA
6	3778664M2	◀▶	1800MM	1	HYDR HOSE	FLEXIBLE TUBOFLEX IDRAUL	HYDR SCHLAUCH TUBO HIDRAULICO
7	3778663M1	◀▶	1600MM	1	HYDR HOSE	FLEXIBLE TUBOFLEX IDRAUL	HYDR SCHLAUCH TUBO HIDRAULICO
8	3019387X91			1	UNION	RACCORD RACCORDO	VERSCHRAUBUNG RACOR
9	3019398X1	8		1	O RING	JOINT TORIQUE ANELLO OR	O−RING JUNTA TORICA
10	356580X1			1	PLUG	BOUCHON TAPPO	VERSCHL.STOPFEN TAPON
11	356579X1			1	CAP	CHAPEAU CAPPELLO	KAPPE TAPA
12	3777412M1			1	UNION	RACCORD RACCORDO	VERSCHRAUBUNG RACOR
13	3779448M2			1	TUBE	TUBE TUBO	ROHR TUBO
14	339030X1			2	NUT METRIC	ECROU METRIQUE DADO METRICO	MUTTER METRISCH TUERCA METRICO
15	3778280M1			1	PLATE	PLAQUE PIASTRA	PLATTE PLATO
16	1441500X1	M6		1	LOCKNUT	ECROU BLOCAGE AUTOBLOCCANTE	FLACHMUTTER CONTRATUERCA
17	391038X1			3	WASHER METRIC	RONDELLE METR. RONDELLA METRICO	SCHEIBE METRISCH ARANDELA METRICO
18	3715878M3	∅	M8/M6	1	STUD	GOUJON PRIGIONIERO	STEHBOLZEN ESPARRAGO
19	3715882M1			1	BRIDLE	BRIDE BRIGLIA	SPANNBAND BRIDA
20	3715881M1			1	BRIDLE	BRIDE BRIGLIA	SPANNBAND BRIDA
21	3715880M1			1	BRIDLE	BRIDE BRIGLIA	SPANNBAND BRIDA
22	3778279M1			1	STUD	GOUJON PRIGIONIERO	STEHBOLZEN ESPARRAGO
23	3780550M1			2	BRIDLE	BRIDE BRIGLIA	SPANNBAND BRIDA
24	391038X1			2	WASHER METRIC	RONDELLE METR. RONDELLA METRICO	SCHEIBE METRISCH ARANDELA METRICO
25	365233X1			1	ELBOW	COUDE GOMITO	WINKELSTUECK CODO
26	3019416X91			1	ELBOW	COUDE GOMITO	WINKELSTUECK CODO

Brakes **Freins** **Bremsen** **Freni** **Frenos**	**Assisted− Pipes And Fitting** **Assiste − Tuyauteries Et Montage** **Servo − Leitungen Und Anschluesse** **Servo − Tubos Idraul. E Montaggio** **Assistados − Tuberias Y Accesorio**	**70-245**	**With Full Powershift − With Trailer Braking** **Avec Full Powershift − Avec Freinage De Remorque** **Mit Full Powershift − Mit Anhaengerbremsung** **Con Full Powershift −Con Frenatura Di Rimorchio** **Con Full Powershift − Con Frenado De Remolque**

1-ZP78-020-A

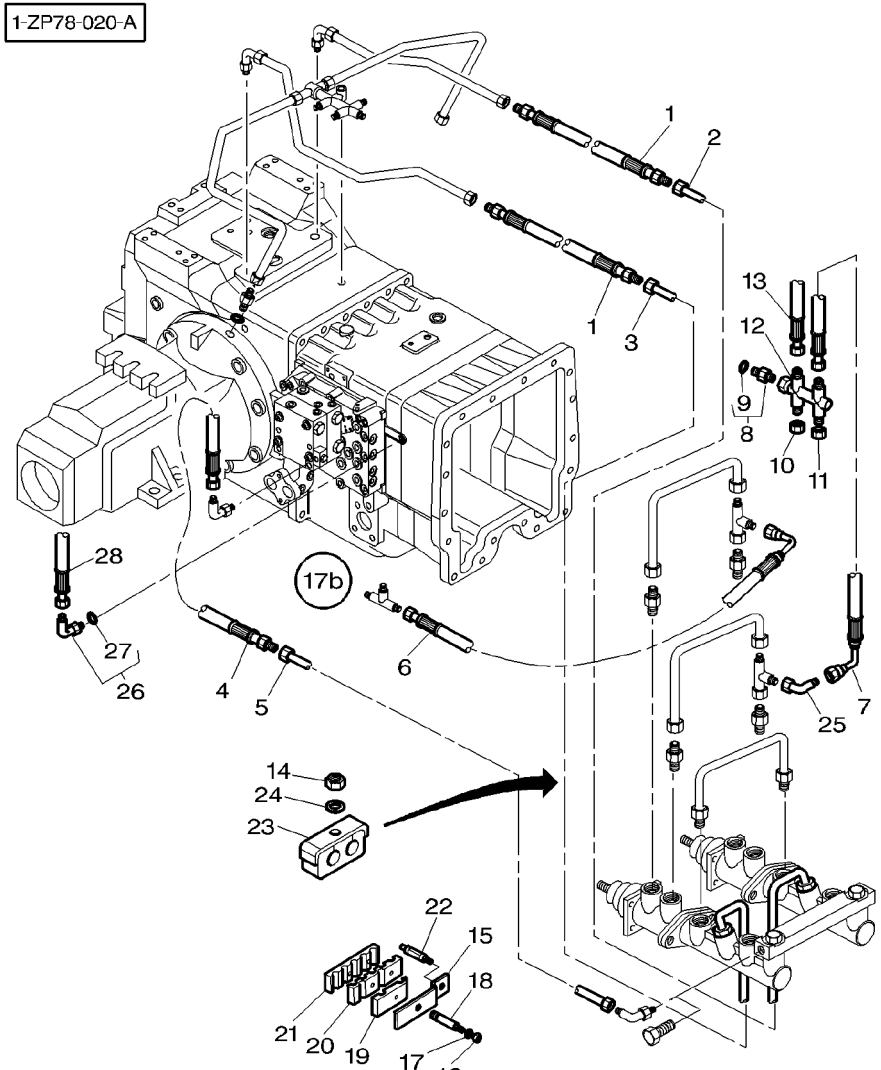

27	3019397X1	26		**1**	O RING	JOINT TORIQUE ANELLO OR FLEXIBLE TUBOFLEX IDRAUL	O−RING JUNTA TORICA HYDR SCHLAUCH TUBO HIDRAULICO
28	3782337M2	◄►	1650MM	**1**	HYDR HOSE		

[A] WITHOUT PNEUMATIC BRAKE
SANS FREINAGE PNEUMATIQUE
OHNE LUFTDRUCKBREMSE
SENZA FRENO PNEUMATICO
SIN FRENO NEUMATICO

1-ZG17-007-A

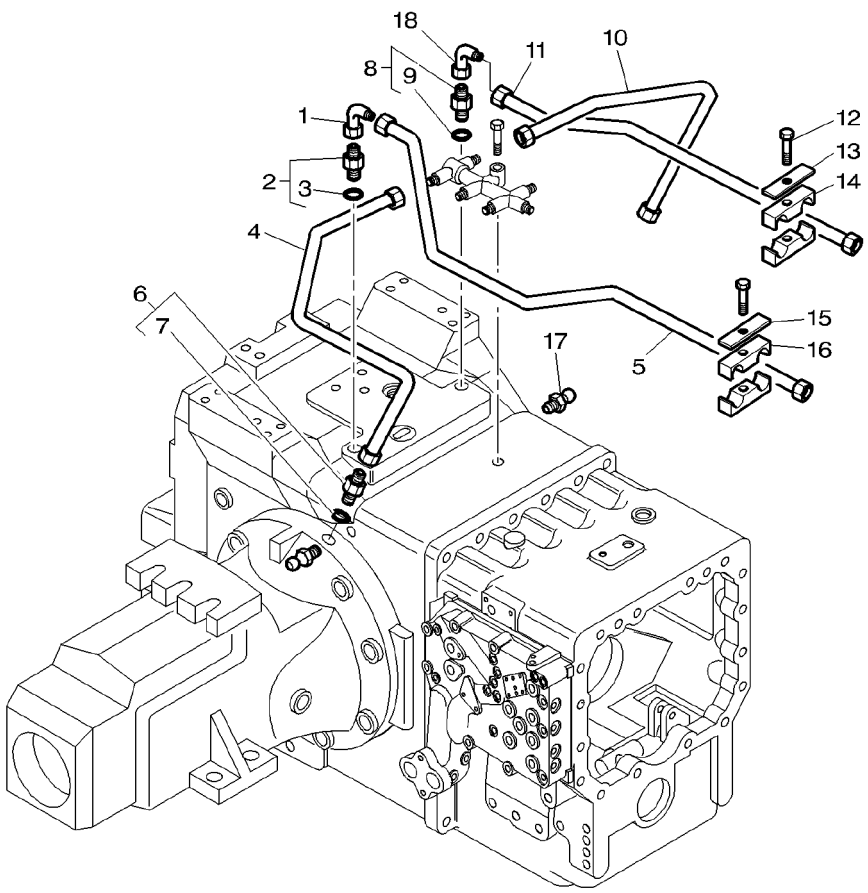

1	373778X1		**1**	UNION	RACCORD RACCORDO	VERSCHRAUBUNG RACOR
2	3019377X91		**1**	UNION	RACCORD RACCORDO	VERSCHRAUBUNG RACOR
3	3019394X1	2	**1**	O RING	JOINT TORIQUE ANELLO OR	O-RING JUNTA TORICA
4	3791200M91	▶	**1**	TUBE	TUBE TUBO	ROHR TUBO
5	3791194M91	▶	**1**	TUBE	TUBE TUBO	ROHR TUBO
6	3791486M91		**2**	UNION	RACCORD RACCORDO	VERSCHRAUBUNG RACOR
7	3019394X1	6	**1**	O RING	JOINT TORIQUE ANELLO OR	O-RING JUNTA TORICA
8	3019377X91		**1**	UNION	RACCORD RACCORDO	VERSCHRAUBUNG RACOR
9	3019394X1	8	**1**	O RING	JOINT TORIQUE ANELLO OR	O-RING JUNTA TORICA
10	3791198M91	◀	**1**	TUBE	TUBE TUBO	ROHR TUBO
11	3791196M91	◀	**1**	TUBE	TUBE TUBO	ROHR TUBO
12	339337X1	M8x30	**2**	SCREW METRIC	VIS METRIQUE VITE METRICA	SCHRAUBE METR TORNILLO METRICO
13	3716911M1		**1**	PLATE	PLAQUE PIASTRA	PLATTE PLATO
14	3716910M1		**2**	BRIDLE	BRIDE BRIGLIA	SPANNBAND BRIDA
15	3716913M1		**1**	PLATE	PLAQUE PIASTRA	PLATTE PLATO
16	3716912M1		**2**	BRIDLE	BRIDE BRIGLIA	SPANNBAND BRIDA
17	3052960M1		**2**	BANJO BOLT	VIS BANJO BULLONE BANJO	HOHLSCHRAUBE TORNILLO DIFER
18	373778X1		**1**	UNION	RACCORD RACCORDO	VERSCHRAUBUNG RACOR

1-ZG17-005-A

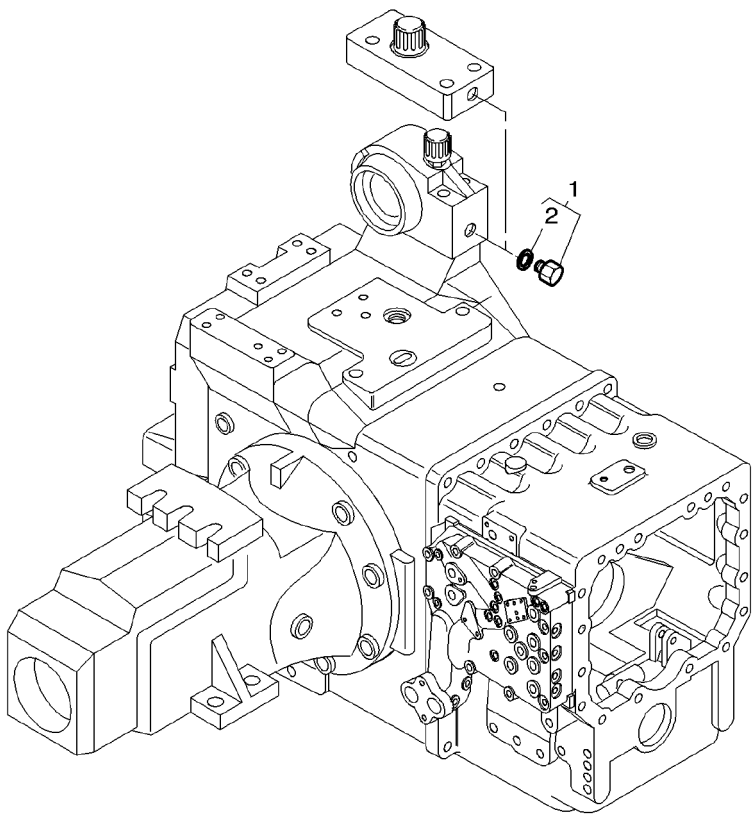

1	3019639X91		**1**	PLUG	BOUCHON TAPPO ANELLO OR	VERSCHL.STOPFEN TAPON JUNTA TORICA
2	3019395X1	1	**1**	O RING	JOINT TORIQUE	O-RING

1-ZG17-002-A

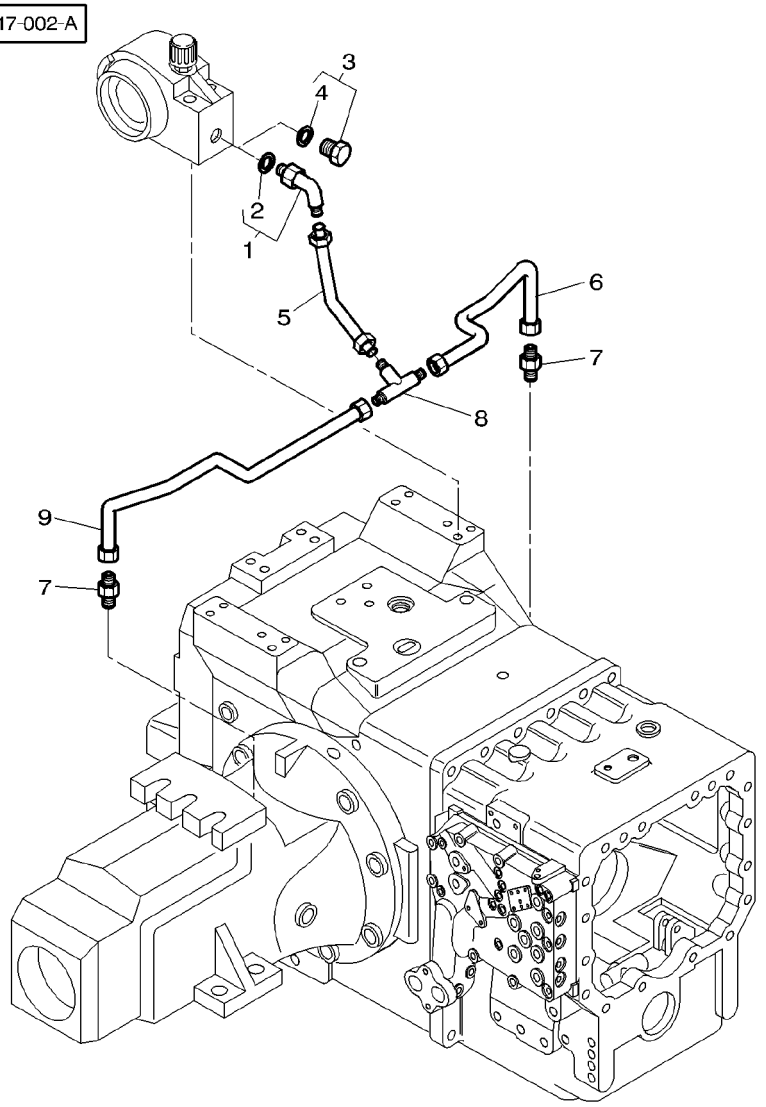

1	3019584X91		1	UNION	RACCORD RACCORDO	VERSCHRAUBUNG RACOR
2	3019395X1	1	1	O RING	JOINT TORIQUE ANELLO OR	O-RING JUNTA TORICA
3	3019639X91		1	PLUG	BOUCHON TAPPO	VERSCHL.STOPFEN TAPON
4	3019395X1	3	1	O RING	JOINT TORIQUE ANELLO OR	O-RING JUNTA TORICA
5	3791845M91		1	TUBE	TUBE TUBO	ROHR TUBO
6	3791847M91	◀	1	TUBE	TUBE TUBO	ROHR TUBO
7	354469X1		2	CONNECTOR	BORNE MORSETTO	DOPPELNIPPEL CONECTOR
8	355829X1		1	TEEPIECE	TE RACCORDO A T	T-STUECK PIEZA EN T
9	3792107M1	▶	1	TUBE	TUBE TUBO	ROHR TUBO

1-ZG17-003-A

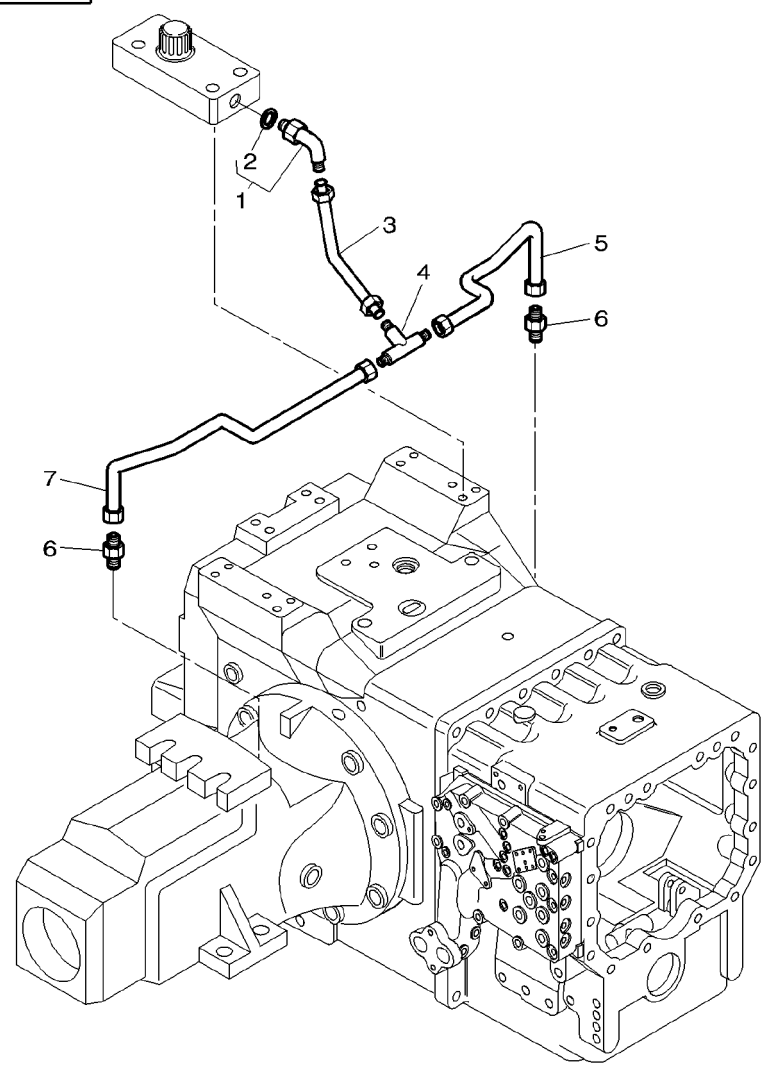

1	3019584X91		**1**	UNION	RACCORD RACCORDO	VERSCHRAUBUNG RACOR
2	3019395X1	1	**1**	O RING	JOINT TORIQUE ANELLO OR	O−RING JUNTA TORICA
3	3791697M91		**1**	TUBE	TUBE TUBO	ROHR TUBO
4	355829X1	∅ 9/16"−18	**1**	TEEPIECE	TE RACCORDO A T	T−STUECK PIEZA EN T
5	3791847M91	◀	**1**	TUBE	TUBE TUBO	ROHR TUBO
6	354469X1		**2**	CONNECTOR	BORNE MORSETTO	DOPPELNIPPEL CONECTOR
7	3792107M1	▶	**1**	TUBE	TUBE TUBO	ROHR TUBO

Hydraulic Lift Distributor
Distributeur De Relevage
Hubverteiler
Distributore Di Sollevamenta
Distribuidor De Levante

70-270

1-ZP18-001-B

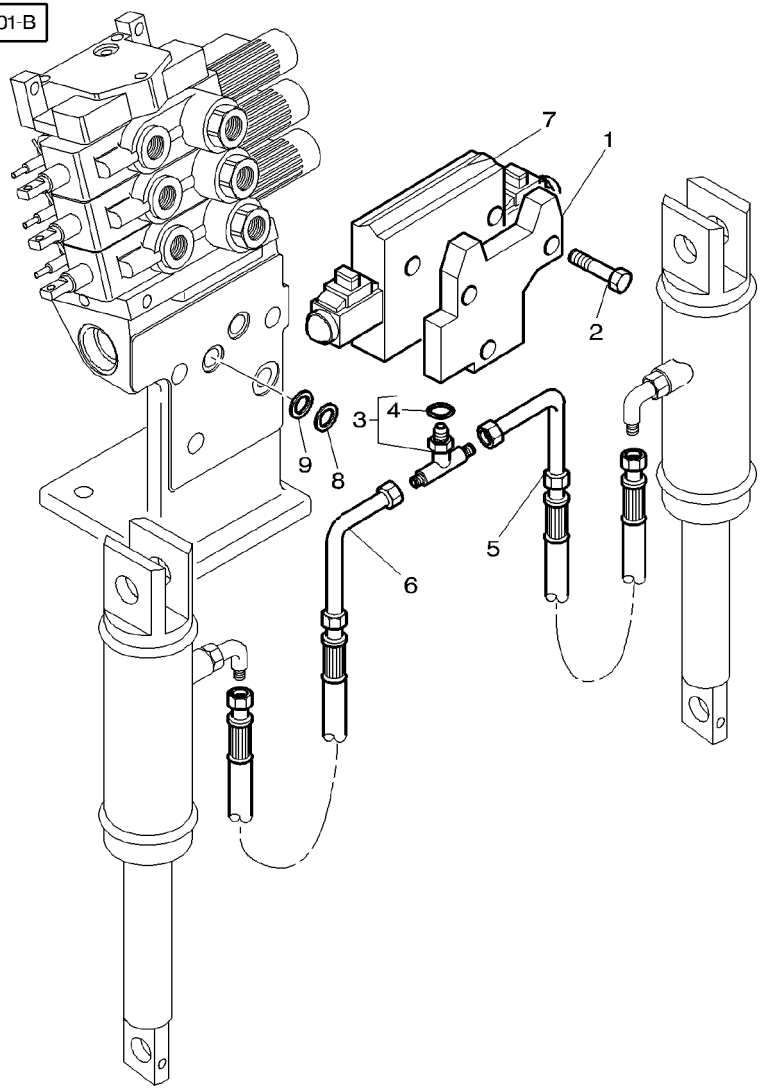

1	3716382M1		**1**	PLATE	PLAQUE PIASTRA	PLATTE PLATO
2	390246X1	M8X70	**3**	BOLT	BOULON BULLONE	MASCH.SCHRAUBE PERNO
3	3019613X91	M22	**1**	UNION	RACCORD RACCORDO	VERSCHRAUBUNG RACOR
4	3019398X1	3	**1**	O RING	JOINT TORIQUE ANELLO OR	O-RING JUNTA TORICA
5	3716383M1	▶	**1**	TUBE	TUBE TUBO	ROHR TUBO
6	3716385M1	◀	**1**	TUBE	TUBE TUBO	ROHR TUBO
7	3791418M1	90L/MN	**1**	PRESSURE VALVE	VALVE VALVOLA PRESSION	DRUCKVENTIL VALVULA PRESION
8	1442477X1		**1**	GASKET	JOINT GUARNIZIONE	DICHTSCHEIBE EMPAQUETADURA.
9	3791884M2		**1**	BUSH	BAGUE BOCCOLA	BUCHSE CASQUILLO

Hydraulic Lift Distributor
Distributeur De Relevage
Hubverteiler
Distributore Di Sollevamenta
Distribuidor De Levante

70-275

1-ZP18-002-A

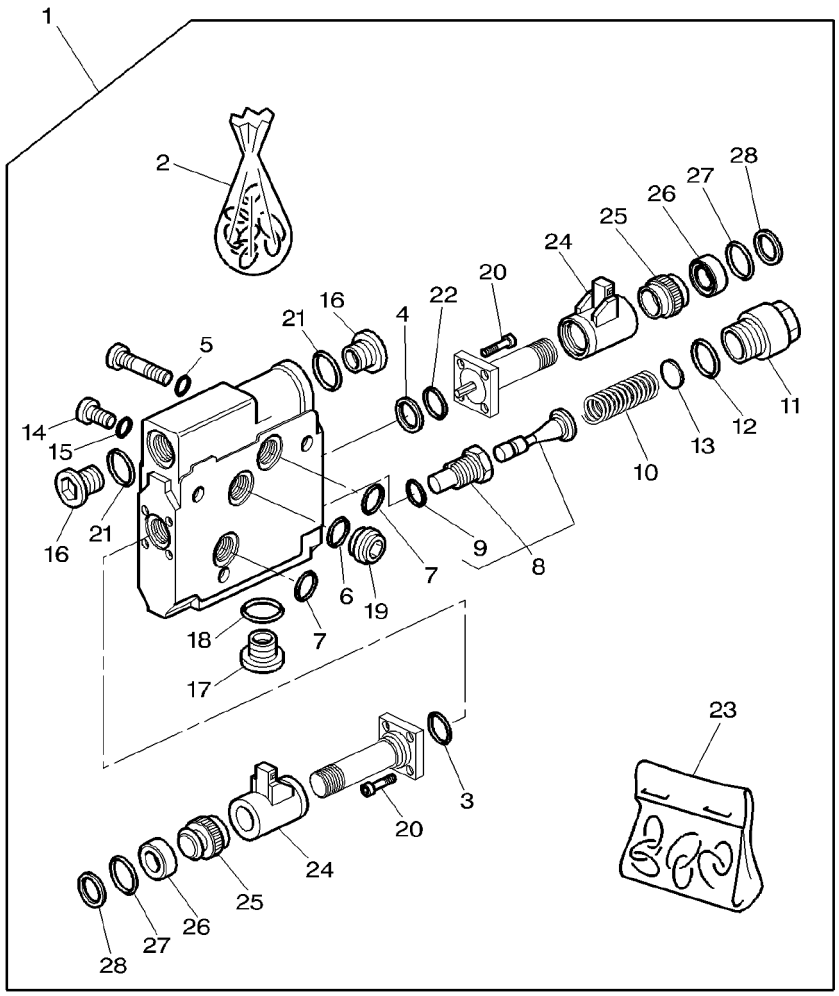

1	3791418M1	[A] BOSCH 90L/MN	**1**	PRESSURE VALVE	VALVE VALVOLA PRESSION	DRUCKVENTIL VALVULA PRESION
2	3902938M91	1	**1**	KIT, JOINT	JEU JOINTS KIT GIUNTO	DICHTUNGSSATZ JUEGO JUNTAS
3	3902933M1	2 ∅ 19X1,5MM	**1**	O RING	JOINT TORIQUE ANELLO OR	O-RING JUNTA TORICA
4	3902934M1	2	**1**	GASKET	JOINT GUARNIZIONE	DICHTSCHEIBE EMPAQUETADURA.
5	3108257M1	2 ∅ 5X1,5MM	**2**	O RING	JOINT TORIQUE ANELLO OR	O-RING JUNTA TORICA
6	3108233M1	2 ∅ 18X2,5MM	**1**	O RING	JOINT TORIQUE ANELLO OR	O-RING JUNTA TORICA
7	3108232M1	2 ∅ 20X2,5MM	**2**	O RING	JOINT TORIQUE ANELLO OR	O-RING JUNTA TORICA
8	3108258M1	1	**1**	VALVE	SOUPAPE VALVOLA	VENTIL VALVULA
9	3902935M1	2 ∅ 10,82X1,78MM	**1**	O RING	JOINT TORIQUE ANELLO OR	O-RING JUNTA TORICA
10	3104936M1	1	**1**	COMP.SPRING	RESSORT DE COMPR MOLLA COMPOSTA	DRUCKFEDER MUELLE COMPRESOR
11	3902936M1	1	**1**	PLUG	BOUCHON TAPPO	VERSCHL.STOPFEN TAPON
12		2 REF 2 ∅ 22X2,5MM	**1**	O RING	JOINT TORIQUE ANELLO OR	O-RING JUNTA TORICA
13	3104724M1	1 0,8MM	**X**	SHIM	CALE REGLAGE SPESSORE	EINSTELLBLECH CALCE
13	1806184M1	1 0,5MM	**X**	SHIM	CALE REGLAGE SPESSORE	EINSTELLBLECH CALCE
13	3102069M1	1 0,4MM	**X**	SHIM	CALE REGLAGE SPESSORE	EINSTELLBLECH CALCE
13	3102068M1	1 0,3MM	**X**	SHIM	CALE REGLAGE SPESSORE	EINSTELLBLECH CALCE
14	3102240M1	1	**1**	PLUG	BOUCHON TAPPO	VERSCHL.STOPFEN TAPON
15	3108259M1	2 ∅ 8X2MM	**1**	O RING	JOINT TORIQUE ANELLO OR	O-RING JUNTA TORICA
16	3902932M1	1	**2**	PLUG	BOUCHON TAPPO	VERSCHL.STOPFEN TAPON
17	3108244M1	1	**1**	PLUG	BOUCHON TAPPO	VERSCHL.STOPFEN TAPON
18	3108238M1	1	**1**	O RING	JOINT TORIQUE ANELLO OR	O-RING JUNTA TORICA
19	3108248M1	1	**1**	BYPASS	BYPASS BIPASSO	LECKOELLEITUNG DERIVACION
20	3902937M1	1 M4X8	**8**	SCREW	VIS VITE	SCHRAUBE TORNILLO
21		2 REF 2 ∅ 17X2,5MM	**2**	O RING	JOINT TORIQUE ANELLO OR	O-RING JUNTA TORICA
22		2 REF 2 ∅ 28X2MM	**1**	O RING	JOINT TORIQUE ANELLO OR	O-RING JUNTA TORICA

Hydraulic Lift Distributor
Distributeur De Relevage
Hubverteiler
Distributore Di Sollevamenta
Distribuidor De Levante

70-275

1-ZP18-002-A

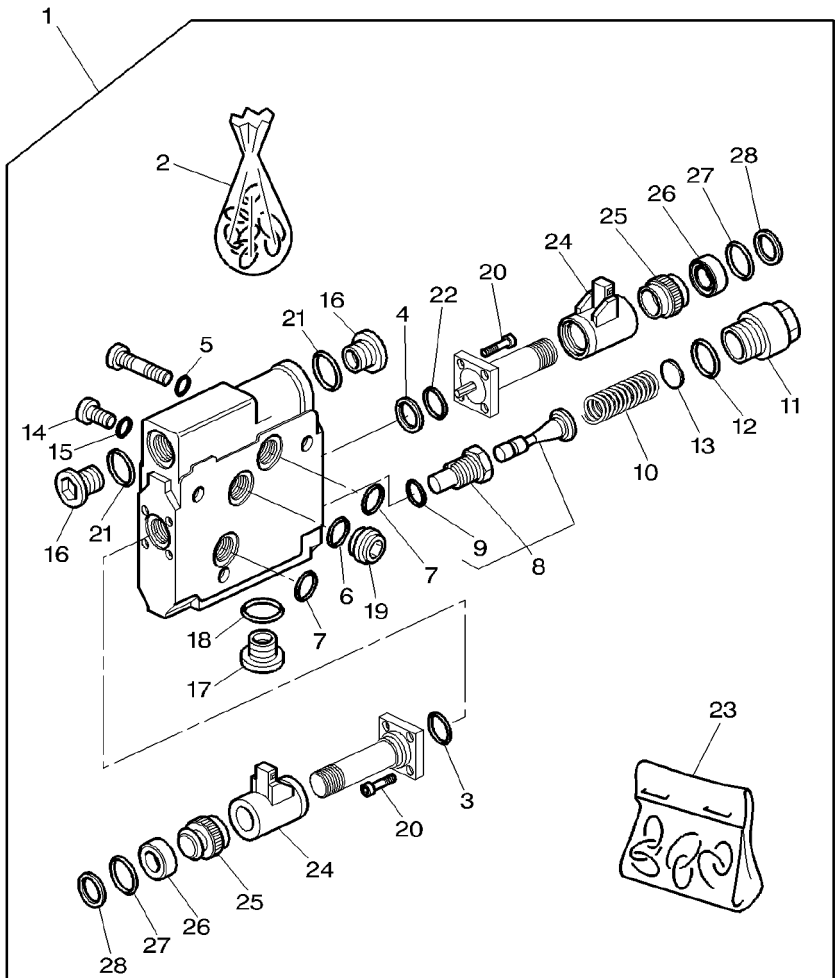

23	3902961M91	⇦⇨ 3901801M91	**2**	PARTS PACK	JEU PIECES PACCO RICAMBI	SATZ TEILE PAQUETE PIEZAS
24		23 ▰▸ REF 23	**1**	SOLENOID	SOLENOIDE SOLENOIDE	MAGNETSPULE SOLENOIDE
25		23 ▰▸ REF 23	**1**	UNION NUT	ECROU RACCORD DADO D'UNIONE	ANSCHLUSSMUTTER TUERCA UNION
26		23 ▰▸ REF 23	**1**	HELMET	CAPUCHON CASCO	SCHUTZHELM CASCO
27		23 ▰▸ REF 23 ∅ 21X1,5MM	**1**	O RING	JOINT TORIQUE ANELLO OR	O-RING JUNTA TORICA
28		23 ▰▸ REF 23 ∅ 20X2,5MM	**1**	O RING	JOINT TORIQUE ANELLO OR	O-RING JUNTA TORICA

[A] ONLY P/NS WITH ITEMS ARE SUPPLIED IN SPARE PARTS
SEULES LES PIECES REPEREES SONT FOURNIES EN RECHAN GE
NUR DIESE TEILNUMMERN SIND LIEFERBAR
SOLO LE PARTI NUMERATE SONO FORNITE A RICAMBIO
SOLO SE SUMINISTRAN COMO RECAMBIOS LAS PIEZAS MARC ADAS

Auxiliary Distributor
Distributeur Auxiliaire
Zuzatzverteiler
Distributore Auxiliarie
Distribuidor Auxiliar

70-280

2 Distributors
2 Distributeurs
2 Verteilers
2 Distributori
2 Distribuidores

1-ZP34-025-A

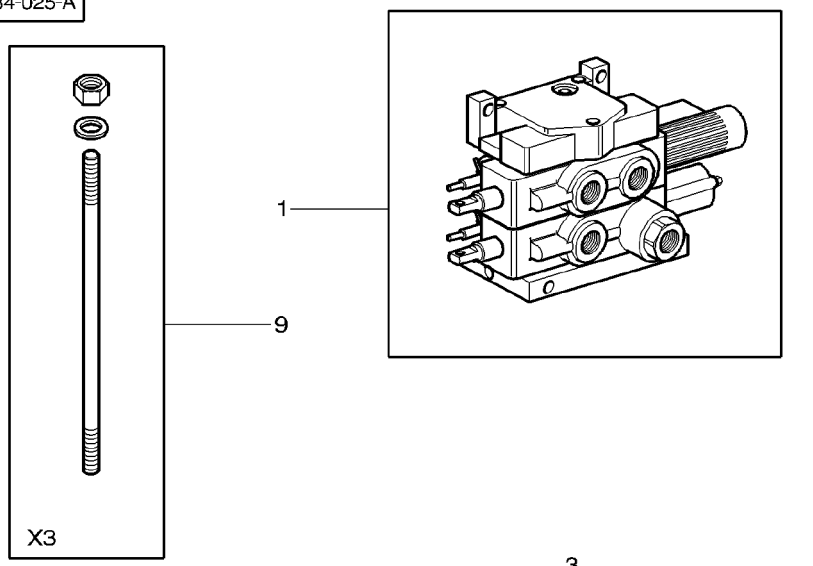

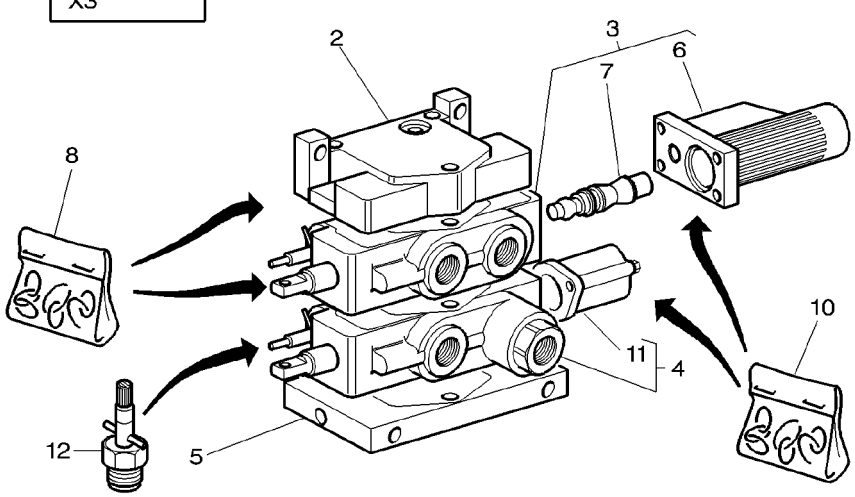

1	3716317M93		**1**	DISTRIBUTOR	DISTRIBUTEUR DISTRIBUTORE	VERTEILER DISTRIBUIDOR
2	3716316M1	1	**1**	ELEMENT	ELEMENT ELEMENTO	ELEMENT ELEMENTO
3	3792803M3	1 [A] ⇔ 3902062M92	**1**	DISTRIBUTOR	DISTRIBUTEUR DISTRIBUTORE	VERTEILER DISTRIBUIDOR
4	3792802M1	1 [B] ⇔ 3902063M91	**1**	DISTRIBUTOR	DISTRIBUTEUR DISTRIBUTORE	VERTEILER DISTRIBUIDOR
5	3716314M1	1	**1**	ELEMENT	ELEMENT ELEMENTO	ELEMENT ELEMENTO
6	3902797M91	3	**1**	PROTECTOR	PROTECTEUR PROTETTORE	SCHUTZ PROTECTOR
7	3790773M11	3	**1**	KIT, SERVICE	KIT SERVICE KIT DI SERVIZIO	WARTUNGSSATZ JEUGO,SERVICE
8	3792640M1	1 ⇔ 3902067M91	**1**	KIT, JOINT	JEU JOINTS KIT GIUNTO	DICHTUNGSSATZ JUEGO JUNTAS
9	3902732M91	1	**1**	PARTS PACK	JEU PIECES PACCO RICAMBI	SATZ TEILE PAQUETE PIEZAS
10	3902066M91	1	**1**	KIT, JOINT	JEU JOINTS KIT GIUNTO	DICHTUNGSSATZ JUEGO JUNTAS
11	3902813M91	4	**1**	PROTECTOR	PROTECTEUR PROTETTORE	SCHUTZ PROTECTOR
12	3790797M11	1	**1**	KIT, SERVICE	KIT SERVICE KIT DI SERVIZIO	WARTUNGSSATZ JEUGO,SERVICE

[A] DIST 4 FLOATING POSITIONS ,FLOW ADJUST,KICK−OUT,W/ O, ZERO LEAK
DIST 4 POS. FLOTTANTES,REGLAGE DE DEBIT,KICK−OUT, SANS ZERO DE FUITE
VERTEILER 4 DURCH.POSITONEN,DURFLUSS EINSTELLUNG,K ICK OUT,OHNE NULLECKAGE
DIST A 4 POSIZIONI FLOTTANTI,REGOLATORE DI FLUSSO, RIBALTATOE,SIN ZERO FUGA
DIST A 4 POSICION FLOTANTE,DEBITO REGULABLE,RIBALT ORE,SENZA ZERO FUGA

[B] DIST 3 FLOATING POSITIONS,RETURN BY SPRING,FLOW AD JUST,ZERO LEAK
DIST 3 POSITIONS FLOTTANTES,RAPPEL PAR RESSORT,REG LAGE DE DEBIT,FUITE ZERO
VERTEILER 3 DURCH.POSITONEN,EINFACH WIRHEND,DURFLU SS EINSTELLUNG,FUR NULLE CAGE
DIST A 3 POSIZIONI FLOTTANTI,REGOLATORE DI FLUSSO, MOLLA DI RICHIAMO,ZERO FUGA
DIST A 3 POSICION FLOTANTE,DEBITO REGULABLE,ZERO FUGA,RESORTE DE RETRACCION

1-ZP36-014-B

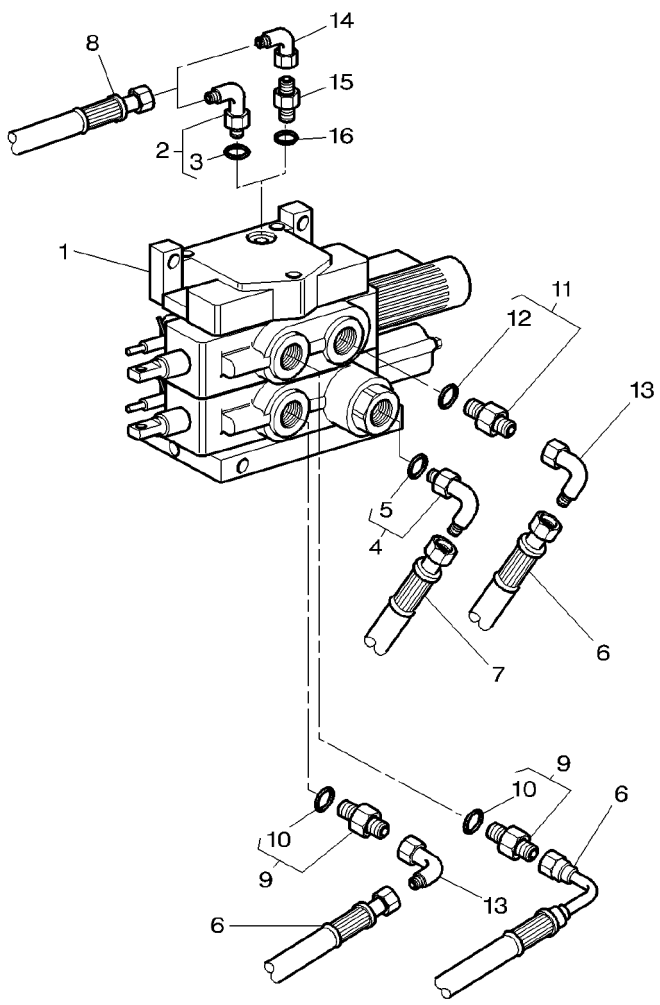

1	3716317M93			**1**	DISTRIBUTOR	DISTRIBUTEUR DISTRIBUTORE VERTEILER DISTRIBUIDOR
2	**357197X91**	➡	H321001	**1**	ELBOW	COUDE GOMITO WINKELSTUECK CODO
3	831452M1	2		**1**	O RING	JOINT TORIQUE ANELLO OR O−RING JUNTA TORICA
4	380031X91			**1**	UNION	RACCORD RACCORDO VERSCHRAUBUNG RACOR
5	1882958M1	4		**1**	O RING	JOINT TORIQUE ANELLO OR O−RING JUNTA TORICA
6	3712540M1	◀▶	650MM	**3**	HYDR HOSE	FLEXIBLE TUBOFLEX IDRAUL HYDR SCHLAUCH TUBO HIDRAULICO
7	3714956M1	◀▶	600MM	**1**	HYDR HOSE	FLEXIBLE TUBOFLEX IDRAUL HYDR SCHLAUCH TUBO HIDRAULICO
8	3716398M1	[A]		**1**	HYDR HOSE	FLEXIBLE TUBOFLEX IDRAUL HYDR SCHLAUCH TUBO HIDRAULICO
8	3792042M1	[B]	◀▶ 1400MM	**1**	HYDR HOSE	FLEXIBLE TUBOFLEX IDRAUL HYDR SCHLAUCH TUBO HIDRAULICO
9	835013M91			**2**	UNION	RACCORD RACCORDO VERSCHRAUBUNG RACOR
10	1882958M1	9		**1**	O RING	JOINT TORIQUE ANELLO OR O−RING JUNTA TORICA
11	380055X91			**1**	UNION	RACCORD RACCORDO VERSCHRAUBUNG RACOR
12	835024M1	11		**1**	O RING	JOINT TORIQUE ANELLO OR O−RING JUNTA TORICA
13	**367386X1**			**2**	ELBOW	COUDE GOMITO WINKELSTUECK CODO
14	364603X1	➡	H321002	**1**	ELBOW	COUDE GOMITO WINKELSTUECK CODO
15	358733X1	➡	H321002	**1**	UNION	RACCORD RACCORDO VERSCHRAUBUNG RACOR
16	831452M1			**1**	O RING	JOINT TORIQUE ANELLO OR O−RING JUNTA TORICA

[A] WITH PUMP 45CC
AVEC POMPE 45CC
MIT PUMPE 45CC
CON POMPA 45CC
CON BOMBA 45CC

[B] WITH PUMP 60CC
AVEC POMPE 60CC
MIT PUMPE 60CC
CON POMPA 60CC
CON BOMBA 60CC

Auxiliary Distributor
Distributeur Auxiliaire
Zuzatzverteiler
Distributore Auxiliarie
Distribuidor Auxiliar

70-290

3 Distributors
3 Distributeurs
3 Verteilers
3 Distributori
3 Distribuidores

1-ZP34-016-A

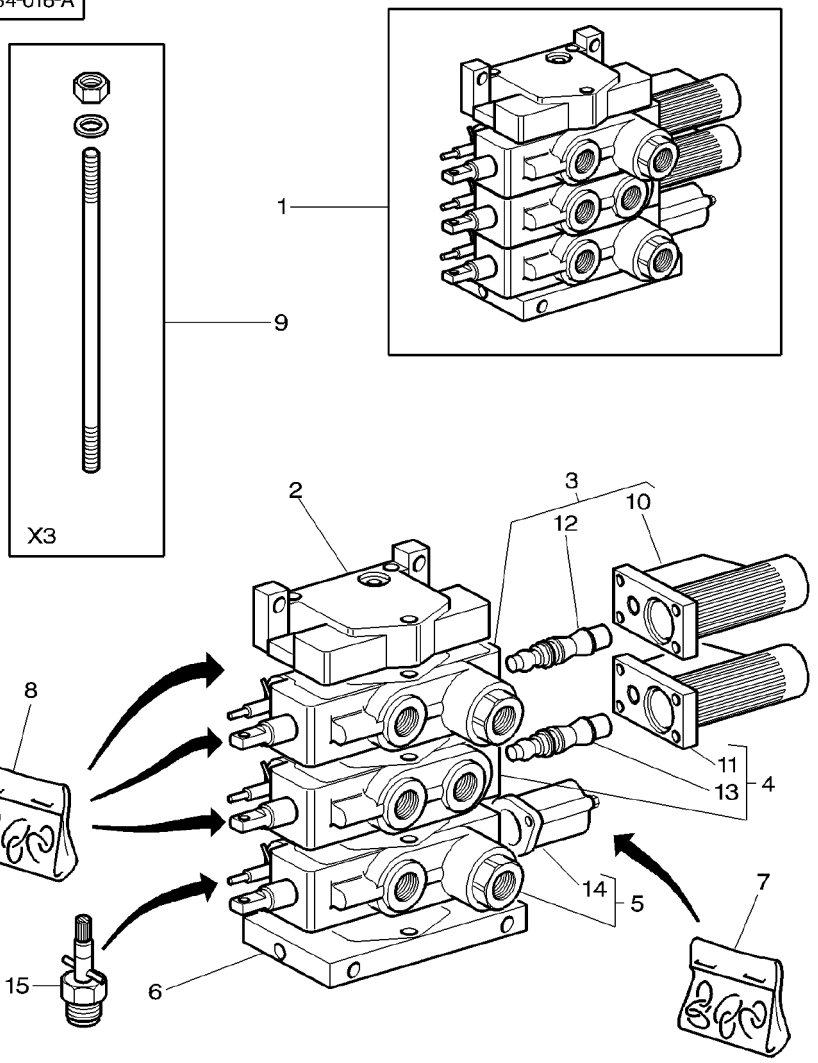

1	3716318M93		**1**	DISTRIBUTOR	DISTRIBUTEUR DISTRIBUTORE	VERTEILER DISTRIBUIDOR
2	3716316M1	1	**1**	ELEMENT	ELEMENT ELEMENTO	ELEMENT ELEMENTO
3	3713928M5	1 [C]	**1**	DISTRIBUTOR	DISTRIBUTEUR DISTRIBUTORE	VERTEILER DISTRIBUIDOR
4	3792803M3	1 [A] ⇔ 3902062M9	**1**	DISTRIBUTOR	DISTRIBUTEUR DISTRIBUTORE	VERTEILER DISTRIBUIDOR
5	3792802M1	1 [B] ⇔ 3902063M91	**1**	DISTRIBUTOR	DISTRIBUTEUR DISTRIBUTORE	VERTEILER DISTRIBUIDOR
6	3716314M1	1	**1**	ELEMENT	ELEMENT ELEMENTO	ELEMENT ELEMENTO
7	3902066M91	1	**1**	KIT, JOINT	JEU JOINTS KIT GIUNTO	DICHTUNGSSATZ JUEGO JUNTAS
8	3792640M1	1 ⇔ 3902067M91	**1**	KIT, JOINT	JEU JOINTS KIT GIUNTO	DICHTUNGSSATZ JUEGO JUNTAS
9	3716366M1	1	**1**	PARTS PACK	JEU PIECES PACCO RICAMBI	SATZ TEILE PAQUETE PIEZAS
10	3902797M91	3	**1**	PROTECTOR	PROTECTEUR PROTETTORE	SCHUTZ PROTECTOR
11	3902797M91	4	**1**	PROTECTEUR	PROTECTEUR PROTETTORE	SCHUTZ PROTECTOR
12	3790773M11	3	**1**	KIT, SERVICE	KIT SERVICE KIT DI SERVIZIO	WARTUNGSSATZ JEUGO,SERVICE
13	3790773M11	4	**1**	KIT, SERVICE	KIT SERVICE KIT DI SERVIZIO	WARTUNGSSATZ JEUGO,SERVICE
14	3902813M91	5	**1**	PROTECTOR	PROTECTEUR PROTETTORE	SCHUTZ PROTECTOR
15	3790797M11	1	**1**	KIT, SERVICE	KIT SERVICE KIT DI SERVIZIO	WARTUNGSSATZ JEUGO,SERVICE

[A] DIST 4 FLOATING POSITIONS ,FLOW ADJUST,KICK−OUT,W/ O, ZERO LEAK
DIST 4 POS. FLOTTANTES,REGLAGE DE DEBIT,KICK−OUT, SANS ZERO DE FUITE
VERTEILER 4 DURCH.POSITONEN,DURFLUSS EINSTELLUNG,K ICK OUT,OHNE NULLECKAGE
DIST A 4 POSIZIONI FLOTTANTI,REGOLATORE DI FLUSSO, RIBALTATOE,SIN ZERO FUGA
DIST A 4 POSICION FLOTANTE,DEBITO REGULABLE,RIBALT ORE,SENZA ZERO FUGA

[B] DIST 3 FLOATING POSITIONS,RETURN BY SPRING,FLOW AD JUST,ZERO LEAK
DIST 3 POSITIONS FLOTTANTES,RAPPEL PAR RESSORT,REG LAGE DE DEBIT,FUITE ZERO
VERTEILER 3 DURCH.POSITONEN,EINFACH WIRHEND,DURFLU SS EINSTELLUNG,FUR NULLE CAGE
DIST A 3 POSIZIONI FLOTTANTI,REGOLATORE DI FLUSSO, MOLLA DI RICHIAMO,ZERO FUGA
DIST A 3 POSICION FLOTANTE,DEBITO REGULABLE,ZERO FUGA,RESORTE DE RETRACCION

[C] 4 FLOATING POSITIONS DIST,FLOW ADJUST,KICK−OUT,ZER O LEAK
DIST 4 POSITIONS FLOTTANTES,REGLAGE DE DEBIT,KICK− OUT,FUITE ZERO
4 FACH VERTEILERVENTIL MIT HYDR ENDABSCHALTUNG EINSTELLUNG MENGE,MIT NULL−LECKAGEN
DISTRIBUTORE A 4 POSIZIONI,REGOLATORE DI FLUSSO,SO LLEVATORE IDRAULICO,NESSUNA PERDITA
4 DISTRIBUIDOR CON POSICION FLOTANTE,REGULADOR DE CAUDAL,DESCONEXION POR PRESION,CERO FUGA

1-ZP36-005-B

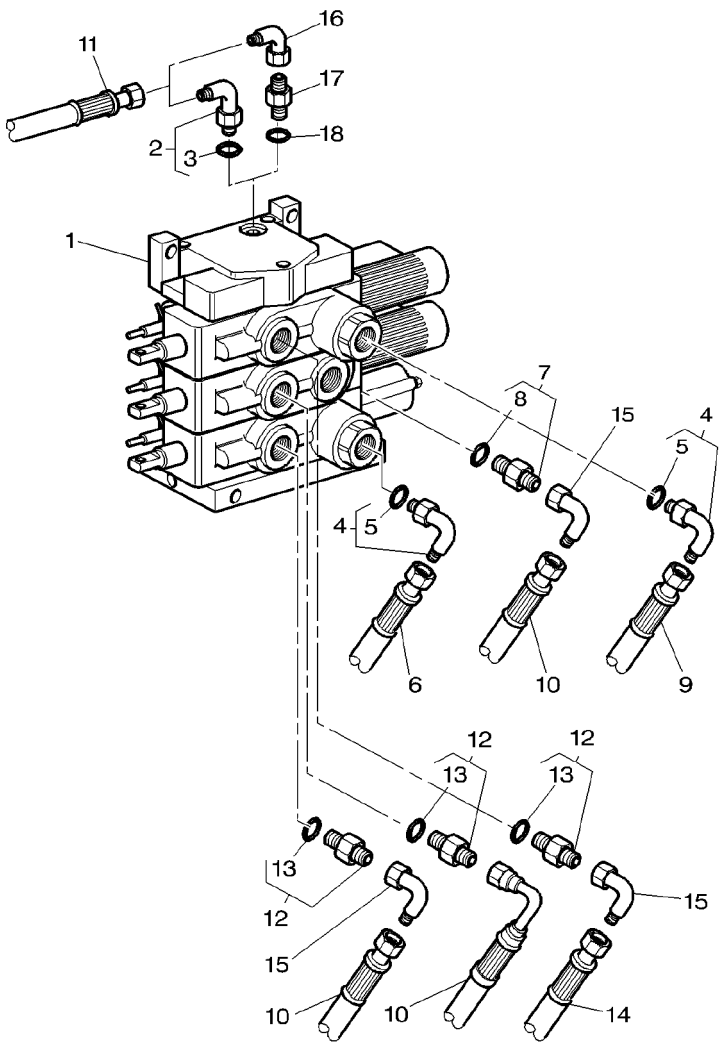

1	3716318M93			**1**	DISTRIBUTOR	DISTRIBUTEUR DISTRIBUTORE VERTEILER DISTRIBUIDOR
2	**357197X91**	➡	H321001	**1**	ELBOW	COUDE GOMITO WINKELSTUECK CODO
3	831452M1	2		**1**	O RING	JOINT TORIQUE ANELLO OR O−RING JUNTA TORICA
4	380031X91			**2**	UNION	RACCORD RACCORDO VERSCHRAUBUNG RACOR
5	1882958M1	4		**1**	O RING	JOINT TORIQUE ANELLO OR O−RING JUNTA TORICA
6	3714956M1	◀▶	600MM	**1**	HYDR HOSE	FLEXIBLE TUBOFLEX IDRAUL HYDR SCHLAUCH TUBO HIDRAULICO
7	380055X91			**1**	UNION	RACCORD RACCORDO VERSCHRAUBUNG RACOR
8	835024M1	7		**1**	O RING	JOINT TORIQUE ANELLO OR O−RING JUNTA TORICA
9	3583591M1	◀▶	690MM	**1**	HYDR HOSE	FLEXIBLE TUBOFLEX IDRAUL HYDR SCHLAUCH TUBO HIDRAULICO
10	3712540M1	◀▶	650MM	**3**	HYDR HOSE	FLEXIBLE TUBOFLEX IDRAUL HYDR SCHLAUCH TUBO HIDRAULICO
11	3716398M1	[A]		**1**	HYDR HOSE	FLEXIBLE TUBOFLEX IDRAUL HYDR SCHLAUCH TUBO HIDRAULICO
11	3792042M1	[B]	◀▶ 1400MM	**1**	HYDR HOSE	FLEXIBLE TUBOFLEX IDRAUL HYDR SCHLAUCH TUBO HIDRAULICO
12	835013M91			**3**	UNION	RACCORD RACCORDO VERSCHRAUBUNG RACOR
13	1882958M1	12		**1**	O RING	JOINT TORIQUE ANELLO OR O−RING JUNTA TORICA
14	3792164M1	◀▶	900MM	**1**	HYDR HOSE	FLEXIBLE TUBOFLEX IDRAUL HYDR SCHLAUCH TUBO HIDRAULICO
15	**367386X1**			**3**	ELBOW	COUDE GOMITO WINKELSTUECK CODO
16	364603X1	➡	H321002	**1**	ELBOW	COUDE GOMITO WINKELSTUECK CODO
17	358733X1	➡	H321002	**1**	UNION	RACCORD RACCORDO VERSCHRAUBUNG RACOR
18	831452M1			**1**	O RING	JOINT TORIQUE ANELLO OR O−RING JUNTA TORICA

[A] WITH PUMP 45CC
AVEC POMPE 45CC
MIT PUMPE 45CC
CON POMPA 45CC
CON BOMBA 45CC

[B] WITH PUMP 60CC
AVEC POMPE 60CC
MIT PUMPE 60CC
CON POMPA 60CC
CON BOMBA 60CC

Auxiliary Distributor
Distributeur Auxiliaire
Zuzatzverteiler
Distributore Auxiliarie
Distribuidor Auxiliar

70-300

3 Distributors − For Hydraulic Motor
3 Distributeurs −Pour Moteur Hydraulique
3 Verteilers − Fur Hydraulik Motor
3 Distributori − Per Motore Idraulico
3 Distribuidores − Per Motor Hidraulico

1-ZP34-017-A

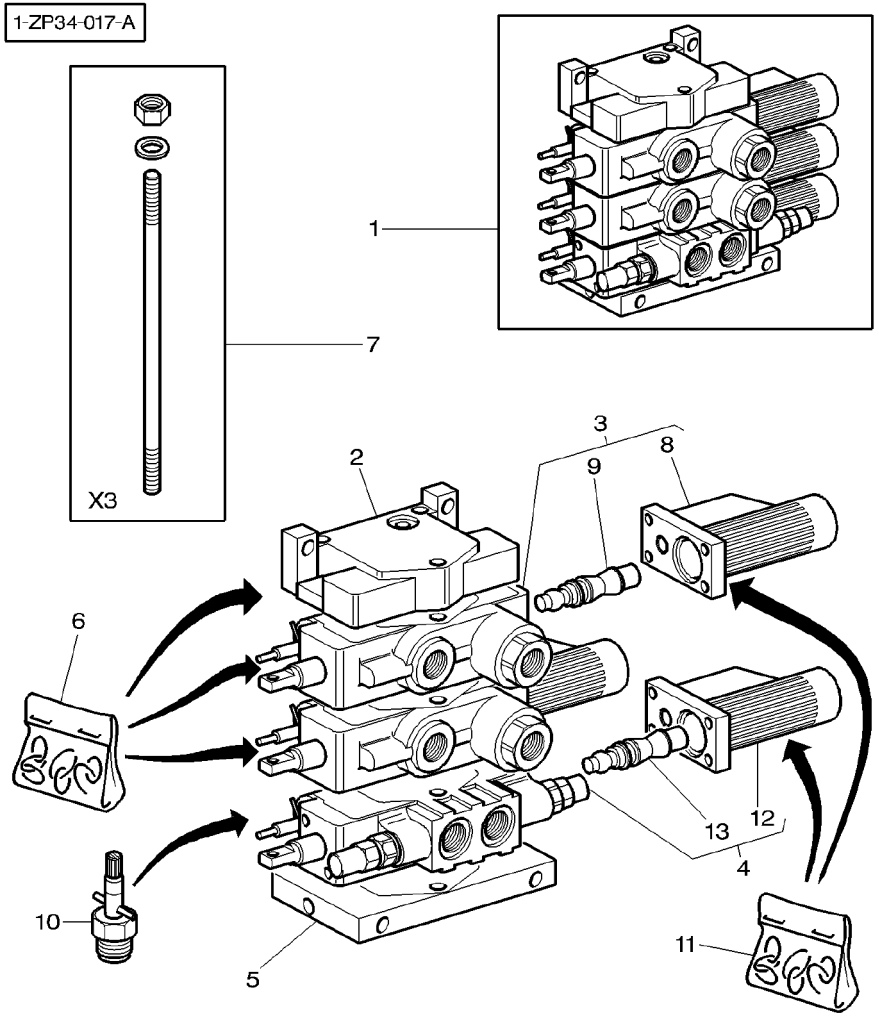

1	3716319M93		**1**	DISTRIBUTOR	DISTRIBUTEUR DISTRIBUTORE	VERTEILER DISTRIBUIDOR
2	3716316M1	1	**1**	ELEMENT	ELEMENT ELEMENTO	ELEMENT ELEMENTO
3	3713928M5	1 [A]	**2**	DISTRIBUTOR	DISTRIBUTEUR DISTRIBUTORE	VERTEILER DISTRIBUIDOR
4	3713927M4	1 [B]	**1**	DISTRIBUTOR	DISTRIBUTEUR DISTRIBUTORE	VERTEILER DISTRIBUIDOR
5	3716314M1	1	**1**	ELEMENT	ELEMENT ELEMENTO	ELEMENT ELEMENTO
6	3792640M1	1 ⇔ 3902067M91	**1**	KIT, JOINT	JEU JOINTS KIT GIUNTO	DICHTUNGSSATZ JUEGO JUNTAS
7	3716366M1	1	**1**	PARTS PACK	JEU PIECES PACCO RICAMBI	SATZ TEILE PAQUETE PIEZAS
8	3902797M91	3	**1**	PROTECTOR	PROTECTEUR PROTETTORE	SCHUTZ PROTECTOR
9	3790773M11	3	**1**	KIT, SERVICE	KIT SERVICE KIT DI SERVIZIO	WARTUNGSSATZ JEUGO,SERVICE
10	3790797M11	1	**1**	KIT, SERVICE	KIT SERVICE KIT DI SERVIZIO	WARTUNGSSATZ JEUGO,SERVICE
11	3902066M91	1	**1**	KIT, JOINT	JEU JOINTS KIT GIUNTO	DICHTUNGSSATZ JUEGO JUNTAS
12	3902797M91	4	**1**	PROTECTOR	PROTECTEUR PROTETTORE	SCHUTZ PROTECTOR
13	3790773M11	4	**1**	KIT, SERVICE	KIT SERVICE KIT DI SERVIZIO	WARTUNGSSATZ JEUGO,SERVICE

[A] 4 FLOATING POSITIONS DIST,FLOW ADJUST,KICK−OUT,ZER O LEAK
DIST 4 POSITIONS FLOTTANTES,REGLAGE DE DEBIT,KICK− OUT,FUITE ZERO
4 FACH VERTEILERVENTIL MIT HYDR ENDABSCHALTUNG EINSTELLUNG MENGE,MIT NULL−LECKAGEN
DISTRIBUTORE A 4 POSIZIONI,REGOLATORE DI FLUSSO,SO LLEVATORE IDRAULICO,NESSUNA PERDITA
4 DISTRIBUIDOR CON POSICION FLOTANTE,REGULADOR DE CAUDAL,DESCONEXION POR PRESION,CERO FUGA

[B] 4 FLOAT POSIT DIST,FLOW ADJUST,KICK−OUT W 2 OVERP RES.VALVE AND RESUPPLYING FOR HYDRAULIC MOTOR
DIST 4 POS.FLOT,REGL DE DEBIT,KICK−OUT,AV. 2CLAPET S DE SURPRESSION ET REALIMENTATION POUR MOTEUR HYD
VERTEILER 4 DURCH.POSITONEN,DURFLUSS EINSTELLUNG,K ICK OUT,RASTUNG FUER HYDR.MOTOR ANWENDUNG
DIST A 4 POSIZIONI FLOTTANTI,REGOLATORE DI FLUSSO, REBALTATOE,2 VAL. NO RITOR SOVRAPRESSSIONE REALIM.
DIST A 4 POSICION FLOTANTE,DEBITO REGULABLE ,REBAL TATORE,2 VAL.DE GRANO SOBREPRESION REALIM. MOT. HI

Load Sensing	Auxiliry Distributors Installatio	70-305	3 Distributors − For Hydraulic Motor − Plumbing
Load Sensing	Montage Distributeurs Auxiliaires		3 Distributeurs − Pour Moteur Hydraulique − Tuyaut Erie
Load Sensing	Zuzatzeinbausverteilers		3 Verteilers − Fur Hydraulik Motor − Leitung
Load Sensing	Installazione Distributori Auxil.		3 Distributori − Per Motore Idraulico − Tubazione
Load Sensing	Instalacion Distribuidores Auxil.		3 Distribuidores − Per Motor Hidraulico − Tuberias

1-ZP36-006-B

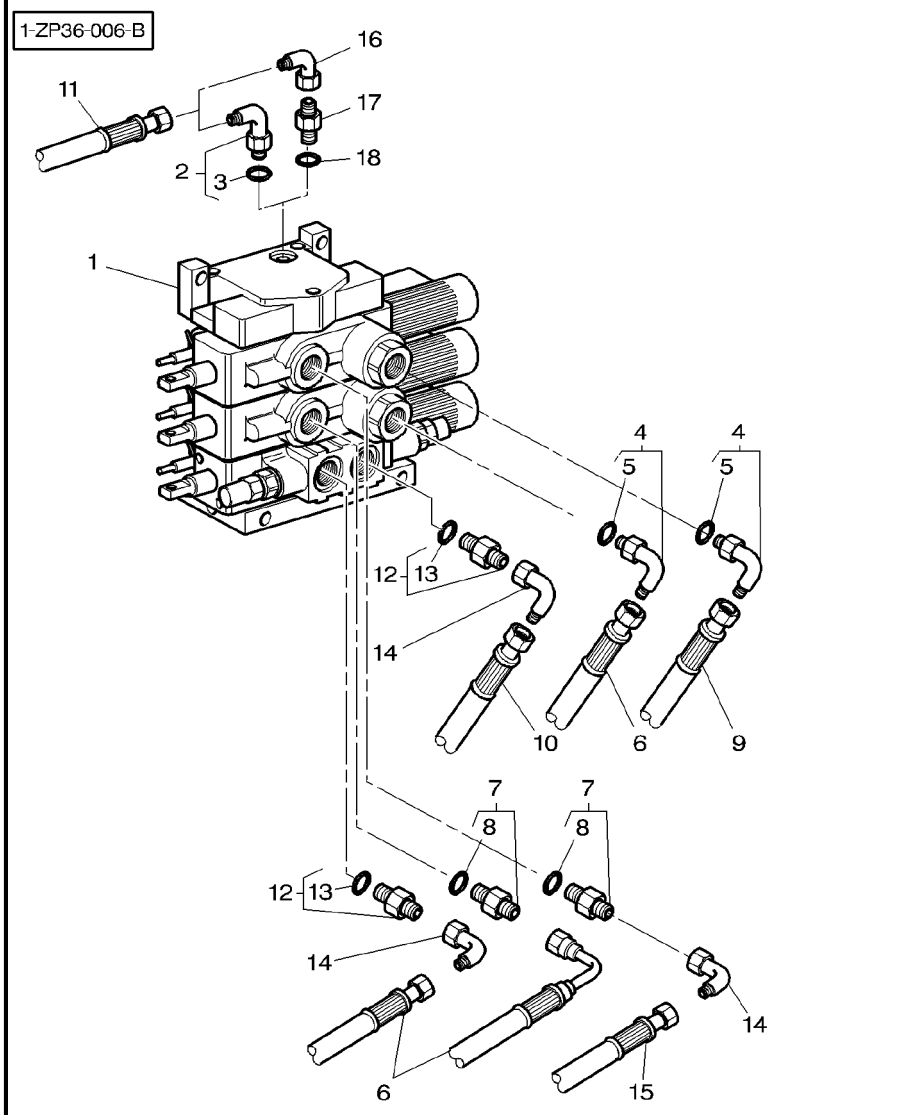

1	3716319M93			1	DISTRIBUTOR	DISTRIBUTEUR DISTRIBUTORE
2	**357197X91**	➡	H321001	1	ELBOW	COUDE GOMITO
3	831452M1	2		1	O RING	JOINT TORIQUE ANELLO OR
4	380031X91			2	UNION	RACCORD RACCORDO
5	1882958M1	4		1	O RING	JOINT TORIQUE ANELLO OR
6	3712540M1	◀▶	650MM	3	HYDR HOSE	FLEXIBLE TUBOFLEX IDRAUL
7	380055X91			1	UNION	RACCORD RACCORDO
8	835024M1	7		1	O RING	JOINT TORIQUE ANELLO OR
9	3583591M1	◀▶	690MM	1	HYDR HOSE	FLEXIBLE TUBOFLEX IDRAUL
10	3714956M1	◀▶	600MM	1	HYDR HOSE	FLEXIBLE TUBOFLEX IDRAUL
11	3716398M1	[A]		1	HYDR HOSE	FLEXIBLE TUBOFLEX IDRAUL
11	3792042M1	[B] ◀▶	1400MM	1	HYDR HOSE	FLEXIBLE TUBOFLEX IDRAUL
12	835013M91			2	UNION	RACCORD RACCORDO
13	1882958M1	12		1	O RING	JOINT TORIQUE ANELLO OR
14	**367386X1**			3	ELBOW	COUDE GOMITO
15	3792164M1	◀▶	900MM	1	HYDR HOSE	FLEXIBLE TUBOFLEX IDRAUL
16	364603X1	➡	H321002	1	ELBOW	COUDE GOMITO
17	358733X1	➡	H321002	1	UNION	RACCORD RACCORDO
18	831452M1			1	O RING	JOINT TORIQUE ANELLO OR

[A] WITH PUMP 45CC
AVEC POMPE 45CC
MIT PUMPE 45CC
CON POMPA 45CC
CON BOMBA 45CC

[B] WITH PUMP 60CC
AVEC POMPE 60CC
MIT PUMPE 60CC
CON POMPA 60CC
CON BOMBA 60CC

Auxiliary Distributor
Distributeur Auxiliaire
Zuzatzverteiler
Distributore Auxiliarie
Distribuidor Auxiliar

70-310

3 Distributors
3 Distributeurs
3 Verteilers
3 Distributori
3 Distribuidores

1-ZP34-018-A

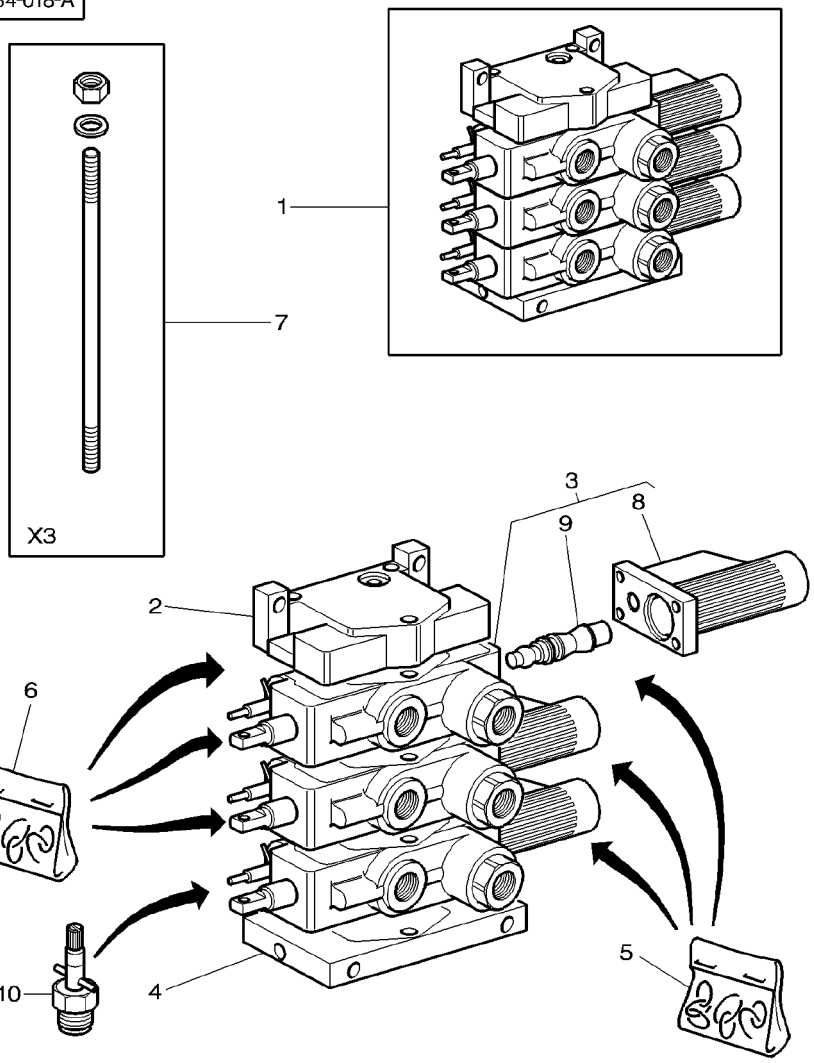

1	3716320M93		**1**	DISTRIBUTOR	DISTRIBUTEUR DISTRIBUTORE	VERTEILER DISTRIBUIDOR
2	3716316M1	1	**1**	ELEMENT	ELEMENT ELEMENTO	ELEMENT ELEMENTO
3	3713928M5	1 [A]	**3**	DISTRIBUTOR	DISTRIBUTEUR DISTRIBUTORE	VERTEILER DISTRIBUIDOR
4	3716314M1	1	**1**	ELEMENT	ELEMENT ELEMENTO	ELEMENT ELEMENTO
5	3902066M91	1	**1**	KIT, JOINT	JEU JOINTS KIT GIUNTO	DICHTUNGSSATZ JUEGO JUNTAS
6	3792640M1	1 ⇔ 3902067M91	**1**	KIT, JOINT	JEU JOINTS KIT GIUNTO	DICHTUNGSSATZ JUEGO JUNTAS
7	3716366M1	1	**1**	PARTS PACK	JEU PIECES PACCO RICAMBI	SATZ TEILE PAQUETE PIEZAS
8	3902797M91	3	**1**	PROTECTOR	PROTECTEUR PROTETTORE	SCHUTZ PROTECTOR
9	3790773M11	3	**1**	KIT, SERVICE	KIT SERVICE KIT DI SERVIZIO	WARTUNGSSATZ JEUGO,SERVICE
10	3790797M11	3	**1**	KIT, SERVICE	KIT SERVICE KIT DI SERVIZIO	WARTUNGSSATZ JEUGO,SERVICE

[A] 4 FLOATING POSITIONS DIST,FLOW ADJUST,KICK−OUT,ZER O LEAK
DIST 4 POSITIONS FLOTTANTES,REGLAGE DE DEBIT,KICK− OUT,FUITE ZERO
4 FACH VERTEILERVENTIL MIT HYDR ENDABSCHALTUNG EINSTELLUNG MENGE,MIT NULL−LECKAGEN
DISTRIBUTORE A 4 POSIZIONI,REGOLATORE DI FLUSSO,SO LLEVATORE IDRAULICO,NESSUNA PERDITA
4 DISTRIBUIDOR CON POSICION FLOTANTE,REGULADOR DE CAUDAL,DESCONEXION POR PRESION,CERO FUGA

1-ZP36-007-B

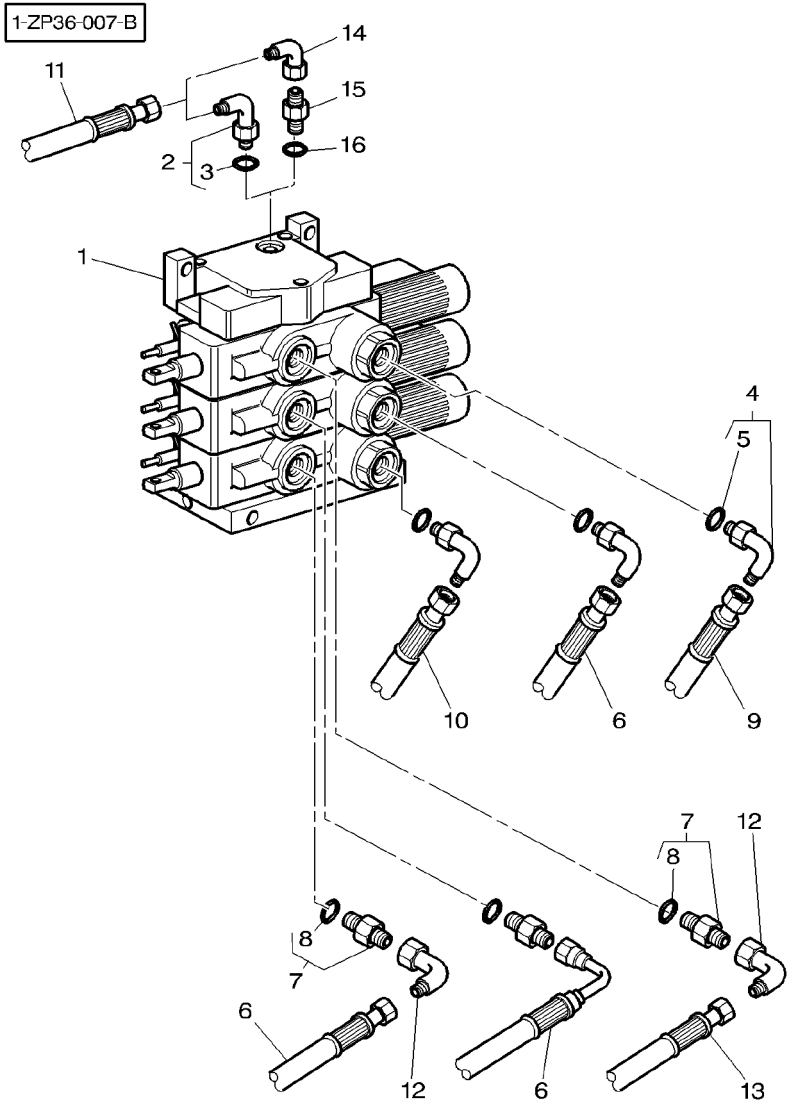

1	3716320M93		**1**	DISTRIBUTOR	DISTRIBUTEUR DISTRIBUTORE	VERTEILER DISTRIBUIDOR
2	**357197X91**	➡| H321001	**1**	ELBOW	COUDE GOMITO	WINKELSTUECK CODO
3	831452M1	2	**1**	O RING	JOINT TORIQUE ANELLO OR	O−RING JUNTA TORICA
4	380031X91	7/88−14	**3**	UNION	RACCORD RACCORDO	VERSCHRAUBUNG RACOR
5	1882958M1	4	**1**	O RING	JOINT TORIQUE ANELLO OR	O−RING JUNTA TORICA
6	3712540M1	◀▶ 650MM	**3**	HYDR HOSE	FLEXIBLE TUBOFLEX IDRAUL	HYDR SCHLAUCH TUBO HIDRAULICO
7	835013M91		**3**	UNION	RACCORD RACCORDO	VERSCHRAUBUNG RACOR
8	1882958M1	7	**1**	O RING	JOINT TORIQUE ANELLO OR	O−RING JUNTA TORICA
9	3583591M1	◀▶ 690MM	**1**	HYDR HOSE	FLEXIBLE TUBOFLEX IDRAUL	HYDR SCHLAUCH TUBO HIDRAULICO
10	3714956M1	◀▶ 600MM	**1**	HYDR HOSE	FLEXIBLE TUBOFLEX IDRAUL	HYDR SCHLAUCH TUBO HIDRAULICO
11	3716398M1	[A]	**1**	HYDR HOSE	FLEXIBLE TUBOFLEX IDRAUL	HYDR SCHLAUCH TUBO HIDRAULICO
11	3792042M1	[B] ◀▶ 1400MM	**1**	HYDR HOSE	FLEXIBLE TUBOFLEX IDRAUL	HYDR SCHLAUCH TUBO HIDRAULICO
12	**367386X1**		**2**	ELBOW	COUDE GOMITO	WINKELSTUECK CODO
13	3792164M1	◀▶ 900MM	**1**	HYDR HOSE	FLEXIBLE TUBOFLEX IDRAUL	HYDR SCHLAUCH TUBO HIDRAULICO
14	364603X1	➡ H321002	**1**	ELBOW	COUDE GOMITO	WINKELSTUECK CODO
15	358733X1	➡ H321002	**1**	UNION	RACCORD RACCORDO	VERSCHRAUBUNG RACOR
16	831452M1		**1**	O RING	JOINT TORIQUE ANELLO OR	O−RING JUNTA TORICA

[A] WITH PUMP 45CC
AVEC POMPE 45CC
MIT PUMPE 45CC
CON POMPA 45CC
CON BOMBA 45CC

[B] WITH PUMP 60CC
AVEC POMPE 60CC
MIT PUMPE 60CC
CON POMPA 60CC
CON BOMBA 60CC

Auxiliary Distributor
Distributeur Auxiliaire
Zuzatzverteiler
Distributore Auxiliarie
Distribuidor Auxiliar

70-320

3 Distributors − Dual Control
3 Distributeurs − Dual Control
3 Verteilers − Dual Control
3 Distributori − Dual Control
3 Distribuidores − Dual Control

1-ZP34-019-A

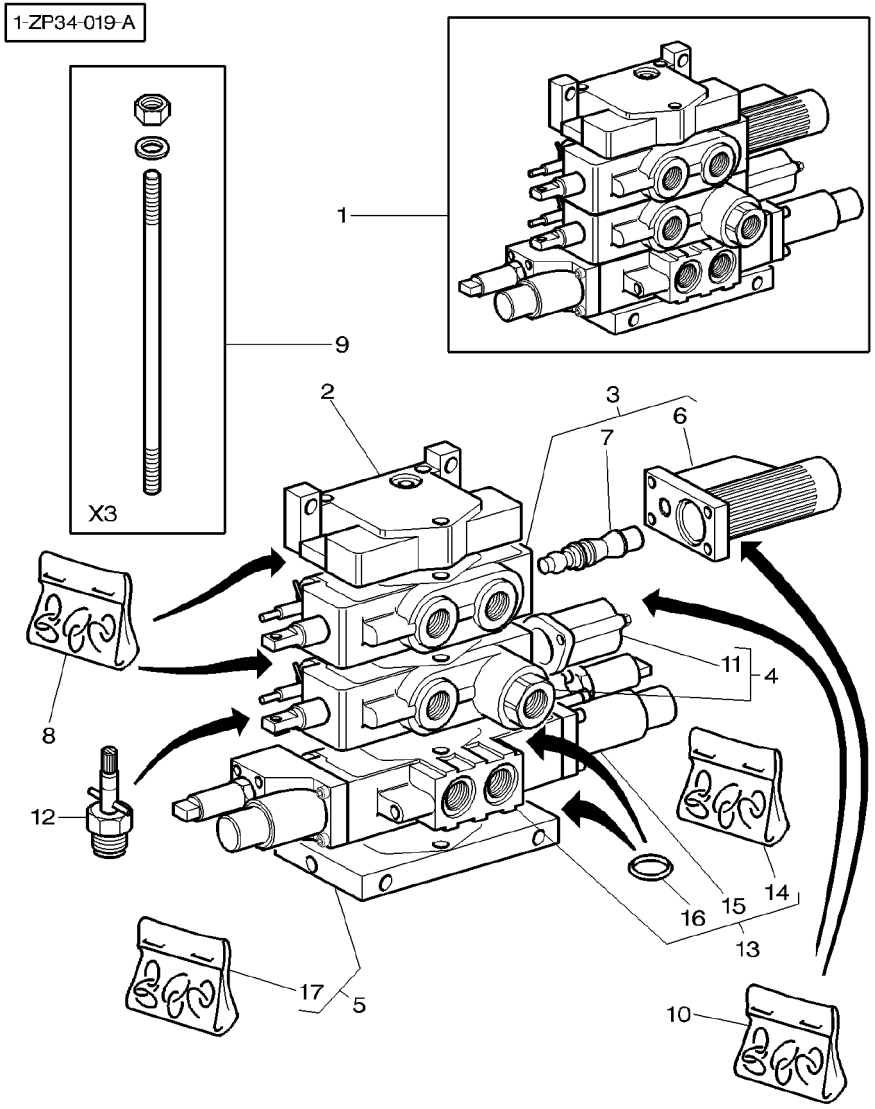

1	3716321M93		**1**	DISTRIBUTOR	DISTRIBUTEUR DISTRIBUTORE	VERTEILER DISTRIBUIDOR
2	3716316M1	1	**1**	ELEMENT	ELEMENT ELEMENTO	ELEMENT ELEMENTO
3	3792803M3	1 [A] ⇔ 3902062M92	**1**	DISTRIBUTOR	DISTRIBUTEUR DISTRIBUTORE	VERTEILER DISTRIBUIDOR
4	3792802M1	1 [B] ⇔ 3902063M91	**1**	DISTRIBUTOR	DISTRIBUTEUR DISTRIBUTORE	VERTEILER DISTRIBUIDOR
5	3716315M1	1	**1**	ELEMENT	ELEMENT ELEMENTO	ELEMENT ELEMENTO
6	3902797M91	3	**1**	PROTECTOR	PROTECTEUR PROTETTORE	SCHUTZ PROTECTOR
7	3790773M11	3	**1**	KIT, SERVICE	KIT SERVICE KIT DI SERVIZIO	WARTUNGSSATZ JEUGO,SERVICE
8	3792640M1	1 ⇔ 3902067M91	**1**	KIT, JOINT	JEU JOINTS KIT GIUNTO	DICHTUNGSSATZ JUEGO JUNTAS
9	3716366M1	1	**1**	PARTS PACK	JEU PIECES PACCO RICAMBI	SATZ TEILE PAQUETE PIEZAS
10	3902066M91	1	**1**	KIT, JOINT	JEU JOINTS KIT GIUNTO	DICHTUNGSSATZ JUEGO JUNTAS
11	3902813M91	4	**1**	PROTECTOR	PROTECTEUR PROTETTORE	SCHUTZ PROTECTOR
12	3790797M11	1	**2**	KIT, SERVICE	KIT SERVICE KIT DI SERVIZIO	WARTUNGSSATZ JEUGO,SERVICE
13	3715122M2	1 [C]	**1**	PRESSURE VALVE	VALVE VALVOLA PRESSION	DRUCKVENTIL VALVULA PRESION
14	3902734M91	13	**1**	KIT, JOINT	JEU JOINTS KIT GIUNTO	DICHTUNGSSATZ JUEGO JUNTAS
15	3900512M92	13	**2**	PRESSURE VALVE	VALVE VALVOLA PRESSION	DRUCKVENTIL VALVULA PRESION
16	359288X1	13	**4**	SEAL	JOINT ETANCHEITE PARAOLIO	DICHTRING RETEN
17	***3792639M1***	5 ⇔ 3902733M91	**1**	KIT, JOINT	JEU JOINTS KIT GIUNTO	DICHTUNGSSATZ JUEGO JUNTAS

[A] DIST 4 FLOATING POSITIONS ,FLOW ADJUST,KICK−OUT,W/ O, ZERO LEAK
DIST 4 POS. FLOTTANTES,REGLAGE DE DEBIT,KICK−OUT, SANS ZERO DE FUITE
VERTEILER 4 DURCH.POSITONEN,DURFLUSS EINSTELLUNG,K ICK OUT,OHNE NULLECKAGE
DIST A 4 POSIZIONI FLOTTANTI,REGOLATORE DI FLUSSO, RIBALTATOE,SIN ZERO FUGA
DIST A 4 POSICION FLOTANTE,DEBITO REGULABLE,RIBALT ORE,SENZA ZERO FUGA

[B] DIST 3 FLOATING POSITIONS,RETURN BY SPRING,FLOW AD JUST,ZERO LEAK
DIST 3 POSITIONS FLOTTANTES,RAPPEL PAR RESSORT,REG LAGE DE DEBIT,FUITE ZERO
VERTEILER 3 DURCH.POSITONEN,EINFACH WIRHEND,DURFLU SS EINSTELLUNG,FUR NULLE CAGE
DIST A 3 POSIZIONI FLOTTANTI,REGOLATORE DI FLUSSO, MOLLA DI RICHIAMO,ZERO FUGA
DIST A 3 POSICION FLOTANTE,DEBITO REGULABLE,ZERO FUGA,RESORTE DE RETRACCION

[C] DIST 3 FLOATING POSITIONS,AUTOMATIC KICK−OUT(BY SP RING),FLOW ADJUST,ELECTRIC CONTROL
DIST 3 POSITIONS FLOTTANTES,RAPPEL PAR RESSORT,REG LAGE DE DEBIT,COMMANDE ELECTRIQUE
VERTEILER 4 DURCH.POSITONEN,DURFLUSS EINSTELLUNG,E INFACH WIRHEND,ELECTRISCHE STEUERUNG
DIST A 3 POSIZIONI,REGOLATORE DI FLUSSO,MOLLA DI R ICHIAMO,COMANDO ELETTRICO
DIST A 3 POSICION,DEBITO REGULABLE,RESORTE DE RETR ACCION,MANDO ELECTRICO

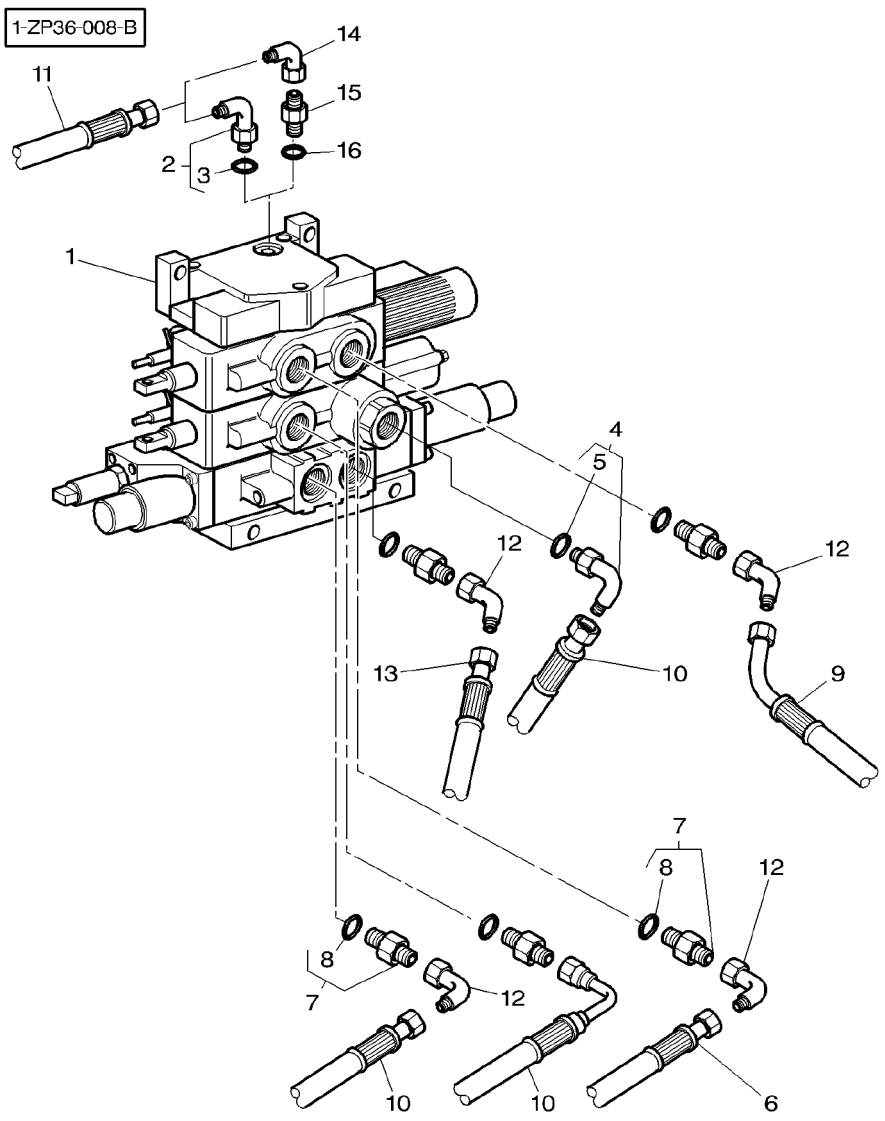

1	3716321M93			**1**	DISTRIBUTOR	DISTRIBUTEUR DISTRIBUTORE
2	**357197X91**	➡	H321001	**1**	ELBOW	COUDE GOMITO
3	831452M1	2		**1**	O RING	JOINT TORIQUE ANELLO OR
4	380031X91			**1**	UNION	RACCORD RACCORDO
5	1882958M1	4		**1**	O RING	JOINT TORIQUE ANELLO OR
6	3792164M1	◀▶	900MM	**1**	HYDR HOSE	FLEXIBLE TUBOFLEX IDRAUL
7	835013M91			**5**	UNION	RACCORD RACCORDO
8	1882958M1	7		**1**	O RING	JOINT TORIQUE ANELLO OR
9	3792167M1	◀▶	780MM	**1**	HYDR HOSE	FLEXIBLE TUBOFLEX IDRAUL
10	3712540M1	◀▶	650MM	**3**	HYDR HOSE	FLEXIBLE TUBOFLEX IDRAUL
11	3716398M1	[A]		**1**	HYDR HOSE	FLEXIBLE TUBOFLEX IDRAUL
11	3792042M1	[B]	◀▶ 1400MM	**1**	HYDR HOSE	FLEXIBLE TUBOFLEX IDRAUL
12	**367386X1**			**4**	ELBOW	COUDE GOMITO
13	3714956M1	◀▶	600MM	**1**	HYDR HOSE	FLEXIBLE TUBOFLEX IDRAUL
14	364603X1	➡	H321002	**1**	ELBOW	COUDE GOMITO
15	358733X1	➡	H321002	**1**	UNION	RACCORD RACCORDO
16	831452M1			**1**	O RING	JOINT TORIQUE ANELLO OR

		VERTEILER DISTRIBUIDOR	
		WINKELSTUECK CODO	
		O−RING JUNTA TORICA	
		VERSCHRAUBUNG RACOR	
		HYDR SCHLAUCH TUBO HIDRAULICO	
		VERSCHRAUBUNG RACOR	
		O−RING JUNTA TORICA	
		HYDR SCHLAUCH TUBO HIDRAULICO	
		HYDR SCHLAUCH TUBO HIDRAULICO	
		HYDR SCHLAUCH TUBO HIDRAULICO	
		HYDR SCHLAUCH TUBO HIDRAULICO	
		WINKELSTUECK CODO	
		HYDR SCHLAUCH TUBO HIDRAULICO	
		WINKELSTUECK CODO	
		VERSCHRAUBUNG RACOR	
		O−RING JUNTA TORICA	

[A] WITH PUMP 45CC
AVEC POMPE 45CC
MIT PUMPE 45CC
CON POMPA 45CC
CON BOMBA 45CC

[B] WITH PUMP 60CC
AVEC POMPE 60CC
MIT PUMPE 60CC
CON POMPA 60CC
CON BOMBA 60CC

Auxiliary Distributor
Distributeur Auxiliaire
Zuzatzverteiler
Distributore Auxiliarie
Distribuidor Auxiliar

70-330

4 Distributors
4 Distributeurs
4 Verteilers
4 Distributori
4 Distribuidores

1-ZP34-020-A

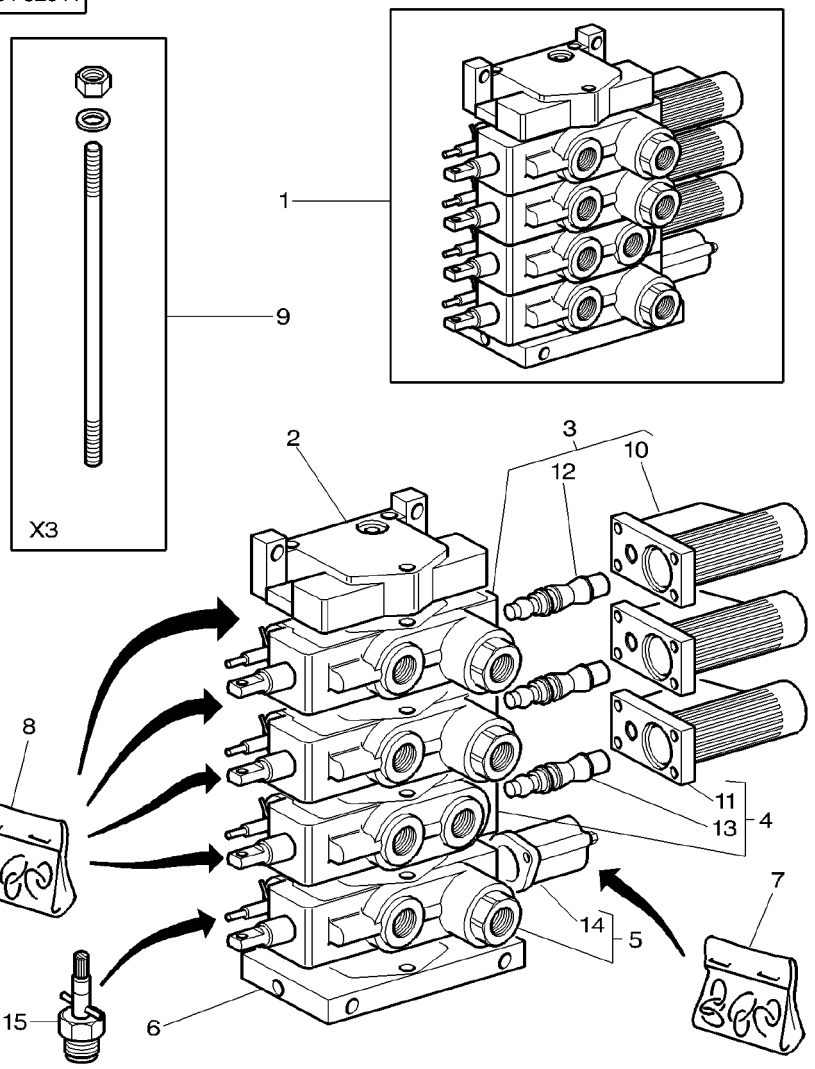

1	3716322M93		**1**	DISTRIBUTOR	DISTRIBUTEUR DISTRIBUTORE	VERTEILER DISTRIBUIDOR
2	3716316M1	1	**1**	ELEMENT	ELEMENT ELEMENTO	ELEMENT ELEMENTO
3	3713928M5	1 [C]	**2**	DISTRIBUTOR	DISTRIBUTEUR DISTRIBUTORE	VERTEILER DISTRIBUIDOR
4	3792803M3	1 [A] ⇔ 3902062M92	**1**	DISTRIBUTOR	DISTRIBUTEUR DISTRIBUTORE	VERTEILER DISTRIBUIDOR
5	3792802M1	1 [B] ⇔ 3902063M91	**1**	DISTRIBUTOR	DISTRIBUTEUR DISTRIBUTORE	VERTEILER DISTRIBUIDOR
6	3716314M1	1	**1**	ELEMENT	ELEMENT ELEMENTO	ELEMENT ELEMENTO
7	3902066M91	1	**1**	KIT, JOINT	JEU JOINTS KIT GIUNTO	DICHTUNGSSATZ JUEGO JUNTAS
8	3792640M1	1 ⇔ 3902067M91	**1**	KIT, JOINT	JEU JOINTS KIT GIUNTO	DICHTUNGSSATZ JUEGO JUNTAS
9	3716367M1	1	**1**	PARTS PACK	JEU PIECES PACCO RICAMBI	SATZ TEILE PAQUETE PIEZAS
10	3902797M91	3	**1**	PROTECTOR	PROTECTEUR PROTETTORE	SCHUTZ PROTECTOR
11	3902797M91	4	**1**	PROTECTEUR	SCHUTZ PROTECTOR	
12	3790773M11	3	**1**	KIT, SERVICE	KIT SERVICE KIT DI SERVIZIO	WARTUNGSSATZ JEUGO,SERVICE
13	3790773M11	4	**1**	KIT, SERVICE	KIT SERVICE KIT DI SERVIZIO	WARTUNGSSATZ JEUGO,SERVICE
14	3902813M91	5	**1**	PROTECTOR	PROTECTEUR PROTETTORE	SCHUTZ PROTECTOR
15	3790797M11	1	**4**	KIT, SERVICE	KIT SERVICE KIT DI SERVIZIO	WARTUNGSSATZ JEUGO,SERVICE

[A] DIST 4 FLOATING POSITIONS ,FLOW ADJUST,KICK−OUT,W/ O, ZERO LEAK
DIST 4 POS. FLOTTANTES,REGLAGE DE DEBIT,KICK−OUT, SANS ZERO DE FUITE
VERTEILER 4 DURCH.POSITONEN,DURFLUSS EINSTELLUNG,K ICK OUT,OHNE NULLECKAGE
DIST A 4 POSIZIONI FLOTTANTI,REGOLATORE DI FLUSSO, RIBALTATOE,SIN ZERO FUGA
DIST A 4 POSICION FLOTANTE,DEBITO REGULABLE,RIBALT ORE,SENZA ZERO FUGA

[B] DIST 3 FLOATING POSITIONS,RETURN BY SPRING,FLOW AD JUST,ZERO LEAK
DIST 3 POSITIONS FLOTTANTES,RAPPEL PAR RESSORT,REG LAGE DE DEBIT,FUITE ZERO
VERTEILER 3 DURCH.POSITONEN,EINFACH WIRHEND,DURFLU SS EINSTELLUNG,FUR NULLE CAGE
DIST A 3 POSIZIONI FLOTTANTI,REGOLATORE DI FLUSSO, MOLLA DI RICHIAMO,ZERO FUGA
DIST A 3 POSICION FLOTANTE,DEBITO REGULABLE,ZERO FUGA,RESORTE DE RETRACCION

[C] 4 FLOATING POSITIONS DIST,FLOW ADJUST,KICK−OUT,ZER O LEAK
DIST 4 POSITIONS FLOTTANTES,REGLAGE DE DEBIT,KICK− OUT,FUITE ZERO
4 FACH VERTEILERVENTIL MIT HYDR ENDABSCHALTUNG EINSTELLUNG MENGE,MIT NULL−LECKAGEN
DISTRIBUTORE A 4 POSIZIONI,REGOLATORE DI FLUSSO,SO LLEVATORE IDRAULICO,NESSUNA PERDITA
4 DISTRIBUIDOR CON POSICION FLOTANTE,REGULADOR DE CAUDAL,DESCONEXION POR PRESION,CERO FUGA

1-ZP36-009-B

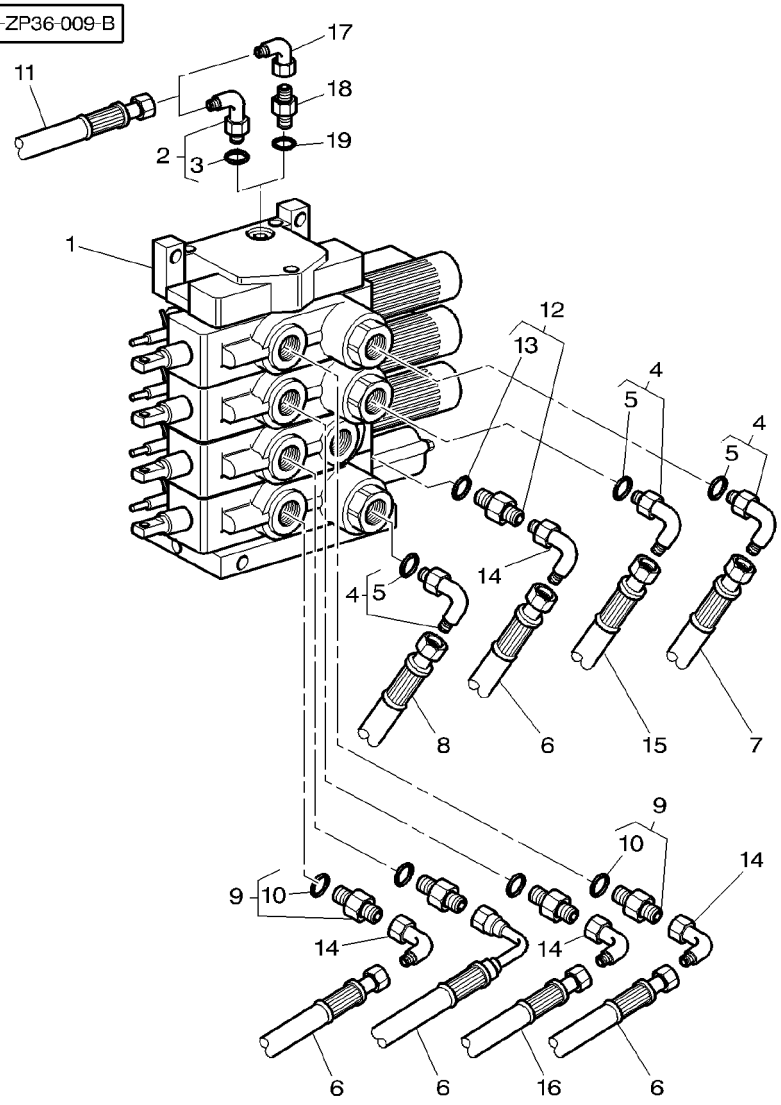

1	3716322M93			**1**	DISTRIBUTOR	DISTRIBUTEUR DISTRIBUTORE DISTRIBUIDOR
2	**357197X91**	➡	H321001	**1**	ELBOW	COUDE GOMITO CODO
3	831452M1	2		**1**	O RING	JOINT TORIQUE ANELLO OR JUNTA TORICA
4	380031X91	7/88−14		**3**	UNION	RACCORD RACCORDO VERSCHRAUBUNG RACOR
5	1882958M1	4		**1**	O RING	JOINT TORIQUE ANELLO OR O−RING JUNTA TORICA
6	3712540M1	◀▶	650MM	**4**	HYDR HOSE	FLEXIBLE TUBOFLEX IDRAUL HYDR SCHLAUCH TUBO HIDRAULICO
7	3714953M1	◀▶	600MM	**1**	HYDR HOSE	FLEXIBLE TUBOFLEX IDRAUL HYDR SCHLAUCH TUBO HIDRAULICO
8	3714956M1	◀▶	600MM	**1**	HYDR HOSE	FLEXIBLE TUBOFLEX IDRAUL HYDR SCHLAUCH TUBO HIDRAULICO
9	835013M91			**4**	UNION	RACCORD RACCORDO VERSCHRAUBUNG RACOR
10	1882958M1	9		**1**	O RING	JOINT TORIQUE ANELLO OR O−RING JUNTA TORICA
11	3716398M1	[A]		**1**	HYDR HOSE	FLEXIBLE TUBOFLEX IDRAUL HYDR SCHLAUCH TUBO HIDRAULICO
11	3792042M1	[B]	◀▶ 1400MM	**1**	HYDR HOSE	FLEXIBLE TUBOFLEX IDRAUL HYDR SCHLAUCH TUBO HIDRAULICO
12	380055X91			**1**	UNION	RACCORD RACCORDO VERSCHRAUBUNG RACOR
13	835024M1	12		**1**	O RING	JOINT TORIQUE ANELLO OR O−RING JUNTA TORICA
14	**367386X1**			**4**	ELBOW	COUDE GOMITO WINKELSTUECK CODO
15	3583591M1	◀▶	690MM	**1**	HYDR HOSE	FLEXIBLE TUBOFLEX IDRAUL HYDR SCHLAUCH TUBO HIDRAULICO
16	3792164M1	◀▶	900MM	**1**	HYDR HOSE	FLEXIBLE TUBOFLEX IDRAUL HYDR SCHLAUCH TUBO HIDRAULICO
17	364603X1	➡	H321002	**1**	ELBOW	COUDE GOMITO WINKELSTUECK CODO
18	358733X1	➡	H321002	**1**	UNION	RACCORD RACCORDO VERSCHRAUBUNG RACOR
19	831452M1			**1**	O RING	JOINT TORIQUE ANELLO OR O−RING JUNTA TORICA

[A] WITH PUMP 45CC
AVEC POMPE 45CC
MIT PUMPE 45CC
CON POMPA 45CC
CON BOMBA 45CC

[B] WITH PUMP 60CC
AVEC POMPE 60CC
MIT PUMPE 60CC
CON POMPA 60CC
CON BOMBA 60CC

Auxiliary Distributor
Distributeur Auxiliaire
Zuzatzverteiler
Distributore Auxiliarie
Distribuidor Auxiliar

70-340

4 Distributors − For Hydraulic Motor
4 Distributeurs −Pour Moteur Hydraulique
4 Verteilers − Fur Hydraulik Motor
4 Distributori − Per Motore Idraulico
4 Distribuidores − Per Motor Hidraulico

1-ZP34-021-A

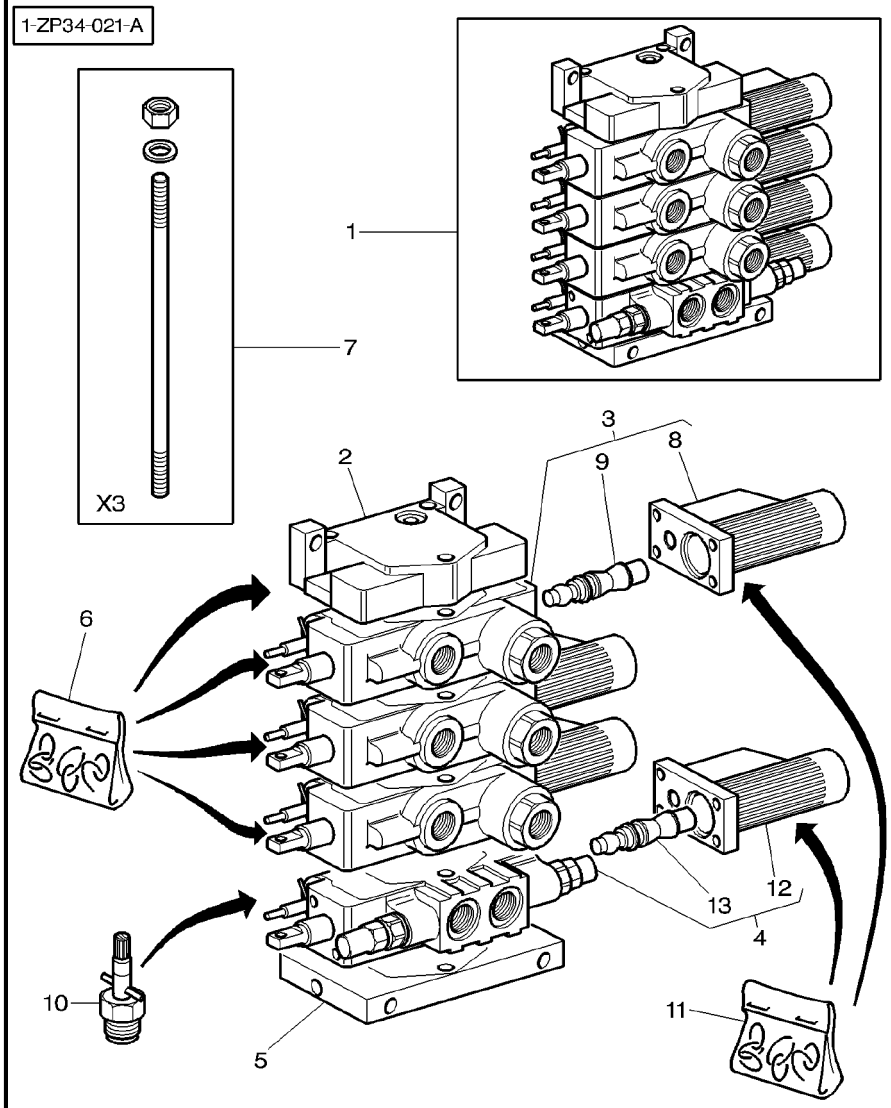

1	3716323M93		**1**	DISTRIBUTOR	DISTRIBUTEUR DISTRIBUTORE	VERTEILER DISTRIBUIDOR
2	3716316M1	1	**1**	ELEMENT	ELEMENT ELEMENTO	ELEMENT ELEMENTO
3	3713928M5	1 [A]	**3**	DISTRIBUTOR	DISTRIBUTEUR DISTRIBUTORE	VERTEILER DISTRIBUIDOR
4	3713927M4	1 [B]	**1**	DISTRIBUTOR	DISTRIBUTEUR DISTRIBUTORE	VERTEILER DISTRIBUIDOR
5	3716314M1	1	**1**	ELEMENT	ELEMENT ELEMENTO	ELEMENT ELEMENTO
6	3792640M1	1 ⇔ 3902067M91	**1**	KIT, JOINT	JEU JOINTS KIT GIUNTO	DICHTUNGSSATZ JUEGO JUNTAS
7	3716367M1	1	**1**	PARTS PACK	JEU PIECES PACCO RICAMBI	SATZ TEILE PAQUETE PIEZAS
8	3902797M91	3	**1**	PROTECTOR	PROTECTEUR PROTETTORE	SCHUTZ PROTECTOR
9	3790773M11	3	**1**	KIT, SERVICE	KIT SERVICE KIT DI SERVIZIO	WARTUNGSSATZ JEUGO,SERVICE
10	3790797M11	1	**1**	KIT, SERVICE	KIT SERVICE KIT DI SERVIZIO	WARTUNGSSATZ JEUGO,SERVICE
11	3902066M91	1	**1**	KIT, JOINT	JEU JOINTS KIT GIUNTO	DICHTUNGSSATZ JUEGO JUNTAS
12	3902797M91	4	**1**	PROTECTOR	PROTECTEUR PROTETTORE	SCHUTZ PROTECTOR
13	3790773M11	4	**1**	KIT, SERVICE	KIT SERVICE KIT DI SERVIZIO	WARTUNGSSATZ JEUGO,SERVICE

[A] 4 FLOATING POSITIONS DIST,FLOW ADJUST,KICK−OUT,ZER O LEAK
DIST 4 POSITIONS FLOTTANTES,REGLAGE DE DEBIT,KICK− OUT,FUITE ZERO
4 FACH VERTEILERVENTIL MIT HYDR ENDABSCHALTUNG EINSTELLUNG MENGE,MIT NULL−LECKAGEN
DISTRIBUTORE A 4 POSIZIONI,REGOLATORE DI FLUSSO,SO LLEVATORE IDRAULICO,NESSUNA PERDITA
4 DISTRIBUIDOR CON POSICION FLOTANTE,REGULADOR DE CAUDAL,DESCONEXION POR PRESION,CERO FUGA

[B] 4 FLOAT POSIT DIST,FLOW ADJUST,KICK−OUT W 2 OVERP RES.VALVE AND RESUPPLYING FOR HYDRAULIC MOTOR
DIST 4 POS.FLOT,REGL DE DEBIT,KICK−OUT,AV. 2CLAPET S DE SURPRESSION ET REALIMENTATION POUR MOTEUR HYD
VERTEILER 4 DURCH.POSITONEN,DURFLUSS EINSTELLUNG,K ICK OUT,RASTUNG FUER HYDR.MOTOR ANWENDUNG
DIST A 4 POSIZIONI FLOTTANTI,REGOLATORE DI FLUSSO, REBALTATOE,2 VAL. NO RITOR SOVRAPRESSSIONE REALIM.
DIST A 4 POSICION FLOTANTE,DEBITO REGULABLE ,REBAL TATORE,2 VAL.DE GRANO SOBREPRESION REALIM. MOT. HI

70-345

4 Distributors − For Hydraulic Motor − Plumbing
4 Distributeurs − Pour Moteur Hydraulique − Tuyaut Erie
4 Verteilers − Fur Hydraulik Motor − Leitung
4 Distributori − Per Motore Idraulico − Tubazione
4 Distribuidores − Per Motor Hidraulico − Tuberias

1-ZP36-010-B

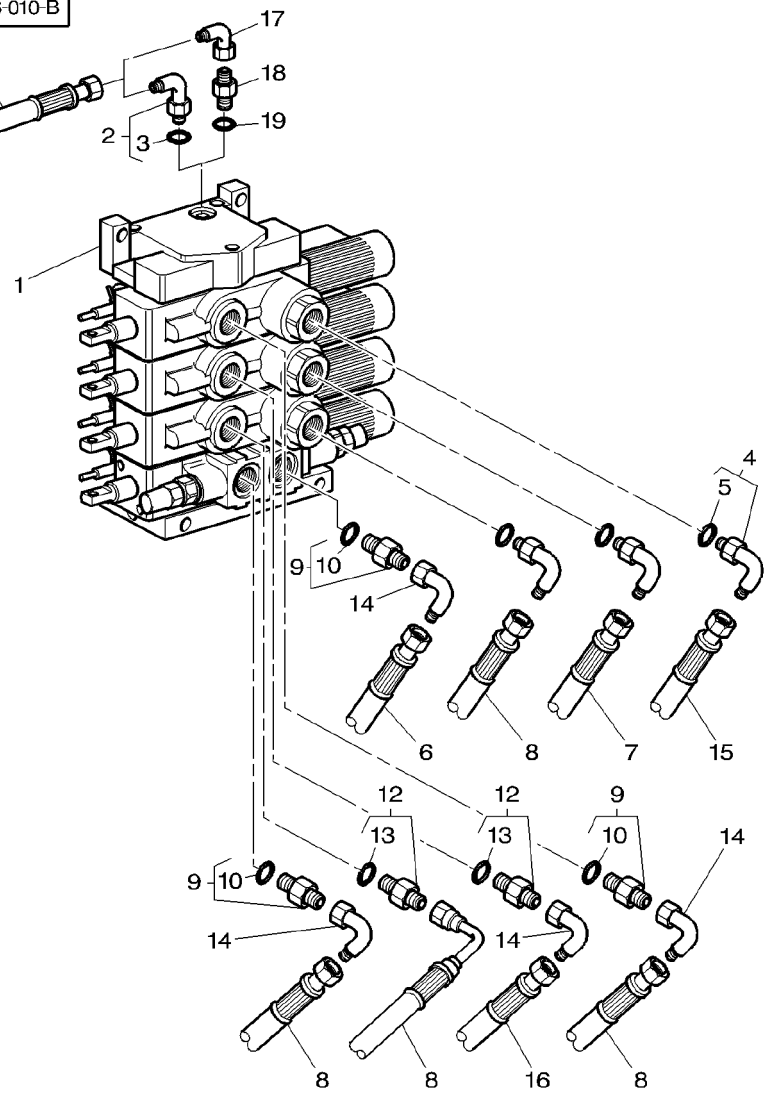

1	3716323M93			**1**	DISTRIBUTOR	DISTRIBUTEUR DISTRIBUTORE VERTEILER DISTRIBUIDOR
2	**357197X91**	➡	H321001	**1**	ELBOW	COUDE GOMITO WINKELSTUECK CODO
3	831452M1	2		**1**	O RING	JOINT TORIQUE ANELLO OR O−RING JUNTA TORICA
4	380031X91	7/88−14		**3**	UNION	RACCORD RACCORDO VERSCHRAUBUNG RACOR
5	1882958M1	4		**1**	O RING	JOINT TORIQUE ANELLO OR O−RING JUNTA TORICA
6	3714956M1	◀▶	600MM	**1**	HYDR HOSE	FLEXIBLE TUBOFLEX IDRAUL HYDR SCHLAUCH TUBO HIDRAULICO
7	3583591M1	◀▶	690MM	**1**	HYDR HOSE	FLEXIBLE TUBOFLEX IDRAUL HYDR SCHLAUCH TUBO HIDRAULICO
8	3712540M1	◀▶	650MM	**4**	HYDR HOSE	FLEXIBLE TUBOFLEX IDRAUL HYDR SCHLAUCH TUBO HIDRAULICO
9	835013M91			**3**	UNION	RACCORD RACCORDO VERSCHRAUBUNG RACOR
10	1882958M1	9		**1**	O RING	JOINT TORIQUE ANELLO OR O−RING JUNTA TORICA
11	3716398M1	[A]		**1**	HYDR HOSE	FLEXIBLE TUBOFLEX IDRAUL HYDR SCHLAUCH TUBO HIDRAULICO
11	3792042M1	[B]	◀▶ 1400MM	**1**	HYDR HOSE	FLEXIBLE TUBOFLEX IDRAUL HYDR SCHLAUCH TUBO HIDRAULICO
12	380055X91			**2**	UNION	RACCORD RACCORDO VERSCHRAUBUNG RACOR
13	835024M1	12		**1**	O RING	JOINT TORIQUE ANELLO OR O−RING JUNTA TORICA
14	**367386X1**			**4**	ELBOW	COUDE GOMITO WINKELSTUECK CODO
15	3714953M1	◀▶	600MM	**1**	HYDR HOSE	FLEXIBLE TUBOFLEX IDRAUL HYDR SCHLAUCH TUBO HIDRAULICO
16	3792164M1	◀▶	900MM	**1**	HYDR HOSE	FLEXIBLE TUBOFLEX IDRAUL HYDR SCHLAUCH TUBO HIDRAULICO
17	364603X1	➡	H321002	**1**	ELBOW	COUDE GOMITO WINKELSTUECK CODO
18	358733X1	➡	H321002	**1**	UNION	RACCORD RACCORDO VERSCHRAUBUNG RACOR
19	831452M1			**1**	O RING	JOINT TORIQUE ANELLO OR O−RING JUNTA TORICA

[A] WITH PUMP 45CC
AVEC POMPE 45CC
MIT PUMPE 45CC
CON POMPA 45CC
CON BOMBA 45CC

[B] WITH PUMP 60CC
AVEC POMPE 60CC
MIT PUMPE 60CC
CON POMPA 60CC
CON BOMBA 60CC

Auxiliary Distributor
Distributeur Auxiliaire
Zuzatzverteiler
Distributore Auxiliarie
Distribuidor Auxiliar

70-350

4 Distributors
4 Distributeurs
4 Verteilers
4 Distributori
4 Distribuidores

1-ZP34-022-A

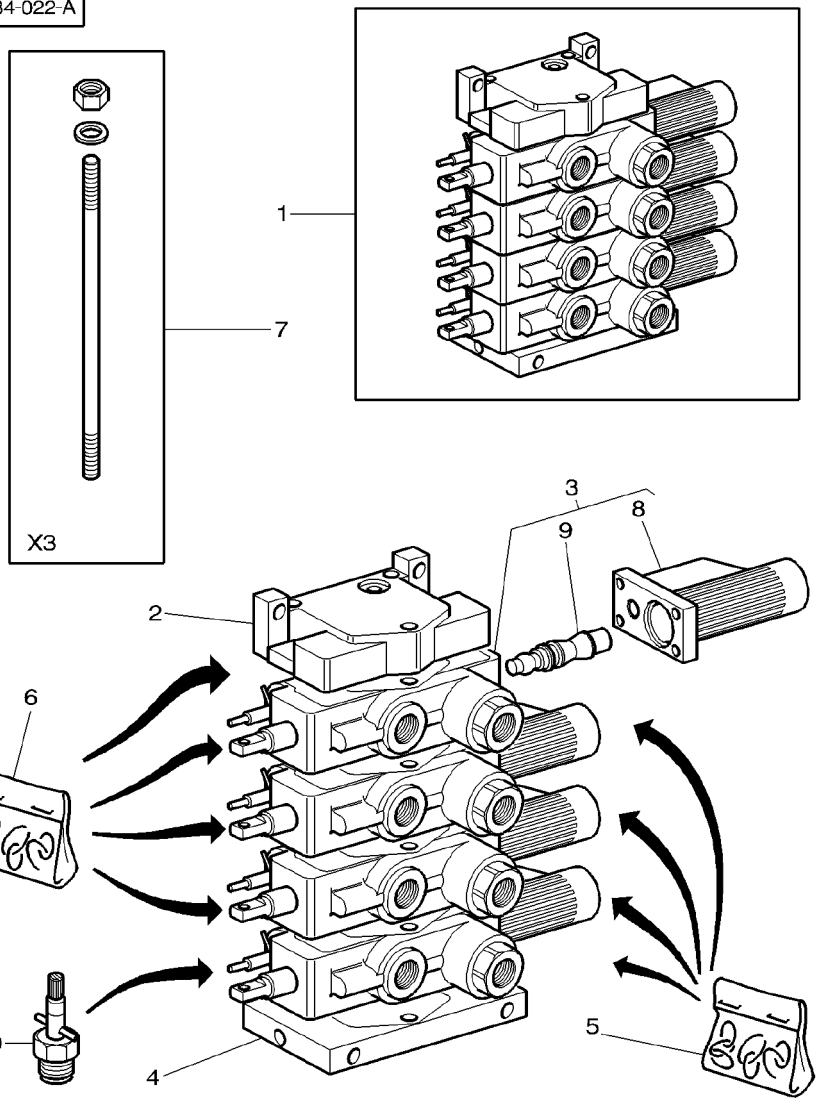

1	3716324M93		**1**	DISTRIBUTOR	DISTRIBUTEUR DISTRIBUTORE	VERTEILER DISTRIBUIDOR
2	3716316M1	1	**1**	ELEMENT	ELEMENT ELEMENTO	ELEMENT ELEMENTO
3	3713928M5	1 [A]	**4**	DISTRIBUTOR	DISTRIBUTEUR DISTRIBUTORE	VERTEILER DISTRIBUIDOR
4	3716314M1	1	**1**	ELEMENT	ELEMENT ELEMENTO	ELEMENT ELEMENTO
5	3902066M91	1	**1**	KIT, JOINT	JEU JOINTS KIT GIUNTO	DICHTUNGSSATZ JUEGO JUNTAS
6	3792640M1	1 ⇔ 3902067M91	**1**	KIT, JOINT	JEU JOINTS KIT GIUNTO	DICHTUNGSSATZ JUEGO JUNTAS
7	3716367M1	1	**1**	PARTS PACK	JEU PIECES PACCO RICAMBI	SATZ TEILE PAQUETE PIEZAS
8	3902797M91	3	**1**	PROTECTOR	PROTECTEUR PROTETTORE	SCHUTZ PROTECTOR
9	3790773M11	3	**1**	KIT, SERVICE	KIT SERVICE KIT DI SERVIZIO	WARTUNGSSATZ JEUGO,SERVICE
10	3790797M11	3	**1**	KIT, SERVICE	KIT SERVICE KIT DI SERVIZIO	WARTUNGSSATZ JEUGO,SERVICE

[A] 4 FLOATING POSITIONS DIST,FLOW ADJUST,KICK−OUT,ZER O LEAK
DIST 4 POSITIONS FLOTTANTES,REGLAGE DE DEBIT,KICK− OUT,FUITE ZERO
4 FACH VERTEILERVENTIL MIT HYDR ENDABSCHALTUNG EINSTELLUNG MENGE,MIT NULL−LECKAGEN
DISTRIBUTORE A 4 POSIZIONI,REGOLATORE DI FLUSSO,SO LLEVATORE IDRAULICO,NESSUNA PERDITA
4 DISTRIBUIDOR CON POSICION FLOTANTE,REGULADOR DE CAUDAL,DESCONEXION POR PRESION,CERO FUGA

Load Sensing	Auxiliry Distributors Installatio	70-355	4 Distributors
Load Sensing	Montage Distributeurs Auxiliaires		4 Distributeurs
Load Sensing	Zuzatzeinbausverteilers		4 Verteilers
Load Sensing	Installazione Distributori Auxil.		4 Distributori
Load Sensing	Instalacion Distribuidores Auxil.		4 Distribuidores

1-ZP36-011-B

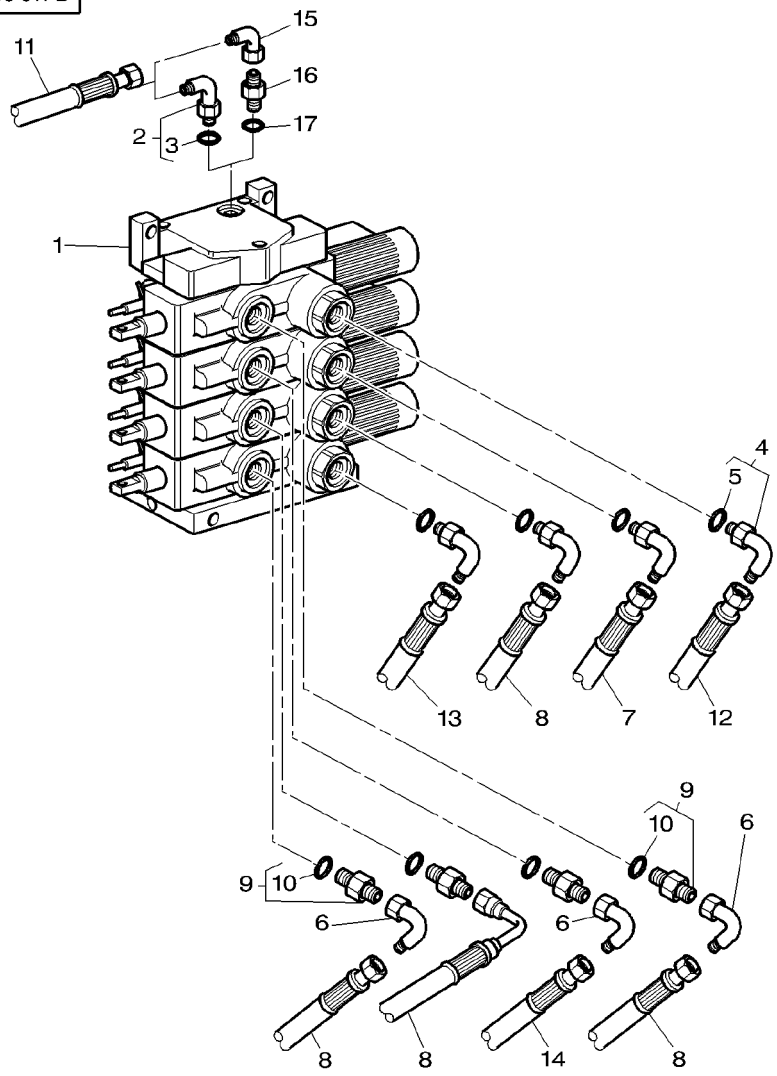

1	3716324M93			**1**	DISTRIBUTOR	DISTRIBUTEUR DISTRIBUTORE VERTEILER DISTRIBUIDOR
2	**357197X91**	➡	H321001	**1**	ELBOW	COUDE GOMITO WINKELSTUECK CODO
3	831452M1	2		**1**	O RING	JOINT TORIQUE ANELLO OR O-RING JUNTA TORICA
4	380031X91	7/88-14		**4**	UNION	RACCORD RACCORDO VERSCHRAUBUNG RACOR
5	1882958M1	4		**1**	O RING	JOINT TORIQUE ANELLO OR O-RING JUNTA TORICA
6	**367386X1**			**3**	ELBOW	COUDE GOMITO WINKELSTUECK CODO
7	3583591M1	◀▶	690MM	**1**	HYDR HOSE	FLEXIBLE TUBOFLEX IDRAUL HYDR SCHLAUCH TUBO HIDRAULICO
8	3712540M1	◀▶	650MM	**4**	HYDR HOSE	FLEXIBLE TUBOFLEX IDRAUL HYDR SCHLAUCH TUBO HIDRAULICO
9	835013M91			**4**	UNION	RACCORD RACCORDO VERSCHRAUBUNG RACOR
10	1882958M1	9		**1**	O RING	JOINT TORIQUE ANELLO OR O-RING JUNTA TORICA
11	3716398M1	[A]		**1**	HYDR HOSE	FLEXIBLE TUBOFLEX IDRAUL HYDR SCHLAUCH TUBO HIDRAULICO
11	3792042M1	[B]	◀▶ 1400MM	**1**	HYDR HOSE	FLEXIBLE TUBOFLEX IDRAUL HYDR SCHLAUCH TUBO HIDRAULICO
12	3714953M1	◀▶	600MM	**1**	HYDR HOSE	FLEXIBLE TUBOFLEX IDRAUL HYDR SCHLAUCH TUBO HIDRAULICO
13	3714956M1	◀▶	600MM	**1**	HYDR HOSE	FLEXIBLE TUBOFLEX IDRAUL HYDR SCHLAUCH TUBO HIDRAULICO
14	3792164M1	◀▶	900MM	**1**	HYDR HOSE	FLEXIBLE TUBOFLEX IDRAUL HYDR SCHLAUCH TUBO HIDRAULICO
15	364603X1	➡	H321002	**1**	ELBOW	COUDE GOMITO WINKELSTUECK CODO
16	358733X1	➡	H321002	**1**	UNION	RACCORD RACCORDO VERSCHRAUBUNG RACOR
17	831452M1			**1**	O RING	JOINT TORIQUE ANELLO OR O-RING JUNTA TORICA

[A] WITH PUMP 45CC
AVEC POMPE 45CC
MIT PUMPE 45CC
CON POMPA 45CC
CON BOMBA 45CC

[B] WITH PUMP 60CC
AVEC POMPE 60CC
MIT PUMPE 60CC
CON POMPA 60CC
CON BOMBA 60CC

Auxiliary Distributor
Distributeur Auxiliaire
Zuzatzverteiler
Distributore Auxiliarie
Distribuidor Auxiliar

70-360

4 Distributors − Dual Control
4 Distributeurs − Dual Control
4 Verteilers − Dual Control
4 Distributori − Dual Control
4 Distribuidores − Dual Control

1-ZP34-023-A

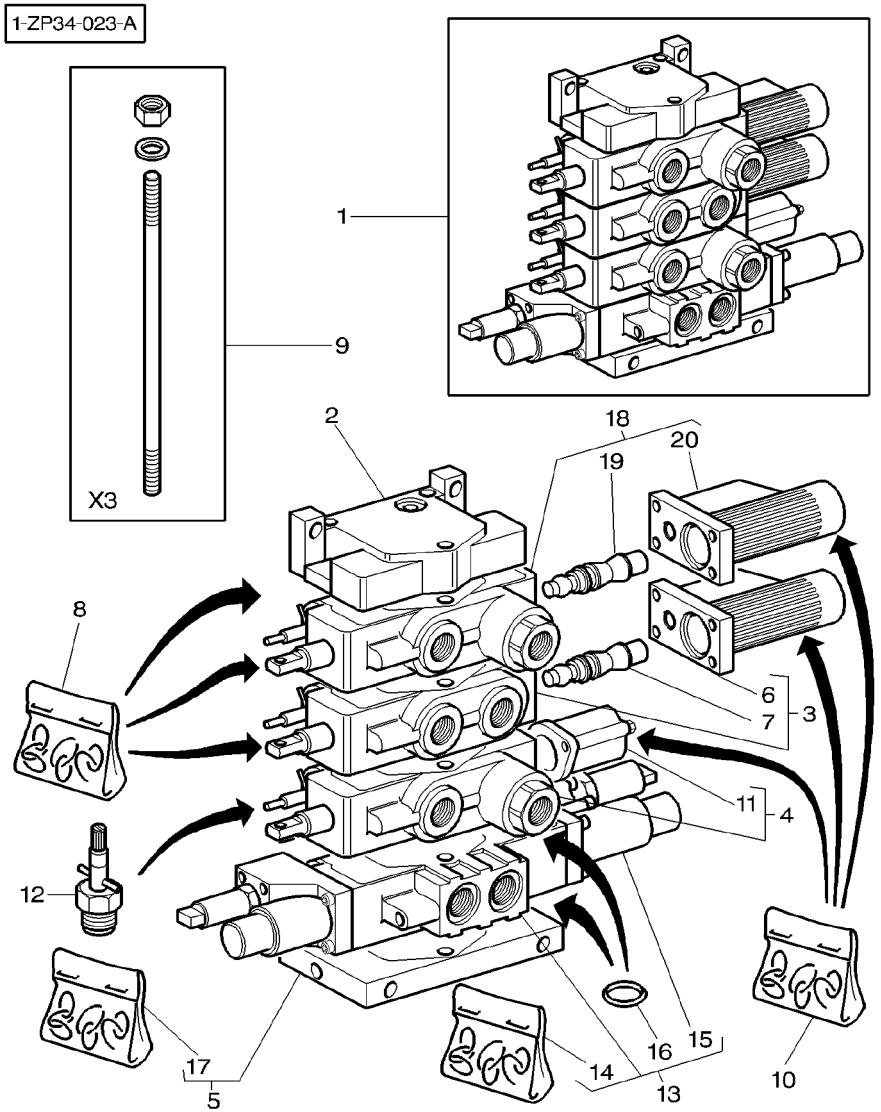

1	3716393M93		**1**	DISTRIBUTOR	DISTRIBUTEUR DISTRIBUTORE	VERTEILER DISTRIBUIDOR
2	3716316M1	1	**1**	ELEMENT	ELEMENT ELEMENTO	ELEMENT ELEMENTO
3	3792803M3	1 [A] ⇔ 3902062M92	**1**	DISTRIBUTOR	DISTRIBUTEUR DISTRIBUTORE	VERTEILER DISTRIBUIDOR
4	3792802M1	1 [B] ⇔ 3902063M91	**1**	DISTRIBUTOR	DISTRIBUTEUR DISTRIBUTORE	VERTEILER DISTRIBUIDOR
5	3716315M1	1	**1**	ELEMENT	ELEMENT ELEMENTO	ELEMENT ELEMENTO
6	3902797M91	3	**1**	PROTECTOR	PROTECTEUR PROTETTORE	SCHUTZ PROTECTOR
7	3790773M11	3	**1**	KIT, SERVICE	KIT SERVICE KIT DI SERVIZIO	WARTUNGSSATZ JEUGO,SERVICE
8	3792640M1	1 ⇔ 3902067M91	**1**	KIT, JOINT	JEU JOINTS KIT GIUNTO	DICHTUNGSSATZ JUEGO JUNTAS
9	3716367M1	1	**1**	PARTS PACK	JEU PIECES PACCO RICAMBI	SATZ TEILE PAQUETE PIEZAS
10	3902066M91	1	**1**	KIT, JOINT	JEU JOINTS KIT GIUNTO	DICHTUNGSSATZ JUEGO JUNTAS
11	3902813M91	4	**1**	PROTECTOR	PROTECTEUR PROTETTORE	SCHUTZ PROTECTOR
12	3790797M11	1	**3**	KIT, SERVICE	KIT SERVICE KIT DI SERVIZIO	WARTUNGSSATZ JEUGO,SERVICE
13	3715122M2	1 [C]	**1**	PRESSURE VALVE	VALVE VALVOLA PRESSION	DRUCKVENTIL VALVULA PRESION
14	3902734M91	13	**1**	KIT, JOINT	JEU JOINTS KIT GIUNTO	DICHTUNGSSATZ JUEGO JUNTAS
15	3900512M92	13	**2**	PRESSURE VALVE	VALVE VALVOLA PRESSION	DRUCKVENTIL VALVULA PRESION
16	359288X1	13	**4**	SEAL	JOINT ETANCHEITE PARAOLIO	DICHTRING RETEN
17	***3792639M1***	5 ⇔ 3902733M91	**1**	KIT, JOINT	JEU JOINTS KIT GIUNTO	DICHTUNGSSATZ JUEGO JUNTAS
18	3713928M5	1 [D]	**1**	DISTRIBUTOR	DISTRIBUTEUR DISTRIBUTORE	VERTEILER DISTRIBUIDOR
19	3790773M11	18	**1**	KIT, SERVICE	KIT SERVICE KIT DI SERVIZIO	WARTUNGSSATZ JEUGO,SERVICE
20	3902797M91	18	**1**	PROTECTOR	PROTECTEUR PROTETTORE	SCHUTZ PROTECTOR

[A] DIST 4 FLOATING POSITIONS ,FLOW ADJUST,KICK−OUT,W/ O, ZERO LEAK
DIST 4 POS. FLOTTANTES,REGLAGE DE DEBIT,KICK−OUT, SANS ZERO DE FUITE
VERTEILER 4 DURCH.POSITONEN,DURFLUSS EINSTELLUNG,K ICK OUT,OHNE NULLECKAGE
DIST A 4 POSIZIONI FLOTTANTI,REGOLATORE DI FLUSSO, RIBALTATOE,SIN ZERO FUGA
DIST A 4 POSICION FLOTANTE,DEBITO REGULABLE,RIBALT ORE,SENZA ZERO FUGA

[B] DIST 3 FLOATING POSITIONS,RETURN BY SPRING,FLOW AD JUST,ZERO LEAK
DIST 3 POSITIONS FLOTTANTES,RAPPEL PAR RESSORT,REG LAGE DE DEBIT,FUITE ZERO
VERTEILER 3 DURCH.POSITONEN,EINFACH WIRHEND,DURFLU SS EINSTELLUNG,FUR NULLE CAGE
DIST A 3 POSIZIONI FLOTTANTI,REGOLATORE DI FLUSSO, MOLLA DI RICHIAMO,ZERO FUGA
DIST A 3 POSICION FLOTANTE,DEBITO REGULABLE,ZERO FUGA,RESORTE DE RETRACCION

Auxiliary Distributor
Distributeur Auxiliaire
Zuzatzverteiler
Distributore Auxiliarie
Distribuidor Auxiliar

70-360

4 Distributors − Dual Control
4 Distributeurs − Dual Control
4 Verteilers − Dual Control
4 Distributori − Dual Control
4 Distribuidores − Dual Control

1-ZP34-023-A

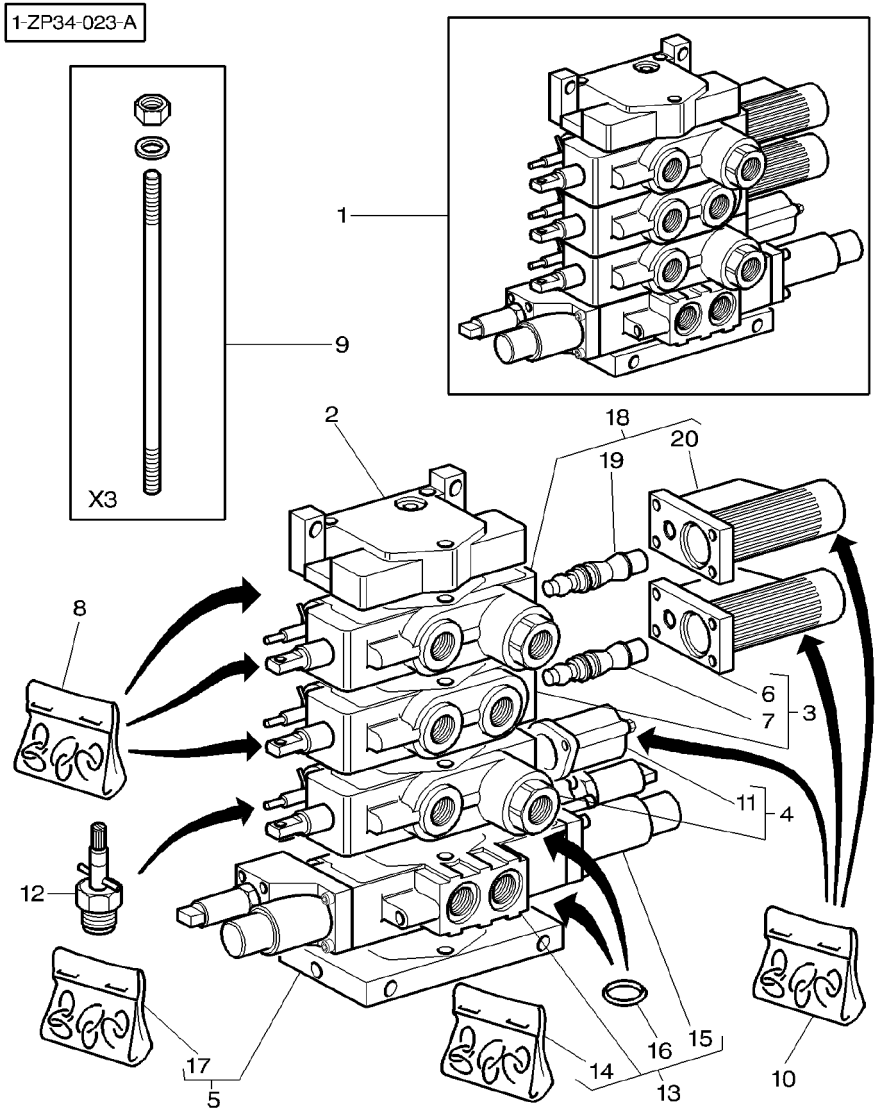

[C] DIST 3 FLOATING POSITIONS,AUTOMATIC KICK−OUT(BY SP RING),FLOW ADJUST,ELECTRIC CONTROL
DIST 3 POSITIONS FLOTTANTES,RAPPEL PAR RESSORT,REG LAGE DE DEBIT,COMMANDE ELECTRIQUE
VERTEILER 4 DURCH.POSITONEN,DURFLUSS EINSTELLUNG,E INFACH WIRHEND,ELECTRISCHE STEUERUNG
DIST A 3 POSIZIONI,REGOLATORE DI FLUSSO,MOLLA DI R ICHIAMO,COMANDO ELETTRICO
DIST A 3 POSICION,DEBITO REGULABLE,RESORTE DE RETR ACCION,MANDO ELECTRICO

[D] 4 FLOATING POSITIONS DIST,FLOW ADJUST,KICK−OUT,ZER O LEAK
DIST 4 POSITIONS FLOTTANTES,REGLAGE DE DEBIT,KICK− OUT,FUITE ZERO
4 FACH VERTEILERVENTIL MIT HYDR ENDABSCHALTUNG EINSTELLUNG MENGE,MIT NULL−LECKAGEN
DISTRIBUTORE A 4 POSIZIONI,REGOLATORE DI FLUSSO,SO LLEVATORE IDRAULICO,NESSUNA PERDITA
4 DISTRIBUIDOR CON POSICION FLOTANTE,REGULADOR DE CAUDAL,DESCONEXION POR PRESION,CERO FUGA

1-ZP36-012-B

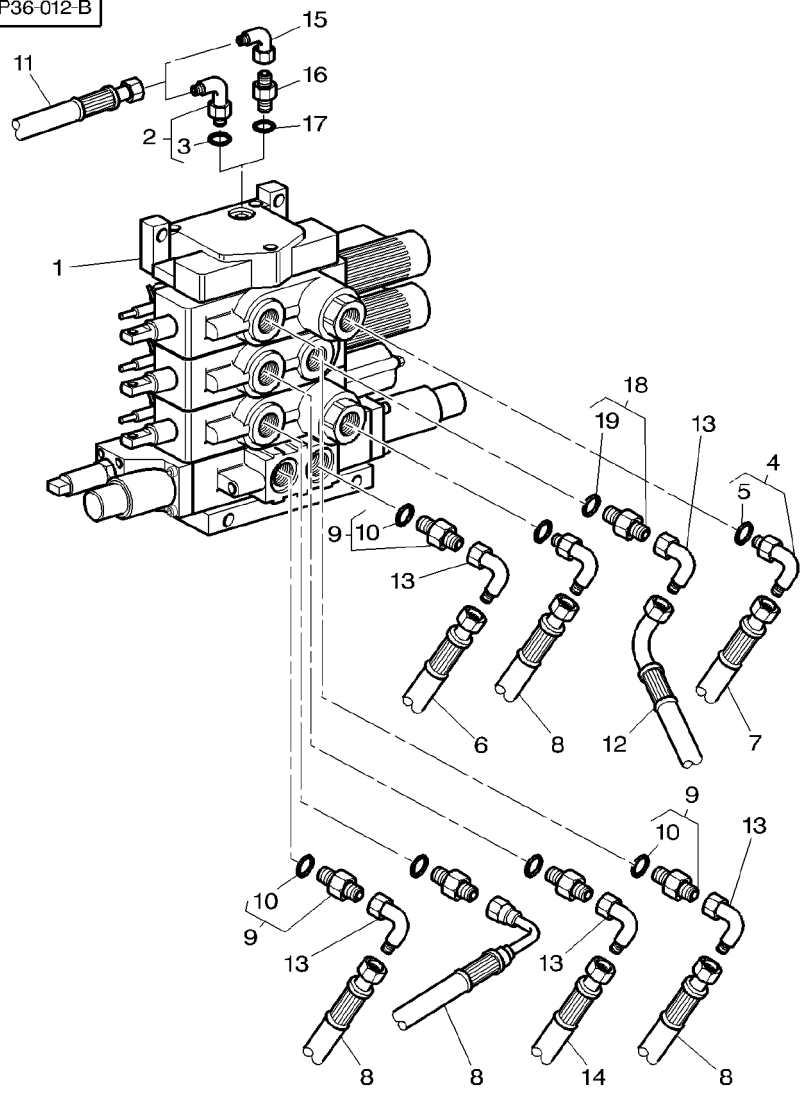

1	3716393M93			**1**	DISTRIBUTOR	DISTRIBUTEUR DISTRIBUTORE VERTEILER DISTRIBUIDOR
2	**357197X91**	⇥	H321001	**1**	ELBOW	COUDE GOMITO WINKELSTUECK CODO
3	831452M1	2		**1**	O RING	JOINT TORIQUE ANELLO OR O−RING JUNTA TORICA
4	380031X91		7/88−14	**2**	UNION	RACCORD RACCORDO VERSCHRAUBUNG RACOR
5	1882958M1	4		**1**	O RING	JOINT TORIQUE ANELLO OR O−RING JUNTA TORICA
6	3714956M1	◂▸	600MM	**1**	HYDR HOSE	FLEXIBLE TUBOFLEX IDRAUL HYDR SCHLAUCH TUBO HIDRAULICO
7	3714953M1	◂▸	600MM	**1**	HYDR HOSE	FLEXIBLE TUBOFLEX IDRAUL HYDR SCHLAUCH TUBO HIDRAULICO
8	3712540M1	◂▸	650MM	**4**	HYDR HOSE	FLEXIBLE TUBOFLEX IDRAUL HYDR SCHLAUCH TUBO HIDRAULICO
9	835013M91			**5**	UNION	RACCORD RACCORDO VERSCHRAUBUNG RACOR
10	1882958M1	9		**1**	O RING	JOINT TORIQUE ANELLO OR O−RING JUNTA TORICA
11	3716398M1	[A]		**1**	HYDR HOSE	FLEXIBLE TUBOFLEX IDRAUL HYDR SCHLAUCH TUBO HIDRAULICO
11	3792042M1	[B]	◂▸ 1400MM	**1**	HYDR HOSE	FLEXIBLE TUBOFLEX IDRAUL HYDR SCHLAUCH TUBO HIDRAULICO
12	3792167M1	◂▸	780MM	**1**	HYDR HOSE	FLEXIBLE TUBOFLEX IDRAUL HYDR SCHLAUCH TUBO HIDRAULICO
13	**367386X1**			**5**	ELBOW	COUDE GOMITO WINKELSTUECK CODO
14	3792164M1	◂▸	900MM	**1**	HYDR HOSE	FLEXIBLE TUBOFLEX IDRAUL HYDR SCHLAUCH TUBO HIDRAULICO
15	364603X1	⇤	H321002	**1**	ELBOW	COUDE GOMITO WINKELSTUECK CODO
16	358733X1	⇤	H321002	**1**	UNION	RACCORD RACCORDO VERSCHRAUBUNG RACOR
17	831452M1			**1**	O RING	JOINT TORIQUE ANELLO OR O−RING JUNTA TORICA
18	380055X91			**1**	UNION	RACCORD RACCORDO VERSCHRAUBUNG RACOR
19	835024M1	18		**1**	O RING	JOINT TORIQUE ANELLO OR O−RING JUNTA TORICA

[A] WITH PUMP 45CC
AVEC POMPE 45CC
MIT PUMPE 45CC
CON POMPA 45CC
CON BOMBA 45CC

[B] WITH PUMP 60CC
AVEC POMPE 60CC
MIT PUMPE 60CC
CON POMPA 60CC
CON BOMBA 60CC

Auxiliary Distributor
Distributeur Auxiliaire
Zuzatzverteiler
Distributore Auxiliarie
Distribuidor Auxiliar

70-370

4 Distributors − For Hydraulic Motor − Dual Contro L
4 Distributeurs − Pour Moteur Hydraulique − Dual C Ontrol
4 Verteilers − Fur Hydraulik Motor − Dual Control
4 Distributori − Per Motore Idraulico − Dual Contr Ol
4 Distribuidores − Per Motor Hidraulico − Dual Con Trol

1-ZP34-024-A

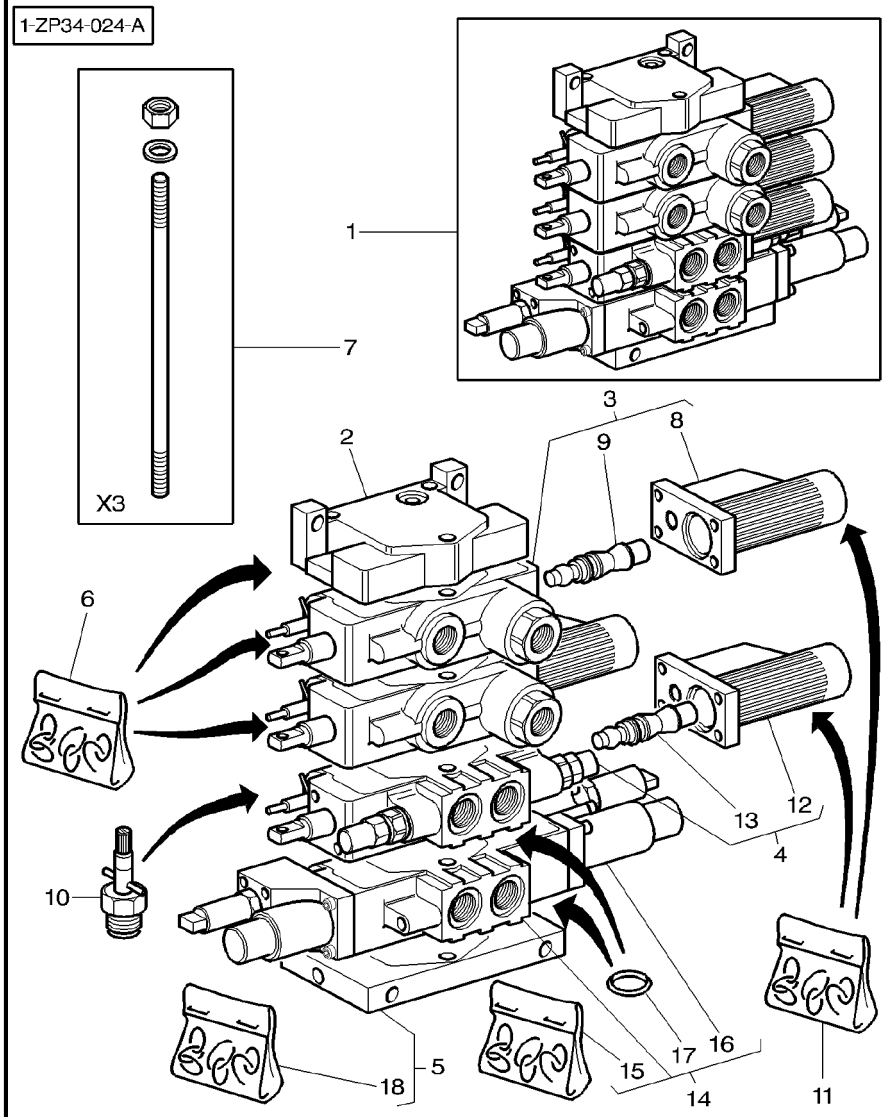

1	3716394M93		**1**	DISTRIBUTOR	DISTRIBUTEUR DISTRIBUTORE	VERTEILER DISTRIBUIDOR
2	3716316M1	1	**1**	ELEMENT	ELEMENT ELEMENTO	ELEMENT ELEMENTO
3	3713928M5	1 [A]	**2**	DISTRIBUTOR	DISTRIBUTEUR DISTRIBUTORE	VERTEILER DISTRIBUIDOR
4	3713927M4	1 [B]	**1**	DISTRIBUTOR	DISTRIBUTEUR DISTRIBUTORE	VERTEILER DISTRIBUIDOR
5	3716315M1	1	**1**	ELEMENT	ELEMENT ELEMENTO	ELEMENT ELEMENTO
6	3792640M1	1 ⇔ 3902067M91	**1**	KIT, JOINT	JEU JOINTS KIT GIUNTO	DICHTUNGSSATZ JUEGO JUNTAS
7	3716367M1	1	**1**	PARTS PACK	JEU PIECES PACCO RICAMBI	SATZ TEILE PAQUETE PIEZAS
8	3902797M91	3	**1**	PROTECTOR	PROTECTEUR PROTETTORE	SCHUTZ PROTECTOR
9	3790773M11	3	**1**	KIT, SERVICE	KIT SERVICE KIT DI SERVIZIO	WARTUNGSSATZ JEUGO,SERVICE
10	3790797M11	1	**2**	KIT, SERVICE	KIT SERVICE KIT DI SERVIZIO	WARTUNGSSATZ JEUGO,SERVICE
11	3902066M91	1	**1**	KIT, JOINT	JEU JOINTS KIT GIUNTO	DICHTUNGSSATZ JUEGO JUNTAS
12	3902797M91	4	**1**	PROTECTOR	PROTECTEUR PROTETTORE	SCHUTZ PROTECTOR
13	3790773M11	4	**1**	KIT, SERVICE	KIT SERVICE KIT DI SERVIZIO	WARTUNGSSATZ JEUGO,SERVICE
14	3715122M2	1 [C]	**1**	PRESSURE VALVE	VALVE VALVOLA PRESSION	DRUCKVENTIL VALVULA PRESION
15	3902734M91	14	**1**	KIT, JOINT	JEU JOINTS KIT GIUNTO	DICHTUNGSSATZ JUEGO JUNTAS
16	3900512M92	14	**2**	PRESSURE VALVE	VALVE VALVOLA PRESSION	DRUCKVENTIL VALVULA PRESION
17	359288X1	14	**4**	SEAL	JOINT ETANCHEITE PARAOLIO	DICHTRING RETEN
18	***3792639M1***	5 ⇔ 3902733M91	**1**	KIT, JOINT	JEU JOINTS KIT GIUNTO	DICHTUNGSSATZ JUEGO JUNTAS

[A] 4 FLOATING POSITIONS DIST,FLOW ADJUST,KICK−OUT,ZER O LEAK
DIST 4 POSITIONS FLOTTANTES,REGLAGE DE DEBIT,KICK− OUT,FUITE ZERO
4 FACH VERTEILERVENTIL MIT HYDR ENDABSCHALTUNG EINSTELLUNG MENGE,MIT NULL−LECKAGEN
DISTRIBUTORE A 4 POSIZIONI,REGOLATORE DI FLUSSO,SO LLEVATORE IDRAULICO,NESSUNA PERDITA
4 DISTRIBUIDOR CON POSICION FLOTANTE,REGULADOR DE CAUDAL,DESCONEXION POR PRESION,CERO FUGA

[B] 4 FLOAT POSIT DIST,FLOW ADJUST,KICK−OUT W 2 OVERP RES.VALVE AND RESUPPLYING FOR HYDRAULIC MOTOR
DIST 4 POS.FLOT,REGL DE DEBIT,KICK−OUT,AV. 2CLAPET S DE SURPRESSION ET REALIMENTATION POUR MOTEUR HYD
VERTEILER 4 DURCH.POSITONEN,DURFLUSS EINSTELLUNG,K ICK OUT,RASTUNG FUER HYDR.MOTOR ANWENDUNG
DIST A 4 POSIZIONI FLOTTANTI,REGOLATORE DI FLUSSO, REBALTATOE,2 VAL. NO RITOR SOVRAPRESSSIONE REALIM.
DIST A 4 POSICION FLOTANTE,DEBITO REGULABLE ,REBAL TATORE,2 VAL.DE GRANO SOBREPRESION REALIM. MOT. HI

Auxiliary Distributor
Distributeur Auxiliaire
Zuzatzverteiler
Distributore Auxiliarie
Distribuidor Auxiliar

70-370

4 Distributors − For Hydraulic Motor − Dual Contro L
4 Distributeurs − Pour Moteur Hydraulique − Dual C Ontrol
4 Verteilers − Fur Hydraulik Motor − Dual Control
4 Distributori − Per Motore Idraulico − Dual Contr Ol
4 Distribuidores − Per Motor Hidraulico − Dual Con Trol

1-ZP34-024-A

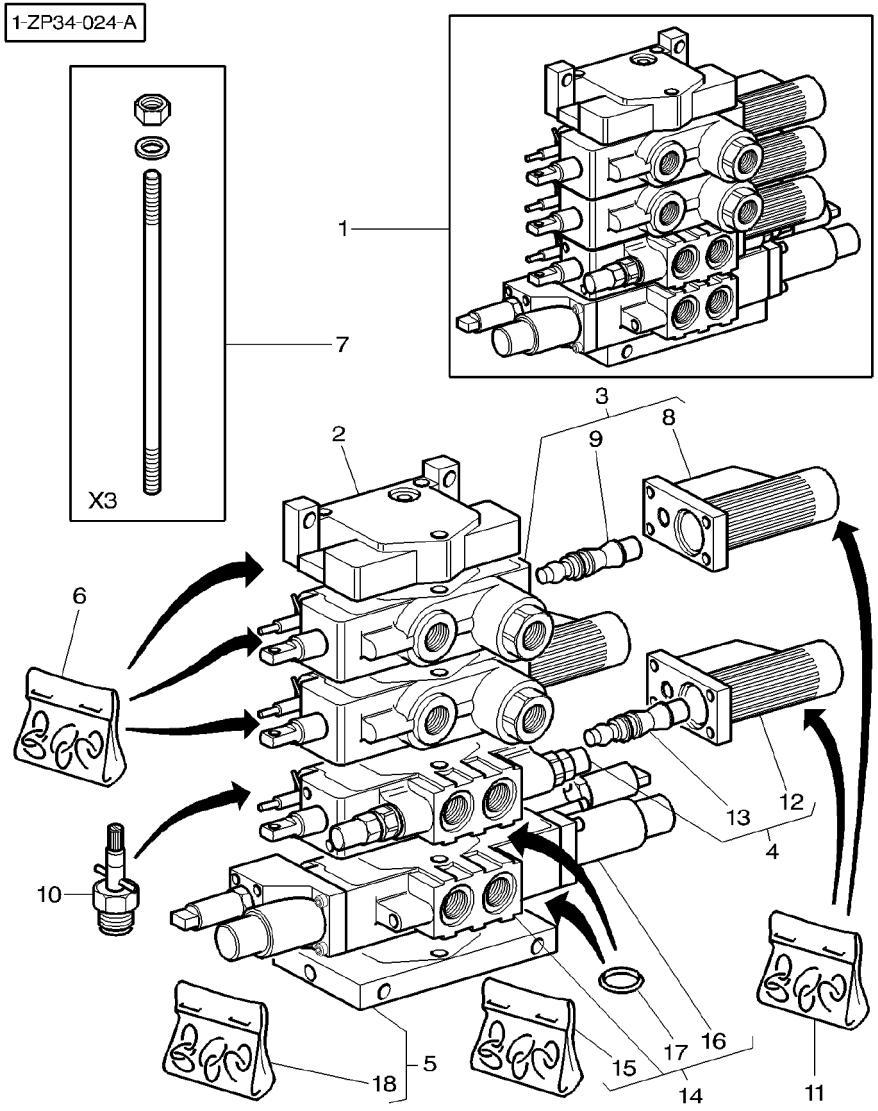

[C] DIST 3 FLOATING POSITIONS,AUTOMATIC KICK−OUT(BY SP RING),FLOW ADJUST,ELECTRIC CONTROL
DIST 3 POSITIONS FLOTTANTES,RAPPEL PAR RESSORT,REG LAGE DE DEBIT,COMMANDE ELECTRIQUE
VERTEILER 4 DURCH.POSITONEN,DURFLUSS EINSTELLUNG,E INFACH WIRHEND,ELECTRISCHE STEUERUNG
DIST A 3 POSIZIONI,REGOLATORE DI FLUSSO,MOLLA DI R ICHIAMO,COMANDO ELETTRICO
DIST A 3 POSICION,DEBITO REGULABLE,RESORTE DE RETR ACCION,MANDO ELECTRICO

Load Sensing	Auxiliry Distributors Installatio	70-375
Load Sensing	Montage Distributeurs Auxiliaires	
Load Sensing	Zuzatzeinbausverteilers	
Load Sensing	Installazione Distributori Auxil.	
Load Sensing	Instalacion Distribuidores Auxil.	

4 Distributors − For Hydraulic Motor − Dual Contro L − Plumbing
4 Distributeurs − Pour Moteur Hydraulique − Dual C Ontrol −Tuyauterie
4 Verteilers − Fur Hydraulik Motor − Dual Control −Leitung
4 Distributori − Per Motore Idraulico − Dual Contr Ol − Tubazione
4 Distribuidores − Per Motor Hidraulico − Dual Con Trol − Tuberias

1-ZP36-013-B

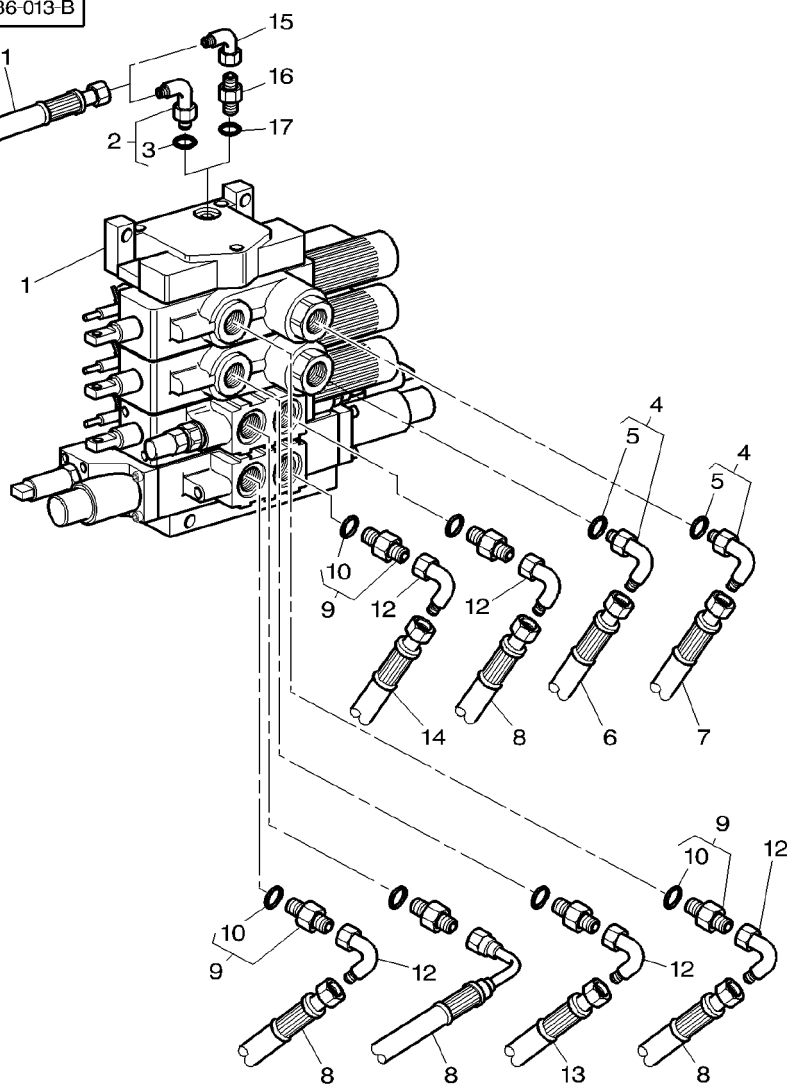

1	3716394M93		**1**	DISTRIBUTOR	DISTRIBUTEUR DISTRIBUTORE VERTEILER DISTRIBUIDOR
2	**357197X91**	➡| H321001	**1**	ELBOW	COUDE GOMITO WINKELSTUECK CODO
3	831452M1	2	**1**	O RING	JOINT TORIQUE ANELLO OR O−RING JUNTA TORICA
4	380031X91	7/88−14	**2**	UNION	RACCORD RACCORDO VERSCHRAUBUNG RACOR
5	1882958M1	4	**1**	O RING	JOINT TORIQUE ANELLO OR O−RING JUNTA TORICA
6	3583591M1	◀▶ 690MM	**1**	HYDR HOSE	FLEXIBLE TUBOFLEX IDRAUL HYDR SCHLAUCH TUBO HIDRAULICO
7	3714953M1	◀▶ 600MM	**1**	HYDR HOSE	FLEXIBLE TUBOFLEX IDRAUL HYDR SCHLAUCH TUBO HIDRAULICO
8	3712540M1	◀▶ 650MM	**4**	HYDR HOSE	FLEXIBLE TUBOFLEX IDRAUL HYDR SCHLAUCH TUBO HIDRAULICO
9	835013M91		**6**	UNION	RACCORD RACCORDO VERSCHRAUBUNG RACOR
10	1882958M1	9	**1**	O RING	JOINT TORIQUE ANELLO OR O−RING JUNTA TORICA
11	3716398M1	[A]	**1**	HYDR HOSE	FLEXIBLE TUBOFLEX IDRAUL HYDR SCHLAUCH TUBO HIDRAULICO
11	3792042M1	[B] ◀▶ 1400MM	**1**	HYDR HOSE	FLEXIBLE TUBOFLEX IDRAUL HYDR SCHLAUCH TUBO HIDRAULICO
12	**367386X1**		**5**	ELBOW	COUDE GOMITO WINKELSTUECK CODO
13	3792164M1	◀▶ 900MM	**1**	HYDR HOSE	FLEXIBLE TUBOFLEX IDRAUL HYDR SCHLAUCH TUBO HIDRAULICO
14	3714956M1	◀▶ 600MM	**1**	HYDR HOSE	FLEXIBLE TUBOFLEX IDRAUL HYDR SCHLAUCH TUBO HIDRAULICO
15	364603X1	➡| H321002	**1**	ELBOW	COUDE GOMITO WINKELSTUECK CODO
16	358733X1	➡| H321002	**1**	UNION	RACCORD RACCORDO VERSCHRAUBUNG RACOR
17	831452M1		**1**	O RING	JOINT TORIQUE ANELLO OR O−RING JUNTA TORICA

[A] WITH PUMP 45CC
AVEC POMPE 45CC
MIT PUMPE 45CC
CON POMPA 45CC
CON BOMBA 45CC

[B] WITH PUMP 60CC
AVEC POMPE 60CC
MIT PUMPE 60CC
CON POMPA 60CC
CON BOMBA 60CC

Load Sensing	Auxiliry Distributors Installatio	70-380	3 Distributors
Load Sensing	Montage Distributeurs Auxiliaires		3 Distributeurs
Load Sensing	Zuzatzeinbausverteilers		3 Verteilers
Load Sensing	Installazione Distributori Auxil.		3 Distributori
Load Sensing	Instalacion Distribuidores Auxil.		3 Distribuidores

1-ZP36-003-B

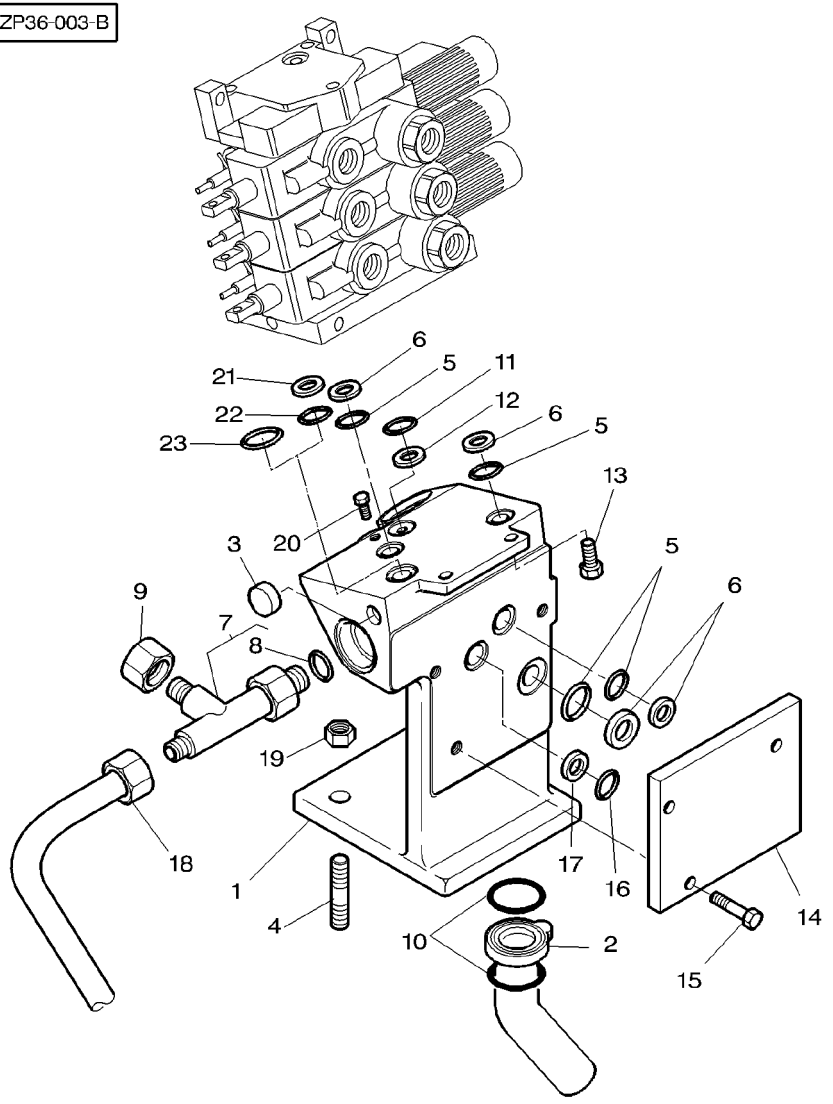

1	3716900M5		1	ANGLE	EQUERRE ANGOLO	WINKEL ANGULO
2	3716914M92		1	TUBE	TUBE TUBO	ROHR TUBO
3	3015150X1	∅ 24MM	2	PLUG	BOUCHON TAPPO	VERSCHL.STOPFEN TAPON
4	3791655M1		3	STUD	GOUJON PRIGIONIERO	STEHBOLZEN ESPARRAGO
5	392224X1		4	O RING	JOINT TORIQUE ANELLO OR	O-RING JUNTA TORICA
6	3791880M1	∅ 22,3 MM	4	BUSH	BAGUE BOCCOLA	BUCHSE CASQUILLO
7	3019633X91		1	UNION	RACCORD RACCORDO	VERSCHRAUBUNG RACOR
8	3019399X1	7	1	O RING	JOINT TORIQUE ANELLO OR	O-RING JUNTA TORICA
9	70922195		1	CAP	CHAPEAU CAPPELLO	KAPPE TAPA
10	366617X1	∅ 47MM	2	O RING	JOINT TORIQUE ANELLO OR	O-RING JUNTA TORICA
11	3791879M1		1	BUSH	BAGUE BOCCOLA	BUCHSE CASQUILLO
12	1441133X1		1	GASKET	JOINT GUARNIZIONE	DICHTSCHEIBE EMPAQUETADURA.
13	3009292X1	M10X25	2	SCREW	VIS VITE	SCHRAUBE TORNILLO
14	3716325M1	[B]	1	PLATE	PLAQUE PIASTRA	PLATTE PLATO
15	339123X1	M8X20	3	SCREW METRIC	VIS METRIQUE VITE METRICA	SCHRAUBE METR TORNILLO METRICO
16	1442477X1		1	GASKET	JOINT GUARNIZIONE	DICHTSCHEIBE EMPAQUETADURA.
17	3791884M2		1	BUSH	BAGUE BOCCOLA	BUCHSE CASQUILLO
18	3716397M1	[A]	1	TUBE	TUBE TUBO	ROHR TUBO
18	3791709M1	[C]	1	TUBE	TUBE TUBO	ROHR TUBO
19	3019862X1	M12	3	NUT METRIC	ECROU METRIQUE DADO METRICO	MUTTER METRISCH TUERCA METRICO
20	3010812X1	M8X30	1	SCREW	VIS VITE	SCHRAUBE TORNILLO
21	3791880M1	➡| H328037	1	BUSH	BAGUE BOCCOLA	BUCHSE CASQUILLO
22	392224X1	➡| H328037	1	O RING	JOINT TORIQUE ANELLO OR	O-RING JUNTA TORICA
23	3010980X1	|➡ H328038 ∅ 25,07MM	1	O RING	JOINT TORIQUE ANELLO OR	O-RING JUNTA TORICA

Load Sensing	Auxiliry Distributors Installatio	70-380	3 Distributors
Load Sensing	Montage Distributeurs Auxiliaires		3 Distributeurs
Load Sensing	Zuzatzeinbausverteilers		3 Verteilers
Load Sensing	Installazione Distributori Auxil.		3 Distributori
Load Sensing	Instalacion Distribuidores Auxil.		3 Distribuidores

1-ZP36-003-B

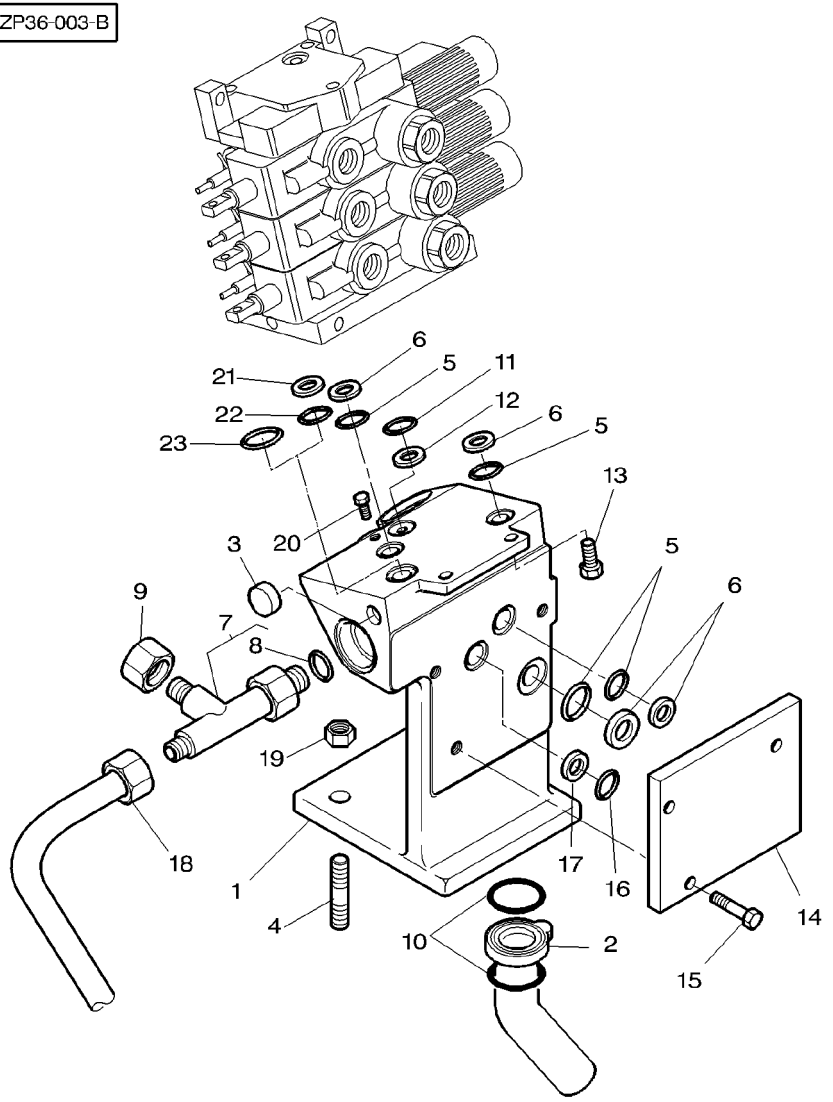

[A] WITH PUMP 45CC
AVEC POMPE 45CC
MIT PUMPE 45CC
CON POMPA 45CC
CON BOMBA 45CC

[B] WITHOUT HYDRAULIC LIFT
SANS RELEVAGE
OHNE HYDRAULIK
SENZA IDRAULICO
SIN HIDRAULICO

[C] WITH PUMP 60CC
AVEC POMPE 60CC
MIT PUMPE 60CC
CON POMPA 60CC
CON BOMBA 60CC

Load Sensing	Auxiliry Distributors Installatio	70-385	4 Distributors
Load Sensing	Montage Distributeurs Auxiliaires		4 Distributeurs
Load Sensing	Zuzatzeinbausverteilers		4 Verteilers
Load Sensing	Installazione Distributori Auxil.		4 Distributori
Load Sensing	Instalacion Distribuidores Auxil.		4 Distribuidores

1-ZP36-004-B

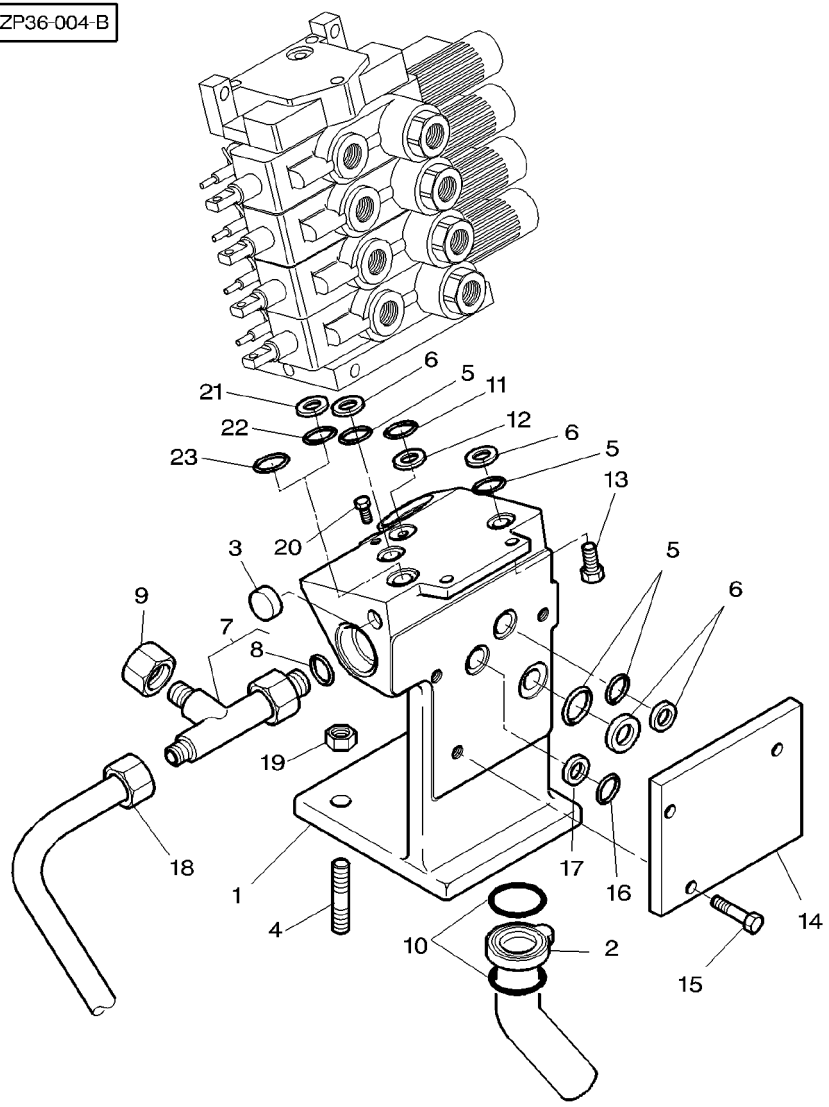

1	3716900M5		1	ANGLE	EQUERRE ANGOLO	WINKEL ANGULO
2	3716914M92		1	TUBE	TUBE TUBO	ROHR TUBO
3	3015150X1	∅ 24MM	2	PLUG	BOUCHON TAPPO	VERSCHL.STOPFEN TAPON
4	3791655M1		3	STUD	GOUJON PRIGIONIERO	STEHBOLZEN ESPARRAGO
5	392224X1		4	O RING	JOINT TORIQUE ANELLO OR	O-RING JUNTA TORICA
6	3791880M1	∅ 22,3 MM	4	BUSH	BAGUE BOCCOLA	BUCHSE CASQUILLO
7	3019633X91		1	UNION	RACCORD RACCORDO	VERSCHRAUBUNG RACOR
8	3019399X1	7	1	O RING	JOINT TORIQUE ANELLO OR	O-RING JUNTA TORICA
9	70922195		1	CAP	CHAPEAU CAPPELLO	KAPPE TAPA
10	366617X1	∅ 47MM	2	O RING	JOINT TORIQUE ANELLO OR	O-RING JUNTA TORICA
11	3791879M1		1	BUSH	BAGUE BOCCOLA	BUCHSE CASQUILLO
12	1441133X1		1	GASKET	JOINT GUARNIZIONE	DICHTSCHEIBE EMPAQUETADURA.
13	3009292X1	M10X25	2	SCREW	VIS VITE	SCHRAUBE TORNILLO
14	3716325M1	[B]	1	PLATE	PLAQUE PIASTRA	PLATTE PLATO
15	339123X1	M8X20	3	SCREW METRIC	VIS METRIQUE VITE METRICA	SCHRAUBE METR TORNILLO METRICO
16	1442477X1		1	GASKET	JOINT GUARNIZIONE	DICHTSCHEIBE EMPAQUETADURA.
17	3791884M2		1	BUSH	BAGUE BOCCOLA	BUCHSE CASQUILLO
18	3716397M1	[A]	1	TUBE	TUBE TUBO	ROHR TUBO
18	3791709M1	[C]	1	TUBE	TUBE TUBO	ROHR TUBO
19	3019862X1	M12	3	NUT METRIC	ECROU METRIQUE DADO METRICO	MUTTER METRISCH TUERCA METRICO
20	3010812X1	M8X30	1	SCREW	VIS VITE	SCHRAUBE TORNILLO
21	3791880M1	➡| H328037	1	BUSH	BAGUE BOCCOLA	BUCHSE CASQUILLO
22	392224X1	➡| H328037	1	O RING	JOINT TORIQUE ANELLO OR	O-RING JUNTA TORICA
23	3010980X1	➡ H328038 ∅ 25,07MM	1	O RING	JOINT TORIQUE ANELLO OR	O-RING JUNTA TORICA

1-ZP36-004-B

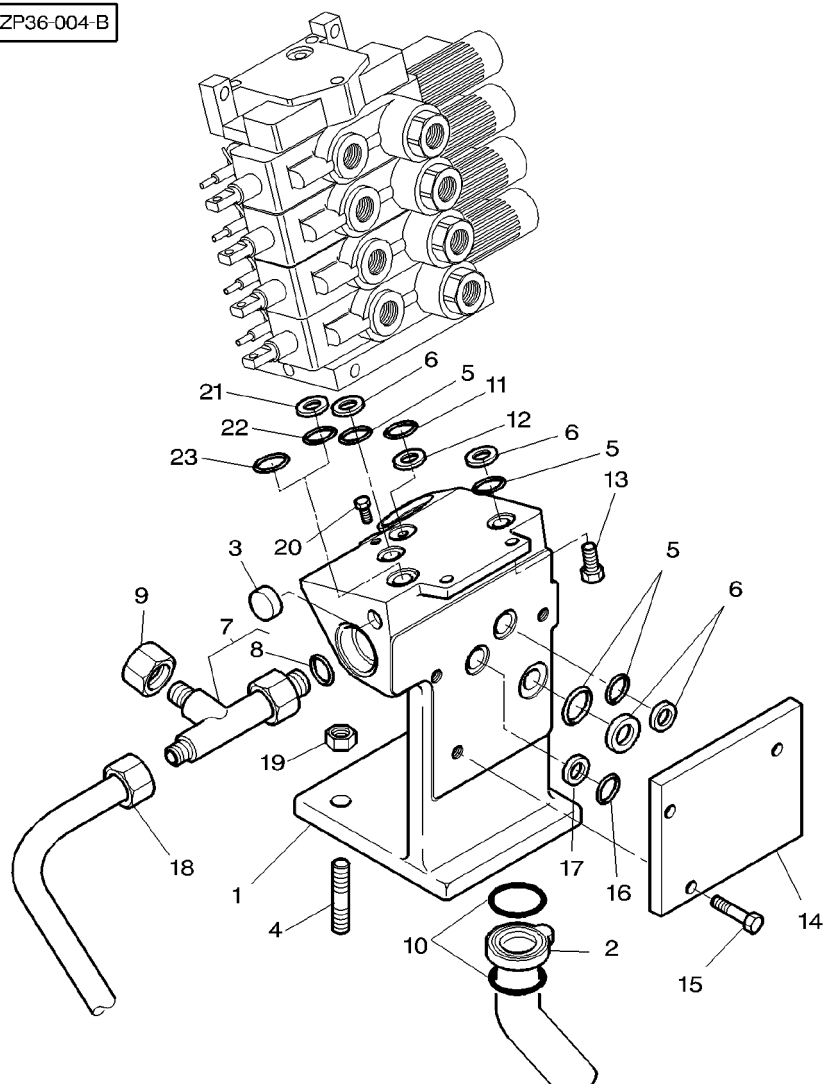

[A] WITH PUMP 45CC
AVEC POMPE 45CC
MIT PUMPE 45CC
CON POMPA 45CC
CON BOMBA 45CC

[B] WITHOUT HYDRAULIC LIFT
SANS RELEVAGE
OHNE HYDRAULIK
SENZA IDRAULICO
SIN HIDRAULICO

[C] WITH PUMP 60CC
AVEC POMPE 60CC
MIT PUMPE 60CC
CON POMPA 60CC
CON BOMBA 60CC

Hydraulic Coupling
Coupleur Hydraulique
Hydr. – Kupplung
Giunto Idraulico
Acoplador Hidraulico

70-390

2 Distributors
2 Distributeurs
2 Verteilers
2 Distributori
2 Distribuidores

1-ZP40-004-A

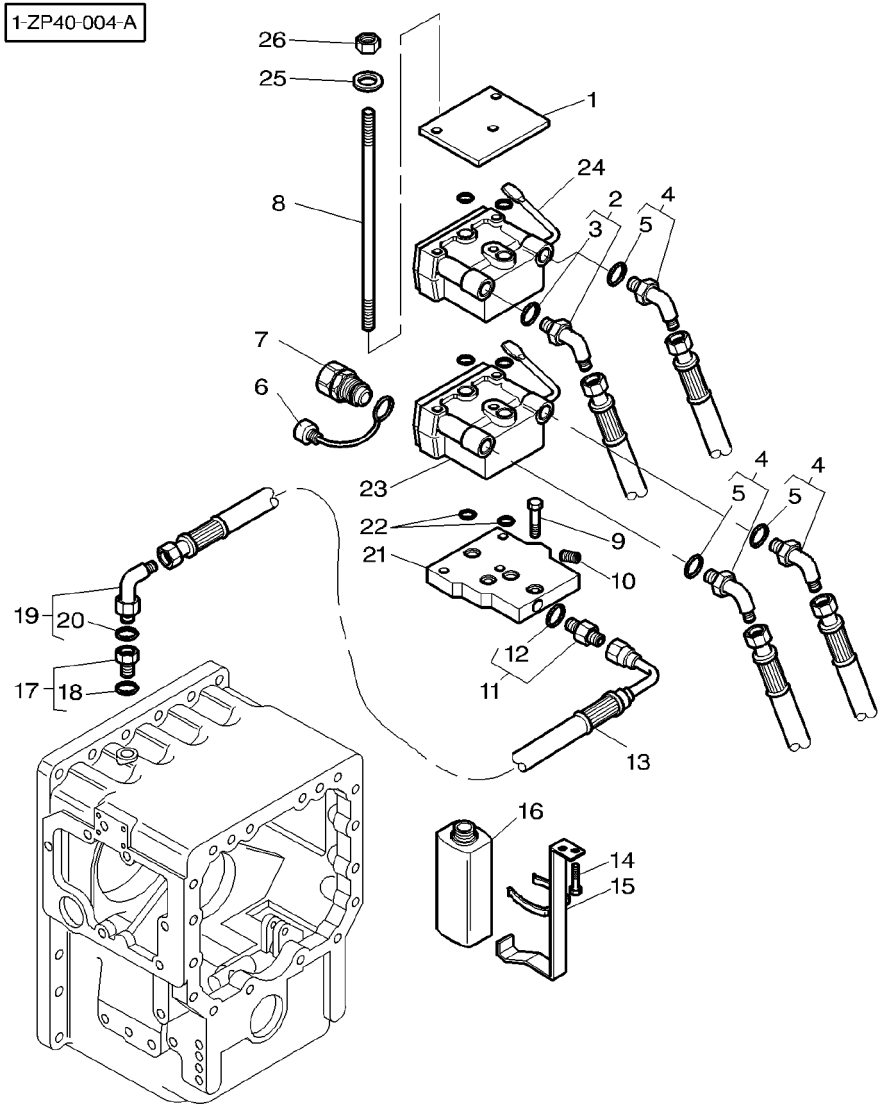

1	3792734M1		**1**	PLATE	PLAQUE PIASTRA	PLATTE PLATO
2	3019592X91		**1**	UNION	RACCORD RACCORDO	VERSCHRAUBUNG RACOR
3	3019396X1	2	**1**	O RING	JOINT TORIQUE ANELLO OR	O-RING JUNTA TORICA
4	3019418X91		**3**	UNION	RACCORD RACCORDO	VERSCHRAUBUNG RACOR
5	3019398X1	4	**1**	O RING	JOINT TORIQUE ANELLO OR	O-RING JUNTA TORICA
6	3615822M1		**4**	CAP	CHAPEAU CAPPELLO	KAPPE TAPA
7	***1026700M91***	3/4-16	**4**	MALE COUPLER	COUPLEUR MALE GIUNTO MASCHIO	KUPPLST.INNEN ACOPLADOR MACHO
7	***3583932M1***	M18	**4**	MALE COUPLER	COUPLEUR MALE GIUNTO MASCHIO	KUPPLST.INNEN ACOPLADOR MACHO
8	3793410M2	M8X173	**3**	STUD	GOUJON PRIGIONIERO	STEHBOLZEN ESPARRAGO
9	339123X1	M8X20	**2**	SCREW METRIC	VIS METRIQUE VITE METRICA	SCHRAUBE METR TORNILLO METRICO
10	3791352M1		**1**	PLUG	BOUCHON TAPPO	VERSCHL.STOPFEN TAPON
11	3019660X91		**1**	UNION	RACCORD RACCORDO	VERSCHRAUBUNG RACOR
12	3019393X1	11	**1**	O RING	JOINT TORIQUE ANELLO OR	O-RING JUNTA TORICA
13	3792750M1		**1**	HYDR HOSE	FLEXIBLE TUBOFLEX IDRAUL	HYDR SCHLAUCH TUBO HIDRAULICO
14	3009270X1	M5X10	**2**	SCREW METRIC	VIS METRIQUE VITE METRICA	SCHRAUBE METR TORNILLO METRICO
15	3792769M91		**1**	SUPPORT	SUPPORT SUPPORTO	LAGERUNG DISPOS.DE SOSTEN
16	3792741M1		**1**	CAN	BIDON BIDONE	KANNE BIDON
17	3792739M1		**1**	PLUG	BOUCHON TAPPO	VERSCHL.STOPFEN TAPON
18	3019399X1	17	**1**	O RING	JOINT TORIQUE ANELLO OR	O-RING JUNTA TORICA
19	3019302X91		**1**	UNION	RACCORD RACCORDO	VERSCHRAUBUNG RACOR
20	3019393X1	19	**1**	O RING	JOINT TORIQUE ANELLO OR	O-RING JUNTA TORICA
21	3792745M1		**1**	SUPPORT	SUPPORT SUPPORTO	LAGERUNG DISPOS.DE SOSTEN
22	3007432X1		**6**	O RING	JOINT TORIQUE ANELLO OR	O-RING JUNTA TORICA
23	***3792559M1***	[A]	**1**	FEMALE COUPLER	COUPLEUR FEMELLE GIUNTO FEMMINA	KUPPLST.AUSSEN ACOPLADOR HEMBRA
24	***3792561M1***	[B]	**1**	FEMALE COUPLER	COUPLEUR FEMELLE GIUNTO FEMMINA	KUPPLST.AUSSEN ACOPLADOR HEMBRA
25	390972X1		**3**	WASHER METRIC	RONDELLE METR. RONDELLA METRICO	SCHEIBE METRISCH ARANDELA METRICO

Hydraulic Coupling
Coupleur Hydraulique
Hydr. – Kupplung
Giunto Idraulico
Acoplador Hidraulico

70-390

2 Distributors
2 Distributeurs
2 Verteilers
2 Distributori
2 Distribuidores

1-ZP40-004-A

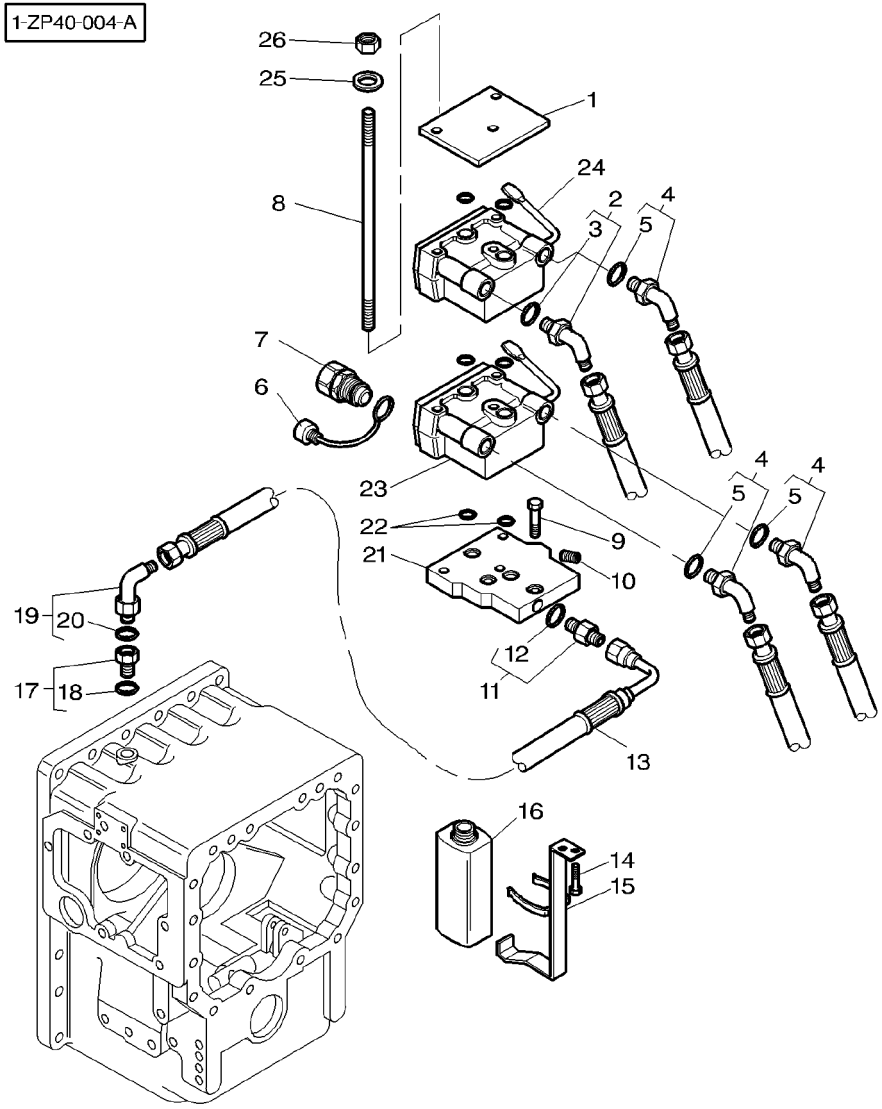

26 339169X1

3 NUT METRIC — ECROU METRIQUE — DADO METRICO — MUTTER METRISCH — TUERCA METRICO

[A] BLACK
NOIR
SCHWARZ
NERO
NEGRO

[B] RED
ROUGE
ROT
ROSSO
ROJO

Hydraulic Coupling
Coupleur Hydraulique
Hydr. – Kupplung
Giunto Idraulico
Acoplador Hidraulico

70-395

3 Distributors
3 Distributeurs
3 Verteilers
3 Distributori
3 Distribuidores

1-ZP40-001-B

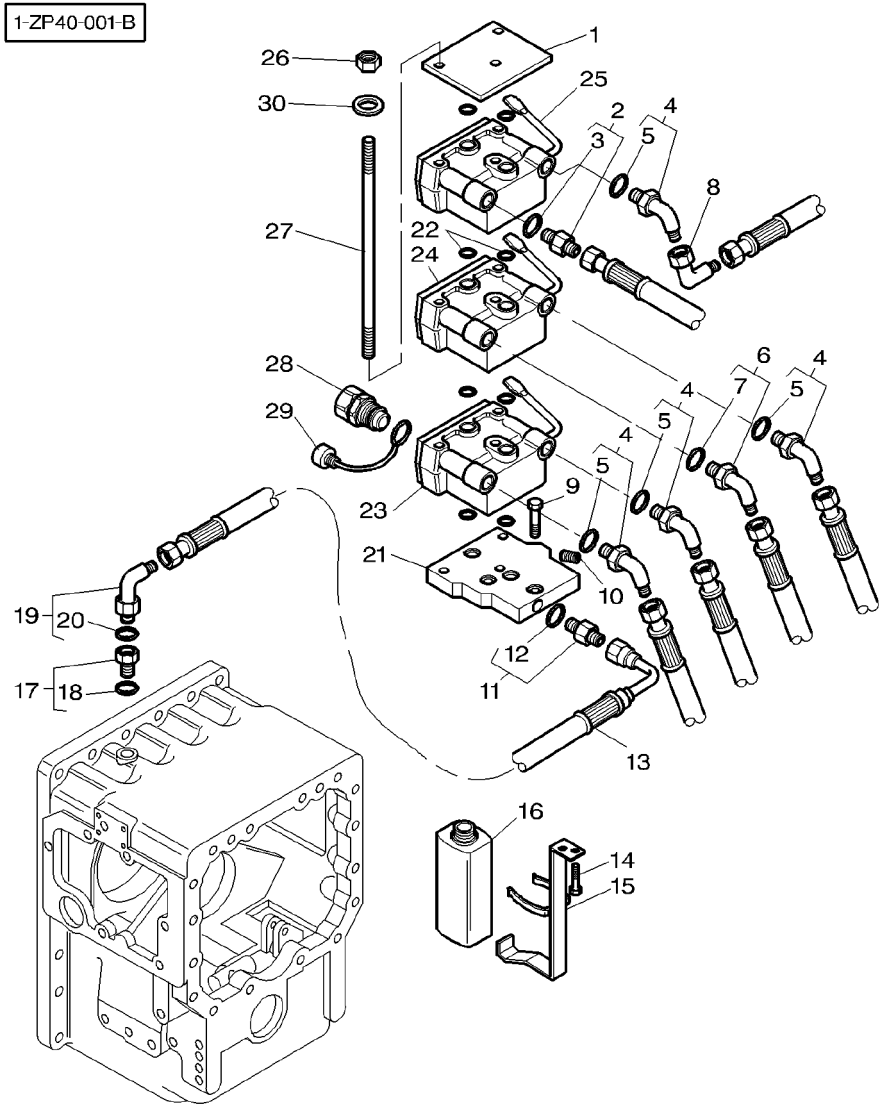

1	3792734M1		**1**	PLATE	PLAQUE PIASTRA PLATTE PLATO
2	3019387X91		**1**	UNION	RACCORD RACCORDO VERSCHRAUBUNG RACOR
3	3019398X1	2	**1**	O RING	JOINT TORIQUE ANELLO OR O–RING JUNTA TORICA
4	3019418X91		**4**	UNION	RACCORD RACCORDO VERSCHRAUBUNG RACOR
5	3019398X1	4	**1**	O RING	JOINT TORIQUE ANELLO OR O–RING JUNTA TORICA
6	3019592X91		**1**	UNION	RACCORD RACCORDO VERSCHRAUBUNG RACOR
7	3019396X1	6	**1**	O RING	JOINT TORIQUE ANELLO OR O–RING JUNTA TORICA
8	**367386X1**		**1**	ELBOW	COUDE GOMITO WINKELSTUECK CODO
9	339123X1	M8X20	**2**	SCREW METRIC	VIS METRIQUE VITE METRICA SCHRAUBE METR TORNILLO METRICO
10	3791352M1		**1**	PLUG	BOUCHON TAPPO VERSCHL.STOPFEN TAPON
11	3019660X91		**1**	UNION	RACCORD RACCORDO VERSCHRAUBUNG RACOR
12	3019393X1	11	**1**	O RING	JOINT TORIQUE ANELLO OR O–RING JUNTA TORICA
13	3792750M1		**1**	HYDR HOSE	FLEXIBLE TUBOFLEX IDRAUL HYDR SCHLAUCH TUBO HIDRAULICO
14	3009270X1	M5X10	**2**	SCREW METRIC	VIS METRIQUE VITE METRICA SCHRAUBE METR TORNILLO METRICO
15	3792769M91		**1**	SUPPORT	SUPPORT SUPPORTO LAGERUNG DISPOS.DE SOSTEN
16	3792741M1		**1**	CAN	BIDON BIDONE KANNE BIDON
17	3792739M1		**1**	PLUG	BOUCHON TAPPO VERSCHL.STOPFEN TAPON
18	3019399X1	17	**1**	O RING	JOINT TORIQUE ANELLO OR O–RING JUNTA TORICA
19	3019302X91		**1**	UNION	RACCORD RACCORDO VERSCHRAUBUNG RACOR
20	3019393X1	19	**1**	O RING	JOINT TORIQUE ANELLO OR O–RING JUNTA TORICA
21	3792745M1		**1**	SUPPORT	SUPPORT SUPPORTO LAGERUNG DISPOS.DE SOSTEN
22	3007432X1		**8**	O RING	JOINT TORIQUE ANELLO OR O–RING JUNTA TORICA
23	***3792559M1***	[A]	**1**	FEMALE COUPLER	COUPLEUR FEMELLE GIUNTO FEMMINA KUPPLST.AUSSEN ACOPLADOR HEMBRA
24	***3792561M1***	[B]	**1**	FEMALE COUPLER	COUPLEUR FEMELLE GIUNTO FEMMINA KUPPLST.AUSSEN ACOPLADOR HEMBRA
25	***3792562M1***	[C]	**1**	FEMALE COUPLER	COUPLEUR FEMELLE GIUNTO FEMMINA KUPPLST.AUSSEN ACOPLADOR HEMBRA
26	339169X1		**3**	NUT METRIC	ECROU METRIQUE DADO METRICO MUTTER METRISCH TUERCA METRICO

Hydraulic Coupling
Coupleur Hydraulique
Hydr. – Kupplung
Giunto Idraulico
Acoplador Hidraulico

70-395

3 Distributors
3 Distributeurs
3 Verteilers
3 Distributori
3 Distribuidores

1-ZP40-001-B

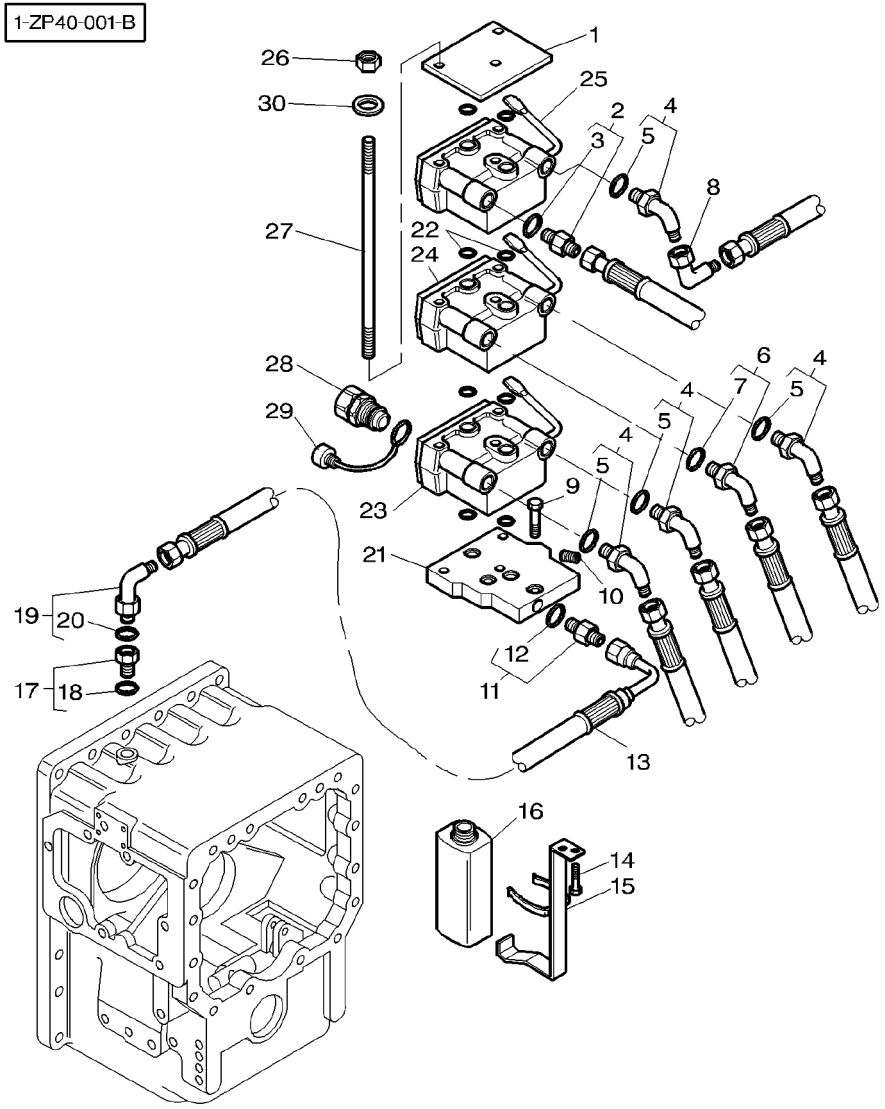

27	3792751M2	M8X243	**3**	STUD	GOUJON PRIGIONIERO ESPARRAGO	STEHBOLZEN ESPARRAGO
28	***1026700M91***	3/4–16	**6**	MALE COUPLER	COUPLEUR MALE GIUNTO MASCHIO	KUPPLST.INNEN ACOPLADOR MACHO
28	***3583932M1***	M18	**6**	MALE COUPLER	COUPLEUR MALE GIUNTO MASCHIO	KUPPLST.INNEN ACOPLADOR MACHO
29	3615822M1		**6**	CAP	CHAPEAU CAPPELLO	KAPPE TAPA
30	390972X1		**3**	WASHER METRIC	RONDELLE METR. RONDELLA METRICO	SCHEIBE METRISCH ARANDELA METRICO

[A] BLACK
NOIR
SCHWARZ
NERO
NEGRO

[B] RED
ROUGE
ROT
ROSSO
ROJO

[C] GREEN
VERT
GRUEN
VERDE
VERDE

Hydraulic Coupling
Coupleur Hydraulique
Hydr. − Kupplung
Giunto Idraulico
Acoplador Hidraulico

70-400

4 Distributors
4 Distributeurs
4 Verteilers
4 Distributori
4 Distribuidores

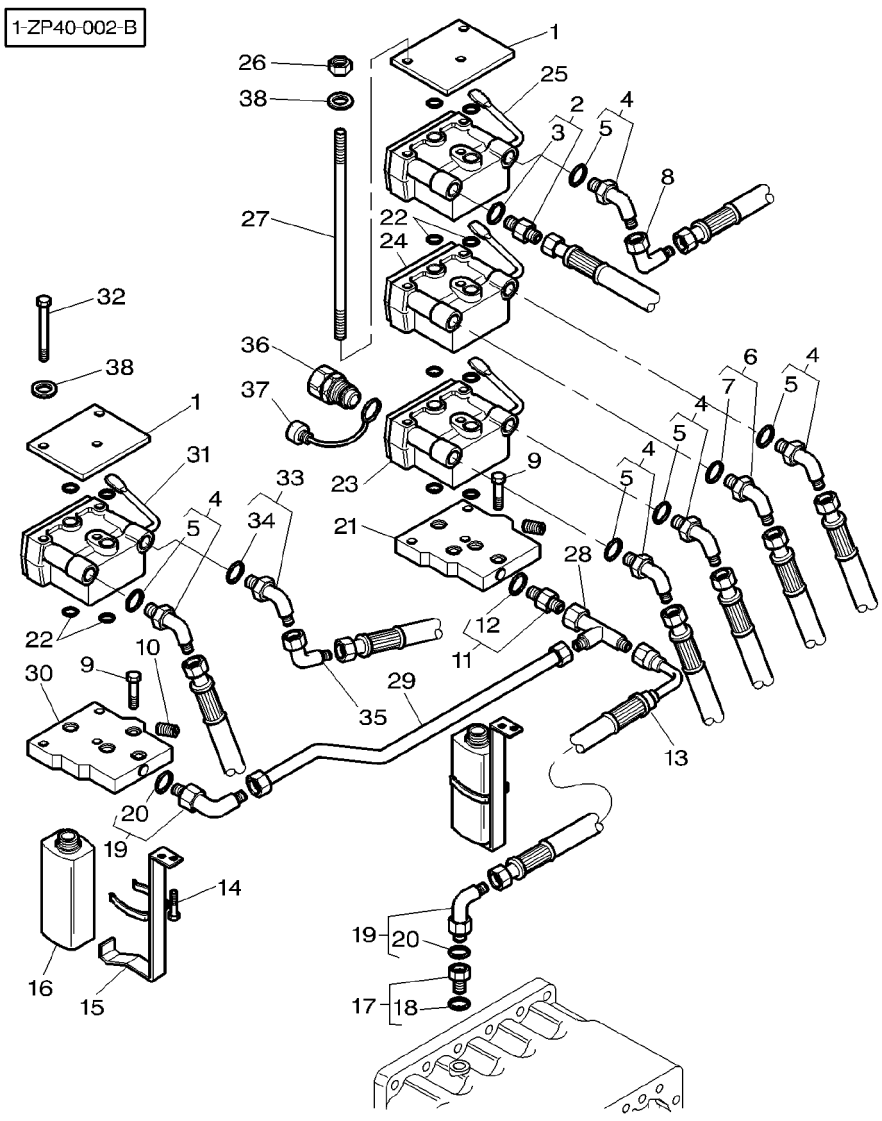

1	3792734M1		**2**	PLATE	PLAQUE PIASTRA	PLATTE PLATO
2	3019387X91		**1**	UNION	RACCORD RACCORDO	VERSCHRAUBUNG RACOR
3	3019398X1	2	**1**	O RING	JOINT TORIQUE ANELLO OR	O−RING JUNTA TORICA
4	3019418X91		**5**	UNION	RACCORD RACCORDO	VERSCHRAUBUNG RACOR
5	3019398X1	4	**1**	O RING	JOINT TORIQUE ANELLO OR	O−RING JUNTA TORICA
6	3019592X91		**1**	UNION	RACCORD RACCORDO	VERSCHRAUBUNG RACOR
7	3019396X1	6	**1**	O RING	JOINT TORIQUE ANELLO OR	O−RING JUNTA TORICA
8	**367386X1**		**1**	ELBOW	COUDE GOMITO	WINKELSTUECK CODO
9	339123X1	M8X20	**4**	SCREW METRIC	VIS METRIQUE VITE METRICA	SCHRAUBE METR TORNILLO METRICO
10	3791352M1		**2**	PLUG	BOUCHON TAPPO	VERSCHL.STOPFEN TAPON
11	3019660X91		**1**	UNION	RACCORD RACCORDO	VERSCHRAUBUNG RACOR
12	3019393X1	11	**1**	O RING	JOINT TORIQUE ANELLO OR	O−RING JUNTA TORICA
13	3792750M1		**1**	HYDR HOSE	FLEXIBLE TUBOFLEX IDRAUL	HYDR SCHLAUCH TUBO HIDRAULICO
14	3009270X1	M5X10	**4**	SCREW METRIC	VIS METRIQUE VITE METRICA	SCHRAUBE METR TORNILLO METRICO
15	3792769M91		**2**	SUPPORT	SUPPORT SUPPORTO	LAGERUNG DISPOS.DE SOSTEN
16	3792741M1		**2**	CAN	BIDON BIDONE	KANNE BIDON
17	3792739M1		**1**	PLUG	BOUCHON TAPPO	VERSCHL.STOPFEN TAPON
18	3019399X1	17	**1**	O RING	JOINT TORIQUE ANELLO OR	O−RING JUNTA TORICA
19	3019302X91		**2**	UNION	RACCORD RACCORDO	VERSCHRAUBUNG RACOR
20	3019393X1	19	**1**	O RING	JOINT TORIQUE ANELLO OR	O−RING JUNTA TORICA
21	3792745M1		**1**	SUPPORT	SUPPORT SUPPORTO	LAGERUNG DISPOS.DE SOSTEN
22	3007432X1		**12**	O RING	JOINT TORIQUE ANELLO OR	O−RING JUNTA TORICA
23	***3792559M1***	[A]	**1**	FEMALE COUPLER	COUPLEUR FEMELLE GIUNTO FEMMINA	KUPPLST.AUSSEN ACOPLADOR HEMBRA
24	***3792561M1***	[B]	**1**	FEMALE COUPLER	COUPLEUR FEMELLE GIUNTO FEMMINA	KUPPLST.AUSSEN ACOPLADOR HEMBRA
25	***3792562M1***	[C]	**1**	FEMALE COUPLER	COUPLEUR FEMELLE GIUNTO FEMMINA	KUPPLST.AUSSEN ACOPLADOR HEMBRA
26	339169X1		**3**	NUT METRIC	ECROU METRIQUE DADO METRICO	MUTTER METRISCH TUERCA METRICO

Hydraulic Coupling
Coupleur Hydraulique
Hydr. − Kupplung
Giunto Idraulico
Acoplador Hidraulico

70-400

4 Distributors
4 Distributeurs
4 Verteilers
4 Distributori
4 Distribuidores

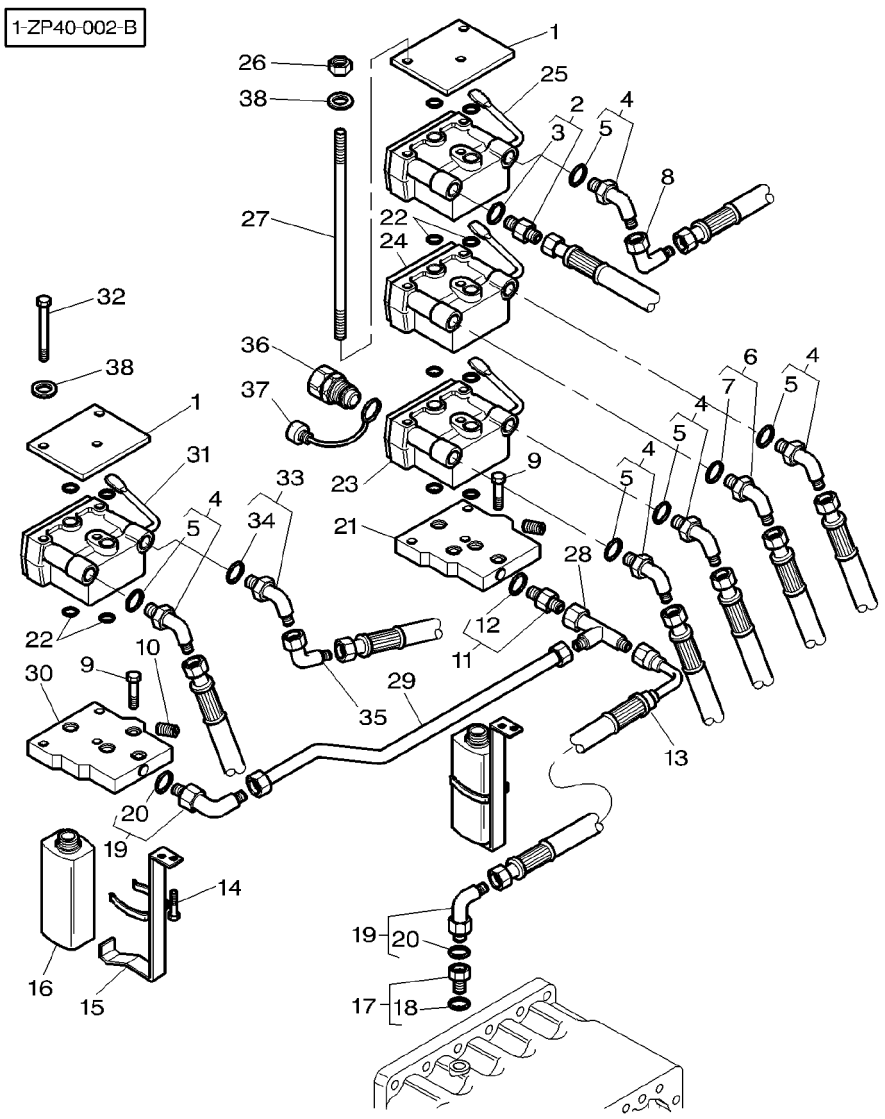

27	3792751M2	M8X243	**3**	STUD	GOUJON PRIGIONIERO	STEHBOLZEN ESPARRAGO
28	373796X1		**1**	TEEPIECE	TE RACCORDO A T	T−STUECK PIEZA EN T
29	3792720M91		**1**	TUBE	TUBE TUBO	ROHR TUBO
30	3792747M1		**1**	SUPPORT	SUPPORT SUPPORTO	LAGERUNG DISPOS.DE SOSTEN
31	***3792563M1***	[D]	**1**	FEMALE COUPLER	COUPLEUR FEMELLE GIUNTO FEMMINA	KUPPLST.AUSSEN ACOPLADOR HEMBRA
32	339136X1	M8X90	**3**	BOLT	BOULON BULLONE	MASCH.SCHRAUBE PERNO
33	3019592X91		**1**	UNION	RACCORD RACCORDO	VERSCHRAUBUNG RACOR
34	3019396X1	33	**1**	O RING	JOINT TORIQUE ANELLO OR	O−RING JUNTA TORICA
35	373784X1		**1**	ELBOW	COUDE GOMITO	WINKELSTUECK CODO
36	***1026700M91***	3/4−16	**8**	MALE COUPLER	COUPLEUR MALE GIUNTO MASCHIO	KUPPLST.INNEN ACOPLADOR MACHO
36	***3583932M1***	M18	**8**	MALE COUPLER	COUPLEUR MALE GIUNTO MASCHIO	KUPPLST.INNEN ACOPLADOR MACHO
37	3615822M1		**8**	CAP	CHAPEAU CAPPELLO	KAPPE TAPA
38	390972X1		**6**	WASHER METRIC	RONDELLE METR. RONDELLA METRICO	SCHEIBE METRISCH ARANDELA METRICO

[A] BLACK
NOIR
SCHWARZ
NERO
NEGRO

[B] RED
ROUGE
ROT
ROSSO
ROJO

[C] GREEN
VERT
GRUEN
VERDE
VERDE

[D] YELLOW
JAUNE
GELB
GIALLO
AMARILLO

Hydraulic Coupling
Coupleur Hydraulique
Hydr. − Kupplung
Giunto Idraulico
Acoplador Hidraulico

70-405

1-ZP40-003-A

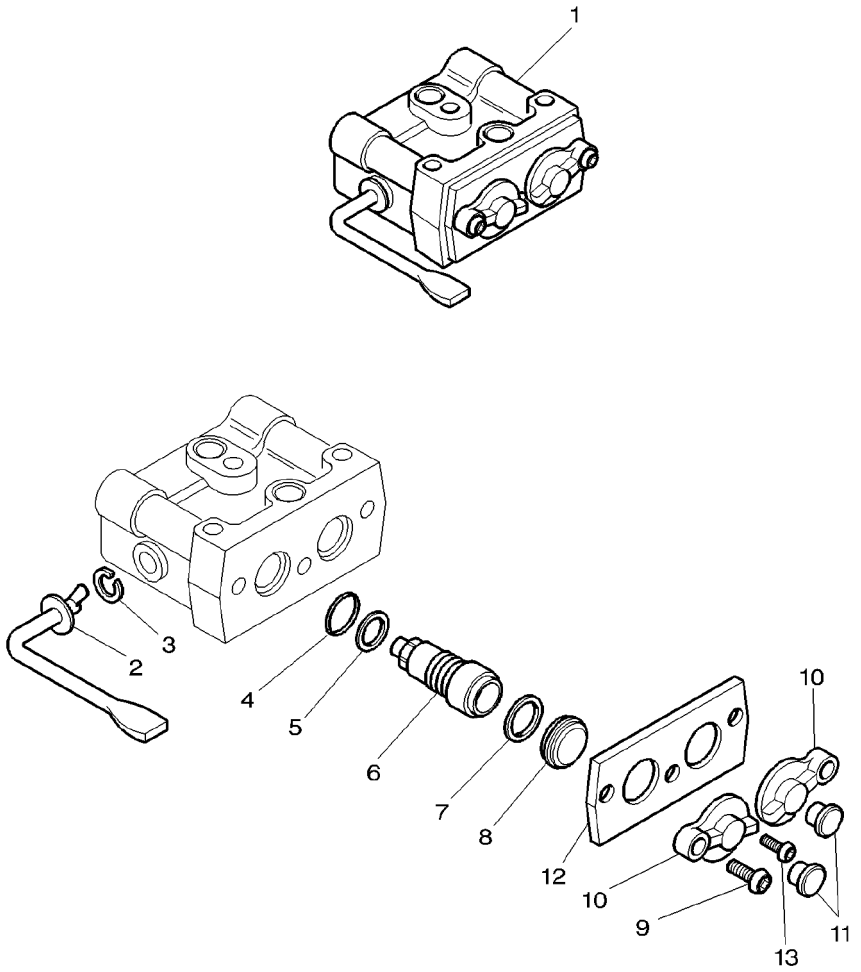

1	***3792559M1***	[A]	
1	***3792561M1***	[B]	
1	***3792562M1***	[C]	
1	***3792563M1***	[D]	
2	3903463M91	1	
3	3903462M1	1	
4	3903465M1	1	
5	3903464M1	1	
6	3903461M91	1	
7	3903460M1	1	
8	3903459M1	1	
9	3903455M1	1	
10	3903456M1	1	
11	3903467M1	1	[A]
11	3903468M1	1	[B]
11	3903466M1	1	[C]
11	3903454M1	1	[D]
12	3903458M1	1	
13	3903457M1	1	

[A] BLACK
NOIR
SCHWARZ
NERO
NEGRO

[B] RED
ROUGE
ROT
ROSSO
ROJO

1	FEMALE COUPLER	COUPLEUR FEMELLE GIUNTO FEMMINA	KUPPLST.AUSSEN ACOPLADOR HEMBRA
1	FEMALE COUPLER	COUPLEUR FEMELLE GIUNTO FEMMINA	KUPPLST.AUSSEN ACOPLADOR HEMBRA
1	FEMALE COUPLER	COUPLEUR FEMELLE GIUNTO FEMMINA	KUPPLST.AUSSEN ACOPLADOR HEMBRA
1	FEMALE COUPLER	COUPLEUR FEMELLE GIUNTO FEMMINA	KUPPLST.AUSSEN ACOPLADOR HEMBRA
1	LEVER	LEVIER LEVA	HEBEL PALANCA
1	CIRCLIP	SEGMENT D ARRET ANELLO D'ARRESTO	SICHERUNGSRING CIRCULITO
2	GASKET	JOINT GUARNIZIONE	DICHTSCHEIBE EMPAQUETADURA.
2	GASKET	JOINT GUARNIZIONE	DICHTSCHEIBE EMPAQUETADURA.
2	FEMALE COUPLER	COUPLEUR FEMELLE GIUNTO FEMMINA	KUPPLST.AUSSEN ACOPLADOR HEMBRA
2	CLIP	CLIP FERMAGLIO	SCHELLE CRAPA RETEN
2	SEAL	JOINT ETANCHEITE PARAOLIO	DICHTRING RETEN
2	SCREW	VIS VITE	SCHRAUBE TORNILLO
2	TAP	OBTURATEUR TAPPO*	HAHN GRIFO
2	PLUG	BOUCHON TAPPO	VERSCHL.STOPFEN TAPON
2	PLUG	BOUCHON TAPPO	VERSCHL.STOPFEN TAPON
2	PLUG	BOUCHON TAPPO	VERSCHL.STOPFEN TAPON
2	PLUG	BOUCHON TAPPO	VERSCHL.STOPFEN TAPON
1	PLATE	PLAQUE PIASTRA	PLATTE PLATO
1	SCREW	VIS VITE	SCHRAUBE TORNILLO

1-ZP40-003-A

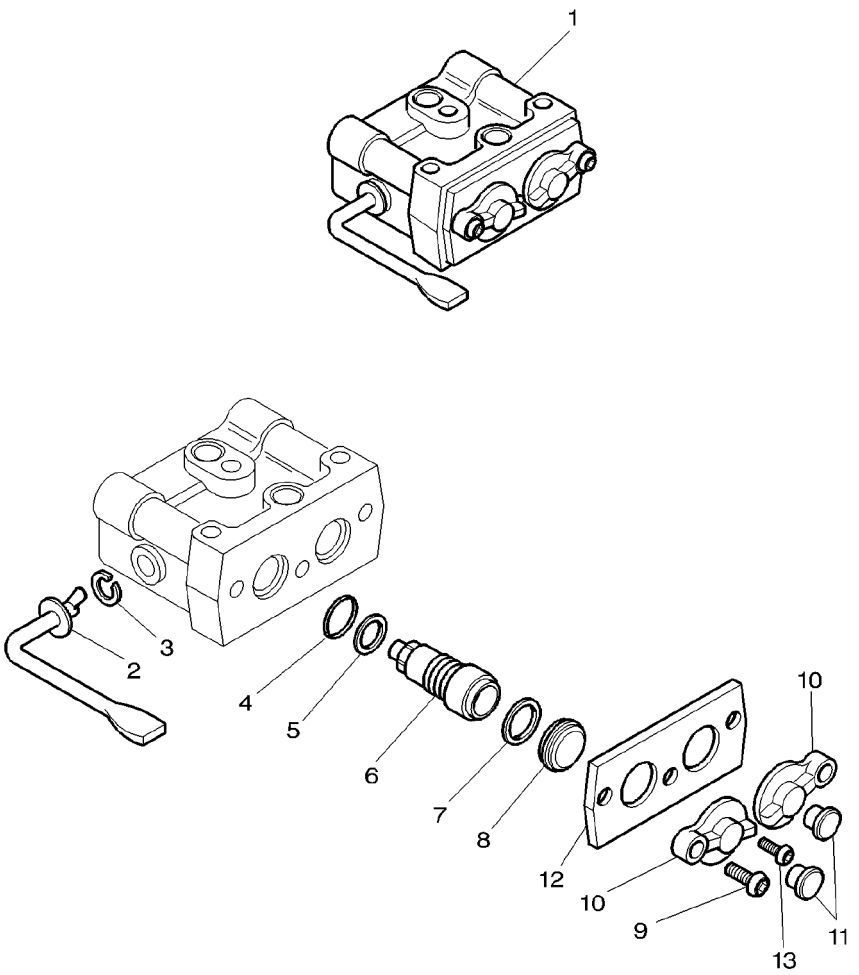

[C] GREEN
VERT
GRUEN
VERDE
VERDE

[D] YELLOW
JAUNE
GELB
GIALLO
AMARILLO

Dipstick / Centre Housing
Jauge / Carter Central
Messtab / Zentralgehaeuse
Asta Livello / Centrale Carcassa
Varilla Aceite / Alojamiento Centro

70-410

1-ZP77-001-B

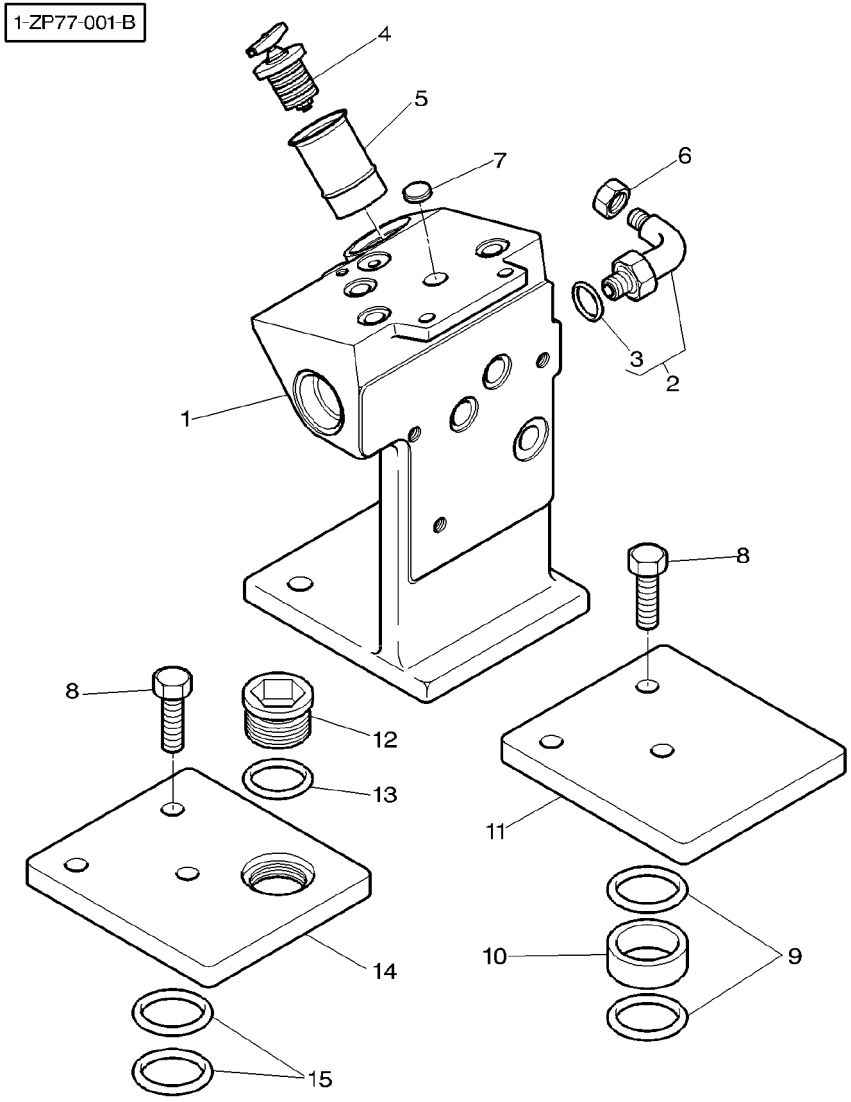

1	3716900M5		
2	3019420X91		
3	3019398X1	2	
4	3791288M1		
5	3791466M2		
6	355782X1		
7	391563X1	∅ 16MM	
8	3009507X1	[A] M12X35	
9	366617X1	[A] ∅ 47MM ➡| 01/10/2000	
10	3792280M1	[A] ➡| 01/10/2000	
11	3716396M1	[A] ➡| 01/10/2000	
12	3019438X1	[A] ➡ 02/10/2000	
13	391265X1	[A] ➡ 02/10/2000	
14	3716396M2	[A] ➡ 02/10/2000	
15	3015474X1	[A] ➡ 02/10/2000	

[A] WITHOUT DISTRIBUTOR
SANS DISTRIBUTEUR
OHNE VERTEILER
SENZA DISTRIBUTORE
SIN DISTRIBUIDOR

1	ANGLE	EQUERRE ANGOLO	WINKEL ANGULO
1	UNION	RACCORD RACCORDO	VERSCHRAUBUNG RACOR
1	O RING	JOINT TORIQUE ANELLO OR	O-RING JUNTA TORICA
1	PLUG	BOUCHON TAPPO	VERSCHL.STOPFEN TAPON
1	TUBE	TUBE TUBO	ROHR TUBO
1	PLUG	BOUCHON TAPPO	VERSCHL.STOPFEN TAPON
1	PLUG	BOUCHON TAPPO	VERSCHL.STOPFEN TAPON
3	SCREW METRIC	VIS METRIQUE VITE METRICA	SCHRAUBE METR TORNILLO METRICO
2	O RING	JOINT TORIQUE ANELLO OR	O-RING JUNTA TORICA
1	COLLAR	COLLERETTE COLLARE	FLANSCHRING COLLAR
1	PLATE	PLAQUE PIASTRA	PLATTE PLATO
1	PLUG	BOUCHON TAPPO	VERSCHL.STOPFEN TAPON
1	GASKET	JOINT GUARNIZIONE	DICHTSCHEIBE EMPAQUETADURA.
1	PLATE	PLAQUE PIASTRA	PLATTE PLATO
2	O RING	JOINT TORIQUE ANELLO OR	O-RING JUNTA TORICA

2 Distributors Control
Commande Avec 2 Distributeurs
Antrieb Mit 2 Verteilers
Comandi Con 2 Distributors
Mando Con 2 Distribuidors

70-415

➡| **H351014**

1-ZP39-002-A

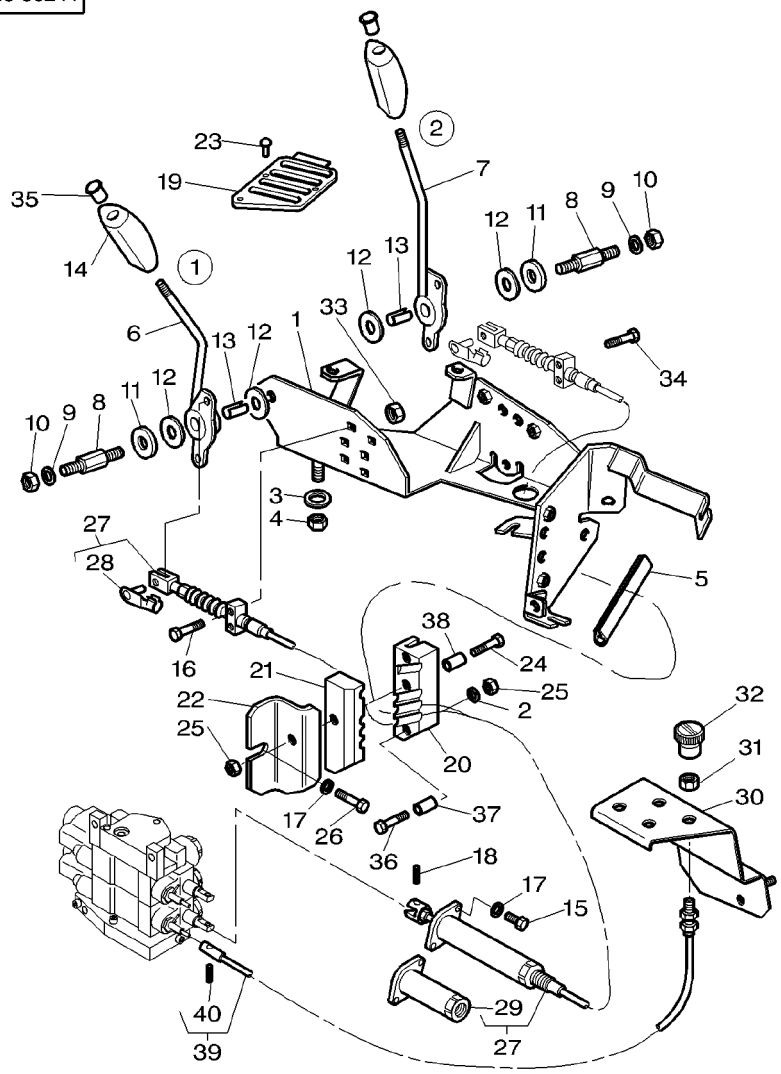

1	3778480M91		**1**	SUPPORT	SUPPORT SUPPORTO	LAGERUNG DISPOS.DE SOSTEN
2	390971X1		**2**	WASHER METRIC	RONDELLE METR. RONDELLA METRICO	SCHEIBE METRISCH ARANDELA METRICO
3	385361X1		**4**	WASHER METRIC	RONDELLE METR. RONDELLA METRICO	SCHEIBE METRISCH ARANDELA METRICO
4	1441461X1	M8	**4**	NUT METRIC	ECROU METRIQUE DADO METRICO	MUTTER METRISCH TUERCA METRICO
5	1684844M1	◀▶ 80MM	**1**	SEAL	JOINT ETANCHEITE PARAOLIO	DICHTRING RETEN
6	3778481M2		**1**	LEVER	LEVIER LEVA	HEBEL PALANCA
7	3778482M2		**1**	LEVER	LEVIER LEVA	HEBEL PALANCA
8	3712956M3		**2**	CLEVIS PIN	AXE PERNO D'ATTACCO	SPLINTBOLZEN BULON CILINDRICO
9	390972X1		**2**	WASHER METRIC	RONDELLE METR. RONDELLA METRICO	SCHEIBE METRISCH ARANDELA METRICO
10	1441461X1	M8	**2**	NUT METRIC	ECROU METRIQUE DADO METRICO	MUTTER METRISCH TUERCA METRICO
11	3387447M1		**2**	WASHER	RONDELLE RONDELLA	UNTERLEGSCHEIBE ARANDELA
12	3386514M1		**4**	FRICTION DISC	DISQUE FRICTION DISCO DI FRIZION	REIBSCHEIBE DISCO FRICCION
13	3713905M1		**2**	BEARING	COUSSINET CUSCINETTO	LAGER COJINETE
14	3715495M1		**2**	HANDLE	POIGNEE MANIGLIA	HANDGRIFF MANETA
15	357831X1	1/4"−20X16	**4**	SCREW	VIS VITE	SCHRAUBE TORNILLO
16	3009332X1	M6X30	**2**	SCREW	VIS VITE	SCHRAUBE TORNILLO
17	390971X1		**7**	WASHER METRIC	RONDELLE METR. RONDELLA METRICO	SCHEIBE METRISCH ARANDELA METRICO
18	3714223M1		**2**	CLEVIS PIN	AXE PERNO D'ATTACCO	SPLINTBOLZEN BULON CILINDRICO
19	3778486M1		**1**	GRILLE	GRILLE GRIGLIA	GRILL REJILLA
20	3712979M2		**1**	BRIDLE	BRIDE BRIGLIA	SPANNBAND BRIDA
21	3712980M2		**1**	BRIDLE	BRIDE BRIGLIA	SPANNBAND BRIDA
22	3712981M2		**1**	ANGLE	EQUERRE ANGOLO	WINKEL ANGULO
23	**3010506X1**	M5X16	**7**	SCREW	VIS VITE	SCHRAUBE TORNILLO
24	339096X1	M6X35	**2**	BOLT METRIC	BOULON METRIQUE BULLONE METRICO	MASCH.SCHRB MET PERNO METRICO
25	339030X1		**3**	NUT METRIC	ECROU METRIQUE DADO METRICO	MUTTER METRISCH TUERCA METRICO
26	339560X1	M6X16	**1**	SCREW METRIC	VIS METRIQUE VITE METRICA	SCHRAUBE METR TORNILLO METRICO

2 Distributors Control
Commande Avec 2 Distributeurs
Antrieb Mit 2 Verteilers
Comandi Con 2 Distributors
Mando Con 2 Distribuidors

70-415

➡| **H351014**

1-ZP39-002-A

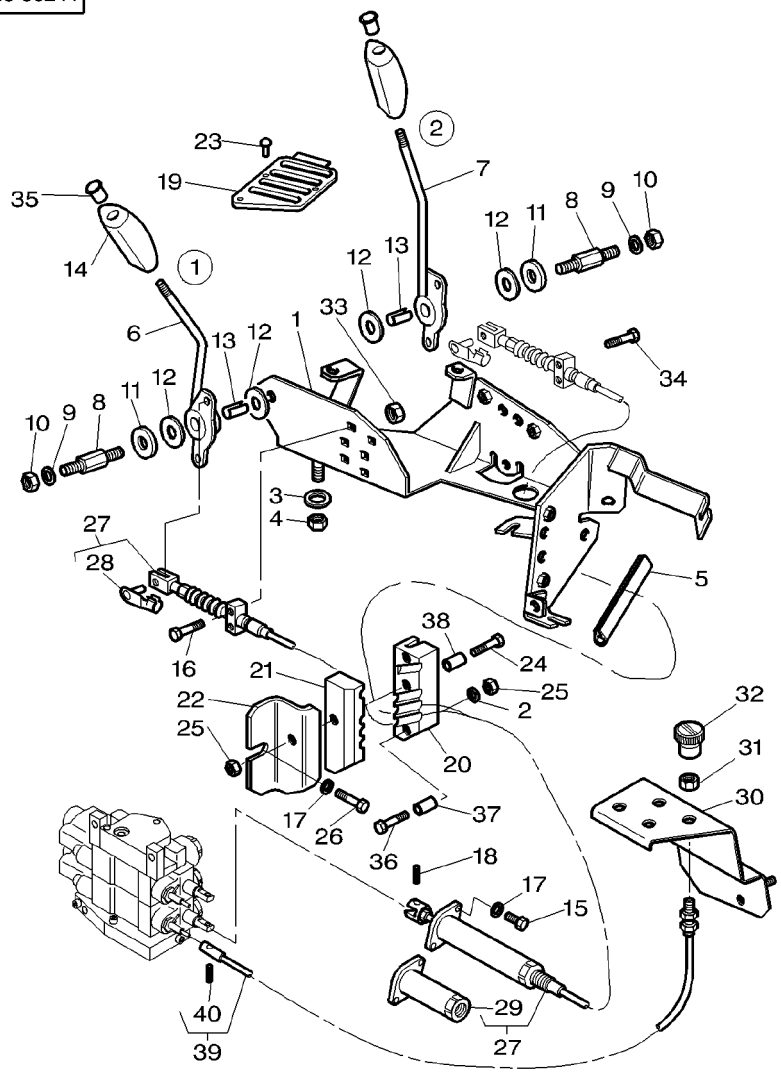

27	3778566M2	◀▶	1310MM
28	3600190M1	27 ◀▶	28MM
29	3902200M91	27	
30	3779479M1		
31	3009693X1		
32	3715367M1		[B]
32	3715365M1		[C]
33	1441500X1		M6
34	3009332X1		M6X30
35	3715496M1		[B]
35	**3715497M1**		[C]
36	1440922X1		M6X60
37	3714645M1		∅ 8X26,5
38	3714646M1		∅ 8X50
39	3779469M1		◀▶ 593MM
40	3010003X1	39	

[B] BLACK
NOIR
SCHWARTZ
NERO
NEGRO

[C] RED
ROUGE
ROT
ROSSO
ROJA

2	HYDRAULIC CABLE	CABLE CDE HYDRAU CAVO HYDRAULICA	HYDRAULIKKABEL CABLE HIDRAULICO
1	CLEVIS PIN	AXE PERNO D'ATTACCO	SPLINTBOLZEN BULON CILINDRICO
1	PARTS PACK	JEU PIECES PACCO RICAMBI	SATZ TEILE PAQUETE PIEZAS
1	SUPPORT	SUPPORT SUPPORTO	LAGERUNG DISPOS.DE SOSTEN
2	NUT METRIC	ECROU METRIQUE DADO METRICO	MUTTER METRISCH TUERCA METRICO
1	BUTTON	BOUTON PULSANTE	KNOPFTASTE PULSADOR
1	BUTTON	BOUTON PULSANTE	KNOPFTASTE PULSADOR
4	LOCKNUT	ECROU BLOCAGE AUTOBLOCCANTE	FLACHMUTTER CONTRATUERCA
2	SCREW	VIS VITE	SCHRAUBE TORNILLO
1	MUFF	CACHE MANICOTTO DEVIAN	FLANSCHMUFFE MANGUITO ACOPLAM
1	MUFF	CACHE MANICOTTO DEVIAN	FLANSCHMUFFE MANGUITO ACOPLAM
1	BOLT	BOULON BULLONE	MASCH.SCHRAUBE PERNO
2	SPACER	ENTRETOISE DISTANZIALE	ABSTANDSTUECK PIEZA DISTANCIA
1	SPACER	ENTRETOISE DISTANZIALE	ABSTANDSTUECK PIEZA DISTANCIA
2	CABLE	CABLE CAVO	KABEL CABLE
1	SCREW	VIS VITE	SCHRAUBE TORNILLO

2 Distributors Control
Commande Avec 2 Distributeurs
Antrieb Mit 2 Verteilers
Comandi Con 2 Distributors
Mando Con 2 Distribuidors

70-420

➡ **H351015**

1-ZP39-003-A

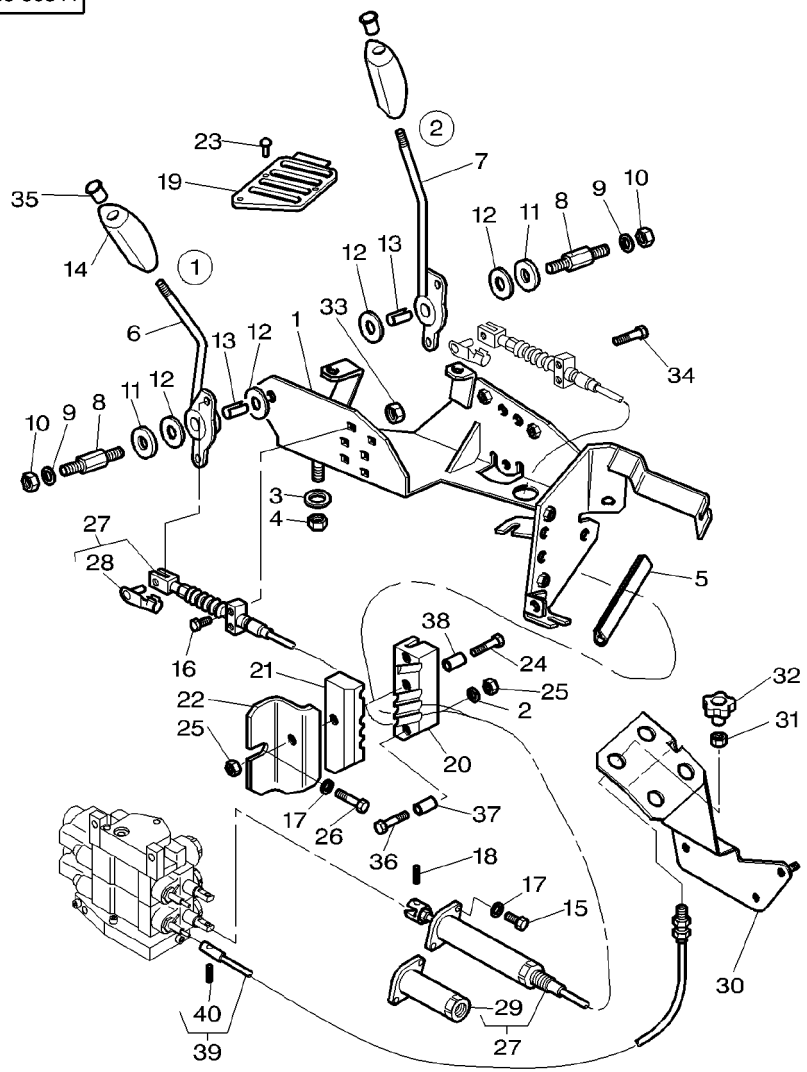

1	3778480M91		**1**	SUPPORT	SUPPORT SUPPORTO	LAGERUNG DISPOS.DE SOSTEN
2	390971X1		**2**	WASHER METRIC	RONDELLE METR. RONDELLA METRICO	SCHEIBE METRISCH ARANDELA METRICO
3	385361X1		**4**	WASHER METRIC	RONDELLE METR. RONDELLA METRICO	SCHEIBE METRISCH ARANDELA METRICO
4	1441461X1	M8	**4**	NUT METRIC	ECROU METRIQUE DADO METRICO	MUTTER METRISCH TUERCA METRICO
5	1684844M1	◀▶ 80MM	**1**	SEAL	JOINT ETANCHEITE PARAOLIO	DICHTRING RETEN
6	3778481M2		**1**	LEVER	LEVIER LEVA	HEBEL PALANCA
7	3778482M2		**1**	LEVER	LEVIER LEVA	HEBEL PALANCA
8	3712956M3		**2**	CLEVIS PIN	AXE PERNO D'ATTACCO	SPLINTBOLZEN BULON CILINDRICO
9	390972X1		**2**	WASHER METRIC	RONDELLE METR. RONDELLA METRICO	SCHEIBE METRISCH ARANDELA METRICO
10	1441461X1	M8	**2**	NUT METRIC	ECROU METRIQUE DADO METRICO	MUTTER METRISCH TUERCA METRICO
11	3387447M1		**2**	WASHER	RONDELLE RONDELLA	UNTERLEGSCHEIBE ARANDELA
12	3386514M1		**4**	FRICTION DISC	DISQUE FRICTION DISCO DI FRIZION	REIBSCHEIBE DISCO FRICCION
13	3713905M1		**2**	BEARING	COUSSINET CUSCINETTO	LAGER COJINETE
14	3715495M1		**2**	HANDLE	POIGNEE MANIGLIA	HANDGRIFF MANETA
15	357831X1	1/4"−20X16	**4**	SCREW	VIS VITE	SCHRAUBE TORNILLO
16	3009332X1	M6X30	**2**	SCREW	VIS VITE	SCHRAUBE TORNILLO
17	390971X1		**7**	WASHER METRIC	RONDELLE METR. RONDELLA METRICO	SCHEIBE METRISCH ARANDELA METRICO
18	3714223M1		**2**	CLEVIS PIN	AXE PERNO D'ATTACCO	SPLINTBOLZEN BULON CILINDRICO
19	3778486M1		**1**	GRILLE	GRILLE GRIGLIA	GRILL REJILLA
20	3712979M2		**1**	BRIDLE	BRIDE BRIGLIA	SPANNBAND BRIDA
21	3712980M2		**1**	BRIDLE	BRIDE BRIGLIA	SPANNBAND BRIDA
22	3712981M2		**1**	ANGLE	EQUERRE ANGOLO	WINKEL ANGULO
23	**3010506X1**	M5X16	**7**	SCREW	VIS VITE	SCHRAUBE TORNILLO
24	339096X1	M6X35	**2**	BOLT METRIC	BOULON METRIQUE BULLONE METRICO	MASCH.SCHRB MET PERNO METRICO
25	339030X1		**3**	NUT METRIC	ECROU METRIQUE DADO METRICO	MUTTER METRISCH TUERCA METRICO
26	339560X1	M6X16	**1**	SCREW METRIC	VIS METRIQUE VITE METRICA	SCHRAUBE METR TORNILLO METRICO

2 Distributors Control
Commande Avec 2 Distributeurs
Antrieb Mit 2 Verteilers
Comandi Con 2 Distributors
Mando Con 2 Distribuidors

70-420

H351015

1-ZP39-003-A

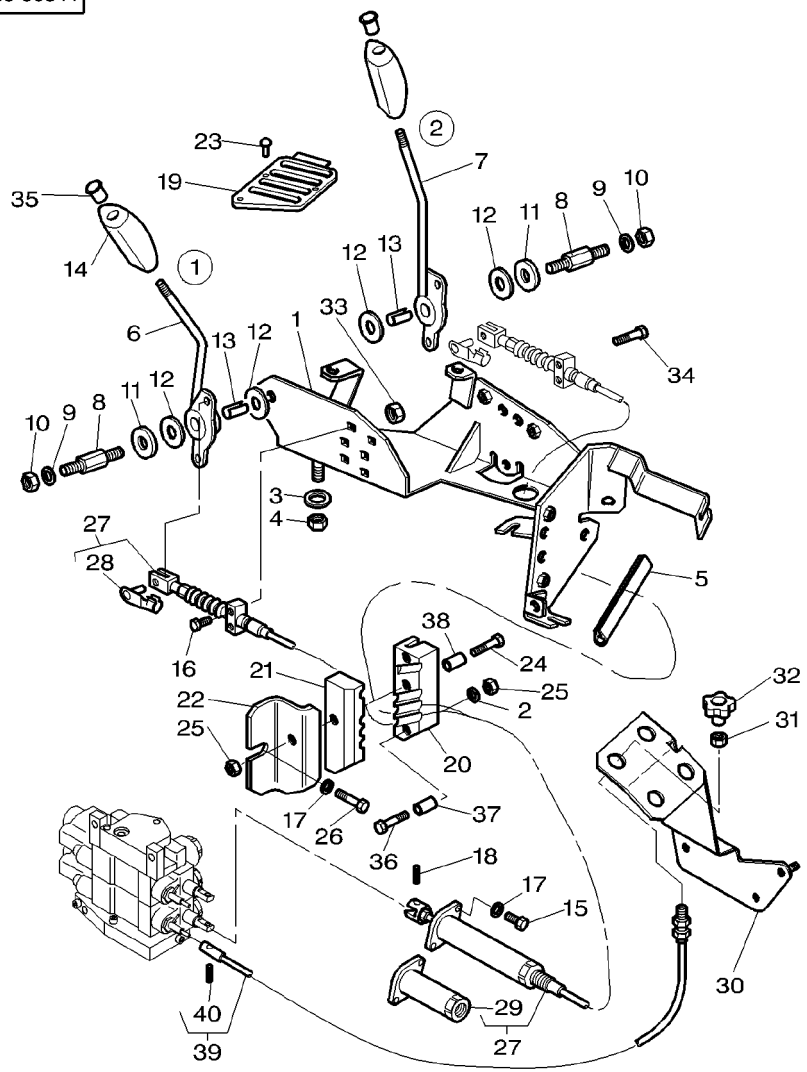

27	3778566M2	◀▶	1310MM
28	3600190M1	27 ◀▶	28MM
29	3902200M91	27	
30	3783151M1		
31	3009693X1		
32	3783400M1	[B]	
32	3783401M1	[C]	
33	1441500X1	M6	
34	3009332X1	M6X30	
35	3715496M1	[B]	
35	**3715497M1**	[C]	
36	1440922X1	M6X60	
37	3714645M1	∅	8X26,5
38	3714646M1	∅	8X50
39	3783230M1	◀▶	605,5MM
40	3010003X1	39	

[B] BLACK
NOIR
SCHWARTZ
NERO
NEGRO

[C] RED
ROUGE
ROT
ROSSO
ROJA

2	HYDRAULIC CABLE	CABLE CDE HYDRAU CAVO HYDRAULICA	HYDRAULIKKABEL CABLE HIDRAULICO
1	CLEVIS PIN	AXE PERNO D'ATTACCO	SPLINTBOLZEN BULON CILINDRICO
1	PARTS PACK	JEU PIECES PACCO RICAMBI	SATZ TEILE PAQUETE PIEZAS
1	PLATE	PLAQUE PIASTRA	PLATTE PLATO
2	NUT METRIC	ECROU METRIQUE DADO METRICO	MUTTER METRISCH TUERCA METRICO
1	BUTTON	BOUTON PULSANTE	KNOPFTASTE PULSADOR
1	BUTTON	BOUTON PULSANTE	KNOPFTASTE PULSADOR
4	LOCKNUT	ECROU BLOCAGE AUTOBLOCCANTE	FLACHMUTTER CONTRATUERCA
2	SCREW	VIS VITE	SCHRAUBE TORNILLO
1	MUFF	CACHE MANICOTTO DEVIAN	FLANSCHMUFFE MANGUITO ACOPLAM
1	MUFF	CACHE MANICOTTO DEVIAN	FLANSCHMUFFE MANGUITO ACOPLAM
1	BOLT	BOULON BULLONE	MASCH.SCHRAUBE PERNO
2	SPACER	ENTRETOISE DISTANZIALE	ABSTANDSTUECK PIEZA DISTANCIA
1	SPACER	ENTRETOISE DISTANZIALE	ABSTANDSTUECK PIEZA DISTANCIA
2	CABLE	CABLE CAVO	KABEL CABLE
1	SCREW	VIS VITE	SCHRAUBE TORNILLO

3 Distributors Control
Commande Avec 3 Distributeurs
Antrieb Mit 3 Verteilers
Comandi Con 3 Distributors
Mando Con 3 Distribuidors

70-425

➡| **H351014**

1-ZP35-002-B

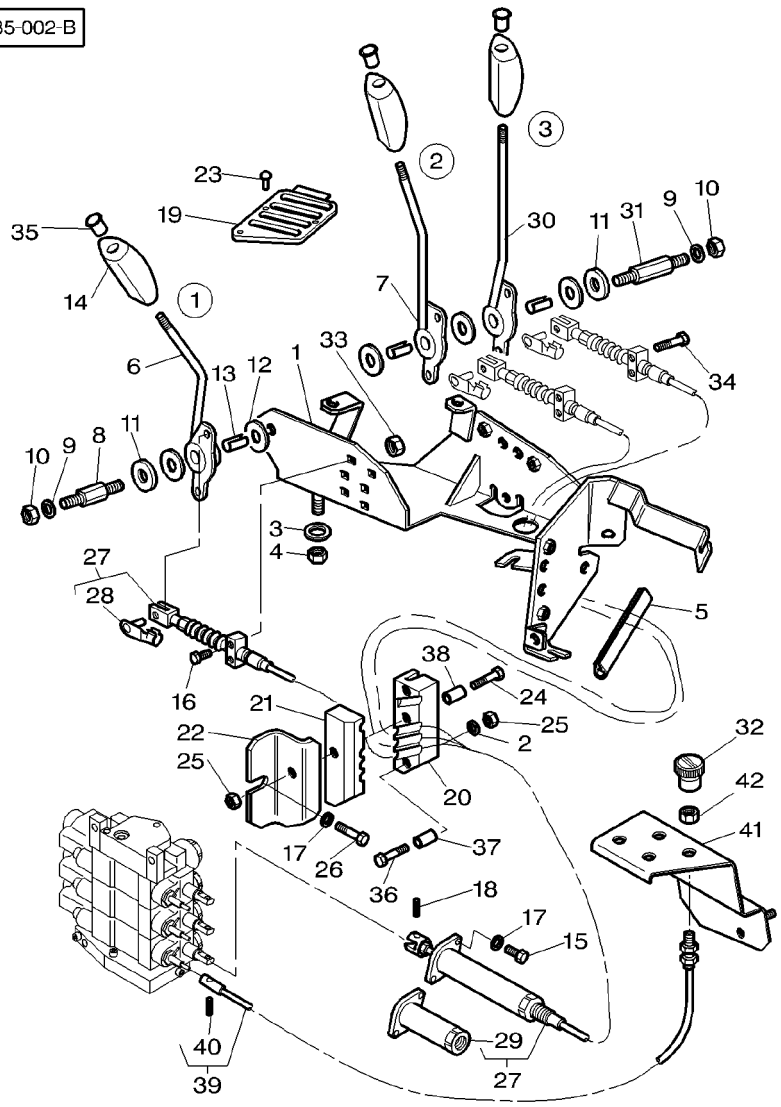

1	3778480M91		**1**	SUPPORT	SUPPORT SUPPORTO	LAGERUNG DISPOS.DE SOSTEN
2	390971X1		**2**	WASHER METRIC	RONDELLE METR. RONDELLA METRICO	SCHEIBE METRISCH ARANDELA METRICO
3	385361X1		**4**	WASHER METRIC	RONDELLE METR. RONDELLA METRICO	SCHEIBE METRISCH ARANDELA METRICO
4	1441461X1	M8	**4**	NUT METRIC	ECROU METRIQUE DADO METRICO	MUTTER METRISCH TUERCA METRICO
5	1684844M1	◀▶ 80MM	**1**	SEAL	JOINT ETANCHEITE PARAOLIO	DICHTRING RETEN
6	3778481M2		**1**	LEVER	LEVIER LEVA	HEBEL PALANCA
7	3778482M2		**1**	LEVER	LEVIER LEVA	HEBEL PALANCA
8	3712956M3		**1**	CLEVIS PIN	AXE PERNO D'ATTACCO	SPLINTBOLZEN BULON CILINDRICO
9	390972X1		**2**	WASHER METRIC	RONDELLE METR. RONDELLA METRICO	SCHEIBE METRISCH ARANDELA METRICO
10	1441461X1	M8	**2**	NUT METRIC	ECROU METRIQUE DADO METRICO	MUTTER METRISCH TUERCA METRICO
11	3387447M1		**2**	WASHER	RONDELLE RONDELLA	UNTERLEGSCHEIBE ARANDELA
12	3386514M1		**5**	FRICTION DISC	DISQUE FRICTION DISCO DI FRIZION	REIBSCHEIBE DISCO FRICCION
13	3713905M1		**3**	BEARING	COUSSINET CUSCINETTO	LAGER COJINETE
14	3715495M1		**3**	HANDLE	POIGNEE MANIGLIA	HANDGRIFF MANETA
15	357831X1	1/4"−20X16	**6**	SCREW	VIS VITE	SCHRAUBE TORNILLO
16	3009332X1	M6X30	**2**	SCREW	VIS VITE	SCHRAUBE TORNILLO
17	390971X1		**7**	WASHER METRIC	RONDELLE METR. RONDELLA METRICO	SCHEIBE METRISCH ARANDELA METRICO
18	3714223M1		**3**	CLEVIS PIN	AXE PERNO D'ATTACCO	SPLINTBOLZEN BULON CILINDRICO
19	3778487M1		**1**	GRILLE	GRILLE GRIGLIA	GRILL REJILLA
20	3712979M2		**1**	BRIDLE	BRIDE BRIGLIA	SPANNBAND BRIDA
21	3712980M2		**1**	BRIDLE	BRIDE BRIGLIA	SPANNBAND BRIDA
22	3712981M2		**1**	ANGLE	EQUERRE ANGOLO	WINKEL ANGULO
23	**3010506X1**	M5X16	**7**	SCREW	VIS VITE	SCHRAUBE TORNILLO
24	339096X1	M6X35	**2**	BOLT METRIC	BOULON METRIQUE BULLONE METRICO	MASCH.SCHRB MET PERNO METRICO
25	339030X1		**3**	NUT METRIC	ECROU METRIQUE DADO METRICO	MUTTER METRISCH TUERCA METRICO
26	339560X1	M6X16	**1**	SCREW METRIC	VIS METRIQUE VITE METRICA	SCHRAUBE METR TORNILLO METRICO

3 Distributors Control
Commande Avec 3 Distributeurs
Antrieb Mit 3 Verteilers
Comandi Con 3 Distributors
Mando Con 3 Distribuidors

70-425

H351014

1-ZP35-002-B

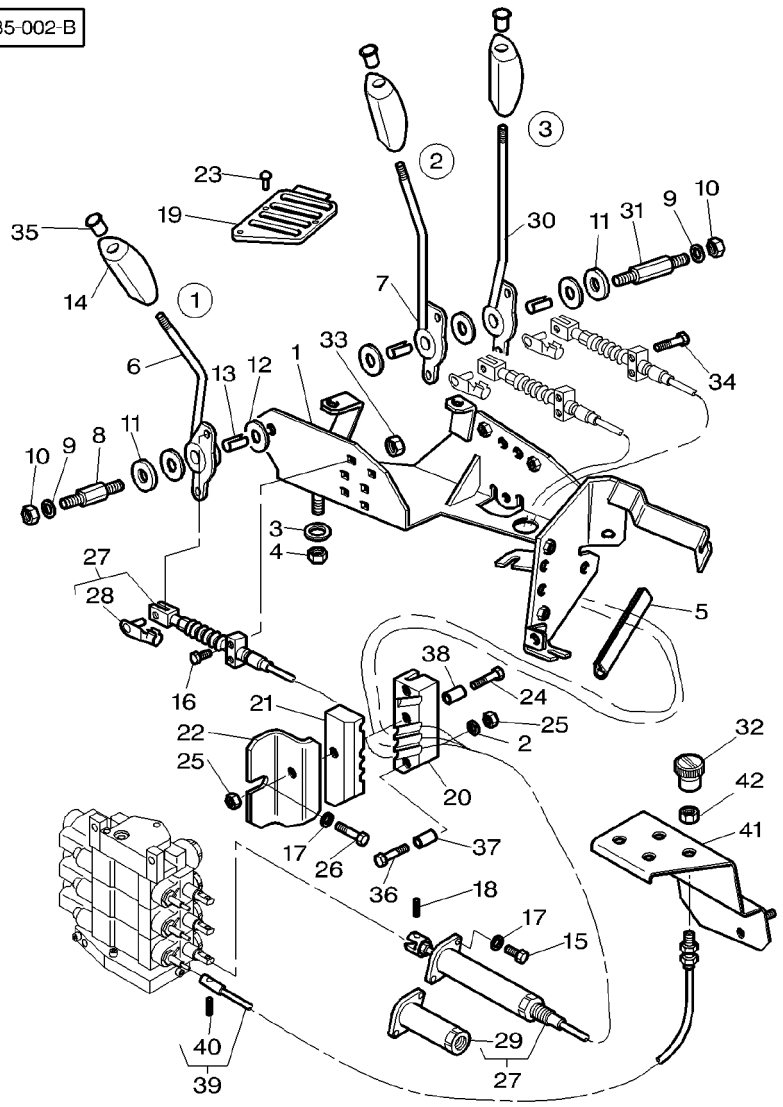

27	3778566M2	◄►	1310MM
28	3600190M1	27 ◄►	28MM
29	3902200M91	27	
30	3778483M2		
31	3712279M3	◄►	78MM
32	3715367M1	[B]	
32	3715365M1	[C]	
32	3715364M1	[D]	
33	1441500X1	M6	
34	3009336X1	M6X55	
35	3715496M1	[B]	
35	**3715497M1**	[C]	
35	**3715498M1**	[D]	
36	1440922X1	M6X60	
37	3714645M1	∅	8X26,5
38	3714646M1	∅	8X50
39	3778560M2	◄►	563MM
39	3779469M1	◄►	593MM
40	3010003X1	39	
41	3779479M1		
42	3009693X1		

[B] BLACK
NOIR
SCHWARTZ
NERO
NEGRO

3	HYDRAULIC CABLE	CABLE CDE HYDRAU CAVO HYDRAULICA	HYDRAULIKKABEL CABLE HIDRAULICO
1	CLEVIS PIN	AXE PERNO D'ATTACCO	SPLINTBOLZEN BULON CILINDRICO
1	PARTS PACK	JEU PIECES PACCO RICAMBI	SATZ TEILE PAQUETE PIEZAS
1	LEVER	LEVIER LEVA	HEBEL PALANCA
1	CLEVIS PIN	AXE PERNO D'ATTACCO	SPLINTBOLZEN BULON CILINDRICO
1	BUTTON	BOUTON PULSANTE	KNOPFTASTE PULSADOR
1	BUTTON	BOUTON PULSANTE	KNOPFTASTE PULSADOR
1	BUTTON	BOUTON PULSANTE	KNOPFTASTE PULSADOR
4	LOCKNUT	ECROU BLOCAGE AUTOBLOCCANTE	FLACHMUTTER CONTRATUERCA
2	SCREW	VIS VITE	SCHRAUBE TORNILLO
1	MUFF	CACHE MANICOTTO DEVIAN	FLANSCHMUFFE MANGUITO ACOPLAM
1	MUFF	CACHE MANICOTTO DEVIAN	FLANSCHMUFFE MANGUITO ACOPLAM
1	MUFF	CACHE MANICOTTO DEVIAN	FLANSCHMUFFE MANGUITO ACOPLAM
1	BOLT	BOULON BULLONE	MASCH.SCHRAUBE PERNO
2	SPACER	ENTRETOISE DISTANZIALE	ABSTANDSTUECK PIEZA DISTANCIA
1	SPACER	ENTRETOISE DISTANZIALE	ABSTANDSTUECK PIEZA DISTANCIA
1	CABLE	CABLE CAVO	KABEL CABLE
2	CABLE	CABLE CAVO	KABEL CABLE
1	SCREW	VIS VITE	SCHRAUBE TORNILLO
1	SUPPORT	SUPPORT SUPPORTO	LAGERUNG DISPOS.DE SOSTEN
3	NUT METRIC	ECROU METRIQUE DADO METRICO	MUTTER METRISCH TUERCA METRICO

3 Distributors Control
Commande Avec 3 Distributeurs
Antrieb Mit 3 Verteilers
Comandi Con 3 Distributors
Mando Con 3 Distribuidors

70-425

H351014

1-ZP35-002-B

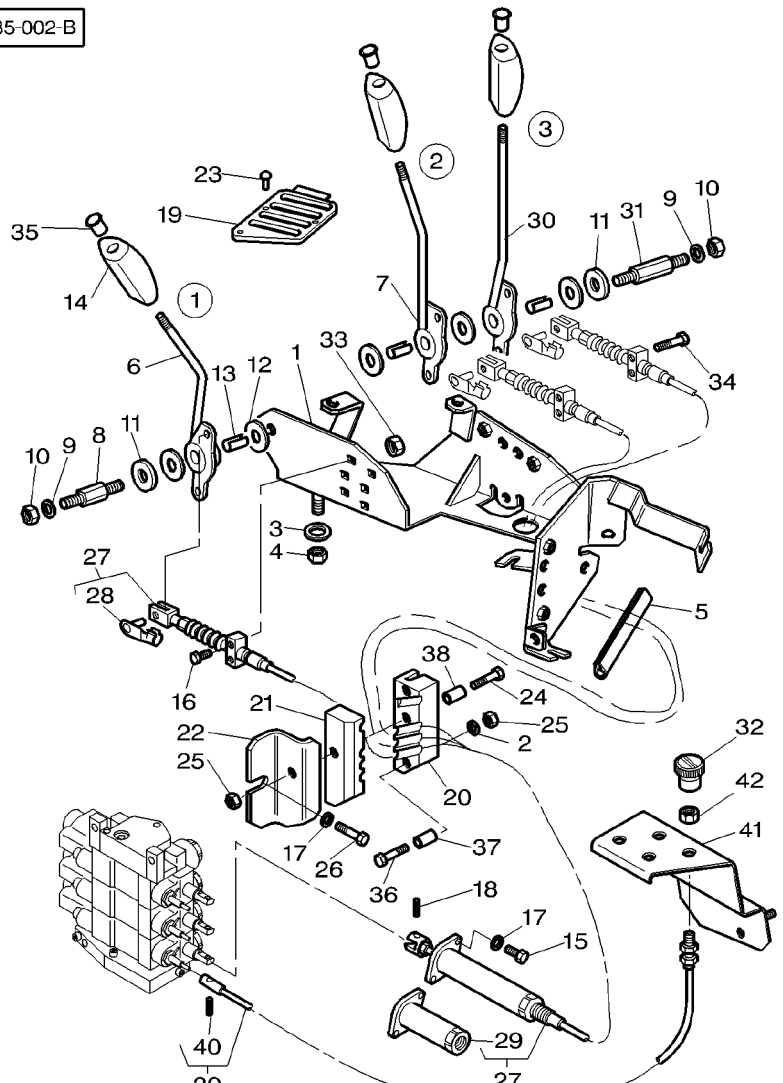

[C] RED
ROUGE
ROT
ROSSO
ROJA

[D] GREEN
VERT
GRUEN
VERDE
VERDE

3 Distributors Control	With Dual Control
Commande Avec 3 Distributeurs	Avec Dual Control
Antrieb Mit 3 Verteilers	Mit Dual Control
Comandi Con 3 Distributors	Con Dual Control
Mando Con 3 Distribuidors	Con Dual Control

70-430

➡ **H351015**

1-ZP43-002-B

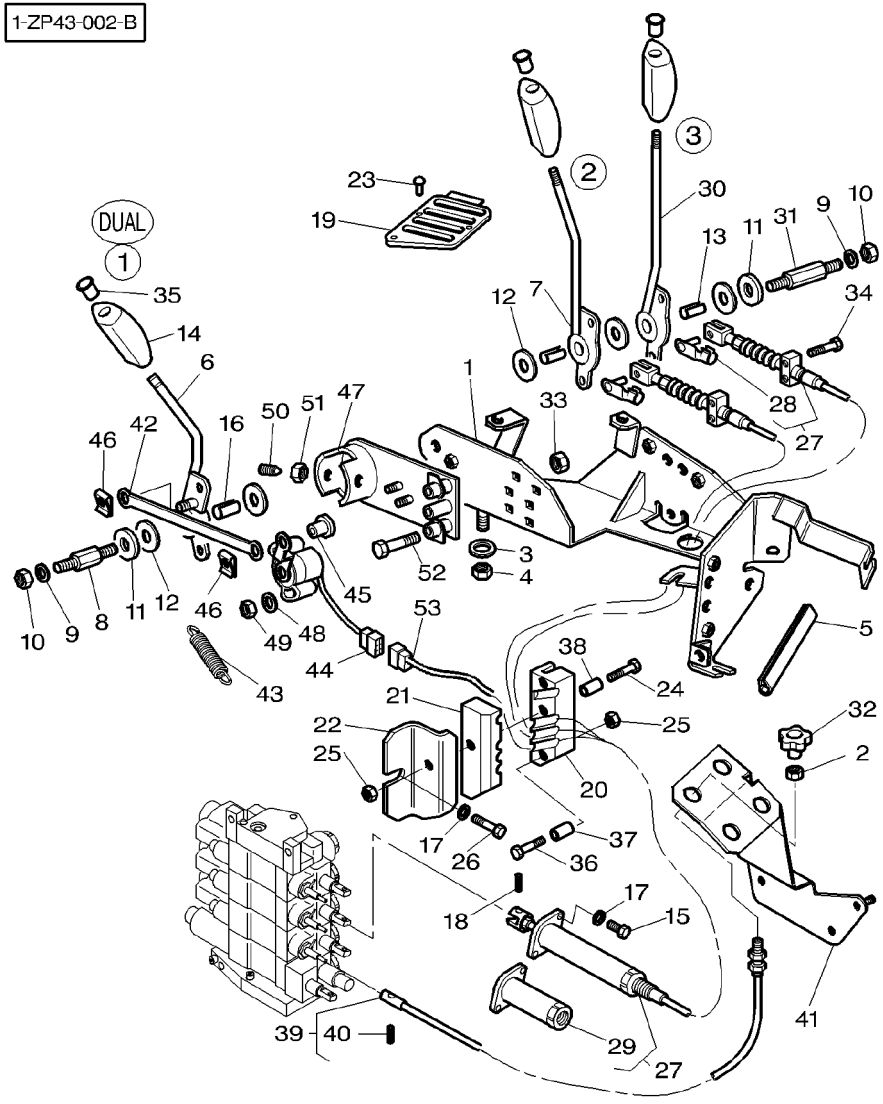

1	3778480M91		**1**	SUPPORT	SUPPORT SUPPORTO	LAGERUNG DISPOS.DE SOSTEN
2	3009693X1		**3**	NUT METRIC	ECROU METRIQUE DADO METRICO	MUTTER METRISCH TUERCA METRICO
3	385361X1		**4**	WASHER METRIC	RONDELLE METR. RONDELLA METRICO	SCHEIBE METRISCH ARANDELA METRICO
4	1441461X1	M8	**4**	NUT METRIC	ECROU METRIQUE DADO METRICO	MUTTER METRISCH TUERCA METRICO
5	1684844M1	◀▶ 80MM	**1**	SEAL	JOINT ETANCHEITE PARAOLIO	DICHTRING RETEN
6	3783143M1		**1**	LEVER	LEVIER LEVA	HEBEL PALANCA
7	3778482M2		**1**	LEVER	LEVIER LEVA	HEBEL PALANCA
8	3712956M3		**1**	CLEVIS PIN	AXE PERNO D'ATTACCO	SPLINTBOLZEN BULON CILINDRICO
9	390972X1		**2**	WASHER METRIC	RONDELLE METR. RONDELLA METRICO	SCHEIBE METRISCH ARANDELA METRICO
10	1441461X1	M8	**2**	NUT METRIC	ECROU METRIQUE DADO METRICO	MUTTER METRISCH TUERCA METRICO
11	3387447M1		**2**	WASHER	RONDELLE RONDELLA	UNTERLEGSCHEIBE ARANDELA
12	3386514M1		**5**	FRICTION DISC	DISQUE FRICTION DISCO DI FRIZION	REIBSCHEIBE DISCO FRICCION
13	3713905M1		**2**	BEARING	COUSSINET CUSCINETTO	LAGER COJINETE
14	3715495M1		**3**	HANDLE	POIGNEE MANIGLIA	HANDGRIFF MANETA
15	357831X1	1/4"-20X16	**6**	SCREW	VIS VITE	SCHRAUBE TORNILLO
16	3386515M1		**1**	BEARING	COUSSINET CUSCINETTO	LAGER COJINETE
17	390971X1		**7**	WASHER METRIC	RONDELLE METR. RONDELLA METRICO	SCHEIBE METRISCH ARANDELA METRICO
18	3714223M1		**2**	CLEVIS PIN	AXE PERNO D'ATTACCO	SPLINTBOLZEN BULON CILINDRICO
19	3778487M1		**1**	GRILLE	GRILLE GRIGLIA	GRILL REJILLA
20	3712979M2		**1**	BRIDLE	BRIDE BRIGLIA	SPANNBAND BRIDA
21	3712980M2		**1**	BRIDLE	BRIDE BRIGLIA	SPANNBAND BRIDA
22	3712981M2		**1**	ANGLE	EQUERRE ANGOLO	WINKEL ANGULO
23	**3010506X1**	M5X16	**7**	SCREW	VIS VITE	SCHRAUBE TORNILLO
24	339096X1	M6X35	**2**	BOLT METRIC	BOULON METRIQUE BULLONE METRICO	MASCH.SCHRB MET PERNO METRICO
25	1441500X1		**3**	LOCKNUT	ECROU BLOCAGE AUTOBLOCCANTE	FLACHMUTTER CONTRATUERCA
26	339560X1	M6X16	**1**	SCREW METRIC	VIS METRIQUE VITE METRICA	SCHRAUBE METR TORNILLO METRICO

3 Distributors Control	With Dual Control
Commande Avec 3 Distributeurs	Avec Dual Control
Antrieb Mit 3 Verteilers	Mit Dual Control
Comandi Con 3 Distributors	Con Dual Control
Mando Con 3 Distribuidors	Con Dual Control

70-430

H351015

1-ZP43-002-B

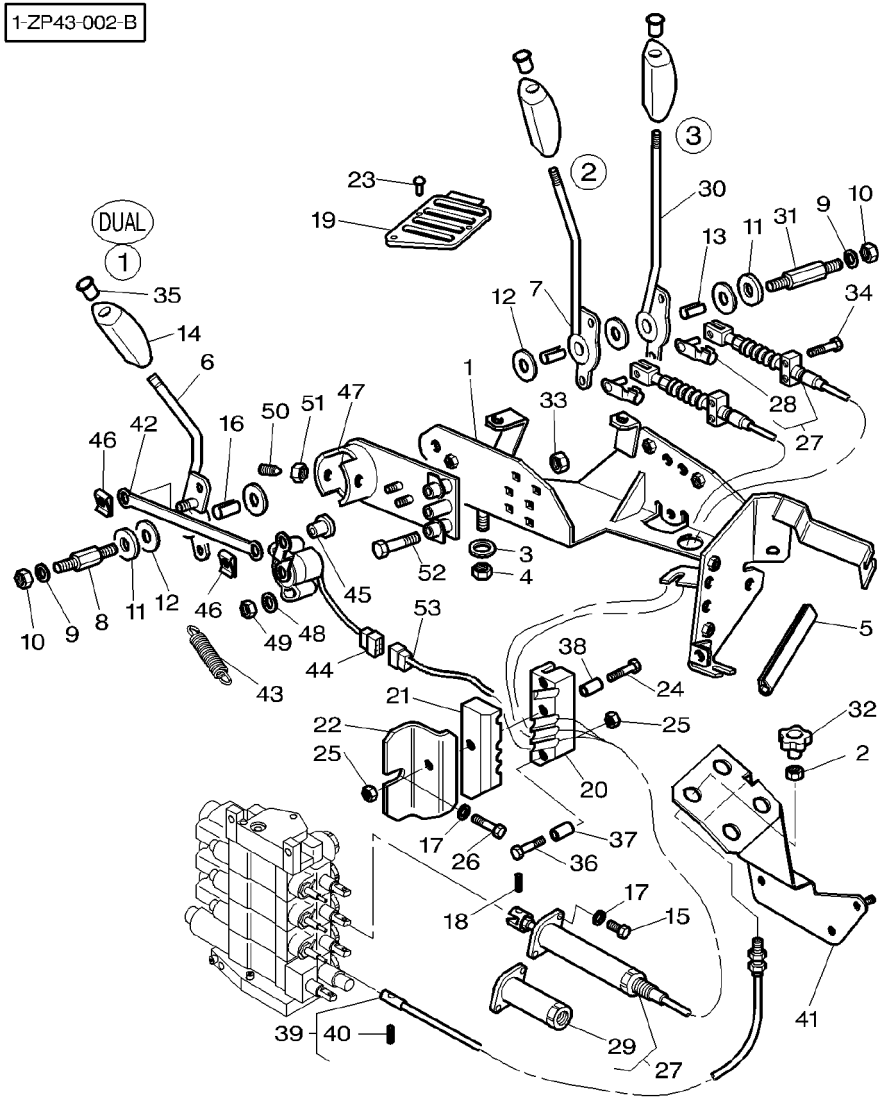

27	3778566M2	◀▶	1310MM
28	3600190M1	27 ◀▶	28MM
29	3902200M91	27	
30	3778483M2		
31	3712279M3	◀▶	78MM
32	3783400M1		[B]
32	3783401M1		[C]
32	3783402M1		[D]
33	1441500X1		M6
34	3009336X1		M6X55
35	3715496M1		[B]
35	**3715497M1**		[C]
35	**3715498M1**		[D]
36	1440922X1		M6X60
37	3714645M1	∅	8X26,5
38	3714646M1	∅	8X50
39	3783229M1	◀▶	515,5MM
39	3783230M1	◀▶	605,5MM
40	3010003X1	39	
41	3783151M1		
42	3715466M1		
43	3616740M2		
44	3715459M1		
45	3783144M1		
46	3783145M1		
47	3783142M1		

2	HYDRAULIC CABLE	CABLE CDE HYDRAU CAVO HYDRAULICA	HYDRAULIKKABEL CABLE HIDRAULICO
1	CLEVIS PIN	AXE PERNO D'ATTACCO	SPLINTBOLZEN BULON CILINDRICO
1	PARTS PACK	JEU PIECES PACCO RICAMBI	SATZ TEILE PAQUETE PIEZAS
1	LEVER	LEVIER LEVA	HEBEL PALANCA
1	CLEVIS PIN	AXE PERNO D'ATTACCO	SPLINTBOLZEN BULON CILINDRICO
1	BUTTON	BOUTON PULSANTE	KNOPFTASTE PULSADOR
1	BUTTON	BOUTON PULSANTE	KNOPFTASTE PULSADOR
1	BUTTON	BOUTON PULSANTE	KNOPFTASTE PULSADOR
4	LOCKNUT	ECROU BLOCAGE AUTOBLOCCANTE	FLACHMUTTER CONTRATUERCA
2	SCREW	VIS VITE	SCHRAUBE TORNILLO
1	MUFF	CACHE MANICOTTO DEVIAN	FLANSCHMUFFE MANGUITO ACOPLAM
1	MUFF	CACHE MANICOTTO DEVIAN	FLANSCHMUFFE MANGUITO ACOPLAM
1	MUFF	CACHE MANICOTTO DEVIAN	FLANSCHMUFFE MANGUITO ACOPLAM
1	BOLT	BOULON BULLONE	MASCH.SCHRAUBE PERNO
2	SPACER	ENTRETOISE DISTANZIALE	ABSTANDSTUECK PIEZA DISTANCIA
1	SPACER	ENTRETOISE DISTANZIALE	ABSTANDSTUECK PIEZA DISTANCIA
1	CABLE	CABLE CAVO	KABEL CABLE
2	CABLE	CABLE CAVO	KABEL CABLE
1	SCREW	VIS VITE	SCHRAUBE TORNILLO
1	PLATE	PLAQUE PIASTRA	PLATTE PLATO
1	ROD LINK	BIELLETTE BISCOTTINO	VERBINDG.STANGE VARILLA ENGANCHE
2	SPRING	RESSORT MOLLA	FEDER MUELLE
1	INDUCTIVE TAKER	CAPTEUR INDUCTIF SENSORE INDUTTIV	SENSOR GESCHWIN. CAPTADOR INDUCT.
1	CLEVIS PIN	AXE PERNO D'ATTACCO	SPLINTBOLZEN BULON CILINDRICO
2	THRUSTER	ARRETOIR SPINGITORE	DRUCKRING PROPULSOR
1	SUPPORT	SUPPORT SUPPORTO	LAGERUNG DISPOS.DE SOSTEN

3 Distributors Control	With Dual Control
Commande Avec 3 Distributeurs	Avec Dual Control
Antrieb Mit 3 Verteilers	Mit Dual Control
Comandi Con 3 Distributors	Con Dual Control
Mando Con 3 Distribuidors	Con Dual Control

70-430

H351015

1-ZP43-002-B

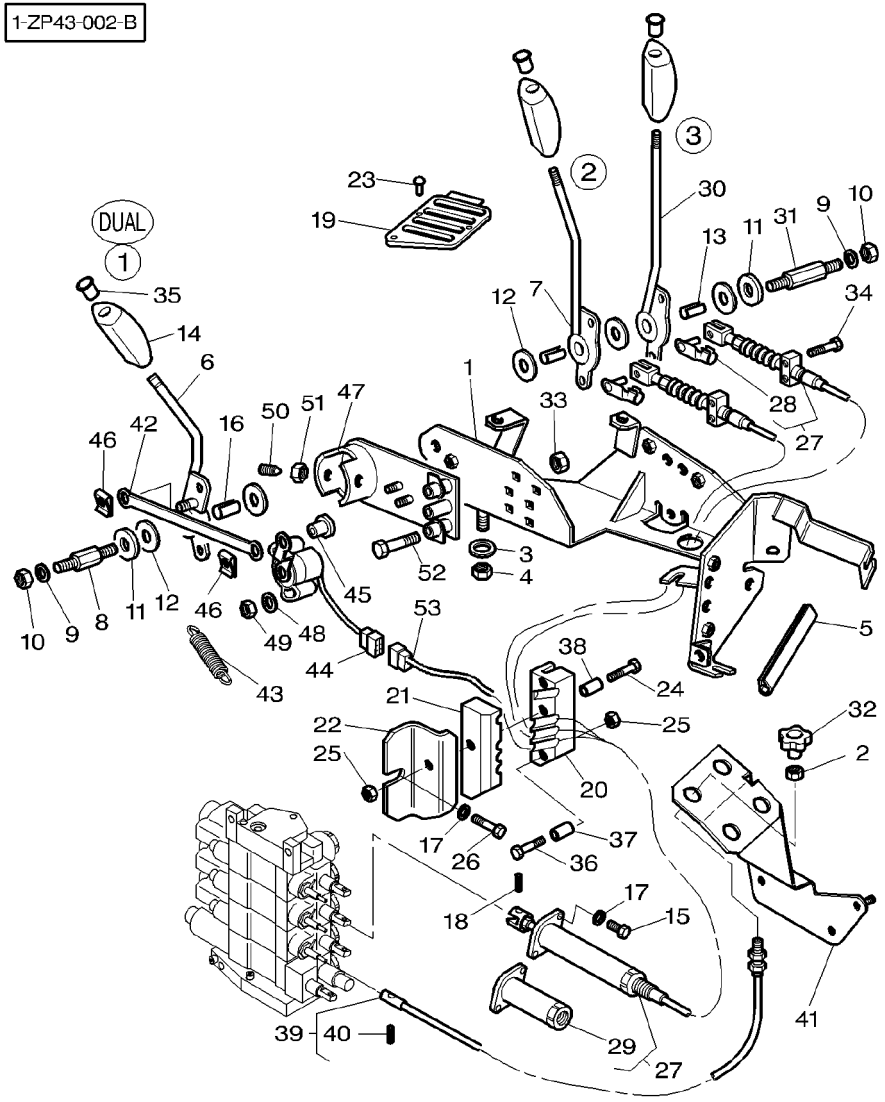

48	390469X1		**2**	WASHER METRIC	RONDELLE METR. RONDELLA METRICO	SCHEIBE METRISCH ARANDELA METRICO
49	3010477X1		**2**	NUT METRIC	ECROU METRIQUE DADO METRICO	MUTTER METRISCH TUERCA METRICO
50	3618127M2		**2**	POPPET	POUSSOIR SUPPORTO VERTIC.	VENTILKEGEL CONTRAPUNTA
51	3009696X1		**2**	NUT	ECROU DADO	MUTTER TUERCA
52	3010974X1	M6X40	**2**	SCREW	VIS VITE	SCHRAUBE TORNILLO
53		90-20 No 2	**1**	HARNESS	FAISCEAU FASCIOCAVI	KABELBAUM MAZO CABLES

[B] BLACK
NOIR
SCHWARTZ
NERO
NEGRO

[C] RED
ROUGE
ROT
ROSSO
ROJA

[D] GREEN
VERT
GRUEN
VERDE
VERDE

3 Distributors Control
Commande Avec 3 Distributeurs
Antrieb Mit 3 Verteilers
Comandi Con 3 Distributors
Mando Con 3 Distribuidors

70-435

➡ **H351015**

1-ZP35-003-A

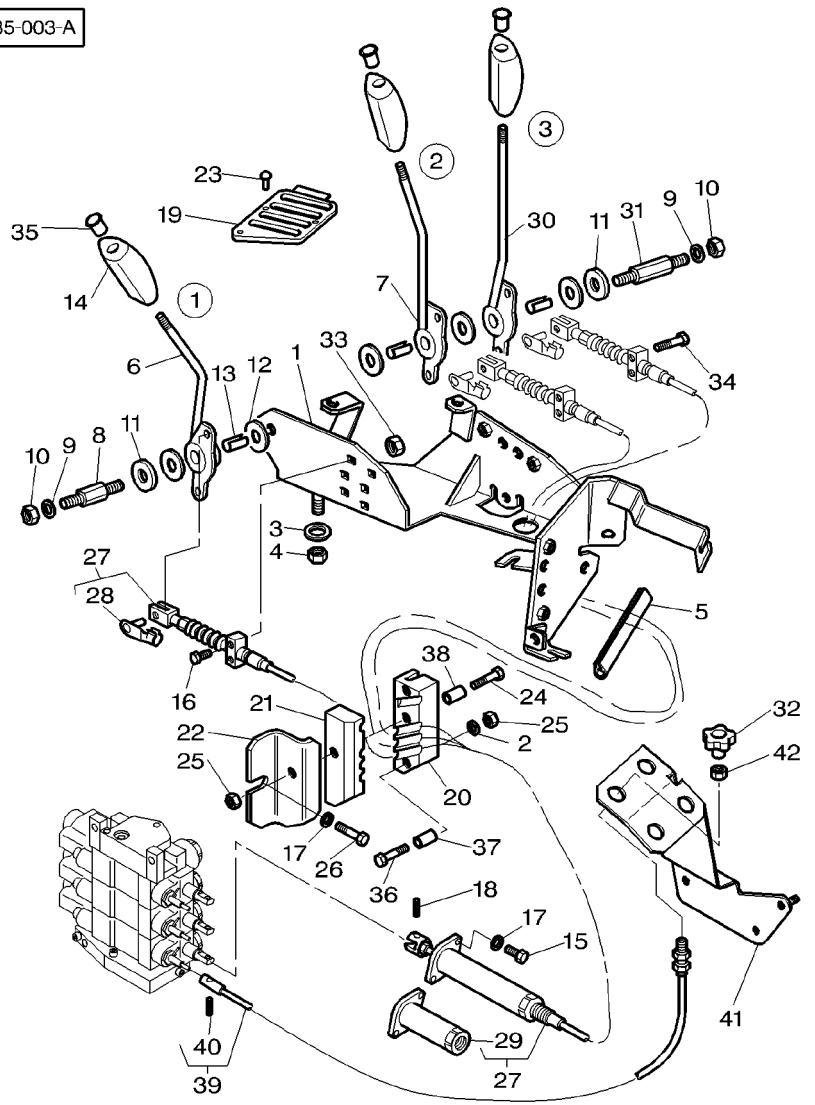

1	3778480M91		**1**	SUPPORT	SUPPORT SUPPORTO	LAGERUNG DISPOS.DE SOSTEN
2	390971X1		**2**	WASHER METRIC	RONDELLE METR. RONDELLA METRICO	SCHEIBE METRISCH ARANDELA METRICO
3	385361X1		**4**	WASHER METRIC	RONDELLE METR. RONDELLA METRICO	SCHEIBE METRISCH ARANDELA METRICO
4	1441461X1	M8	**4**	NUT METRIC	ECROU METRIQUE DADO METRICO	MUTTER METRISCH TUERCA METRICO
5	1684844M1	◀▶ 80MM	**1**	SEAL	JOINT ETANCHEITE PARAOLIO	DICHTRING RETEN
6	3778481M2		**1**	LEVER	LEVIER LEVA	HEBEL PALANCA
7	3778482M2		**1**	LEVER	LEVIER LEVA	HEBEL PALANCA
8	3712956M3		**1**	CLEVIS PIN	AXE PERNO D'ATTACCO	SPLINTBOLZEN BULON CILINDRICO
9	390972X1		**2**	WASHER METRIC	RONDELLE METR. RONDELLA METRICO	SCHEIBE METRISCH ARANDELA METRICO
10	1441461X1	M8	**2**	NUT METRIC	ECROU METRIQUE DADO METRICO	MUTTER METRISCH TUERCA METRICO
11	3387447M1		**2**	WASHER	RONDELLE RONDELLA	UNTERLEGSCHEIBE ARANDELA
12	3386514M1		**5**	FRICTION DISC	DISQUE FRICTION DISCO DI FRIZION	REIBSCHEIBE DISCO FRICCION
13	3713905M1		**3**	BEARING	COUSSINET CUSCINETTO	LAGER COJINETE
14	3715495M1		**3**	HANDLE	POIGNEE MANIGLIA	HANDGRIFF MANETA
15	357831X1	1/4"−20X16	**6**	SCREW	VIS VITE	SCHRAUBE TORNILLO
16	3009332X1	M6X30	**2**	SCREW	VIS VITE	SCHRAUBE TORNILLO
17	390971X1		**7**	WASHER METRIC	RONDELLE METR. RONDELLA METRICO	SCHEIBE METRISCH ARANDELA METRICO
18	3714223M1		**3**	CLEVIS PIN	AXE PERNO D'ATTACCO	SPLINTBOLZEN BULON CILINDRICO
19	3778487M1		**1**	GRILLE	GRILLE GRIGLIA	GRILL REJILLA
20	3712979M2		**1**	BRIDLE	BRIDE BRIGLIA	SPANNBAND BRIDA
21	3712980M2		**1**	BRIDLE	BRIDE BRIGLIA	SPANNBAND BRIDA
22	3712981M2		**1**	ANGLE	EQUERRE ANGOLO	WINKEL ANGULO
23	**3010506X1**	M5X16	**7**	SCREW	VIS VITE	SCHRAUBE TORNILLO
24	339096X1	M6X35	**2**	BOLT METRIC	BOULON METRIQUE BULLONE METRICO	MASCH.SCHRB MET PERNO METRICO
25	339030X1		**3**	NUT METRIC	ECROU METRIQUE DADO METRICO	MUTTER METRISCH TUERCA METRICO
26	339560X1	M6X16	**1**	SCREW METRIC	VIS METRIQUE VITE METRICA	SCHRAUBE METR TORNILLO METRICO

3 Distributors Control
Commande Avec 3 Distributeurs
Antrieb Mit 3 Verteilers
Comandi Con 3 Distributors
Mando Con 3 Distribuidors

70-435

H351015

1-ZP35-003-A

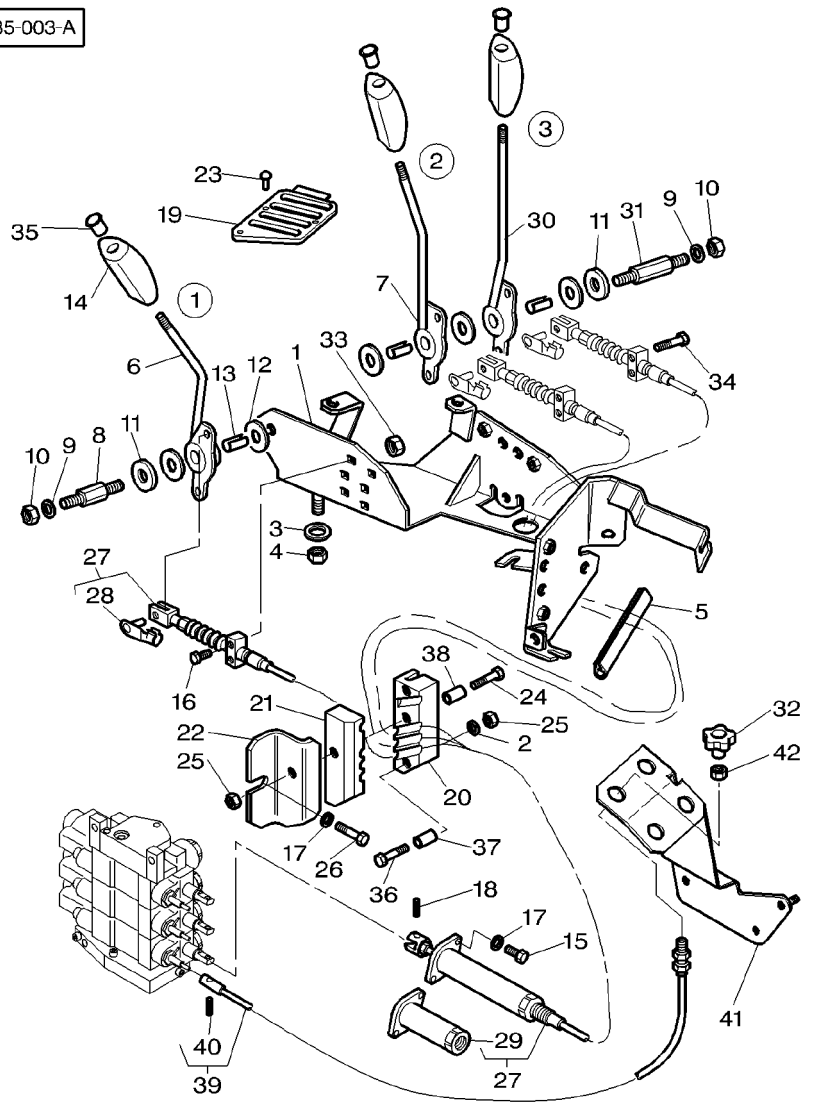

27	3778566M2	◀▶	1310MM
28	3600190M1	27 ◀▶	28MM
29	3902200M91	27	
30	3778483M2		
31	3712279M3	◀▶	78MM
32	3783400M1	[B]	
32	3783401M1	[C]	
32	3783402M1	[D]	
33	1441500X1	M6	
34	3009336X1	M6X55	
35	3715496M1	[B]	
35	**3715497M1**	[C]	
35	**3715498M1**	[D]	
36	1440922X1	M6X60	
37	3714645M1	∅	8X26,5
38	3714646M1	∅	8X50
39	3783229M1	◀▶	515,5MM
39	3783230M1	◀▶	605,5MM
40	3010003X1	39	
41	3783151M1		
42	3009693X1		

[B] BLACK
NOIR
SCHWARTZ
NERO
NEGRO

3	HYDRAULIC CABLE	CABLE CDE HYDRAU CAVO HYDRAULICA	HYDRAULIKKABEL CABLE HIDRAULICO
1	CLEVIS PIN	AXE PERNO D'ATTACCO	SPLINTBOLZEN BULON CILINDRICO
1	PARTS PACK	JEU PIECES PACCO RICAMBI	SATZ TEILE PAQUETE PIEZAS
1	LEVER	LEVIER LEVA	HEBEL PALANCA
1	CLEVIS PIN	AXE PERNO D'ATTACCO	SPLINTBOLZEN BULON CILINDRICO
1	BUTTON	BOUTON PULSANTE	KNOPFTASTE PULSADOR
1	BUTTON	BOUTON PULSANTE	KNOPFTASTE PULSADOR
1	BUTTON	BOUTON PULSANTE	KNOPFTASTE PULSADOR
4	LOCKNUT	ECROU BLOCAGE AUTOBLOCCANTE	FLACHMUTTER CONTRATUERCA
2	SCREW	VIS VITE	SCHRAUBE TORNILLO
1	MUFF	CACHE MANICOTTO DEVIAN	FLANSCHMUFFE MANGUITO ACOPLAM
1	MUFF	CACHE MANICOTTO DEVIAN	FLANSCHMUFFE MANGUITO ACOPLAM
1	MUFF	CACHE MANICOTTO DEVIAN	FLANSCHMUFFE MANGUITO ACOPLAM
1	BOLT	BOULON BULLONE	MASCH.SCHRAUBE PERNO
2	SPACER	ENTRETOISE DISTANZIALE	ABSTANDSTUECK PIEZA DISTANCIA
1	SPACER	ENTRETOISE DISTANZIALE	ABSTANDSTUECK PIEZA DISTANCIA
1	CABLE	CABLE CAVO	KABEL CABLE
2	CABLE	CABLE CAVO	KABEL CABLE
1	SCREW	VIS VITE	SCHRAUBE TORNILLO
1	PLATE	PLAQUE PIASTRA	PLATTE PLATO
3	NUT METRIC	ECROU METRIQUE DADO METRICO	MUTTER METRISCH TUERCA METRICO

1-ZP35-003-A

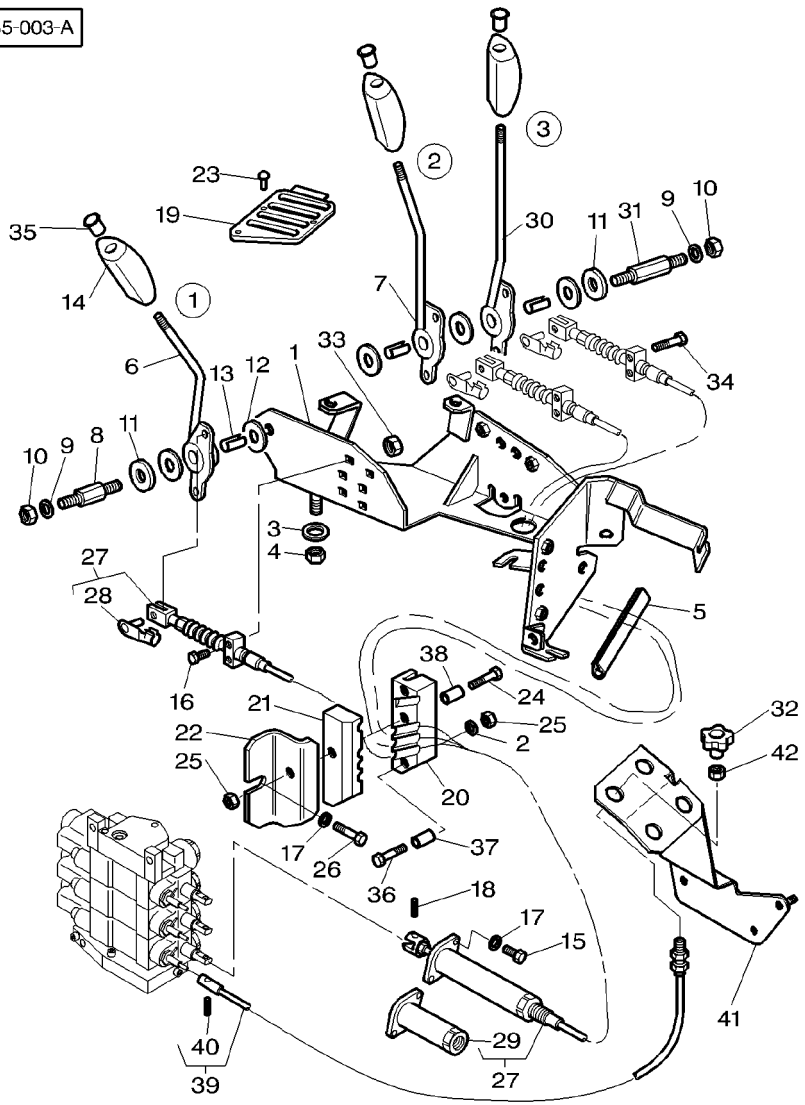

[C] RED
ROUGE
ROT
ROSSO
ROJA

[D] GREEN
VERT
GRUEN
VERDE
VERDE

3 Distributors Control	With Dual Control
Commande Avec 3 Distributeurs	Avec Dual Control
Antrieb Mit 3 Verteilers	Mit Dual Control
Comandi Con 3 Distributors	Con Dual Control
Mando Con 3 Distribuidors	Con Dual Control

70-440

➡ **H351014**

1-ZP43-001-C

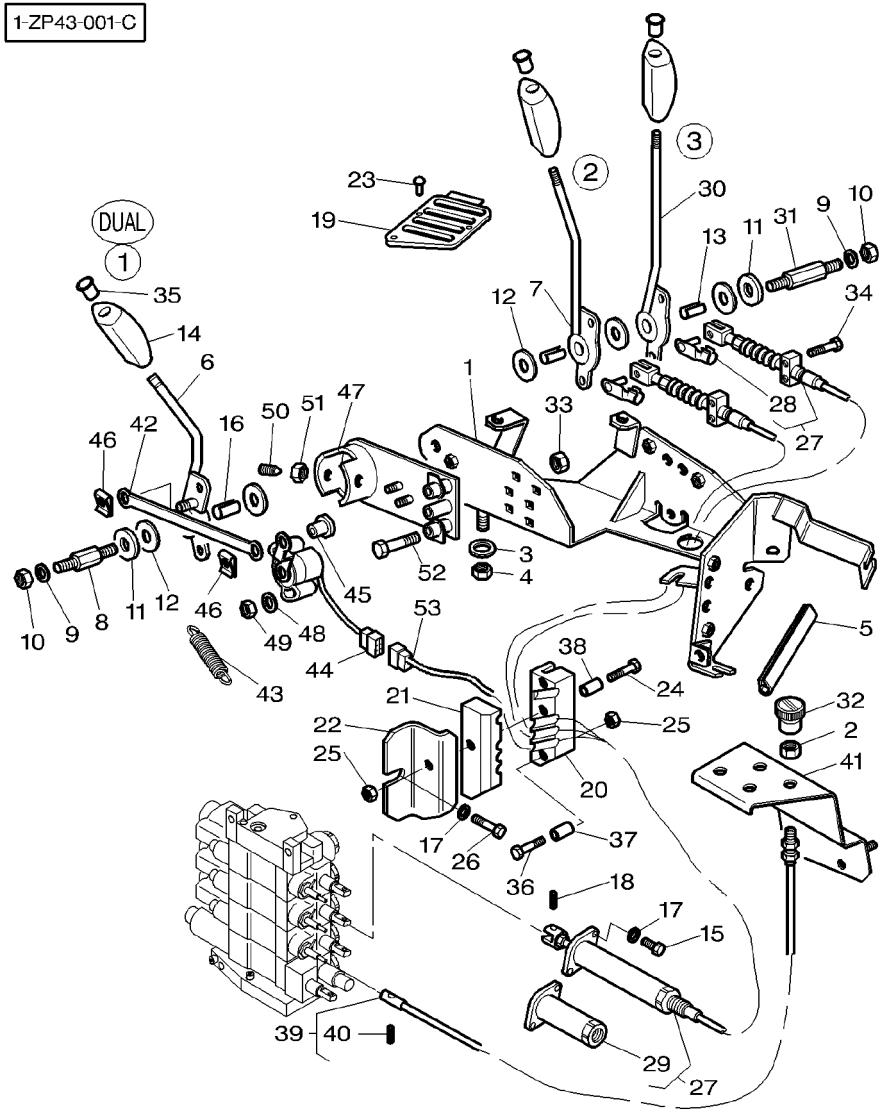

1	3778480M91		**1**	SUPPORT	SUPPORT SUPPORTO	LAGERUNG DISPOS.DE SOSTEN
2	3009693X1		**3**	NUT METRIC	ECROU METRIQUE DADO METRICO	MUTTER METRISCH TUERCA METRICO
3	385361X1		**4**	WASHER METRIC	RONDELLE METR. RONDELLA METRICO	SCHEIBE METRISCH ARANDELA METRICO
4	1441461X1	M8	**4**	NUT METRIC	ECROU METRIQUE DADO METRICO	MUTTER METRISCH TUERCA METRICO
5	1684844M1	◀▶ 80MM	**1**	SEAL	JOINT ETANCHEITE PARAOLIO	DICHTRING RETEN
6	3783143M1		**1**	LEVER	LEVIER LEVA	HEBEL PALANCA
7	3778482M2		**1**	LEVER	LEVIER LEVA	HEBEL PALANCA
8	3712956M3		**1**	CLEVIS PIN	AXE PERNO D'ATTACCO	SPLINTBOLZEN BULON CILINDRICO
9	390972X1		**2**	WASHER METRIC	RONDELLE METR. RONDELLA METRICO	SCHEIBE METRISCH ARANDELA METRICO
10	1441461X1	M8	**2**	NUT METRIC	ECROU METRIQUE DADO METRICO	MUTTER METRISCH TUERCA METRICO
11	3387447M1		**2**	WASHER	RONDELLE RONDELLA	UNTERLEGSCHEIBE ARANDELA
12	3386514M1		**5**	FRICTION DISC	DISQUE FRICTION DISCO DI FRIZION	REIBSCHEIBE DISCO FRICCION
13	3713905M1		**2**	BEARING	COUSSINET CUSCINETTO	LAGER COJINETE
14	3715495M1		**3**	HANDLE	POIGNEE MANIGLIA	HANDGRIFF MANETA
15	357831X1	1/4"-20X16	**6**	SCREW	VIS VITE	SCHRAUBE TORNILLO
16	3386515M1		**1**	BEARING	COUSSINET CUSCINETTO	LAGER COJINETE
17	390971X1		**7**	WASHER METRIC	RONDELLE METR. RONDELLA METRICO	SCHEIBE METRISCH ARANDELA METRICO
18	3714223M1		**2**	CLEVIS PIN	AXE PERNO D'ATTACCO	SPLINTBOLZEN BULON CILINDRICO
19	3778487M1		**1**	GRILLE	GRILLE GRIGLIA	GRILL REJILLA
20	3712979M2		**1**	BRIDLE	BRIDE BRIGLIA	SPANNBAND BRIDA
21	3712980M2		**1**	BRIDLE	BRIDE BRIGLIA	SPANNBAND BRIDA
22	3712981M2		**1**	ANGLE	EQUERRE ANGOLO	WINKEL ANGULO
23	**3010506X1**	M5X16	**7**	SCREW	VIS VITE	SCHRAUBE TORNILLO
24	339096X1	M6X35	**2**	BOLT METRIC	BOULON METRIQUE BULLONE METRICO	MASCH.SCHRB MET PERNO METRICO
25	1441500X1		**3**	LOCKNUT	ECROU BLOCAGE AUTOBLOCCANTE	FLACHMUTTER CONTRATUERCA
26	339560X1	M6X16	**1**	SCREW METRIC	VIS METRIQUE VITE METRICA	SCHRAUBE METR TORNILLO METRICO

3 Distributors Control	With Dual Control
Commande Avec 3 Distributeurs	Avec Dual Control
Antrieb Mit 3 Verteilers	Mit Dual Control
Comandi Con 3 Distributors	Con Dual Control
Mando Con 3 Distribuidors	Con Dual Control

70-440

H351014

1-ZP43-001-C

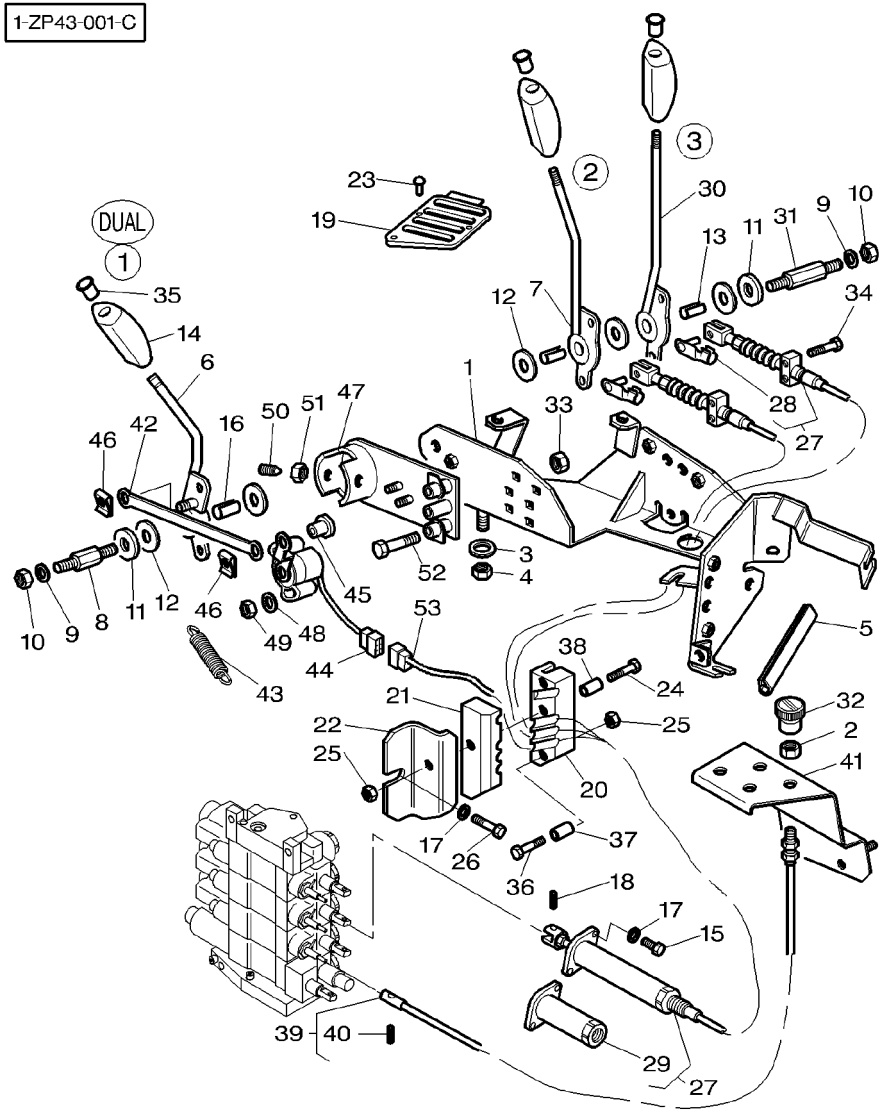

27	3778566M2	◀▶ 1310MM	
28	3600190M1	27 ◀▶ 28MM	
29	3902200M91	27	
30	3778483M2		
31	3712279M3	◀▶ 78MM	
32	3715367M1	[B]	
32	3715365M1	[C]	
32	3715364M1	[D]	
33	1441500X1	M6	
34	3009336X1	M6X55	
35	3715496M1	[B]	
35	**3715497M1**	[C]	
35	**3715498M1**	[D]	
36	1440922X1	M6X60	
37	3714645M1	∅ 8X26,5	
38	3714646M1	∅ 8X50	
39	3778560M2	◀▶ 563MM	
39	3779469M1	◀▶ 593MM	
40	3010003X1	39	
41	3779479M1		
42	3715466M1		
43	3616740M2		
44	3715459M1		
45	3783144M1		
46	3783145M1		
47	3783142M1		

2	HYDRAULIC CABLE	CABLE CDE HYDRAU CAVO HYDRAULICA	HYDRAULIKKABEL CABLE HIDRAULICO
1	CLEVIS PIN	AXE PERNO D'ATTACCO	SPLINTBOLZEN BULON CILINDRICO
1	PARTS PACK	JEU PIECES PACCO RICAMBI	SATZ TEILE PAQUETE PIEZAS
1	LEVER	LEVIER LEVA	HEBEL PALANCA
1	CLEVIS PIN	AXE PERNO D'ATTACCO	SPLINTBOLZEN BULON CILINDRICO
1	BUTTON	BOUTON PULSANTE	KNOPFTASTE PULSADOR
1	BUTTON	BOUTON PULSANTE	KNOPFTASTE PULSADOR
1	BUTTON	BOUTON PULSANTE	KNOPFTASTE PULSADOR
4	LOCKNUT	ECROU BLOCAGE AUTOBLOCCANTE	FLACHMUTTER CONTRATUERCA
2	SCREW	VIS VITE	SCHRAUBE TORNILLO
1	MUFF	CACHE MANICOTTO DEVIAN	FLANSCHMUFFE MANGUITO ACOPLAM
1	MUFF	CACHE MANICOTTO DEVIAN	FLANSCHMUFFE MANGUITO ACOPLAM
1	MUFF	CACHE MANICOTTO DEVIAN	FLANSCHMUFFE MANGUITO ACOPLAM
1	BOLT	BOULON BULLONE	MASCH.SCHRAUBE PERNO
2	SPACER	ENTRETOISE DISTANZIALE	ABSTANDSTUECK PIEZA DISTANCIA
1	SPACER	ENTRETOISE DISTANZIALE	ABSTANDSTUECK PIEZA DISTANCIA
1	CABLE	CABLE CAVO	KABEL CABLE
2	CABLE	CABLE CAVO	KABEL CABLE
1	SCREW	VIS VITE	SCHRAUBE TORNILLO
1	SUPPORT	SUPPORT SUPPORTO	LAGERUNG DISPOS.DE SOSTEN
1	ROD LINK	BIELLETTE BISCOTTINO	VERBINDG.STANGE VARILLA ENGANCHE
2	SPRING	RESSORT MOLLA	FEDER MUELLE
1	INDUCTIVE TAKER	CAPTEUR INDUCTIF SENSORE INDUTTIV	SENSOR GESCHWIN. CAPTADOR INDUCT.
1	CLEVIS PIN	AXE PERNO D'ATTACCO	SPLINTBOLZEN BULON CILINDRICO
2	THRUSTER	ARRETOIR SPINGITORE	DRUCKRING PROPULSOR
1	SUPPORT	SUPPORT SUPPORTO	LAGERUNG DISPOS.DE SOSTEN

3 Distributors Control	With Dual Control
Commande Avec 3 Distributeurs	Avec Dual Control
Antrieb Mit 3 Verteilers	Mit Dual Control
Comandi Con 3 Distributors	Con Dual Control
Mando Con 3 Distribuidors	Con Dual Control

70-440

➡ **H351014**

1-ZP43-001-C

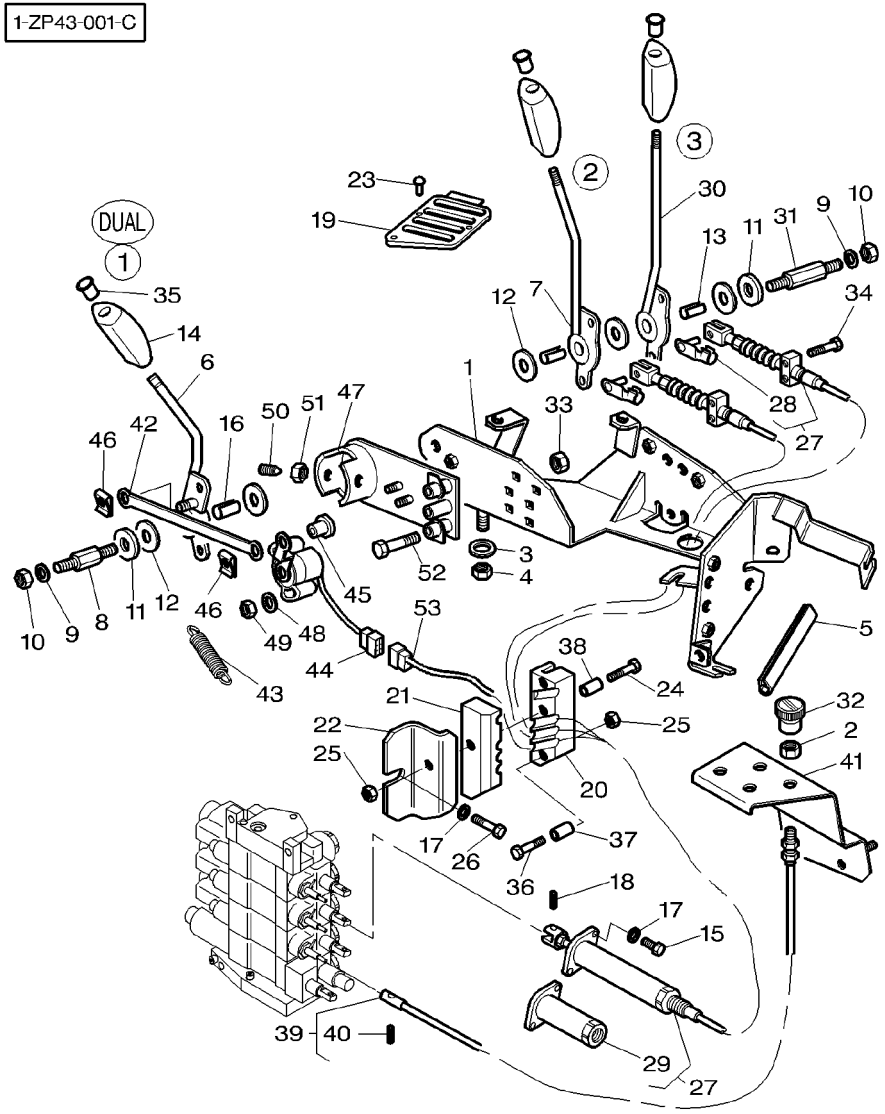

48	390469X1		**2**	WASHER METRIC	RONDELLE METR. RONDELLA METRICO	SCHEIBE METRISCH ARANDELA METRICO
49	3010477X1		**2**	NUT METRIC	ECROU METRIQUE DADO METRICO	MUTTER METRISCH TUERCA METRICO
50	3618127M2		**2**	POPPET	POUSSOIR SUPPORTO VERTIC.	VENTILKEGEL CONTRAPUNTA
51	3009696X1		**2**	NUT	ECROU DADO	MUTTER TUERCA
52	3010974X1	M6X40	**2**	SCREW	VIS VITE	SCHRAUBE TORNILLO
53		👁 90-20 No 2	**1**	HARNESS	FAISCEAU FASCIOCAVI	KABELBAUM MAZO CABLES

[B] BLACK
NOIR
SCHWARTZ
NERO
NEGRO

[C] RED
ROUGE
ROT
ROSSO
ROJA

[D] GREEN
VERT
GRUEN
VERDE
VERDE

4 Distributors Control
Commande Avec 4 Distributeurs
Antrieb Mit 4 Verteilers
Comandi Con 4 Distributors
Mando Con 4 Distribuidors

70-445

H351014

1-ZP45-001-B

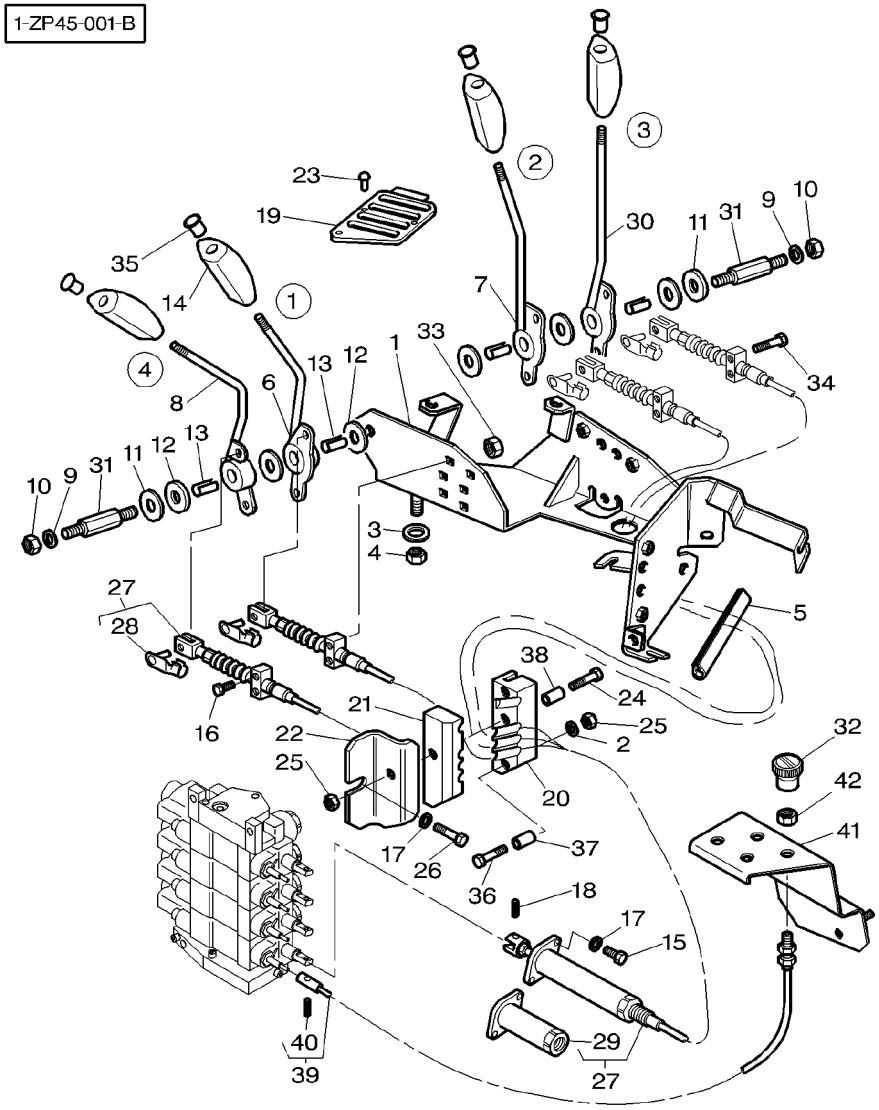

1	3778480M91		**1**	SUPPORT	SUPPORT SUPPORTO	LAGERUNG DISPOS.DE SOSTEN
2	390971X1		**2**	WASHER METRIC	RONDELLE METR. RONDELLA METRICO	SCHEIBE METRISCH ARANDELA METRICO
3	385361X1		**4**	WASHER METRIC	RONDELLE METR. RONDELLA METRICO	SCHEIBE METRISCH ARANDELA METRICO
4	1441461X1	M8	**4**	NUT METRIC	ECROU METRIQUE DADO METRICO	MUTTER METRISCH TUERCA METRICO
5	1684844M1	◄► 80MM	**1**	SEAL	JOINT ETANCHEITE PARAOLIO	DICHTRING RETEN
6	3778481M2		**1**	LEVER	LEVIER LEVA	HEBEL PALANCA
7	3778482M2		**1**	LEVER	LEVIER LEVA	HEBEL PALANCA
8	3778484M3		**1**	LEVER	LEVIER LEVA	HEBEL PALANCA
9	390972X1		**2**	WASHER METRIC	RONDELLE METR. RONDELLA METRICO	SCHEIBE METRISCH ARANDELA METRICO
10	1441461X1	M8	**2**	NUT METRIC	ECROU METRIQUE DADO METRICO	MUTTER METRISCH TUERCA METRICO
11	3387447M1		**2**	WASHER	RONDELLE RONDELLA	UNTERLEGSCHEIBE ARANDELA
12	3386514M1		**6**	FRICTION DISC	DISQUE FRICTION DISCO DI FRIZION	REIBSCHEIBE DISCO FRICCION
13	3713905M1		**4**	BEARING	COUSSINET CUSCINETTO	LAGER COJINETE
14	3715495M1		**4**	HANDLE	POIGNEE MANIGLIA	HANDGRIFF MANETA
15	357831X1	1/4"−20X16	**8**	SCREW	VIS VITE	SCHRAUBE TORNILLO
16	3009336X1	M6X55	**2**	SCREW	VIS VITE	SCHRAUBE TORNILLO
17	390971X1		**9**	WASHER METRIC	RONDELLE METR. RONDELLA METRICO	SCHEIBE METRISCH ARANDELA METRICO
18	3714223M1		**4**	CLEVIS PIN	AXE PERNO D'ATTACCO	SPLINTBOLZEN BULON CILINDRICO
19	3778488M1		**1**	GRILLE	GRILLE GRIGLIA	GRILL REJILLA
20	3712979M2		**1**	BRIDLE	BRIDE BRIGLIA	SPANNBAND BRIDA
21	3712980M2		**1**	BRIDLE	BRIDE BRIGLIA	SPANNBAND BRIDA
22	3712981M2		**1**	ANGLE	EQUERRE ANGOLO	WINKEL ANGULO
23	**3010506X1**	M5X16	**7**	SCREW	VIS VITE	SCHRAUBE TORNILLO
24	339096X1	M6X35	**2**	BOLT METRIC	BOULON METRIQUE BULLONE METRICO	MASCH.SCHRB MET PERNO METRICO
25	339030X1		**3**	NUT METRIC	ECROU METRIQUE DADO METRICO	MUTTER METRISCH TUERCA METRICO
26	339560X1	M6X16	**1**	SCREW METRIC	VIS METRIQUE VITE METRICA	SCHRAUBE METR TORNILLO METRICO

4 Distributors Control
Commande Avec 4 Distributeurs
Antrieb Mit 4 Verteilers
Comandi Con 4 Distributors
Mando Con 4 Distribuidors

70-445

H351014

1-ZP45-001-B

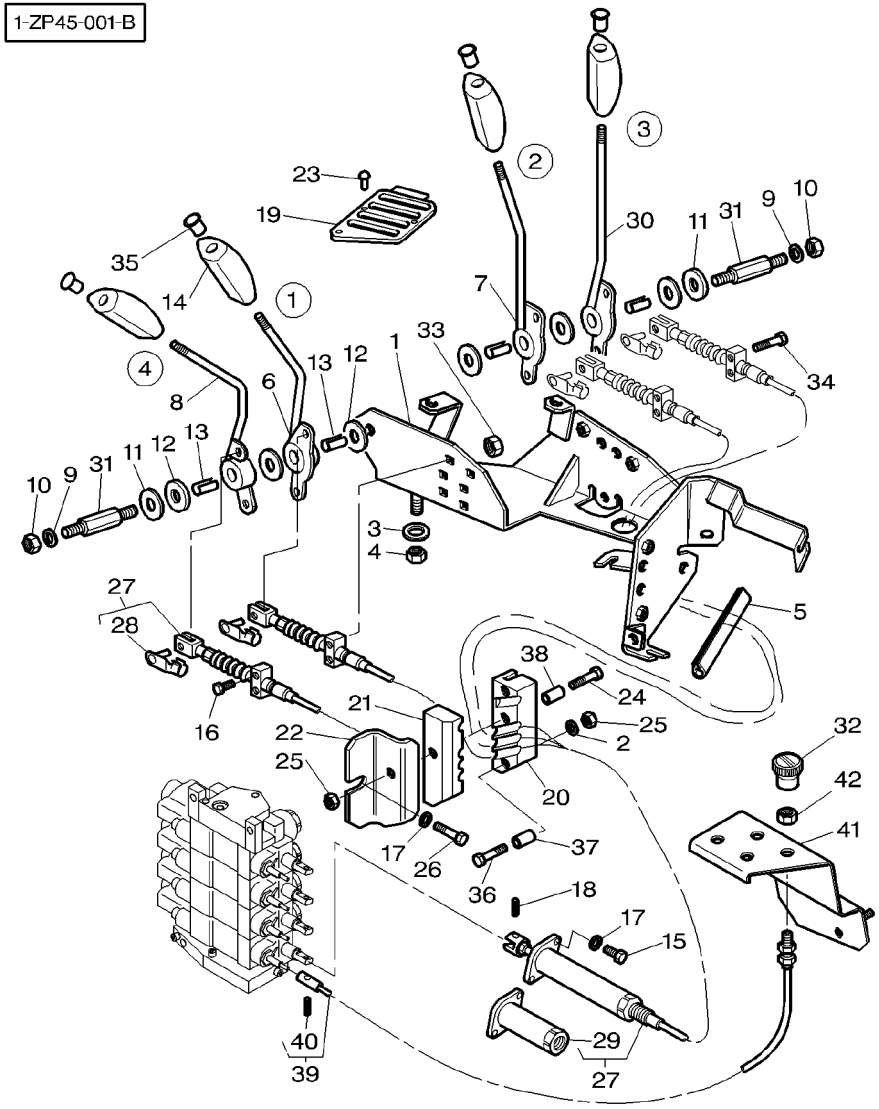

27	3778566M2	◀▶	1310MM	**4**	HYDRAULIC CABLE	CABLE CDE HYDRAU CAVO HYDRAULICA	HYDRAULIKKABEL CABLE HIDRAULICO
28	3600190M1	27 ◀▶	28MM	**1**	CLEVIS PIN	AXE PERNO D'ATTACCO	SPLINTBOLZEN BULON CILINDRICO
29	3902200M91	27		**1**	PARTS PACK	JEU PIECES PACCO RICAMBI	SATZ TEILE PAQUETE PIEZAS
30	3778483M2			**1**	LEVER	LEVIER LEVA	HEBEL PALANCA
31	3712279M3	◀▶	78MM	**2**	CLEVIS PIN	AXE PERNO D'ATTACCO	SPLINTBOLZEN BULON CILINDRICO
32	3715366M1	[A]		**1**	BUTTON	BOUTON PULSANTE	KNOPFTASTE PULSADOR
32	3715367M1	[B]		**1**	BUTTON	BOUTON PULSANTE	KNOPFTASTE PULSADOR
32	3715365M1	[C]		**1**	BUTTON	BOUTON PULSANTE	KNOPFTASTE PULSADOR
32	3715364M1	[D]		**1**	BUTTON	BOUTON PULSANTE	KNOPFTASTE PULSADOR
33	1441500X1	M6		**4**	LOCKNUT	ECROU BLOCAGE AUTOBLOCCANTE	FLACHMUTTER CONTRATUERCA
34	3009336X1	M6X55		**2**	SCREW	VIS VITE	SCHRAUBE TORNILLO
35	3715496M1	[B]		**1**	MUFF	CACHE MANICOTTO DEVIAN	FLANSCHMUFFE MANGUITO ACOPLAM
35	**3715497M1**	[C]		**1**	MUFF	CACHE MANICOTTO DEVIAN	FLANSCHMUFFE MANGUITO ACOPLAM
35	**3715498M1**	[D]		**1**	MUFF	CACHE MANICOTTO DEVIAN	FLANSCHMUFFE MANGUITO ACOPLAM
35	**3715499M1**	[A]		**1**	MUFF	CACHE MANICOTTO DEVIAN	FLANSCHMUFFE MANGUITO ACOPLAM
36	1440922X1	M6X60		**1**	BOLT	BOULON BULLONE	MASCH.SCHRAUBE PERNO
37	3714645M1	∅	8X26,5	**2**	SPACER	ENTRETOISE DISTANZIALE	ABSTANDSTUECK PIEZA DISTANCIA
38	3714646M1	∅	8X50	**1**	SPACER	ENTRETOISE DISTANZIALE	ABSTANDSTUECK PIEZA DISTANCIA
39	3778560M2	◀▶	563MM	**2**	CABLE	CABLE CAVO	KABEL CABLE
39	3779469M1	◀▶	593MM	**2**	CABLE	CABLE CAVO	KABEL CABLE
40	3010003X1	39		**1**	SCREW	VIS VITE	SCHRAUBE TORNILLO
41	3779479M1			**1**	SUPPORT	SUPPORT SUPPORTO	LAGERUNG DISPOS.DE SOSTEN
42	3009693X1			**4**	NUT METRIC	ECROU METRIQUE DADO METRICO	MUTTER METRISCH TUERCA METRICO

[A] YELLOW
JAUNE
GELB
GIALLO
AMARILLO

4 Distributors Control
Commande Avec 4 Distributeurs
Antrieb Mit 4 Verteilers
Comandi Con 4 Distributors
Mando Con 4 Distribuidors

70-445

H351014

1-ZP45-001-B

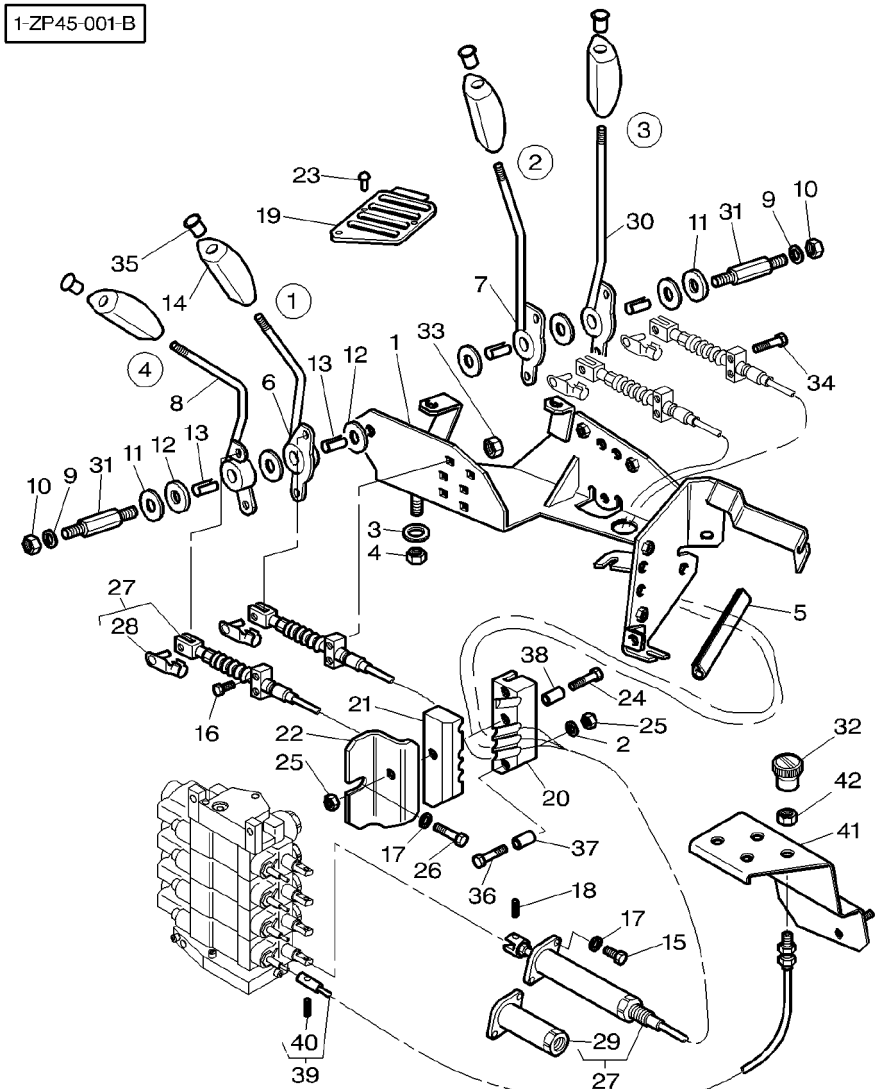

[B] BLACK
NOIR
SCHWARTZ
NERO
NEGRO

[C] RED
ROUGE
ROT
ROSSO
ROJA

[D] GREEN
VERT
GRUEN
VERDE
VERDE

4 Distributors Control
Commande Avec 4 Distributeurs
Antrieb Mit 4 Verteilers
Comandi Con 4 Distributors
Mando Con 4 Distribuidors

70-450

H351015

1-ZP45-002-A

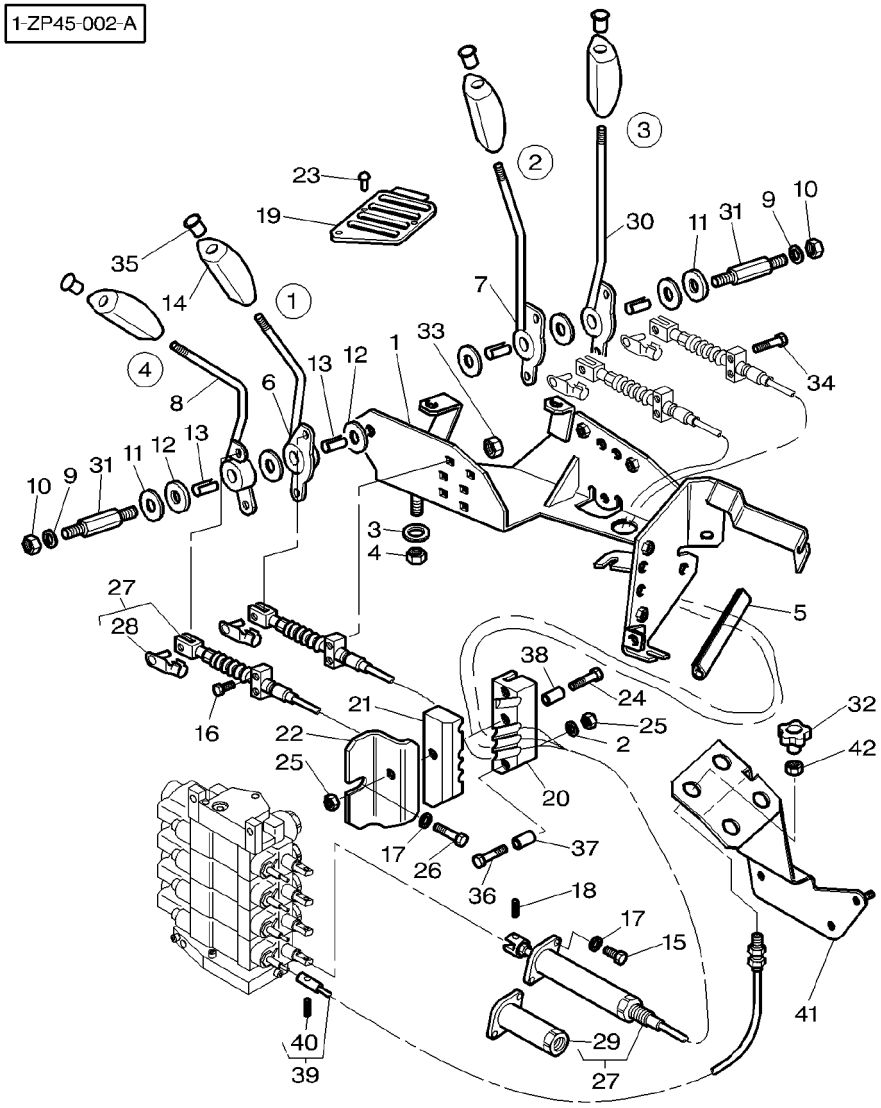

1	3778480M91		**1**	SUPPORT	SUPPORT SUPPORTO	LAGERUNG DISPOS.DE SOSTEN
2	390971X1		**2**	WASHER METRIC	RONDELLE METR. RONDELLA METRICO	SCHEIBE METRISCH ARANDELA METRICO
3	385361X1		**4**	WASHER METRIC	RONDELLE METR. RONDELLA METRICO	SCHEIBE METRISCH ARANDELA METRICO
4	1441461X1	M8	**4**	NUT METRIC	ECROU METRIQUE DADO METRICO	MUTTER METRISCH TUERCA METRICO
5	1684844M1	◄► 80MM	**1**	SEAL	JOINT ETANCHEITE PARAOLIO	DICHTRING RETEN
6	3778481M2		**1**	LEVER	LEVIER LEVA	HEBEL PALANCA
7	3778482M2		**1**	LEVER	LEVIER LEVA	HEBEL PALANCA
8	3778484M3		**1**	LEVER	LEVIER LEVA	HEBEL PALANCA
9	390972X1		**2**	WASHER METRIC	RONDELLE METR. RONDELLA METRICO	SCHEIBE METRISCH ARANDELA METRICO
10	1441461X1	M8	**2**	NUT METRIC	ECROU METRIQUE DADO METRICO	MUTTER METRISCH TUERCA METRICO
11	3387447M1		**2**	WASHER	RONDELLE RONDELLA	UNTERLEGSCHEIBE ARANDELA
12	3386514M1		**6**	FRICTION DISC	DISQUE FRICTION DISCO DI FRIZION	REIBSCHEIBE DISCO FRICCION
13	3713905M1		**4**	BEARING	COUSSINET CUSCINETTO	LAGER COJINETE
14	3715495M1		**4**	HANDLE	POIGNEE MANIGLIA	HANDGRIFF MANETA
15	357831X1	1/4"-20X16	**8**	SCREW	VIS VITE	SCHRAUBE TORNILLO
16	3009336X1	M6X55	**2**	SCREW	VIS VITE	SCHRAUBE TORNILLO
17	390971X1		**9**	WASHER METRIC	RONDELLE METR. RONDELLA METRICO	SCHEIBE METRISCH ARANDELA METRICO
18	3714223M1		**4**	CLEVIS PIN	AXE PERNO D'ATTACCO	SPLINTBOLZEN BULON CILINDRICO
19	3778488M1		**1**	GRILLE	GRILLE GRIGLIA	GRILL REJILLA
20	3712979M2		**1**	BRIDLE	BRIDE BRIGLIA	SPANNBAND BRIDA
21	3712980M2		**1**	BRIDLE	BRIDE BRIGLIA	SPANNBAND BRIDA
22	3712981M2		**1**	ANGLE	EQUERRE ANGOLO	WINKEL ANGULO
23	**3010506X1**	M5X16	**7**	SCREW	VIS VITE	SCHRAUBE TORNILLO
24	339096X1	M6X35	**2**	BOLT METRIC	BOULON METRIQUE BULLONE METRICO	MASCH.SCHRB MET PERNO METRICO
25	339030X1		**3**	NUT METRIC	ECROU METRIQUE DADO METRICO	MUTTER METRISCH TUERCA METRICO
26	339560X1	M6X16	**1**	SCREW METRIC	VIS METRIQUE VITE METRICA	SCHRAUBE METR TORNILLO METRICO

4 Distributors Control
Commande Avec 4 Distributeurs
Antrieb Mit 4 Verteilers
Comandi Con 4 Distributors
Mando Con 4 Distribuidors

70-450

H351015

1-ZP45-002-A

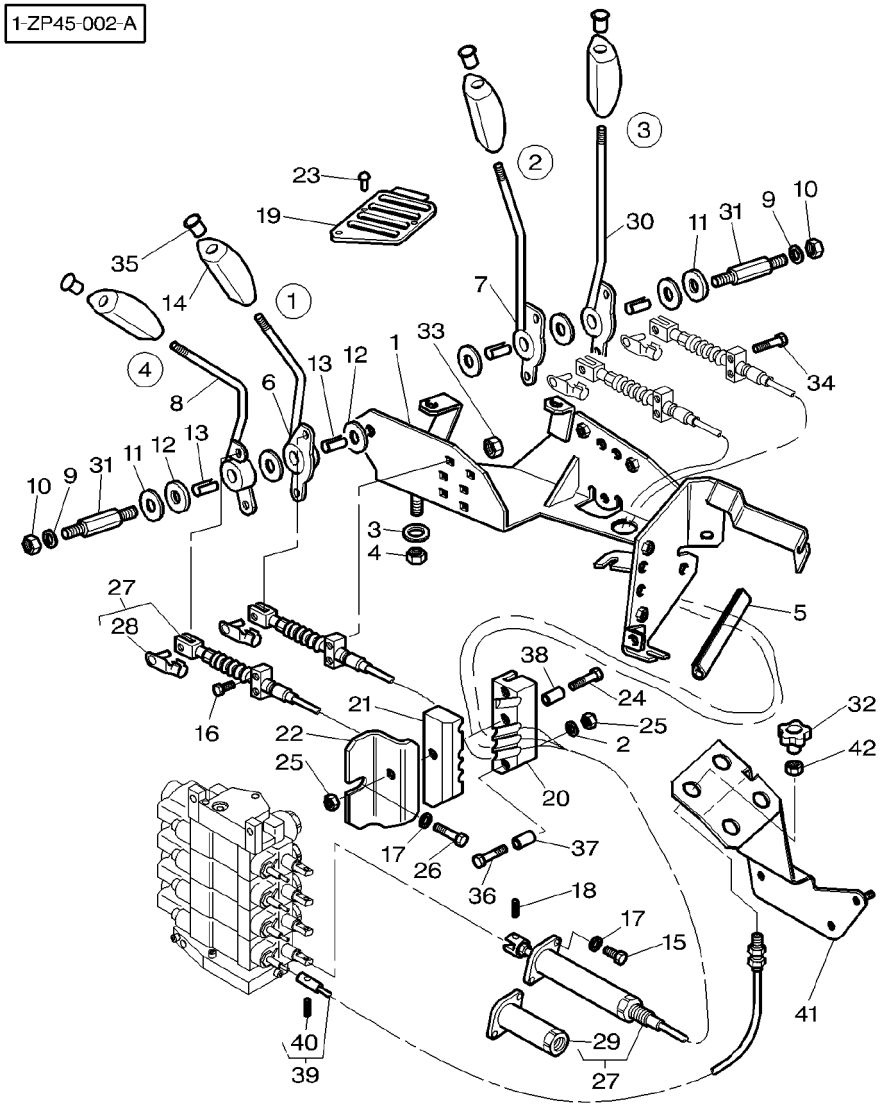

27	3778566M2	◀▶	1310MM	**4**	HYDRAULIC CABLE	CABLE CDE HYDRAU CAVO HYDRAULICA
28	3600190M1	27 ◀▶	28MM	**1**	CLEVIS PIN	AXE PERNO D'ATTACCO
29	3902200M91	27		**1**	PARTS PACK	JEU PIECES PACCO RICAMBI
30	3778483M2			**1**	LEVER	LEVIER LEVA
31	3712279M3	◀▶	78MM	**2**	CLEVIS PIN	AXE PERNO D'ATTACCO
32	3783403M1	[A]		**1**	BUTTON	BOUTON PULSANTE
32	3783400M1	[B]		**1**	BUTTON	BOUTON PULSANTE
32	3783401M1	[C]		**1**	BUTTON	BOUTON PULSANTE
32	3783402M1	[D]		**1**	BUTTON	BOUTON PULSANTE
33	1441500X1	M6		**4**	LOCKNUT	ECROU BLOCAGE AUTOBLOCCANTE
34	3009336X1	M6X55		**2**	SCREW	VIS VITE
35	3715496M1	[B]		**1**	MUFF	CACHE MANICOTTO DEVIAN
35	**3715497M1**	[C]		**1**	MUFF	CACHE MANICOTTO DEVIAN
35	**3715498M1**	[D]		**1**	MUFF	CACHE MANICOTTO DEVIAN
35	**3715499M1**	[A]		**1**	MUFF	CACHE MANICOTTO DEVIAN
36	1440922X1	M6X60		**1**	BOLT	BOULON BULLONE
37	3714645M1	∅	8X26,5	**2**	SPACER	ENTRETOISE DISTANZIALE
38	3714646M1	∅	8X50	**1**	SPACER	ENTRETOISE DISTANZIALE
39	3783229M1	◀▶	515,5MM	**2**	CABLE	CABLE CAVO
39	3783230M1	◀▶	605,5MM	**2**	CABLE	CABLE CAVO
40	3010003X1	39		**1**	SCREW	VIS VITE
41	3783151M1			**1**	PLATE	PLAQUE PIASTRA
42	3009693X1			**4**	NUT METRIC	ECROU METRIQUE DADO METRICO

[A] YELLOW
JAUNE
GELB
GIALLO
AMARILLO

					HYDRAULIKKABEL CABLE HIDRAULICO
					SPLINTBOLZEN BULON CILINDRICO
					SATZ TEILE PAQUETE PIEZAS
					HEBEL PALANCA
					SPLINTBOLZEN BULON CILINDRICO
					KNOPFTASTE PULSADOR
					KNOPFTASTE PULSADOR
					KNOPFTASTE PULSADOR
					KNOPFTASTE PULSADOR
					FLACHMUTTER CONTRATUERCA
					SCHRAUBE TORNILLO
					FLANSCHMUFFE MANGUITO ACOPLAM
					FLANSCHMUFFE MANGUITO ACOPLAM
					FLANSCHMUFFE MANGUITO ACOPLAM
					FLANSCHMUFFE MANGUITO ACOPLAM
					MASCH.SCHRAUBE PERNO
					ABSTANDSTUECK PIEZA DISTANCIA
					ABSTANDSTUECK PIEZA DISTANCIA
					KABEL CABLE
					KABEL CABLE
					SCHRAUBE TORNILLO
					PLATTE PLATO
					MUTTER METRISCH TUERCA METRICO

1-ZP45-002-A

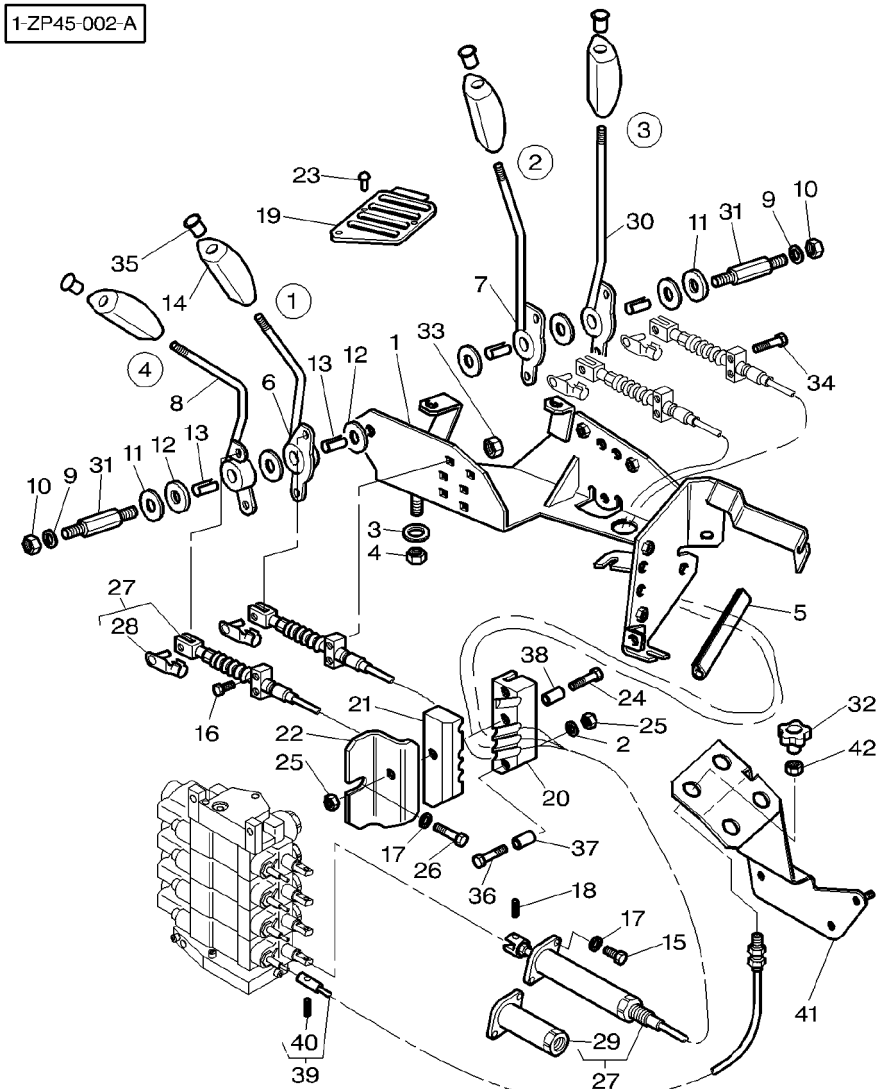

[B] BLACK
NOIR
SCHWARTZ
NERO
NEGRO

[C] RED
ROUGE
ROT
ROSSO
ROJA

[D] GREEN
VERT
GRUEN
VERDE
VERDE

4 Distributors Control	**With Dual Control**	**70-455**	**H351014**
Commande Avec 4 Distributeurs	**Avec Dual Control**		
Antrieb Mit 4 Verteilers	**Mit Dual Control**		
Comandi Con 4 Distributors	**Con Dual Control**		
Mando Con 4 Distribuidors	**Con Dual Control**		

1-ZP44-001-C

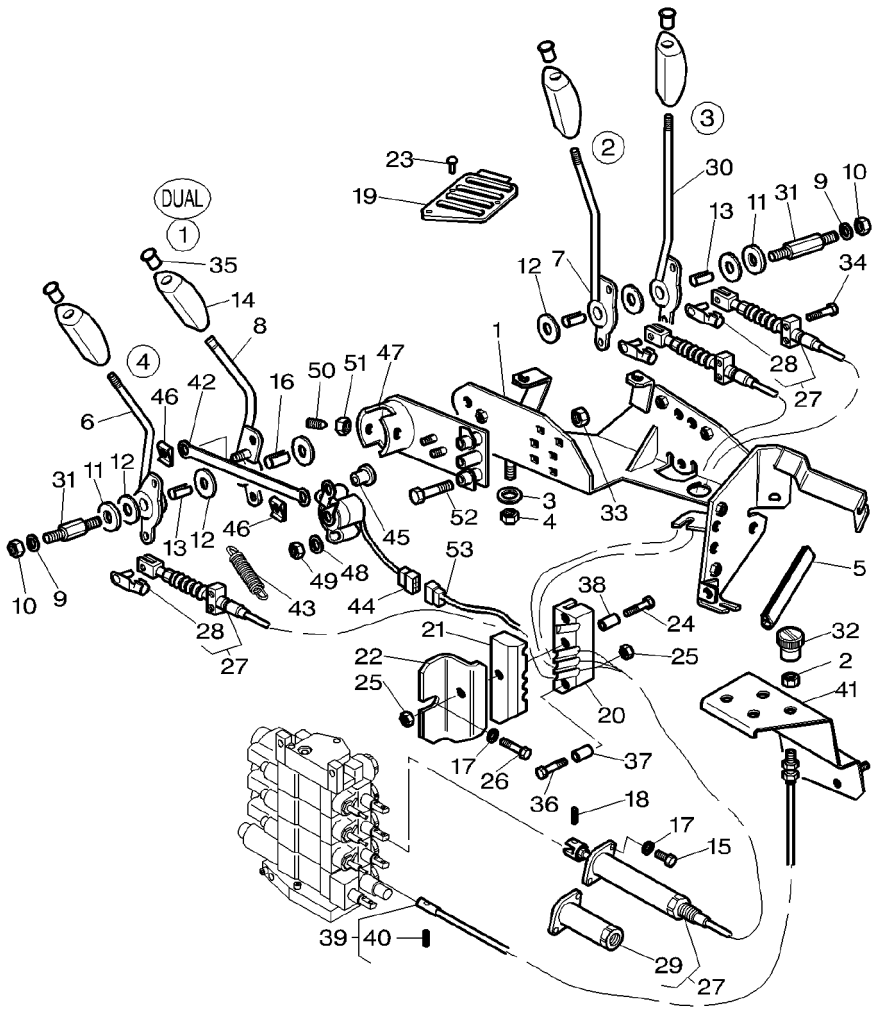

1	3778480M91		**1**	SUPPORT	SUPPORT SUPPORTO	LAGERUNG DISPOS.DE SOSTEN
2	3009693X1		**4**	NUT METRIC	ECROU METRIQUE DADO METRICO	MUTTER METRISCH TUERCA METRICO
3	385361X1		**4**	WASHER METRIC	RONDELLE METR. RONDELLA METRICO	SCHEIBE METRISCH ARANDELA METRICO
4	1441461X1	M8	**4**	NUT METRIC	ECROU METRIQUE DADO METRICO	MUTTER METRISCH TUERCA METRICO
5	1684844M1	◄► 80MM	**1**	SEAL	JOINT ETANCHEITE PARAOLIO	DICHTRING RETEN
6	3783146M1		**1**	LEVER	LEVIER LEVA	HEBEL PALANCA
7	3778482M2		**1**	LEVER	LEVIER LEVA	HEBEL PALANCA
8	3783143M1		**1**	LEVER	LEVIER LEVA	HEBEL PALANCA
9	390972X1		**2**	WASHER METRIC	RONDELLE METR. RONDELLA METRICO	SCHEIBE METRISCH ARANDELA METRICO
10	1441461X1	M8	**2**	NUT METRIC	ECROU METRIQUE DADO METRICO	MUTTER METRISCH TUERCA METRICO
11	3387447M1		**2**	WASHER	RONDELLE RONDELLA	UNTERLEGSCHEIBE ARANDELA
12	3386514M1		**6**	FRICTION DISC	DISQUE FRICTION DISCO DI FRIZION	REIBSCHEIBE DISCO FRICCION
13	3713905M1		**3**	BEARING	COUSSINET CUSCINETTO	LAGER COJINETE
14	3715495M1		**4**	HANDLE	POIGNEE MANIGLIA	HANDGRIFF MANETA
15	357831X1	1/4"-20X16	**8**	SCREW	VIS VITE	SCHRAUBE TORNILLO
16	3386515M1	M6X55	**1**	BEARING	COUSSINET CUSCINETTO	LAGER COJINETE
17	390971X1		**9**	WASHER METRIC	RONDELLE METR. RONDELLA METRICO	SCHEIBE METRISCH ARANDELA METRICO
18	3714223M1		**3**	CLEVIS PIN	AXE PERNO D'ATTACCO	SPLINTBOLZEN BULON CILINDRICO
19	3778488M1		**1**	GRILLE	GRILLE GRIGLIA	GRILL REJILLA
20	3712979M2		**1**	BRIDLE	BRIDE BRIGLIA	SPANNBAND BRIDA
21	3712980M2		**1**	BRIDLE	BRIDE BRIGLIA	SPANNBAND BRIDA
22	3712981M2		**1**	ANGLE	EQUERRE ANGOLO	WINKEL ANGULO
23	**3010506X1**	M5X16	**7**	SCREW	VIS VITE	SCHRAUBE TORNILLO
24	339096X1	M6X35	**2**	BOLT METRIC	BOULON METRIQUE BULLONE METRICO	MASCH.SCHRB MET PERNO METRICO
25	1441500X1		**3**	LOCKNUT	ECROU BLOCAGE AUTOBLOCCANTE	FLACHMUTTER CONTRATUERCA
26	339560X1	M6X16	**1**	SCREW METRIC	VIS METRIQUE VITE METRICA	SCHRAUBE METR TORNILLO METRICO

4 Distributors Control	With Dual Control
Commande Avec 4 Distributeurs	Avec Dual Control
Antrieb Mit 4 Verteilers	Mit Dual Control
Comandi Con 4 Distributors	Con Dual Control
Mando Con 4 Distribuidors	Con Dual Control

70-455

➡| **H351014**

1-ZP44-001-C

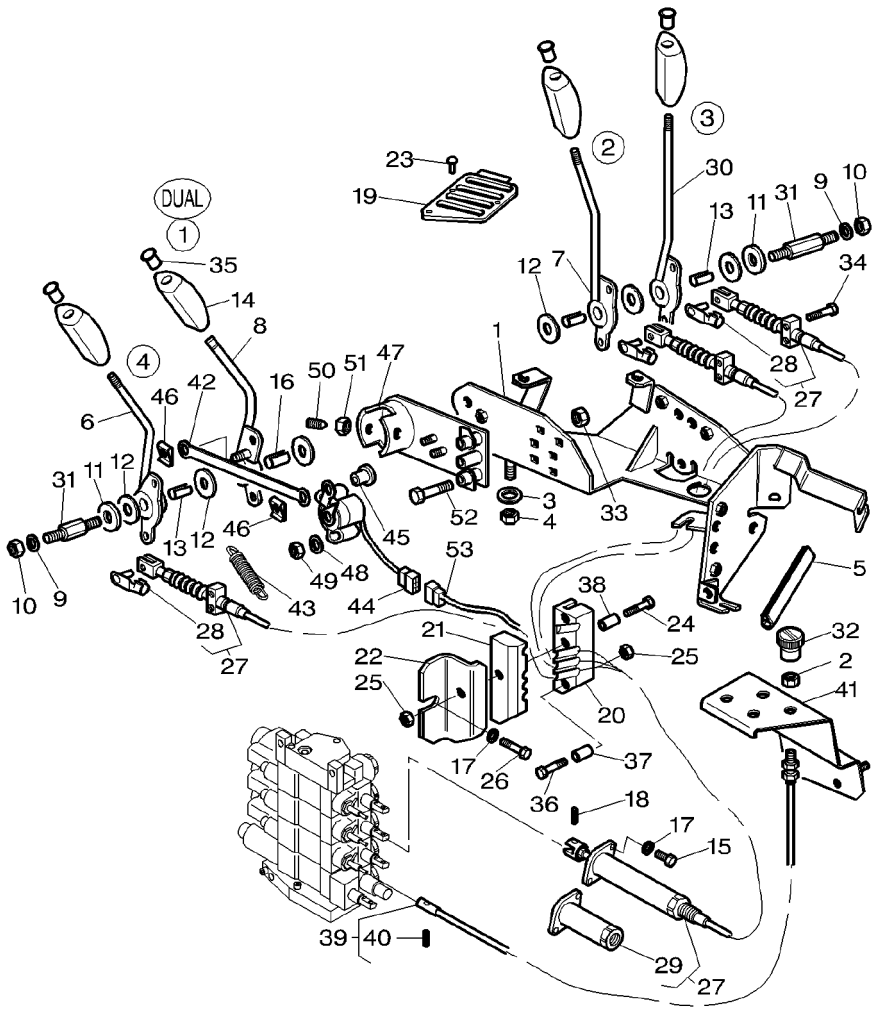

27	3778566M2	◀▶ 1310MM	3	HYDRAULIC CABLE	CABLE CDE HYDRAU CAVO HYDRAULICA	HYDRAULIKKABEL CABLE HIDRAULICO
28	3600190M1	27 ◀▶ 28MM	1	CLEVIS PIN	AXE PERNO D'ATTACCO	SPLINTBOLZEN BULON CILINDRICO
29	3902200M91	27	1	PARTS PACK	JEU PIECES PACCO RICAMBI	SATZ TEILE PAQUETE PIEZAS
30	3778483M2		1	LEVER	LEVIER LEVA	HEBEL PALANCA
31	3712279M3	◀▶ 78MM	2	CLEVIS PIN	AXE PERNO D'ATTACCO	SPLINTBOLZEN BULON CILINDRICO
32	3715366M1	[A]	1	BUTTON	BOUTON PULSANTE	KNOPFTASTE PULSADOR
32	3715367M1	[B]	1	BUTTON	BOUTON PULSANTE	KNOPFTASTE PULSADOR
32	3715365M1	[C]	1	BUTTON	BOUTON PULSANTE	KNOPFTASTE PULSADOR
32	3715364M1	[D]	1	BUTTON	BOUTON PULSANTE	KNOPFTASTE PULSADOR
33	1441500X1	M6	4	LOCKNUT	ECROU BLOCAGE AUTOBLOCCANTE	FLACHMUTTER CONTRATUERCA
34	3009336X1	M6X55	2	SCREW	VIS VITE	SCHRAUBE TORNILLO
35	3715496M1	[B]	1	MUFF	CACHE MANICOTTO DEVIAN	FLANSCHMUFFE MANGUITO ACOPLAM
35	**3715497M1**	[C]	1	MUFF	CACHE MANICOTTO DEVIAN	FLANSCHMUFFE MANGUITO ACOPLAM
35	**3715498M1**	[D]	1	MUFF	CACHE MANICOTTO DEVIAN	FLANSCHMUFFE MANGUITO ACOPLAM
35	**3715499M1**	[A]	1	MUFF	CACHE MANICOTTO DEVIAN	FLANSCHMUFFE MANGUITO ACOPLAM
36	1440922X1	M6X60	1	BOLT	BOULON BULLONE	MASCH.SCHRAUBE PERNO
37	3714645M1	∅ 8X26,5	2	SPACER	ENTRETOISE DISTANZIALE	ABSTANDSTUECK PIEZA DISTANCIA
38	3714646M1	∅ 8X50	1	SPACER	ENTRETOISE DISTANZIALE	ABSTANDSTUECK PIEZA DISTANCIA
39	3778560M2	◀▶ 563MM	2	CABLE	CABLE CAVO	KABEL CABLE
39	3779469M1	◀▶ 593MM	2	CABLE	CABLE CAVO	KABEL CABLE
40	3010003X1	39	1	SCREW	VIS VITE	SCHRAUBE TORNILLO
41	3779479M1		1	SUPPORT	SUPPORT SUPPORTO	LAGERUNG DISPOS.DE SOSTEN
42	3715466M1		1	ROD LINK	BIELLETTE BISCOTTINO	VERBINDG.STANGE VARILLA ENGANCHE
43	3616740M2		2	SPRING	RESSORT MOLLA	FEDER MUELLE
44	3715459M1		1	INDUCTIVE TAKER	CAPTEUR INDUCTIF SENSORE INDUTTIV	SENSOR GESCHWIN. CAPTADOR INDUCT.
45	3783144M1		1	CLEVIS PIN	AXE PERNO D'ATTACCO	SPLINTBOLZEN BULON CILINDRICO

4 Distributors Control	With Dual Control
Commande Avec 4 Distributeurs	Avec Dual Control
Antrieb Mit 4 Verteilers	Mit Dual Control
Comandi Con 4 Distributors	Con Dual Control
Mando Con 4 Distribuidors	Con Dual Control

70-455

➡| **H351014**

1-ZP44-001-C

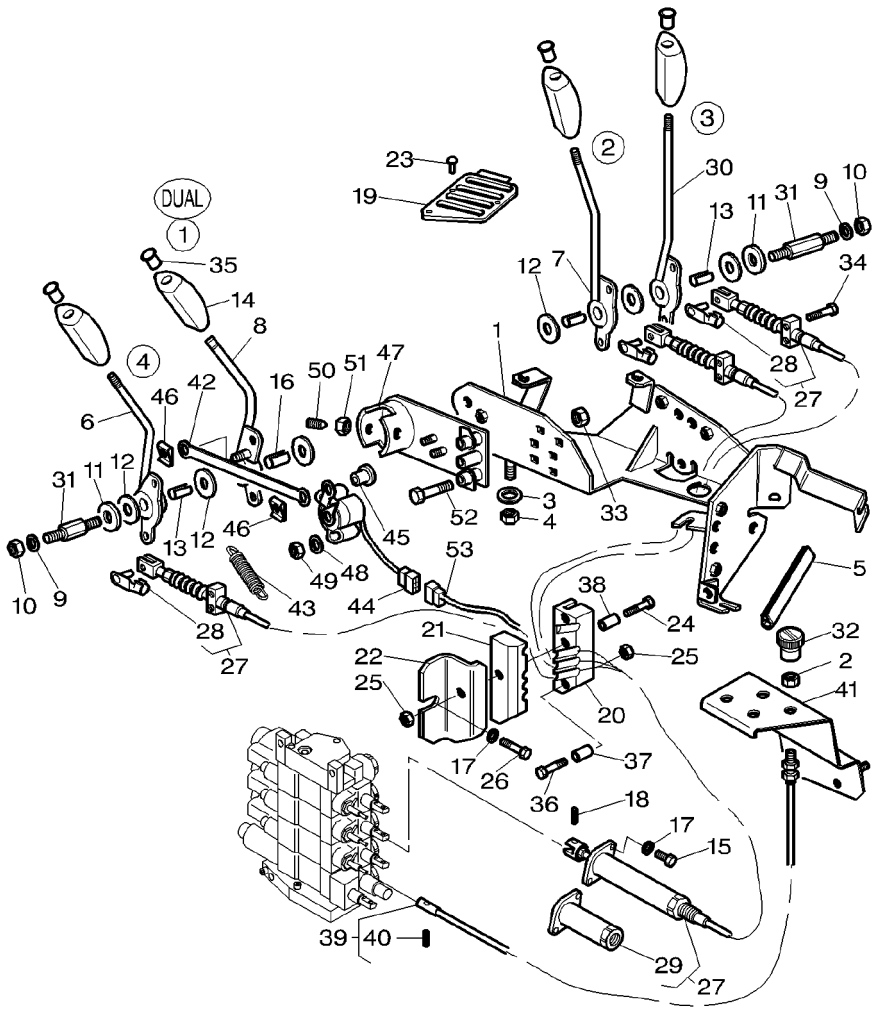

46	3783145M1		**2**	THRUSTER	ARRETOIR SPINGITORE DRUCKRING PROPULSOR
47	3783142M1		**1**	SUPPORT	SUPPORT SUPPORTO LAGERUNG DISPOS.DE SOSTEN
48	390469X1		**2**	WASHER METRIC	RONDELLE METR. RONDELLA METRICO SCHEIBE METRISCH ARANDELA METRICO
49	3010477X1		**2**	NUT METRIC	ECROU METRIQUE DADO METRICO MUTTER METRISCH TUERCA METRICO
50	3618127M2		**2**	POPPET	POUSSOIR SUPPORTO VERTIC. VENTILKEGEL CONTRAPUNTA
51	3009696X1		**2**	NUT	ECROU DADO MUTTER TUERCA
52	3010975X1	M6X60	**2**	SCREW	VIS VITE SCHRAUBE TORNILLO
53		👁 90-20 No 2	**1**	HARNESS	FAISCEAU FASCIOCAVI KABELBAUM MAZO CABLES

[A] YELLOW
JAUNE
GELB
GIALLO
AMARILLO

[B] BLACK
NOIR
SCHWARTZ
NERO
NEGRO

[C] RED
ROUGE
ROT
ROSSO
ROJA

[D] GREEN
VERT
GRUEN
VERDE
VERDE

4 Distributors Control	With Dual Control
Commande Avec 4 Distributeurs	Avec Dual Control
Antrieb Mit 4 Verteilers	Mit Dual Control
Comandi Con 4 Distributors	Con Dual Control
Mando Con 4 Distribuidors	Con Dual Control

70-460

➡ **H351015**

1-ZP44-002-B

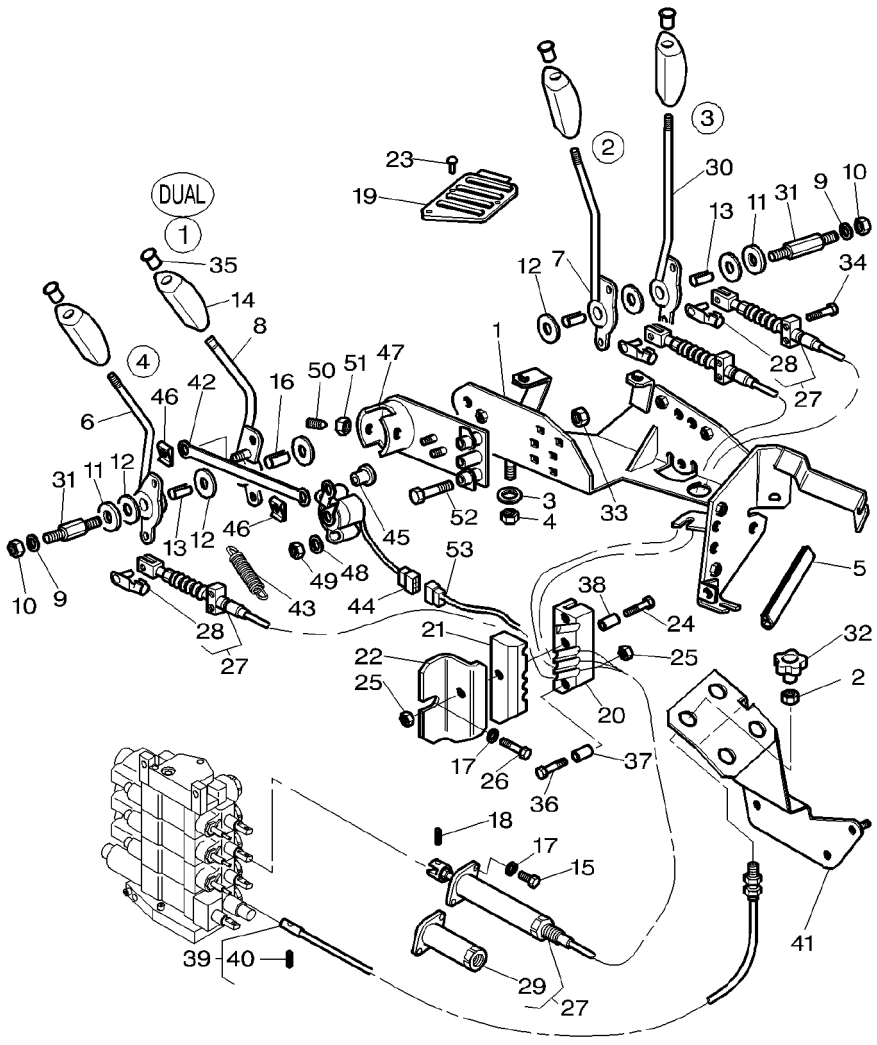

1	3778480M91		**1**	SUPPORT	SUPPORT SUPPORTO	LAGERUNG DISPOS.DE SOSTEN
2	3009693X1		**4**	NUT METRIC	ECROU METRIQUE DADO METRICO	MUTTER METRISCH TUERCA METRICO
3	385361X1		**4**	WASHER METRIC	RONDELLE METR. RONDELLA METRICO	SCHEIBE METRISCH ARANDELA METRICO
4	1441461X1	M8	**4**	NUT METRIC	ECROU METRIQUE DADO METRICO	MUTTER METRISCH TUERCA METRICO
5	1684844M1	◀▶ 80MM	**1**	SEAL	JOINT ETANCHEITE PARAOLIO	DICHTRING RETEN
6	3783146M1		**1**	LEVER	LEVIER LEVA	HEBEL PALANCA
7	3778482M2		**1**	LEVER	LEVIER LEVA	HEBEL PALANCA
8	3783143M1		**1**	LEVER	LEVIER LEVA	HEBEL PALANCA
9	390972X1		**2**	WASHER METRIC	RONDELLE METR. RONDELLA METRICO	SCHEIBE METRISCH ARANDELA METRICO
10	1441461X1	M8	**2**	NUT METRIC	ECROU METRIQUE DADO METRICO	MUTTER METRISCH TUERCA METRICO
11	3387447M1		**2**	WASHER	RONDELLE RONDELLA	UNTERLEGSCHEIBE ARANDELA
12	3386514M1		**6**	FRICTION DISC	DISQUE FRICTION DISCO DI FRIZION	REIBSCHEIBE DISCO FRICCION
13	3713905M1		**3**	BEARING	COUSSINET CUSCINETTO	LAGER COJINETE
14	3715495M1		**4**	HANDLE	POIGNEE MANIGLIA	HANDGRIFF MANETA
15	357831X1	1/4"-20X16	**8**	SCREW	VIS VITE	SCHRAUBE TORNILLO
16	3386515M1	M6X55	**1**	BEARING	COUSSINET CUSCINETTO	LAGER COJINETE
17	390971X1		**9**	WASHER METRIC	RONDELLE METR. RONDELLA METRICO	SCHEIBE METRISCH ARANDELA METRICO
18	3714223M1		**3**	CLEVIS PIN	AXE PERNO D'ATTACCO	SPLINTBOLZEN BULON CILINDRICO
19	3778488M1		**1**	GRILLE	GRILLE GRIGLIA	GRILL REJILLA
20	3712979M2		**1**	BRIDLE	BRIDE BRIGLIA	SPANNBAND BRIDA
21	3712980M2		**1**	BRIDLE	BRIDE BRIGLIA	SPANNBAND BRIDA
22	3712981M2		**1**	ANGLE	EQUERRE ANGOLO	WINKEL ANGULO
23	**3010506X1**	M5X16	**7**	SCREW	VIS VITE	SCHRAUBE TORNILLO
24	339096X1	M6X35	**2**	BOLT METRIC	BOULON METRIQUE BULLONE METRICO	MASCH.SCHRB MET PERNO METRICO
25	1441500X1		**3**	LOCKNUT	ECROU BLOCAGE AUTOBLOCCANTE	FLACHMUTTER CONTRATUERCA
26	339560X1	M6X16	**1**	SCREW METRIC	VIS METRIQUE VITE METRICA	SCHRAUBE METR TORNILLO METRICO

4 Distributors Control	With Dual Control
Commande Avec 4 Distributeurs	Avec Dual Control
Antrieb Mit 4 Verteilers	Mit Dual Control
Comandi Con 4 Distributors	Con Dual Control
Mando Con 4 Distribuidors	Con Dual Control

70-460

H351015

1-ZP44-002-B

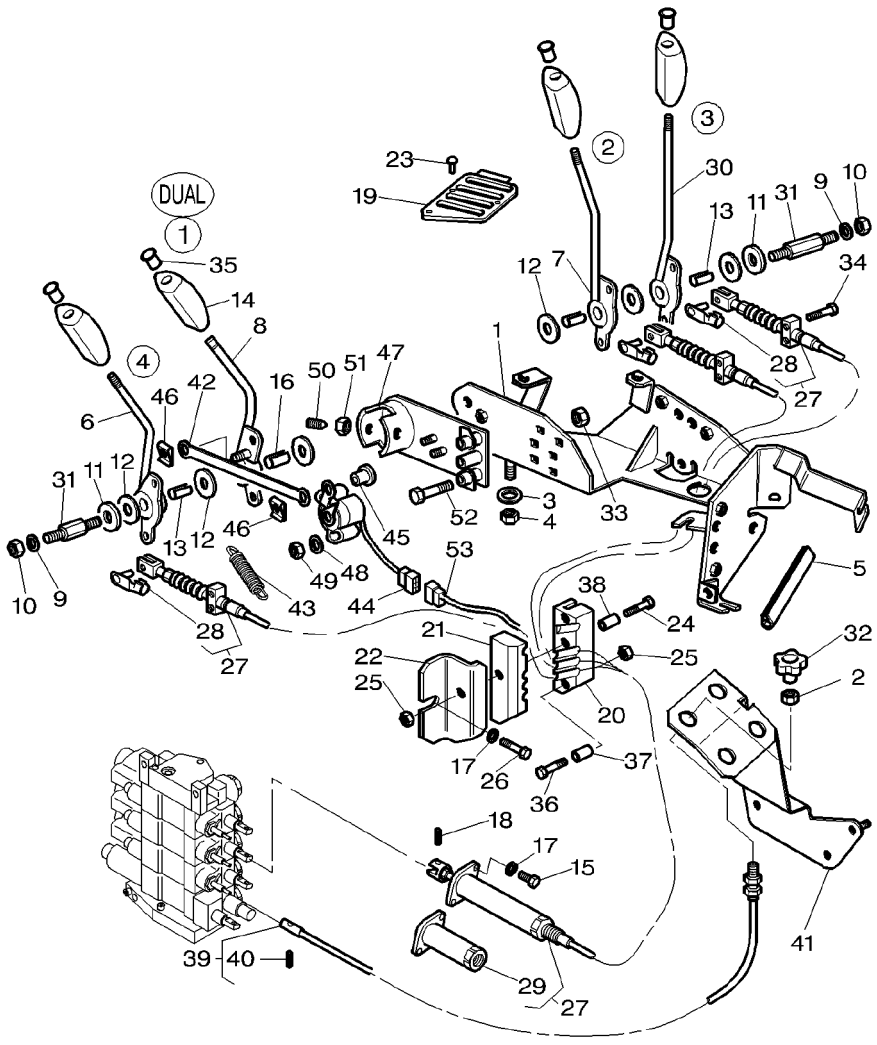

27	3778566M2	◀▶ 1310MM	
28	3600190M1	27 ◀▶ 28MM	
29	3902200M91	27	
30	3778483M2		
31	3712279M3	◀▶ 78MM	
32	3783403M1	[A]	
32	3783400M1	[B]	
32	3783401M1	[C]	
32	3783402M1	[D]	
33	1441500X1	M6	
34	3009336X1	M6X55	
35	3715496M1	[B]	
35	**3715497M1**	[C]	
35	**3715498M1**	[D]	
35	**3715499M1**	[A]	
36	1440922X1	M6X60	
37	3714645M1	∅ 8X26,5	
38	3714646M1	∅ 8X50	
39	3783229M1	◀▶ 515,5MM	
39	3783230M1	◀▶ 605,5MM	
40	3010003X1	39	
41	3783151M1		
42	3715466M1		
43	3616740M2		
44	3715459M1		
45	3783144M1		

3	HYDRAULIC CABLE	CABLE CDE HYDRAU CAVO HYDRAULICA	HYDRAULIKKABEL CABLE HIDRAULICO
1	CLEVIS PIN	AXE PERNO D'ATTACCO	SPLINTBOLZEN BULON CILINDRICO
1	PARTS PACK	JEU PIECES PACCO RICAMBI	SATZ TEILE PAQUETE PIEZAS
1	LEVER	LEVIER LEVA	HEBEL PALANCA
2	CLEVIS PIN	AXE PERNO D'ATTACCO	SPLINTBOLZEN BULON CILINDRICO
1	BUTTON	BOUTON PULSANTE	KNOPFTASTE PULSADOR
1	BUTTON	BOUTON PULSANTE	KNOPFTASTE PULSADOR
1	BUTTON	BOUTON PULSANTE	KNOPFTASTE PULSADOR
1	BUTTON	BOUTON PULSANTE	KNOPFTASTE PULSADOR
4	LOCKNUT	ECROU BLOCAGE AUTOBLOCCANTE	FLACHMUTTER CONTRATUERCA
2	SCREW	VIS VITE	SCHRAUBE TORNILLO
1	MUFF	CACHE MANICOTTO DEVIAN	FLANSCHMUFFE MANGUITO ACOPLAM
1	MUFF	CACHE MANICOTTO DEVIAN	FLANSCHMUFFE MANGUITO ACOPLAM
1	MUFF	CACHE MANICOTTO DEVIAN	FLANSCHMUFFE MANGUITO ACOPLAM
1	MUFF	CACHE MANICOTTO DEVIAN	FLANSCHMUFFE MANGUITO ACOPLAM
1	BOLT	BOULON BULLONE	MASCH.SCHRAUBE PERNO
2	SPACER	ENTRETOISE DISTANZIALE	ABSTANDSTUECK PIEZA DISTANCIA
1	SPACER	ENTRETOISE DISTANZIALE	ABSTANDSTUECK PIEZA DISTANCIA
2	CABLE	CABLE CAVO	KABEL CABLE
2	CABLE	CABLE CAVO	KABEL CABLE
1	SCREW	VIS VITE	SCHRAUBE TORNILLO
1	PLATE	PLAQUE PIASTRA	PLATTE PLATO
1	ROD LINK	BIELLETTE BISCOTTINO	VERBINDG.STANGE VARILLA ENGANCHE
2	SPRING	RESSORT MOLLA	FEDER MUELLE
1	INDUCTIVE TAKER	CAPTEUR INDUCTIF SENSORE INDUTTIV	SENSOR GESCHWIN. CAPTADOR INDUCT.
1	CLEVIS PIN	AXE PERNO D'ATTACCO	SPLINTBOLZEN BULON CILINDRICO

4 Distributors Control	With Dual Control
Commande Avec 4 Distributeurs	Avec Dual Control
Antrieb Mit 4 Verteilers	Mit Dual Control
Comandi Con 4 Distributors	Con Dual Control
Mando Con 4 Distribuidors	Con Dual Control

70-460

H351015

1-ZP44-002-B

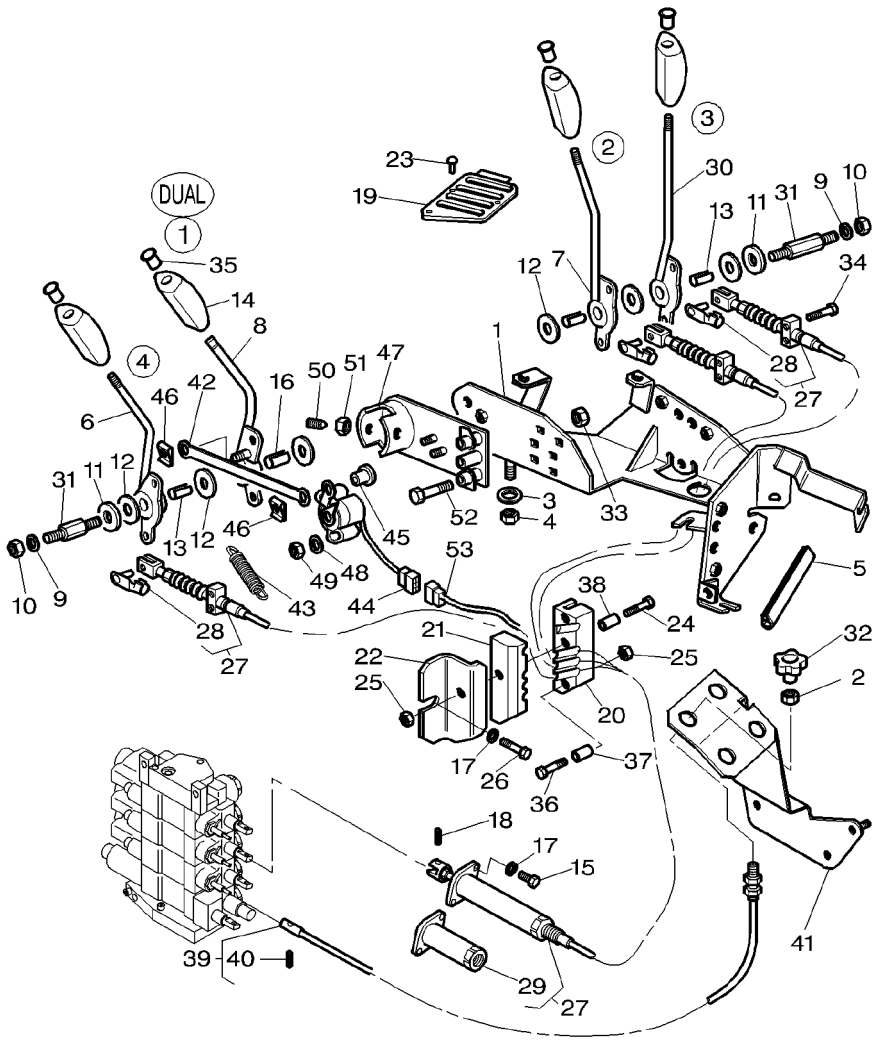

46	3783145M1		**2**	THRUSTER	ARRETOIR SPINGITORE DRUCKRING PROPULSOR
47	3783142M1		**1**	SUPPORT	SUPPORT SUPPORTO LAGERUNG DISPOS.DE SOSTEN
48	390469X1		**2**	WASHER METRIC	RONDELLE METR. RONDELLA METRICO SCHEIBE METRISCH ARANDELA METRICO
49	3010477X1		**2**	NUT METRIC	ECROU METRIQUE DADO METRICO MUTTER METRISCH TUERCA METRICO
50	3618127M2		**2**	POPPET	POUSSOIR SUPPORTO VERTIC. VENTILKEGEL CONTRAPUNTA
51	3009696X1		**2**	NUT	ECROU DADO MUTTER TUERCA
52	3010975X1	M6X60	**2**	SCREW	VIS VITE SCHRAUBE TORNILLO
53		90-20 No 2	**1**	HARNESS	FAISCEAU FASCIOCAVI KABELBAUM MAZO CABLES

[A] YELLOW
JAUNE
GELB
GIALLO
AMARILLO

[B] BLACK
NOIR
SCHWARTZ
NERO
NEGRO

[C] RED
ROUGE
ROT
ROSSO
ROJA

[D] GREEN
VERT
GRUEN
VERDE
VERDE

Auxiliary Hydraulics **Hydraulique Auxiliaire** **Zusatzhydraulik** **Idraulica Ausiliare** **Sistema Hidraulico Auxiliar**	**Platform** **Plateforme** **Plattform** **Piattaforma** **Plataforma**	**70-465**

Control With 2 Distributor
Commande Avec 2 Distributeurs
Antrieb Mit 2 Verteiler
Comandi Con 2 Distributor
Mando Con 2 Distribuidor

1-ZP80-001-A

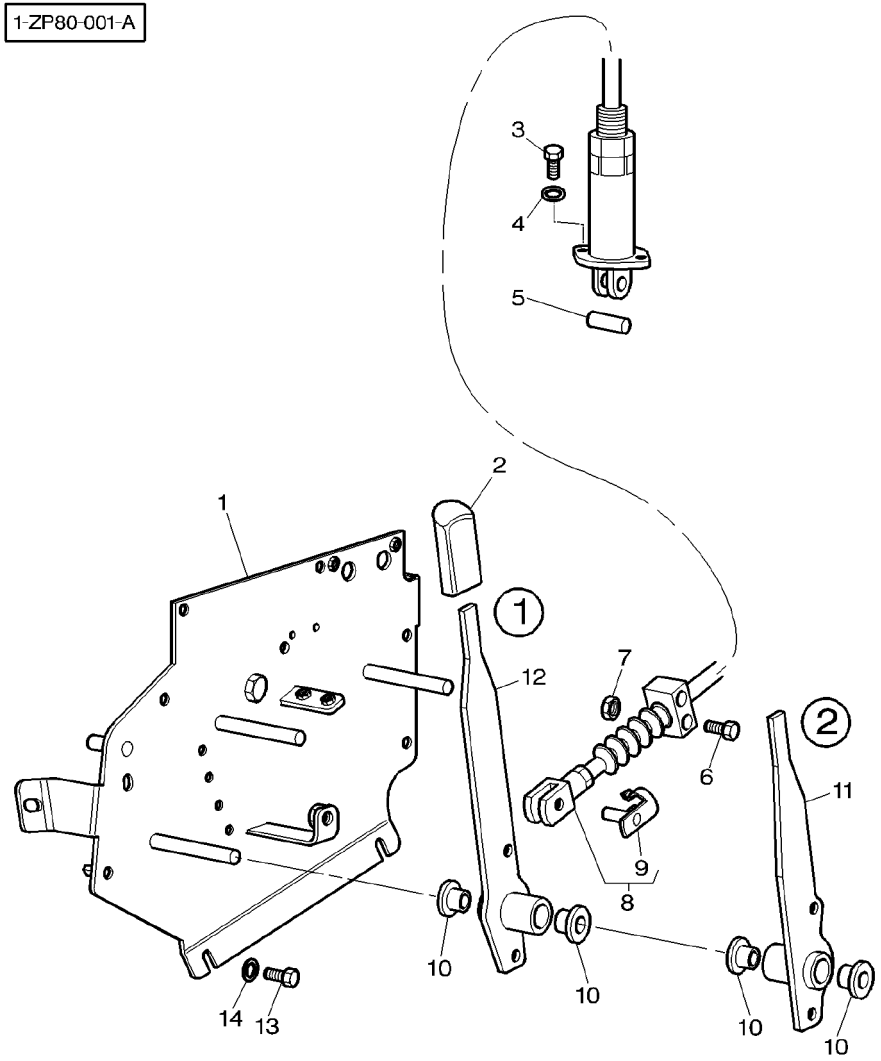

1	3778407M2		**1**	SHIELD	TOLE RIPARO
2	3712976M2		**2**	HANDLE	POIGNEE MANIGLIA
3	357831X1	1/4−20X16	**4**	SCREW	VIS VITE
4	390971X1		**4**	WASHER METRIC	RONDELLE METR. RONDELLA METRICO
5	3714223M1		**2**	CLEVIS PIN	AXE PERNO D'ATTACCO
6	339262X1		**4**	BOLT METRIC	BOULON METRIQUE BULLONE METRICO
7	339030X1		**4**	NUT METRIC	ECROU METRIQUE DADO METRICO
8	3779009M1		**2**	CABLE	CABLE CAVO
9	3600190M1	8 ◄► 28MM	**1**	CLEVIS PIN	AXE PERNO D'ATTACCO
10	3778411M1		**4**	BUSH	BAGUE BOCCOLA
11	3778403M3		**1**	LEVER	LEVIER LEVA
12	3778402M3		**1**	LEVER	LEVIER LEVA
13	339123X1	M8X20	**4**	SCREW METRIC	VIS METRIQUE VITE METRICA
14	390972X1		**4**	WASHER METRIC	RONDELLE METR. RONDELLA METRICO

					SCHILD
					BLINDAJE
					HANDGRIFF
					MANETA
					SCHRAUBE
					TORNILLO
					SCHEIBE METRISCH
					ARANDELA METRICO
					SPLINTBOLZEN
					BULON CILINDRICO
					MASCH.SCHRB MET
					PERNO METRICO
					MUTTER METRISCH
					TUERCA METRICO
					KABEL
					CABLE
					SPLINTBOLZEN
					BULON CILINDRICO
					BUCHSE
					CASQUILLO
					HEBEL
					PALANCA
					HEBEL
					PALANCA
					SCHRAUBE METR
					TORNILLO METRICO
					SCHEIBE METRISCH
					ARANDELA METRICO

Auxiliary Hydraulics	Platform
Hydraulique Auxiliaire	Plateforme
Zusatzhydraulik	Plattform
Idraulica Ausiliare	Piattaforma
Sistema Hidraulico Auxiliar	Plataforma

70-470

Controthird Distributor
Commande 3eme Distributeur
Antrieb Verteiler No 3
Comandi Distributore No 3
Mando Distribuidor No 3

1-ZP80-002-A

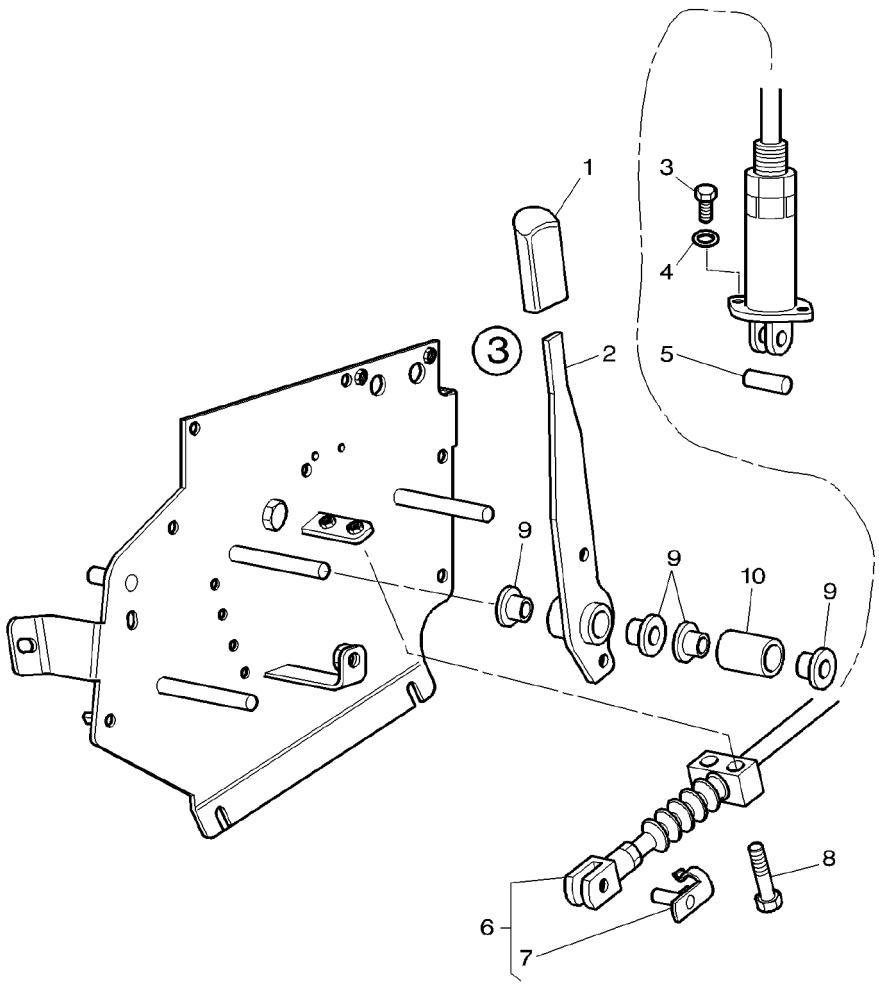

1	3712976M2		**1**	HANDLE	POIGNEE MANIGLIA	HANDGRIFF MANETA
2	3778404M3		**1**	LEVER	LEVIER LEVA	HEBEL PALANCA
3	357831X1	1/4−20X16	**2**	SCREW	VIS VITE	SCHRAUBE TORNILLO
4	390971X1		**2**	WASHER METRIC	RONDELLE METR. RONDELLA METRICO	SCHEIBE METRISCH ARANDELA METRICO
5	3714223M1		**1**	CLEVIS PIN	AXE PERNO D'ATTACCO	SPLINTBOLZEN BULON CILINDRICO
6	3779009M1		**1**	CABLE	CABLE CAVO	KABEL CABLE
7	3600190M1	6 ◄► 28MM	**1**	CLEVIS PIN	AXE PERNO D'ATTACCO	SPLINTBOLZEN BULON CILINDRICO
8	339262X1		**2**	BOLT METRIC	BOULON METRIQUE BULLONE METRICO	MASCH.SCHRB MET PERNO METRICO
9	3778411M1		**4**	BUSH	BAGUE BOCCOLA	BUCHSE CASQUILLO
10	3778412M1		**1**	TUBE	TUBE TUBO	ROHR TUBO

80

Instrument Panel And Instruments	**With Dynashift**
Tableau De Bord Et Instruments	**Avec Dynashift**
Armaturenbrett Und Armaturen	**Mit Dynashift**
Pannello Strumenti E Strumenti	**Con Dynashift**
Panel De Instrumentos Con Indicapores	**Con Dynashift**

80-5

1-ZC59-001-A

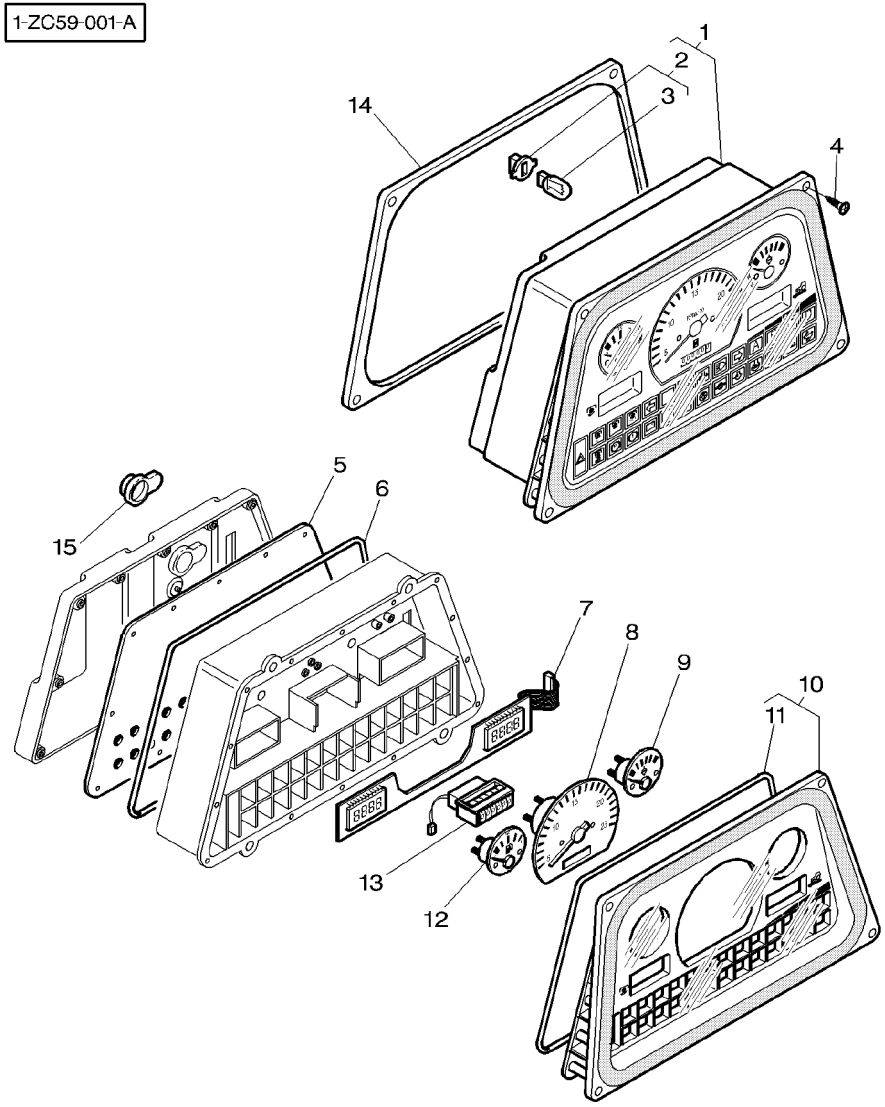

1	3783469M91	⇒ 3778683M94	
2	3713385M1	1	
3	***3405185M1***	2	
4	3010499X1	M4X16	
5	3903494M91	1	
6	3902345M1	1	
7	3902346M91	1	
8	3902347M91	1	
9	3902348M91	1	
10	3902349M92	1	
11	3902376M1	10	
12	3902377M91	1	
13	3902378M92	1	
14	3902577M1	1	
15	3715927M1	1	

1	INSTRUMENT PANEL	TABLEAU DE BORD PANNELLO STRUMEN	ARMATURENBRETT PANEL INSTRUMENT
33	LAMP SOCKET	PORTE LAMPE PORTA LAMPADA	LAMPENFASSUNG PORTA LAMPARA
1	BULB 12V 1.2W	AMPOULE 12V 1.2W BULBO 12V 1,2W	GLUEHL 12V 1.2W BOMBILLA 12V1,2W
4	SCREW METRIC	VIS METRIQUE VITE METRICA	SCHRAUBE METR TORNILLO METRICO
1	PRINTED CIRCUIT	CIRCUIT IMPRIME CIRCUITO STAMP.	GEDRUCKTESCHALTG CIRCUITO IMPRESO
1	GASKET	JOINT GUARNIZIONE	DICHTSCHEIBE EMPAQUETADURA.
1	PRINTED CIRCUIT	CIRCUIT IMPRIME CIRCUITO STAMP.	GEDRUCKTESCHALTG CIRCUITO IMPRESO
1	REV INDICATOR	COMPTE TOURS CONTROINDICATORE	DREHZAHLMESSER CUENTA REVOLUC
1	THERMOMETER	THERMOMETRE TERMOMETRO	THERMOMETER TERMOMETRO
1	PANEL	PANNEAU PANNELLO	VERKL.BLECH PANEL
1	GASKET	JOINT GUARNIZIONE	DICHTSCHEIBE EMPAQUETADURA.
1	FUEL INDICATOR	INDICATEUR FUEL INDICATORE NAFTA	KRAFTST.ANZEIGER INDIC.COMBUST
1	TRACTORMETER	ENREGISTREUR TACHIGRAFO	TRAKTORMETER TRACTOMETRO
1	GASKET	JOINT GUARNIZIONE	DICHTSCHEIBE EMPAQUETADURA.
1	TAP	OBTURATEUR TAPPO*	HAHN GRIFO

Instrument Panel And Instruments
Tableau De Bord Et Instruments
Armaturenbrett Und Armaturen
Pannello Strumenti E Strumenti
Panel De Instrumentos Con Indicapores

80-10

With Speedometer With Power Shuttle
Avec Compteur De Vitesse Avec Inverseur Sous Coupl E
Mit Tachometer Mit Unter Drehmoment
Con Tachimetro Con Sotto Coppia
Con Tacometro Con Inversor Sub Par

1-ZC15-003-A

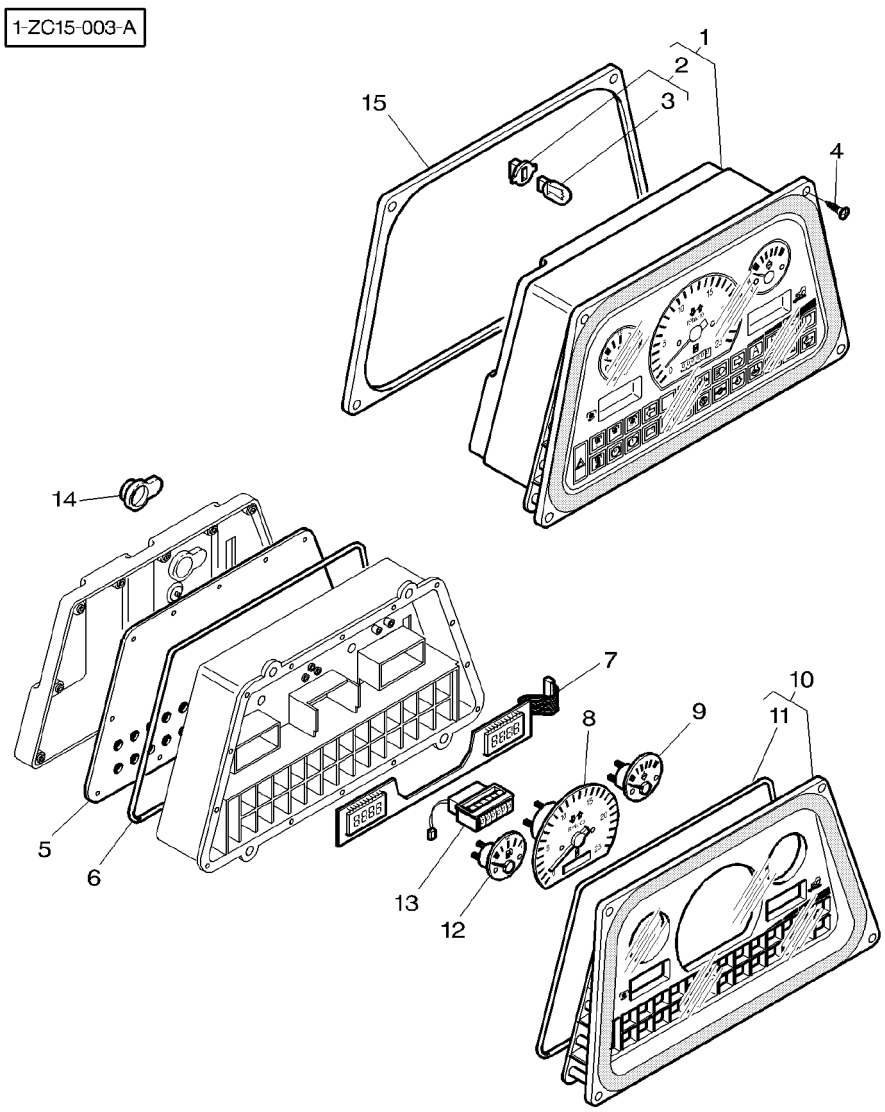

1	3783470M91		**1**	INSTRUMENT PANEL	TABLEAU DE BORD PANNELLO STRUMEN	ARMATURENBRETT PANEL INSTRUMENT
2	3713385M1	1	**33**	LAMP SOCKET	PORTE LAMPE PORTA LAMPADA	LAMPENFASSUNG PORTA LAMPARA
3	***3405185M1***	2	**33**	BULB 12V 1.2W	AMPOULE 12V 1.2W BULBO 12V 1,2W	GLUEHL 12V 1.2W BOMBILLA 12V1,2W
4	3010499X1		**4**	SCREW METRIC	VIS METRIQUE VITE METRICA	SCHRAUBE METR TORNILLO METRICO
5	3903495M91	1	**1**	PRINTED CIRCUIT	CIRCUIT IMPRIME CIRCUITO STAMP.	GEDRUCKTESCHALTG CIRCUITO IMPRESO
6	3902345M1	1	**1**	GASKET	JOINT GUARNIZIONE	DICHTSCHEIBE EMPAQUETADURA.
7	3902346M91	1	**1**	PRINTED CIRCUIT	CIRCUIT IMPRIME CIRCUITO STAMP.	GEDRUCKTESCHALTG CIRCUITO IMPRESO
8	3902380M91	1	**1**	REV INDICATOR	COMPTE TOURS CONTROINDICATORE	DREHZAHLMESSER CUENTA REVOLUC
9	3902348M91	1	**1**	THERMOMETER	THERMOMETRE TERMOMETRO	THERMOMETER TERMOMETRO
10	3902349M92	1	**1**	PANEL	PANNEAU PANNELLO	VERKL.BLECH PANEL
11	3902376M1	10	**1**	GASKET	JOINT GUARNIZIONE	DICHTSCHEIBE EMPAQUETADURA.
12	3902377M91	1	**1**	FUEL INDICATOR	INDICATEUR FUEL INDICATORE NAFTA	KRAFTST.ANZEIGER INDIC.COMBUST
13	3902378M92	1	**1**	TRACTORMETER	ENREGISTREUR TACHIGRAFO	TRAKTORMETER TRACTOMETRO
14	3715927M1	1	**1**	TAP	OBTURATEUR TAPPO*	HAHN GRIFO
15	3902577M1	1	**1**	GASKET	JOINT GUARNIZIONE	DICHTSCHEIBE EMPAQUETADURA.

Instrument Panel And Instruments	**With Dynashift**	**80-15**	**Without Speedometer**
Tableau De Bord Et Instruments	**Avec Dynashift**		**Sans Compteur De Vitesse**
Armaturenbrett Und Armaturen	**Mit Dynashift**		**Ohne Tachometer**
Pannello Strumenti E Strumenti	**Con Dynashift**		**Senza Tachimetro**
Panel De Instrumentos Con Indicapores	**Con Dynashift**		**Sin Tacometro**

1-ZC59-002-A

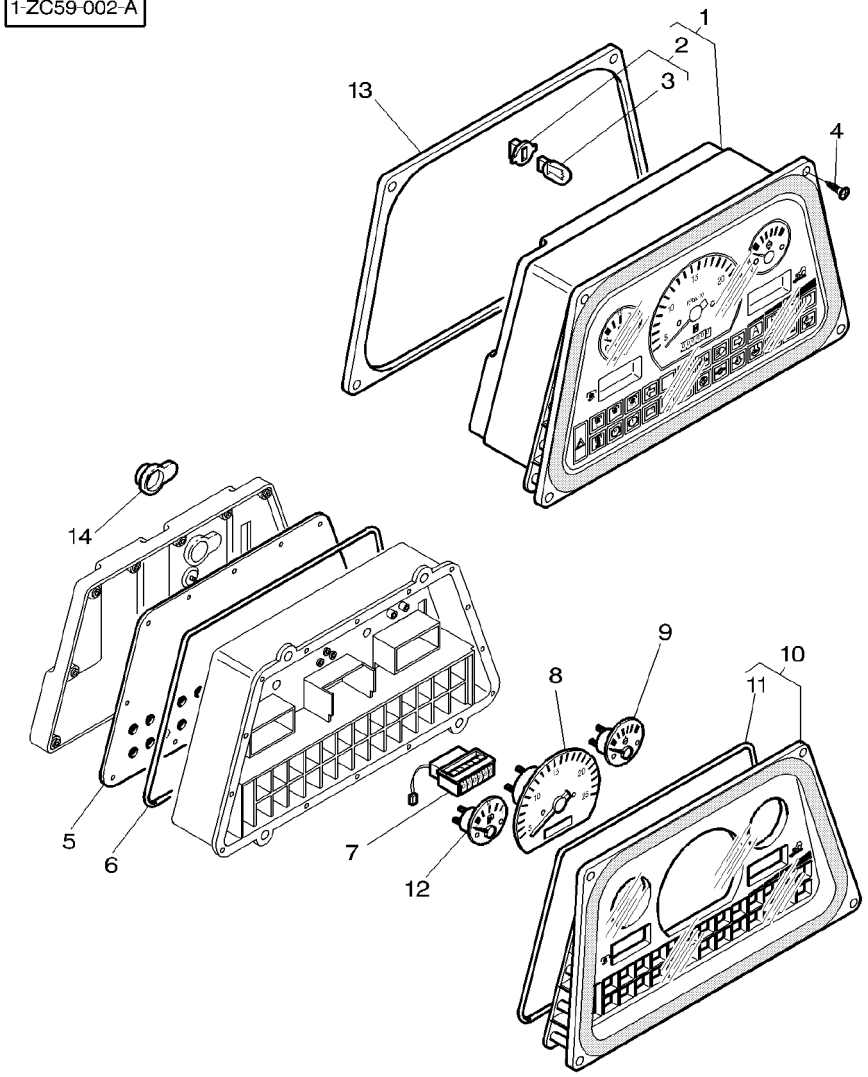

1	3778685M93		**1**	INSTRUMENT PANEL	TABLEAU DE BORD PANNELLO STRUMEN	ARMATURENBRETT PANEL INSTRUMENT
2	3713385M1	1	**33**	LAMP SOCKET	PORTE LAMPE PORTA LAMPADA	LAMPENFASSUNG PORTA LAMPARA
3	***3405185M1***	2	**33**	BULB 12V 1.2W	AMPOULE 12V 1.2W BULBO 12V 1,2W	GLUEHL 12V 1.2W BOMBILLA 12V1,2W
4	3010499X1		**4**	SCREW METRIC	VIS METRIQUE VITE METRICA	SCHRAUBE METR TORNILLO METRICO
5	3902796M91	1	**1**	PRINTED CIRCUIT	CIRCUIT IMPRIME CIRCUITO STAMP.	GEDRUCKTESCHALTG CIRCUITO IMPRESO
6	3902345M1	1	**1**	GASKET	JOINT GUARNIZIONE	DICHTSCHEIBE EMPAQUETADURA.
7	3902378M92	1	**1**	TRACTORMETER	ENREGISTREUR TACHIGRAFO	TRAKTORMETER TRACTOMETRO
8	3902347M91	1	**1**	REV INDICATOR	COMPTE TOURS CONTROINDICATORE	DREHZAHLMESSER CUENTA REVOLUC
9	3902383M91	1	**1**	THERMOMETER	THERMOMETRE TERMOMETRO	THERMOMETER TERMOMETRO
10	3902385M92	1	**1**	PANEL	PANNEAU PANNELLO	VERKL.BLECH PANEL
11	3902376M1	10	**1**	GASKET	JOINT GUARNIZIONE	DICHTSCHEIBE EMPAQUETADURA.
12	3902384M91	1	**1**	FUEL INDICATOR	INDICATEUR FUEL INDICATORE NAFTA	KRAFTST.ANZEIGER INDIC.COMBUST
13	3902577M1	1	**1**	GASKET	JOINT GUARNIZIONE	DICHTSCHEIBE EMPAQUETADURA.
14	3715927M1	1	**1**	TAP	OBTURATEUR TAPPO*	HAHN GRIFO

Instrument Panel And Instruments
Tableau De Bord Et Instruments
Armaturenbrett Und Armaturen
Pannello Strumenti E Strumenti
Panel De Instrumentos Con Indicapores

80-20

Without Speedometer With Power Shuttle
Sans Compteur De Vitesse Avec Inverseur Sous Coupl E
Ohne Tachometer Mit Unter Drehmoment
Senza Tachimetro Con Sotto Coppia
Sin Tacometro Con Inversor Sub Par

1-ZC15-004-A

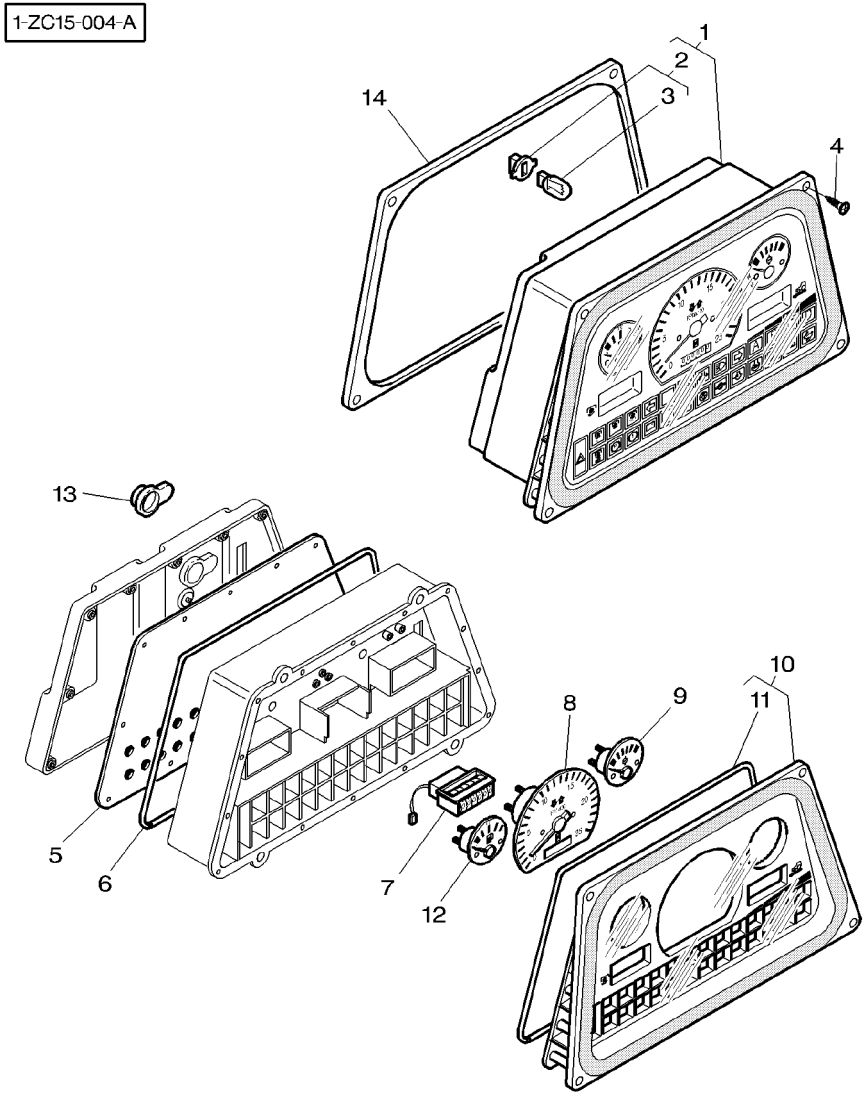

1	3780579M92		**1**	INSTRUMENT PANEL	TABLEAU DE BORD PANNELLO STRUMEN	ARMATURENBRETT PANEL INSTRUMENT
2	3713385M1	1	**33**	LAMP SOCKET	PORTE LAMPE PORTA LAMPADA	LAMPENFASSUNG PORTA LAMPARA
3	***3405185M1***	2	**33**	BULB 12V 1.2W	AMPOULE 12V 1.2W BULBO 12V 1,2W	GLUEHL 12V 1.2W BOMBILLA 12V1,2W
4	3010499X1		**4**	SCREW METRIC	VIS METRIQUE VITE METRICA	SCHRAUBE METR TORNILLO METRICO
5	3903214M91	1	**1**	PRINTED CIRCUIT	CIRCUIT IMPRIME CIRCUITO STAMP.	GEDRUCKTESCHALTG CIRCUITO IMPRESO
6	3902345M1	1	**1**	GASKET	JOINT GUARNIZIONE	DICHTSCHEIBE EMPAQUETADURA.
7	3902378M92	1	**1**	TRACTORMETER	ENREGISTREUR TACHIGRAFO	TRAKTORMETER TRACTOMETRO
8	3902380M91	1	**1**	REV INDICATOR	COMPTE TOURS CONTROINDICATORE	DREHZAHLMESSER CUENTA REVOLUC
9	3902383M91	1	**1**	THERMOMETER	THERMOMETRE TERMOMETRO	THERMOMETER TERMOMETRO
10	3902385M92	1	**1**	PANEL	PANNEAU PANNELLO	VERKL.BLECH PANEL
11	3902376M1	10	**1**	GASKET	JOINT GUARNIZIONE	DICHTSCHEIBE EMPAQUETADURA.
12	3902384M91	1	**1**	FUEL INDICATOR	INDICATEUR FUEL INDICATORE NAFTA	KRAFTST.ANZEIGER INDIC.COMBUST
13	3715927M1	1	**1**	TAP	OBTURATEUR TAPPO*	HAHN GRIFO
14	3902577M1	1	**1**	GASKET	JOINT GUARNIZIONE	DICHTSCHEIBE EMPAQUETADURA.

Instrument Panel And Instruments	**With Full Powershift**	**80-25**
Tableau De Bord Et Instruments	**Avec Full Powershift**	
Armaturenbrett Und Armaturen	**Mit Full Powershift**	
Pannello Strumenti E Strumenti	**Con Full Powershift**	
Panel De Instrumentos Con Indicapores	**Con Full Powershift**	

1-ZC60-001-A

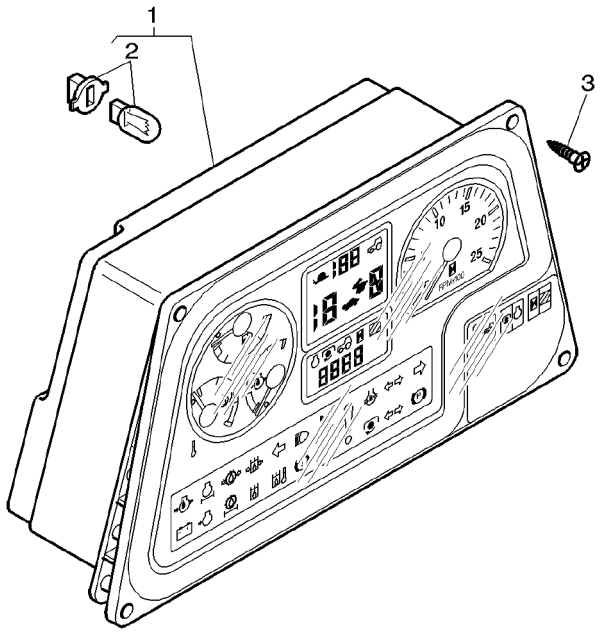

1	3783591M1		**1**	INSTRUMENT PANEL	TABLEAU DE BORD PANNELLO STRUMEN
2	***72505208***	1	**26**	BULB	AMPOULE BULBO
3	3010791X1	M4x20	**4**	SCREW	VIS VITE

					ARMATURENBRETT PANEL INSTRUMENT
					GLUEHLAMPE LAMPARA
					SCHRAUBE TORNILLO

1-ZU21-001-C

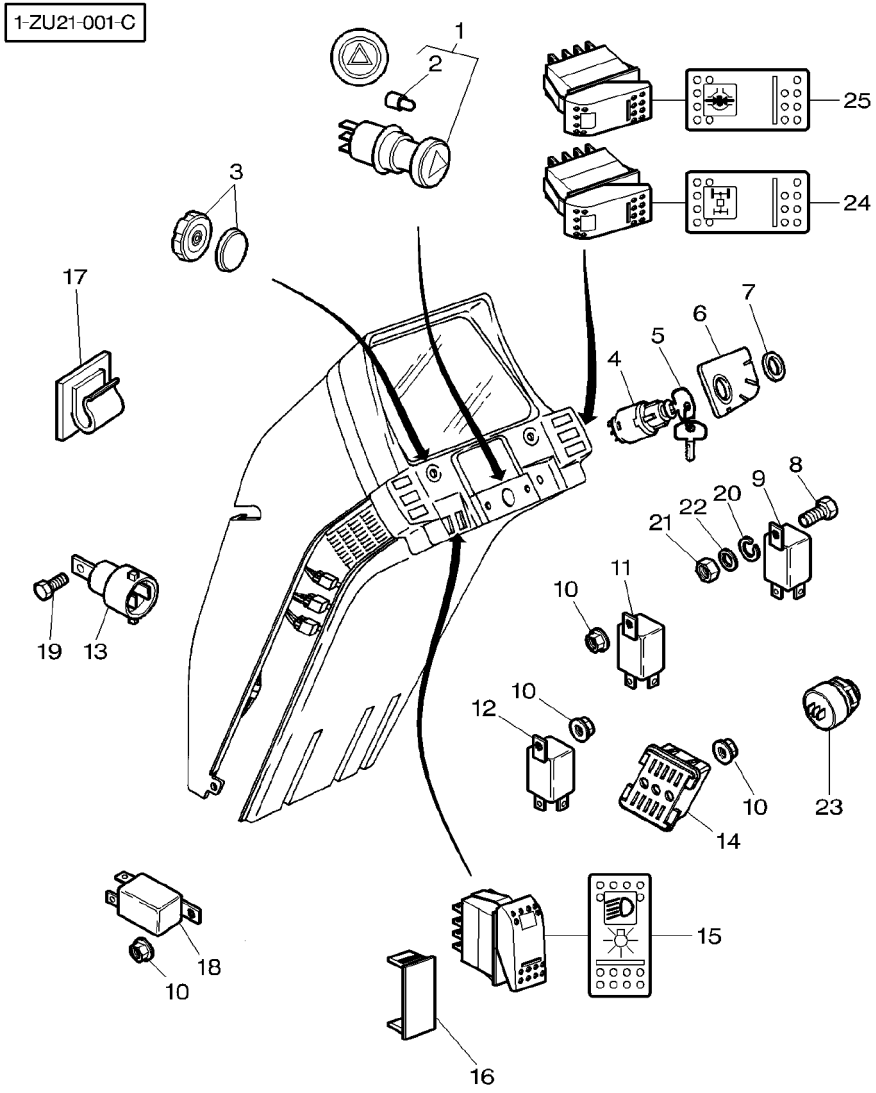

1	***3370427M91***		**1**	SWITCH	INTERRUPTEUR INTERRUTTORE	SCHALTER INTERRUPTOR
2	***3405185M1***	1	**1**	BULB 12V 1.2W	AMPOULE 12V 1.2W BULBO 12V 1,2W	GLUEHL 12V 1.2W BOMBILLA 12V1,2W
3	2191950K91		**1**	BUTTON	BOUTON PULSANTE	KNOPFTASTE PULSADOR
4	1874535M3	[A] ➡| 10−JAN−2000	**1**	SWITCH, IGNITION	CONTACT ALLUMAGE INTERRUTT.INIEZ.	MAGNETSCHALTER. INTERRUPT.CONT.
4	3779699M1	[A] ➡ 11−JAN−2000	**1**	SWITCH,INDIRECT	CONTACTEUR INTERRUTTORE IND	KONTAKTSCHALTER CONTACTOR
4	3779699M1	[B]	**1**	SWITCH,INDIRECT	CONTACTEUR INTERRUTTORE IND	KONTAKTSCHALTER CONTACTOR
5	***3813361M1***		**1**	IGNITION KEY	CLE DE CONTACT CHIAVE CONTATTO	ZUENDSCHLUESSEL LLAVE CONTACTO
6	3780466M1	[B]	**1**	PLATE	PLAQUE PIASTRA	PLATTE PLATO
6	3779720M1	(US)	**1**	PLATE	PLAQUE PIASTRA	PLATTE PLATO
7	1694534M1		**1**	NUT	ECROU DADO	MUTTER TUERCA
8	339560X1	M6X16	**1**	SCREW METRIC	VIS METRIQUE VITE METRICA	SCHRAUBE METR TORNILLO METRICO
9	3617865M1		**1**	BLINKER	CENTRALE CLIGNOT LAMPEGGIATORE	BLINKGERAET INTERMITENTE
9	3715413M1	(US)	**1**	BLINKER	CENTRALE CLIGNOT LAMPEGGIATORE	BLINKGERAET INTERMITENTE
10	3010477X1		**X**	NUT METRIC	ECROU METRIQUE DADO METRICO	MUTTER METRISCH TUERCA METRICO
11	***3387326M2***	12V−50A	**1**	RELAY	RELAIS RELE	RELAIS RELE
12	***3615652M1***		**1**	RELAY	RELAIS RELE	RELAIS RELE
12	***3615652M1***	(US)	**2**	RELAY	RELAIS RELE	RELAIS RELE
13	***3779879M1***	12V−50A	**1**	RELAY	RELAIS RELE	RELAIS RELE
14	3713103M1	➡|	**1**	CONNECTOR	BORNE MORSETTO	DOPPELNIPPEL CONECTOR
15	***3713142M2***		**1**	SWITCH,INDIRECT	CONTACTEUR INTERRUTTORE IND	KONTAKTSCHALTER CONTACTOR
16	3713151M1		**X**	TAP	OBTURATEUR TAPPO*	HAHN GRIFO
17	3582094M1		**2**	TIE	ATTACHE TRAVERSA ATTACCO	KUPPL.STANGE BARRA DE ENLACE
18	3713403M1	[C]	**1**	RELAY	RELAIS RELE	RELAIS RELE
19	390990X1	M5X12	**1**	SCREW METRIC	VIS METRIQUE VITE METRICA	SCHRAUBE METR TORNILLO METRICO
20	1441206X1		**1**	LOCK WASHER	RONDELLE FREIN ROSETTA ELASTICA	FEDERRING ARANDELA GROWER
21	339030X1		**1**	NUT METRIC	ECROU METRIQUE DADO METRICO	MUTTER METRISCH TUERCA METRICO

1-ZU21-001-C

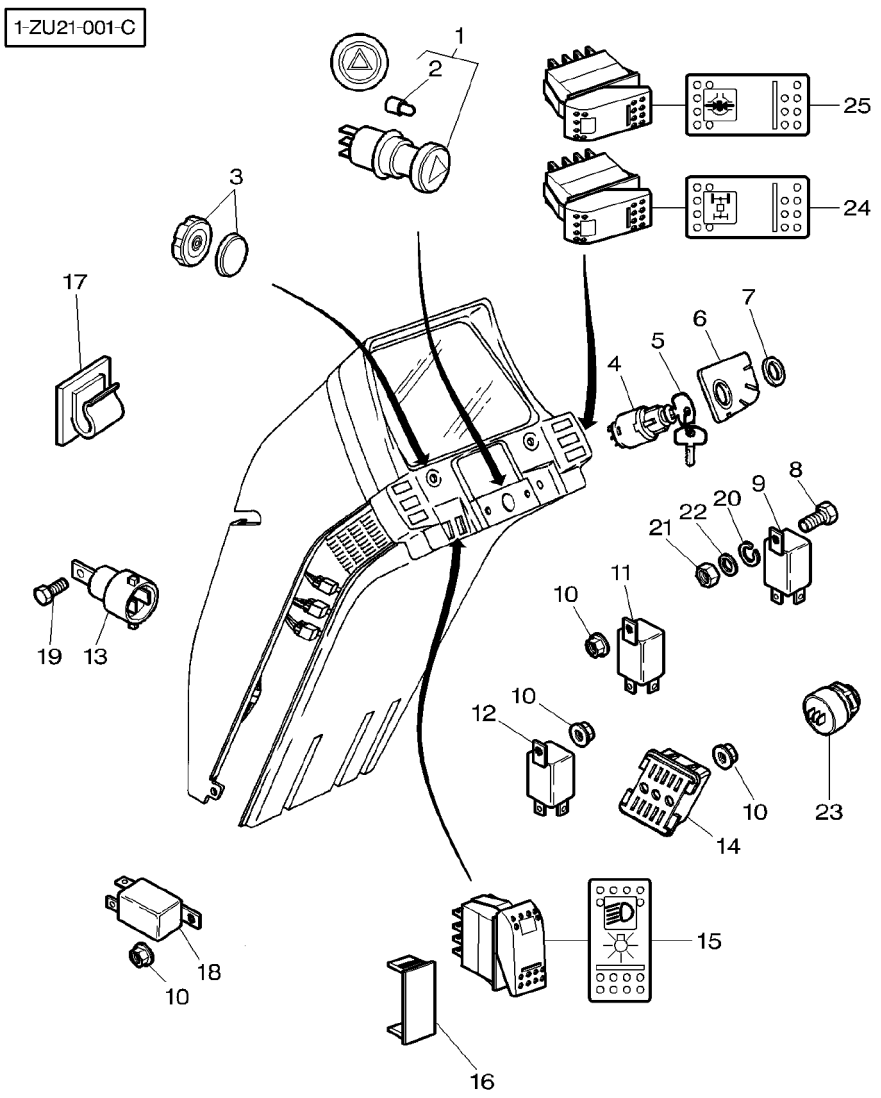

22	339375X1	**1**	LOCK WASHER	RONDELLE FREIN ROSETTA ELASTICA
23	3777567M1	**1**	BUZZER	FEDERRING ARANDELA GROWER VIBREUR CICALINO SUMMER ZUMBADOR
24	3713148M2	**1**	SWITCH,INDIRECT	KONTAKTSCHALTER CONTACTEUR INTERRUTTORE IND CONTACTOR
25	***3713149M2***	**1**	SWITCH,INDIRECT	KONTAKTSCHALTER CONTACTEUR INTERRUTTORE IND CONTACTOR

[A] TRACTOR WITH PLATFORM
TRACTEUR AVEC PLATEFORME
SCHLEPPER MIT PLATTFORM
TRATTORE CON PIATTAFORMA
TRACTOR CON PLATAFORMA

[B] TRACTOR WITH CAB
TRACTEURS AVEC CABINE
SCHLEPPER MIT KABINE
TRATTORE CON CABINA
TRACTOR CON CABINA

[C] TEMPORIZER
TEMPORISATEUR
ABWARTEND
TEMPREGGIATORE
QUE DIFIERE

Engine Harness
Faisceau Moteur
Kabelnezt Motor
Fasciocavi Di Motore
Haz De Hilos De Motor

80-35

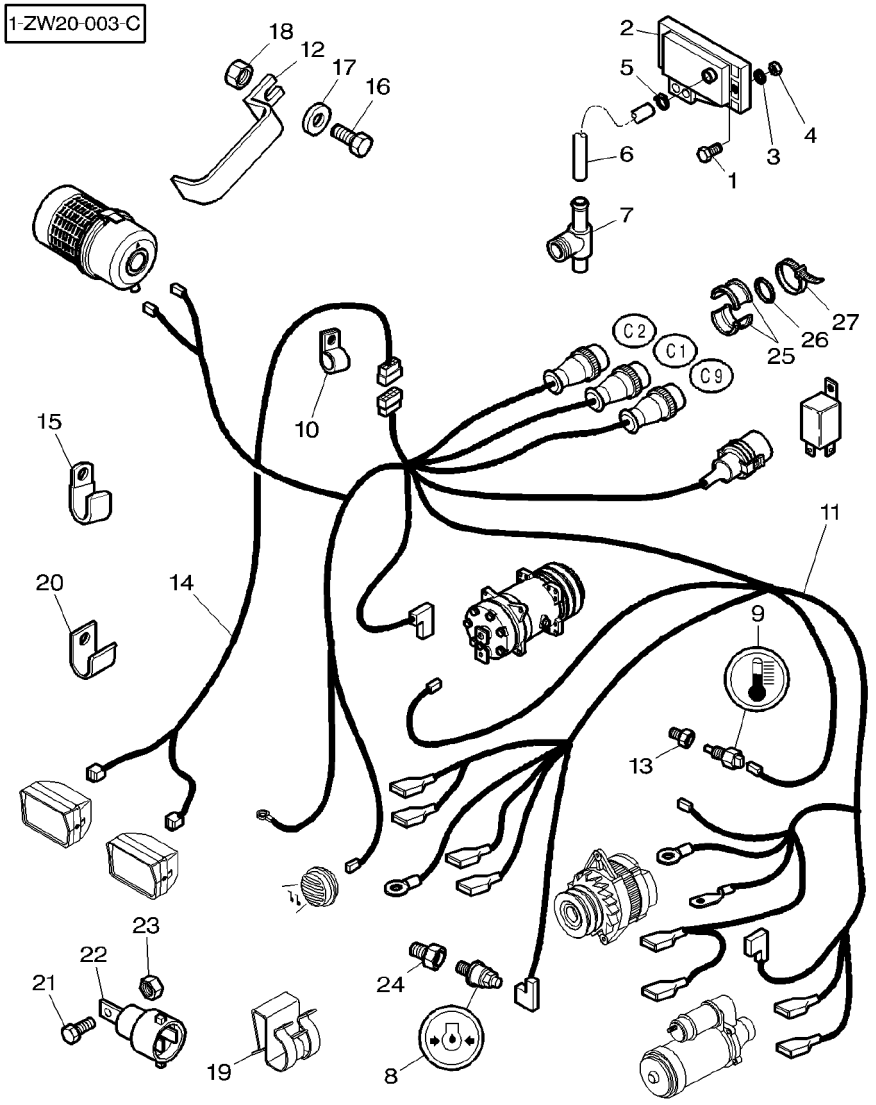

1	391883X1	M5X25	**2**	SCREW	VIS VITE	SCHRAUBE TORNILLO
2	***72502305***	[C]	**1**	TRANSMITTER	TRANSMETTEUR TRASMETTITORE	UEBERTRAGER TRANSMISOR
3	390469X1		**2**	WASHER METRIC	RONDELLE METR. RONDELLA METRICO	SCHEIBE METRISCH ARANDELA METRICO
4	1441494X1	M5	**2**	NUT METRIC	ECROU METRIQUE DADO METRICO	MUTTER METRISCH TUERCA METRICO
5	338612X1	∅ 6-12	**2**	HOSE CLIP	COLLIER DURITE STRINGITUBO	SCHLAUCHSCHELLE CLIP P.FLEXIBLE
6	3781363M1	◄► 800MM	**1**	HYDR HOSE	FLEXIBLE TUBOFLEX IDRAUL	HYDR SCHLAUCH TUBO HIDRAULICO
7	3781290M2		**1**	UNION	RACCORD RACCORDO	VERSCHRAUBUNG RACOR
8	***72512518***	[B]	**1**	SENDER	EMETTEUR EMITTENTE	GEBER EMISOR
8	***1877721M92***	[A]	**1**	PRESSURE SWITCH	MANO CONTACT INTERRUTTORE PRE	DRUCKSCHALTER INTERRUP PRESION
9	***5015257M1***	[B]	**1**	SENDER	EMETTEUR EMITTENTE	GEBER EMISOR
9	***1877731M92***	[A]	**1**	SENDER	EMETTEUR EMITTENTE	GEBER EMISOR
10	3387756M1		**X**	STRAP	PATTE CORREGGIA	LASCHE FAJA
11	3781078M3	[B]	**1**	HARNESS	FAISCEAU FASCIOCAVI	KABELBAUM MAZO CABLES
11	3781079M3	[B] (S)	**1**	HARNESS	FAISCEAU FASCIOCAVI	KABELBAUM MAZO CABLES
11	3779560M2	[A]	**1**	HARNESS	FAISCEAU FASCIOCAVI	KABELBAUM MAZO CABLES
11	3779561M2	[A] (S)	**1**	HARNESS	FAISCEAU FASCIOCAVI	KABELBAUM MAZO CABLES
12	3715996M1		**1**	BRIDLE	BRIDE BRIGLIA	SPANNBAND BRIDA
13	5015255M1	[B]	**1**	BUSH	BAGUE BOCCOLA	BUCHSE CASQUILLO
14	5015264M2		**1**	HARNESS	FAISCEAU FASCIOCAVI	KABELBAUM MAZO CABLES
15	3777938M1	∅ 21MM	**1**	STRAP	PATTE CORREGGIA	LASCHE FAJA
15	3783859M1	∅ 28MM	**1**	STRAP	PATTE CORREGGIA	LASCHE FAJA
16	339123X1	M8X20	**1**	SCREW METRIC	VIS METRIQUE VITE METRICA	SCHRAUBE METR TORNILLO METRICO
17	385361X1		**1**	WASHER METRIC	RONDELLE METR. RONDELLA METRICO	SCHEIBE METRISCH ARANDELA METRICO
18	339169X1	M8	**1**	NUT METRIC	ECROU METRIQUE DADO METRICO	MUTTER METRISCH TUERCA METRICO
19	3618680M1		**4**	FASTENER	AGRAFE LACCIO	HALTEKLAMMER CIERRE
20	3583344M1		**2**	STRAP	PATTE CORREGGIA	LASCHE FAJA

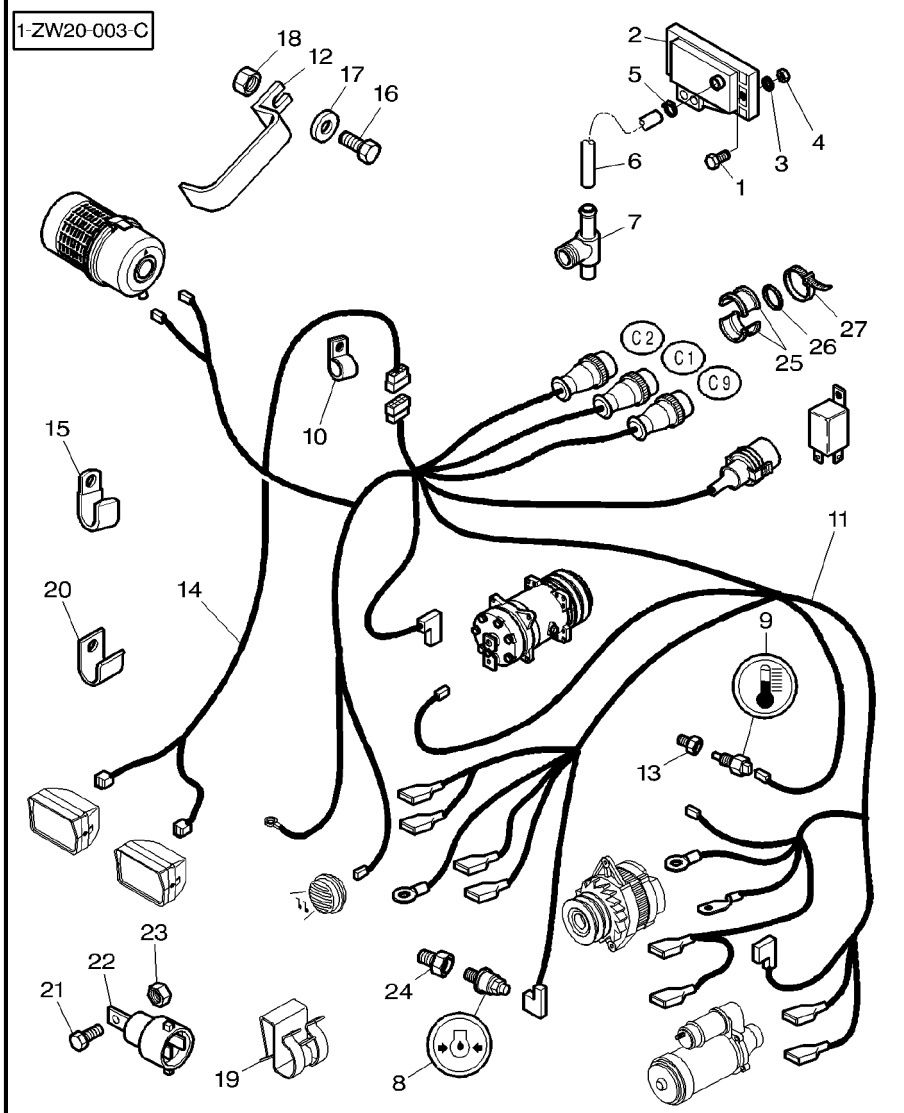

21	390990X1	M5X12	**1**	SCREW METRIC	VIS METRIQUE VITE METRICA SCHRAUBE METR TORNILLO METRICO
22	***3779879M1***	12V−50A	**1**	RELAY	RELAIS RELE RELAIS RELE
23	3010477X1	M5	**1**	NUT METRIC	ECROU METRIQUE DADO METRICO MUTTER METRISCH TUERCA METRICO
24	70917032	[B] ➡ 04−JAN−2000	**1**	UNION	RACCORD RACCORDO VERSCHRAUBUNG RACOR
25	3785087M1		**6**	BRIDLE	BRIDE BRIGLIA SPANNBAND BRIDA
26	3785088M1	∅ 22,5X2	**3**	O RING	JOINT TORIQUE ANELLO OR O−RING JUNTA TORICA
27	3619622M1		**3**	CABLE TIE	ATTACHE CABLE FASCETTA CAVI KABELBINDER ENLACE DE CABLE

[A] WITH DYNASHIFT
AVEC DYNASHIFT
MIT DYNASHIFT
CON DYNASHIFT
CON DYNASHIFT

[B] WITH FULL POWERSHIFT
AVEC FULL POWERSHIFT
MIT FULL POWERSHIFT
CON FULL POWERSHIFT
CON FULL POWERSHIFT

[C] TURBO PRESSURE TRANSDUCER
CAPTEUR PRESSION TURBO
NABENTRIEBDUCK TURBO
TRANSDUCER TURBO PRESSIONE
TRANSDUCER TURBO PRESION

Electrical Wiring
Cablage Electrique
Kabelausruestung
Equipaggiamento Elettrico
Cableado Electrico

80-40

With Electronic Lift
Avec Relevage Electronique
Mit Electronische Kraftheber
Con Sollevamento Elettronico
Con Levante Electronico

1-ZW04-002-A

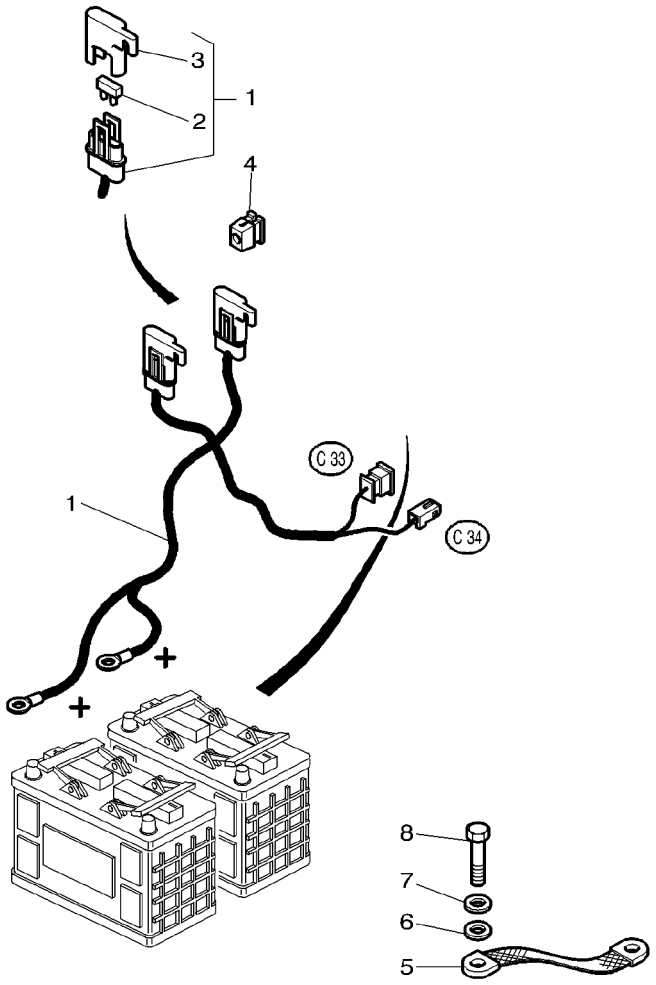

1	3779043M91		**1**	HARNESS	FAISCEAU FASCIOCAVI	KABELBAUM MAZO CABLES
2	***3620026M1***	1 15 AMP	**1**	FUSE	FUSIBLE FUSIBILE	SICHERUNG FUSIBLE
2	***3387319M1***	1 7,5 AMP	**1**	FUSE	FUSIBLE FUSIBILE	SICHERUNG FUSIBLE
3	3600224M1	1	**2**	COVER	COUVERCLE COPERCHIO	DECKEL CUBIERTA
4	3809347M1	➡| 04-JAN-2000	**2**	NUT	ECROU DADO	MUTTER TUERCA
5	1625401M2		**1**	CABLE	CABLE CAVO	KABEL CABLE
6	385362X1		**1**	WASHER METRIC	RONDELLE METR. RONDELLA METRICO	SCHEIBE METRISCH ARANDELA METRICO
7	339374X1		**1**	LOCK WASHER	RONDELLE FREIN ROSETTA ELASTICA	FEDERRING ARANDELA GROWER
8	339761X1	M8X25	**1**	SCREW METRIC	VIS METRIQUE VITE METRICA	SCHRAUBE METR TORNILLO METRICO

1-ZU16-003-B

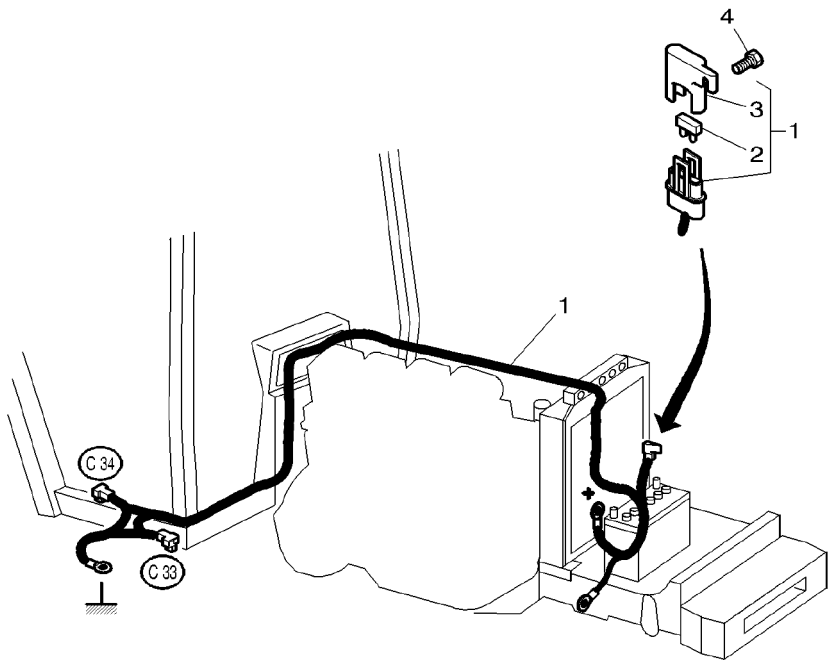

1	3779048M91		**1**	HARNESS	FAISCEAU FASCIOCAVI	KABELBAUM MAZO CABLES
2	***3620026M1***	1 15 AMP	**1**	FUSE	FUSIBLE FUSIBILE	SICHERUNG FUSIBLE
3	3600224M1	1	**1**	COVER	COUVERCLE COPERCHIO	DECKEL CUBIERTA
4	**3010506X1**	M5X16	**1**	SCREW	VIS VITE	SCHRAUBE TORNILLO

Instrument Panel Harness
Faisceau De Tableau De Bord
Kabelnezt Instrumentenbrett
Fasciocavi Di Cruscoto
Haz De Hilos De Panel De Instrumentos

80-50

With Dynashift
Avec Dynashift
Mit Dynashift
Con Dynashift
Con Dynashift

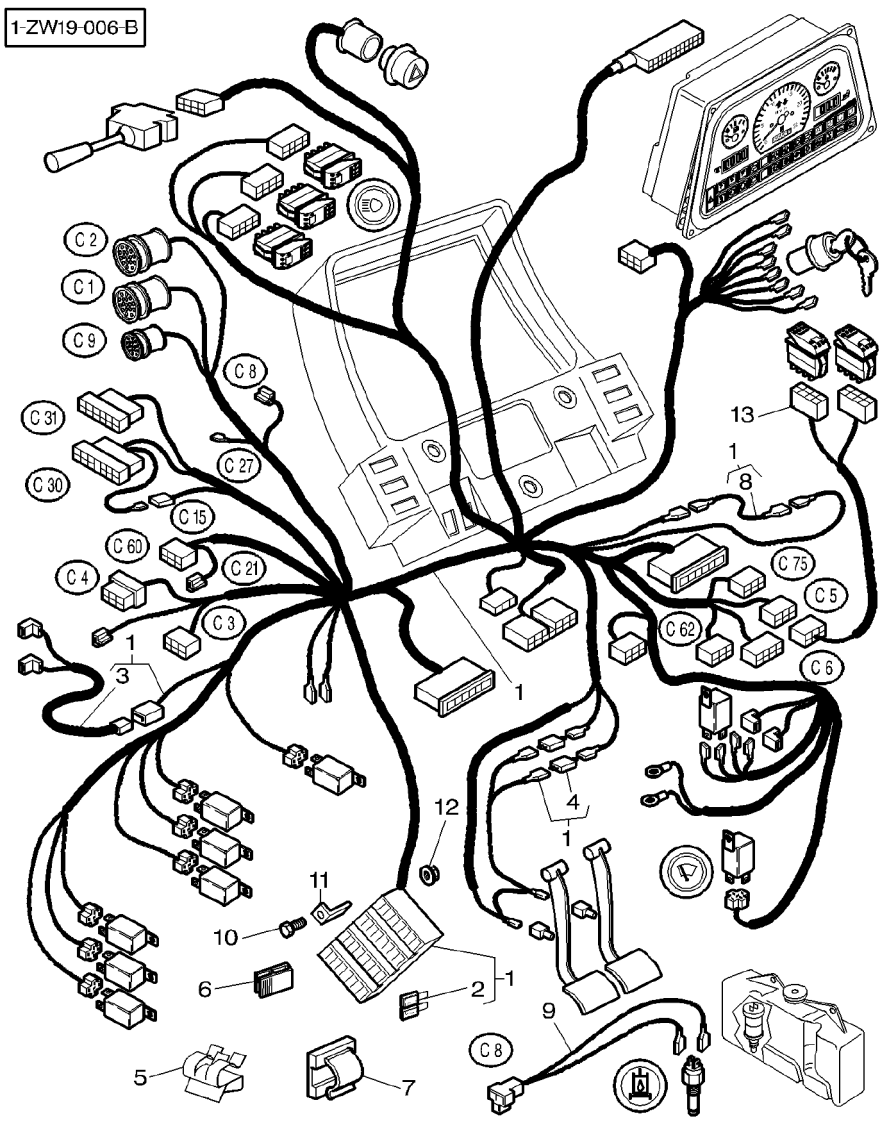

1	3779753M94	(US) (S)	1	HARNESS	FAISCEAU FASCIOCAVI	KABELBAUM MAZO CABLES
1	3779755M93	➡ J084021 (S)	1	HARNESS	FAISCEAU FASCIOCAVI	KABELBAUM MAZO CABLES
1	3779753M94	➡ J084022 (S)	1	HARNESS	FAISCEAU FASCIOCAVI	KABELBAUM MAZO CABLES
1	3779757M93	[A] ➡ 30−JUN−2000 (US) (S)	1	HARNESS	FAISCEAU FASCIOCAVI	KABELBAUM MAZO CABLES
1	3779753M94	[A] ➡ 01−JUL−2000 (US) (S)	1	HARNESS	FAISCEAU FASCIOCAVI	KABELBAUM MAZO CABLES
2	***3580868M1***	1 3 AMP	1	FUSE	FUSIBLE FUSIBILE	SICHERUNG FUSIBLE
2	***3387318M1***	1 5 AMP	X	FUSE	FUSIBLE FUSIBILE	SICHERUNG FUSIBLE
2	***3387319M1***	1 7,5 AMP	X	FUSE	FUSIBLE FUSIBILE	SICHERUNG FUSIBLE
2	***3620025M1***	1 10 AMP	X	FUSE	FUSIBLE FUSIBILE	SICHERUNG FUSIBLE
2	***3620026M1***	1 15 AMP	X	FUSE	FUSIBLE FUSIBILE	SICHERUNG FUSIBLE
2	***3387322M1***	1 25 AMP	X	FUSE	FUSIBLE FUSIBILE	SICHERUNG FUSIBLE
2	***3712661M1***	1 30 AMP	X	FUSE	FUSIBLE FUSIBILE	SICHERUNG FUSIBLE
3	3713090M1	1	1	HARNESS	FAISCEAU FASCIOCAVI	KABELBAUM MAZO CABLES
4	***3777531M1***	1 2X6AMP	2	DIODE	DIODE DIODO	DIODE DIODO
5	3618680M1		1	FASTENER	AGRAFE LACCIO	HALTEKLAMMER CIERRE
6	3389401M1		1	FASTENER	AGRAFE LACCIO	HALTEKLAMMER CIERRE
7	3760697M1		X	CLIP	CLIP FERMAGLIO	SCHELLE CRAPA RETEN
8	3781003M1	1 [B]	1	WIRE	FIL FILO DI FERRO	DRAHT HILO
9	3713812M1		1	HARNESS	FAISCEAU FASCIOCAVI	KABELBAUM MAZO CABLES
10	339160X1	M5X10	4	SCREW	VIS VITE	SCHRAUBE TORNILLO
11	3782186M1		4	SUPPORT	SUPPORT SUPPORTO	LAGERUNG DISPOS.DE SOSTEN
11	3387325M1	[C]	4	SUPPORT	SUPPORT SUPPORTO	LAGERUNG DISPOS.DE SOSTEN
12	3010477X1		4	NUT METRIC	ECROU METRIQUE DADO METRICO	MUTTER METRISCH TUERCA METRICO
13	3782986M1	[C]	1	HARNESS	FAISCEAU FASCIOCAVI	KABELBAUM MAZO CABLES

Instrument Panel Harness
Faisceau De Tableau De Bord
Kabelnezt Instrumentenbrett
Fasciocavi Di Cruscoto
Haz De Hilos De Panel De Instrumentos

80-50

With Dynashift
Avec Dynashift
Mit Dynashift
Con Dynashift
Con Dynashift

1-ZW19-006-B

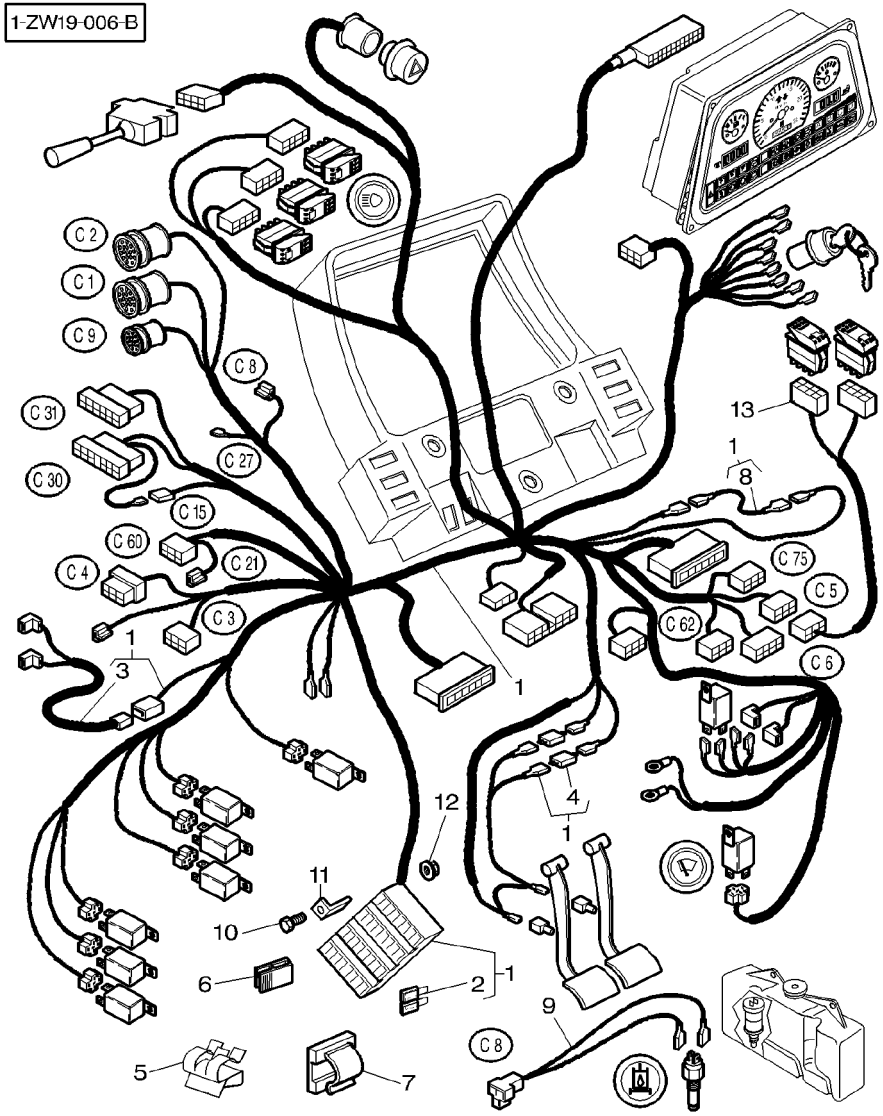

[A] WAY LIGHTS FITTED ON THE CAB ROOF
PHARES DE ROUTE MONTES SUR LE TOIT DE LA CABINE
FAHRSCHEINWERFER AM KABINENDACH MONTIERT
APROJETTORI DE STRADA MONTATO SOPRA IL TETTO DE LA CABINA
FARROS DE CATRETERA SOBRE EL TEJADO DE LA CABINA

[B] EXCEPT WAY LIGHTS FITTED ON THE CAB ROOF
EXCEPTE PHARES DE ROUTE MONTES SUR LE TOIT DE LA C ABINE
AUSNAHME FAHRSCHEINWERFER AM KABINENDACH MONTIERT
ECCEZIONE PROJETTORI DE STRADA MONTATO SOPRA IL T ETTO DE LA CABINA
EXCEPTION FARROS DE CATRETERA SOBRE EL TEJADO DE L A CABINA

[C] TRACTOR WITH PLATFORM
TRACTEUR AVEC PLATEFORME
SCHLEPPER MIT PLATTFORM
TRATTORE CON PIATTAFORMA
TRACTOR CON PLATAFORMA

Instrument Panel Harness
Faisceau De Tableau De Bord
Kabelnezt Instrumentenbrett
Fasciocavi Di Cruscoto
Haz De Hilos De Panel De Instrumentos

80-55

With Power Shuttle
Avec Inverseur Sous Couple
Mit Unter Drehmoment
Con Sotto Coppia
Con Inversor Sub Par

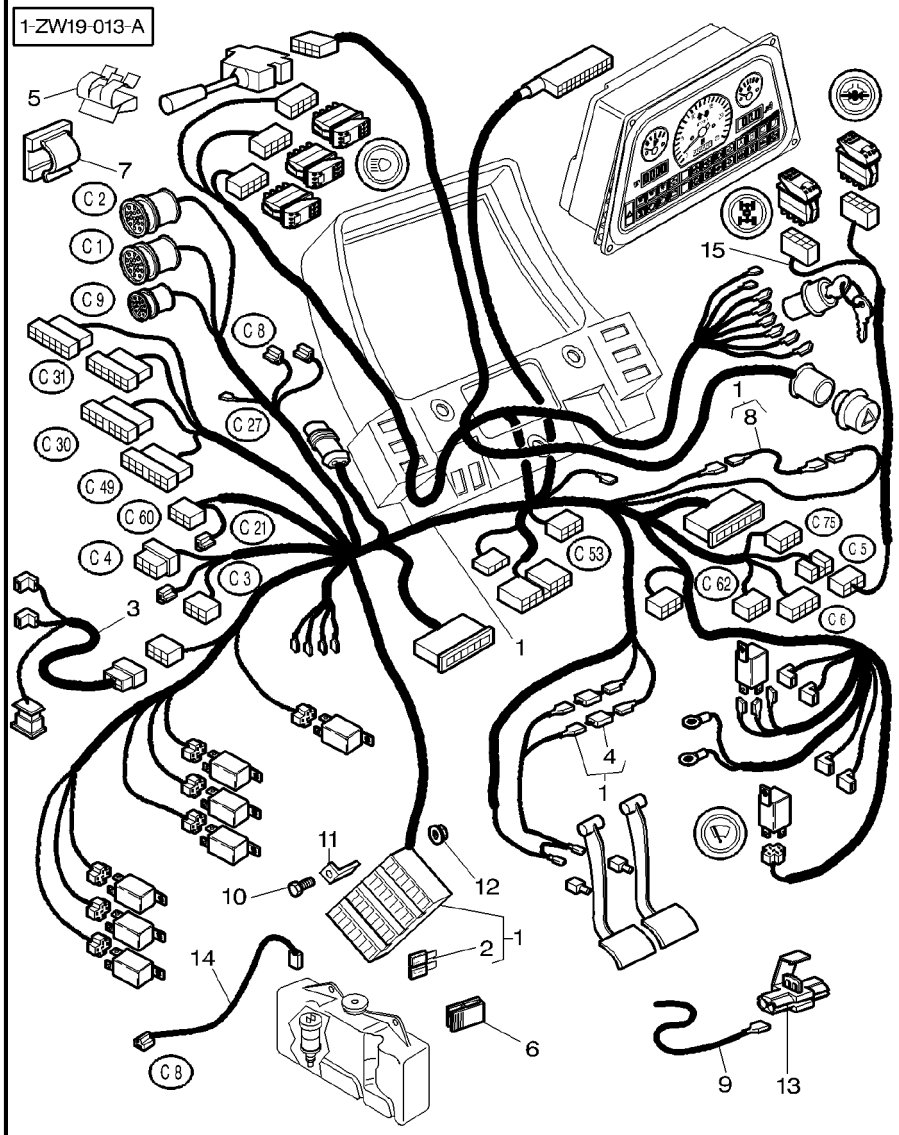

1	3779744M97			**1**	HARNESS	FAISCEAU FASCIOCAVI	KABELBAUM MAZO CABLES
2	***3580868M1***	1	3 AMP	**1**	FUSE	FUSIBLE FUSIBILE	SICHERUNG FUSIBLE
2	***3387319M1***	1	7,5 AMP	**X**	FUSE	FUSIBLE FUSIBILE	SICHERUNG FUSIBLE
2	***3620025M1***	1	10 AMP	**X**	FUSE	FUSIBLE FUSIBILE	SICHERUNG FUSIBLE
2	***3620026M1***	1	15 AMP	**X**	FUSE	FUSIBLE FUSIBILE	SICHERUNG FUSIBLE
2	***3387322M1***	1	25 AMP	**X**	FUSE	FUSIBLE FUSIBILE	SICHERUNG FUSIBLE
2	***3712661M1***	1	30 AMP	**X**	FUSE	FUSIBLE FUSIBILE	SICHERUNG FUSIBLE
3	3783857M1			**1**	HARNESS	FAISCEAU FASCIOCAVI	KABELBAUM MAZO CABLES
4	***3777531M1***	1	2X6AMP	**2**	DIODE	DIODE DIODO	DIODE DIODO
5	3618680M1			**1**	FASTENER	AGRAFE LACCIO	HALTEKLAMMER CIERRE
6	3389401M1			**1**	FASTENER	AGRAFE LACCIO	HALTEKLAMMER CIERRE
7	3760697M1			**X**	CLIP	CLIP FERMAGLIO	SCHELLE CRAPA RETEN
8	3781003M1	1	[B]	**1**	WIRE	FIL FILO DI FERRO	DRAHT HILO
9	3715702M2			**1**	WIRE	FIL FILO DI FERRO	DRAHT HILO
10	339160X1		M5X10	**4**	SCREW	VIS VITE	SCHRAUBE TORNILLO
11	3782186M1			**4**	SUPPORT	SUPPORT SUPPORTO	LAGERUNG DISPOS.DE SOSTEN
12	3010477X1			**4**	NUT METRIC	ECROU METRIQUE DADO METRICO	MUTTER METRISCH TUERCA METRICO
13	3042464M1			**1**	UNION	RACCORD RACCORDO	VERSCHRAUBUNG RACOR
14	3777527M1			**1**	WIRE	FIL FILO DI FERRO	DRAHT HILO
15	3782986M1		[C]	**1**	HARNESS	FAISCEAU FASCIOCAVI	KABELBAUM MAZO CABLES

[B] EXCEPT WAY LIGHTS FITTED ON THE CAB ROOF
EXCEPTE PHARES DE ROUTE MONTES SUR LE TOIT DE LA C ABINE
AUSNAHME FAHRSCHEINWERFER AM KABINENDACH MONTIERT
ECCEZIONE PROJETTORI DE STRADA MONTATO SOPRA IL T ETTO DE LA CABINA
EXCEPTION FARROS DE CATRETERA SOBRE EL TEJADO DE L A CABINA

[C] TRACTOR WITH PLATFORM
TRACTEUR AVEC PLATEFORME
SCHLEPPER MIT PLATTFORM
TRATTORE CON PIATTAFORMA
TRACTOR CON PLATAFORMA

Instrument Panel Harness
Faisceau De Tableau De Bord
Kabelnezt Instrumentenbrett
Fasciocavi Di Cruscoto
Haz De Hilos De Panel De Instrumentos

80-60

United States − With Dynashift
Etats Unis − Avec Dynashift
Vereinigten Staaten − Mit Dynashift
Stati Uniti − Con Dynashift
Estados Unidos − Con Dynashift

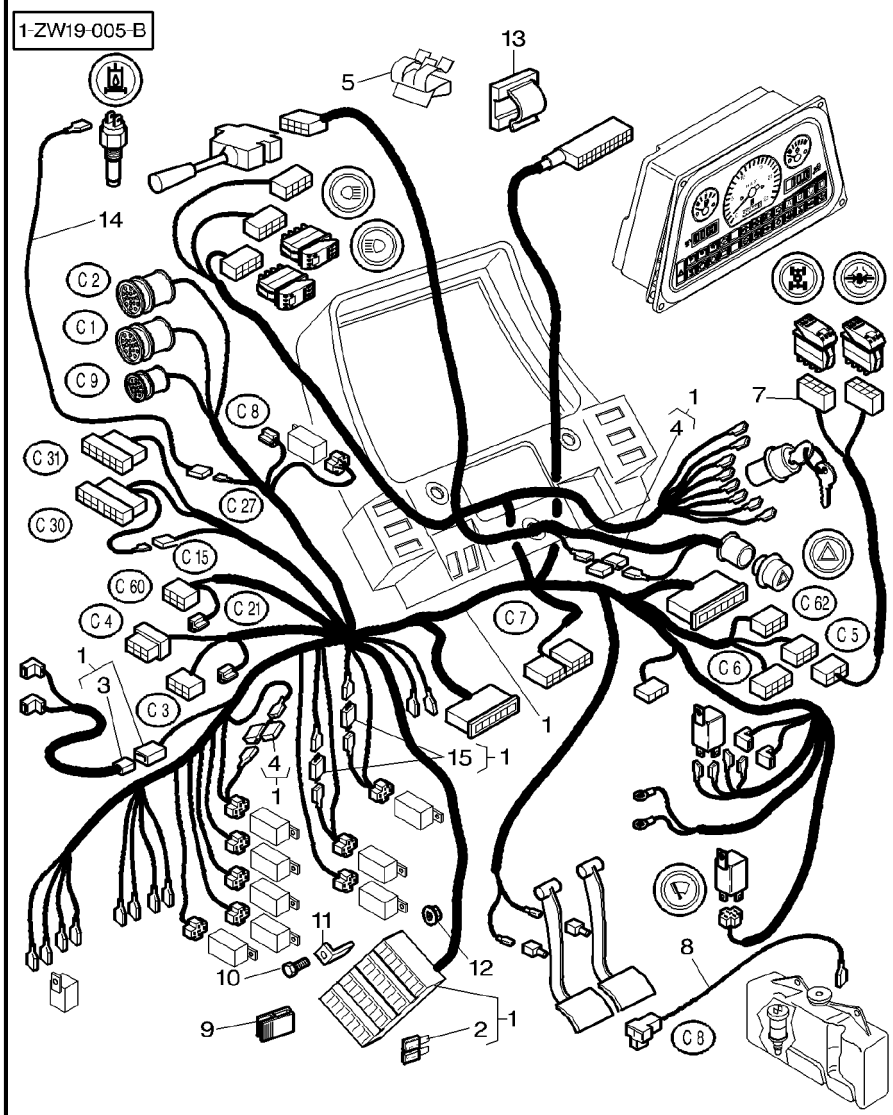

1	3780445M95	⇒ 3778522M92		**1**	HARNESS	FAISCEAU FASCIOCAVI	KABELBAUM MAZO CABLES
2	***3580868M1***	1 3 AMP		**2**	FUSE	FUSIBLE FUSIBILE	SICHERUNG FUSIBLE
2	***3387318M1***	1 5 AMP		**1**	FUSE	FUSIBLE FUSIBILE	SICHERUNG FUSIBLE
2	***3387319M1***	1 7,5 AMP		**4**	FUSE	FUSIBLE FUSIBILE	SICHERUNG FUSIBLE
2	***3620025M1***	1 10 AMP		**4**	FUSE	FUSIBLE FUSIBILE	SICHERUNG FUSIBLE
2	***3620026M1***	1 15 AMP		**15**	FUSE	FUSIBLE FUSIBILE	SICHERUNG FUSIBLE
2	***3780003M1***	1 20 AMP		**1**	FUSE	FUSIBLE FUSIBILE	SICHERUNG FUSIBLE
2	***3387322M1***	1 25 AMP		**4**	FUSE	FUSIBLE FUSIBILE	SICHERUNG FUSIBLE
2	***3712661M1***	1 30 AMP		**4**	FUSE	FUSIBLE FUSIBILE	SICHERUNG FUSIBLE
3	3713090M1	1		**1**	HARNESS	FAISCEAU FASCIOCAVI	KABELBAUM MAZO CABLES
4	***3777531M1***	1 2X6AMP		**2**	DIODE	DIODE DIODO	DIODE DIODO
5	3618680M1			**1**	FASTENER	AGRAFE LACCIO	HALTEKLAMMER CIERRE
6	3782986M1	[A]		**1**	HARNESS	FAISCEAU FASCIOCAVI	KABELBAUM MAZO CABLES
7	3782986M1	[A]		**1**	HARNESS	FAISCEAU FASCIOCAVI	KABELBAUM MAZO CABLES
8	3777527M1			**1**	WIRE	FIL FILO DI FERRO	DRAHT HILO
9	3389401M1			**1**	FASTENER	AGRAFE LACCIO	HALTEKLAMMER CIERRE
10	339160X1	M5X10		**4**	SCREW	VIS VITE	SCHRAUBE TORNILLO
11	3782186M1			**4**	SUPPORT	SUPPORT SUPPORTO	LAGERUNG DISPOS.DE SOSTEN
11	3387325M1	[A]		**4**	SUPPORT	SUPPORT SUPPORTO	LAGERUNG DISPOS.DE SOSTEN
12	3010477X1			**4**	NUT METRIC	ECROU METRIQUE DADO METRICO	MUTTER METRISCH TUERCA METRICO
13	3760697M1			**X**	CLIP	CLIP FERMAGLIO	SCHELLE CRAPA RETEN
14	3778737M1			**1**	HARNESS	FAISCEAU FASCIOCAVI	KABELBAUM MAZO CABLES
15	3779377M1	1 6AMP		**1**	DIODE	DIODE DIODO	DIODE DIODO

[A] TRACTOR WITH PLATFORM
TRACTEUR AVEC PLATEFORME
SCHLEPPER MIT PLATTFORM
TRATTORE CON PIATTAFORMA
TRACTOR CON PLATAFORMA

Instrument Panel Harness
Faisceau De Tableau De Bord
Kabelnezt Instrumentenbrett
Fasciocavi Di Cruscoto
Haz De Hilos De Panel De Instrumentos

80-65

With Full Powershift
Avec Full Powershift
Mit Full Powershift
Con Full Powershift
Con Full Powershift

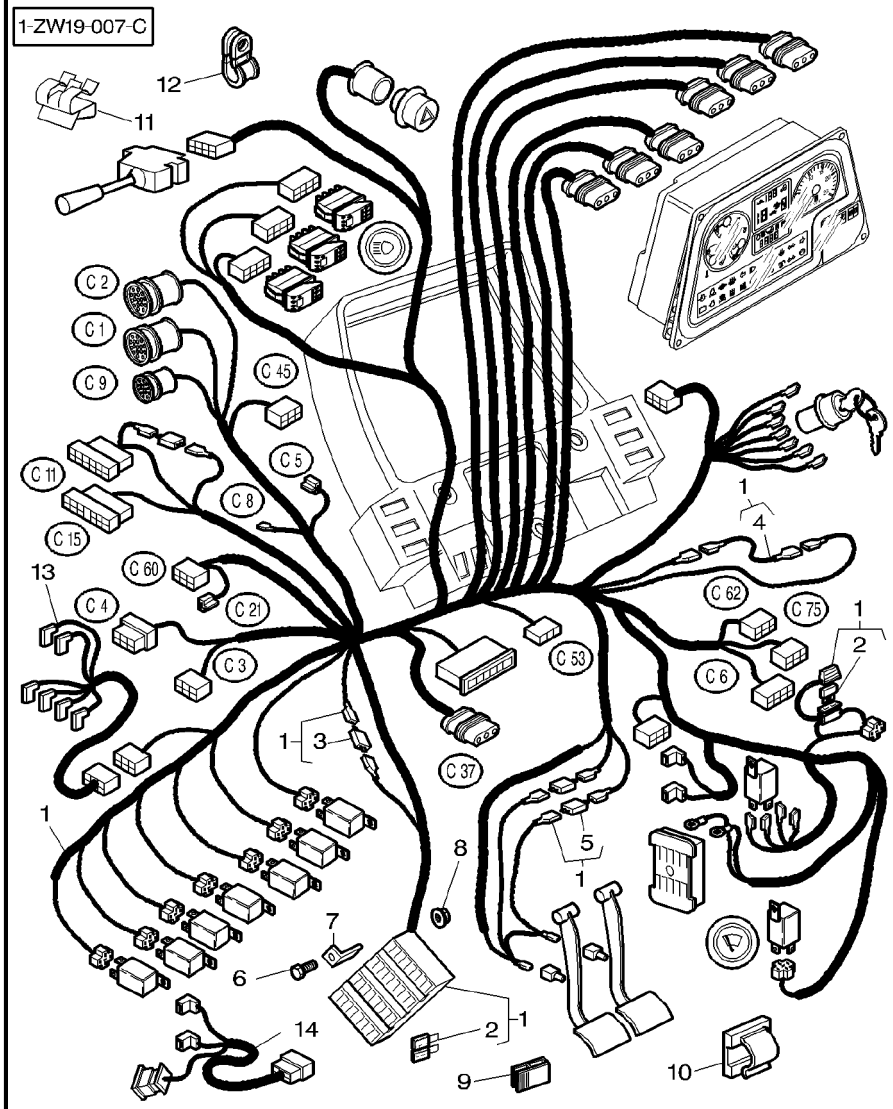

1	3780154M96	US S		1	HARNESS	FAISCEAU FASCIOCAVI	KABELBAUM MAZO CABLES
1	3780156M96	S	30-JUN-2000	1	HARNESS	FAISCEAU FASCIOCAVI	KABELBAUM MAZO CABLES
1	3780154M96	S	01-JUL-2000	1	HARNESS	FAISCEAU FASCIOCAVI	KABELBAUM MAZO CABLES
1	3780159M96	[A] US S	30-JUN-2000	1	HARNESS	FAISCEAU FASCIOCAVI	KABELBAUM MAZO CABLES
1	3780154M96	[A] US S	01-JUL-2000	1	HARNESS	FAISCEAU FASCIOCAVI	KABELBAUM MAZO CABLES
2	***3580868M1***	1 3 AMP.		**2**	FUSE	FUSIBLE FUSIBILE	SICHERUNG FUSIBLE
2	***3387319M1***	1 7.5 AMP.		**3**	FUSE	FUSIBLE FUSIBILE	SICHERUNG FUSIBLE
2	***1695939M1***	1 10 AMP.		**3**	FUSE	FUSIBLE FUSIBILE	SICHERUNG FUSIBLE
2	***1695966M1***	1 15 AMP.		**6**	FUSE	FUSIBLE FUSIBILE	SICHERUNG FUSIBLE
2	***3387322M1***	1 25 AMP.		**3**	FUSE	FUSIBLE FUSIBILE	SICHERUNG FUSIBLE
2	***3712661M1***	1 30 AMP.		**6**	FUSE	FUSIBLE FUSIBILE	SICHERUNG FUSIBLE
3	3783014M1	1		**1**	DIODE	DIODE DIODO	DIODE DIODO
4	3781003M1	1 [B]		**1**	WIRE	FIL FILO DI FERRO	DRAHT HILO
5	***3777531M1***	1		**2**	DIODE	DIODE DIODO	DIODE DIODO
6	339160X1	M5X10		**4**	SCREW	VIS VITE	SCHRAUBE TORNILLO
7	3387325M1			**4**	SUPPORT	SUPPORT SUPPORTO	LAGERUNG DISPOS.DE SOSTEN
8	3010477X1	M5		**4**	NUT METRIC	ECROU METRIQUE DADO METRICO	MUTTER METRISCH TUERCA METRICO
9	3389401M1			**1**	FASTENER	AGRAFE LACCIO	HALTEKLAMMER CIERRE
10	3760697M1			**X**	CLIP	CLIP FERMAGLIO	SCHELLE CRAPA RETEN
11	3618680M1			**1**	FASTENER	AGRAFE LACCIO	HALTEKLAMMER CIERRE
12	3581424M1			**2**	CLAMP	COLLIER FASCETTA	HALTESCHELLE ABRAZADERA
13	3780415M1		J032030	**1**	HARNESS	FAISCEAU FASCIOCAVI	KABELBAUM MAZO CABLES
14	3783857M1		J032031	**1**	HARNESS	FAISCEAU FASCIOCAVI	KABELBAUM MAZO CABLES

Instrument Panel Harness Faisceau De Tableau De Bord Kabelnezt Instrumentenbrett Fasciocavi Di Cruscoto Haz De Hilos De Panel De Instrumentos	80-65	With Full Powershift Avec Full Powershift Mit Full Powershift Con Full Powershift Con Full Powershift

1-ZW19-007-C

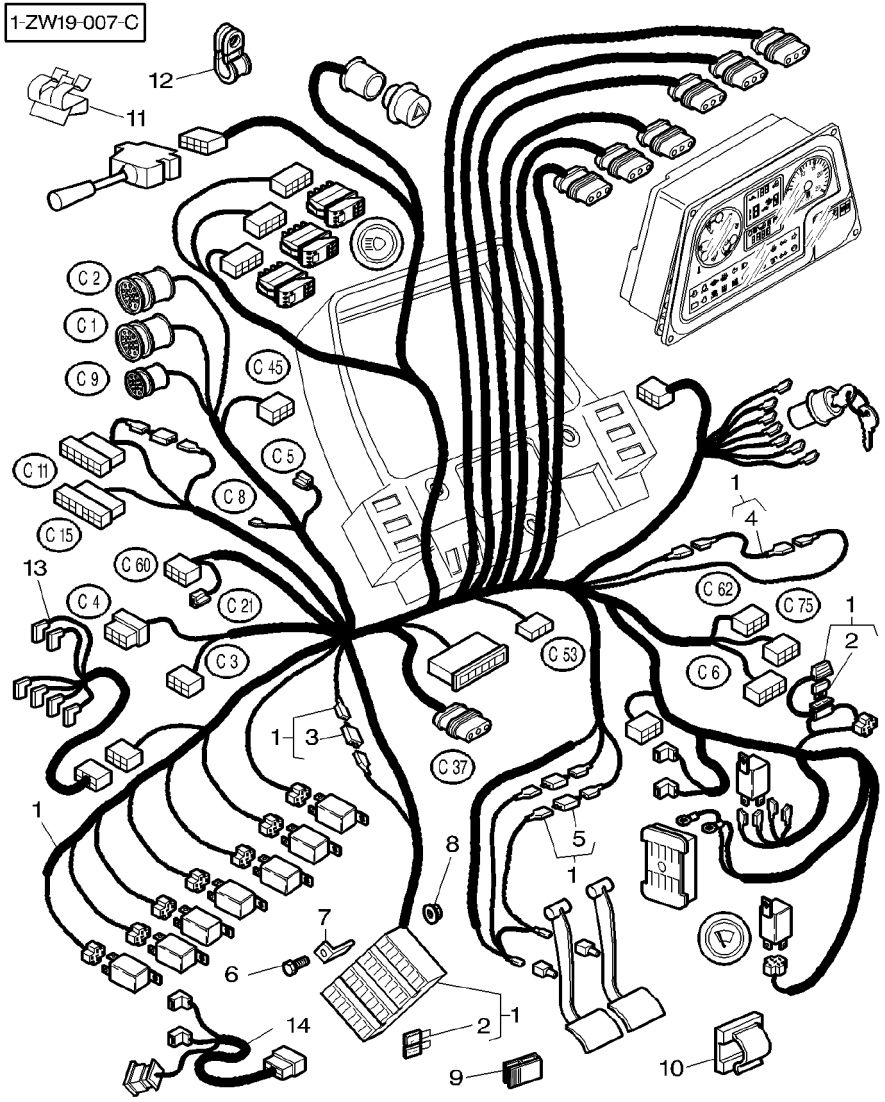

[A] WAY LIGHTS FITTED ON THE CAB ROOF
PHARES DE ROUTE MONTES SUR LE TOIT DE LA CABINE
FAHRSCHEINWERFER AM KABINENDACH MONTIERT
APROJETTORI DE STRADA MONTATO SOPRA IL TETTO DE LA CABINA
FARROS DE CATRETERA SOBRE EL TEJADO DE LA CABINA

[B] EXCEPT WAY LIGHTS FITTED ON THE CAB ROOF
EXCEPTE PHARES DE ROUTE MONTES SUR LE TOIT DE LA C ABINE
AUSNAHME FAHRSCHEINWERFER AM KABINENDACH MONTIERT
ECCEZIONE PROJETTORI DE STRADA MONTATO SOPRA IL T ETTO DE LA CABINA
EXCEPTION FARROS DE CATRETERA SOBRE EL TEJADO DE L A CABINA

Instrument Panel Harness
Faisceau De Tableau De Bord
Kabelnezt Instrumentenbrett
Fasciocavi Di Cruscoto
Haz De Hilos De Panel De Instrumentos

80-70

United States − With Full Powershift
Etats Unis − Avec Full Powershift
Vereinigten Staaten − Mit Full Powershift
Stati Uniti − Con Full Powershift
Estados Unidos − Con Full Powershift

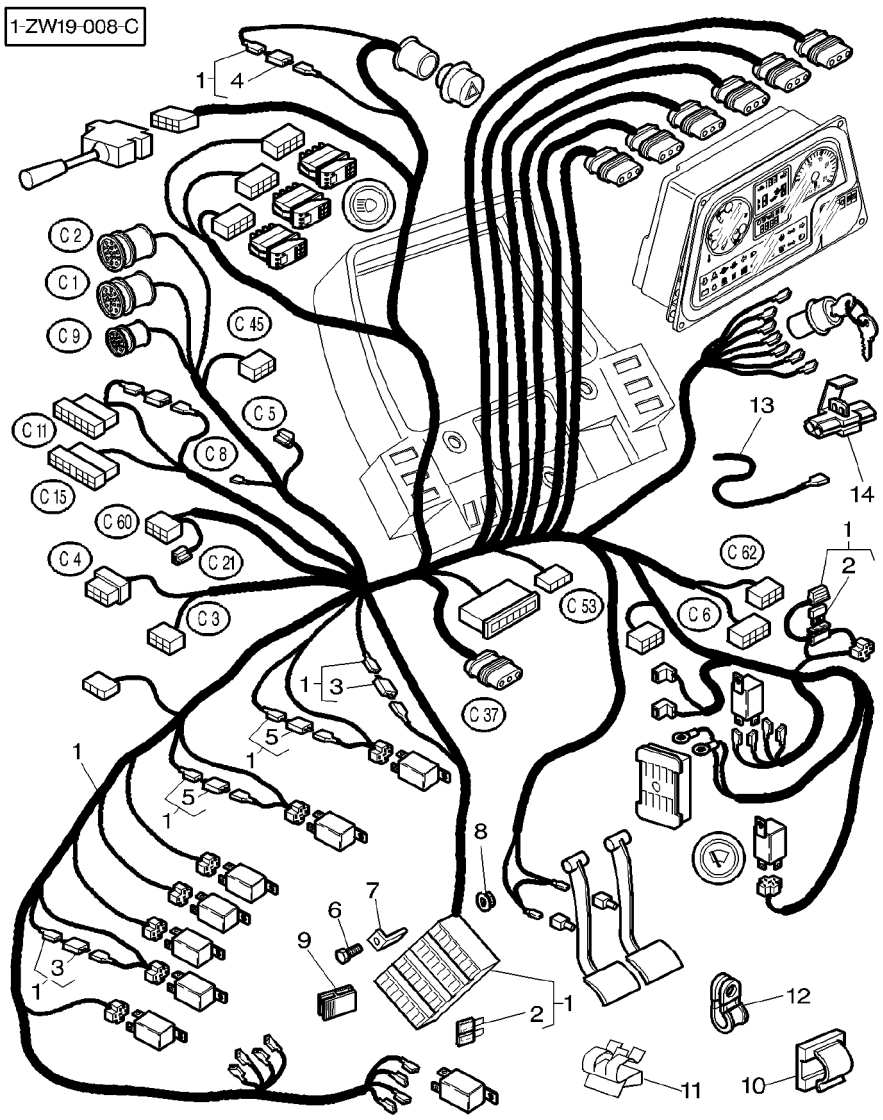

1	3780161M96			**1**	HARNESS	FAISCEAU FASCIOCAVI	KABELBAUM MAZO CABLES
2	***3580868M1***	1	3 AMP.	**3**	FUSE	FUSIBLE FUSIBILE	SICHERUNG FUSIBLE
2	***3387319M1***	1	7.5 AMP.	**3**	FUSE	FUSIBLE FUSIBILE	SICHERUNG FUSIBLE
2	***1695939M1***	1	10 AMP.	**3**	FUSE	FUSIBLE FUSIBILE	SICHERUNG FUSIBLE
2	***1695966M1***	1	15 AMP.	**7**	FUSE	FUSIBLE FUSIBILE	SICHERUNG FUSIBLE
2	***3387322M1***	1	25 AMP.	**3**	FUSE	FUSIBLE FUSIBILE	SICHERUNG FUSIBLE
2	***3712661M1***	1	30 AMP.	**4**	FUSE	FUSIBLE FUSIBILE	SICHERUNG FUSIBLE
2	***3780003M1***	1	20 AMP.	**1**	FUSE	FUSIBLE FUSIBILE	SICHERUNG FUSIBLE
3	3783014M1	1		**1**	DIODE	DIODE DIODO	DIODE DIODO
4	***3777531M1***	1		**2**	DIODE	DIODE DIODO	DIODE DIODO
5	3779377M1	1		**2**	DIODE	DIODE DIODO	DIODE DIODO
6	339160X1	M5X10		**4**	SCREW	VIS VITE	SCHRAUBE TORNILLO
7	3387325M1			**4**	SUPPORT	SUPPORT SUPPORTO	LAGERUNG DISPOS.DE SOSTEN
8	3010477X1	M5		**4**	NUT METRIC	ECROU METRIQUE DADO METRICO	MUTTER METRISCH TUERCA METRICO
9	3389401M1			**1**	FASTENER	AGRAFE LACCIO	HALTEKLAMMER CIERRE
10	3760697M1			**X**	CLIP	CLIP FERMAGLIO	SCHELLE CRAPA RETEN
11	3618680M1			**1**	FASTENER	AGRAFE LACCIO	HALTEKLAMMER CIERRE
12	3581424M1			**2**	CLAMP	COLLIER FASCETTA	HALTESCHELLE ABRAZADERA
13	3715702M2	➡		**1**	WIRE	FIL FILO DI FERRO	DRAHT HILO
14	3042464M1			**1**	UNION	RACCORD RACCORDO	VERSCHRAUBUNG RACOR

Instrument Panel Harness/ Armrest
Faisceau Tableau De Bord / Accoudoir
Instrumentenbrettkabelnezt / Armlehne
Fasciocavi De Pannello Strumen / Bracciolo
Haz De Hilos Panel Instrument / Reposa Brazos

80-75

1-ZW18-001-A

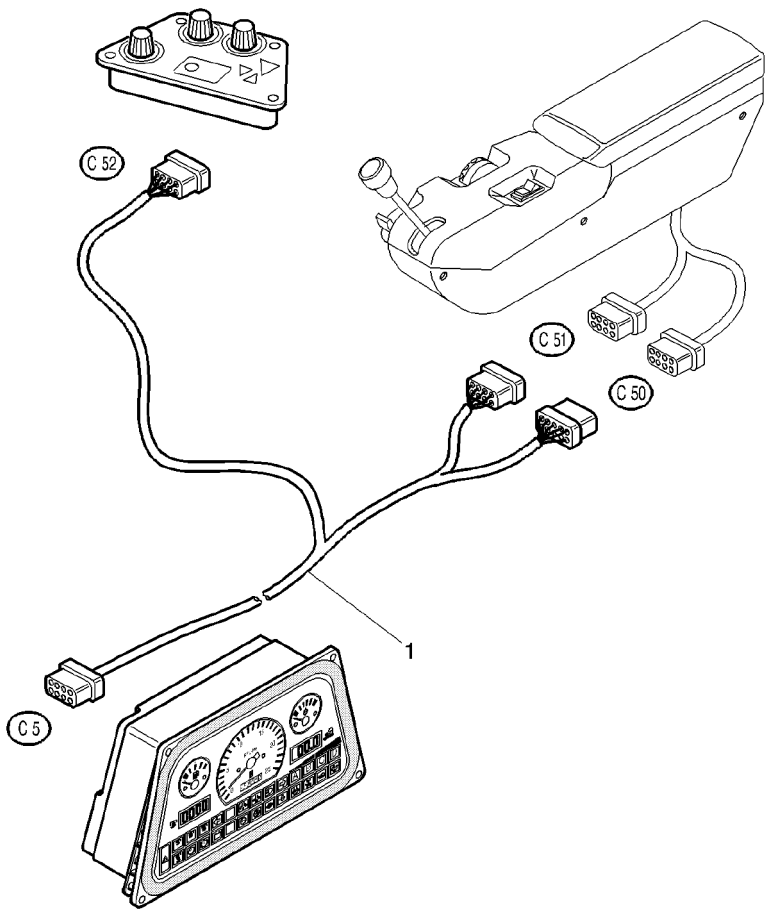

1	3778514M1	**1**	HARNESS	FAISCEAU FASCIOCAVI	KABELBAUM MAZO CABLES

Full Powershift Control Harness **Faisceau De Commande Full Powershift** **Kabelnezt Antrieb Full Powershift** **Fasciocavi Di Comandi Full Powershift** **Haz De Hilos De Sobre Full Powershift**	**Armrest** **Accoudoir** **Armlehnen** **Braccioli** **Descansabrazo**	**80-80**

1-ZW24-001-A

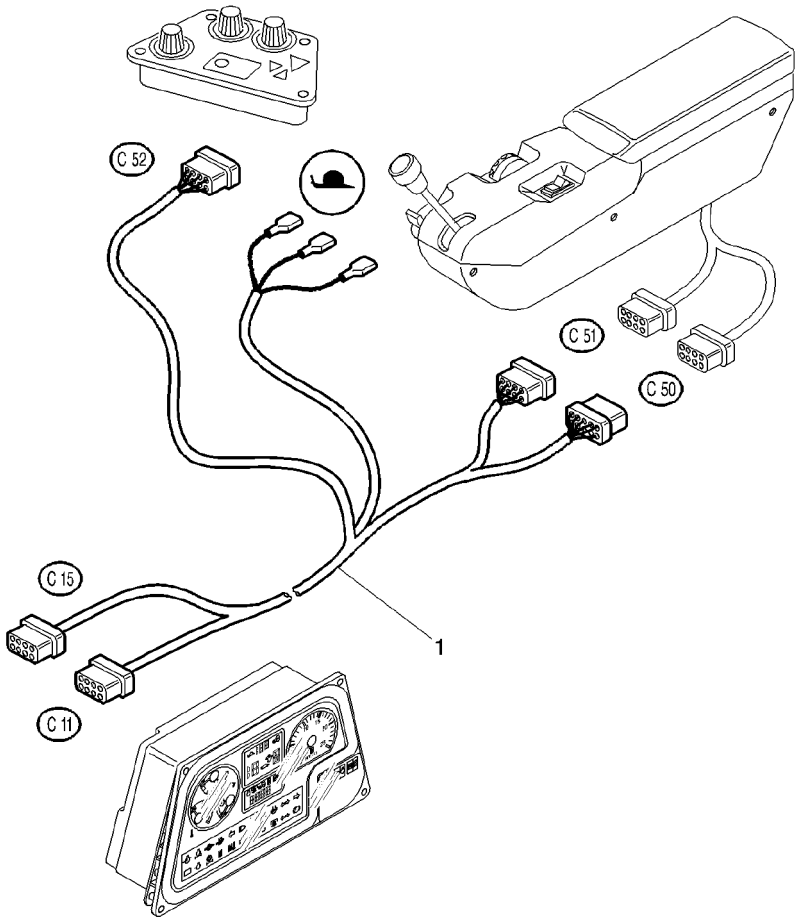

1	3777521M1	HARNESS	FAISCEAU FASCIOCAVI	KABELBAUM MAZO CABLES

Harness Console
Faisceau Console
Kabelnezt Konsole
Fasciocavi Di Consola
Haz De Hilos De Consolle

80-85

With Dynashift
Avec Dynashift
Mit Dynashift
Con Dynashift
Con Dynashift

1-ZW23-003-B

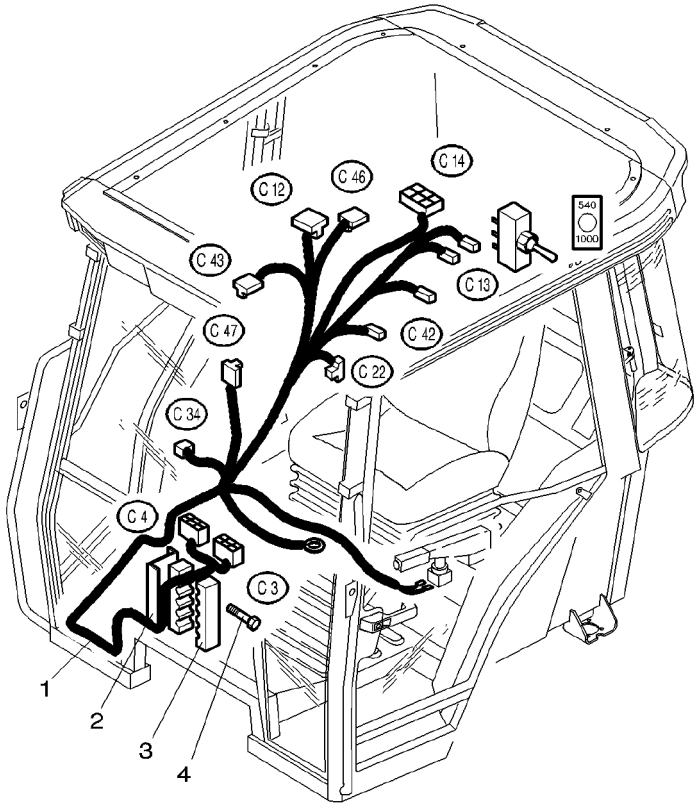

1	3782541M3		**1**	HARNESS	FAISCEAU FASCIOCAVI	KABELBAUM MAZO CABLES
2	3583308M92		**1**	BRIDLE	BRIDE BRIGLIA	SPANNBAND BRIDA
3	3713556M3		**2**	BRIDLE	BRIDE BRIGLIA	SPANNBAND BRIDA
4	391074X1	M6X12	**1**	SCREW METRIC	VIS METRIQUE VITE METRICA	SCHRAUBE METR TORNILLO METRICO
4	391884X1	M6X50	**1**	BOLT METRIC	BOULON METRIQUE BULLONE METRICO	MASCH.SCHRB MET PERNO METRICO

Harness Console
Faisceau Console
Kabelnezt Konsole
Fasciocavi Di Consola
Haz De Hilos De Consolle

80-90

With High Visibility Roof − Dynashift − Way Lights Fitted On The Cab Roof
Avec Toit Haute Visibilite − Dynashift −Phares De Route Montes Sur Le Toit De La Cabine
Mit Dach Mit Sonnendach − Dynashift − Fernlicht Montiert Auf Dem Kabinendach
Con Tetto Alta Visibilita − Dynashift − Luce A Grande Profondita Sopra Il Tetto De La Cabina
Con Tejado Alta Visibilidad − Dynashift − Luz De Carretera Sobre El Tejado De La Cabina

1-ZW23-001-A

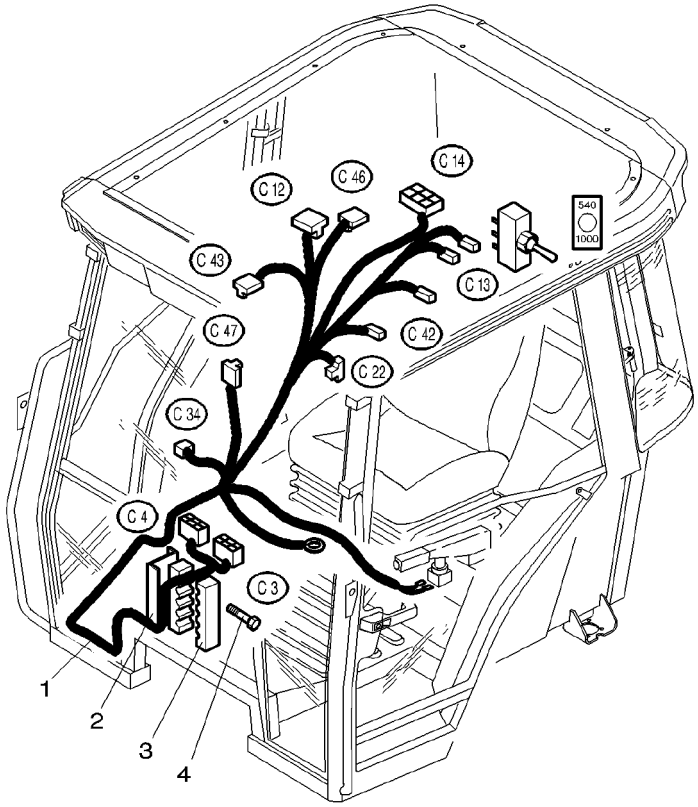

1	3778515M1		**1**	HARNESS	FAISCEAU FASCIOCAVI	KABELBAUM MAZO CABLES
2	3583308M92		**1**	BRIDLE	BRIDE BRIGLIA	SPANNBAND BRIDA
3	3713556M3		**2**	BRIDLE	BRIDE BRIGLIA	SPANNBAND BRIDA
4	391074X1	M6X12	**1**	SCREW METRIC	VIS METRIQUE VITE METRICA	SCHRAUBE METR TORNILLO METRICO
4	391884X1	M6X50	**1**	BOLT METRIC	BOULON METRIQUE BULLONE METRICO	MASCH.SCHRB MET PERNO METRICO

Harness Console
Faisceau Console
Kabelnezt Konsole
Fasciocavi Di Consola
Haz De Hilos De Consolle

80-95

With Full Powershift
Avec Full Powershift
Mit Full Powershift
Con Full Powershift
Con Full Powershift

1-ZW23-004-A

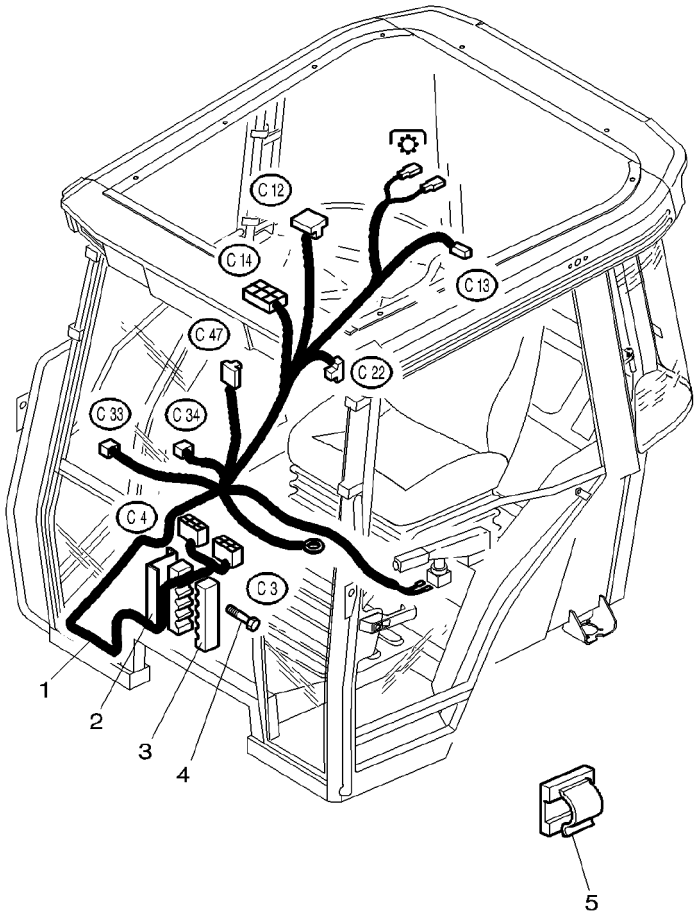

1	3777520M1		**1**	HARNESS	FAISCEAU FASCIOCAVI	KABELBAUM MAZO CABLES
2	3583308M92		**1**	BRIDLE	BRIDE BRIGLIA	SPANNBAND BRIDA
3	3713556M3		**2**	BRIDLE	BRIDE BRIGLIA	SPANNBAND BRIDA
4	391074X1	M6X12	**1**	SCREW METRIC	VIS METRIQUE VITE METRICA	SCHRAUBE METR TORNILLO METRICO
4	391884X1	M6X50	**1**	BOLT METRIC	BOULON METRIQUE BULLONE METRICO	MASCH.SCHRB MET PERNO METRICO
5	3760697M1		**X**	CLIP	CLIP FERMAGLIO	SCHELLE CRAPA RETEN

Harness Console	**Platform**	**80-100**
Faisceau Console	**Plateforme**	
Kabelnezt Konsole	**Plattform**	
Fasciocavi Di Consola	**Piattaforma**	
Haz De Hilos De Consolle	**Plataforma**	

1-ZW30-001-A

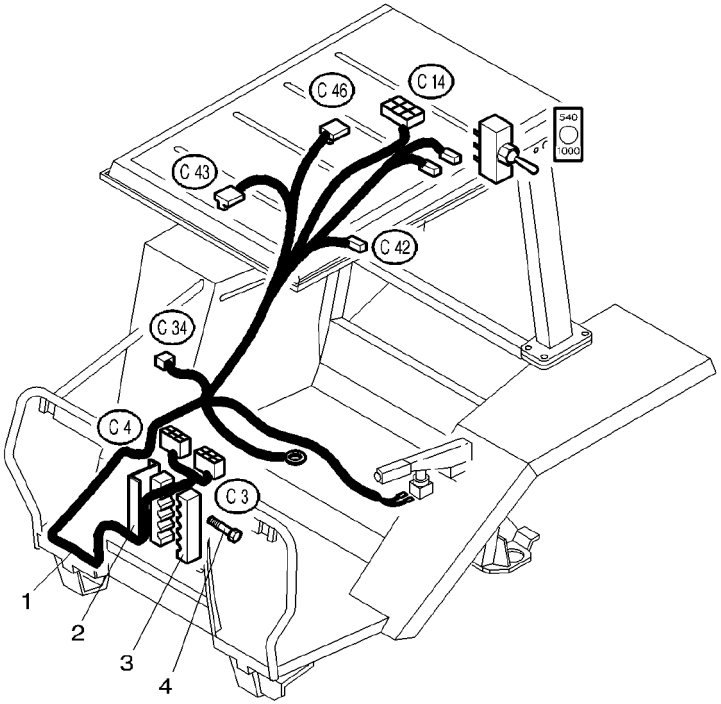

1	3778806M1		**1**	HARNESS	FAISCEAU FASCIOCAVI MAZO CABLES KABELBAUM
2	3583308M92		**1**	BRIDLE	BRIDE BRIGLIA BRIDA SPANNBAND
3	3713556M3		**2**	BRIDLE	BRIDE BRIGLIA BRIDA SPANNBAND
4	391074X1	M6X12	**1**	SCREW METRIC	VIS METRIQUE VITE METRICA TORNILLO METRICO SCHRAUBE METR
4	391884X1	M6X50	**1**	BOLT METRIC	BOULON METRIQUE BULLONE METRICO PERNO METRICO MASCH.SCHRB MET

Roof Harness
Faisceau Plafond
Kabelnezt Dach
Fasciocavi Di Tetto
Haz De Hilos De Techo

80-105

1-ZW22-002-A

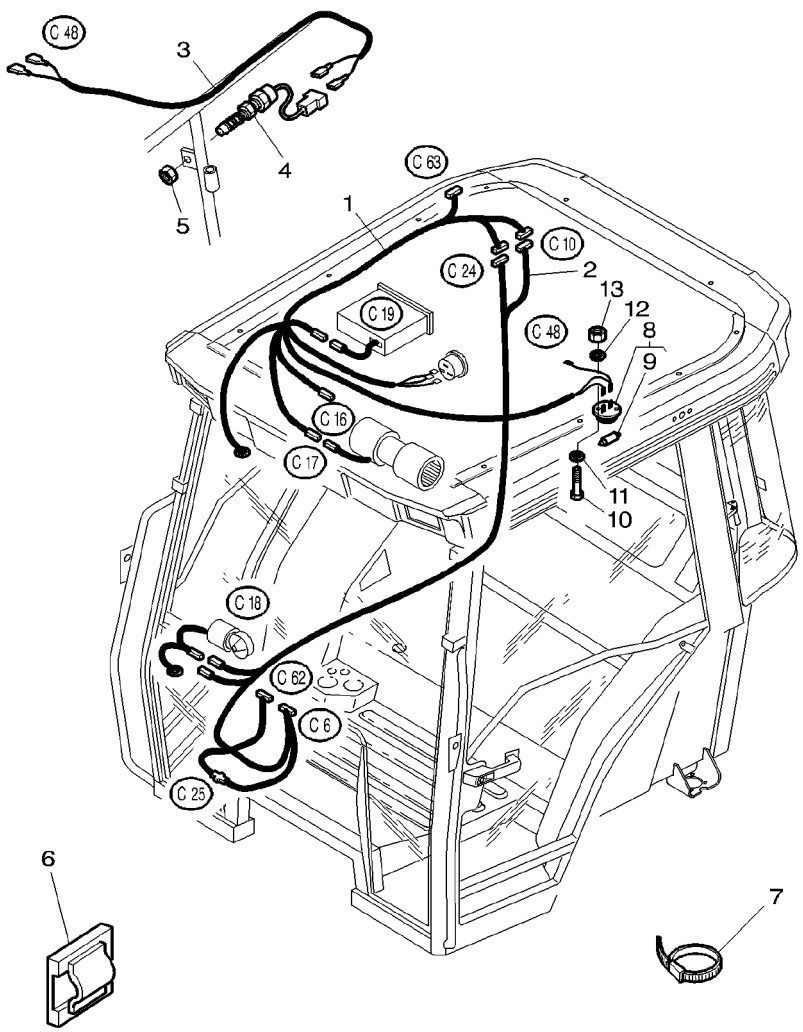

1	3780373M1		**1**	HARNESS	FAISCEAU FASCIOCAVI	KABELBAUM MAZO CABLES
2	3780372M2		**1**	HARNESS	FAISCEAU FASCIOCAVI	KABELBAUM MAZO CABLES
3	3714845M1		**1**	HARNESS	FAISCEAU FASCIOCAVI	KABELBAUM MAZO CABLES
4	***3780395M2***		**1**	SWITCH,INDIRECT	CONTACTEUR INTERRUTTORE IND	KONTAKTSCHALTER CONTACTOR
5	390333X1	M10	**1**	NUT METRIC	ECROU METRIQUE DADO METRICO	MUTTER METRISCH TUERCA METRICO
6	3760697M1		**X**	CLIP	CLIP FERMAGLIO	SCHELLE CRAPA RETEN
7	3619622M1		**X**	CABLE TIE	ATTACHE CABLE FASCETTA CAVI	KABELBINDER ENLACE DE CABLE
8	3713129M1		**1**	ROOF LIGHT	PLAFONNIER PLAFONIERA	DECKENLEUCHTE LUZ INTERIOR
9	***3385821M1***	8	**2**	BULB 12V 10W	AMPOULE 12V 10W BULBO 12V 10W	GLUEHL 12V 10W BOMBILLA 12V 10W
10	3001162X1	M4X16	**2**	SCREW	VIS VITE	SCHRAUBE TORNILLO
11	339102X1	∅ 9MM	**2**	WASHER METRIC	RONDELLE METR. RONDELLA METRICO	SCHEIBE METRISCH ARANDELA METRICO
12	3001856X1	∅ 4-12MM	**2**	WASHER METRIC	RONDELLE METR. RONDELLA METRICO	SCHEIBE METRISCH ARANDELA METRICO
13	3019139X1	M4	**2**	NUT	ECROU DADO	MUTTER TUERCA

Roof Harness
Faisceau Plafond
Kabelnezt Dach
Fasciocavi Di Tetto
Haz De Hilos De Techo

80-110

United States Only
Etats Unis Seulement
Vereinigten Staaten
Solo Per Stati Uniti
Estados Unidos Solamente

1-ZW22-004-A

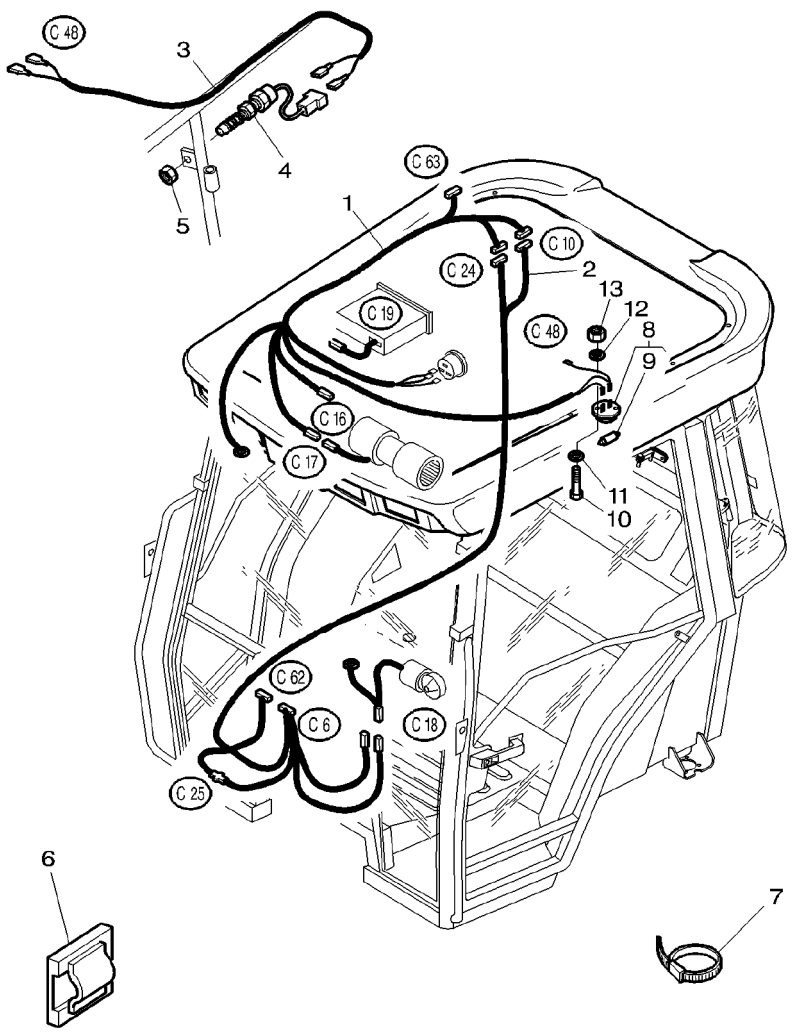

1	3780457M1		**1**	HARNESS	FAISCEAU FASCIOCAVI	KABELBAUM MAZO CABLES
2	3780456M2		**1**	HARNESS	FAISCEAU FASCIOCAVI	KABELBAUM MAZO CABLES
3	3714845M1		**1**	HARNESS	FAISCEAU FASCIOCAVI	KABELBAUM MAZO CABLES
4	***3780395M2***		**1**	SWITCH,INDIRECT	CONTACTEUR INTERRUTTORE IND	KONTAKTSCHALTER CONTACTOR
5	390333X1	M10	**1**	NUT METRIC	ECROU METRIQUE DADO METRICO	MUTTER METRISCH TUERCA METRICO
6	3760697M1		**X**	CLIP	CLIP FERMAGLIO	SCHELLE CRAPA RETEN
7	3619622M1		**X**	CABLE TIE	ATTACHE CABLE FASCETTA CAVI	KABELBINDER ENLACE DE CABLE
8	3713129M1		**1**	ROOF LIGHT	PLAFONNIER PLAFONIERA	DECKENLEUCHTE LUZ INTERIOR
9	***3385821M1***	8	**2**	BULB 12V 10W	AMPOULE 12V 10W BULBO 12V 10W	GLUEHL 12V 10W BOMBILLA 12V 10W
10	3001162X1	M4X16	**2**	SCREW	VIS VITE	SCHRAUBE TORNILLO
11	339102X1	∅ 9MM	**2**	WASHER METRIC	RONDELLE METR. RONDELLA METRICO	SCHEIBE METRISCH ARANDELA METRICO
12	3001856X1	∅ 12MM	**2**	WASHER METRIC	RONDELLE METR. RONDELLA METRICO	SCHEIBE METRISCH ARANDELA METRICO
13	3019139X1	M4	**2**	NUT	ECROU DADO	MUTTER TUERCA

Roof Harness
Faisceau Plafond
Kabelnezt Dach
Fasciocavi Di Tetto
Haz De Hilos De Techo

80-115

With High Visibility Roof
Avec Toit Haute Visibilite
Mit Dach Mit Sonnendach
Con Tetto Alta Visibilita
Con Tejado Alta Visibilidad

1-ZW22-001-A

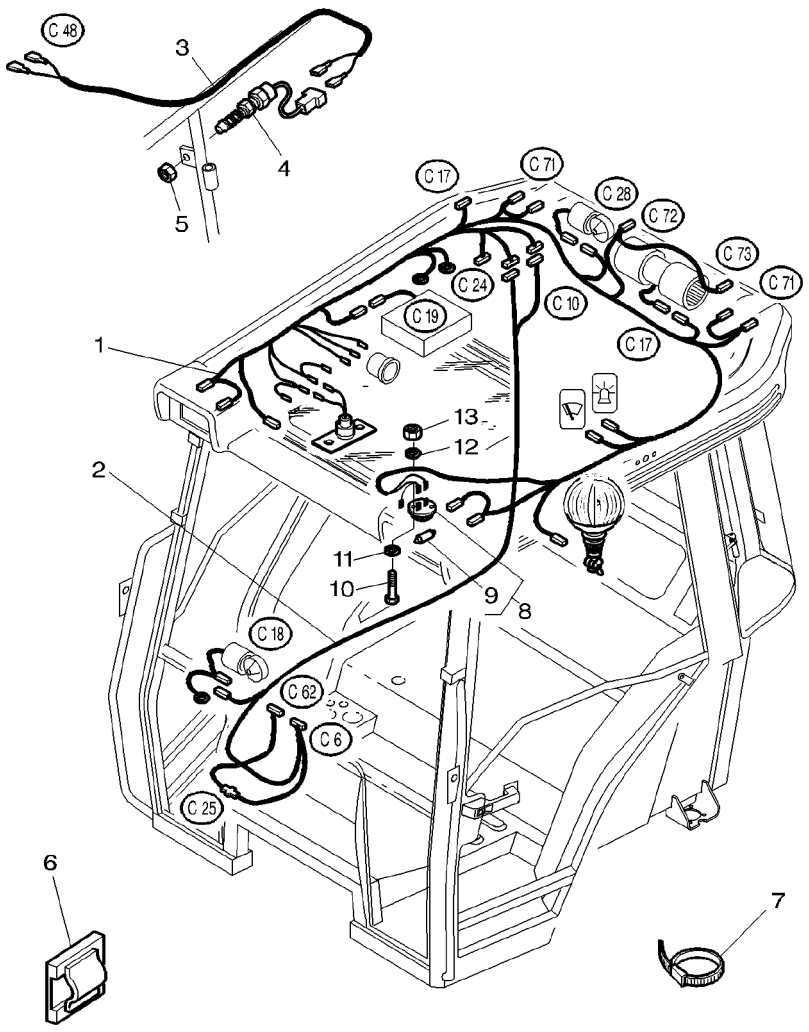

1	3779762M1		**1**	HARNESS	FAISCEAU FASCIOCAVI	KABELBAUM MAZO CABLES
2	3777696M3		**1**	HARNESS	FAISCEAU FASCIOCAVI	KABELBAUM MAZO CABLES
3	3714845M1		**1**	HARNESS	FAISCEAU FASCIOCAVI	KABELBAUM MAZO CABLES
4	***3780395M2***		**1**	SWITCH,INDIRECT	CONTACTEUR INTERRUTTORE IND	KONTAKTSCHALTER CONTACTOR
5	390333X1	M10	**1**	NUT METRIC	ECROU METRIQUE DADO METRICO	MUTTER METRISCH TUERCA METRICO
6	3760697M1		**X**	CLIP	CLIP FERMAGLIO	SCHELLE CRAPA RETEN
7	3619622M1		**X**	CABLE TIE	ATTACHE CABLE FASCETTA CAVI	KABELBINDER ENLACE DE CABLE
8	3713129M1		**1**	ROOF LIGHT	PLAFONNIER PLAFONIERA	DECKENLEUCHTE LUZ INTERIOR
9	***3385821M1***	8	**2**	BULB 12V 10W	AMPOULE 12V 10W BULBO 12V 10W	GLUEHL 12V 10W BOMBILLA 12V 10W
10	3001162X1	M4X16	**2**	SCREW	VIS VITE	SCHRAUBE TORNILLO
11	339102X1	∅ 9MM	**2**	WASHER METRIC	RONDELLE METR. RONDELLA METRICO	SCHEIBE METRISCH ARANDELA METRICO
12	3001856X1	∅ 12MM	**2**	WASHER METRIC	RONDELLE METR. RONDELLA METRICO	SCHEIBE METRISCH ARANDELA METRICO
13	3019139X1	M4	**2**	NUT	ECROU DADO	MUTTER TUERCA

Roof Harness
Faisceau Plafond
Kabelnezt Dach
Fasciocavi Di Tetto
Haz De Hilos De Techo

80-120

With High Visibility Roof / Way Lights Fitted On T He Cab Roof
Avec Toit Haute Visibilite / Phares De Route Mont Essur Le Toit De La Cabine
Mit Darch Mit Sonnendach / Fahrscheinwerfer Am Kab Inenddach Montiert
Con Tetto Alta Visibilita / Projettori De Strada M Ontato Sopra Il Tetto De La Cabina
Con Tejado Alta Visibilitad / Farros De Catretera Sobre El Tejado De La Cabina

1-ZW22-003-A

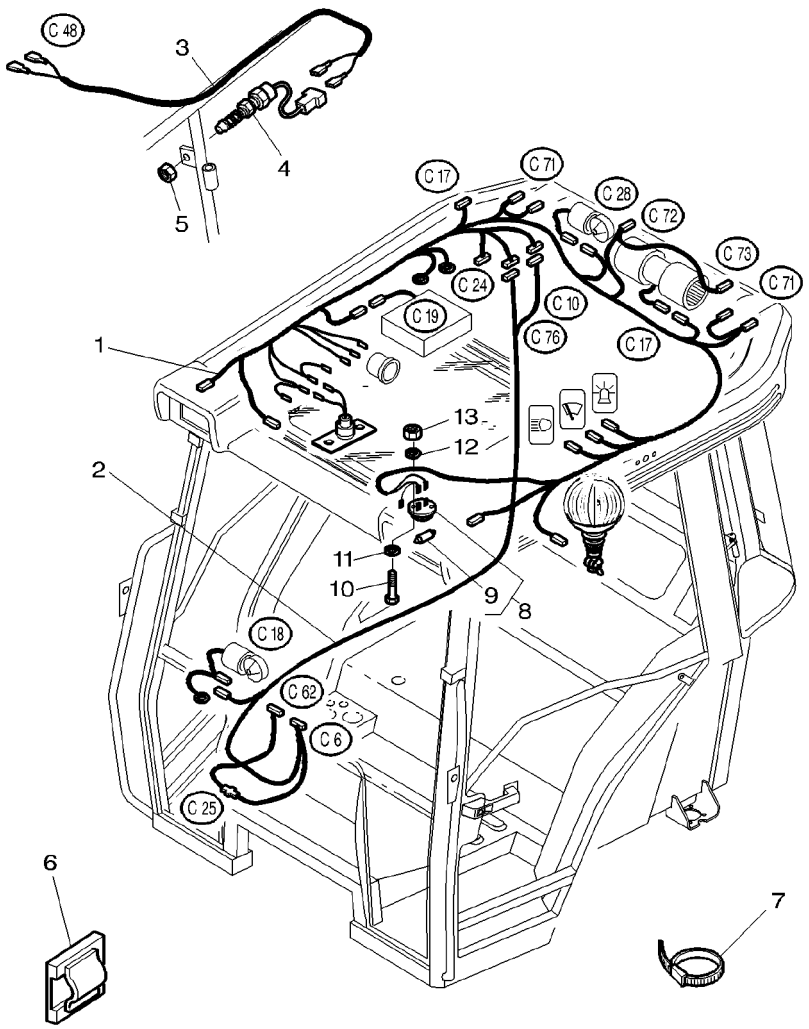

1	3780481M1		**1**	HARNESS	FAISCEAU FASCIOCAVI	KABELBAUM MAZO CABLES
2	3777696M3		**1**	HARNESS	FAISCEAU FASCIOCAVI	KABELBAUM MAZO CABLES
3	3714845M1		**1**	HARNESS	FAISCEAU FASCIOCAVI	KABELBAUM MAZO CABLES
4	***3780395M2***		**1**	SWITCH,INDIRECT	CONTACTEUR INTERRUTTORE IND	KONTAKTSCHALTER CONTACTOR
5	390333X1	M10	**1**	NUT METRIC	ECROU METRIQUE DADO METRICO	MUTTER METRISCH TUERCA METRICO
6	3760697M1		**X**	CLIP	CLIP FERMAGLIO	SCHELLE CRAPA RETEN
7	3619622M1		**X**	CABLE TIE	ATTACHE CABLE FASCETTA CAVI	KABELBINDER ENLACE DE CABLE
8	3713129M1		**1**	ROOF LIGHT	PLAFONNIER PLAFONIERA	DECKENLEUCHTE LUZ INTERIOR
9	***3385821M1***	8	**2**	BULB 12V 10W	AMPOULE 12V 10W BULBO 12V 10W	GLUEHL 12V 10W BOMBILLA 12V 10W
10	3001162X1	M4X16	**2**	SCREW	VIS VITE	SCHRAUBE TORNILLO
11	339102X1	∅ 9MM	**2**	WASHER METRIC	RONDELLE METR. RONDELLA METRICO	SCHEIBE METRISCH ARANDELA METRICO
12	3001856X1	∅ 12MM	**2**	WASHER METRIC	RONDELLE METR. RONDELLA METRICO	SCHEIBE METRISCH ARANDELA METRICO
13	3019139X1	M4	**2**	NUT	ECROU DADO	MUTTER TUERCA

Roof Harness Faisceau Plafond Kabelnezt Dach Fasciocavi Di Tetto Haz De Hilos De Techo	Platform Plateforme Plattform Piattaforma Plataforma	80-125

1-ZW32-001-A

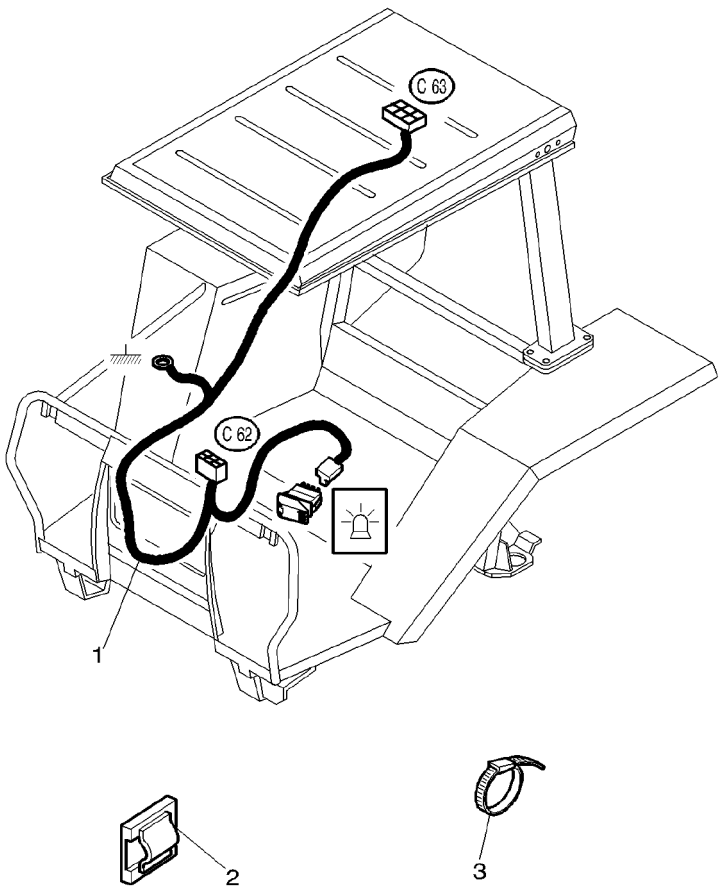

1	3777629M1	**1**	HARNESS	FAISCEAU FASCIOCAVI MAZO CABLES KABELBAUM
2	3760697M1	**X**	CLIP	CLIP FERMAGLIO SCHELLE CRAPA RETEN
3	3619622M1	**X**	CABLE TIE	ATTACHE CABLE FASCETTA CAVI KABELBINDER ENLACE DE CABLE

Lighting Harness	Roof
Faisceau Eclairage	Toit
Kabelnezt Beleuchtung	Dach
Fasciocavi Di Illuminazione	Tetto
Haz De Hilos De Iluminacion	Techo

80-130

1-ZW21-001-A

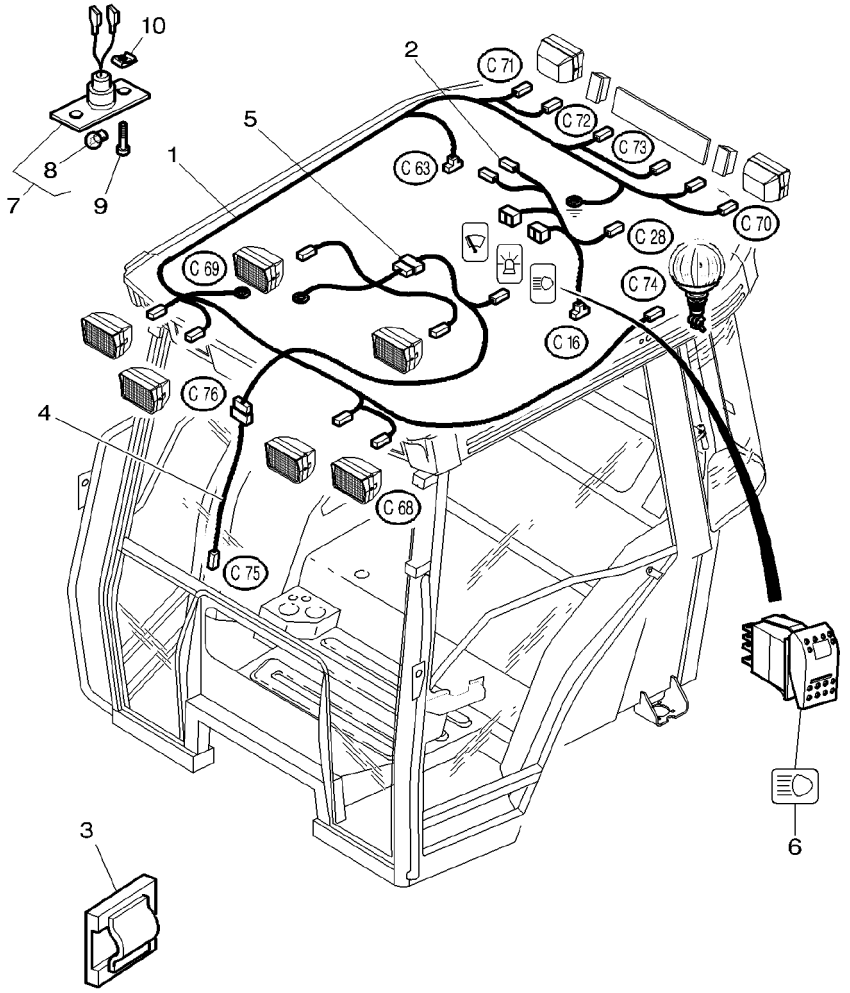

1	3778212M1		**1**	HARNESS	FAISCEAU FASCIOCAVI	KABELBAUM MAZO CABLES
2	3780127M1		**1**	HARNESS	FAISCEAU FASCIOCAVI	KABELBAUM MAZO CABLES
3	3760697M1	∅ 8MM	**X**	CLIP	CLIP FERMAGLIO	SCHELLE CRAPA RETEN
4	3713331M1	[A]	**1**	HARNESS	FAISCEAU FASCIOCAVI	KABELBAUM MAZO CABLES
5	3714887M92	[A]	**1**	HARNESS	FAISCEAU FASCIOCAVI	KABELBAUM MAZO CABLES
6	***3713145M1***	[A]	**1**	SWITCH,INDIRECT	CONTACTEUR INTERRUTTORE IND	KONTAKTSCHALTER CONTACTOR
7	72502614		**1**	ROOF LIGHT	PLAFONNIER PLAFONIERA	DECKENLEUCHTE LUZ INTERIOR
8	***71129920***	7	**1**	BULB	AMPOULE BULBO	GLUEHLAMPE LAMPARA
9	3009532X1	CBZ M4X16	**2**	SCREW	VIS VITE	SCHRAUBE TORNILLO
10	3010819X1	M4	**2**	NUT	ECROU DADO	MUTTER TUERCA

[A] WAY LIGHTS FITTED ON THE CAB ROOF
PHARES DE ROUTE MONTES SUR LE TOIT DE LA CABINE
FAHRSCHEINWERFER AM KABINENDACH MONTIERT
APROJETTORI DE STRADA MONTATO SOPRA IL TETTO DE LA CABINA
FARROS DE CATRETERA SOBRE EL TEJADO DE LA CABINA

Lighting Harness	**Roof**	**80-135**	**United States Only**
Faisceau Eclairage	**Toit**		**Etats Unis Seulement**
Kabelnezt Beleuchtung	**Dach**		**Vereinigten Staaten**
Fasciocavi Di Illuminazione	**Tetto**		**Solo Per Stati Uniti**
Haz De Hilos De Iluminacion	**Techo**		**Estados Unidos Solamente**

1-ZW21-002-A

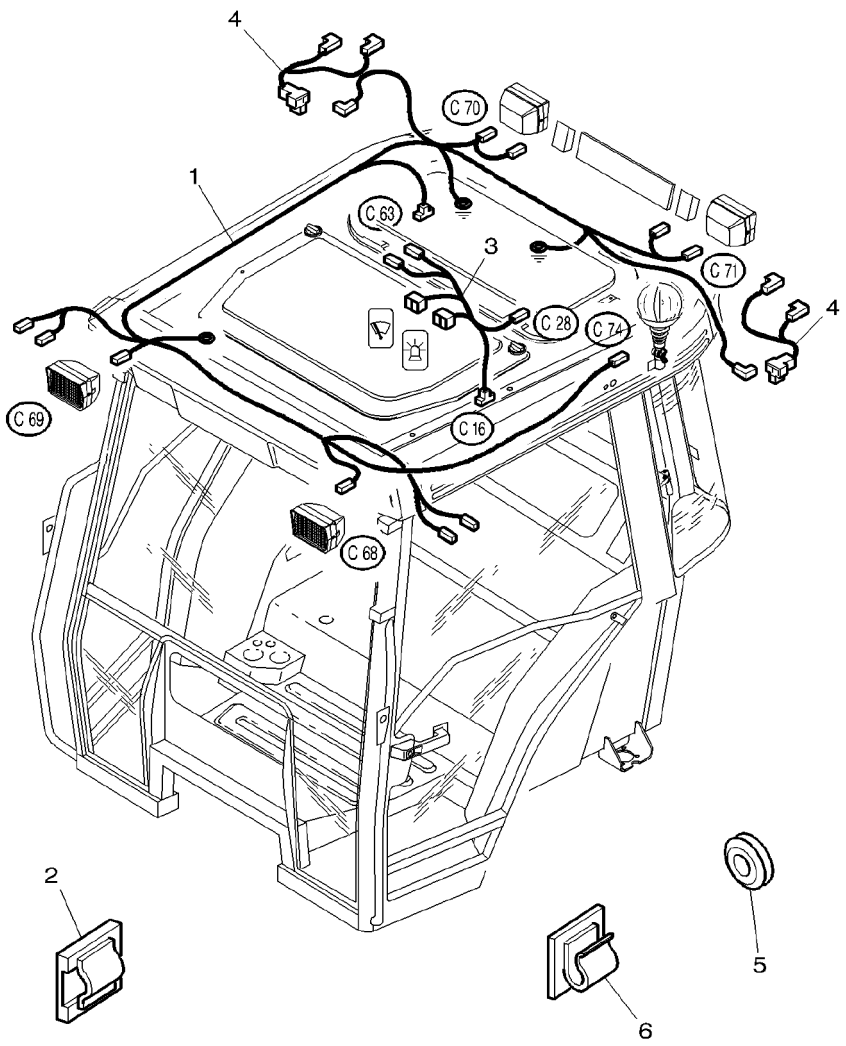

1	3778213M2	**1**	HARNESS	FAISCEAU FASCIOCAVI	KABELBAUM MAZO CABLES
2	3760697M1	**X**	CLIP	CLIP FERMAGLIO	SCHELLE CRAPA RETEN
3	3780127M1	**1**	HARNESS	FAISCEAU FASCIOCAVI	KABELBAUM MAZO CABLES
4	3779599M1	**2**	HARNESS	FAISCEAU FASCIOCAVI	KABELBAUM MAZO CABLES
5	367439X1	**1**	GROMMET	PASSE FIL GOMMINO	GUMMITUELLE PASACABLE
6	3583514M1	**4**	STRAP	PATTE CORREGGIA	LASCHE FAJA

Field Lights Harness
Faisceau De Phares De Travail
Kabelnezt Arbeitsscheinwerfer
Fasciacavi Di Luce Illuminazione Campo
Haz De Hilos Del Luces De Campo

80-140

Guideway / Footsteps / Fenders
Rambarde / Marchepieds / Ailes
Fuehrungsschiene / Tritjbretter / Kotfluegel
Rotia / Pedana / Parafanghi
Riel De Guia / Estribos / Guardabarros

1-ZW28-002-B

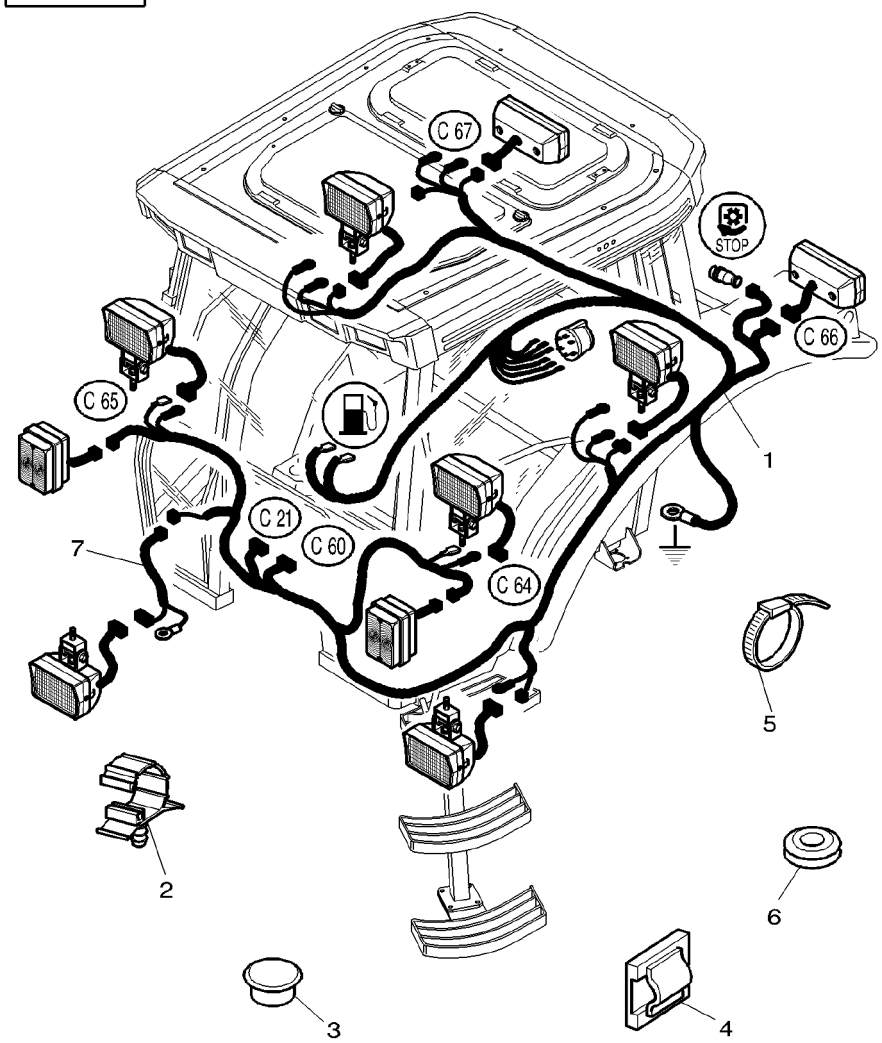

1	3779683M4	US	**1**	HARNESS	FAISCEAU FASCIOCAVI	KABELBAUM MAZO CABLES
2	3715130M1	∅ 10 MM	**4**	CLAMP	COLLIER FASCETTA	HALTESCHELLE ABRAZADERA
2	3715129M1	∅ 20MM	**5**	CLAMP	COLLIER FASCETTA	HALTESCHELLE ABRAZADERA
3	3580599M1	∅ 22X3	**1**	PLUG	BOUCHON TAPPO	VERSCHL.STOPFEN TAPON
4	3760697M1		**2**	CLIP	CLIP FERMAGLIO	SCHELLE CRAPA RETEN
5	3619622M1		**X**	CABLE TIE	ATTACHE CABLE FASCETTA CAVI	KABELBINDER ENLACE DE CABLE
6	3010670X1		**1**	GROMMET	PASSE FIL GOMMINO	GUMMITUELLE PASACABLE
7	3783465M2	➡ H250034 ◀▶ 1450MM	**1**	HARNESS	FAISCEAU FASCIOCAVI	KABELBAUM MAZO CABLES

Field Lights Harness
Faisceau De Phares De Travail
Kabelnezt Arbeitsscheinwerfer
Fasciacavi Di Luce Illuminazione Campo
Haz De Hilos Del Luces De Campo

80-145

Guideway / Footsteps / Fenders
Rambarde / Marchepieds / Ailes
Fuehrungsschiene / Tritjbretter / Kotfluegel
Rotia / Pedana / Parafanghi
Riel De Guia / Estribos / Guardabarros

1-ZW28-003-B

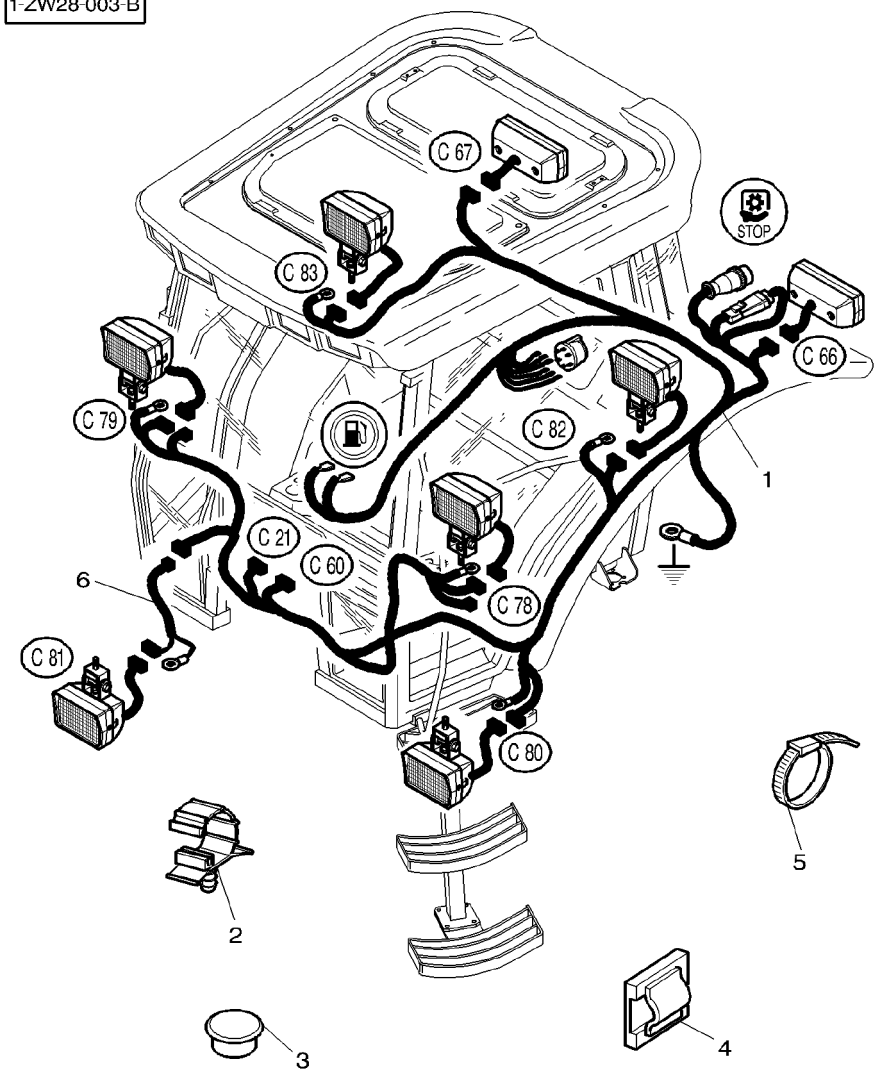

1	3777529M5	(US)	**1**	HARNESS	FAISCEAU FASCIOCAVI	KABELBAUM MAZO CABLES
2	3715130M1	∅ 10 MM	**3**	CLAMP	COLLIER FASCETTA	HALTESCHELLE ABRAZADERA
2	3715129M1	∅ 20MM	**5**	CLAMP	COLLIER FASCETTA	HALTESCHELLE ABRAZADERA
3	3580599M1	∅ 22X3	**1**	PLUG	BOUCHON TAPPO	VERSCHL.STOPFEN TAPON
4	3760697M1		**2**	CLIP	CLIP FERMAGLIO	SCHELLE CRAPA RETEN
5	3619622M1		**X**	CABLE TIE	ATTACHE CABLE FASCETTA CAVI	KABELBINDER ENLACE DE CABLE
6	3783465M2	➡ ◀▶ 1450MM	**1**	HARNESS	FAISCEAU FASCIOCAVI	KABELBAUM MAZO CABLES

1-ZS29-001-A

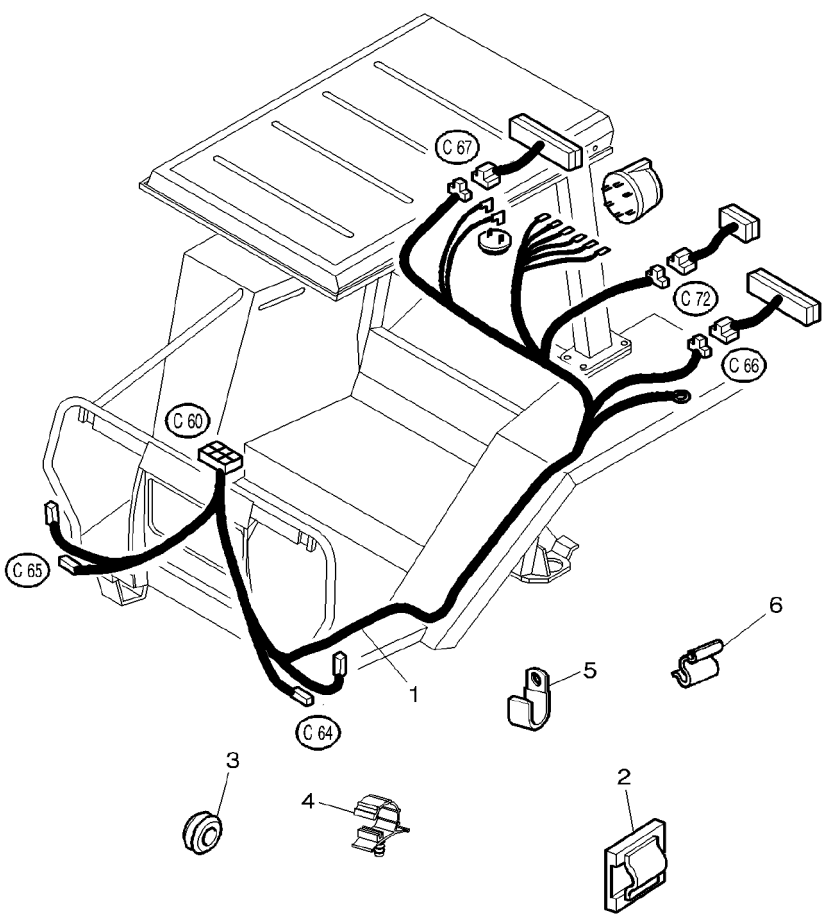

1	3783102M1		**1**	HARNESS	FAISCEAU FASCIOCAVI MAZO CABLES KABELBAUM
2	3760697M1		**2**	CLIP	CLIP FERMAGLIO SCHELLE CRAPA RETEN
3	367439X1	∅ 15−25	**1**	GROMMET	PASSE FIL GOMMINO PASACABLE GUMMITUELLE
4	3715130M1	∅ 10MM	**1**	CLAMP	COLLIER FASCETTA ABRAZADERA HALTESCHELLE
5	3583344M1		**2**	STRAP	PATTE CORREGGIA LASCHE FAJA
6	3598904M1		**1**	CLIP	CLIP FERMAGLIO SCHELLE CRAPA RETEN

1-ZS29-002-A

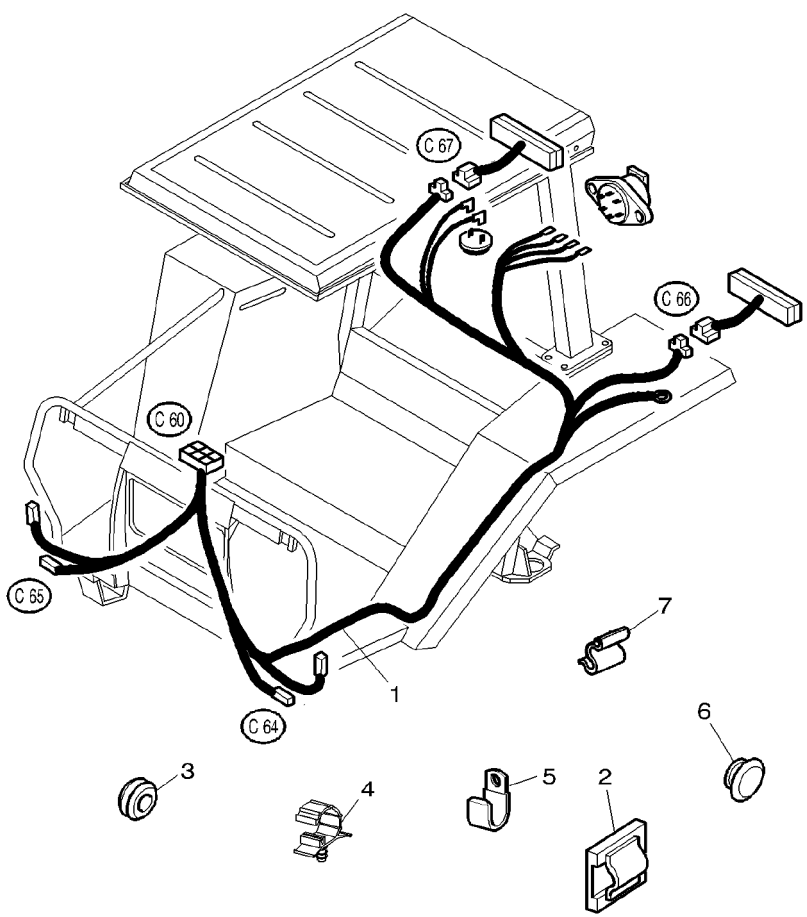

1	3783103M1		**1**	HARNESS	FAISCEAU FASCIOCAVI	KABELBAUM MAZO CABLES
2	3760697M1		**2**	CLIP	CLIP FERMAGLIO	SCHELLE CRAPA RETEN
3	367439X1	∅ 15−25	**1**	GROMMET	PASSE FIL GOMMINO	GUMMITUELLE PASACABLE
4	3715130M1	∅ 10MM	**1**	CLAMP	COLLIER FASCETTA	HALTESCHELLE ABRAZADERA
5	3583344M1		**2**	STRAP	PATTE CORREGGIA	LASCHE FAJA
6	3713742M1	[A] ∅ 9,5MM	**1**	PLUG	BOUCHON TAPPO	VERSCHL.STOPFEN TAPON
6	3580599M1	[A]	**1**	PLUG	BOUCHON TAPPO	VERSCHL.STOPFEN TAPON
7	3598904M1		**1**	CLIP	CLIP FERMAGLIO	SCHELLE CRAPA RETEN

[A] WITHOUT LICENCE PLATE
SANS PLAQUE DE POLICE
OHNE NUMMERSCHILD
SENZA CHAPA DE MATRICULA
SIN TARGA DE IMATRICULATION

Lighting Harness Roof	Platform
Faisceau Eclairage De Toit	Plateforme
Kabelnezt Beleuchtung Dach	Plattform
Fasciocavi Di Illuminazione Tetto	Piattaforma
Haz De Hilos De Iluminacion Techo	Plataforma

80-160

1-ZW31-001-A

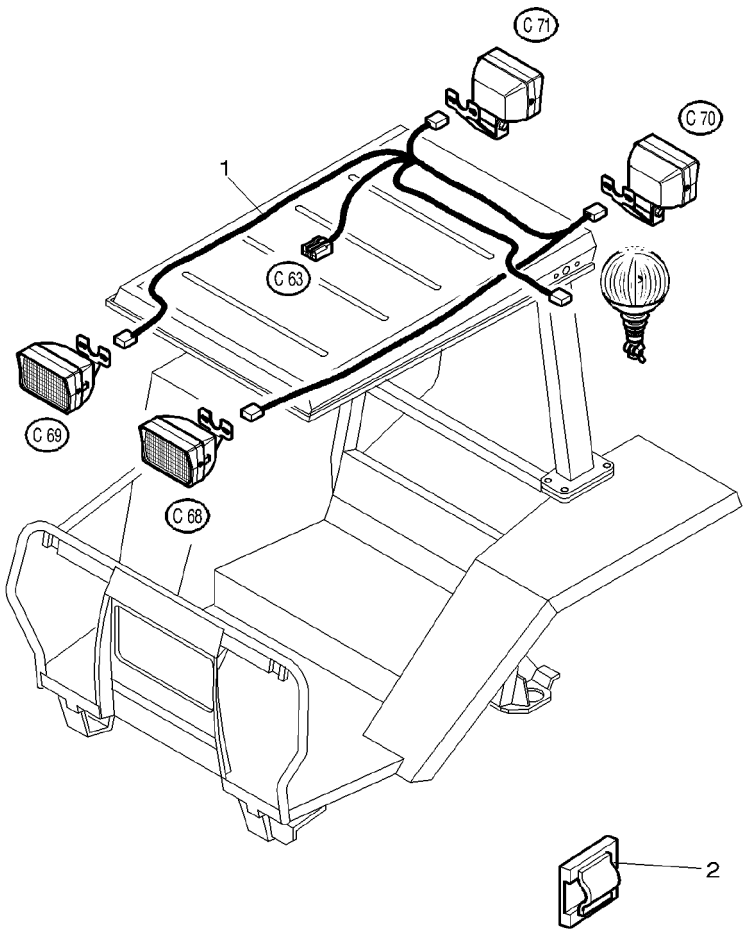

1	3777630M1	**1**	HARNESS	FAISCEAU FASCIOCAVI CLIP FERMAGLIO	KABELBAUM MAZO CABLES SCHELLE CRAPA RETEN
2	3760697M1	**X**	CLIP		

90

Electrical Wiring
Cablage Electrique
Kabelausruestung
Equipaggiamento Elettrico
Cableado Electrico

90-5

Without Electronic Lift
Sans Relevage Electronique
Ohne Electronische Kraftheber
Senza Sollevamento Elettronico
Con Levante Electronico

1-ZW04-001-A

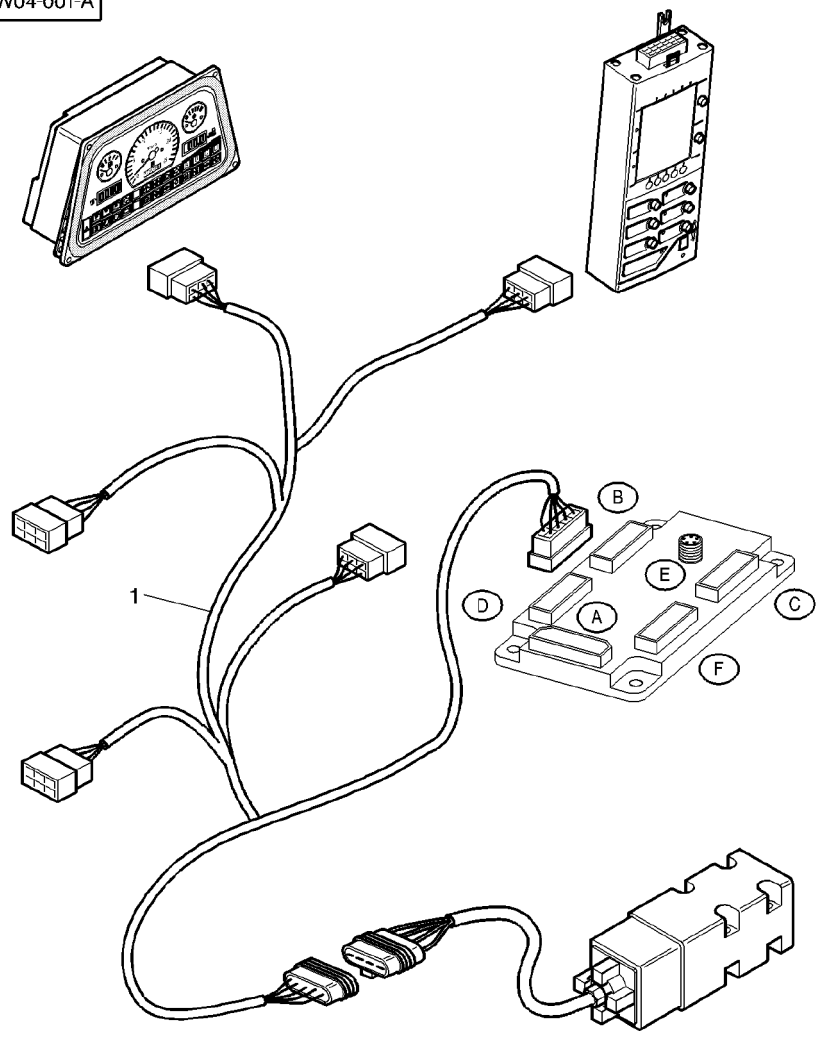

1	3780090M2	**1**	HARNESS	FAISCEAU FASCIOCAVI KABELBAUM MAZO CABLES

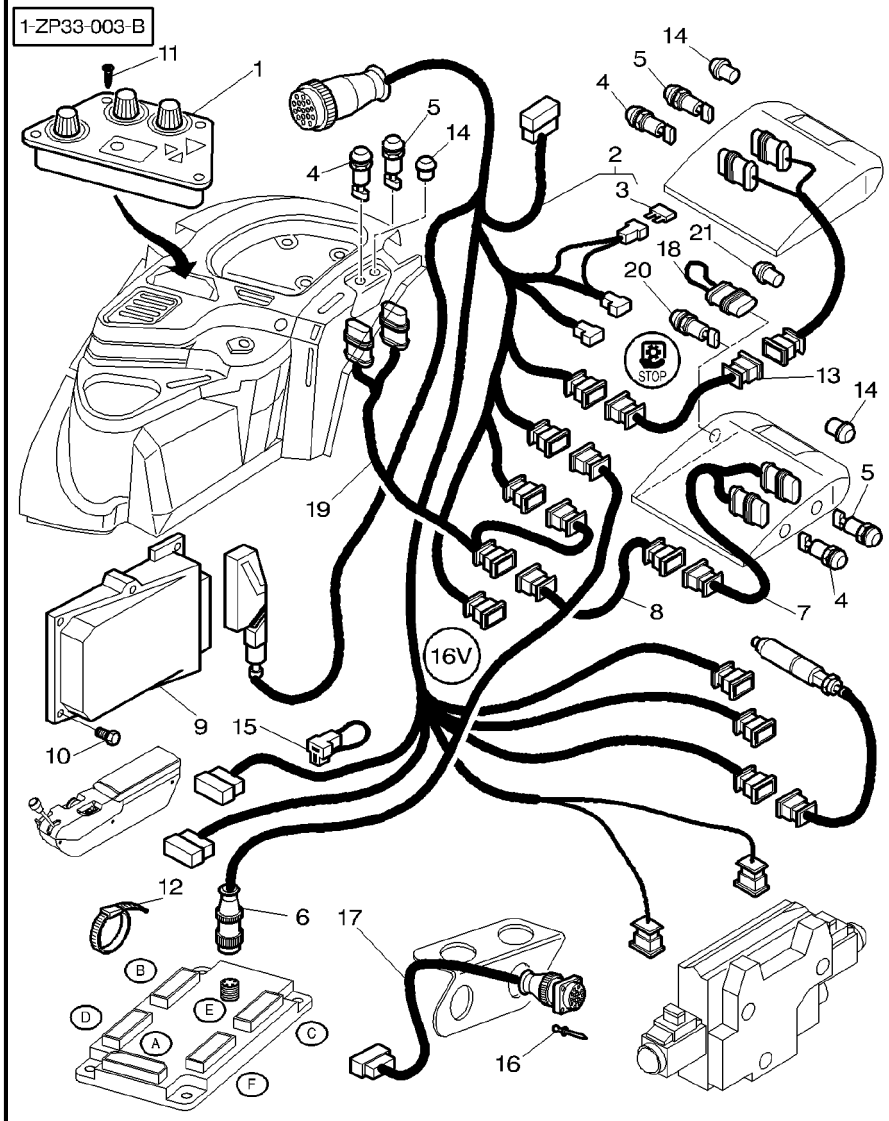

1	3778510M94		
2	3778505M92		
3	***3580868M1***	2	3 AMP
4	***3714137M1***	[A]	
5	***3714138M1***	[B]	
6	3778702M1	[C]	
6	3778707M1	[D]	
7	3714135M1		
8	3712725M1	◀ ◀▶	3500 MM
9	3778504M93	[C]	
9	3779194M93	[D]	
10	**3010506X1**	M5X16	
11	3010559X1	M4X12	
12	3619622M1		
13	3712726M1	▶	
14	3380422M1		
15	3715934M1	[C]	
16	391349X1		
17	3778708M1		
18	3782172M1		
19	3712724M1		
20	***3777568M2***		
21	3778808M1		

[A] UP
MONTEE
GESTIEGEN
SALITA
SUBIDA

1	ELECTRON CONSOLE	CONSOLE ELECTRON CONSOLLE ELETT.	ELECTRON-KONSOLE CONSOLA ELECTRON
1	ELECT.LIFT CABLE	CABLE REL ELECTR CAVO SOLL.ELECTR	ELECTR.HUB KABEL CAB.LEV.ELECTR.
1	FUSE	FUSIBLE FUSIBILE	SICHERUNG FUSIBLE
3	SWITCH,INDIRECT	CONTACTEUR INTERRUTTORE IND	KONTAKTSCHALTER CONTACTOR
3	SWITCH,INDIRECT	CONTACTEUR INTERRUTTORE IND	KONTAKTSCHALTER CONTACTOR
1	HARNESS	FAISCEAU FASCIOCAVI	KABELBAUM MAZO CABLES
1	HARNESS	FAISCEAU FASCIOCAVI	KABELBAUM MAZO CABLES
2	HARNESS	FAISCEAU FASCIOCAVI	KABELBAUM MAZO CABLES
1	HARNESS	FAISCEAU FASCIOCAVI	KABELBAUM MAZO CABLES
1	CALCULATOR	CALCULATEUR CENTRALINA	RECHNER CALCULADORA
1	CALCULATOR	CALCULATEUR CENTRALINA	RECHNER CALCULADORA
2	SCREW	VIS VITE	SCHRAUBE TORNILLO
4	SCREW	VIS VITE	SCHRAUBE TORNILLO
20	CABLE TIE	ATTACHE CABLE FASCETTA CAVI	KABELBINDER ENLACE DE CABLE
1	HARNESS	FAISCEAU FASCIOCAVI	KABELBAUM MAZO CABLES
X	PLUG	BOUCHON TAPPO	VERSCHL.STOPFEN TAPON
1	HARNESS	FAISCEAU FASCIOCAVI	KABELBAUM MAZO CABLES
4	RIVET	RIVET RIVETTO	NIET REMACHE
1	HARNESS	FAISCEAU FASCIOCAVI	KABELBAUM MAZO CABLES
1	WIRE	FIL FILO DI FERRO	DRAHT HILO
1	HARNESS	FAISCEAU FASCIOCAVI	KABELBAUM MAZO CABLES
1	SWITCH,INDIRECT	CONTACTEUR INTERRUTTORE IND	KONTAKTSCHALTER CONTACTOR
1	PLUG	BOUCHON TAPPO	VERSCHL.STOPFEN TAPON

1-ZP33-003-B

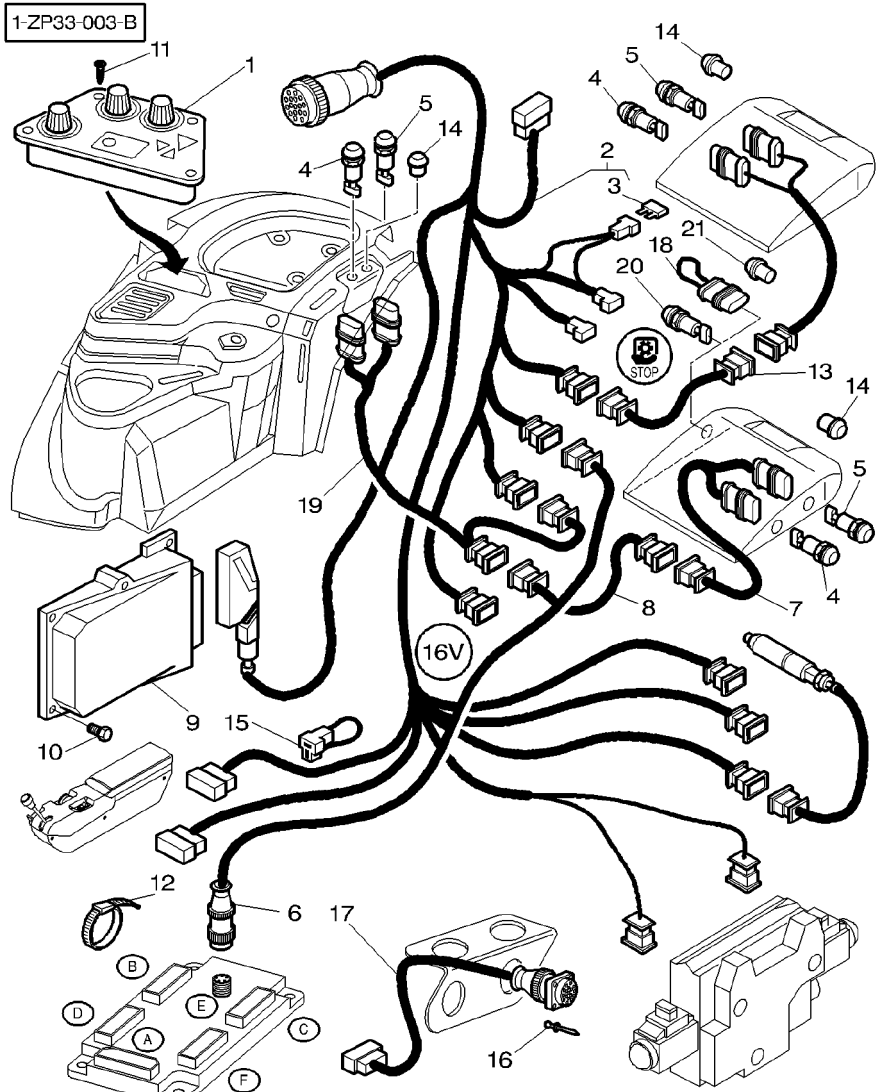

[B] DOWN
DESCENTE
HERABSTEIGEN
DISCESA
BAJADA

[C] WITH DYNASHIFT
AVEC DYNASHIFT
MIT DYNASHIFT
CON DYNASHIFT
CON DYNASHIFT

[D] WITH FULL POWERSHIFT
AVEC FULL POWERSHIFT
MIT FULL POWERSHIFT
CON FULL POWERSHIFT
CON FULL POWERSHIFT

Electronic Lift
Relevage Electronique
Electron Aushebg
Sollevatore Elettronico
Levante Hidraulico

Main Harness
Faisceau Principal
Hauplkabelbaum
Cavi Principali
Arnes Principal

90-15

With Power Shuttle
Avec Inverseur Sous Couple
Mit Unter Drehmoment
Con Sotto Coppia
Con Inversor Sub Par

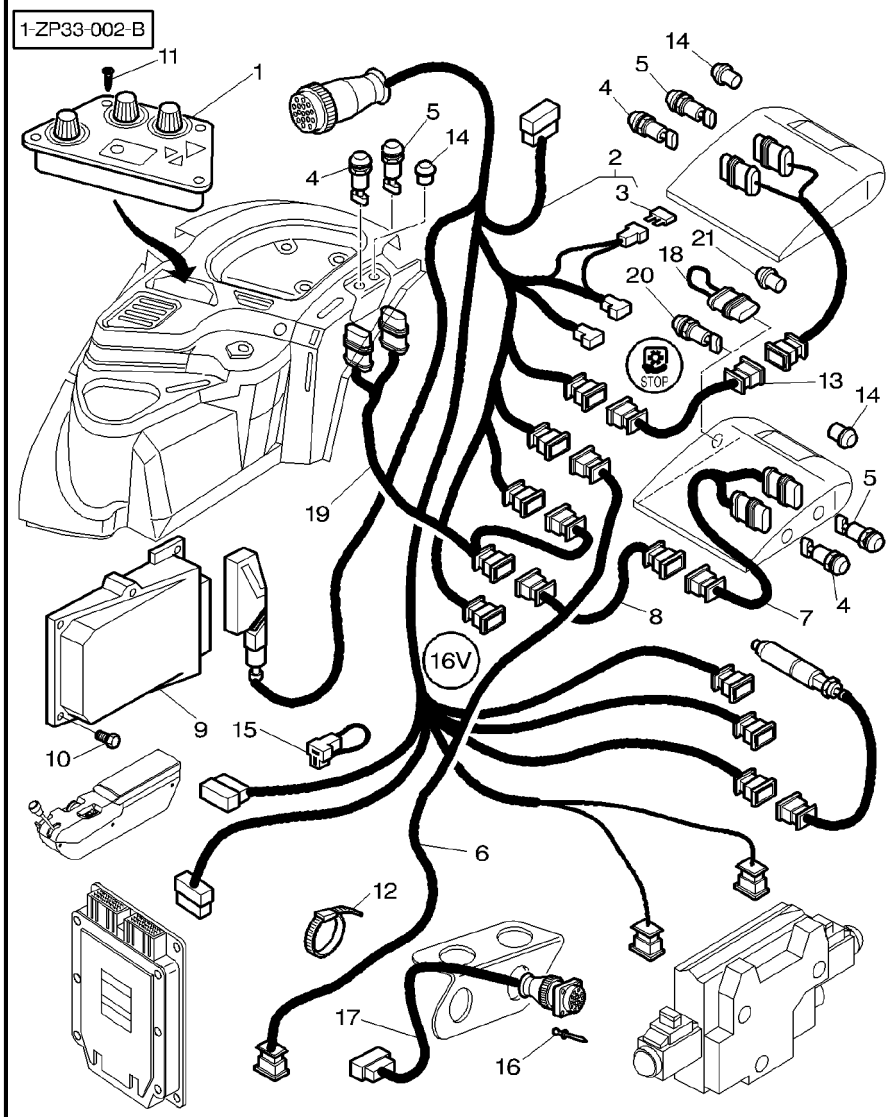

1	3778510M94		**1**	ELECTRON CONSOLE	CONSOLE ELECTRON CONSOLLE ELETT.	ELECTRON-KONSOLE CONSOLA ELECTRON
2	3778505M92		**1**	ELECT.LIFT CABLE	CABLE REL ELECTR CAVO SOLL.ELECTR	ELECTR.HUB KABEL CAB.LEV.ELECTR.
3	***3580868M1***	2 3 AMP	**1**	FUSE	FUSIBLE FUSIBILE	SICHERUNG FUSIBLE
4	***3714137M1***	[A]	**3**	SWITCH,INDIRECT	CONTACTEUR INTERRUTTORE IND	KONTAKTSCHALTER CONTACTOR
5	***3714138M1***	[B]	**3**	SWITCH,INDIRECT	CONTACTEUR INTERRUTTORE IND	KONTAKTSCHALTER CONTACTOR
6	3778707M1		**1**	HARNESS	FAISCEAU FASCIOCAVI	KABELBAUM MAZO CABLES
7	3714135M1		**2**	HARNESS	FAISCEAU FASCIOCAVI	KABELBAUM MAZO CABLES
8	3712725M1	◀ ◀▶ 3500 MM	**1**	HARNESS	FAISCEAU FASCIOCAVI	KABELBAUM MAZO CABLES
9	3782615M91		**1**	CALCULATOR	CALCULATEUR CENTRALINA	RECHNER CALCULADORA
10	**3010506X1**	M5X16	**2**	SCREW	VIS VITE	SCHRAUBE TORNILLO
11	3010559X1	M4X12	**4**	SCREW	VIS VITE	SCHRAUBE TORNILLO
12	3619622M1		**20**	CABLE TIE	ATTACHE CABLE FASCETTA CAVI	KABELBINDER ENLACE DE CABLE
13	3712726M1	▶	**1**	HARNESS	FAISCEAU FASCIOCAVI	KABELBAUM MAZO CABLES
14	3380422M1		**X**	PLUG	BOUCHON TAPPO	VERSCHL.STOPFEN TAPON
15	3715934M1		**1**	HARNESS	FAISCEAU FASCIOCAVI	KABELBAUM MAZO CABLES
16	391349X1		**4**	RIVET	RIVET RIVETTO	NIET REMACHE
17	3778708M1		**1**	HARNESS	FAISCEAU FASCIOCAVI	KABELBAUM MAZO CABLES
18	3782172M1	(US)	**1**	WIRE	FIL FILO DI FERRO	DRAHT HILO
19	3712724M1		**1**	HARNESS	FAISCEAU FASCIOCAVI	KABELBAUM MAZO CABLES
20	***3777568M2***	(US)	**1**	SWITCH,INDIRECT	CONTACTEUR INTERRUTTORE IND	KONTAKTSCHALTER CONTACTOR
21	3778808M1		**1**	PLUG	BOUCHON TAPPO	VERSCHL.STOPFEN TAPON

[A] UP
MONTEE
GESTIEGEN
SALITA
SUBIDA

Electronic Lift Relevage Electronique Electron Aushebg Sollevatore Elettronico Levante Hidraulico	Main Harness Faisceau Principal Hauplkabelbaum Cavi Principali Arnes Principal	90-15	With Power Shuttle Avec Inverseur Sous Couple Mit Unter Drehmoment Con Sotto Coppia Con Inversor Sub Par

1-ZP33-002-B

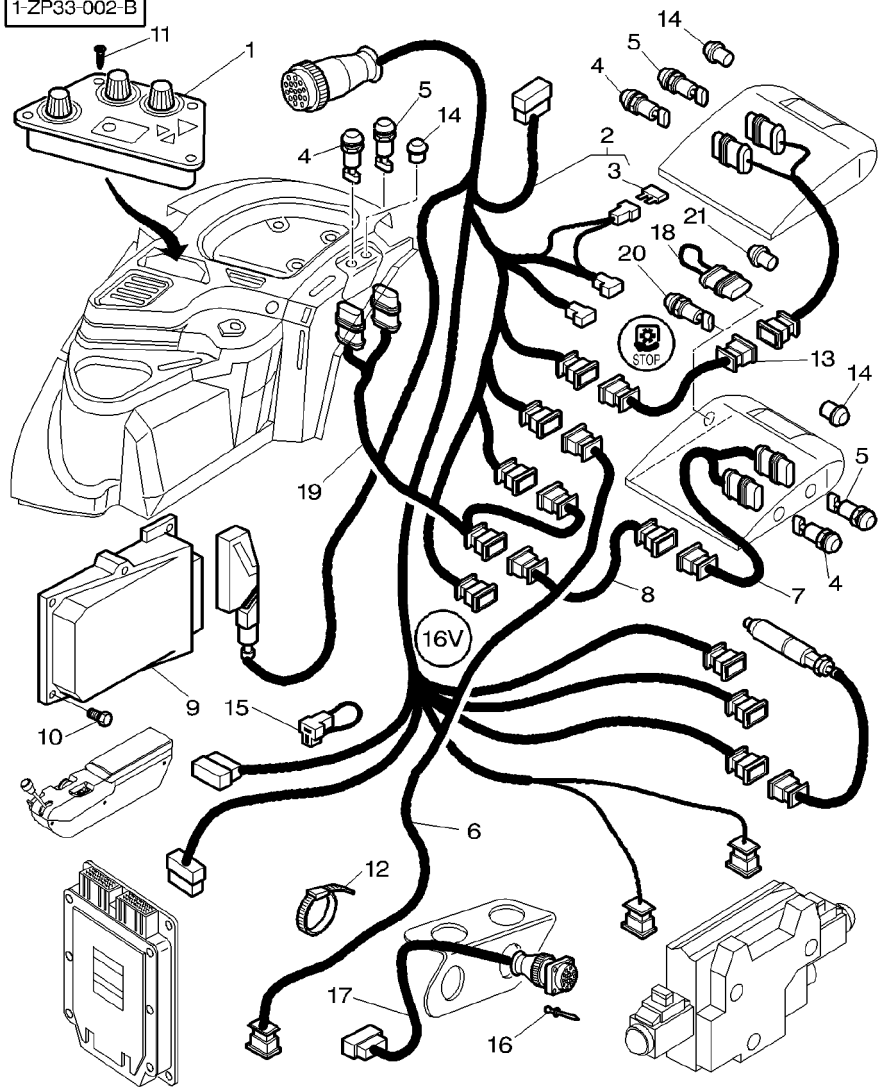

[B] DOWN
DESCENTE
HERABSTEIGEN
DISCESA
BAJADA

Electronic Lift **Relevage Electronique** **Electron Aushebg** **Sollevatore Elettronico** **Levante Hidraulico**	**Main Harness** **Faisceau Principal** **Hauplkabelbaum** **Cavi Principali** **Arnes Principal**	**90-20**

Dual Control Up To H277037
Dual Control Jusqu'Au H277037
Dual Control Bis H277037
Dual Control Fino Alla H277037
Dual Control Hasta H277037

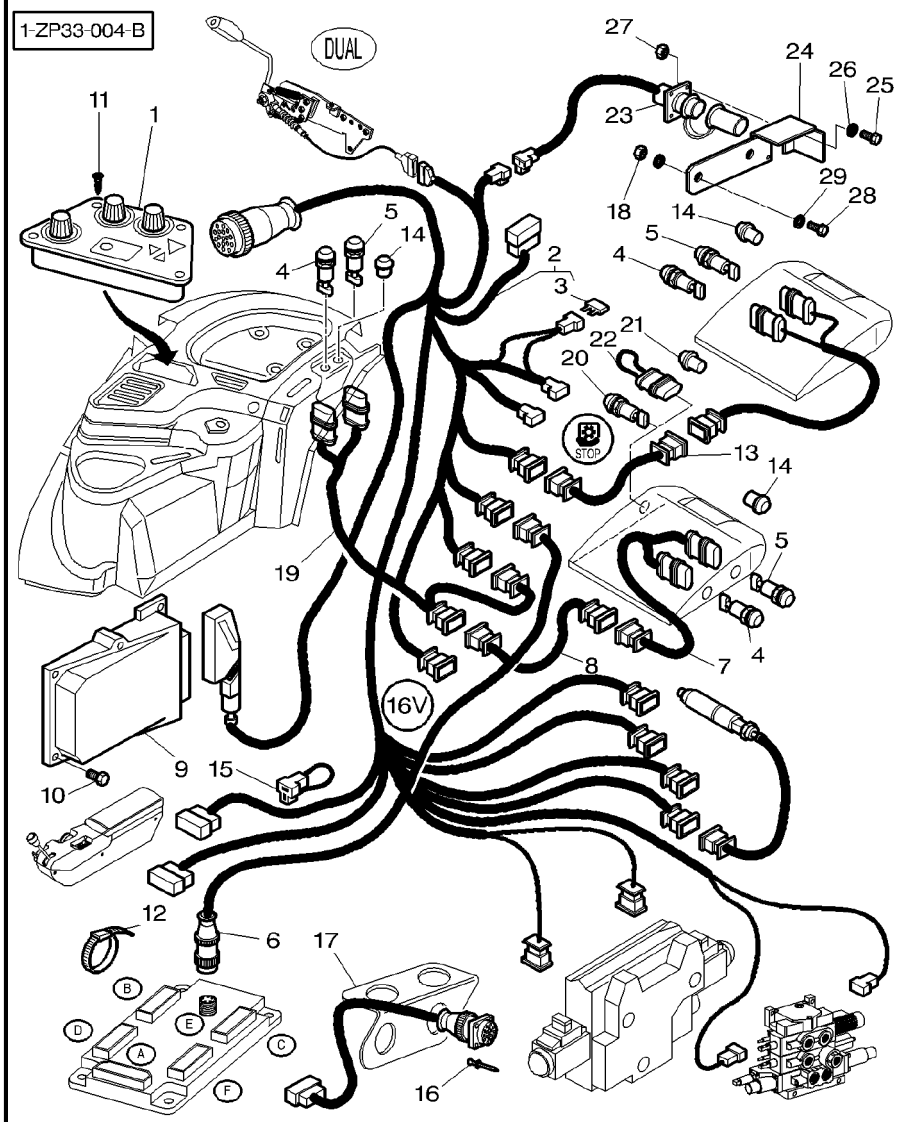

1	3778510M94		**1**	ELECTRON CONSOLE	CONSOLE ELECTRON CONSOLLE ELETT.	ELECTRON-KONSOLE CONSOLA ELECTRON
2	3783148M92		**1**	HARNESS	FAISCEAU FASCIOCAVI	KABELBAUM MAZO CABLES
3	***3580868M1***	2 3 AMP	**1**	FUSE	FUSIBLE FUSIBILE	SICHERUNG FUSIBLE
4	***3714137M1***	[A]	**3**	SWITCH,INDIRECT	CONTACTEUR INTERRUTTORE IND	KONTAKTSCHALTER CONTACTOR
5	***3714138M1***	[B]	**3**	SWITCH,INDIRECT	CONTACTEUR INTERRUTTORE IND	KONTAKTSCHALTER CONTACTOR
6	3778702M1	[C]	**1**	HARNESS	FAISCEAU FASCIOCAVI	KABELBAUM MAZO CABLES
6	3778707M1	[D]	**1**	HARNESS	FAISCEAU FASCIOCAVI	KABELBAUM MAZO CABLES
7	3714135M1		**2**	HARNESS	FAISCEAU FASCIOCAVI	KABELBAUM MAZO CABLES
8	3712725M1	◀ ◀▶ 3500 MM	**1**	HARNESS	FAISCEAU FASCIOCAVI	KABELBAUM MAZO CABLES
9	3783217M91	[C] 100KB	**1**	CALCULATOR	CALCULATEUR CENTRALINA	RECHNER CALCULADORA
9	3783218M91	[D] 250KB	**1**	CALCULATOR	CALCULATEUR CENTRALINA	RECHNER CALCULADORA
10	**3010506X1**	M5X16	**2**	SCREW	VIS VITE	SCHRAUBE TORNILLO
11	3010559X1	M4X12	**4**	SCREW	VIS VITE	SCHRAUBE TORNILLO
12	3619622M1		**20**	CABLE TIE	ATTACHE CABLE FASCETTA CAVI	KABELBINDER ENLACE DE CABLE
13	3712726M1	▶	**1**	HARNESS	FAISCEAU FASCIOCAVI	KABELBAUM MAZO CABLES
14	3380422M1		**X**	PLUG	BOUCHON TAPPO	VERSCHL.STOPFEN TAPON
15	3715934M1		**1**	HARNESS	FAISCEAU FASCIOCAVI	KABELBAUM MAZO CABLES
16	391349X1		**4**	RIVET	RIVET RIVETTO	NIET REMACHE
17	3778708M1		**1**	HARNESS	FAISCEAU FASCIOCAVI	KABELBAUM MAZO CABLES
18	3009693X1		**2**	NUT METRIC	ECROU METRIQUE DADO METRICO	MUTTER METRISCH TUERCA METRICO
19	3712724M1		**1**	HARNESS	FAISCEAU FASCIOCAVI	KABELBAUM MAZO CABLES
20	***3777568M2***		**1**	SWITCH,INDIRECT	CONTACTEUR INTERRUTTORE IND	KONTAKTSCHALTER CONTACTOR
21	3778808M1		**1**	PLUG	BOUCHON TAPPO	VERSCHL.STOPFEN TAPON
22	3782172M1		**1**	WIRE	FIL FILO DI FERRO	DRAHT HILO
23	3617813M1		**1**	HARNESS	FAISCEAU FASCIOCAVI	KABELBAUM MAZO CABLES
24	3783205M1		**1**	SUPPORT	SUPPORT SUPPORTO	LAGERUNG DISPOS.DE SOSTEN

Electronic Lift	Main Harness	90-20	Dual Control Up To H277037
Relevage Electronique	Faisceau Principal		Dual Control Jusqu'Au H277037
Electron Aushebg	Hauplkabelbaum		Dual Control Bis H277037
Sollevatore Elettronico	Cavi Principali		Dual Control Fino Alla H277037
Levante Hidraulico	Arnes Principal		Dual Control Hasta H277037

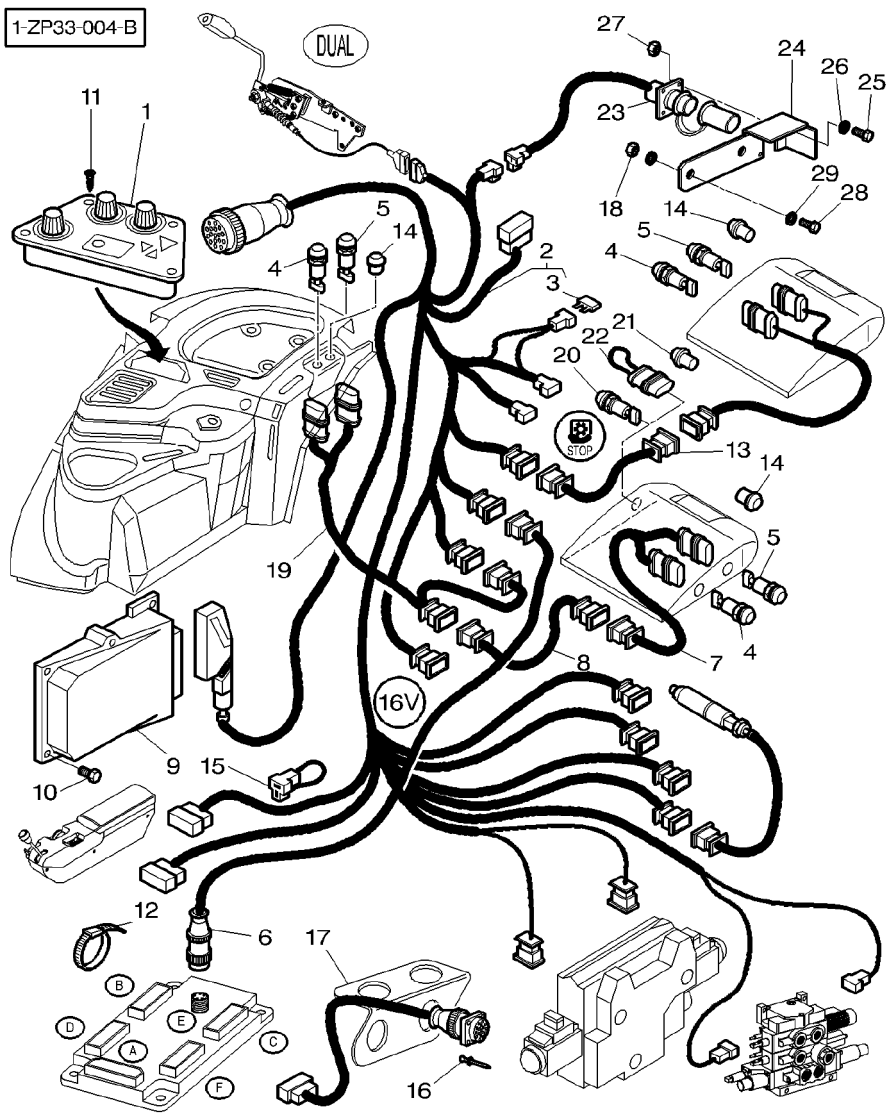

25	3001162X1		
26	339102X1		
27	1443615X1		
28	3009494X1	M10X35	
29	390734X1		

4	SCREW	VIS VITE	SCHRAUBE TORNILLO
4	WASHER METRIC	RONDELLE METR. RONDELLA METRICO	SCHEIBE METRISCH ARANDELA METRICO
4	NUT METRIC	ECROU METRIQUE DADO METRICO	MUTTER METRISCH TUERCA METRICO
2	SCREW METRIC	VIS METRIQUE VITE METRICA	SCHRAUBE METR TORNILLO METRICO
4	WASHER METRIC	RONDELLE METR. RONDELLA METRICO	SCHEIBE METRISCH ARANDELA METRICO

[A] UP
MONTEE
GESTIEGEN
SALITA
SUBIDA

[B] DOWN
DESCENTE
HERABSTEIGEN
DISCESA
BAJADA

[C] WITH DYNASHIFT
AVEC DYNASHIFT
MIT DYNASHIFT
CON DYNASHIFT
CON DYNASHIFT

[D] WITH FULL POWERSHIFT
AVEC FULL POWERSHIFT
MIT FULL POWERSHIFT
CON FULL POWERSHIFT
CON FULL POWERSHIFT

Electronic Lift	**Main Harness**
Relevage Electronique	**Faisceau Principal**
Electron Aushebg	**Hauplkabelbaum**
Sollevatore Elettronico	**Cavi Principali**
Levante Hidraulico	**Arnes Principal**

90-25

Dual Control From H277038
Dual Control A Partir Du H277038
Dual Control Ab H277038
Dual Control Dalla H277038
Dual Control A Partir Del H277038

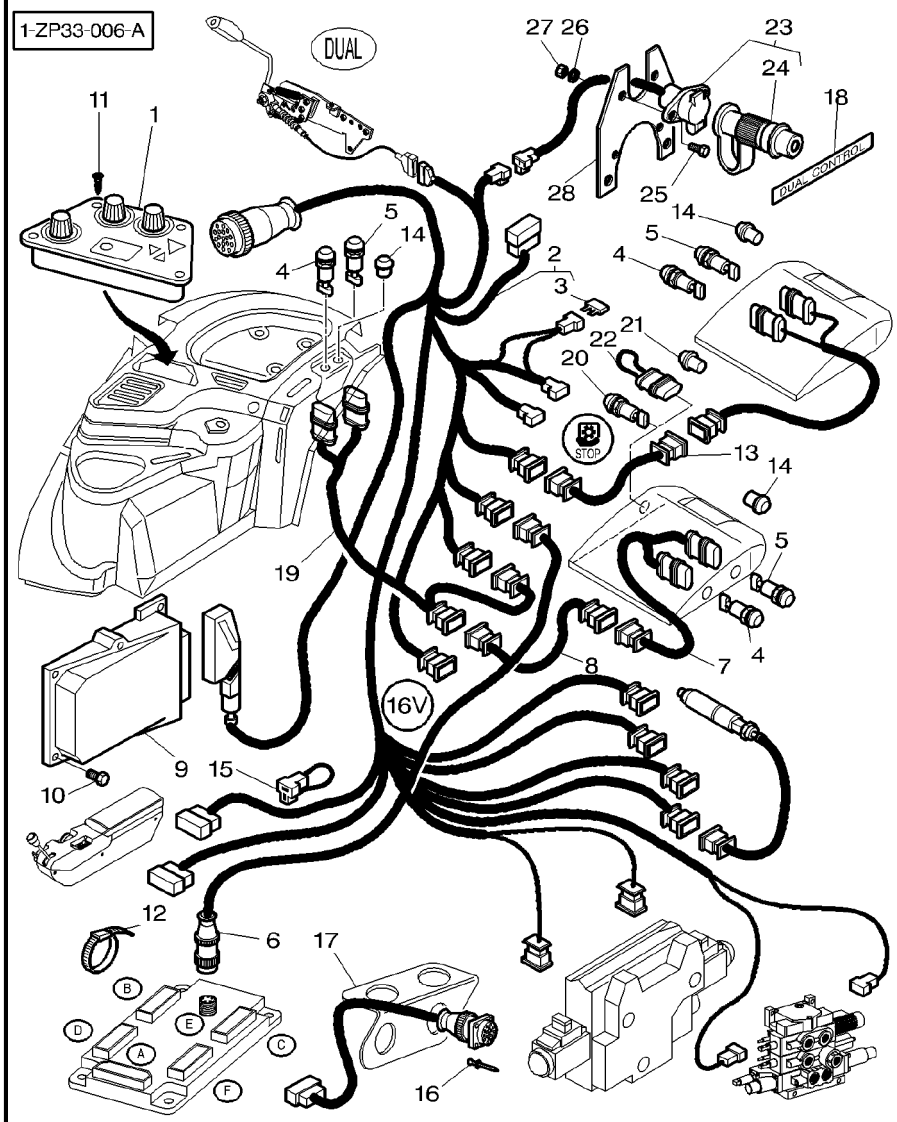

1	3778510M94		**1**	ELECTRON CONSOLE	CONSOLE ELECTRON CONSOLLE ELETT.	ELECTRON-KONSOLE CONSOLA ELECTRON
2	3783148M92		**1**	HARNESS	FAISCEAU FASCIOCAVI	KABELBAUM MAZO CABLES
3	***3580868M1***	2 3 AMP	**1**	FUSE	FUSIBLE FUSIBILE	SICHERUNG FUSIBLE
4	***3714137M1***	[A]	**3**	SWITCH,INDIRECT	CONTACTEUR INTERRUTTORE IND	KONTAKTSCHALTER CONTACTOR
5	***3714138M1***	[B]	**3**	SWITCH,INDIRECT	CONTACTEUR INTERRUTTORE IND	KONTAKTSCHALTER CONTACTOR
6	3778702M1	[C]	**1**	HARNESS	FAISCEAU FASCIOCAVI	KABELBAUM MAZO CABLES
6	3778707M1	[D]	**1**	HARNESS	FAISCEAU FASCIOCAVI	KABELBAUM MAZO CABLES
7	3714135M1		**2**	HARNESS	FAISCEAU FASCIOCAVI	KABELBAUM MAZO CABLES
8	3712725M1	◀ ◀▶ 3500 MM	**1**	HARNESS	FAISCEAU FASCIOCAVI	KABELBAUM MAZO CABLES
9	3783217M91	[C] 100KB	**1**	CALCULATOR	CALCULATEUR CENTRALINA	RECHNER CALCULADORA
9	3783218M91	[D] 250KB	**1**	CALCULATOR	CALCULATEUR CENTRALINA	RECHNER CALCULADORA
10	**3010506X1**	M5X16	**2**	SCREW	VIS VITE	SCHRAUBE TORNILLO
11	3010559X1	M4X12	**4**	SCREW	VIS VITE	SCHRAUBE TORNILLO
12	3619622M1		**20**	CABLE TIE	ATTACHE CABLE FASCETTA CAVI	KABELBINDER ENLACE DE CABLE
13	3712726M1	▶	**1**	HARNESS	FAISCEAU FASCIOCAVI	KABELBAUM MAZO CABLES
14	3380422M1		**X**	PLUG	BOUCHON TAPPO	VERSCHL.STOPFEN TAPON
15	3715934M1		**1**	HARNESS	FAISCEAU FASCIOCAVI	KABELBAUM MAZO CABLES
16	391349X1		**4**	RIVET	RIVET RIVETTO	NIET REMACHE
17	3778708M1		**1**	HARNESS	FAISCEAU FASCIOCAVI	KABELBAUM MAZO CABLES
18	3783975M1		**1**	DECAL	DECALCOMANIE DECALCOMANIA	AUFKLEBER CALCOMANIA
19	3712724M1		**1**	HARNESS	FAISCEAU FASCIOCAVI	KABELBAUM MAZO CABLES
20	***3777568M2***		**1**	SWITCH,INDIRECT	CONTACTEUR INTERRUTTORE IND	KONTAKTSCHALTER CONTACTOR
21	3778808M1		**1**	PLUG	BOUCHON TAPPO	VERSCHL.STOPFEN TAPON
22	3782172M1		**1**	WIRE	FIL FILO DI FERRO	DRAHT HILO
23	3783970M91		**1**	HARNESS	FAISCEAU FASCIOCAVI	KABELBAUM MAZO CABLES
24		23 REF NO 23	**1**	PLUG 7 PIN MALE	PRISE MALE MASCHIO DA 7	STECKER 7 POLIG ENCHUFE 7 ESPIGA

Electronic Lift **Relevage Electronique** **Electron Aushebg** **Sollevatore Elettronico** **Levante Hidraulico**	**Main Harness** **Faisceau Principal** **Hauplkabelbaum** **Cavi Principali** **Arnes Principal**	**90-25**

Dual Control From H277038
Dual Control A Partir Du H277038
Dual Control Ab H277038
Dual Control Dalla H277038
Dual Control A Partir Del H277038

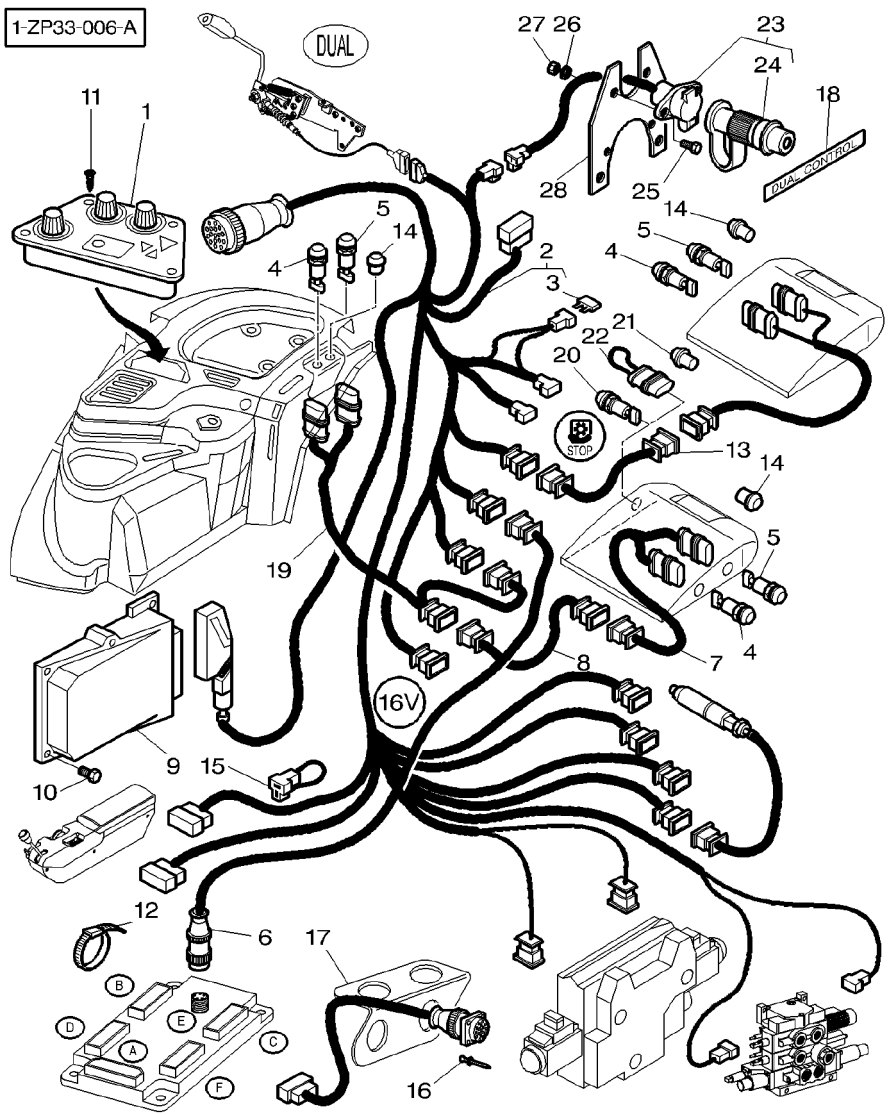

25	390990X1	M5X12	**2**	SCREW METRIC	VIS METRIQUE VITE METRICA	SCHRAUBE METR TORNILLO METRICO
26	390469X1		**2**	WASHER METRIC	RONDELLE METR. RONDELLA METRICO	SCHEIBE METRISCH ARANDELA METRICO
27	3010477X1		**2**	NUT METRIC	ECROU METRIQUE DADO METRICO	MUTTER METRISCH TUERCA METRICO
28	3783962M1		**1**	SUPPORT	SUPPORT SUPPORTO	LAGERUNG DISPOS.DE SOSTEN

[A] UP
MONTEE
GESTIEGEN
SALITA
SUBIDA

[B] DOWN
DESCENTE
HERABSTEIGEN
DISCESA
BAJADA

[C] WITH DYNASHIFT
AVEC DYNASHIFT
MIT DYNASHIFT
CON DYNASHIFT
CON DYNASHIFT

[D] WITH FULL POWERSHIFT
AVEC FULL POWERSHIFT
MIT FULL POWERSHIFT
CON FULL POWERSHIFT
CON FULL POWERSHIFT

1-ZP37-001-B

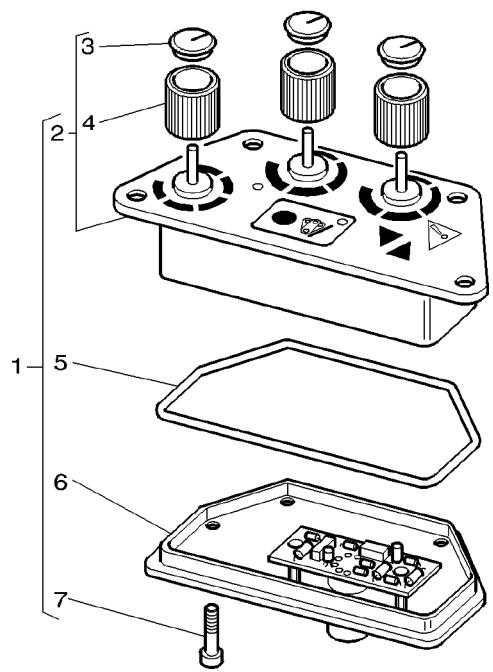

1	3778510M94		
2	3902809M94	1	
3	3902440M1	2	
4	3902808M1	2	H140013
4	3903452M1	2	H140014
5	3902452M1	1	
6	3902810M91	1	
7	3902811M1	1	

1	ELECTRON CONSOLE	CONSOLE ELECTRON CONSOLLE ELETT.	ELECTRON−KONSOLE CONSOLA ELECTRON
1	COVER	COUVERCLE COPERCHIO	DECKEL CUBIERTA
3	HELMET	CAPUCHON CASCO	SCHUTZHELM CASCO
3	BUTTON	BOUTON PULSANTE	KNOPFTASTE PULSADOR
3	BUTTON	BOUTON PULSANTE	KNOPFTASTE PULSADOR
1	O RING	JOINT TORIQUE ANELLO OR	O−RING JUNTA TORICA
1	PRINTED CIRCUIT	CIRCUIT IMPRIME CIRCUITO STAMP.	GEDRUCKTESCHALTG CIRCUITO IMPRESO
4	SCREW	VIS VITE	SCHRAUBE TORNILLO

1-ZP81-001-A

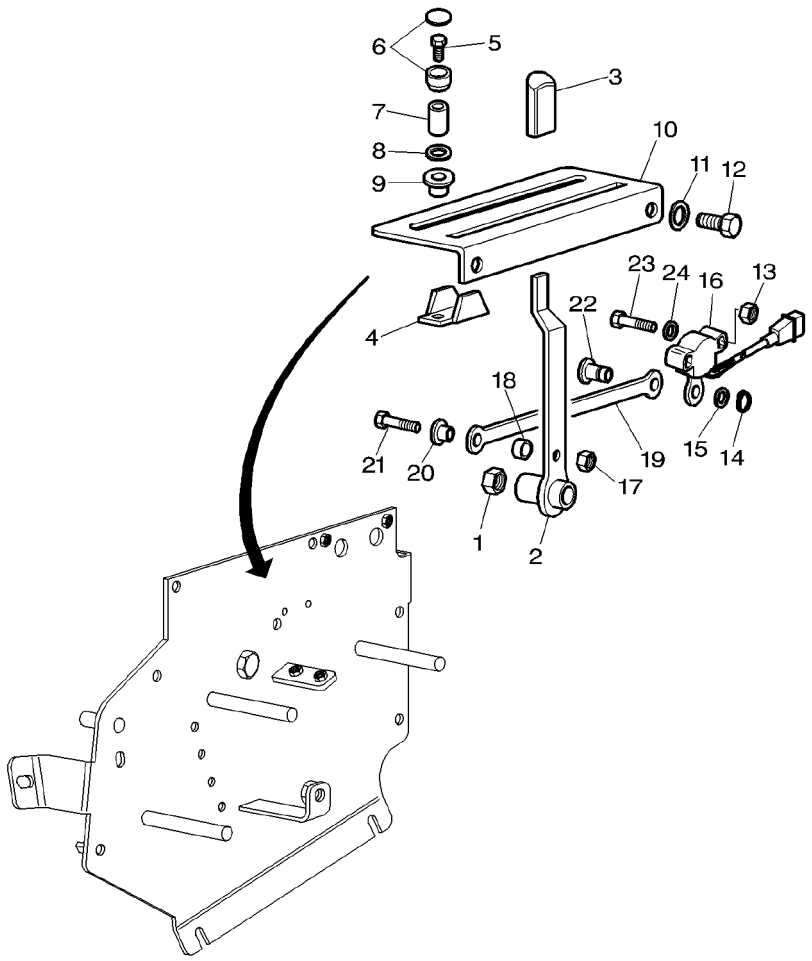

1	1442190X1		**1**	NUT METRIC	ECROU METRIQUE DADO METRICO	MUTTER METRISCH TUERCA METRICO
2	3778396M1		**1**	LEVER	LEVIER LEVA	HEBEL PALANCA
3	3712976M2		**1**	HANDLE	POIGNEE MANIGLIA	HANDGRIFF MANETA
4	3778397M1		**2**	STOP	BUTEE STOP	ANSCHLAG PARO
5	392536X1	M6X35MM	**2**	SCREW	VIS VITE	SCHRAUBE TORNILLO
6	3778414M1		**2**	NUT SPECIAL	ECROU SPECIAL DADO SPECIALE	SPEZIALMUTTER TUERCA ESPECIAL
7	3580767M1		**2**	NUT	ECROU DADO	MUTTER TUERCA
8	339026X1		**2**	WASHER METRIC	RONDELLE METR. RONDELLA METRICO	SCHEIBE METRISCH ARANDELA METRICO
9	3778416M1		**2**	BUSH	BAGUE BOCCOLA	BUCHSE CASQUILLO
10	3778398M1		**1**	SLIPPER	GLISSIERE SCARPETTA	HEMMSCHUH DESLIZADOR
11	390971X1		**2**	WASHER METRIC	RONDELLE METR. RONDELLA METRICO	SCHEIBE METRISCH ARANDELA METRICO
12	339560X1	M6X16MM	**2**	SCREW METRIC	VIS METRIQUE VITE METRICA	SCHRAUBE METR TORNILLO METRICO
13	3010477X1		**2**	NUT METRIC	ECROU METRIQUE DADO METRICO	MUTTER METRISCH TUERCA METRICO
14	3715469M1		**1**	THRUSTER	ARRETOIR SPINGITORE	DRUCKRING PROPULSOR
15	3715467M1		**1**	WASHER	RONDELLE RONDELLA	UNTERLEGSCHEIBE ARANDELA
16	3715459M1		**1**	INDUCTIVE TAKER	CAPTEUR INDUCTIF SENSORE INDUTTIV	SENSOR GESCHWIN. CAPTADOR INDUCT.
17	3010599X1		**1**	NUT METRIC	ECROU METRIQUE DADO METRICO	MUTTER METRISCH TUERCA METRICO
18	3715471M1		**1**	SPACER	ENTRETOISE DISTANZIALE	ABSTANDSTUECK PIEZA DISTANCIA
19	3715466M1		**1**	ROD LINK	BIELLETTE BISCOTTINO	VERBINDG.STANGE VARILLA ENGANCHE
20	3715470M1		**1**	BEARING CARRIER	PALIER CUSCINETTO SUPP-	LAGER-GEHAEUSE TEJUELO
21	3010600X1	M3X16MM	**1**	SCREW METRIC	VIS METRIQUE VITE METRICA	SCHRAUBE METR TORNILLO METRICO
22	3715463M1		**1**	CLEVIS PIN	AXE PERNO D'ATTACCO	SPLINTBOLZEN BULON CILINDRICO
23	391883X1	M5X25MM	**2**	SCREW	VIS VITE	SCHRAUBE TORNILLO
24	390469X1		**2**	WASHER METRIC	RONDELLE METR. RONDELLA METRICO	SCHEIBE METRISCH ARANDELA METRICO

1-ZU37-001-A

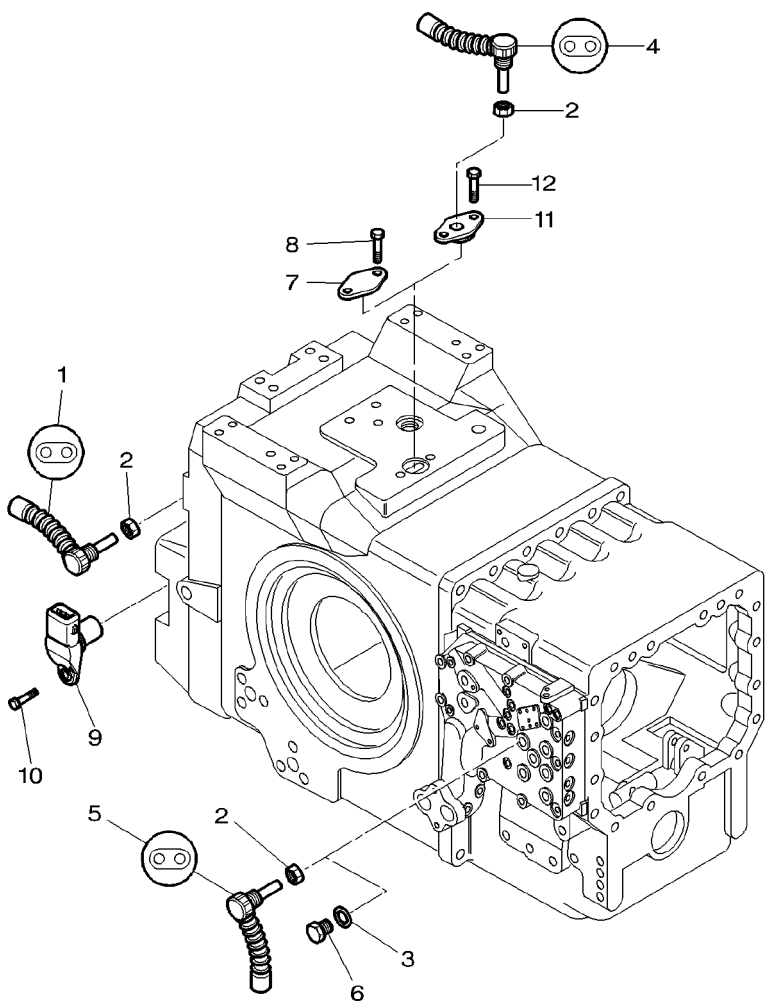

1	***3790881M1***	[F] ◀▶ 75MM	
2	339592X1	[B]	
2	339592X1	[A]	
2	339592X1	[G]	
3	390202X1	[A]	
4	***3583287M2***	[E] ◀▶ 150MM	
5	***3712058M1***	[BD] ◀▶ 70MM	
6	339494X1	[AG]	
7	3792054M1	[C]	
8	339761X1	M8x25	
9	***3716042M1***		
10	3009280X1	M6X12	
11	3716581M3		
12	339761X1	M8X25	

[A] WITH FULL POWERSHIFT
AVEC FULL POWERSHIFT
MIT FULL POWERSHIFT
CON FULL POWERSHIFT
CON FULL POWERSHIFT

[B] WITH DYNASHIFT
AVEC DYNASHIFT
MIT DYNASHIFT
CON DYNASHIFT
CON DYNASHIFT

[C] WITHOUT DATATRONIC
SANS DATATRONIC
OHNE DATATRONIC
SENZA DATATRONIC
SIN DATATRONIC

[D] MOTOR SPEED
VITESSE MOTEUR
GESCHWINDIGKEITMOTOR
VELOCITA MOTORE
VELOCIDAD MOTOR

1	INDUCTIVE TAKER	CAPTEUR INDUCTIF SENSORE INDUTTIV	SENSOR GESCHWIN. CAPTADOR INDUCT.
3	NUT METRIC	ECROU METRIQUE DADO METRICO	MUTTER METRISCH TUERCA METRICO
2	NUT METRIC	ECROU METRIQUE DADO METRICO	MUTTER METRISCH TUERCA METRICO
1	NUT METRIC	ECROU METRIQUE DADO METRICO	MUTTER METRISCH TUERCA METRICO
1	SEAL	JOINT ETANCHEITE PARAOLIO	DICHTRING RETEN
1	INDUCTIVE TAKER	CAPTEUR INDUCTIF SENSORE INDUTTIV	SENSOR GESCHWIN. CAPTADOR INDUCT.
1	INDUCTIVE TAKER	CAPTEUR INDUCTIF SENSORE INDUTTIV	SENSOR GESCHWIN. CAPTADOR INDUCT.
1	PLUG	BOUCHON TAPPO	VERSCHL.STOPFEN TAPON
1	PLATE	PLAQUE PIASTRA	PLATTE PLATO
2	SCREW METRIC	VIS METRIQUE VITE METRICA	SCHRAUBE METR TORNILLO METRICO
1	PTO SPEED SENSOR	CAPTEUR VIT PTO SENSORE GIRI PTO	SENSOR ZAPFWDREH SENSOR VEL.TDF
1	SCREW	VIS VITE	SCHRAUBE TORNILLO
1	SUPPORT	SUPPORT SUPPORTO	LAGERUNG DISPOS.DE SOSTEN
2	SCREW METRIC	VIS METRIQUE VITE METRICA	SCHRAUBE METR TORNILLO METRICO

1-ZU37-001-A

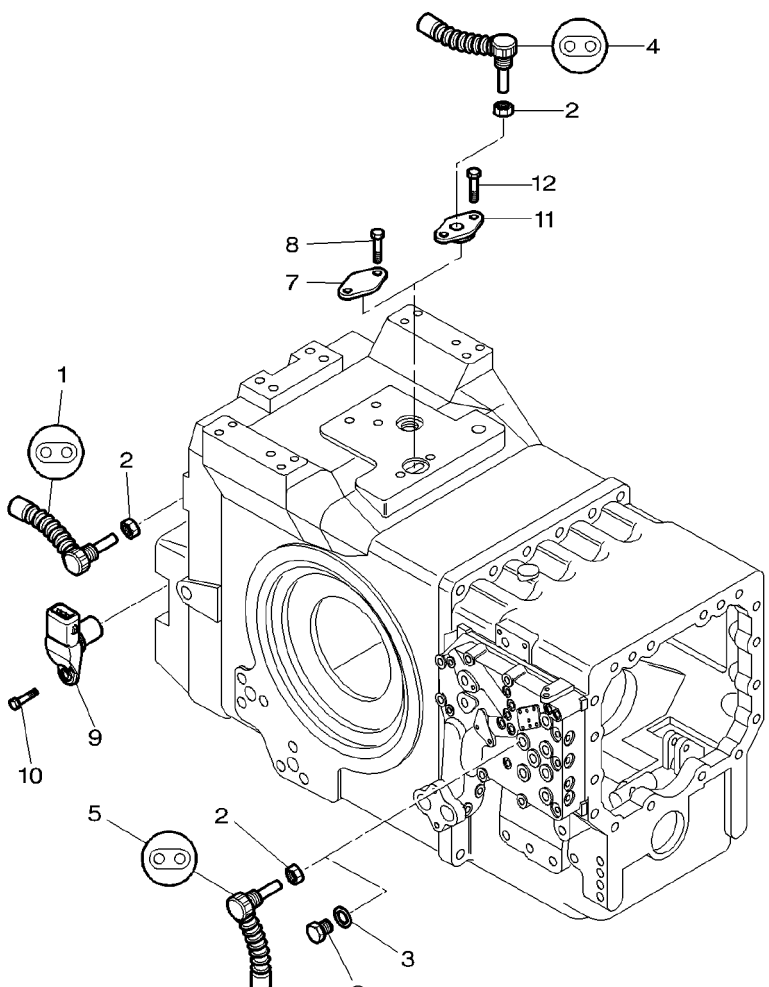

[E] TRAVELLING SPEED
VITESSE D'AVANCEMENT
FAHRGESCHWINDIGKEIT
VELOCITA D'AVANZAMENTO
VELOCDAD DE AVANCE

[F] PTO SPEED
VITESSE PTO
GESCHWINDIGKEIT PTO
VELOCITA PTO
VELOCIDAD PTO

[G] WITH KIT,BEVEL GEAR 8X43
AVEC COUPLE CONIQUE 8X43
MIT KEGELRADSATZ 8X43
CON KIT COPPIA CONIC 8X43
CON CORONA Y PINON 8X43

Platform Electronic Lift **Relevage Electronique Plateforme** **Electron Aushebg Plattform** **Sollevatore Elettronico Piattaforma** **Levante Hidraulico Plataforma**	**Main Harness** **Faisceau Principal** **Hauplkabelbaum** **Cavi Principali** **Arnes Principal**	**90-45**

1-ZP82-001-D

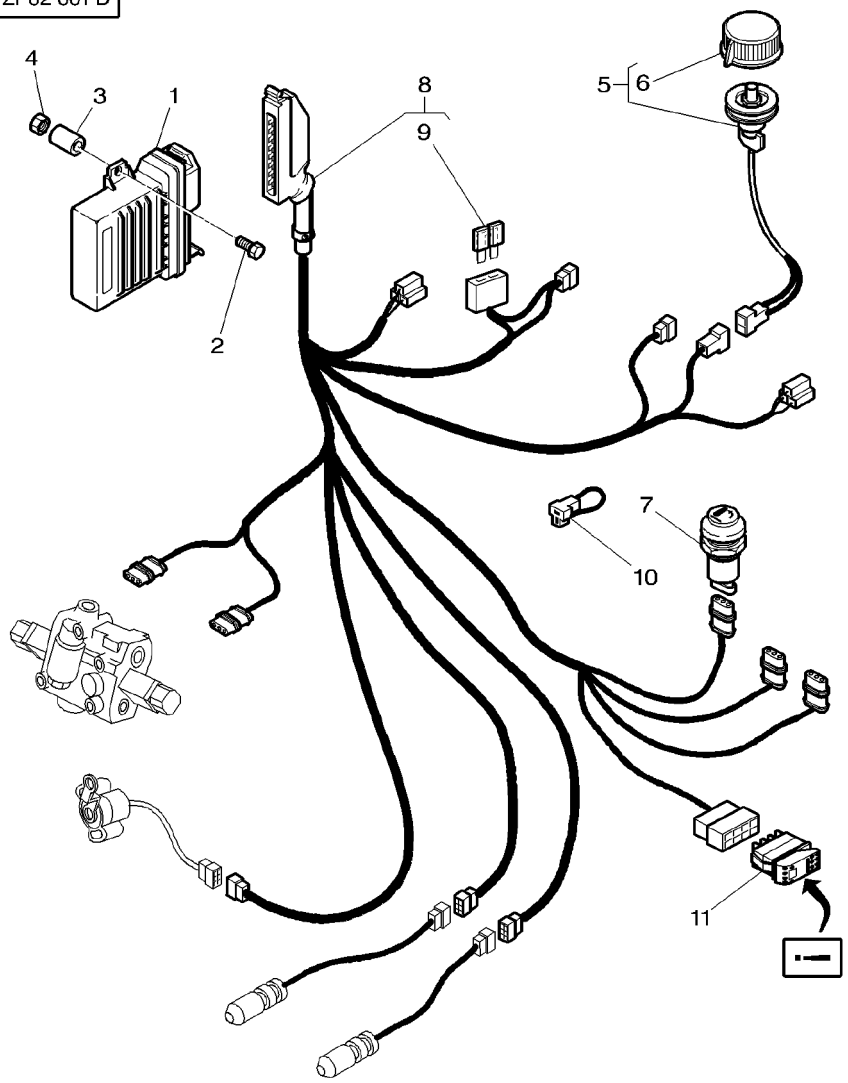

1	3779141M93		
2	339244X1	M6X55	
3	3582836M1		
4	1441500X1	M6	
5	3779478M1		
6	3902816M1	5	
7	***3714137M1***		
8	3779460M93		
9	***3387318M1***	8	5A
10	3715934M1		
10	3779572M1	[A]	
11	3812633M1		

[A] WITH POWER SHUTTLE
AVEC INVERSEUR SOUS COUPLE
MIT UNTER DREHMOMENT
CON SOTTO COPPIA
CON INVERSOR SUB PAR

1	CALCULATOR	CALCULATEUR CENTRALINA	RECHNER CALCULADORA
2	BOLT METRIC	BOULON METRIQUE BULLONE METRICO	MASCH.SCHRB MET PERNO METRICO
2	SPACER	ENTRETOISE DISTANZIALE	ABSTANDSTUECK PIEZA DISTANCIA
2	LOCKNUT	ECROU BLOCAGE AUTOBLOCCANTE	FLACHMUTTER CONTRATUERCA
1	BUTTON	BOUTON PULSANTE	KNOPFTASTE PULSADOR
1	BUTTON	BOUTON PULSANTE	KNOPFTASTE PULSADOR
1	SWITCH,INDIRECT	CONTACTEUR INTERRUTTORE IND	KONTAKTSCHALTER CONTACTOR
1	HARNESS	FAISCEAU FASCIOCAVI	KABELBAUM MAZO CABLES
1	FUSE	FUSIBLE FUSIBILE	SICHERUNG FUSIBLE
1	HARNESS	FAISCEAU FASCIOCAVI	KABELBAUM MAZO CABLES
1	CONNECTORS	CONNECTEUR MORSETTI	K.VERBINDER CONECTADORES
1	SWITCH	INTERRUPTEUR INTERRUTTORE	SCHALTER INTERRUPTOR

Aboard Computer
Ordinateur De Bord
Bord.Computer
A Pannello Computer
Computador A Bordo

90-50

1-ZU31-001-A

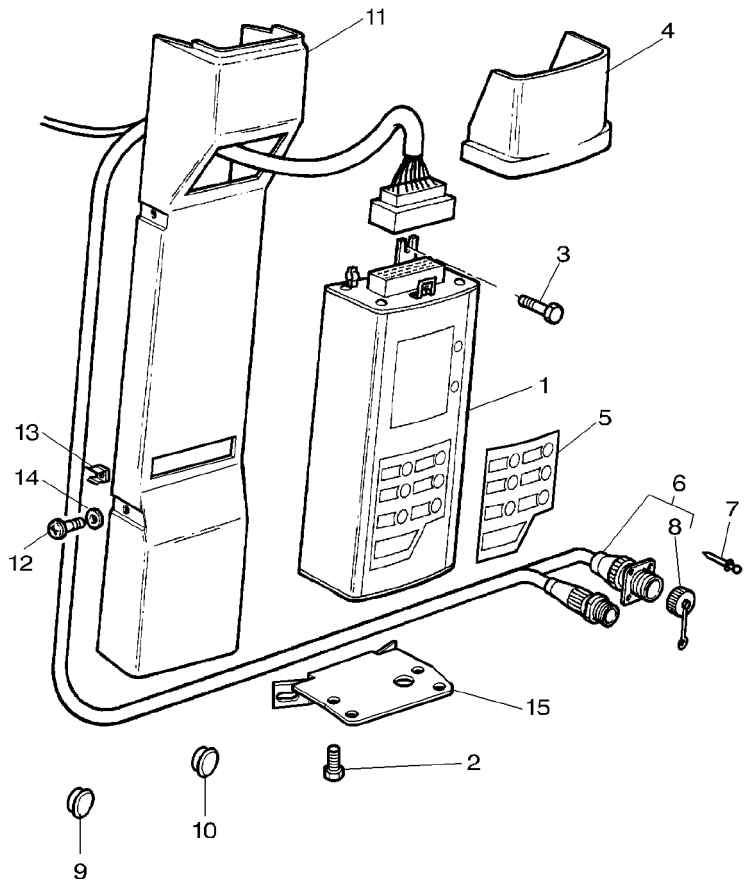

1	3792437M92		
2	3010578X1	M5X10	
3	**3010506X1**	M5X16	
4	3714916M1		
5		90−55 No 1	
6	3778701M3		
7	391349X1		
8	3900383M1	6	
9	3380422M1	[A]	
10	3042671M1	[A] ∅ 12,7MM H043028	
10	3042523M1	[A] ∅ 10MM H043029	
11	3714919M1		
11	3713072M4	[A]	
12	**3010506X1**	M5X16	
13	3615557M1		
14	1427000M1		
15	3714918M2		

[A] WITHOUT DATATRONIC
SANS DATATRONIC
OHNE DATATRONIK
SIN DATATRONIC
SENZA DATATRONIC

1	ONBOARD COMPUTOR	ORDINATEURDEBORD COMPUT.DI BORDO	EINGEB.COMPUTER ORDENADOR A BORD
2	SCREW	VIS VITE	SCHRAUBE TORNILLO
5	SCREW	VIS VITE	SCHRAUBE TORNILLO
1	MOULDING	MOULURE MODANATURA*	PRESSLING BORDON
1	DECAL	DECALCOMANIE DECALCOMANIA	AUFKLEBER CALCOMANIA
1	HARNESS	FAISCEAU FASCIOCAVI	KABELBAUM MAZO CABLES
4	RIVET	RIVET RIVETTO	NIET REMACHE
1	PLUG	BOUCHON TAPPO	VERSCHL.STOPFEN TAPON
1	PLUG	BOUCHON TAPPO	VERSCHL.STOPFEN TAPON
1	PLUG	BOUCHON TAPPO	VERSCHL.STOPFEN TAPON
1	PLUG	BOUCHON TAPPO	VERSCHL.STOPFEN TAPON
1	MOUNTING	MONTANT SUPPORTO MONTAGG	HALTERUNG MONTANTE
1	MOUNTING	MONTANT SUPPORTO MONTAGG	HALTERUNG MONTANTE
4	SCREW	VIS VITE	SCHRAUBE TORNILLO
7	BOXNUT	ECROU CAGE SET DADI	UEBERWURFMUTTER TUERCA CIEGA
4	WASHER	RONDELLE RONDELLA	UNTERLEGSCHEIBE ARANDELA
1	SUPPORT	SUPPORT SUPPORTO	LAGERUNG DISPOS.DE SOSTEN

1-ZU32-001-A

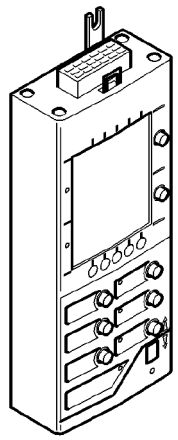

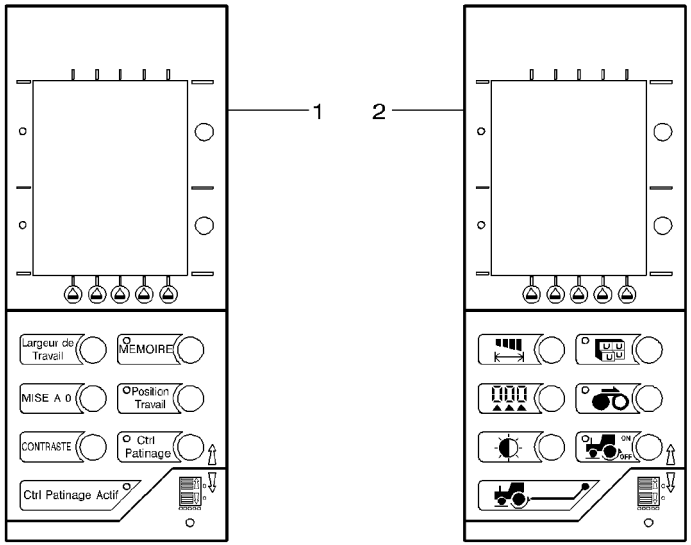

1	3714660M1	(F)	**1** DECAL	DECALCOMANIE DECALCOMANIA	AUFKLEBER CALCOMANIA
1	3714661M1	(GB)	**1** DECAL	DECALCOMANIE DECALCOMANIA	AUFKLEBER CALCOMANIA
1	3714662M1	(D)	**1** DECAL	DECALCOMANIE DECALCOMANIA	AUFKLEBER CALCOMANIA
1	3714663M1	(I)	**1** DECAL	DECALCOMANIE DECALCOMANIA	AUFKLEBER CALCOMANIA
1	3714664M1	[A]	**1** DECAL	DECALCOMANIE DECALCOMANIA	AUFKLEBER CALCOMANIA
2	3714665M1		**1** DECAL	DECALCOMANIE DECALCOMANIA	AUFKLEBER CALCOMANIA

[A] SPAIN
ESPAGNE
SPANIEN
ESPANIA
ESPANA

1-ZU35-001-A

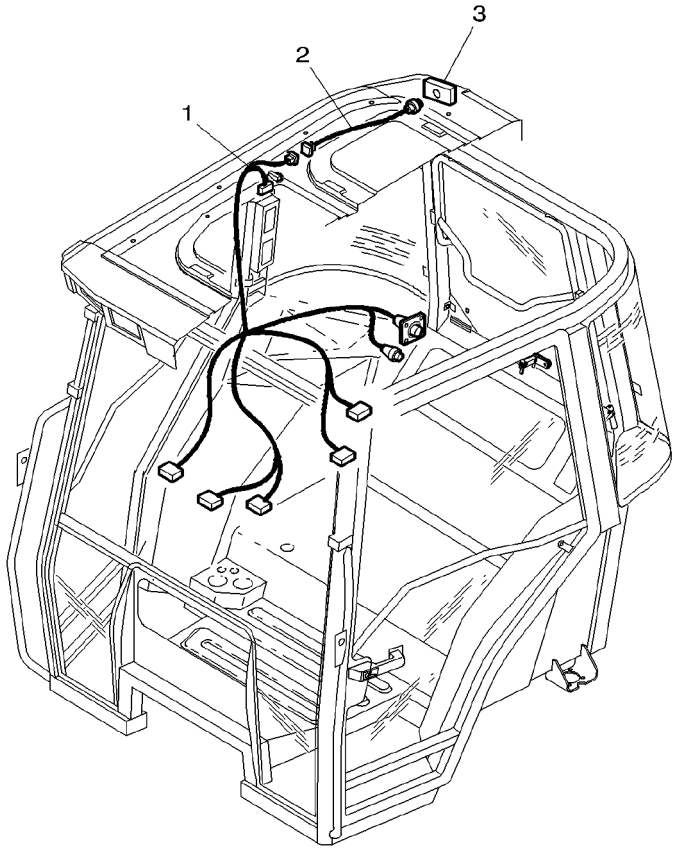

1	3778701M3	**1**	HARNESS	FAISCEAU FASCIOCAVI
2	3714262M1	**1**	HARNESS	FAISCEAU FASCIOCAVI
3	3714264M1	**1**	TRANSMITTER	TRANSMETTEUR TRASMETTITORE

KABELBAUM MAZO CABLES
KABELBAUM MAZO CABLES
UEBERTRAGER TRANSMISOR

1-ZU34-002-A

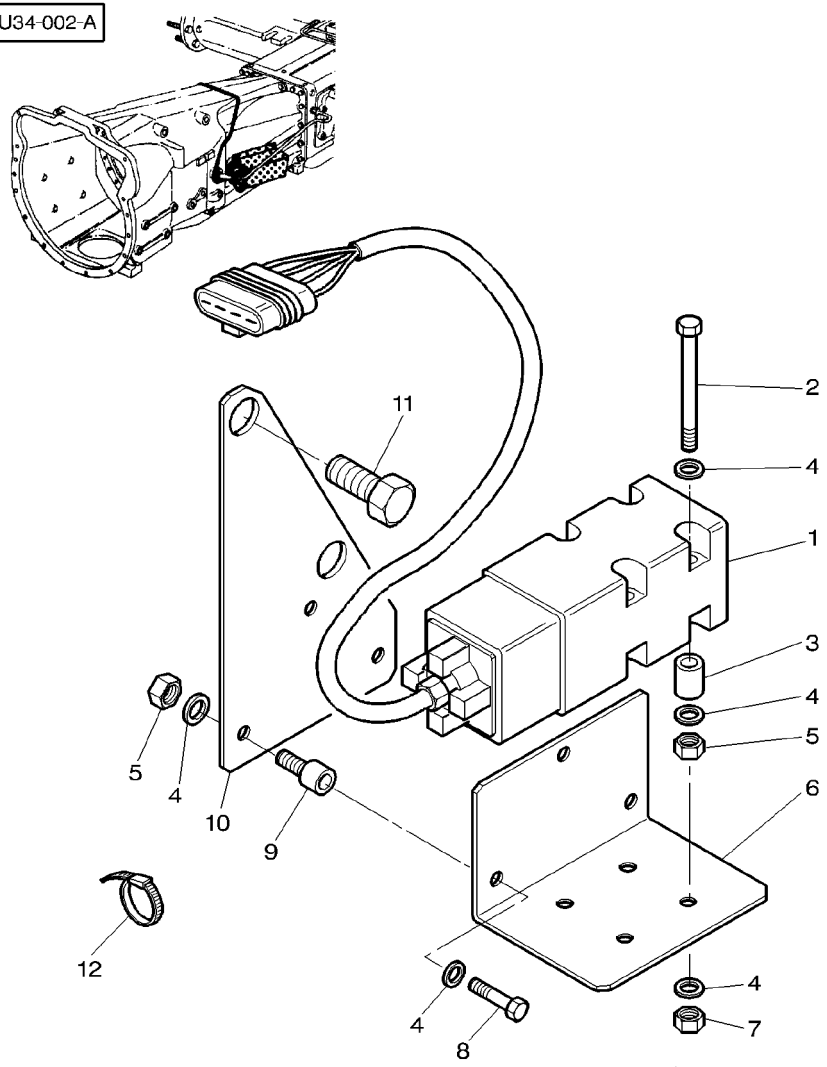

1	3714291M2	GHZ 24.125	**1**	SPEED DETECTOR	DETECTEURVITESSE RILEV.VELOCITA'	GESCHW.-ANZEIGER DETECTOR VELOC.
1	3714290M2	(GB) GHZ 24.300	**1**	SPEED DETECTOR	DETECTEURVITESSE RILEV.VELOCITA'	GESCHW.-ANZEIGER DETECTOR VELOC.
2	3019894X1	M6X100	**4**	SCREW	VIS VITE	SCHRAUBE TORNILLO
3	3582802M1		**4**	SPACER	ENTRETOISE DISTANZIALE	ABSTANDSTUECK PIEZA DISTANCIA
4	390971X1		**X**	WASHER METRIC	RONDELLE METR. RONDELLA METRICO	SCHEIBE METRISCH ARANDELA METRICO
5	1440207X1	M6	**4**	NUT METRIC	ECROU METRIQUE DADO METRICO	MUTTER METRISCH TUERCA METRICO
6	3781310M1		**1**	SUPPORT	SUPPORT SUPPORTO	LAGERUNG DISPOS.DE SOSTEN
7	339030X1		**4**	NUT METRIC	ECROU METRIQUE DADO METRICO	MUTTER METRISCH TUERCA METRICO
8	339230X1	M6X10	**3**	SCREW METRIC	VIS METRIQUE VITE METRICA	SCHRAUBE METR TORNILLO METRICO
9	3583548M1		**3**	DOWEL	PLOT SPINA	ZYLINDERSTIFT CENTRAJE
10	3781309M1		**1**	SUPPORT	SUPPORT SUPPORTO	LAGERUNG DISPOS.DE SOSTEN
11	354704X1	3/4-10X32	**2**	SCREW UNC	VIS UNC VITE UNC	SCHRAUBE UNC TORNILLO UNC
12	3619622M1		**X**	CABLE TIE	ATTACHE CABLE FASCETTA CAVI	KABELBINDER ENLACE DE CABLE

1-ZU34-003-A

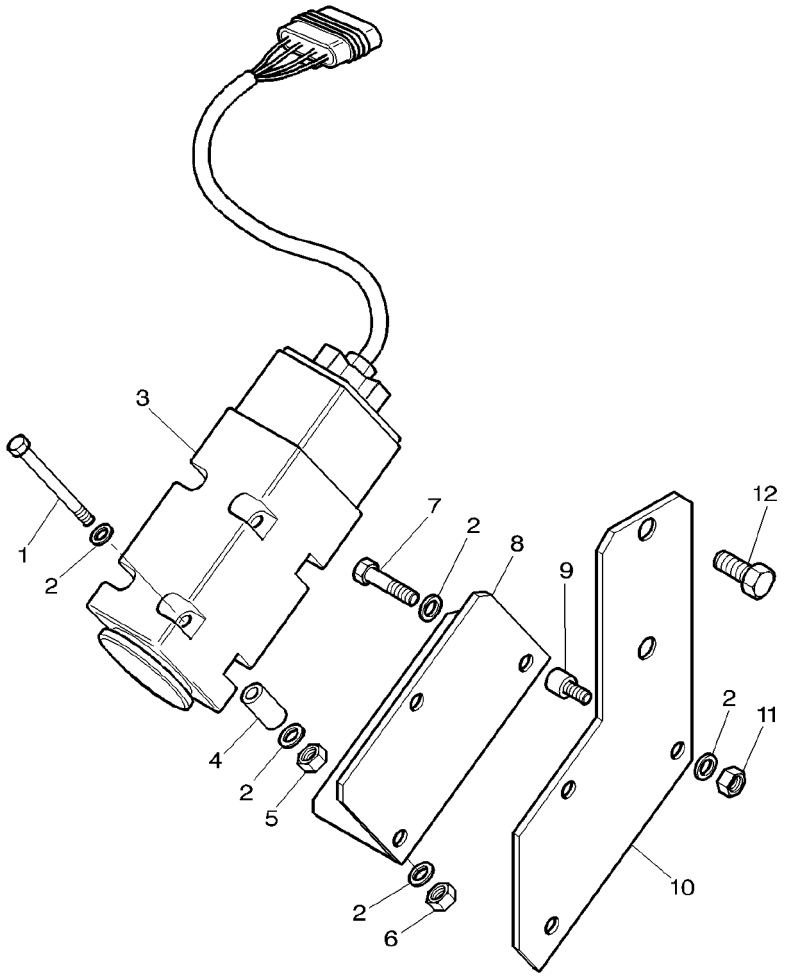

1	3019894X1	M6X100	**4**	SCREW	VIS VITE	SCHRAUBE TORNILLO
2	390971X1		**X**	WASHER METRIC	RONDELLE METR. RONDELLA METRICO	SCHEIBE METRISCH ARANDELA METRICO
3	3714290M2	(GB) GHZ 24.300	**1**	SPEED DETECTOR	DETECTEURVITESSE RILEV.VELOCITA'	GESCHW.-ANZEIGER DETECTOR VELOC.
3	3714291M2	GHZ 24.125	**1**	SPEED DETECTOR	DETECTEURVITESSE RILEV.VELOCITA'	GESCHW.-ANZEIGER DETECTOR VELOC.
4	3582802M1		**4**	SPACER	ENTRETOISE DISTANZIALE	ABSTANDSTUECK PIEZA DISTANCIA
5	1440207X1		**4**	NUT METRIC	ECROU METRIQUE DADO METRICO	MUTTER METRISCH TUERCA METRICO
6	339030X1		**4**	NUT METRIC	ECROU METRIQUE DADO METRICO	MUTTER METRISCH TUERCA METRICO
7	339230X1	M6X10	**3**	SCREW METRIC	VIS METRIQUE VITE METRICA	SCHRAUBE METR TORNILLO METRICO
8	3781310M1		**1**	SUPPORT	SUPPORT SUPPORTO	LAGERUNG DISPOS.DE SOSTEN
9	3583548M1		**3**	DOWEL	PLOT SPINA	ZYLINDERSTIFT CENTRAJE
10	3781315M1		**1**	SUPPORT	SUPPORT SUPPORTO	LAGERUNG DISPOS.DE SOSTEN
11	339030X1		**3**	NUT METRIC	ECROU METRIQUE DADO METRICO	MUTTER METRISCH TUERCA METRICO
12	339613X1	M16X25	**2**	SCREW	VIS VITE	SCHRAUBE TORNILLO

Control Box	Cab
Boite De Controle	Cabine
Steuergeraet	Kabine
Scatola Controllo	Cabina
Caja De Control	Cabina

90-75

With Dynashift
Avec Dynashift
Mit Dynashift
Con Dynashift
Con Dynashift

1-ZU36-001-A

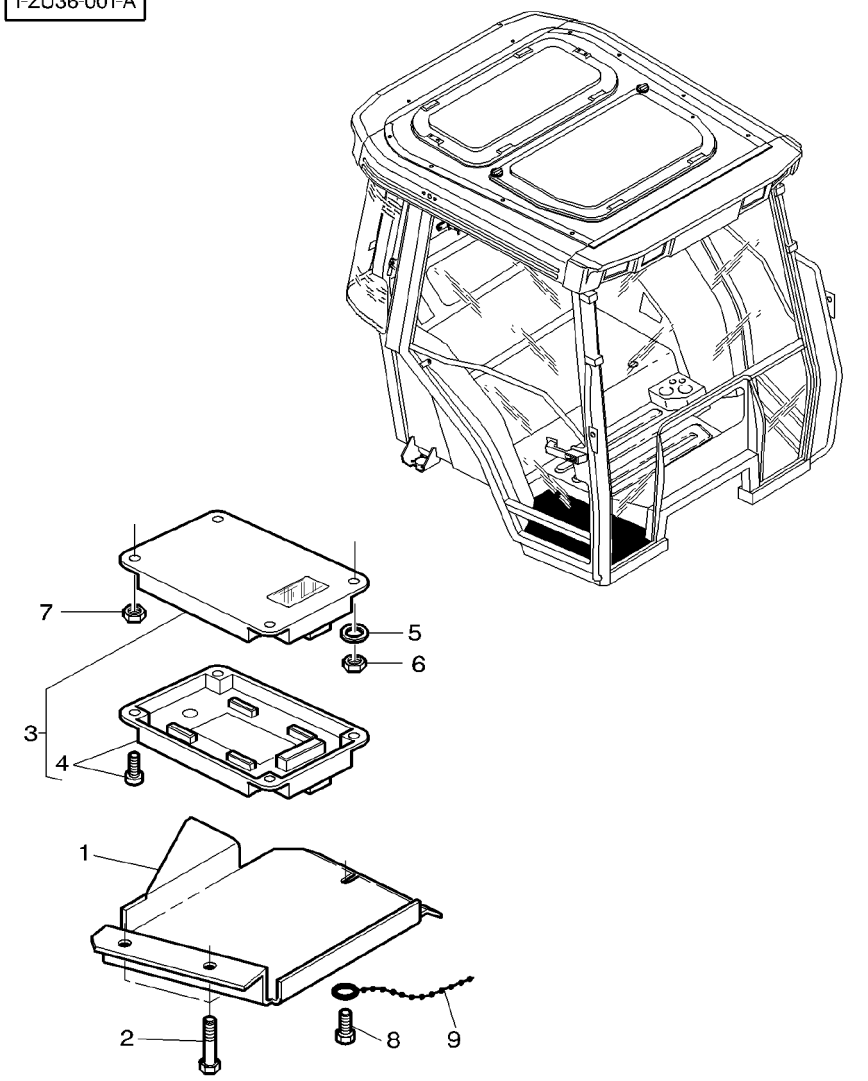

1	3782614M3		
2	391074X1	M6X12	
2	391074X1	[A] Ⓓ	
3	3792094M1		
4	3903181M91	3	
5	391038X1	∅ 6-18X1,5	
5	339375X1		
6	339030X1	M6 ⧗ 5MM	
6	1440207X1	M6	
7	3010477X1	M5	
8	1442674X1	Ⓓ	
9	3618653M1	Ⓓ	

[A] WITH SAFETY WIRE BLOKING
AVEC FIL DE SECURITE
MIT DRAHTSICHERHEIT
CON FILO DE FERRO DE SICUREZZA
CON HILO DE SECURITAD

1	COVER	COUVERCLE COPERCHIO	DECKEL CUBIERTA
3	SCREW METRIC	VIS METRIQUE VITE METRICA	SCHRAUBE METR TORNILLO METRICO
2	SCREW METRIC	VIS METRIQUE VITE METRICA	SCHRAUBE METR TORNILLO METRICO
1	SWITCH BOX	BOITE CDE ELECTR SCATOLA INTERRUT	SCHALTKASTEN CAJA DE INTERRUP
1	CASE ASSY	BOITIER CARCASSA COMPLET	GEHAEUSE KPL CAJA COMPLETA
1	WASHER METRIC	RONDELLE METR. RONDELLA METRICO	SCHEIBE METRISCH ARANDELA METRICO
1	LOCK WASHER	RONDELLE FREIN ROSETTA ELASTICA	FEDERRING ARANDELA GROWER
1	NUT METRIC	ECROU METRIQUE DADO METRICO	MUTTER METRISCH TUERCA METRICO
1	NUT METRIC	ECROU METRIQUE DADO METRICO	MUTTER METRISCH TUERCA METRICO
3	NUT METRIC	ECROU METRIQUE DADO METRICO	MUTTER METRISCH TUERCA METRICO
1	SCREW	VIS VITE	SCHRAUBE TORNILLO
1	WIRE	FIL FILO DI FERRO	DRAHT HILO

Control Box	Cab
Boite De Controle	Cabine
Steuergeraet	Kabine
Scatola Controllo	Cabina
Caja De Control	Cabina

90-80

With Power Shuttle
Avec Inverseur Sous Couple
Mit Unter Drehmoment
Con Sotto Coppia
Con Inversor Sub Par

1-ZU36-004-B

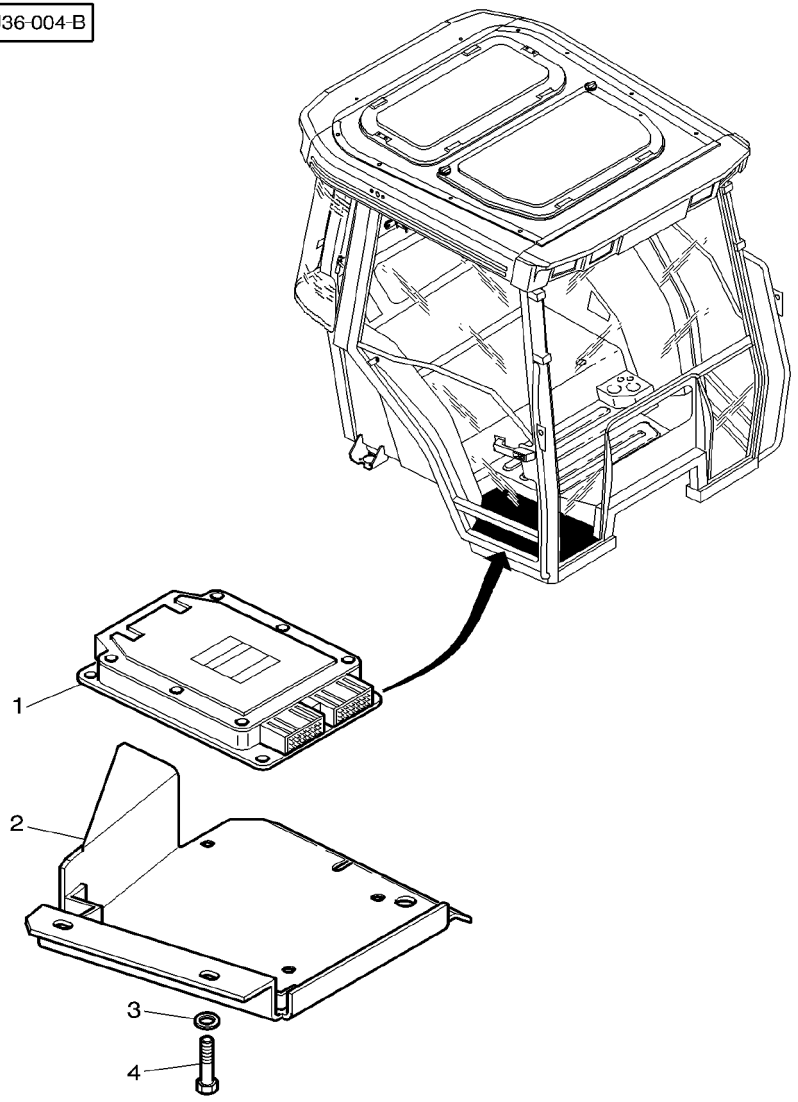

1	3791700M5		**1**	SWITCH BOX	BOITE CDE ELECTR SCATOLA INTERRUT	SCHALTKASTEN CAJA DE INTERRUP
2	3782614M3		**1**	COVER	COUVERCLE COPERCHIO	DECKEL CUBIERTA
3	391038X1		**3**	WASHER METRIC	RONDELLE METR. RONDELLA METRICO	SCHEIBE METRISCH ARANDELA METRICO
4	339560X1	M6X16	**2**	SCREW METRIC	VIS METRIQUE VITE METRICA	SCHRAUBE METR TORNILLO METRICO
4	339666X1	M6X20	**1**	SCREW METRIC	VIS METRIQUE VITE METRICA	SCHRAUBE METR TORNILLO METRICO

Control Box	Platform	90-85	With Dynashift
Boite De Controle	Plateforme		Avec Dynashift
Steuergeraet	Plattform		Mit Dynashift
Scatola Controllo	Piattaforma		Con Dynashift
Caja De Control	Plataforma		Con Dynashift

1-ZU82-001-A

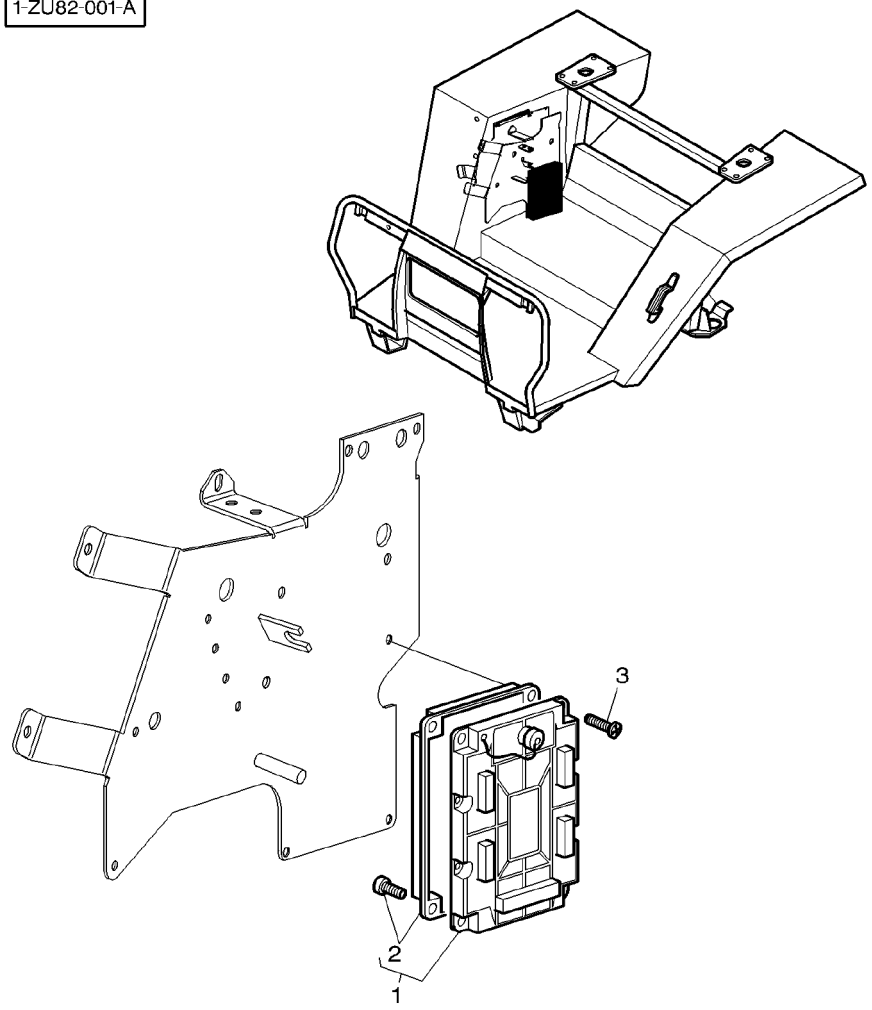

1	3792094M1		**1**	SWITCH BOX	BOITE CDE ELECTR SCATOLA INTERRUT	SCHALTKASTEN CAJA DE INTERRUP
2	3903181M91	1	**1**	CASE ASSY	BOITIER CARCASSA COMPLET	GEHAEUSE KPL CAJA COMPLETA
3	3009538X1	TCY M5X35	**4**	SCREW	VIS VITE	SCHRAUBE TORNILLO

Control Box	Cab
Boite De Controle	Cabine
Steuergeraet	Kabine
Scatola Controllo	Cabina
Caja De Control	Cabina

90-90

With Full Powershift
Avec Full Powershift
Mit Full Powershift
Con Full Powershift
Con Full Powershift

1-ZU36-002-B

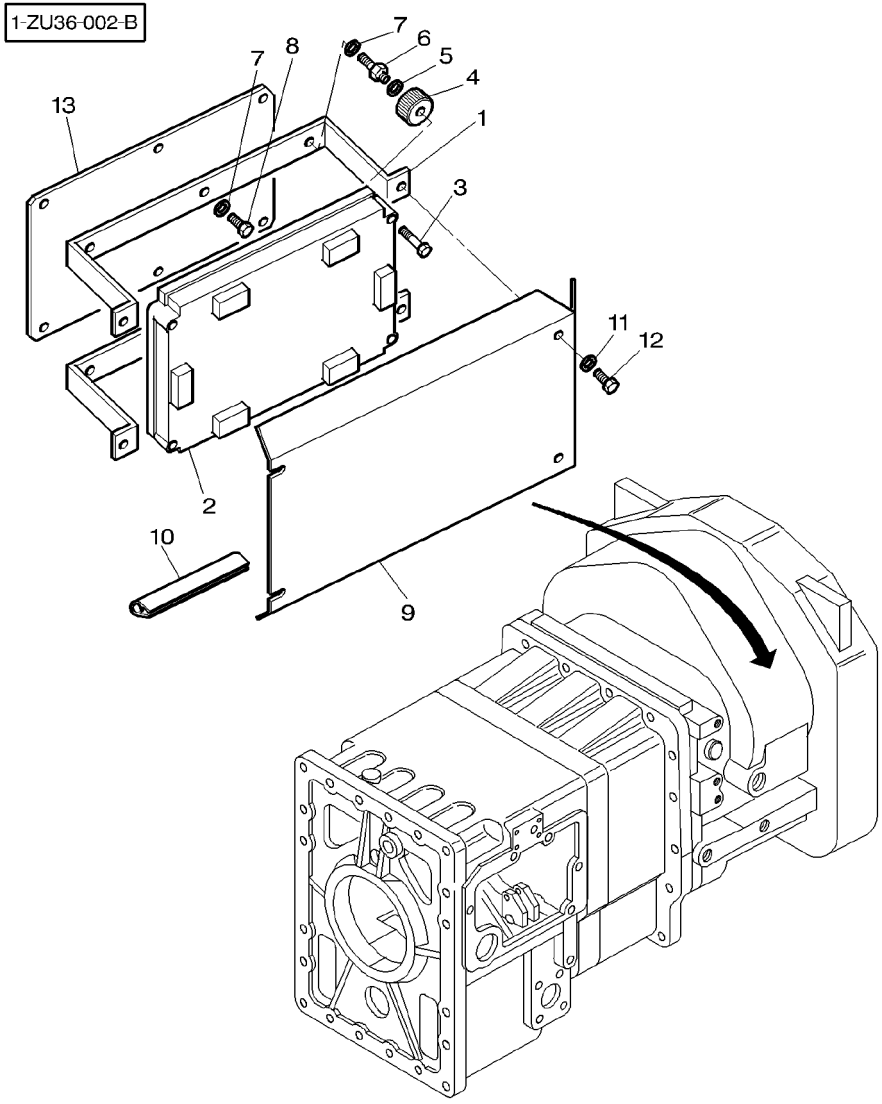

1	3790912M1		2	SUPPORT	SUPPORT SUPPORTO	LAGERUNG DISPOS.DE SOSTEN
2	3790842M1		1	SWITCH BOX	BOITE CDE ELECTR SCATOLA INTERRUT	SCHALTKASTEN CAJA DE INTERRUP
3	339096X1	M6X35	4	BOLT METRIC	BOULON METRIQUE BULLONE METRICO	MASCH.SCHRB MET PERNO METRICO
4	3790853M1		4	SUPPORT	SUPPORT SUPPORTO	LAGERUNG DISPOS.DE SOSTEN
5	391289X1		4	LOCK WASHER	RONDELLE FREIN ROSETTA ELASTICA	FEDERRING ARANDELA GROWER
6	3791098M1	M6/M8	4	SCREW	VIS VITE	SCHRAUBE TORNILLO
7	22428X		5	LOCK WASHER	RONDELLE FREIN ROSETTA ELASTICA	FEDERRING ARANDELA GROWER
8	339228X1	M8X12	1	SCREW METRIC	VIS METRIQUE VITE METRICA	SCHRAUBE METR TORNILLO METRICO
9	3790910M2		1	COWL	GARANT CAPPOTTATURA	AUFSATZ CAPERUZA
10	3580695M1		X	GASKET	JOINT GUARNIZIONE	DICHTSCHEIBE EMPAQUETADURA.
11	390972X1		2	WASHER METRIC	RONDELLE METR. RONDELLA METRICO	SCHEIBE METRISCH ARANDELA METRICO
12	339228X1	M8X12	4	SCREW METRIC	VIS METRIQUE VITE METRICA	SCHRAUBE METR TORNILLO METRICO
13	3783453M1		1	COWL	GARANT CAPPOTTATURA	AUFSATZ CAPERUZA

Electrovanes Harness / Etcu Harness−Instrument Panel	**Cab**	**90-95**	**With Dynashift**
Faisceau Electrovannes / Faisceau Etcu−Tableau De Bord	**Cabine**		**Avec Dynashift**
Elektrmagn. Kabel / Etcu Kabel−Armaturenbrett	**Kabine**		**Mit Dynashift**
Cavi Elettrovalvole / Cavi Etcu−Panello Strumenti	**Cabina**		**Con Dynashift**
Arnes De Electrovalvula / Arnes Etcu−Arnes De Instrum.	**Cabina**		**Con Dynashift**

1-ZW08-001-A

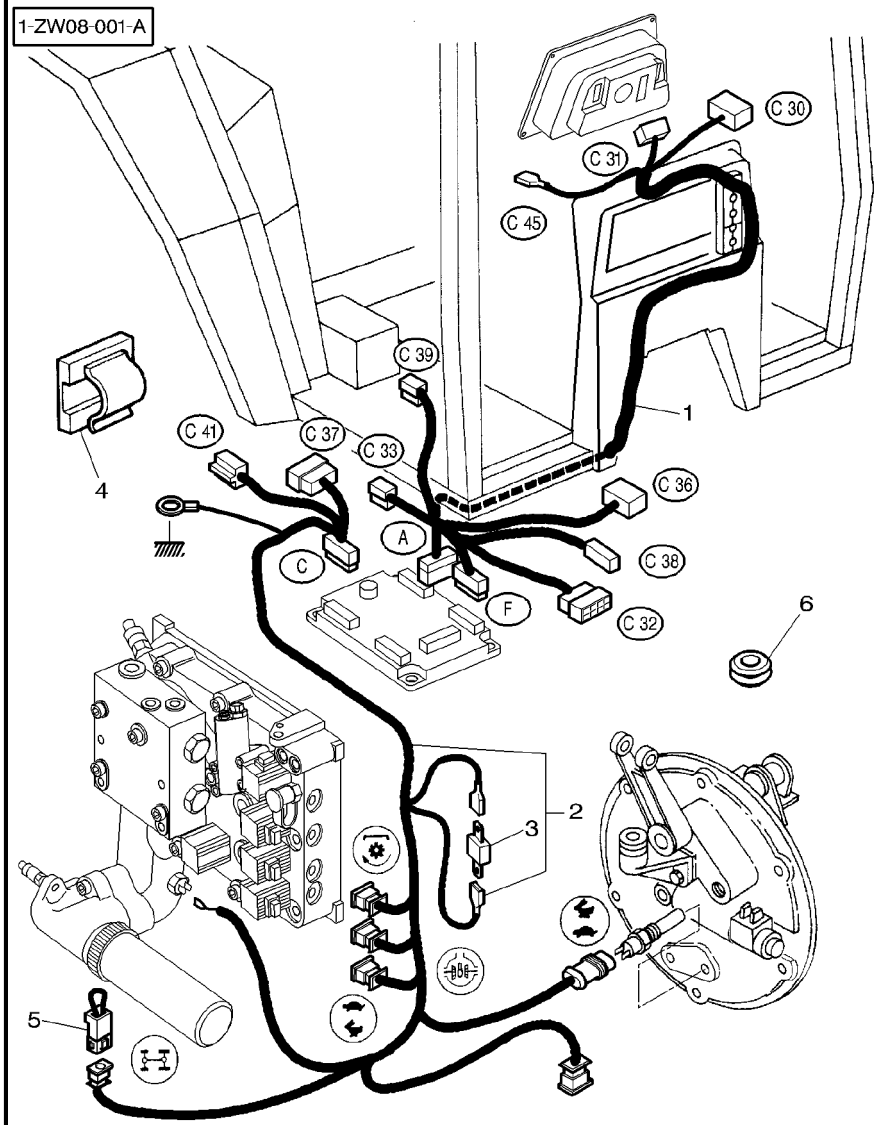

1	3778652M2		
2	3778722M93		
3	***1897312M1***	2 ∅	21/10−28
		⇔	3615548M1
4	3582094M1		
5	3779572M1	[A]	
6	3580984M1	∅	21/10−28

[A] 2 WHEEL DRIVE ONLY
2 ROUES MOTRICES SEULEMENT
HINTERRADANTRIEB NUR
DOPPIA ROUTA MOTRICE SOLO
DOS RUEDAS MOTRICES SOLAMENTE

1	HARNESS	FAISCEAU	KABELBAUM
		FASCIOCAVI	MAZO CABLES
1	HARNESS	FAISCEAU	KABELBAUM
		FASCIOCAVI	MAZO CABLES
1	DIODE	DIODE	DIODE
		DIODO	DIODO
2	TIE	ATTACHE	KUPPL.STANGE
		TRAVERSA ATTACCO	BARRA DE ENLACE
1	CONNECTORS	CONNECTEUR	K.VERBINDER
		MORSETTI	CONECTADORES
3	GROMMET	PASSE FIL	GUMMITUELLE
		GOMMINO	PASACABLE

Electrovanes Harness / Etcu Harness−Instrument Panel	**Cab**
Faisceau Electrovannes / Faisceau Etcu−Tableau De Bord	**Cabine**
Elektrmagn. Kabel / Etcu Kabel−Armaturenbrett	**Kabine**
Cavi Elettrovalvole / Cavi Etcu−Panello Strumenti	**Cabina**
Arnes De Electrovalvula / Arnes Etcu−Arnes De Instrum.	**Cabina**

90-100

With Power Shuttle / With Load Sensing
Avec Inverseur Sous Couple / Avec Load Sensing
Mit Unter Drehmoment / Mit Load Sensing
Con Sotto Coppia / Con Load Sensing
Con Inversor Sub Par / Con Load Sensing

1-ZW08-007-A

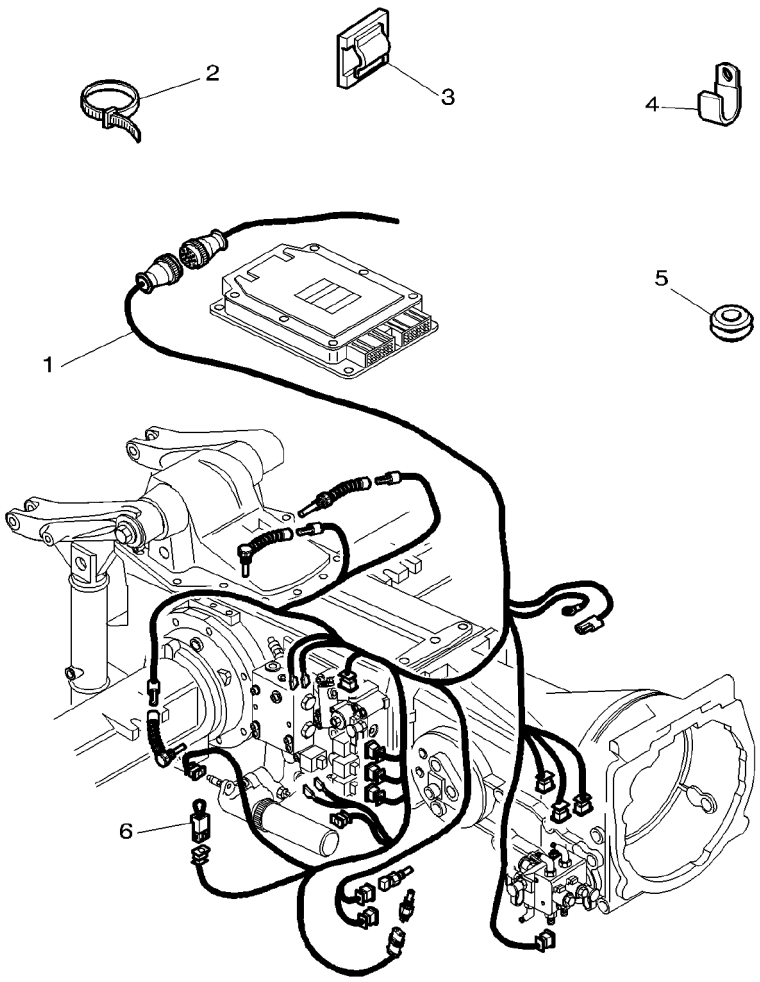

1	3793785M1		**1**	HARNESS	FAISCEAU FASCIOCAVI
2	3619622M1		**4**	CABLE TIE	ATTACHE CABLE FASCETTA CAVI
3	3582094M1		**2**	TIE	ATTACHE TRAVERSA ATTACCO
4	3583344M1		**1**	STRAP	PATTE CORREGGIA
5	3580984M1		**3**	GROMMET	PASSE FIL GOMMINO
6	3779572M1	I I	**1**	CONNECTORS	CONNECTEUR MORSETTI

KABELBAUM	MAZO CABLES	
KABELBINDER	ENLACE DE CABLE	
KUPPL.STANGE	BARRA DE ENLACE	
LASCHE	FAJA	
GUMMITUELLE	PASACABLE	
K.VERBINDER	CONECTADORES	

Electrovanes Harness / Etcu Harness−Instrument Panel	**Cab**	**90-105**
Faisceau Electrovannes / Faisceau Etcu−Tableau De Bord	**Cabine**	
Elektrmagn. Kabel / Etcu Kabel−Armaturenbrett	**Kabine**	
Cavi Elettrovalvole / Cavi Etcu−Pannello Strumenti	**Cabina**	
Arnes De Electrovalvula / Arnes Etcu−Arnes De Instrum.	**Cabina**	

With Power Shuttle
Avec Inverseur Sous Couple
Mit Unter Drehmoment
Con Sotto Coppia
Con Inversor Sub Par

1-ZW08-004-B

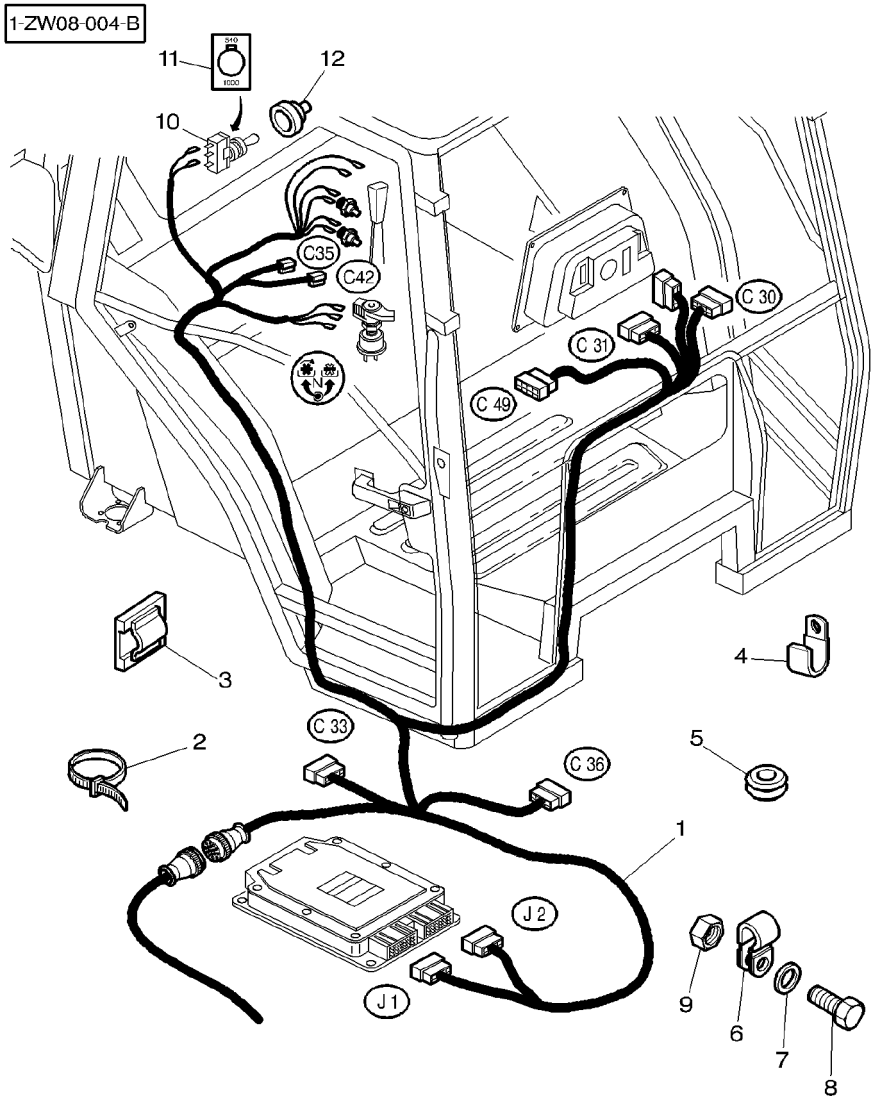

1	3779849M4		**1**	HARNESS	FAISCEAU FASCIOCAVI MAZO CABLES KABELBAUM
2	3619622M1		**4**	CABLE TIE	ATTACHE CABLE FASCETTA CAVI KABELBINDER ENLACE DE CABLE
3	3582094M1		**2**	TIE	ATTACHE TRAVERSA ATTACCO KUPPL.STANGE BARRA DE ENLACE
4	3583344M1		**1**	STRAP	PATTE CORREGGIA LASCHE FAJA
5	3580984M1		**3**	GROMMET	PASSE FIL GOMMINO GUMMITUELLE PASACABLE
6	3779547M1		**1**	CLAMP	COLLIER FASCETTA HALTESCHELLE ABRAZADERA
7	390972X1		**1**	WASHER METRIC	RONDELLE METR. RONDELLA METRICO SCHEIBE METRISCH ARANDELA METRICO
8	339337X1		**1**	SCREW METRIC	VIS METRIQUE VITE METRICA SCHRAUBE METR TORNILLO METRICO
9	339169X1		**1**	NUT METRIC	ECROU METRIQUE DADO METRICO MUTTER METRISCH TUERCA METRICO
10	***3713348M1***		**1**	SWITCH,INDIRECT	CONTACTEUR INTERRUTTORE IND KONTAKTSCHALTER CONTACTOR
11	3714886M1	540/1000 RPM	**1**	DECAL	DECALCOMANIE DECALCOMANIA AUFKLEBER CALCOMANIA
11	3713782M2	750/1000 RPM	**1**	DECAL	DECALCOMANIE DECALCOMANIA AUFKLEBER CALCOMANIA
12	3713349M1		**1**	HELMET	CAPUCHON CASCO SCHUTZHELM CASCO

Electrovanes Harness / Etcu Harness−Instrument Panel	**Platform**	**90-110**	**With Dynashift**
Faisceau Electrovannes / Faisceau Etcu−Tableau De Bord	**Plateforme**		**Avec Dynashift**
Elektrmagn. Kabel / Etcu Kabel−Armaturenbrett	**Plattform**		**Mit Dynashift**
Cavi Elettrovalvole / Cavi Etcu−Panello Strumenti	**Piattaforma**		**Con Dynashift**
Arnes De Electrovalvula / Arnes Etcu−Arnes De Instrum.	**Plataforma**		**Con Dynashift**

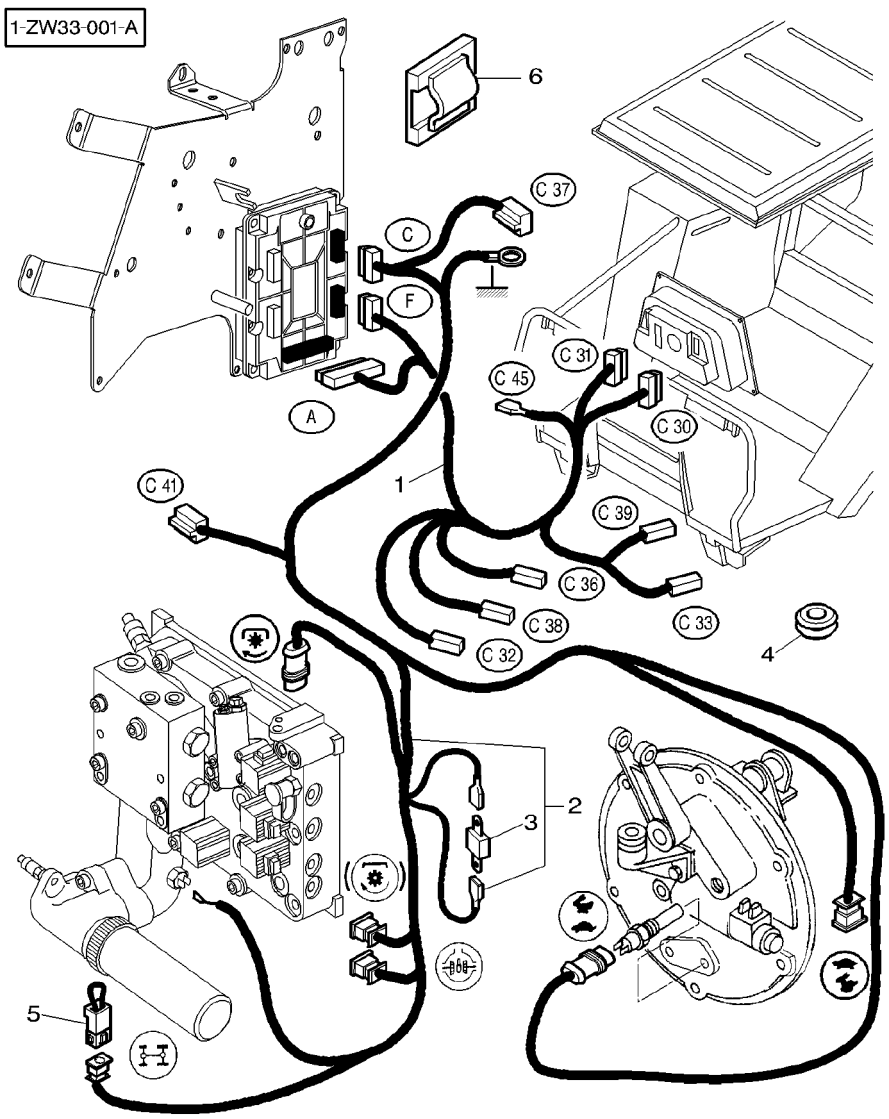

1	3777618M3			**1**	HARNESS	FAISCEAU FASCIOCAVI
2	3782620M91			**1**	HARNESS	FAISCEAU FASCIOCAVI
3	***1897312M1***	2 ⇐	3615548M1	**1**	DIODE	DIODE DIODO
4	3580984M1	∅	21/10−28	**3**	GROMMET	PASSE FIL GOMMINO
5	3779572M1	[A]		**1**	CONNECTORS	CONNECTEUR MORSETTI
6	3582094M1			**2**	TIE	ATTACHE TRAVERSA ATTACCO

KABELBAUM MAZO CABLES
KABELBAUM MAZO CABLES
DIODE DIODO
GUMMITUELLE PASACABLE
K.VERBINDER CONECTADORES
KUPPL.STANGE BARRA DE ENLACE

[A] 2 WHEEL DRIVE ONLY
2 ROUES MOTRICES SEULEMENT
HINTERRADANTRIEB NUR
DOPPIA ROUTA MOTRICE SOLO
DOS RUEDAS MOTRICES SOLAMENTE

Dynashift Harness	Cab
Faisceau Dynashift	Cabine
Kabeldynashift	Kabine
Cavi Dynashift	Cabine
Arnes Dynashift	Cabine

90-115

1-ZW35-001-B

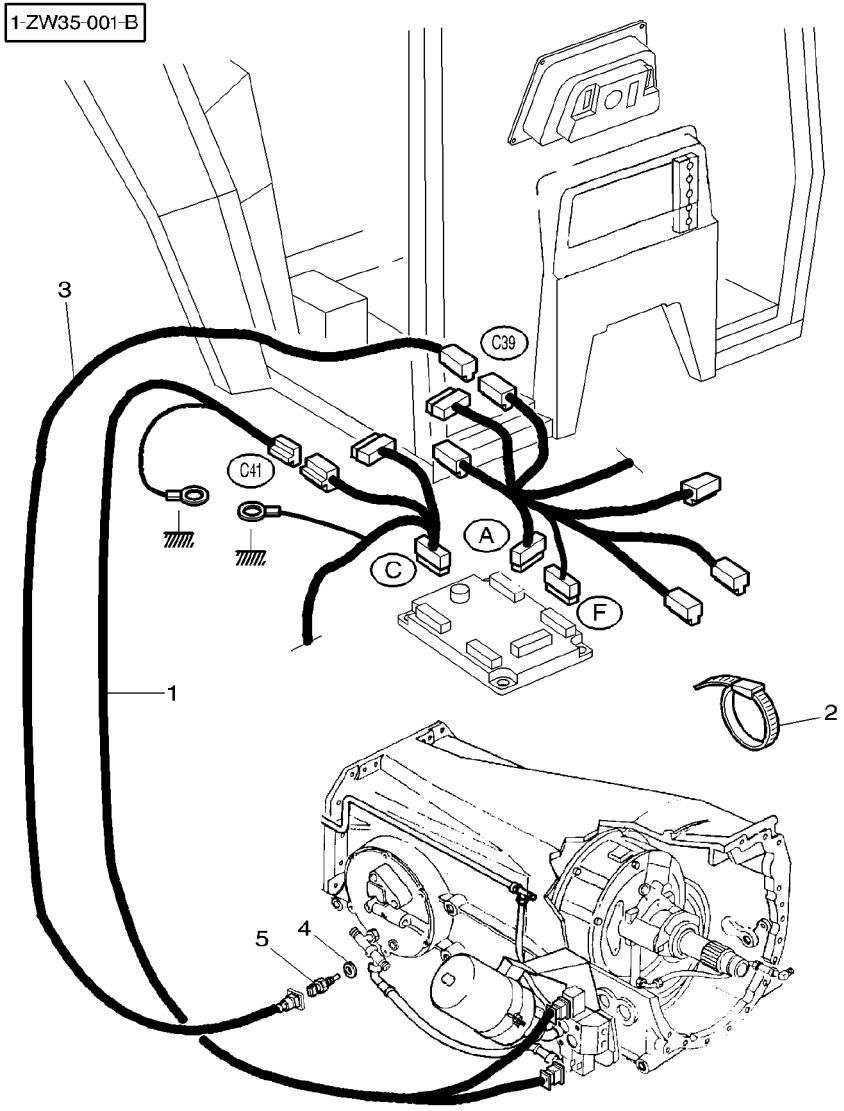

1	3713121M1		**1**	HARNESS	FAISCEAU FASCIOCAVI KABELBAUM MAZO CABLES
2	3619622M1		**X**	CABLE TIE	ATTACHE CABLE FASCETTA CAVI KABELBINDER ENLACE DE CABLE
3	3618603M1	[A]	**1**	HARNESS	FAISCEAU FASCIOCAVI KABELBAUM MAZO CABLES
4	1440012X1		**1**	GASKET	JOINT GUARNIZIONE DICHTSCHEIBE EMPAQUETADURA.
5	***3618249M1***		**1**	INDUCTIVE TAKER	CAPTEUR INDUCTIF SENSORE INDUTTIV SENSOR GESCHWIN. CAPTADOR INDUCT.

[A] HEAT SENSOR HARNESS
FAISCEAU CAPTEUR DE TEMPERATURE
SENSORTEMPERATUR KABEL
CAVI DI TEMPERATURA
ARNES DE TEMPERATURA

Dynashift Harness	Platform	90-120	With Dynashift
Faisceau Dynashift	Plateforme		Avec Dynashift
Kabelbaum Dynashift	Plattform		Mit Dynashift
Fasciocavi Dynashift	Piattaforma		Con Dynashift
Mazo Cables Dynashift	Plataforma		Con Dynashift

1-ZU80-001-A

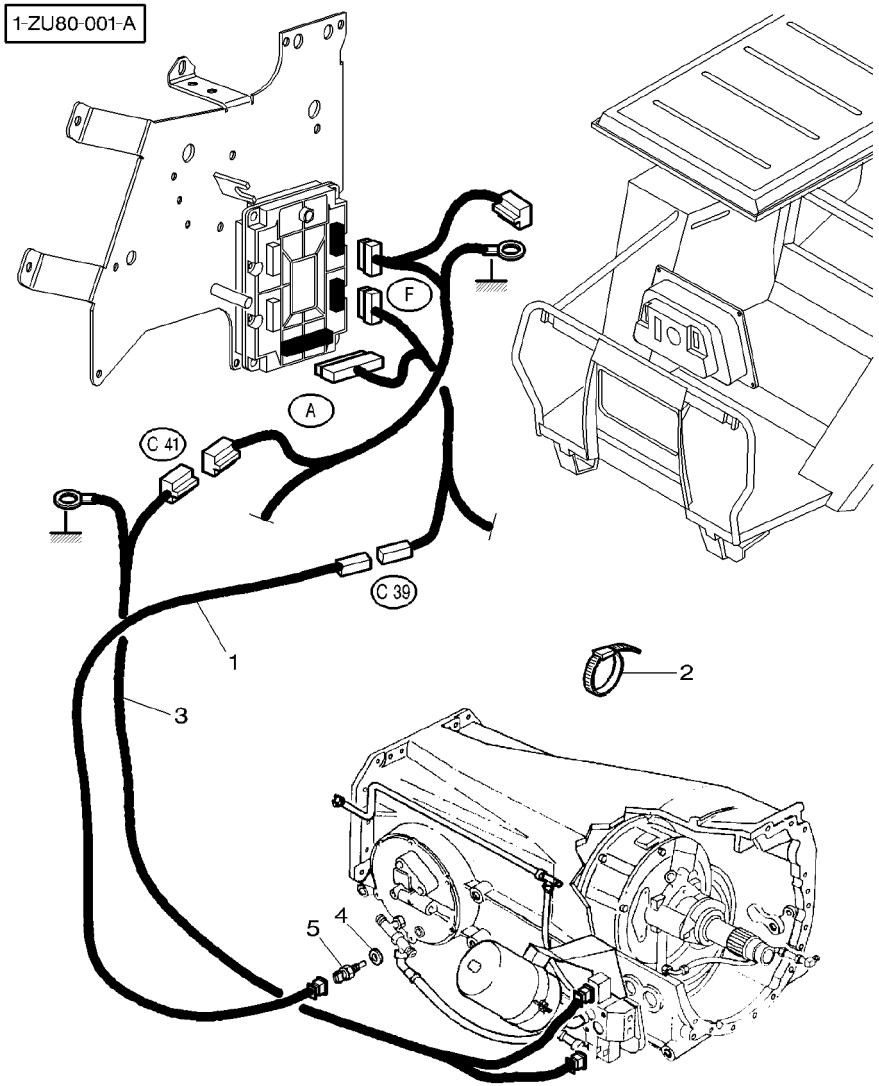

1	3618603M1	[A]	**1**	HARNESS	FAISCEAU FASCIOCAVI	KABELBAUM MAZO CABLES
2	3619622M1		**X**	CABLE TIE	ATTACHE CABLE FASCETTA CAVI	KABELBINDER ENLACE DE CABLE
3	3779128M1		**1**	HARNESS	FAISCEAU FASCIOCAVI	KABELBAUM MAZO CABLES
4	1440012X1		**1**	GASKET	JOINT GUARNIZIONE	DICHTSCHEIBE EMPAQUETADURA.
5	***3618249M1***		**1**	INDUCTIVE TAKER	CAPTEUR INDUCTIF SENSORE INDUTTIV	SENSOR GESCHWIN. CAPTADOR INDUCT.

[A] HEAT SENSOR HARNESS
FAISCEAU CAPTEUR DE TEMPERATURE
SENSORTEMPERATUR KABEL
CAVI DI TEMPERATURA
ARNES DE TEMPERATURA

Control Box Harness / Console	Cab
Faisceau Boite De Controle / Console	Cabine
Kabelsteuergeraet / Konsole	Kabine
Cavi Di Scatola Controllo / Mensola	Cabina
Arnes De Caja De Control / Consola	Cabina

90-125

With Dynashift
Avec Dynashift
Mit Dynashift
Con Dynashift
Con Dynashift

1-ZW36-001-C

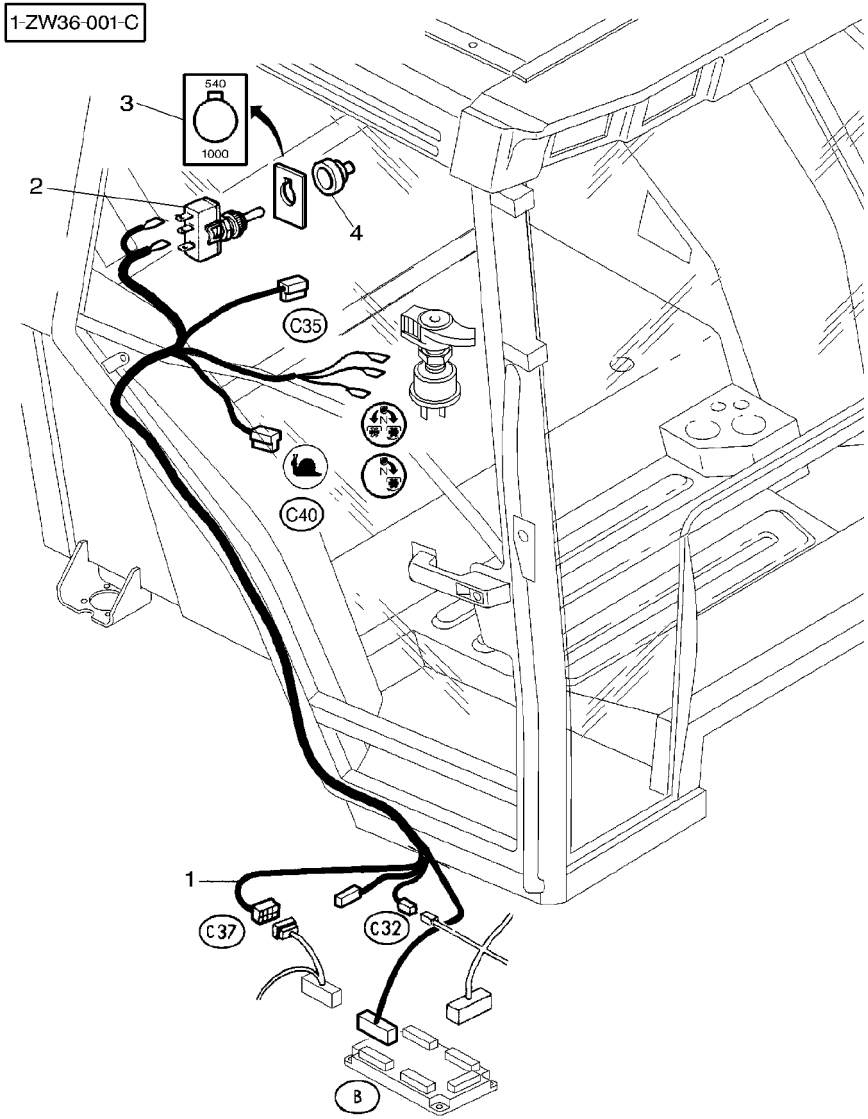

1	3779500M4		**1**	HARNESS	FAISCEAU FASCIOCAVI	KABELBAUM MAZO CABLES
2	***3713348M1***		**1**	SWITCH,INDIRECT	CONTACTEUR INTERRUTTORE IND	KONTAKTSCHALTER CONTACTOR
3	3714886M1	540/1000RPM	**1**	DECAL	DECALCOMANIE DECALCOMANIA	AUFKLEBER CALCOMANIA
3	3713782M2	750/1000RPM	**1**	DECAL	DECALCOMANIE DECALCOMANIA	AUFKLEBER CALCOMANIA
4	3713349M1		**1**	HELMET	CAPUCHON CASCO	SCHUTZHELM CASCO

Control Box Harness / Console	Platform
Faisceau Boite De Controle / Console	Plateforme
Kabelsteuergeraet / Konsole	Plattform
Cavi Di Scatola Controllo / Mensola	Piattaforma
Arnes De Caja De Control / Consola	Platforma

90-130

1-ZU81-001-B

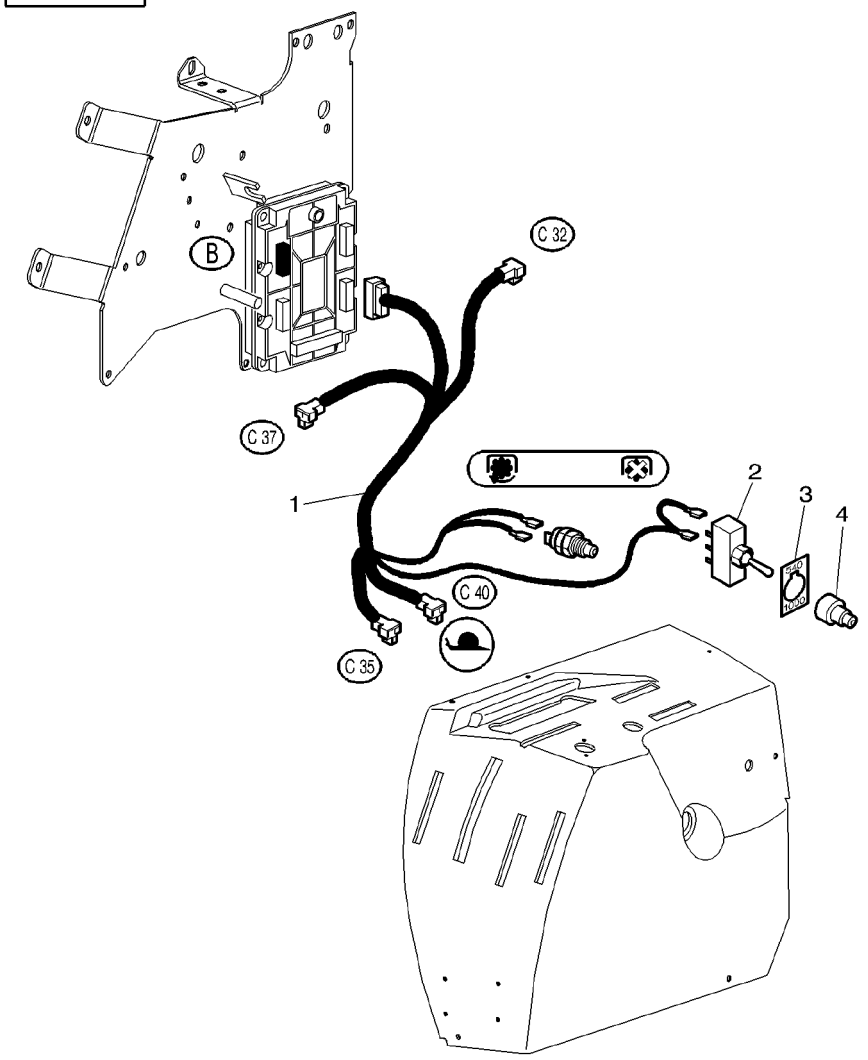

1	3713113M2	**1**	HARNESS	FAISCEAU FASCIOCAVI KABELBAUM MAZO CABLES
2	***3713348M1***	**1**	SWITCH,INDIRECT	CONTACTEUR INTERRUTTORE IND KONTAKTSCHALTER CONTACTOR
3	3714886M1	**1**	DECAL	DECALCOMANIE DECALCOMANIA AUFKLEBER CALCOMANIA
4	3713349M1	**1**	HELMET	CAPUCHON CASCO SCHUTZHELM CASCO

Sensors Harness **Faisceau Capteurs** **Sensoren−Kabel** **Cavi Sensori** **Sensores De Arnes**	**Cab** **Cabine** **Kabine** **Cabina** **Cabina**	**90-135**	**With Dynashift** **Avec Dynashift** **Mit Dynashift** **Con Dynashift** **Con Dynashift**

1-ZW07-001-A

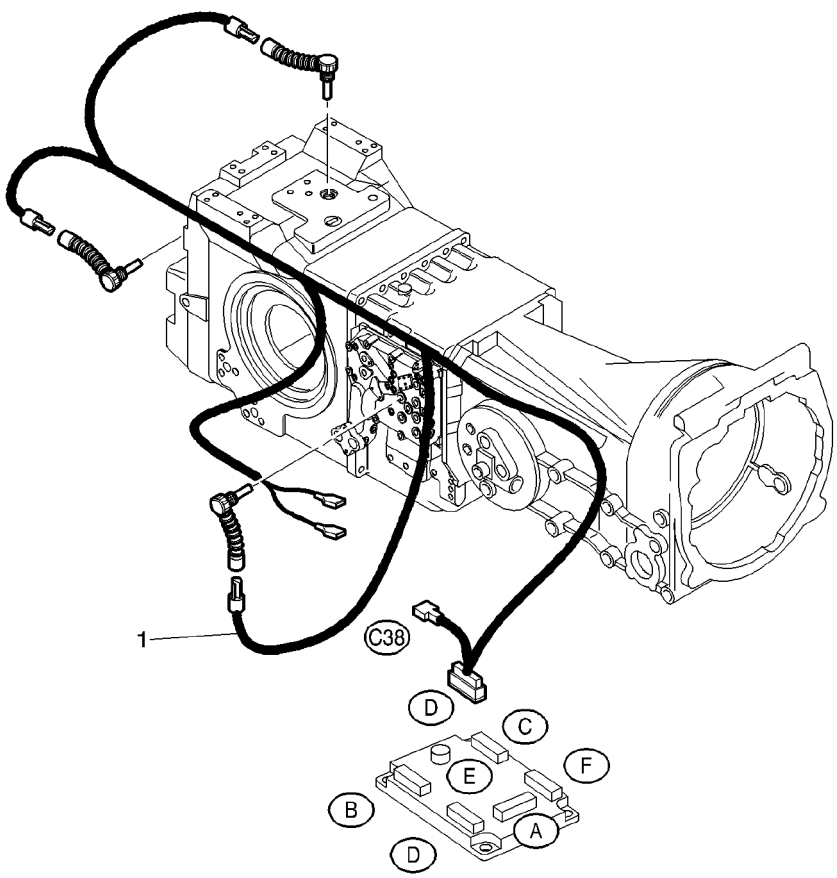

1	3618346M1	**1**	HARNESS	FAISCEAU FASCIOCAVI	KABELBAUM MAZO CABLES

Sensors Harness	Platform	90-140	With Dynashift
Faisceau Capteurs	Plateforme		Avec Dynashift
Sensoren-Kabel	Plattform		Mit Dynashift
Cavi Sensori	Piattaforma		Con Dynashift
Sensores De Arnes	Plataforma		Con Dynashift

1-ZW34-001-A

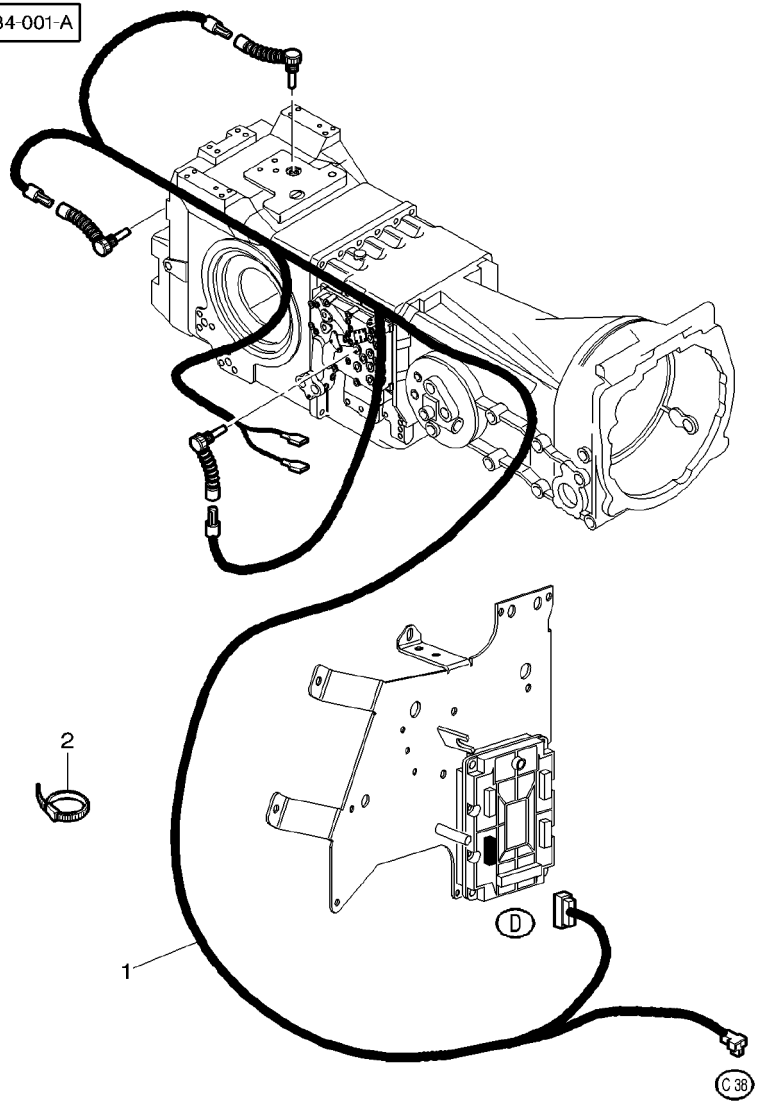

1	3777628M1	**1**	HARNESS	FAISCEAU FASCIOCAVI ATTACHE CABLE FASCETTA CAVI
2	3619622M1	**X**	CABLE TIE	KABELBAUM MAZO CABLES KABELBINDER ENLACE DE CABLE

1-ZW25-001-B

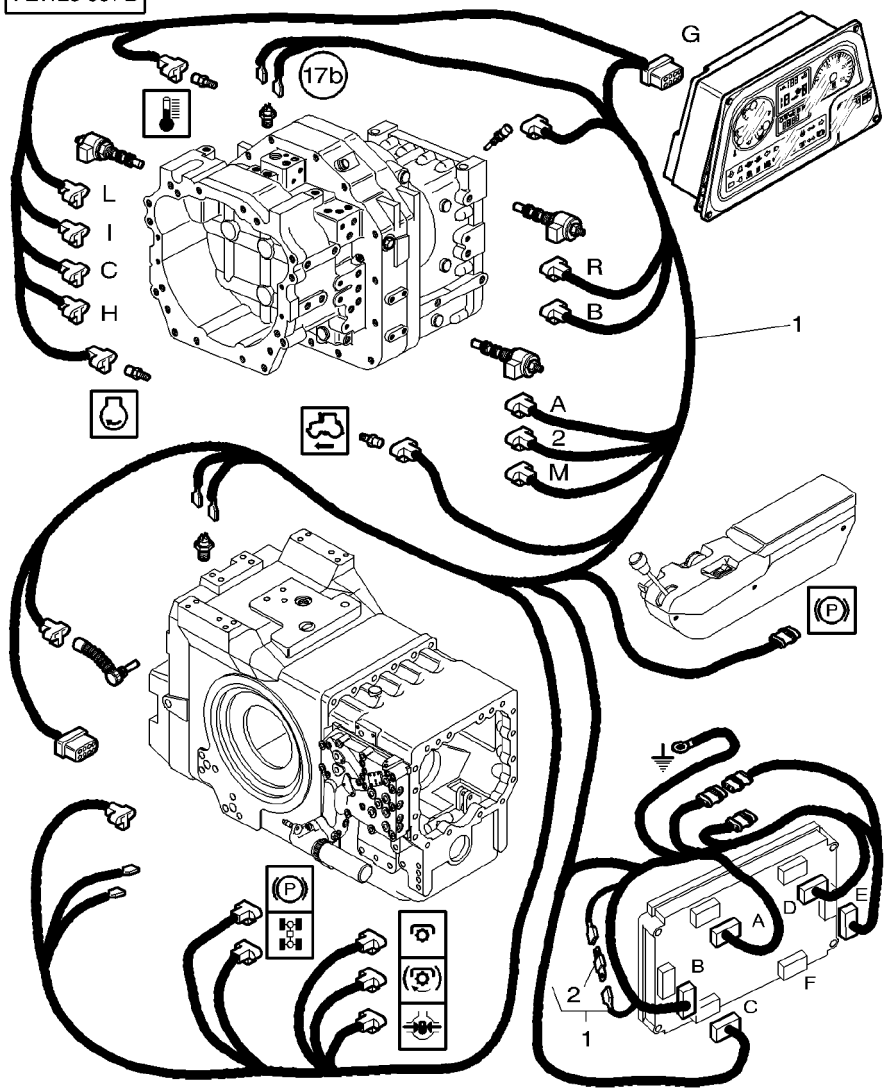

1	3790908M5	[A]	**1**	HARNESS	FAISCEAU FASCIOCAVI	KABELBAUM MAZO CABLES
1	3792504M1	[B]	**1**	HARNESS	FAISCEAU FASCIOCAVI	KABELBAUM MAZO CABLES
2	3779377M1	1 [A]	**1**	DIODE	DIODE DIODO	DIODE DIODO

[A] WITH PUMP 45CC
AVEC POMPE 45CC
MIT PUMPE 45CC
CON POMPA 45CC
CON BOMBA 45CC

[B] WITH PUMP 60CC
AVEC POMPE 60CC
MIT PUMPE 60CC
CON POMPA 60CC
CON BOMBA 60CC

1-ZW37-001-A

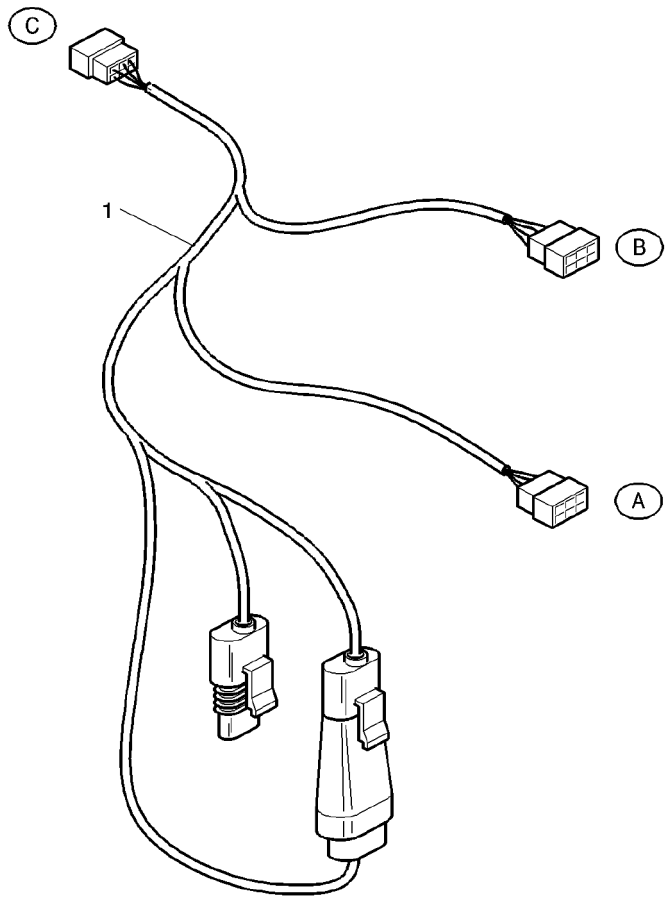

1	3791105M2	**1**	HARNESS	FAISCEAU FASCIOCAVI	KABELBAUM MAZO CABLES

Temporised Relay Park−Lock	**Full Powershift**
Relais Temporise Park−Lock	**Full Powershift**
Abwartend Verteiler Feststellbremse	**Full Powershift**
Rele Temporeggiatore Freno Di Parcheggio	**Full Powershift**
Rele Diferir Controles De Frenos	**Full Powershift**

90-155

H343026

1-ZP03-001-A

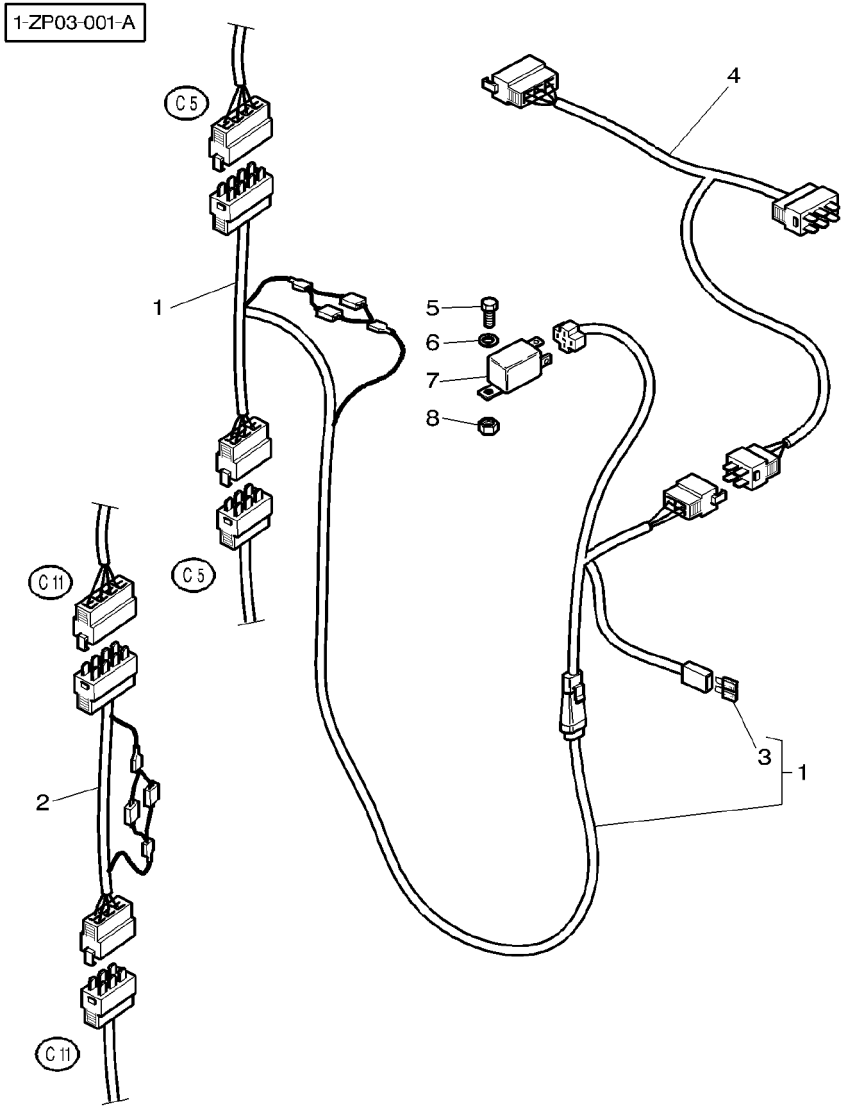

1	3783154M2		**1**	HARNESS	FAISCEAU FASCIOCAVI	KABELBAUM MAZO CABLES
2	3783662M1		**1**	HARNESS	FAISCEAU FASCIOCAVI	KABELBAUM MAZO CABLES
3	***1695966M1***	1 15 AMP	**1**	FUSE	FUSIBLE FUSIBILE	SICHERUNG FUSIBLE
4	3783153M1		**1**	HARNESS	FAISCEAU FASCIOCAVI	KABELBAUM MAZO CABLES
5	339666X1	M6X20	**1**	SCREW METRIC	VIS METRIQUE VITE METRICA	SCHRAUBE METR TORNILLO METRICO
6	391038X1	∅ 6−18	**2**	WASHER METRIC	RONDELLE METR. RONDELLA METRICO	SCHEIBE METRISCH ARANDELA METRICO
7	3783425M1	AST TIMER 48.04.06	**1**	RELAY	RELAIS RELE	RELAIS RELE
8	1441500X1	M6	**1**	LOCKNUT	ECROU BLOCAGE AUTOBLOCCANTE	FLACHMUTTER CONTRATUERCA

100

Sheet Metal	Hood
Carrosserie	Capot
Verkleidung	Motorhaube
Carrozzeria	Cofano
Emplanchados	Capo

100-5

1-ZR03-004-C

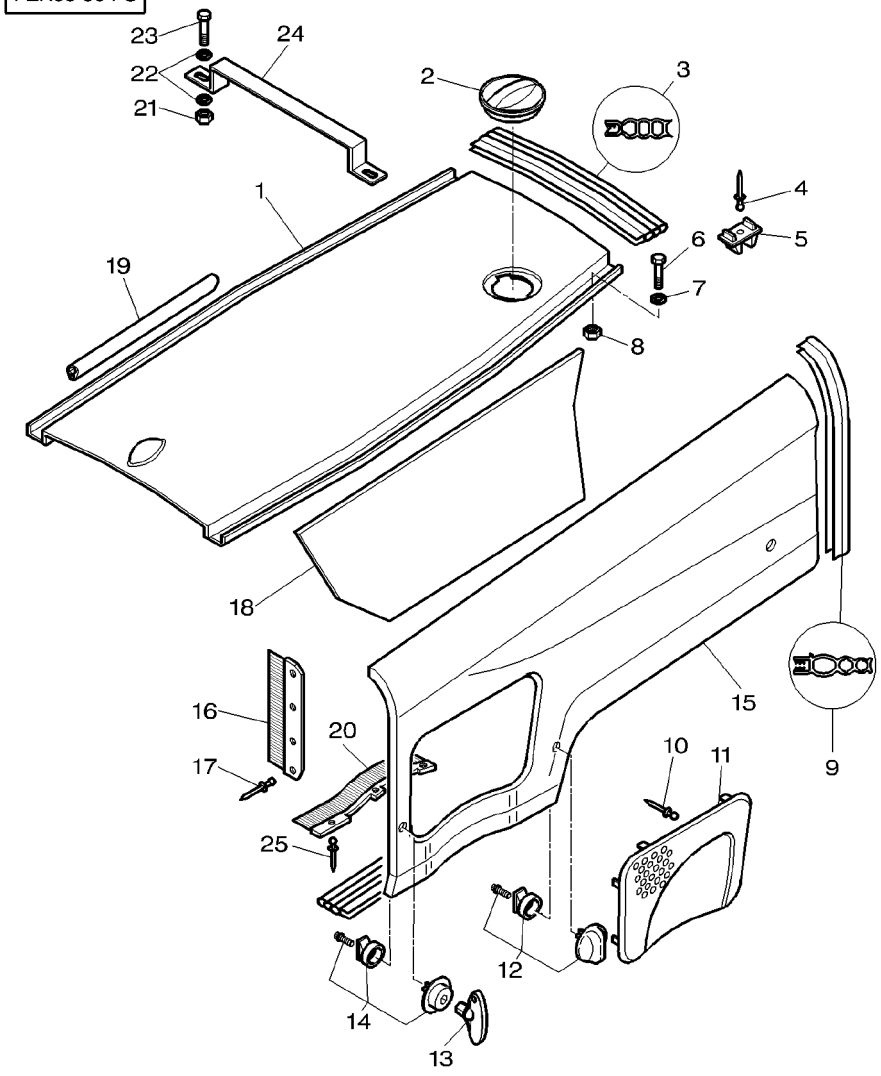

1	3780303M1		**1**	BONNET	CAPOT COFANO	MOTORHAUBE CAPOT
1	3782972M1	[A]	**1**	BONNET	CAPOT COFANO	MOTORHAUBE CAPOT
2	3800373M1		**1**	COVER	COUVERCLE COPERCHIO	DECKEL CUBIERTA
3	3782773M1	◀▶ 305MM	**1**	GASKET	JOINT GUARNIZIONE	DICHTSCHEIBE EMPAQUETADURA.
4	3010935X1		**6**	RIVET	RIVET RIVETTO	NIET REMACHE
5	3800376M1		**6**	BUFFER	BUTOIR RESPINGENTE	PUFFER PARACHOQUES
6	339129X1	M8X20	**8**	PIN	GOUPILLE PERNO	BOLZEN PASADOR
7	385361X1		**8**	WASHER METRIC	RONDELLE METR. RONDELLA METRICO	SCHEIBE METRISCH ARANDELA METRICO
8	339169X1		**8**	NUT METRIC	ECROU METRIQUE DADO METRICO	MUTTER METRISCH TUERCA METRICO
9	3782772M1	◀▶ 630MM	**2**	GASKET	JOINT GUARNIZIONE	DICHTSCHEIBE EMPAQUETADURA.
10	3819546M1		**18**	RIVET	RIVET RIVETTO	NIET REMACHE
11	3780859M2	▶	**1**	GRILLE	GRILLE GRIGLIA	GRILL REJILLA
11	3780860M2	◀	**1**	GRILLE	GRILLE GRIGLIA	GRILL REJILLA
12	3903344M91	3903345M91	**6**	LATCH	VERROU SALISCENDI	RIEGEL CERROJO
13	***3813582M1***		**1**	TOOL	OUTIL ATTREZZO	WERKZEUG HERRAMIENTA
14	3903345M91	3903344M91	**6**	LATCH	VERROU SALISCENDI	RIEGEL CERROJO
15	3780387M1	▶	**1**	PANEL	PANNEAU PANNELLO	VERKL.BLECH PANEL
15	3780388M1	◀	**1**	PANEL	PANNEAU PANNELLO	VERKL.BLECH PANEL
16	3782002M1	◀	**1**	SEAL PLATE	PLAQUE ETANCH PIATTO TENUTA	DICHTPLATTE PLACA RETENEDORA
16	3782003M1	▶	**1**	SEAL PLATE	PLAQUE ETANCH PIATTO TENUTA	DICHTPLATTE PLACA RETENEDORA
17	3010935X1		**8**	RIVET	RIVET RIVETTO	NIET REMACHE
18	3782122M1		**1**	FENCE	PROTECTION RECINTO	GITTER CERCA
19	3782493M1	◀▶ 700MM	**2**	GASKET	JOINT GUARNIZIONE	DICHTSCHEIBE EMPAQUETADURA.
20	3782000M2	◀	**1**	SEAL	JOINT ETANCHEITE PARAOLIO	DICHTRING RETEN
20	3782001M2	▶	**1**	SEAL	JOINT ETANCHEITE PARAOLIO	DICHTRING RETEN
21	339169X1		**2**	NUT METRIC	ECROU METRIQUE DADO METRICO	MUTTER METRISCH TUERCA METRICO

1-ZR03-004-C

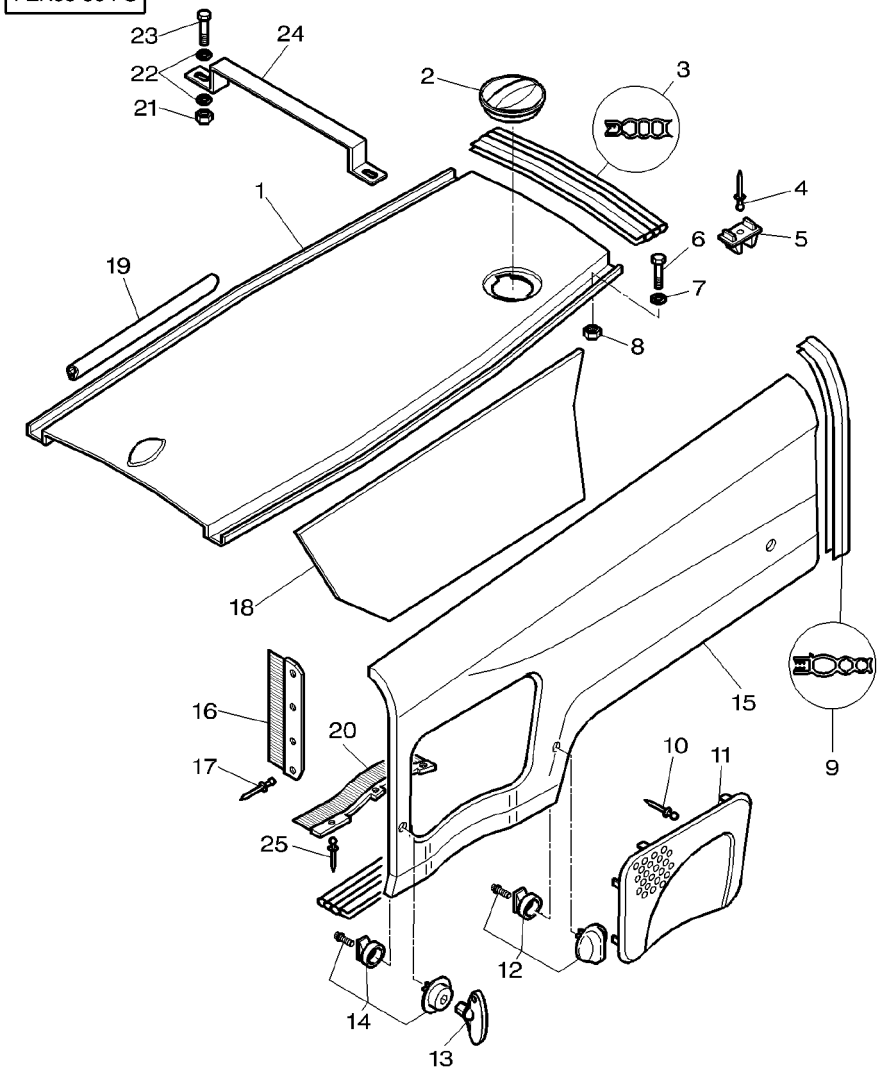

22	385361X1		**4**	WASHER METRIC	RONDELLE METR. RONDELLA METRICO
23	339228X1	M8X12	**2**	SCREW METRIC	SCHEIBE METRISCH ARANDELA METRICO VIS METRIQUE VITE METRICA
24	3781252M2		**1**	SEALING HOLDER	SCHRAUBE METR TORNILLO METRICO PORTE JOINT PORTA TENUTA
25	3010935X1		**6**	RIVET	DICHTRINGHALTER SOPORTE DE RETEN RIVET RIVETTO
					NIET REMACHE

[A] TRACTOR WITH PLATFORM
TRACTEUR AVEC PLATEFORME
SCHLEPPER MIT PLATTFORM
TRATTORE CON PIATTAFORMA
TRACTOR CON PLATAFORMA

Sheet Metal Carrosserie Verkleidung Carrozzeria Emplanchados	Hood Handle Poignee Capot Handmotorhaube Impugnatura Cofano Puxador Capo	100-10

1-ZR28-001-A

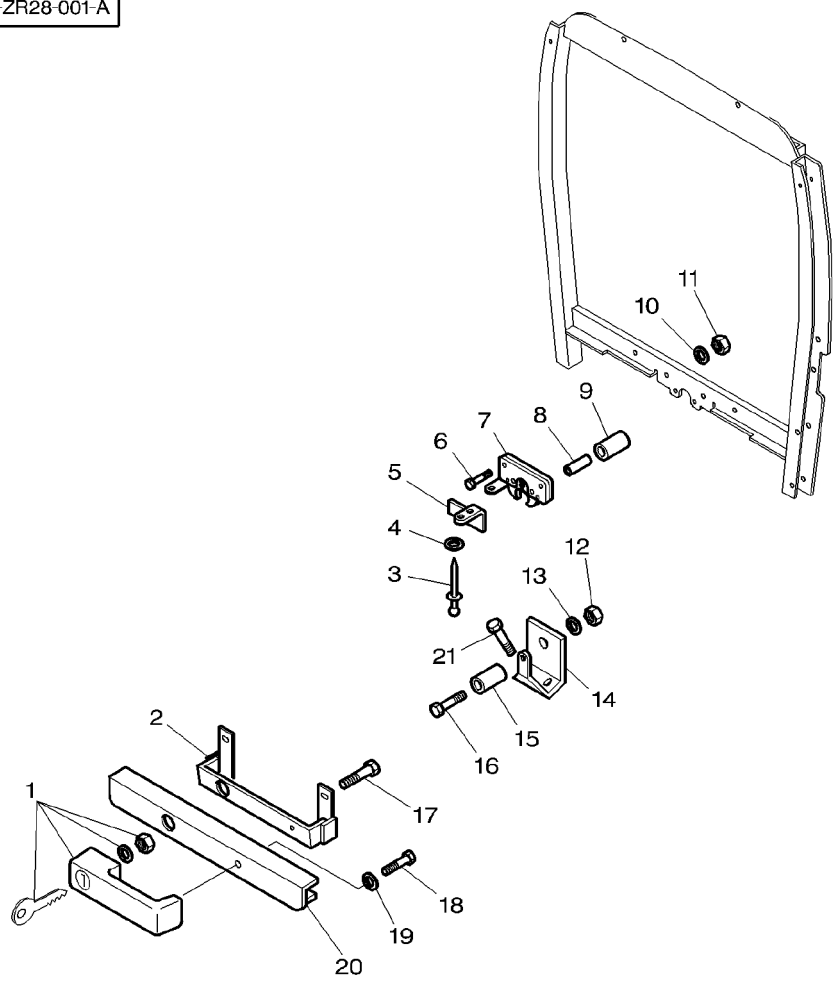

1	**3902356M91**			**1**	HANDLE	POIGNEE MANIGLIA	HANDGRIFF MANETA
2	3780988M3			**1**	BRACKET	SUPPORT FIXATION SUPPORTO FISSAGG	HALTEARM SOPORTE
3	391354X1			**2**	RIVET	RIVET RIVETTO	NIET REMACHE
4	390468X1			**2**	WASHER METRIC	RONDELLE METR. RONDELLA METRICO	SCHEIBE METRISCH ARANDELA METRICO
5	3780990M2			**1**	STRAP	PATTE CORREGGIA	LASCHE FAJA
6	339262X1	M6X30		**2**	BOLT METRIC	BOULON METRIQUE BULLONE METRICO	MASCH.SCHRB MET PERNO METRICO
6	3015036X1	M6X70	➡| H186024	**2**	SCREW	VIS VITE	SCHRAUBE TORNILLO
7	72161441			**1**	LATCH	VERROU SALISCENDI	RIEGEL CERROJO
8	3781976M1		➡| H186024	**2**	SPACER	ENTRETOISE DISTANZIALE	ABSTANDSTUECK PIEZA DISTANCIA
9	3781233M1		➡| H186024	**2**	ROLL	ROULEAU FRANGIZOLLE	WALZE RULO
10	390971X1		➡| H186024	**4**	WASHER METRIC	RONDELLE METR. RONDELLA METRICO	SCHEIBE METRISCH ARANDELA METRICO
10	390971X1		➡ H186025	**2**	WASHER METRIC	RONDELLE METR. RONDELLA METRICO	SCHEIBE METRISCH ARANDELA METRICO
11	339030X1		➡| H186024	**4**	NUT METRIC	ECROU METRIQUE DADO METRICO	MUTTER METRISCH TUERCA METRICO
11	339030X1		➡ H186025	**2**	NUT METRIC	ECROU METRIQUE DADO METRICO	MUTTER METRISCH TUERCA METRICO
12	339030X1			**1**	NUT METRIC	ECROU METRIQUE DADO METRICO	MUTTER METRISCH TUERCA METRICO
13	390971X1			**1**	WASHER METRIC	RONDELLE METR. RONDELLA METRICO	SCHEIBE METRISCH ARANDELA METRICO
14	3780699M4			**1**	BRACKET	SUPPORT FIXATION SUPPORTO FISSAGG	HALTEARM SOPORTE
15	3781195M3			**1**	CLEVIS PIN	AXE PERNO D'ATTACCO	SPLINTBOLZEN BULON CILINDRICO
16	3010445X1	M6X80		**1**	SCREW METRIC	VIS METRIQUE VITE METRICA	SCHRAUBE METR TORNILLO METRICO
17	339228X1	M8X12		**2**	SCREW METRIC	VIS METRIQUE VITE METRICA	SCHRAUBE METR TORNILLO METRICO
18	339560X1	M6X16		**1**	SCREW METRIC	VIS METRIQUE VITE METRICA	SCHRAUBE METR TORNILLO METRICO
19	390971X1			**1**	WASHER METRIC	RONDELLE METR. RONDELLA METRICO	SCHEIBE METRISCH ARANDELA METRICO
20	3780998M92			**1**	GRILLE	GRILLE GRIGLIA	GRILL REJILLA
21	339124X1	M8X16		**2**	SCREW METRIC	VIS METRIQUE VITE METRICA	SCHRAUBE METR TORNILLO METRICO

Sheet Metal Carrosserie Verkleidung Carrozzeria Emplanchados	Screen Frame Armature Calandre Gittersieb Armatur Armatura Reticolo Armadura Calandra	100-15

1-ZR27-001-D

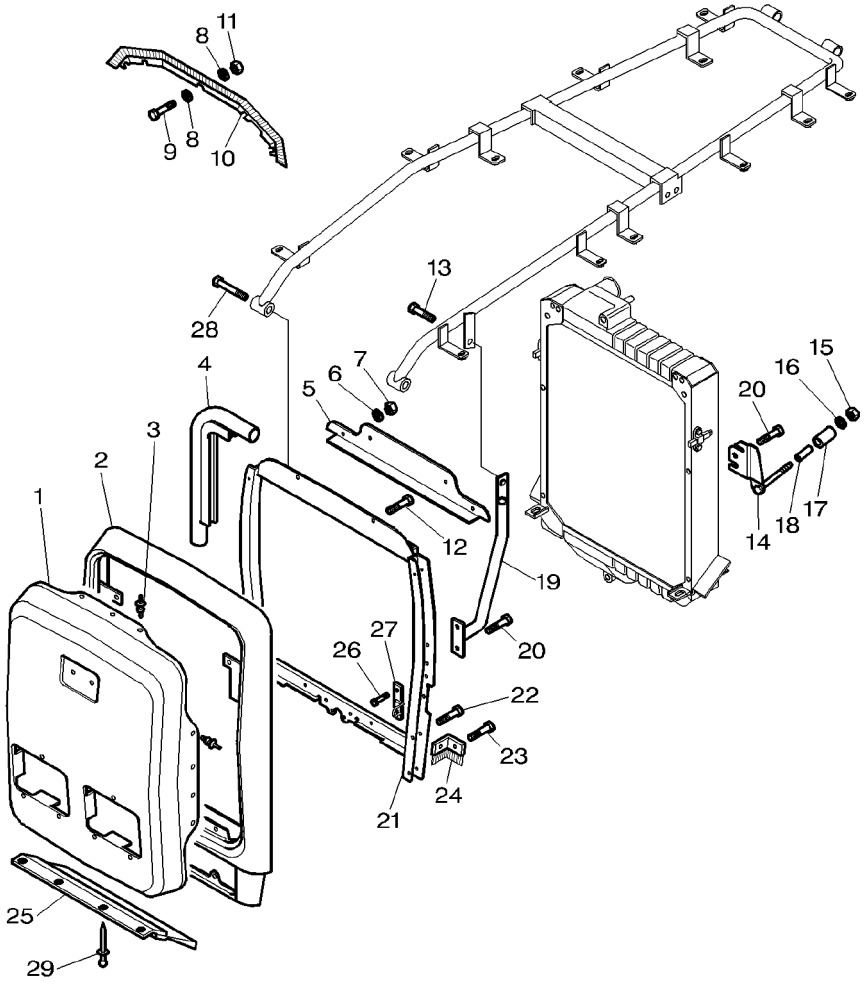

1	3805876M91		1	GRILLE	GRILLE GRIGLIA	GRILL REJILLA
2	3779302M2		1	SCREEN	CALANDRE RETICOLO	GITTERSIEB CALANDRA
3	3010935X1		18	RIVET	RIVET RIVETTO	NIET REMACHE
4	3783199M1	◀▶ 2060mm	1	GASKET	JOINT GUARNIZIONE	DICHTSCHEIBE EMPAQUETADURA.
5	3782763M1		1	SEAL PLATE	PLAQUE ETANCH PIATTO TENUTA	DICHTPLATTE PLACA RETENEDORA
6	385361X1		2	WASHER METRIC	RONDELLE METR. RONDELLA METRICO	SCHEIBE METRISCH ARANDELA METRICO
7	339169X1		2	NUT METRIC	ECROU METRIQUE DADO METRICO	MUTTER METRISCH TUERCA METRICO
8	390971X1		10	WASHER METRIC	RONDELLE METR. RONDELLA METRICO	SCHEIBE METRISCH ARANDELA METRICO
9	339666X1	M6X20	5	SCREW METRIC	VIS METRIQUE VITE METRICA	SCHRAUBE METR TORNILLO METRICO
10	3782004M1		1	GASKET	JOINT GUARNIZIONE	DICHTSCHEIBE EMPAQUETADURA.
11	339030X1		5	NUT METRIC	ECROU METRIQUE DADO METRICO	MUTTER METRISCH TUERCA METRICO
12	391074X1	M6X25	2	SCREW METRIC	VIS METRIQUE VITE METRICA	SCHRAUBE METR TORNILLO METRICO
13	339228X1	M8X12	2	SCREW METRIC	VIS METRIQUE VITE METRICA	SCHRAUBE METR TORNILLO METRICO
14	3782075M3	▶	1	SUPPORT	SUPPORT SUPPORTO	LAGERUNG DISPOS.DE SOSTEN
14	3782076M3	◀	1	SUPPORT	SUPPORT SUPPORTO	LAGERUNG DISPOS.DE SOSTEN
15	339169X1		2	NUT METRIC	ECROU METRIQUE DADO METRICO	MUTTER METRISCH TUERCA METRICO
16	385361X1		2	WASHER METRIC	RONDELLE METR. RONDELLA METRICO	SCHEIBE METRISCH ARANDELA METRICO
17	3782073M1		2	ROLL	ROULEAU FRANGIZOLLE	WALZE RULO
18	3782072M1		2	SPACER	ENTRETOISE DISTANZIALE	ABSTANDSTUECK PIEZA DISTANCIA
19	3781166M3	◀	1	STRUT	JAMBE DE FORCE PUNTONE	VERSTREBUNG CODAL
19	3781194M3	▶	1	STRUT	JAMBE DE FORCE PUNTONE	VERSTREBUNG CODAL
20	339124X1	M8X16	6	SCREW METRIC	VIS METRIQUE VITE METRICA	SCHRAUBE METR TORNILLO METRICO
21	3782630M2		1	SUPPORT	SUPPORT SUPPORTO	LAGERUNG DISPOS.DE SOSTEN
22	1440922X1	M6X60	4	BOLT	BOULON BULLONE	MASCH.SCHRAUBE PERNO
23	391074X1	M6X12	4	SCREW METRIC	VIS METRIQUE VITE METRICA	SCHRAUBE METR TORNILLO METRICO
24	3782726M3	◀	1	SEAL	JOINT ETANCHEITE PARAOLIO	DICHTRING RETEN

Sheet Metal	Screen Frame
Carrosserie	Armature Calandre
Verkleidung	Gittersieb Armatur
Carrozzeria	Armatura Reticolo
Emplanchados	Armadura Calandra

100-15

1-ZR27-001-D

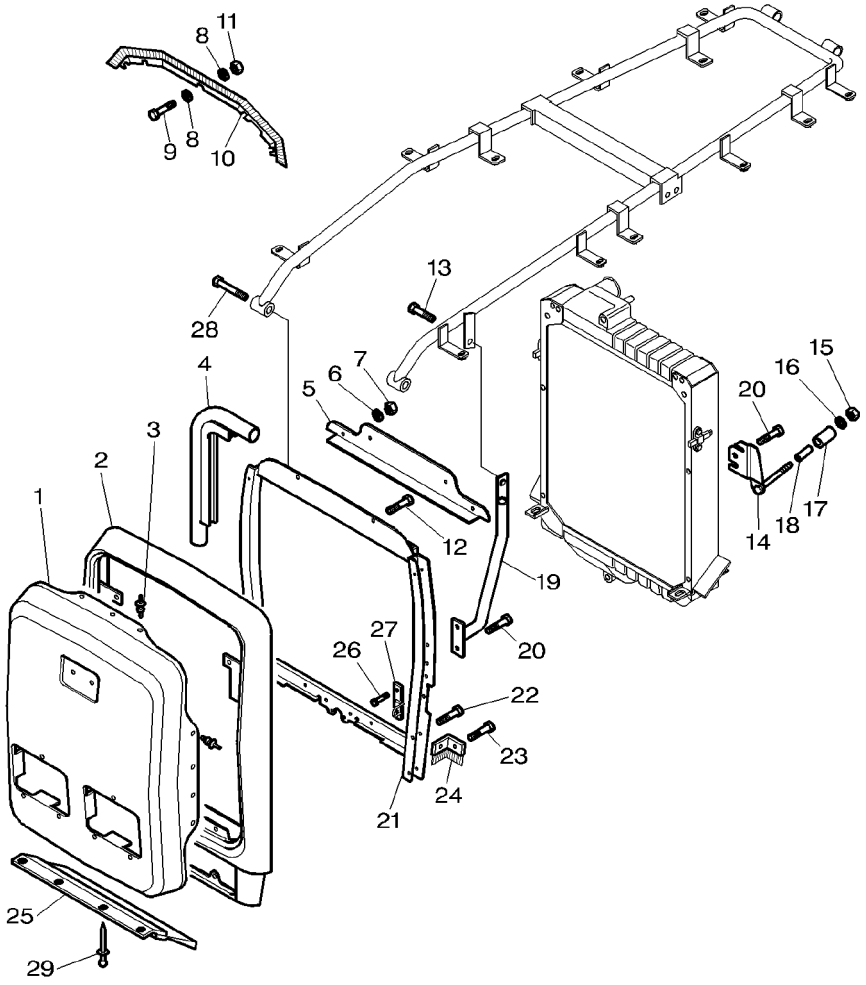

24	3782727M3	▶	**1**	SEAL	JOINT ETANCHEITE PARAOLIO	DICHTRING RETEN
25	3782722M2	◀▶ 535MM ▶| H285006	**1**	GASKET	JOINT GUARNIZIONE	DICHTSCHEIBE EMPAQUETADURA.
25	3781999M2	◀▶ 450MM ▶| H285007	**1**	GASKET	JOINT GUARNIZIONE	DICHTSCHEIBE EMPAQUETADURA.
26	339228X1	M8X12	**4**	SCREW METRIC	VIS METRIQUE VITE METRICA	SCHRAUBE METR TORNILLO METRICO
27	3780693M2	◀	**1**	BRACKET	SUPPORT FIXATION SUPPORTO FISSAGG	HALTEARM SOPORTE
27	3780694M2	▶	**1**	BRACKET	SUPPORT FIXATION SUPPORTO FISSAGG	HALTEARM SOPORTE
28	3009497X1	M10X50	**2**	BOLT METRIC	BOULON METRIQUE BULLONE METRICO	MASCH.SCHRB MET PERNO METRICO
29	3808664M1		**4**	RIVET	RIVET RIVETTO	NIET REMACHE

Sheet Metal Carrosserie Verkleidung Carrozzeria Emplanchados	Screen Frame Armature Calandre Gittersieb Armatur Armatura Reticolo Armadura Calandra	100-20	Platform Plateforme Plattform Piattaforma Plataforma

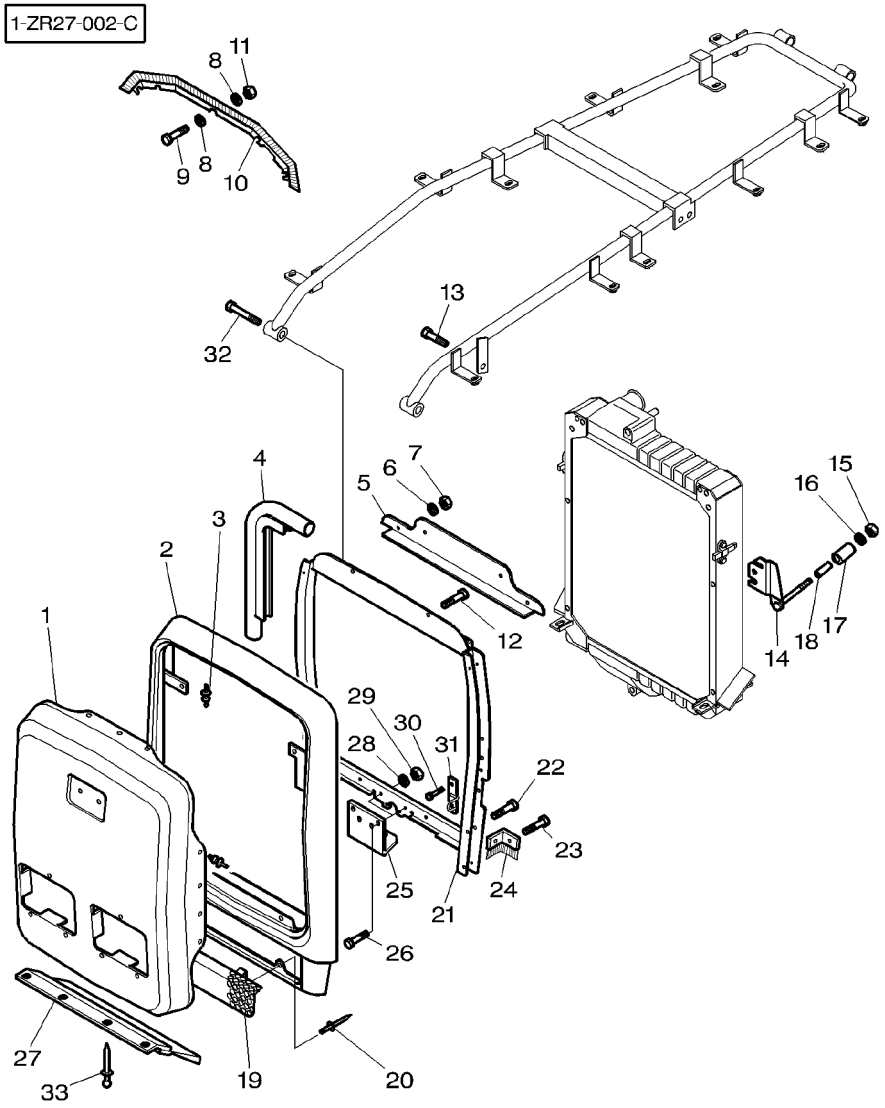

1	3805876M91		1	GRILLE	GRILLE GRIGLIA	GRILL REJILLA
2	3779302M2		1	SCREEN	CALANDRE RETICOLO	GITTERSIEB CALANDRA
3	3010935X1		34	RIVET	RIVET RIVETTO	NIET REMACHE
4	3783199M1	◀▶ 2060mm	1	GASKET	JOINT GUARNIZIONE	DICHTSCHEIBE EMPAQUETADURA.
5	3782763M1		1	SEAL PLATE	PLAQUE ETANCH PIATTO TENUTA	DICHTPLATTE PLACA RETENEDORA
6	385361X1		2	WASHER METRIC	RONDELLE METR. RONDELLA METRICO	SCHEIBE METRISCH ARANDELA METRICO
7	339169X1		2	NUT METRIC	ECROU METRIQUE DADO METRICO	MUTTER METRISCH TUERCA METRICO
8	390971X1		10	WASHER METRIC	RONDELLE METR. RONDELLA METRICO	SCHEIBE METRISCH ARANDELA METRICO
9	339666X1	M6X20	5	SCREW METRIC	VIS METRIQUE VITE METRICA	SCHRAUBE METR TORNILLO METRICO
10	3782004M1		1	GASKET	JOINT GUARNIZIONE	DICHTSCHEIBE EMPAQUETADURA.
11	339030X1		5	NUT METRIC	ECROU METRIQUE DADO METRICO	MUTTER METRISCH TUERCA METRICO
12	391074X1	M6X12	2	SCREW METRIC	VIS METRIQUE VITE METRICA	SCHRAUBE METR TORNILLO METRICO
13	339228X1	M8X12	2	SCREW METRIC	VIS METRIQUE VITE METRICA	SCHRAUBE METR TORNILLO METRICO
14	3782075M3	▶	1	SUPPORT	SUPPORT SUPPORTO	LAGERUNG DISPOS.DE SOSTEN
14	3782076M3	◀	1	SUPPORT	SUPPORT SUPPORTO	LAGERUNG DISPOS.DE SOSTEN
15	339169X1		2	NUT METRIC	ECROU METRIQUE DADO METRICO	MUTTER METRISCH TUERCA METRICO
16	385361X1		2	WASHER METRIC	RONDELLE METR. RONDELLA METRICO	SCHEIBE METRISCH ARANDELA METRICO
17	3782073M1		2	ROLL	ROULEAU FRANGIZOLLE	WALZE RULO
18	3782072M1		2	SPACER	ENTRETOISE DISTANZIALE	ABSTANDSTUECK PIEZA DISTANCIA
19	3783045M1		1	GRILLE	GRILLE GRIGLIA	GRILL REJILLA
20	391354X1	M8X16	2	RIVET	RIVET RIVETTO	NIET REMACHE
21	3782630M2		1	SUPPORT	SUPPORT SUPPORTO	LAGERUNG DISPOS.DE SOSTEN
22	1440922X1	M6X60	4	BOLT	BOULON BULLONE	MASCH.SCHRAUBE PERNO
23	391074X1	M6X12	4	SCREW METRIC	VIS METRIQUE VITE METRICA	SCHRAUBE METR TORNILLO METRICO
24	3782726M3	◀	1	SEAL	JOINT ETANCHEITE PARAOLIO	DICHTRING RETEN
24	3782727M3	▶	1	SEAL	JOINT ETANCHEITE PARAOLIO	DICHTRING RETEN

Sheet Metal Carrosserie Verkleidung Carrozzeria Emplanchados	Screen Frame Armature Calandre Gittersieb Armatur Armatura Reticolo Armadura Calandra	100-20	Platform Plateforme Plattform Piattaforma Plataforma

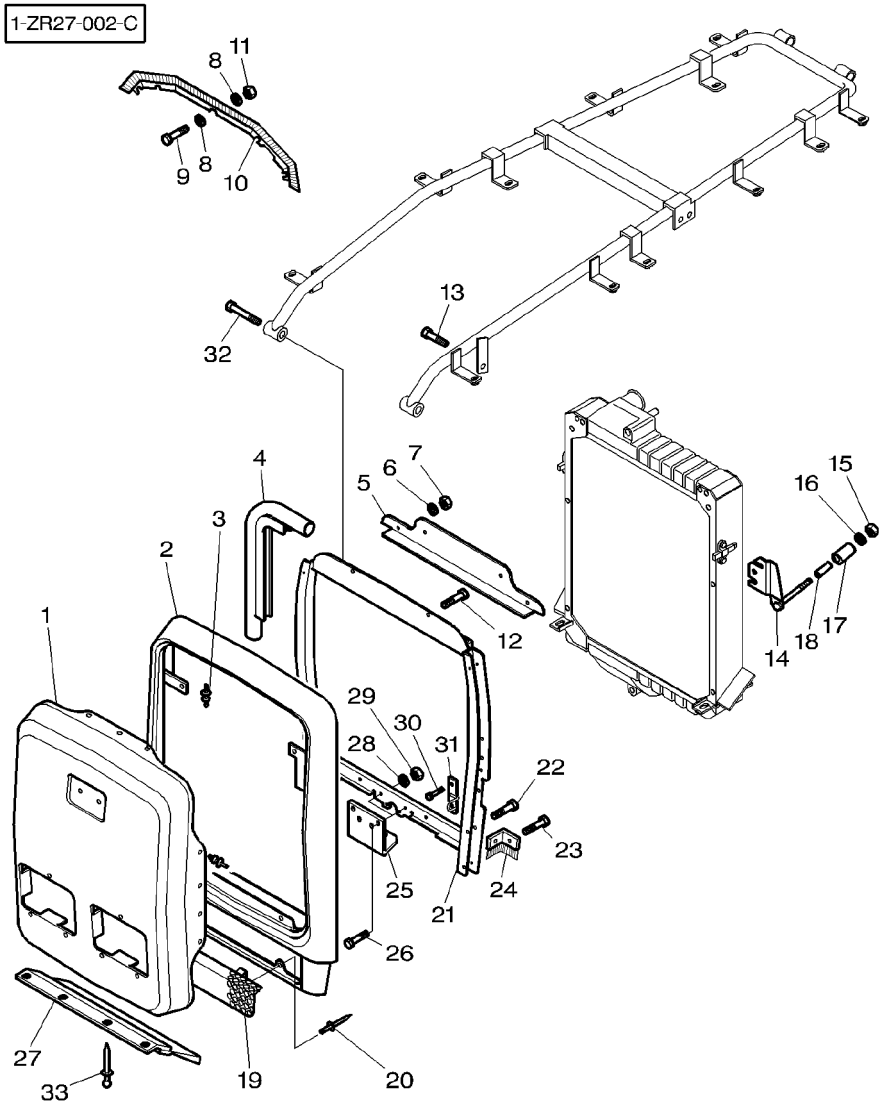

25	3783043M1		**1**	PLATE	PLAQUE PIASTRA	PLATTE PLATO
26	339560X1	M6X16	**4**	SCREW METRIC	VIS METRIQUE VITE METRICA	SCHRAUBE METR TORNILLO METRICO
27	3782722M2	◀▶ 535MM ▬▶ H285006	**1**	GASKET	JOINT GUARNIZIONE	DICHTSCHEIBE EMPAQUETADURA.
27	3781999M2	◀▶ 450MM ▬▶ H285007	**1**	GASKET	JOINT GUARNIZIONE	DICHTSCHEIBE EMPAQUETADURA.
28	390971X1		**4**	WASHER METRIC	RONDELLE METR. RONDELLA METRICO	SCHEIBE METRISCH ARANDELA METRICO
29	339030X1		**4**	NUT METRIC	ECROU METRIQUE DADO METRICO	MUTTER METRISCH TUERCA METRICO
30	339228X1	M8X12	**4**	SCREW METRIC	VIS METRIQUE VITE METRICA	SCHRAUBE METR TORNILLO METRICO
31	3780693M2	◀	**1**	BRACKET	SUPPORT FIXATION SUPPORTO FISSAGG	HALTEARM SOPORTE
31	3780694M2	▶	**1**	BRACKET	SUPPORT FIXATION SUPPORTO FISSAGG	HALTEARM SOPORTE
32	3009497X1	M10X50	**2**	BOLT METRIC	BOULON METRIQUE BULLONE METRICO	MASCH.SCHRB MET PERNO METRICO
33	3808664M1		**4**	RIVET	RIVET RIVETTO	NIET REMACHE

Sheet Metal	Hood Frame
Carrosserie	Armature Capot
Verkleidung	Motorhaube Armatur
Carrozzeria	Armatura Cofano
Emplanchados	Armadura Capo

100-25

1-ZR25-002-D

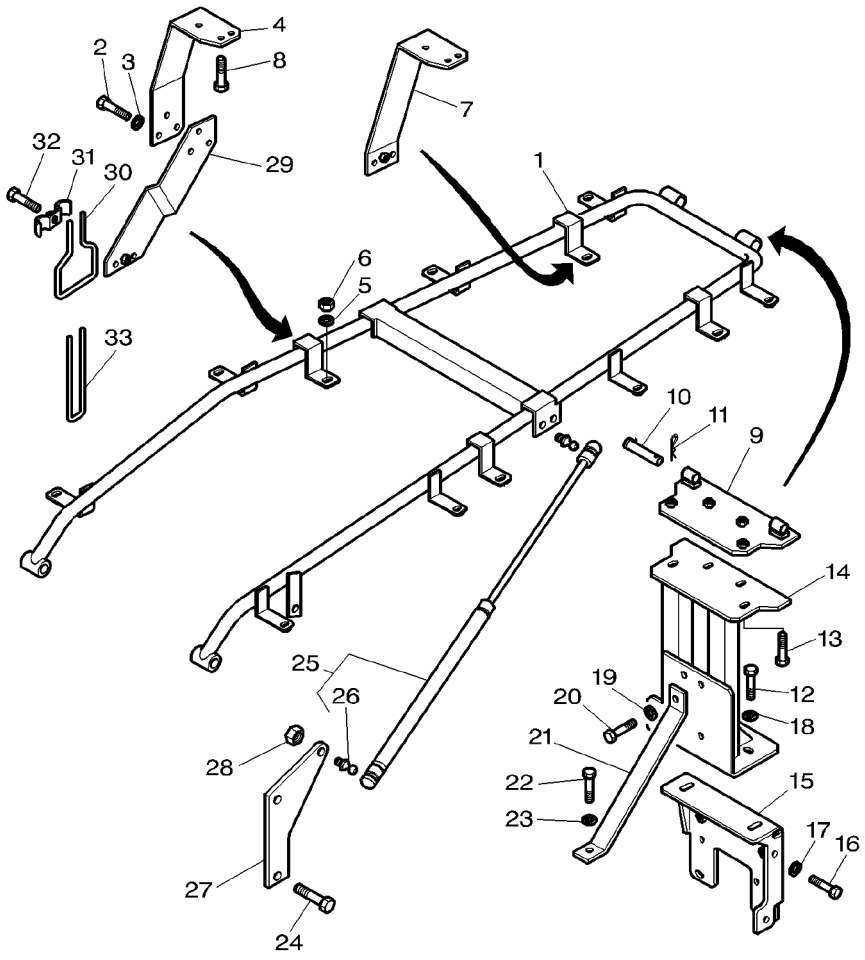

1	3782629M2		1	CHASSIS	CHASSIS	FAHRGESTELL
					CHASSIS	CHASIS
2	339123X1	M8X20	6	SCREW METRIC	VIS METRIQUE	SCHRAUBE METR
					VITE METRICA	TORNILLO METRICO
3	385361X1		6	WASHER METRIC	RONDELLE METR.	SCHEIBE METRISCH
					RONDELLA METRICO	ARANDELA METRICO
4	3782728M1	◀	1	SUPPORT	SUPPORT	LAGERUNG
					SUPPORTO	DISPOS.DE SOSTEN
4	3782729M1	▶	1	SUPPORT	SUPPORT	LAGERUNG
					SUPPORTO	DISPOS.DE SOSTEN
5	385361X1		12	WASHER METRIC	RONDELLE METR.	SCHEIBE METRISCH
					RONDELLA METRICO	ARANDELA METRICO
6	339169X1		12	NUT METRIC	ECROU METRIQUE	MUTTER METRISCH
					DADO METRICO	TUERCA METRICO
7	3782730M1	◀	1	SUPPORT	SUPPORT	LAGERUNG
					SUPPORTO	DISPOS.DE SOSTEN
7	3782731M1	▶	1	SUPPORT	SUPPORT	LAGERUNG
					SUPPORTO	DISPOS.DE SOSTEN
8	339761X1	M8X25	12	SCREW METRIC	VIS METRIQUE	SCHRAUBE METR
					VITE METRICA	TORNILLO METRICO
9	3781237M5		1	PLATE	PLAQUE	PLATTE
					PIASTRA	PLATO
10	3779399M1		2	CLEVIS PIN	AXE	SPLINTBOLZEN
					PERNO D'ATTACCO	BULON CILINDRICO
11	354066X1		2	PIN	GOUPILLE	BOLZEN
					PERNO	PASADOR
12	339337X1	M8X30	2	SCREW METRIC	VIS METRIQUE	SCHRAUBE METR
					VITE METRICA	TORNILLO METRICO
13	339337X1	M8X30	2	SCREW METRIC	VIS METRIQUE	SCHRAUBE METR
					VITE METRICA	TORNILLO METRICO
14	3781226M5		1	SUPPORT	SUPPORT	LAGERUNG
					SUPPORTO	DISPOS.DE SOSTEN
15	3782545M3	⇒ 3781225M4	1	SUPPORT	SUPPORT	LAGERUNG
					SUPPORTO	DISPOS.DE SOSTEN
16	3009492X1	M10X25	3	SCREW METRIC	VIS METRIQUE	SCHRAUBE METR
					VITE METRICA	TORNILLO METRICO
17	385362X1		3	WASHER METRIC	RONDELLE METR.	SCHEIBE METRISCH
					RONDELLA METRICO	ARANDELA METRICO
18	385361X1		2	WASHER METRIC	RONDELLE METR.	SCHEIBE METRISCH
					RONDELLA METRICO	ARANDELA METRICO
19	390972X1		1	WASHER METRIC	RONDELLE METR.	SCHEIBE METRISCH
					RONDELLA METRICO	ARANDELA METRICO
20	339761X1	M8X25	1	SCREW METRIC	VIS METRIQUE	SCHRAUBE METR
					VITE METRICA	TORNILLO METRICO
21	3781557M1		1	REINFORCEMENT	RENFORT	VERSTAERKUNG
					RINFORZO	REFUERZO
22	3009492X1	M10X25	1	SCREW METRIC	VIS METRIQUE	SCHRAUBE METR
					VITE METRICA	TORNILLO METRICO
23	390734X1		1	WASHER METRIC	RONDELLE METR.	SCHEIBE METRISCH
					RONDELLA METRICO	ARANDELA METRICO
24	339123X1	M8X20	4	SCREW METRIC	VIS METRIQUE	SCHRAUBE METR
					VITE METRICA	TORNILLO METRICO

Sheet Metal	Hood Frame
Carrosserie	Armature Capot
Verkleidung	Motorhaube Armatur
Carrozzeria	Armatura Cofano
Emplanchados	Armadura Capo

100-25

1-ZR25-002-D

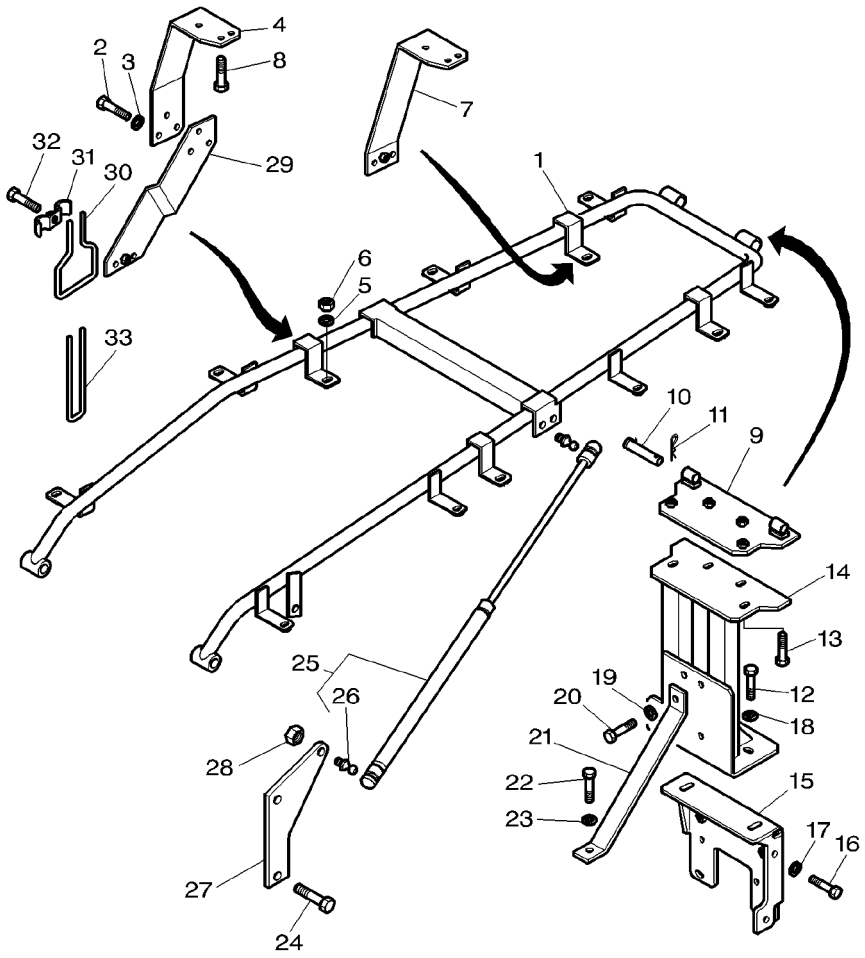

25	3782975M1		**2**	RAM	VERIN CILINDRO IDRAUL.	HYDR.ZYLINDER ARIETE
26	3903200M1	25	**2**	TOGGLE	ROTULE ROTULA	GELENKZAPFEN PERNO ENGANCHE
27	3783149M1		**2**	SUPPORT	SUPPORT SUPPORTO	LAGERUNG DISPOS.DE SOSTEN
28	339169X1		**4**	NUT METRIC	ECROU METRIQUE DADO METRICO	MUTTER METRISCH TUERCA METRICO
29	3782732M1	◀	**1**	SUPPORT	SUPPORT SUPPORTO	LAGERUNG DISPOS.DE SOSTEN
29	3782733M1	▶	**1**	SUPPORT	SUPPORT SUPPORTO	LAGERUNG DISPOS.DE SOSTEN
30	3808671M1		**4**	WIRE	FIL FILO DI FERRO	DRAHT HILO
31	3597673M1		**4**	CATCH	LOQUET PORTE ANCORAGGIO	FALLE FIJADOR
32	339123X1	M8X20	**4**	SCREW METRIC	VIS METRIQUE VITE METRICA	SCHRAUBE METR TORNILLO METRICO
33	3780301M1		**2**	TIE	ATTACHE TRAVERSA ATTACCO	KUPPL.STANGE BARRA DE ENLACE

Cab Mountings And Step / Stairs
Fixation Cabine Et Marchepied
Befestigung Und Aufstieg
Montaggio Cabina E Gradini
Montantes Y Estribo

100-30

1-ZU27-005-B

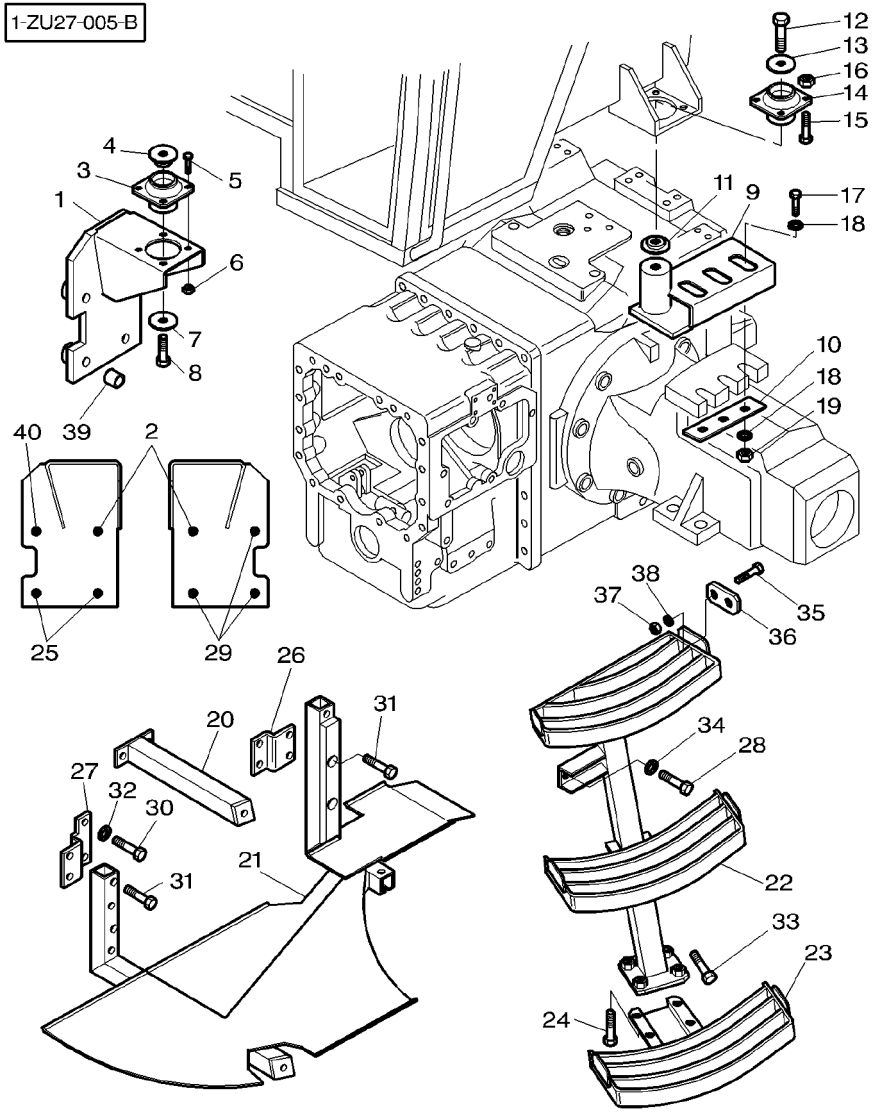

1	3777369M2	◀	1	SUPPORT	SUPPORT SUPPORTO	LAGERUNG DISPOS.DE SOSTEN
1	3777370M2	▶	1	SUPPORT	SUPPORT SUPPORTO	LAGERUNG DISPOS.DE SOSTEN
2	3001915X1	M16X85	2	SCREW	VIS VITE	SCHRAUBE TORNILLO
3	3712693M1		2	VIBRATION MOUNT	SILENT BLOC ANTIVIBRANTE	GUMMIMETALL MONTAJE ANTI-VIB
4	3388272M1		2	WASHER	RONDELLE RONDELLA	UNTERLEGSCHEIBE ARANDELA
5	3009492X1	M10X25	7	SCREW METRIC	VIS METRIQUE VITE METRICA	SCHRAUBE METR TORNILLO METRICO
5	3009493X1	M10X30	1	SCREW METRIC	VIS METRIQUE VITE METRICA	SCHRAUBE METR TORNILLO METRICO
6	3009693X1		8	NUT METRIC	ECROU METRIQUE DADO METRICO	MUTTER METRISCH TUERCA METRICO
7	3712809M2		2	SPACER	ENTRETOISE DISTANZIALE	ABSTANDSTUECK PIEZA DISTANCIA
8	339805X1	M16X100	2	BOLT METRIC	BOULON METRIQUE BULLONE METRICO	MASCH.SCHRB MET PERNO METRICO
9	3779767M1	◀	1	SUPPORT	SUPPORT SUPPORTO	LAGERUNG DISPOS.DE SOSTEN
9	3779768M1	▶	1	SUPPORT	SUPPORT SUPPORTO	LAGERUNG DISPOS.DE SOSTEN
10	3777417M1		2	PLATE	PLAQUE PIASTRA	PLATTE PLATO
11	3388272M1		2	WASHER	RONDELLE RONDELLA	UNTERLEGSCHEIBE ARANDELA
12	339805X1	M16X100	2	BOLT METRIC	BOULON METRIQUE BULLONE METRICO	MASCH.SCHRB MET PERNO METRICO
13	3712809M2		2	SPACER	ENTRETOISE DISTANZIALE	ABSTANDSTUECK PIEZA DISTANCIA
14	3715926M1		2	BUFFER	BUTOIR RESPINGENTE	PUFFER PARACHOQUES
15	3009492X1	M10X25	8	SCREW METRIC	VIS METRIQUE VITE METRICA	SCHRAUBE METR TORNILLO METRICO
16	3009693X1		8	NUT METRIC	ECROU METRIQUE DADO METRICO	MUTTER METRISCH TUERCA METRICO
17	339805X1	M16X100	6	BOLT METRIC	BOULON METRIQUE BULLONE METRICO	MASCH.SCHRB MET PERNO METRICO
18	3019575X1		12	WASHER METRIC	RONDELLE METR. RONDELLA METRICO	SCHEIBE METRISCH ARANDELA METRICO
19	339034X1		6	NUT METRIC	ECROU METRIQUE DADO METRICO	MUTTER METRISCH TUERCA METRICO
20	3778242M1	➡ H257029	1	SUPPORT	SUPPORT SUPPORTO	LAGERUNG DISPOS.DE SOSTEN
20	3783408M2	➡ H257030	1	SUPPORT	SUPPORT SUPPORTO	LAGERUNG DISPOS.DE SOSTEN
21	3781374M93		1	FRAME	BATI TELAIO	RAHMEN BASTIDOR
22	3778240M92		1	STEP	MARCHEPIED GRADINO	TRITTBRETT ESCALON

Cab Mountings And Step / Stairs
Fixation Cabine Et Marchepied
Befestigung Und Aufstieg
Montaggio Cabina E Gradini
Montantes Y Estribo

100-30

1-ZU27-005-B

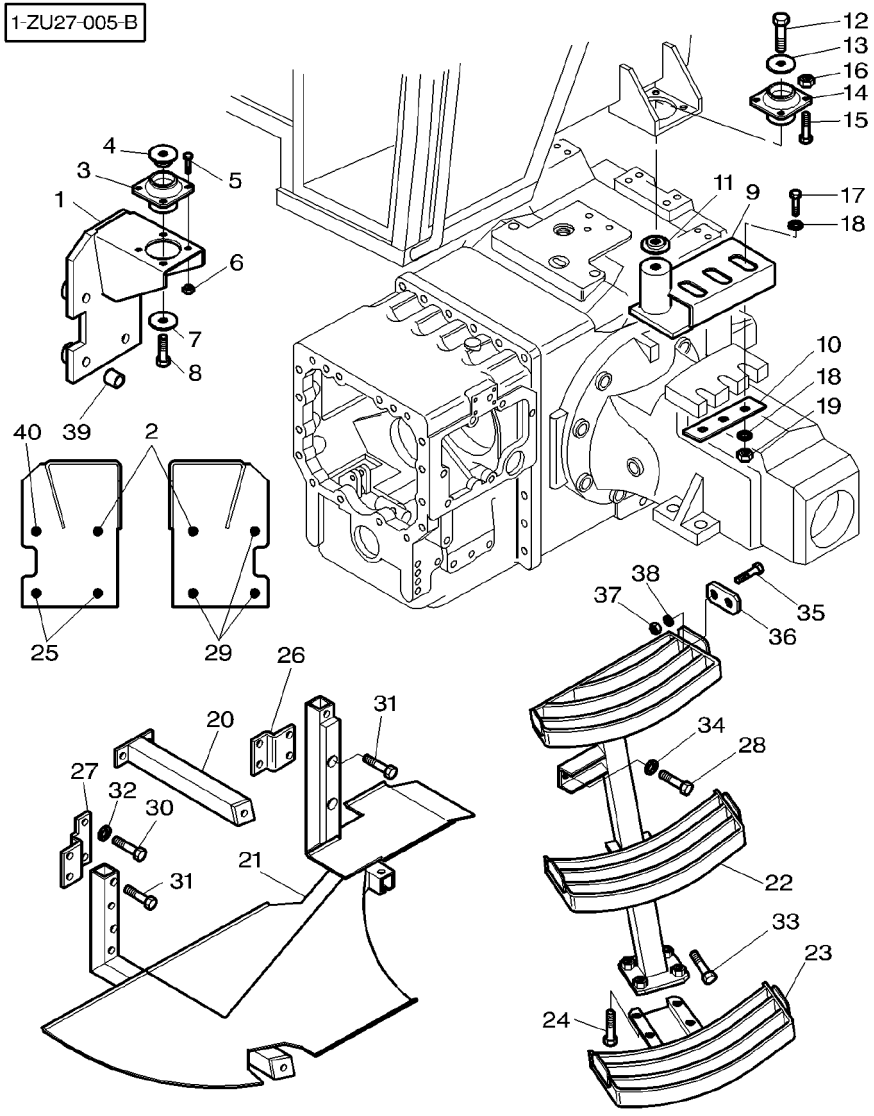

23	3778337M91		**1**	STAIR	MARCHE SCALINO	TREPPE PELDANO
24	3009491X1	M10X20	**4**	BOLT METRIC	BOULON METRIQUE BULLONE METRICO	MASCH.SCHRB MET PERNO METRICO
25	339616X1	M16X120	**2**	BOLT METRIC	BOULON METRIQUE BULLONE METRICO	MASCH.SCHRB MET PERNO METRICO
26	3778294M2	[A]	**1**	PLATE	PLAQUE PIASTRA	PLATTE PLATO
27	3778295M2	[A]	**1**	PLATE	PLAQUE PIASTRA	PLATTE PLATO
28	**339275X1**	M16X35	**1**	SCREW METRIC	VIS METRIQUE VITE METRICA	SCHRAUBE METR TORNILLO METRICO
29	3019575X1		**3**	WASHER METRIC	RONDELLE METR. RONDELLA METRICO	SCHEIBE METRISCH ARANDELA METRICO
29	339616X1	M16X120	**3**	BOLT METRIC	BOULON METRIQUE BULLONE METRICO	MASCH.SCHRB MET PERNO METRICO
30	354710X1	[A] 3/4-10X50	**4**	SCREW UNC	VIS UNC VITE UNC	SCHRAUBE UNC TORNILLO UNC
31	390864X1	[A] M16X80	**4**	BOLT METRIC	BOULON METRIQUE BULLONE METRICO	MASCH.SCHRB MET PERNO METRICO
31	391889X1	[B] M16X70	**4**	SCREW	VIS VITE	SCHRAUBE TORNILLO
32	353775X1	[A]	**4**	WASHER	RONDELLE RONDELLA	UNTERLEGSCHEIBE ARANDELA
33	391889X1	[B] M16X70	**1**	SCREW	VIS VITE	SCHRAUBE TORNILLO
34	3019575X1		**1**	WASHER METRIC	RONDELLE METR. RONDELLA METRICO	SCHEIBE METRISCH ARANDELA METRICO
35	339123X1	M8X20 ➡| H259009	**2**	SCREW METRIC	VIS METRIQUE VITE METRICA	SCHRAUBE METR TORNILLO METRICO
36	3781189M1	➡| H259009	**1**	STOP	BUTEE STOP	ANSCHLAG PARO
37	339169X1	➡| H259009	**2**	NUT METRIC	ECROU METRIQUE DADO METRICO	MUTTER METRISCH TUERCA METRICO
38	390972X1	➡| H259009	**2**	WASHER METRIC	RONDELLE METR. RONDELLA METRICO	SCHEIBE METRISCH ARANDELA METRICO
39	3010942X1		**5**	SPACER	ENTRETOISE DISTANZIALE	ABSTANDSTUECK PIEZA DISTANCIA
39	3010942X1	[C]	**2**	SPACER	ENTRETOISE DISTANZIALE	ABSTANDSTUECK PIEZA DISTANCIA
40	3001915X1	M16X85	**1**	SCREW	VIS VITE	SCHRAUBE TORNILLO
40	339498X1	[C] M16X110	**1**	SCREW	VIS VITE	SCHRAUBE TORNILLO

[A] WITH DYNASHIFT
AVEC DYNASHIFT
MIT DYNASHIFT
CON DYNASHIFT
CON DYNASHIFT

Cab Mountings And Step / Stairs
Fixation Cabine Et Marchepied
Befestigung Und Aufstieg
Montaggio Cabina E Gradini
Montantes Y Estribo

100-30

1-ZU27-005-B

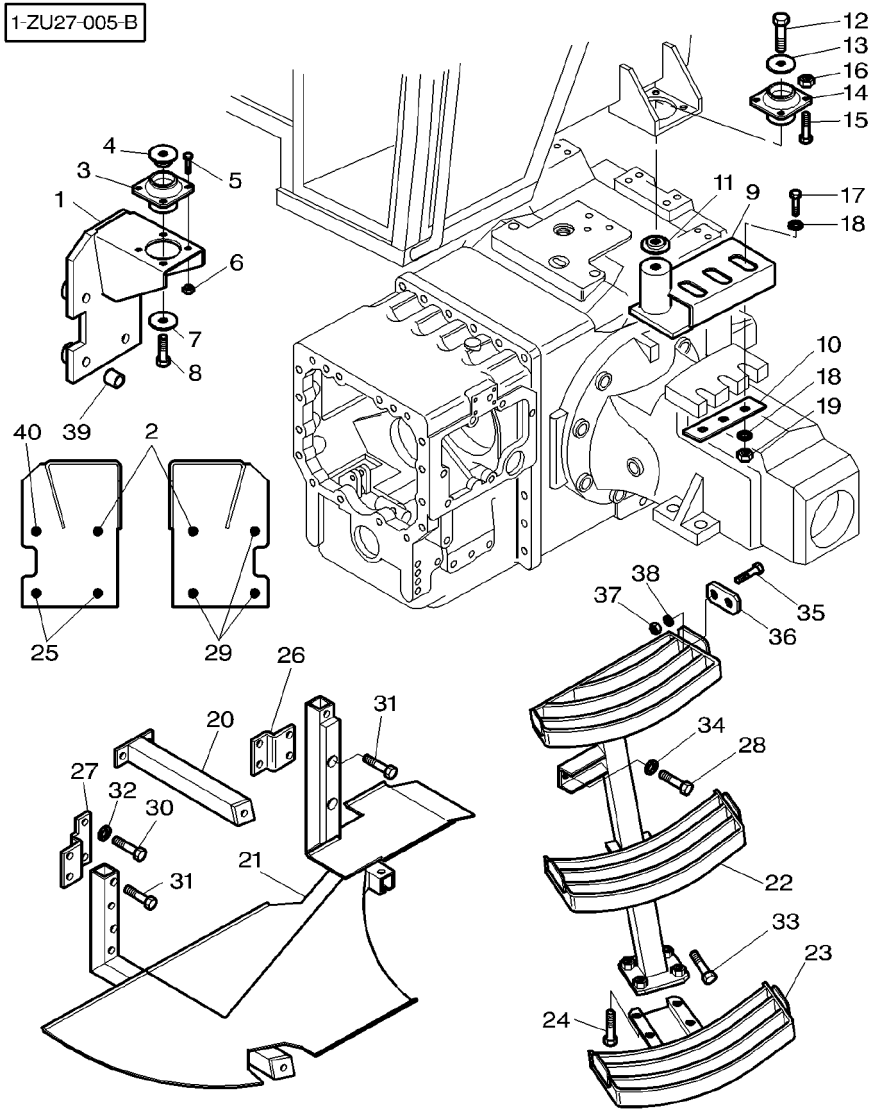

[B] WITH FULL POWERSHIFT
AVEC FULL POWERSHIFT
MIT FULL POWERSHIFT
CON FULL POWERSHIFT
CON FULL POWERSHIFT

[C] WITH FRONT LINKAGE
AVEC ATTELAGE AVANT
MIT VORDERE KUPPLUNG
CON ATTACCO ANTERIORE
CON ENGANCHE DELANTERO

Cab Mountings And Step / Stairs
Fixation Cabine Et Marchepied
Befestigung Und Aufstieg
Montaggio Cabina E Gradini
Montantes Y Estribo

100-35

United States Only
Etats Unis Seulement
Vereinigten Staaten
Solo Per Stati Uniti
Estados Unidos Solamente

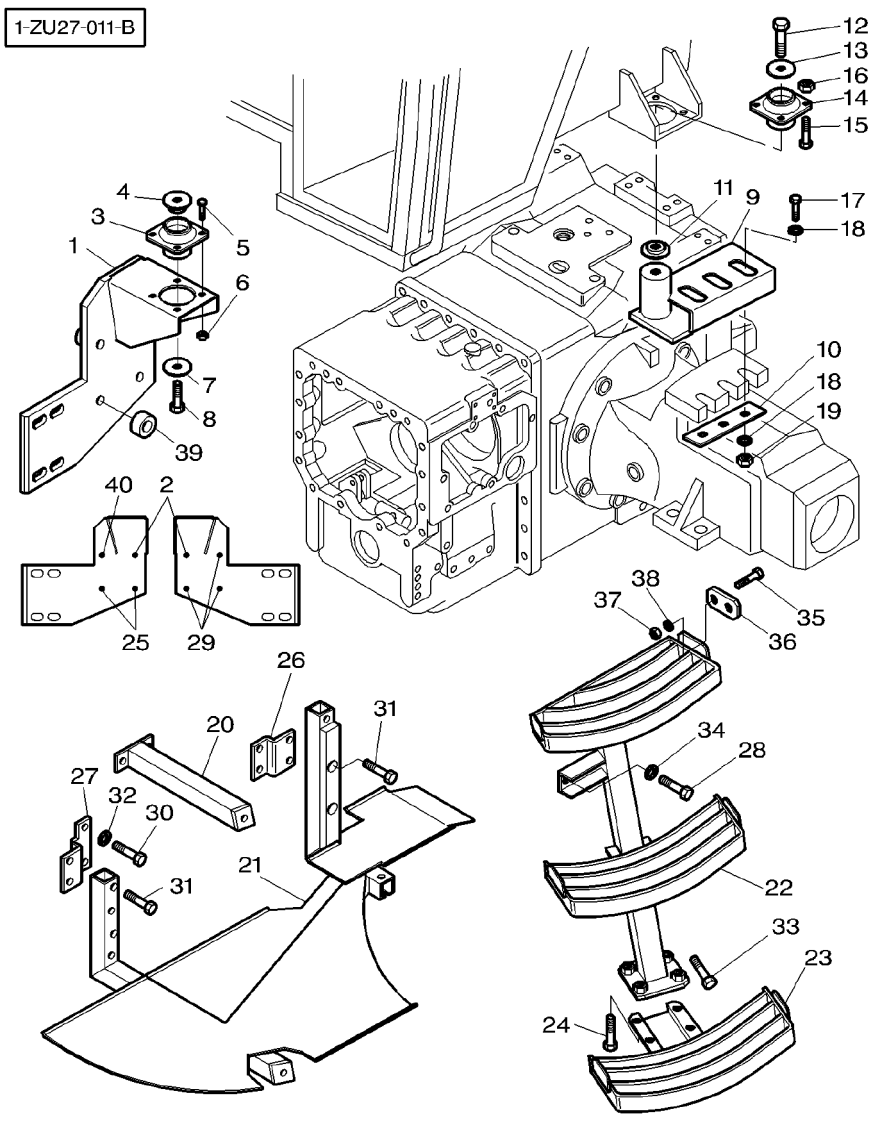

1	3715435M1	◀	**1**	SUPPORT	SUPPORT SUPPORTO	LAGERUNG DISPOS.DE SOSTEN
1	3715436M1	▶	**1**	SUPPORT	SUPPORT SUPPORTO	LAGERUNG DISPOS.DE SOSTEN
2	3001915X1	M16X85	**2**	SCREW	VIS VITE	SCHRAUBE TORNILLO
3	3712693M1		**2**	VIBRATION MOUNT	SILENT BLOC ANTIVIBRANTE	GUMMIMETALL MONTAJE ANTI-VIB
4	3388272M1		**2**	WASHER	RONDELLE RONDELLA	UNTERLEGSCHEIBE ARANDELA
5	3009492X1	M10X25	**7**	SCREW METRIC	VIS METRIQUE VITE METRICA	SCHRAUBE METR TORNILLO METRICO
5	3009493X1	M10X30	**1**	SCREW METRIC	VIS METRIQUE VITE METRICA	SCHRAUBE METR TORNILLO METRICO
6	3009693X1		**8**	NUT METRIC	ECROU METRIQUE DADO METRICO	MUTTER METRISCH TUERCA METRICO
7	3712809M2		**2**	SPACER	ENTRETOISE DISTANZIALE	ABSTANDSTUECK PIEZA DISTANCIA
8	339805X1	M16X100	**2**	BOLT METRIC	BOULON METRIQUE BULLONE METRICO	MASCH.SCHRB MET PERNO METRICO
9	3779767M1	◀	**1**	SUPPORT	SUPPORT SUPPORTO	LAGERUNG DISPOS.DE SOSTEN
9	3779768M1	▶	**1**	SUPPORT	SUPPORT SUPPORTO	LAGERUNG DISPOS.DE SOSTEN
10	3777417M1		**2**	PLATE	PLAQUE PIASTRA	PLATTE PLATO
11	3388272M1		**2**	WASHER	RONDELLE RONDELLA	UNTERLEGSCHEIBE ARANDELA
12	339805X1	M16X100	**2**	BOLT METRIC	BOULON METRIQUE BULLONE METRICO	MASCH.SCHRB MET PERNO METRICO
13	3712809M2		**2**	SPACER	ENTRETOISE DISTANZIALE	ABSTANDSTUECK PIEZA DISTANCIA
14	3715926M1		**2**	BUFFER	BUTOIR RESPINGENTE	PUFFER PARACHOQUES
15	3009492X1	M10X25	**8**	SCREW METRIC	VIS METRIQUE VITE METRICA	SCHRAUBE METR TORNILLO METRICO
16	3009693X1		**8**	NUT METRIC	ECROU METRIQUE DADO METRICO	MUTTER METRISCH TUERCA METRICO
17	339805X1	M16X100	**6**	BOLT METRIC	BOULON METRIQUE BULLONE METRICO	MASCH.SCHRB MET PERNO METRICO
18	3019575X1		**12**	WASHER METRIC	RONDELLE METR. RONDELLA METRICO	SCHEIBE METRISCH ARANDELA METRICO
19	339034X1		**6**	NUT METRIC	ECROU METRIQUE DADO METRICO	MUTTER METRISCH TUERCA METRICO
20	3783408M2		**1**	SUPPORT	SUPPORT SUPPORTO	LAGERUNG DISPOS.DE SOSTEN
21	3781374M93		**1**	FRAME	BATI TELAIO	RAHMEN BASTIDOR
22	3778240M92		**1**	STEP	MARCHEPIED GRADINO	TRITTBRETT ESCALON
23	3778337M91		**1**	STAIR	MARCHE SCALINO	TREPPE PELDANO

Cab Mountings And Step / Stairs
Fixation Cabine Et Marchepied
Befestigung Und Aufstieg
Montaggio Cabina E Gradini
Montantes Y Estribo

100-35

United States Only
Etats Unis Seulement
Vereinigten Staaten
Solo Per Stati Uniti
Estados Unidos Solamente

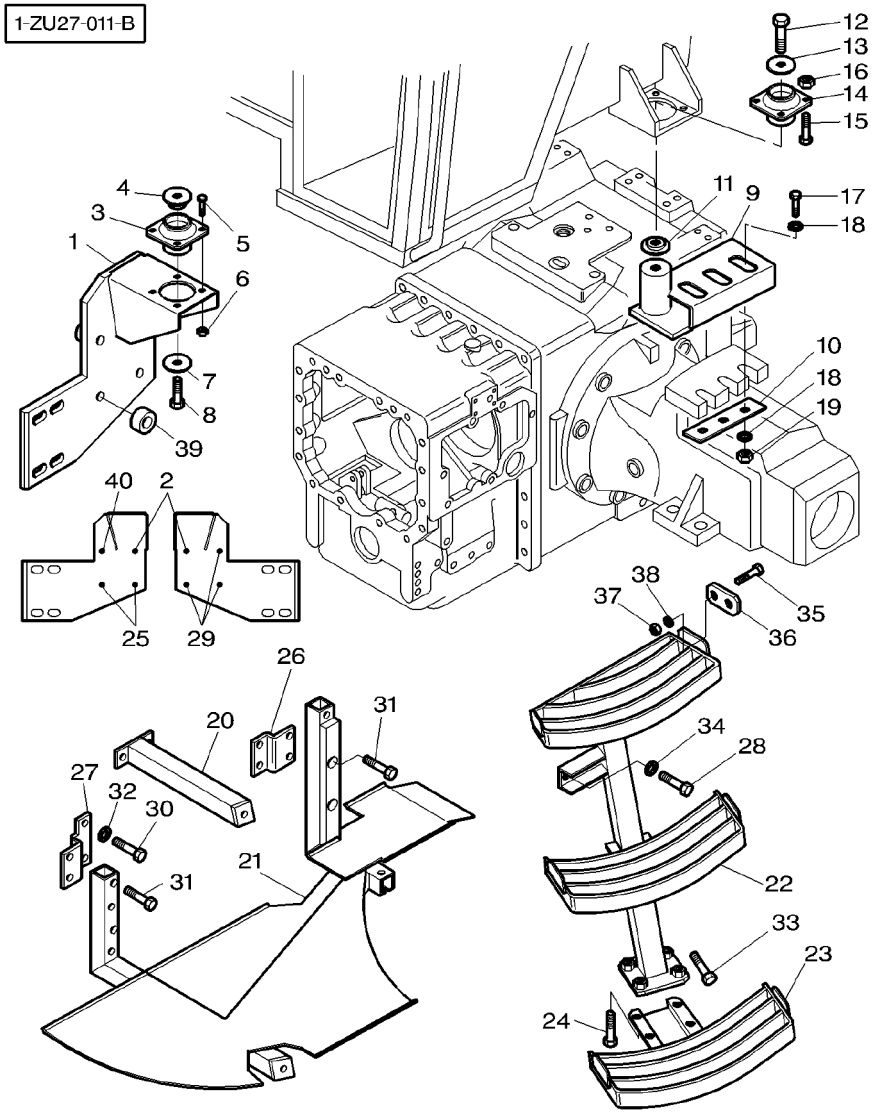

24	3009491X1	M10X20	**4**	BOLT METRIC	BOULON METRIQUE BULLONE METRICO	MASCH.SCHRB MET PERNO METRICO
25	339616X1	M16X120	**2**	BOLT METRIC	BOULON METRIQUE BULLONE METRICO	MASCH.SCHRB MET PERNO METRICO
26	3778294M2	[A]	**1**	PLATE	PLAQUE PIASTRA	PLATTE PLATO
27	3778295M2	[A]	**1**	PLATE	PLAQUE PIASTRA	PLATTE PLATO
28	**339275X1**	M16X35	**1**	SCREW METRIC	VIS METRIQUE VITE METRICA	SCHRAUBE METR TORNILLO METRICO
29	3019575X1		**3**	WASHER METRIC	RONDELLE METR. RONDELLA METRICO	SCHEIBE METRISCH ARANDELA METRICO
29	339616X1	M16X120	**3**	BOLT METRIC	BOULON METRIQUE BULLONE METRICO	MASCH.SCHRB MET PERNO METRICO
30	354710X1	[A] 3/4−10X50	**4**	SCREW UNC	VIS UNC VITE UNC	SCHRAUBE UNC TORNILLO UNC
31	390864X1	[A] M16X80	**4**	BOLT METRIC	BOULON METRIQUE BULLONE METRICO	MASCH.SCHRB MET PERNO METRICO
31	391889X1	[B] M16X70	**4**	SCREW	VIS VITE	SCHRAUBE TORNILLO
32	353775X1	[A]	**4**	WASHER	RONDELLE RONDELLA	UNTERLEGSCHEIBE ARANDELA
33	391889X1	[B] M16X70	**1**	SCREW	VIS VITE	SCHRAUBE TORNILLO
34	3019575X1		**1**	WASHER METRIC	RONDELLE METR. RONDELLA METRICO	SCHEIBE METRISCH ARANDELA METRICO
35	339123X1	M8X20 ➡ H259009	**2**	SCREW METRIC	VIS METRIQUE VITE METRICA	SCHRAUBE METR TORNILLO METRICO
36	3781189M1	➡ H259009	**1**	STOP	BUTEE STOP	ANSCHLAG PARO
37	339169X1	➡ H259009	**2**	NUT METRIC	ECROU METRIQUE DADO METRICO	MUTTER METRISCH TUERCA METRICO
38	390972X1	➡ H259009	**2**	WASHER METRIC	RONDELLE METR. RONDELLA METRICO	SCHEIBE METRISCH ARANDELA METRICO
39	3010942X1		**5**	SPACER	ENTRETOISE DISTANZIALE	ABSTANDSTUECK PIEZA DISTANCIA
40	3001915X1	M16X85	**1**	SCREW	VIS VITE	SCHRAUBE TORNILLO

[A] WITH DYNASHIFT
AVEC DYNASHIFT
MIT DYNASHIFT
CON DYNASHIFT
CON DYNASHIFT

[B] WITH FULL POWERSHIFT
AVEC FULL POWERSHIFT
MIT FULL POWERSHIFT
CON FULL POWERSHIFT
CON FULL POWERSHIFT

Cab Mountings And Step / Stairs
Fixation Cabine Et Marchepied
Befestigung Und Aufstieg
Montaggio Cabina E Gradini
Montantes Y Estribo

100-40

Without Additional Tank
Sans Reservoir Supplementaire
Ohne Zusastzlich Tank
Sensa Serbatoio Addizionale
Sin Tanque Supplementario

1-ZU27-006-A

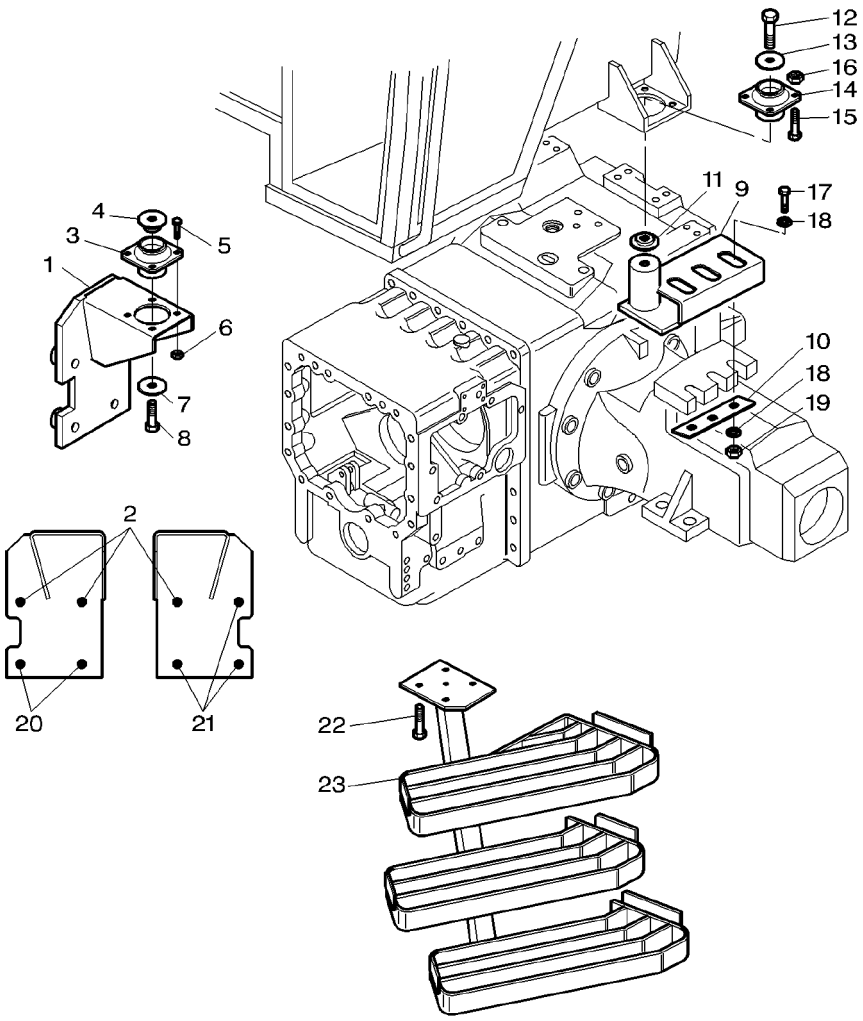

1	3777369M2	◀	1	SUPPORT	SUPPORT SUPPORTO LAGERUNG DISPOS.DE SOSTEN
1	3777370M2	▶	1	SUPPORT	SUPPORT SUPPORTO LAGERUNG DISPOS.DE SOSTEN
2	3001915X1	M16X85	3	SCREW	VIS VITE SCHRAUBE TORNILLO
3	3712693M1		2	VIBRATION MOUNT	SILENT BLOC ANTIVIBRANTE GUMMIMETALL MONTAJE ANTI-VIB
4	3388272M1		2	WASHER	RONDELLE RONDELLA UNTERLEGSCHEIBE ARANDELA
5	3009492X1	M10X25	7	SCREW METRIC	VIS METRIQUE VITE METRICA SCHRAUBE METR TORNILLO METRICO
5	3009493X1	M10X30	1	SCREW METRIC	VIS METRIQUE VITE METRICA SCHRAUBE METR TORNILLO METRICO
6	3009693X1		8	NUT METRIC	ECROU METRIQUE DADO METRICO MUTTER METRISCH TUERCA METRICO
7	3712809M2		2	SPACER	ENTRETOISE DISTANZIALE ABSTANDSTUECK PIEZA DISTANCIA
8	339805X1	M16X100	2	BOLT METRIC	BOULON METRIQUE BULLONE METRICO MASCH.SCHRB MET PERNO METRICO
9	3779767M1	◀	1	SUPPORT	SUPPORT SUPPORTO LAGERUNG DISPOS.DE SOSTEN
9	3779768M1	▶	1	SUPPORT	SUPPORT SUPPORTO LAGERUNG DISPOS.DE SOSTEN
10	3777417M1		2	PLATE	PLAQUE PIASTRA PLATTE PLATO
11	3388272M1		2	WASHER	RONDELLE RONDELLA UNTERLEGSCHEIBE ARANDELA
12	339805X1	M16X100	2	BOLT METRIC	BOULON METRIQUE BULLONE METRICO MASCH.SCHRB MET PERNO METRICO
13	3712809M2		2	SPACER	ENTRETOISE DISTANZIALE ABSTANDSTUECK PIEZA DISTANCIA
14	3715926M1		2	BUFFER	BUTOIR RESPINGENTE PUFFER PARACHOQUES
15	3009492X1	M10X25	8	SCREW METRIC	VIS METRIQUE VITE METRICA SCHRAUBE METR TORNILLO METRICO
16	3009693X1		8	NUT METRIC	ECROU METRIQUE DADO METRICO MUTTER METRISCH TUERCA METRICO
17	339805X1	M16X100	6	BOLT METRIC	BOULON METRIQUE BULLONE METRICO MASCH.SCHRB MET PERNO METRICO
18	3019575X1		12	WASHER METRIC	RONDELLE METR. RONDELLA METRICO SCHEIBE METRISCH ARANDELA METRICO
19	339034X1		6	NUT METRIC	ECROU METRIQUE DADO METRICO MUTTER METRISCH TUERCA METRICO
20	339805X1	M16X100	2	BOLT METRIC	BOULON METRIQUE BULLONE METRICO MASCH.SCHRB MET PERNO METRICO
21	3019575X1		3	WASHER METRIC	RONDELLE METR. RONDELLA METRICO SCHEIBE METRISCH ARANDELA METRICO
21	339805X1	M16X100	3	BOLT METRIC	BOULON METRIQUE BULLONE METRICO MASCH.SCHRB MET PERNO METRICO
22	3009493X1	M10X30	4	SCREW METRIC	VIS METRIQUE VITE METRICA SCHRAUBE METR TORNILLO METRICO

Cab Mountings And Step / Stairs
Fixation Cabine Et Marchepied
Befestigung Und Aufstieg
Montaggio Cabina E Gradini
Montantes Y Estribo

100-40

Without Additional Tank
Sans Reservoir Supplementaire
Ohne Zusastzlich Tank
Sensa Serbatoio Addizionale
Sin Tanque Supplementario

1-ZU27-006-A

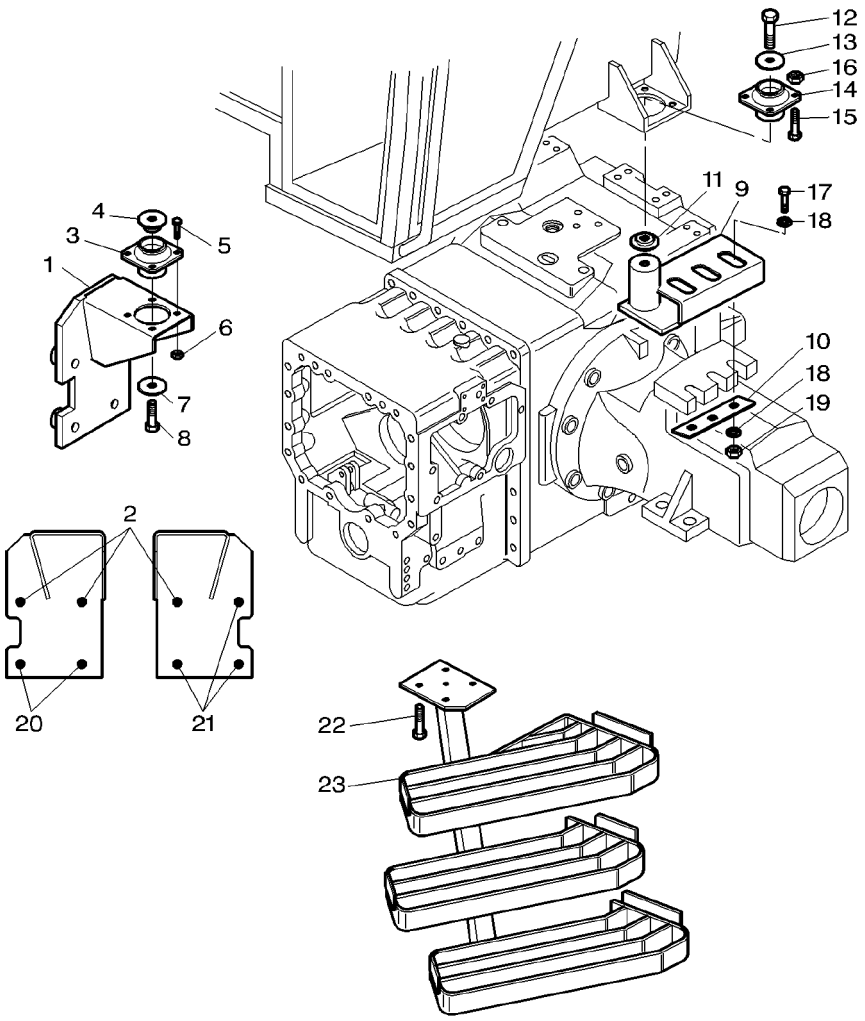

23	3714029M94	**1**	STEP	MARCHEPIED GRADINO	TRITTBRETT ESCALON

Footstep And Battery Box
Marchepieds Et Logement De Batterie
Trittberetter Und Batterie Lenkgehause
Pedana E Batteria Scatola
Estribos Y Batterie Carter

100-45

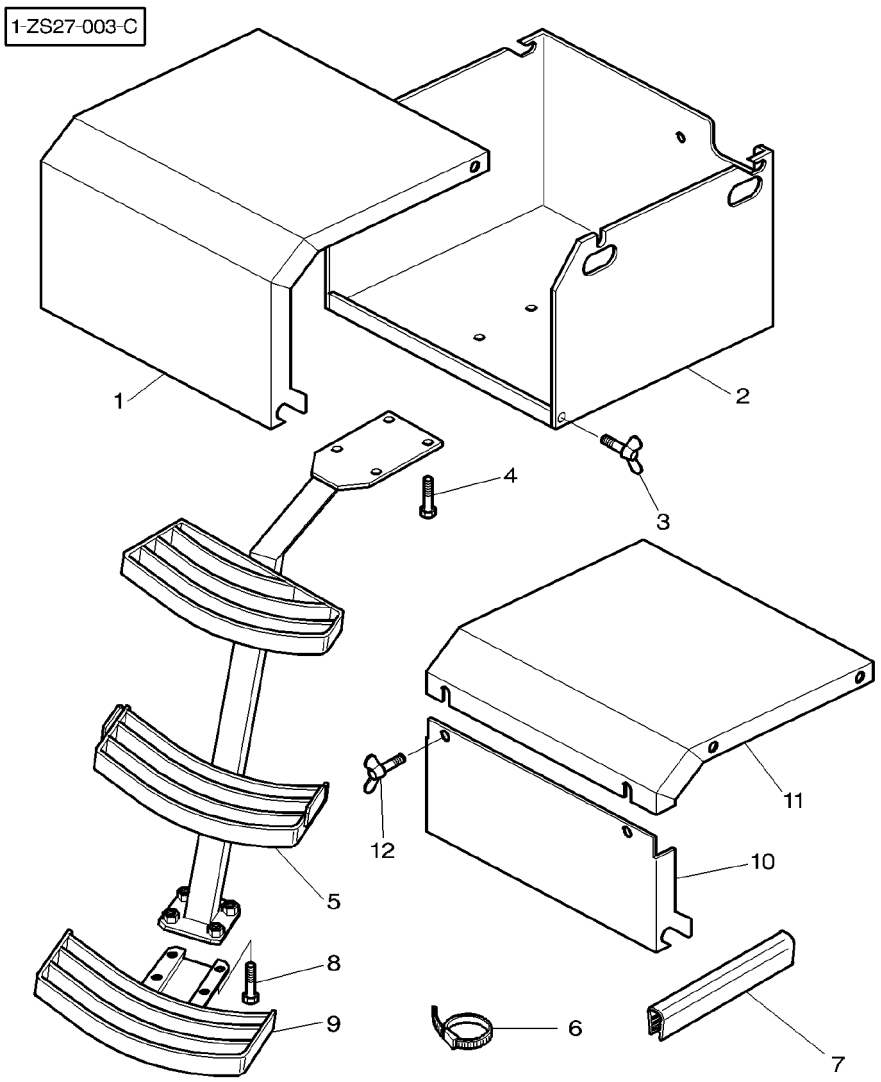

1	3782889M1	⇥ J137015	**1**	COVER	COUVERCLE COPERCHIO	DECKEL CUBIERTA
2	3782884M93		**1**	BATTERY BOX	COFFRE BATTERIE SCATOLA BATTERIA	BATTERIEKASTEN CAJA DE BATERIA
3	339107X1	M8X16	**2**	WINGBOLT	VIS A AILETTES BULLONE ALETTATO	FLUEGELSCHRAUBE PERNO DE ALETAS
4	3009491X1	M10X20	**4**	BOLT METRIC	BOULON METRIQUE BULLONE METRICO	MASCH.SCHRB MET PERNO METRICO
5	3783063M92	▶	**1**	STEP	MARCHEPIED GRADINO	TRITTBRETT ESCALON
6	3619622M1		**X**	CABLE TIE	ATTACHE CABLE FASCETTA CAVI	KABELBINDER ENLACE DE CABLE
7	1684844M1	◀▶ 80MM	**2**	SEAL	JOINT ETANCHEITE PARAOLIO	DICHTRING RETEN
8	3009491X1	M10X20	**4**	BOLT METRIC	BOULON METRIQUE BULLONE METRICO	MASCH.SCHRB MET PERNO METRICO
9	3778630M91	▶	**1**	STAIR	MARCHE SCALINO	TREPPE PELDANO
10	3784564M1	⇥ J137016	**1**	COVER	COUVERCLE COPERCHIO	DECKEL CUBIERTA
11	3784565M1	⇥ J137016	**1**	COVER	COUVERCLE COPERCHIO	DECKEL CUBIERTA
12	339107X1	⇥ J137016 M8X16	**2**	WINGBOLT	VIS A AILETTES BULLONE ALETTATO	FLUEGELSCHRAUBE PERNO DE ALETAS

Footstep And Battery Box
Marchepieds Et Logement De Batterie
Trittberetter Und Batterie Lenkgehause
Pedana E Batteria Scatola
Estribos Y Batterie Carter

100-50

Without Additional Tank
Sans Reservoir Supplementaire
Ohne Zusastzlich Tank
Sensa Serbatoio Addizionale
Sin Tanque Supplementario

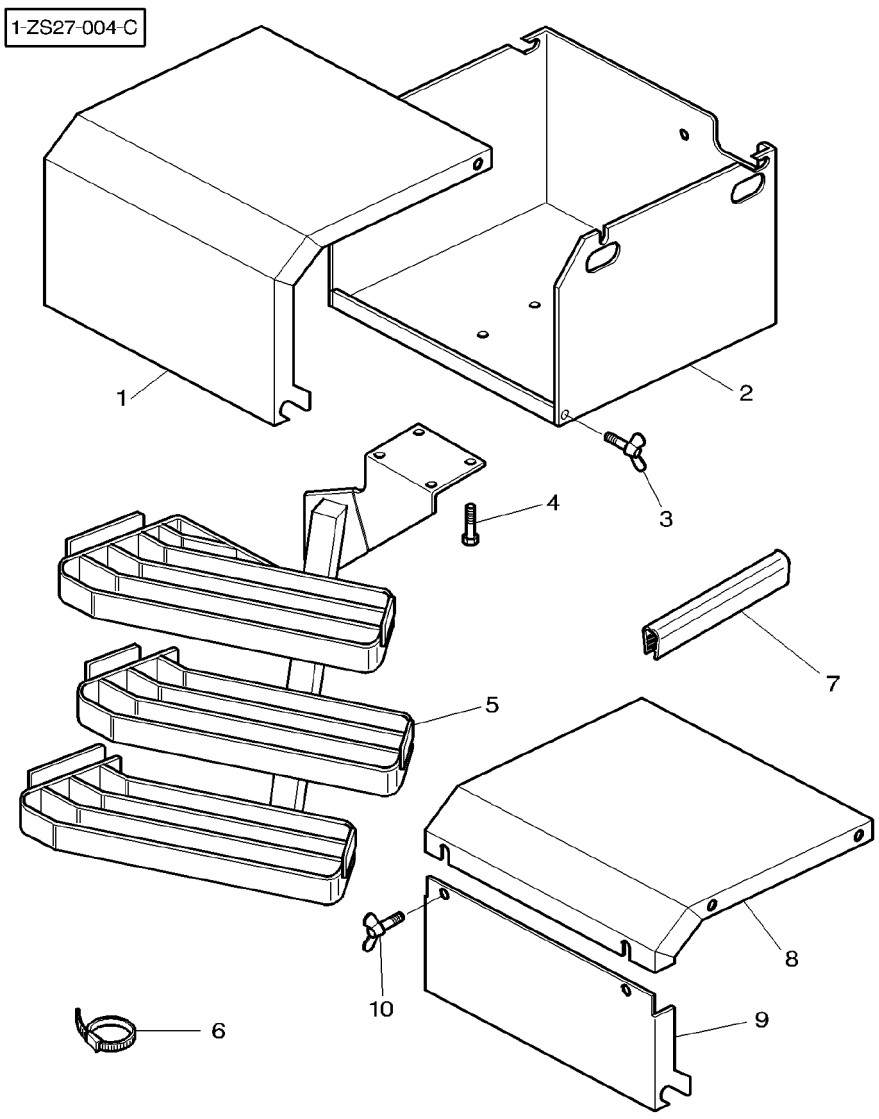

1	3782889M1	➡| J137015	**1**	COVER	COUVERCLE COPERCHIO	DECKEL CUBIERTA
2	3782884M93		**1**	BATTERY BOX	COFFRE BATTERIE SCATOLA BATTERIA	BATTERIEKASTEN CAJA DE BATERIA
3	339107X1	M8X16	**2**	WINGBOLT	VIS A AILETTES BULLONE ALETTATO	FLUEGELSCHRAUBE PERNO DE ALETAS
4	3009491X1	M10X20	**4**	BOLT METRIC	BOULON METRIQUE BULLONE METRICO	MASCH.SCHRB MET PERNO METRICO
5	3783076M91	▶	**1**	STEP	MARCHEPIED GRADINO	TRITTBRETT ESCALON
6	3619622M1		**X**	CABLE TIE	ATTACHE CABLE FASCETTA CAVI	KABELBINDER ENLACE DE CABLE
7	1684844M1	◀▶ 80MM	**2**	SEAL	JOINT ETANCHEITE PARAOLIO	DICHTRING RETEN
8	3784565M1	➡ J137016	**1**	COVER	COUVERCLE COPERCHIO	DECKEL CUBIERTA
9	3784564M1	➡ J137016	**1**	COVER	COUVERCLE COPERCHIO	DECKEL CUBIERTA
10	339107X1	➡ J137016 M8X16	**2**	WINGBOLT	VIS A AILETTES BULLONE ALETTATO	FLUEGELSCHRAUBE PERNO DE ALETAS

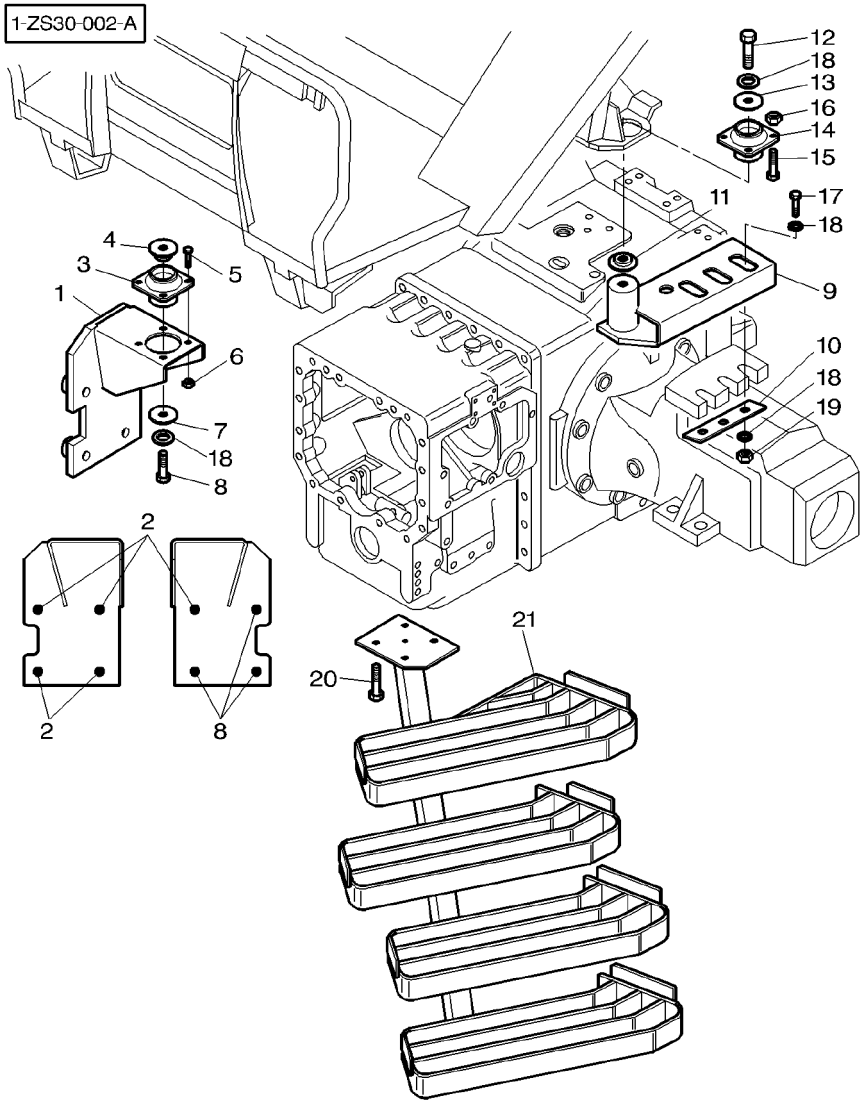

1	3777369M2	◀	**1**	SUPPORT	SUPPORT SUPPORTO
1	3777370M2	▶	**1**	SUPPORT	LAGERUNG DISPOS.DE SOSTEN SUPPORT SUPPORTO
2	3001915X1	M16X85	**5**	SCREW	LAGERUNG DISPOS.DE SOSTEN VIS VITE
3	3712693M1		**2**	VIBRATION MOUNT	SCHRAUBE TORNILLO SILENT BLOC ANTIVIBRANTE
4	3388272M1		**2**	WASHER	GUMMIMETALL MONTAJE ANTI-VIB RONDELLE RONDELLA
5	3009492X1	M10X25	**8**	SCREW METRIC	UNTERLEGSCHEIBE ARANDELA VIS METRIQUE VITE METRICA
6	3009693X1		**8**	NUT METRIC	SCHRAUBE METR TORNILLO METRICO ECROU METRIQUE DADO METRICO
7	3712809M2		**2**	SPACER	MUTTER METRISCH TUERCA METRICO ENTRETOISE DISTANZIALE
8	339805X1	M16X100	**5**	BOLT METRIC	ABSTANDSTUECK PIEZA DISTANCIA BOULON METRIQUE BULLONE METRICO
9	3782494M1	◀	**1**	SUPPORT	MASCH.SCHRB MET PERNO METRICO SUPPORT SUPPORTO
9	3782495M1	▶	**1**	SUPPORT	LAGERUNG DISPOS.DE SOSTEN SUPPORT SUPPORTO
10	3777417M1		**2**	PLATE	LAGERUNG DISPOS.DE SOSTEN PLAQUE PIASTRA
11	3388272M1		**2**	WASHER	PLATTE PLATO RONDELLE RONDELLA
12	339805X1	M16X100	**2**	BOLT METRIC	UNTERLEGSCHEIBE ARANDELA BOULON METRIQUE BULLONE METRICO
13	3712809M2		**2**	SPACER	MASCH.SCHRB MET PERNO METRICO ENTRETOISE DISTANZIALE
14	3715926M1		**2**	BUFFER	ABSTANDSTUECK PIEZA DISTANCIA BUTOIR RESPINGENTE
15	3009493X1	M10X30	**8**	SCREW METRIC	PUFFER PARACHOQUES VIS METRIQUE VITE METRICA
16	3009693X1		**8**	NUT METRIC	SCHRAUBE METR TORNILLO METRICO ECROU METRIQUE DADO METRICO
17	339805X1	M16X100	**6**	BOLT METRIC	MUTTER METRISCH TUERCA METRICO BOULON METRIQUE BULLONE METRICO
18	3019575X1		**16**	WASHER METRIC	MASCH.SCHRB MET PERNO METRICO RONDELLE METR. RONDELLA METRICO
19	339034X1		**6**	NUT METRIC	SCHEIBE METRISCH ARANDELA METRICO ECROU METRIQUE DADO METRICO
20	3009493X1	M10X30	**4**	SCREW METRIC	MUTTER METRISCH TUERCA METRICO VIS METRIQUE VITE METRICA
21	3783084M91	◀	**1**	STEP	SCHRAUBE METR TORNILLO METRICO MARCHEPIED GRADINO TRITTBRETT ESCALON

Tool Box
Boite A Outils
Werkzeugkasten
Cassetta Attrezz
Caja Herramienta

100-60

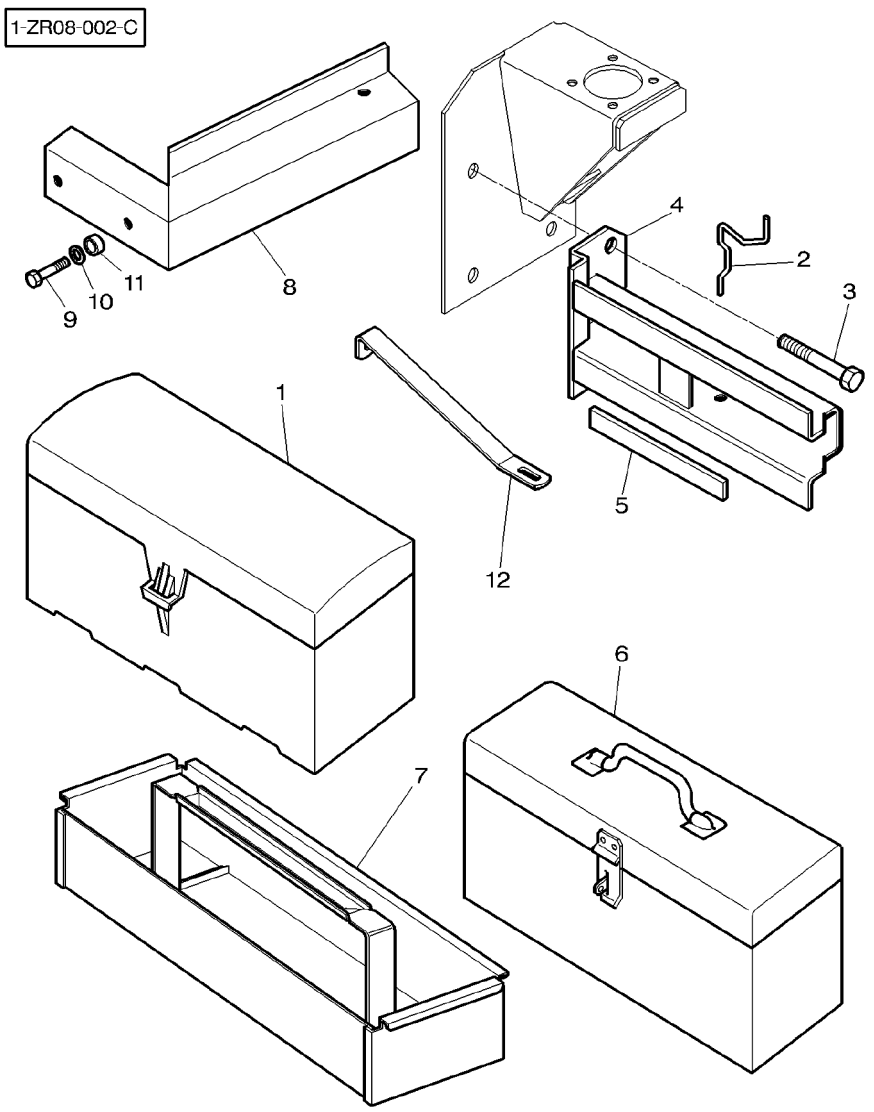

1	1696186M93	[B]	**1**	TOOL BOX	BOITE A OUTILS CASSETTA ATTREZZ	WERKZEUGKASTEN CAJA HERRAMIENTA
2	3580564M1		**1**	ECCENTRIC	EXCENTRIQUE ECCENTRICO	EXZENTER EXCENTRICA
3	391269X1		**X**	SCREW METRIC	VIS METRIQUE VITE METRICA	SCHRAUBE METR TORNILLO METRICO
4	3580565M97		**1**	SUPPORT	SUPPORT SUPPORTO	LAGERUNG DISPOS.DE SOSTEN
5	3580639M1		**1**	GASKET	JOINT GUARNIZIONE	DICHTSCHEIBE EMPAQUETADURA.
6	**3616340M1**	[A]	**1**	TOOL BOX	BOITE A OUTILS CASSETTA ATTREZZ	WERKZEUGKASTEN CAJA HERRAMIENTA
7	3778994M1		**1**	BOOT	COFFRE PARAPOLVERE	SCHUTZKAPPE PROTECCION
8	3782364M4		**1**	SUPPORT	SUPPORT SUPPORTO	LAGERUNG DISPOS.DE SOSTEN
9	339761X1	M8X25	**2**	SCREW METRIC	VIS METRIQUE VITE METRICA	SCHRAUBE METR TORNILLO METRICO
9	339010X1	M8X40	**1**	BOLT METRIC	BOULON METRIQUE BULLONE METRICO	MASCH.SCHRB MET PERNO METRICO
9	339337X1	M8X30	**1**	SCREW METRIC	VIS METRIQUE VITE METRICA	SCHRAUBE METR TORNILLO METRICO
10	390972X1		**2**	WASHER METRIC	RONDELLE METR. RONDELLA METRICO	SCHEIBE METRISCH ARANDELA METRICO
11	3580856M1	⧗ 6,1MM	**1**	SPACER	ENTRETOISE DISTANZIALE	ABSTANDSTUECK PIEZA DISTANCIA
11	3045014M2	⧗ 14,29MM	**1**	SPACER	ENTRETOISE DISTANZIALE	ABSTANDSTUECK PIEZA DISTANCIA
12	3783070M1		**1**	REINFORCEMENT	RENFORT RINFORZO	VERSTAERKUNG REFUERZO

[A] METAL
METALLIQUE
METALL
METALLICO
METALICO

[B] PLASTICS
PLASTIQUE
PLASTIKSTOFFE
MATERIE PLASTICHE
PLASTICO

Emblems
Emblemes
Firmenzeichen
Emblemi
Emblemas

100-65

1-ZR05-005-B

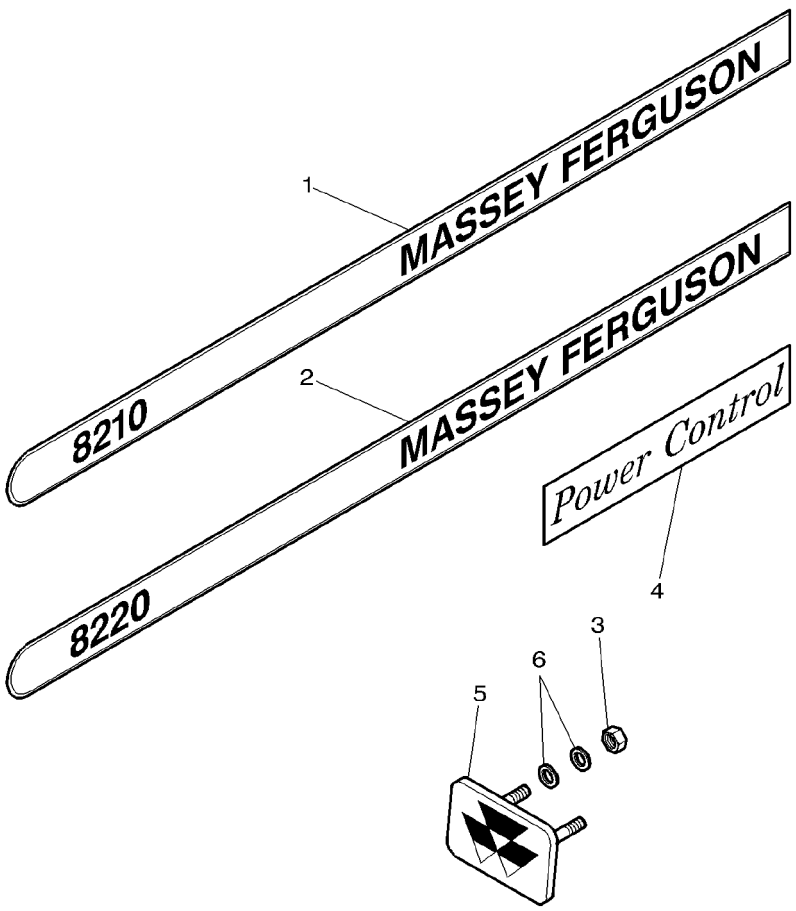

1	3781422M1	◀	M.F 8210	**1**	EMBLEM	EMBLEME EMBLEMA
1	3781427M1	▶	M.F 8210	**1**	EMBLEM	EMBLEME EMBLEMA
2	3781423M1	◀	M.F 8220	**1**	EMBLEM	EMBLEME EMBLEMA
2	3781428M1	▶	M.F 8220	**1**	EMBLEM	EMBLEME EMBLEMA
3	1441500X1	M6		**2**	LOCKNUT	ECROU BLOCAGE AUTOBLOCCANTE
4	3783415M1	[A]		**2**	DECAL	DECALCOMANIE DECALCOMANIA
5	3808163M91			**1**	BADGE	BADGE DISTINTIVO
6	390971X1			**2**	WASHER METRIC	RONDELLE METR. RONDELLA METRICO

		EMBLEM	EMBLEM
		EMBLEMA	EMBLEMA
		EMBLEM	EMBLEM
		EMBLEMA	EMBLEMA
		EMBLEM	EMBLEM
		EMBLEMA	EMBLEMA
		EMBLEM	EMBLEM
		EMBLEMA	EMBLEMA
		FLACHMUTTER	
		CONTRATUERCA	
		AUFKLEBER	
		CALCOMANIA	
		ABZEICHEN	
		DIVISA	
		SCHEIBE METRISCH	
		ARANDELA METRICO	

[A] WITH FULL POWERSHIFT
AVEC FULL POWERSHIFT
MIT FULL POWERSHIFT
CON FULL POWERSHIFT
CON FULL POWERSHIFT

Speed Charts
Tableaux Des Vitesses
Ganggeschwindigk
Tabelle Velocita
Cuadros De Velocidad

100-70

With Dynashift
Avec Dynashift
Mit Dynashift
Con Dynashift
Con Dynashift

1-ZR12-005-A

1

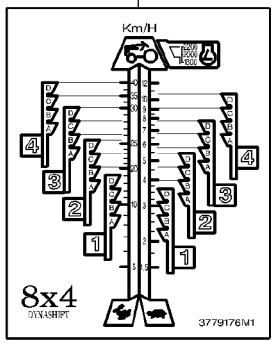

2

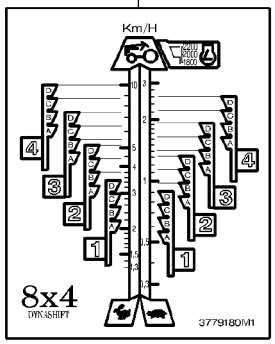

5

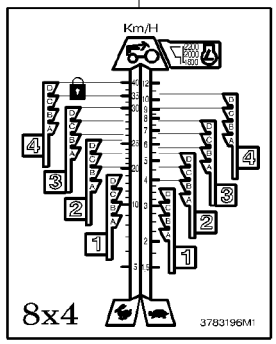

3

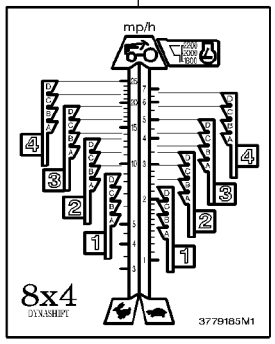

4

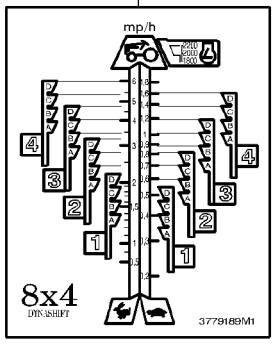

6

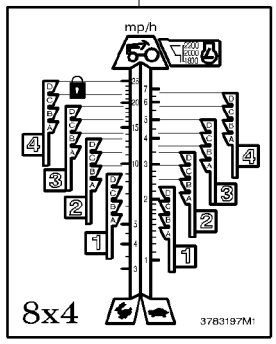

1	3779176M1	Km/H	**1** DECAL	DECALCOMANIE DECALCOMANIA	AUFKLEBER CALCOMANIA
2	3779180M1	Km/H	**1** DECAL	DECALCOMANIE DECALCOMANIA	AUFKLEBER CALCOMANIA
3	3779185M1	mp/h	**1** DECAL	DECALCOMANIE DECALCOMANIA	AUFKLEBER CALCOMANIA
4	3779189M1	mp/h	**1** DECAL	DECALCOMANIE DECALCOMANIA	AUFKLEBER CALCOMANIA
5	3783196M1	Km/H	**1** DECAL	DECALCOMANIE DECALCOMANIA	AUFKLEBER CALCOMANIA
6	3783197M1	mp/h	**1** DECAL	DECALCOMANIE DECALCOMANIA	AUFKLEBER CALCOMANIA

Speed Charts
Tableaux Des Vitesses
Ganggeschwindigk
Tabelle Velocita
Cuadros De Velocidad

100-75

With Full Powershift
Avec Full Powershift
Mit Full Powershift
Con Full Powershift
Con Full Powershift

1-ZR12-003-A

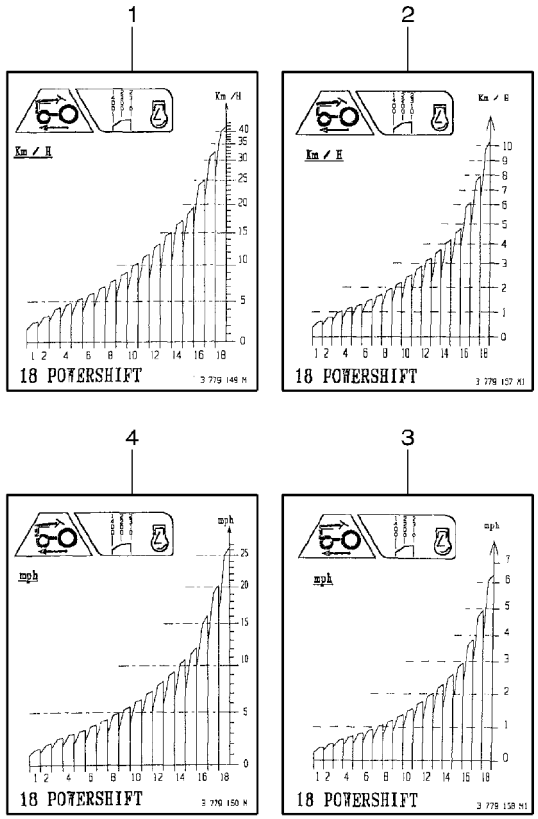

1	3779149M1	Km/H	**1** DECAL	DECALCOMANIE DECALCOMANIA	AUFKLEBER CALCOMANIA
2	3779157M1	Km/H	**1** DECAL	DECALCOMANIE DECALCOMANIA	AUFKLEBER CALCOMANIA
3	3779158M1	mp/h	**1** DECAL	DECALCOMANIE DECALCOMANIA	AUFKLEBER CALCOMANIA
4	3779150M1	mp/h	**1** DECAL	DECALCOMANIE DECALCOMANIA	AUFKLEBER CALCOMANIA

1-ZR13-011-B

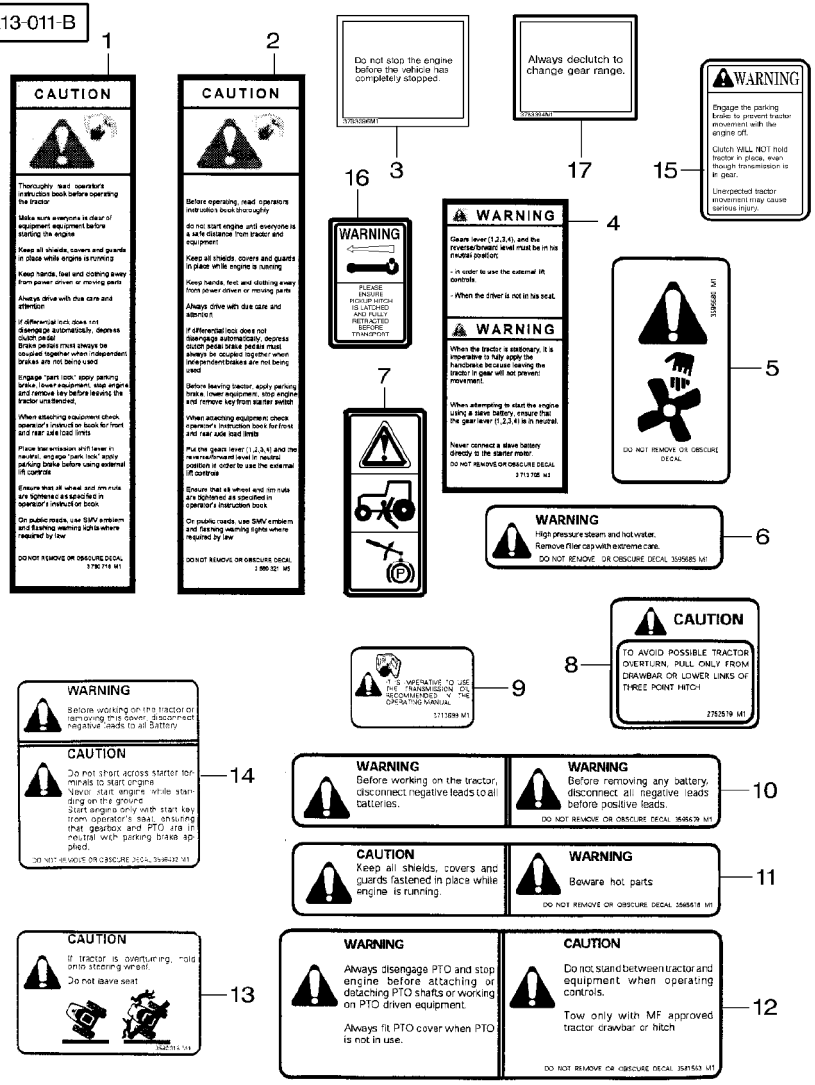

1	3780718M1	POWERSHIFT	**1**	DECAL	DECALCOMANIE DECALCOMANIA	AUFKLEBER CALCOMANIA
2	3580321M5	DYNASHIFT	**1**	DECAL	DECALCOMANIE DECALCOMANIA	AUFKLEBER CALCOMANIA
3	3783396M1		**1**	DECAL	DECALCOMANIE DECALCOMANIA	AUFKLEBER CALCOMANIA
4	3713705M3		**1**	DECAL	DECALCOMANIE DECALCOMANIA	AUFKLEBER CALCOMANIA
5	3595680M1		**1**	DECAL	DECALCOMANIE DECALCOMANIA	AUFKLEBER CALCOMANIA
6	3595685M1		**1**	DECAL	DECALCOMANIE DECALCOMANIA	AUFKLEBER CALCOMANIA
7	3782489M1		**1**	DECAL	DECALCOMANIE DECALCOMANIA	AUFKLEBER CALCOMANIA
8	2752579M1		**1**	DECAL	DECALCOMANIE DECALCOMANIA	AUFKLEBER CALCOMANIA
9	3713699M1		**1**	DECAL	DECALCOMANIE DECALCOMANIA	AUFKLEBER CALCOMANIA
10	3595679M1		**1**	DECAL	DECALCOMANIE DECALCOMANIA	AUFKLEBER CALCOMANIA
11	3595678M1		**1**	DECAL	DECALCOMANIE DECALCOMANIA	AUFKLEBER CALCOMANIA
12	3581563M1		**1**	DECAL	DECALCOMANIE DECALCOMANIA	AUFKLEBER CALCOMANIA
13	3580315M1		**1**	DECAL	DECALCOMANIE DECALCOMANIA	AUFKLEBER CALCOMANIA
14	3596432M1		**1**	DECAL	DECALCOMANIE DECALCOMANIA	AUFKLEBER CALCOMANIA
15	3777017M2		**1**	DECAL	DECALCOMANIE DECALCOMANIA	AUFKLEBER CALCOMANIA
16	3781401M1		**1**	DECAL	DECALCOMANIE DECALCOMANIA	AUFKLEBER CALCOMANIA
17	3783394M1	[A]	**1**	DECAL	DECALCOMANIE DECALCOMANIA	AUFKLEBER CALCOMANIA

[A] WITH POWER SHUTTLE
AVEC INVERSEUR SOUS COUPLE
MIT UNTER DREHMOMENT
CON SOTTO COPPIA
CON INVERSOR SUB PAR

1-ZR13-005-A

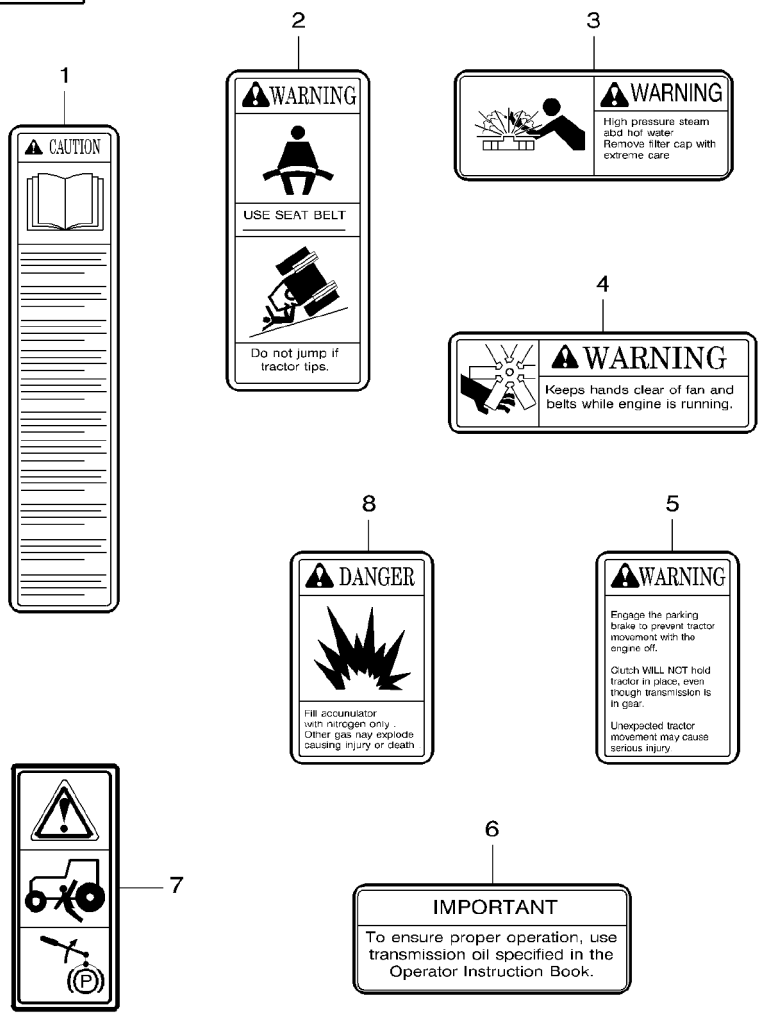

1	3808550M2	**1**	DECAL	DECALCOMANIE DECALCOMANIA	AUFKLEBER CALCOMANIA
2	3808567M2	**1**	DECAL	DECALCOMANIE DECALCOMANIA	AUFKLEBER CALCOMANIA
3	3808561M2	**1**	DECAL	DECALCOMANIE DECALCOMANIA	AUFKLEBER CALCOMANIA
4	3777018M1	**2**	DECAL	DECALCOMANIE DECALCOMANIA	AUFKLEBER CALCOMANIA
5	3777017M2	**1**	DECAL	DECALCOMANIE DECALCOMANIA	AUFKLEBER CALCOMANIA
6	3777020M1	**1**	DECAL	DECALCOMANIE DECALCOMANIA	AUFKLEBER CALCOMANIA
7	3782489M1	**1**	DECAL	DECALCOMANIE DECALCOMANIA	AUFKLEBER CALCOMANIA
8	3777021M2	**1**	DECAL	DECALCOMANIE DECALCOMANIA	AUFKLEBER CALCOMANIA

1-ZR13-006-A

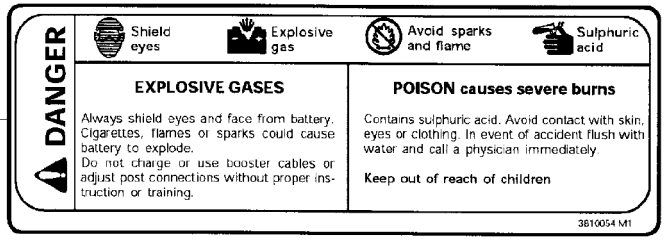

1

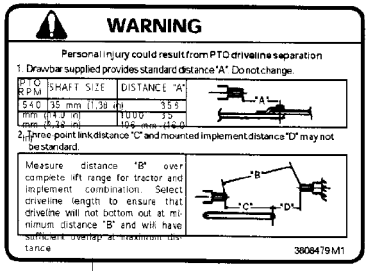

5

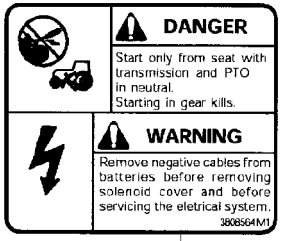

2

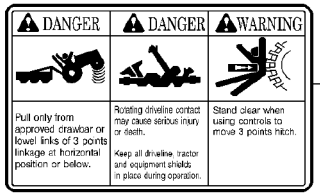

3



4

1	3810054M1	**2**	DECAL	DECALCOMANIE DECALCOMANIA	AUFKLEBER CALCOMANIA
2	3808564M1	**1**	DECAL	DECALCOMANIE DECALCOMANIA	AUFKLEBER CALCOMANIA
3	3808558M2	**2**	DECAL	DECALCOMANIE DECALCOMANIA	AUFKLEBER CALCOMANIA
4	3777019M1	**2**	DECAL	DECALCOMANIE DECALCOMANIA	AUFKLEBER CALCOMANIA
5	3808479M1	**2**	DECAL	DECALCOMANIE DECALCOMANIA	AUFKLEBER CALCOMANIA

Decals **Decalcomanies** **Abziehbilder** **Decalcomanie** **Calcomanias**	**Safety** **Securite** **Sicherheit** **Sicurezza** **Seguridad**	**100-95**

Platform U.S.A.
Plateforme U.S.A.
Plattform U.S.A.
Piattaforma U.S.A.
Plataforma U.S.A.

1-ZR13-014-A

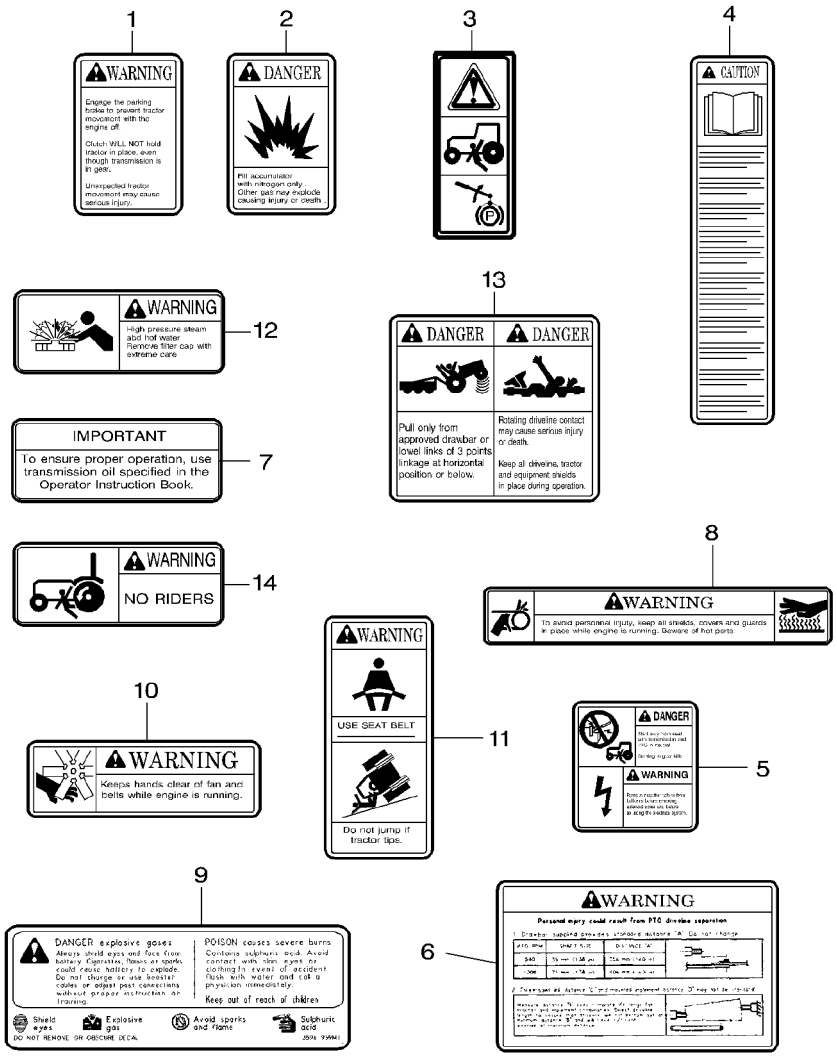

1	3777017M2	**1**	DECAL	DECALCOMANIE DECALCOMANIA	AUFKLEBER CALCOMANIA
2	3777021M2	**1**	DECAL	DECALCOMANIE DECALCOMANIA	AUFKLEBER CALCOMANIA
3	3782489M1	**2**	DECAL	DECALCOMANIE DECALCOMANIA	AUFKLEBER CALCOMANIA
4	3808550M2	**2**	DECAL	DECALCOMANIE DECALCOMANIA	AUFKLEBER CALCOMANIA
5	3808564M1	**1**	DECAL	DECALCOMANIE DECALCOMANIA	AUFKLEBER CALCOMANIA
6	3808479M1	**2**	DECAL	DECALCOMANIE DECALCOMANIA	AUFKLEBER CALCOMANIA
7	3777020M1	**1**	DECAL	DECALCOMANIE DECALCOMANIA	AUFKLEBER CALCOMANIA
8	3777019M1	**2**	DECAL	DECALCOMANIE DECALCOMANIA	AUFKLEBER CALCOMANIA
9	3810054M1	**2**	DECAL	DECALCOMANIE DECALCOMANIA	AUFKLEBER CALCOMANIA
10	3777018M1	**2**	DECAL	DECALCOMANIE DECALCOMANIA	AUFKLEBER CALCOMANIA
11	3808567M2	**1**	DECAL	DECALCOMANIE DECALCOMANIA	AUFKLEBER CALCOMANIA
12	3808561M2	**1**	DECAL	DECALCOMANIE DECALCOMANIA	AUFKLEBER CALCOMANIA
13	3779407M1	**1**	DECAL	DECALCOMANIE DECALCOMANIA	AUFKLEBER CALCOMANIA
14	3814929M2	**2**	DECAL	DECALCOMANIE DECALCOMANIA	AUFKLEBER CALCOMANIA

1-ZR13-003-B

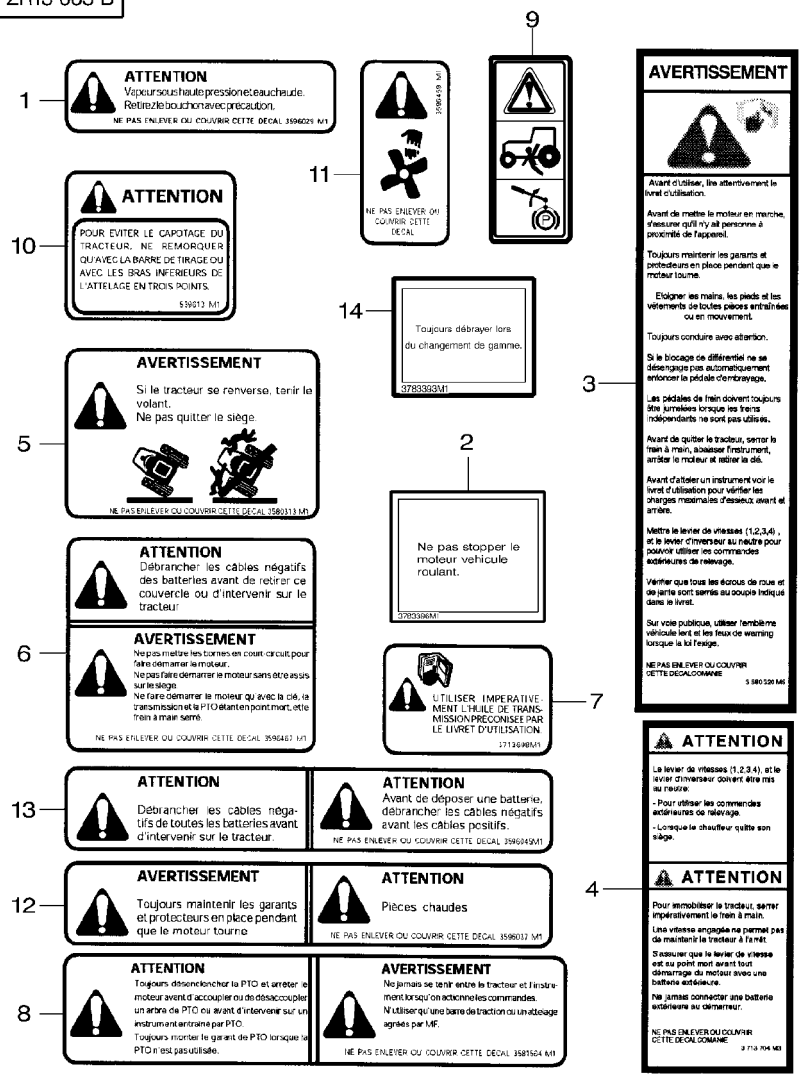

1	3596029M1	**1**	DECAL	DECALCOMANIE DECALCOMANIA	AUFKLEBER CALCOMANIA
2	3783395M1	**1**	DECAL	DECALCOMANIE DECALCOMANIA	AUFKLEBER CALCOMANIA
3	3580320M5	**1**	DECAL	DECALCOMANIE DECALCOMANIA	AUFKLEBER CALCOMANIA
4	3713704M3	**1**	DECAL	DECALCOMANIE DECALCOMANIA	AUFKLEBER CALCOMANIA
5	3580313M1	**1**	DECAL	DECALCOMANIE DECALCOMANIA	AUFKLEBER CALCOMANIA
6	3596467M1	**1**	DECAL	DECALCOMANIE DECALCOMANIA	AUFKLEBER CALCOMANIA
7	3713698M1	**1**	DECAL	DECALCOMANIE DECALCOMANIA	AUFKLEBER CALCOMANIA
8	3581564M1	**1**	DECAL	DECALCOMANIE DECALCOMANIA	AUFKLEBER CALCOMANIA
9	3782489M1	**1**	DECAL	DECALCOMANIE DECALCOMANIA	AUFKLEBER CALCOMANIA
10	539613M1	**1**	DECAL	DECALCOMANIE DECALCOMANIA	AUFKLEBER CALCOMANIA
11	3596459M1	**1**	DECAL	DECALCOMANIE DECALCOMANIA	AUFKLEBER CALCOMANIA
12	3596037M1	**1**	DECAL	DECALCOMANIE DECALCOMANIA	AUFKLEBER CALCOMANIA
13	3596045M1	**1**	DECAL	DECALCOMANIE DECALCOMANIA	AUFKLEBER CALCOMANIA
14	3783393M1 [A]	**1**	DECAL	DECALCOMANIE DECALCOMANIA	AUFKLEBER CALCOMANIA

[A] WITH POWER SHUTTLE
AVEC INVERSEUR SOUS COUPLE
MIT UNTER DREHMOMENT
CON SOTTO COPPIA
CON INVERSOR SUB PAR

1-ZR13-010-B

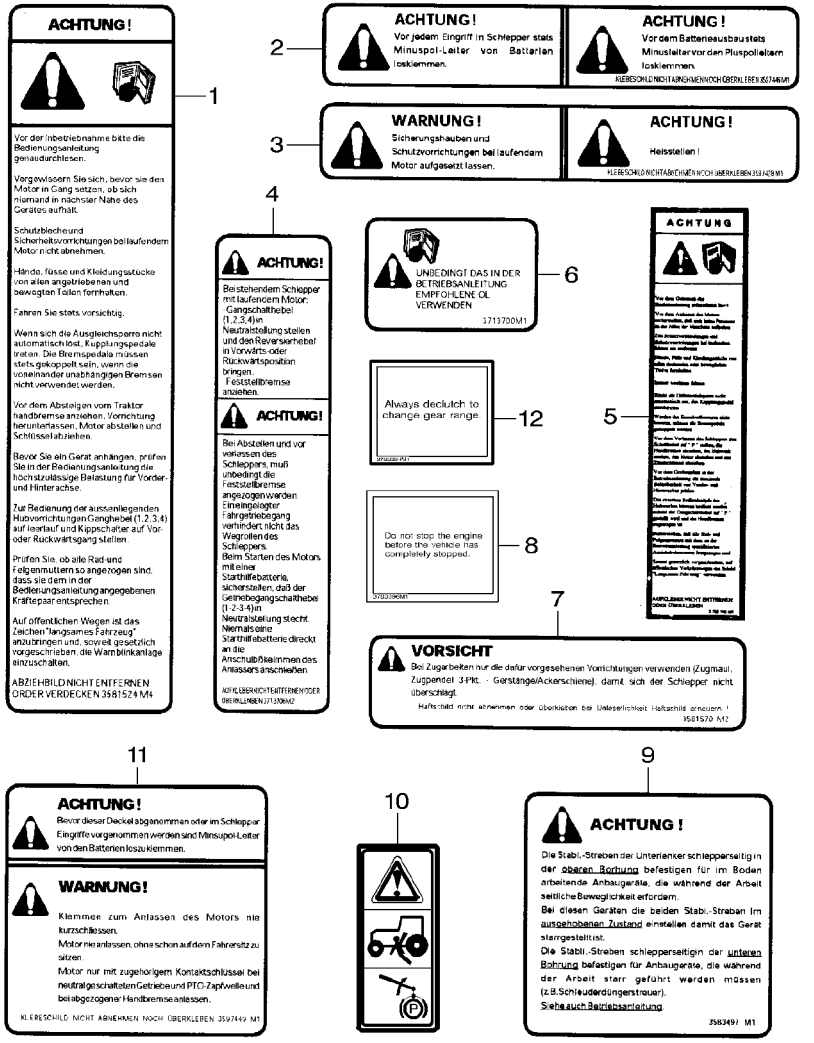

1	3581524M5	**1** DECAL	DECALCOMANIE DECALCOMANIA	AUFKLEBER CALCOMANIA
2	3597446M1	**1** DECAL	DECALCOMANIE DECALCOMANIA	AUFKLEBER CALCOMANIA
3	3597428M1	**1** DECAL	DECALCOMANIE DECALCOMANIA	AUFKLEBER CALCOMANIA
4	3713706M3	**1** DECAL	DECALCOMANIE DECALCOMANIA	AUFKLEBER CALCOMANIA
5	3780746M1	**1** DECAL	DECALCOMANIE DECALCOMANIA	AUFKLEBER CALCOMANIA
6	3713700M1	**1** DECAL	DECALCOMANIE DECALCOMANIA	AUFKLEBER CALCOMANIA
7	3581570M2	**1** DECAL	DECALCOMANIE DECALCOMANIA	AUFKLEBER CALCOMANIA
8	3783396M1	**1** DECAL	DECALCOMANIE DECALCOMANIA	AUFKLEBER CALCOMANIA
9	3583497M1	**1** DECAL	DECALCOMANIE DECALCOMANIA	AUFKLEBER CALCOMANIA
10	3782489M1	**1** DECAL	DECALCOMANIE DECALCOMANIA	AUFKLEBER CALCOMANIA
11	3597449M1	**1** DECAL	DECALCOMANIE DECALCOMANIA	AUFKLEBER CALCOMANIA
12	3783394M1	**1** DECAL	DECALCOMANIE DECALCOMANIA	AUFKLEBER CALCOMANIA

1-ZR13-008-B

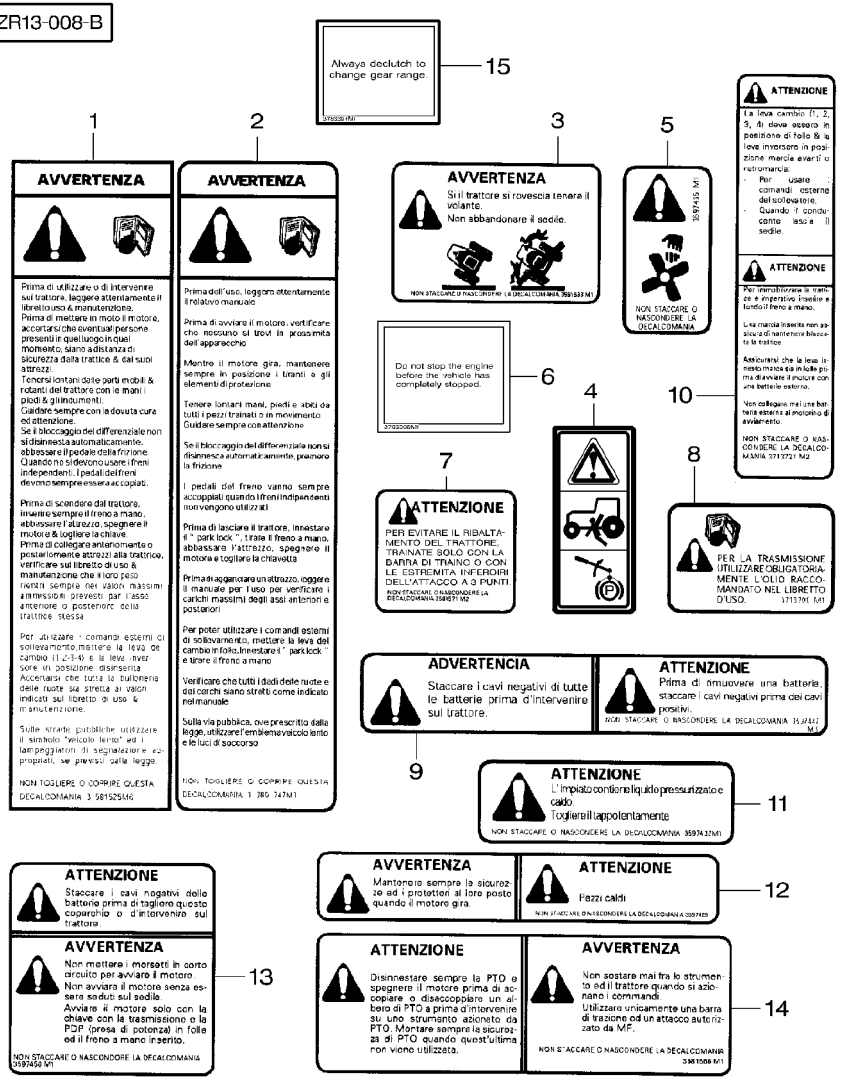

1	3581525M6	DYNASHIFT	1 DECAL	DECALCOMANIE DECALCOMANIA	AUFKLEBER CALCOMANIA
2	3780747M1	POWERSHIFT	1 DECAL	DECALCOMANIE DECALCOMANIA	AUFKLEBER CALCOMANIA
3	3581533M2		1 DECAL	DECALCOMANIE DECALCOMANIA	AUFKLEBER CALCOMANIA
4	3782489M1		1 DECAL	DECALCOMANIE DECALCOMANIA	AUFKLEBER CALCOMANIA
5	3597435M1		1 DECAL	DECALCOMANIE DECALCOMANIA	AUFKLEBER CALCOMANIA
6	3783396M1		1 DECAL	DECALCOMANIE DECALCOMANIA	AUFKLEBER CALCOMANIA
7	3581571M2		1 DECAL	DECALCOMANIE DECALCOMANIA	AUFKLEBER CALCOMANIA
8	3713701M1		1 DECAL	DECALCOMANIE DECALCOMANIA	AUFKLEBER CALCOMANIA
9	3597447M1		1 DECAL	DECALCOMANIE DECALCOMANIA	AUFKLEBER CALCOMANIA
10	3713721M3		1 DECAL	DECALCOMANIE DECALCOMANIA	AUFKLEBER CALCOMANIA
11	3597432M1		1 DECAL	DECALCOMANIE DECALCOMANIA	AUFKLEBER CALCOMANIA
12	3597429M1		1 DECAL	DECALCOMANIE DECALCOMANIA	AUFKLEBER CALCOMANIA
13	3597450M1		1 DECAL	DECALCOMANIE DECALCOMANIA	AUFKLEBER CALCOMANIA
14	3581566M1		1 DECAL	DECALCOMANIE DECALCOMANIA	AUFKLEBER CALCOMANIA
15	3783394M1		1 DECAL	DECALCOMANIE DECALCOMANIA	AUFKLEBER CALCOMANIA

1-ZR13-009-B

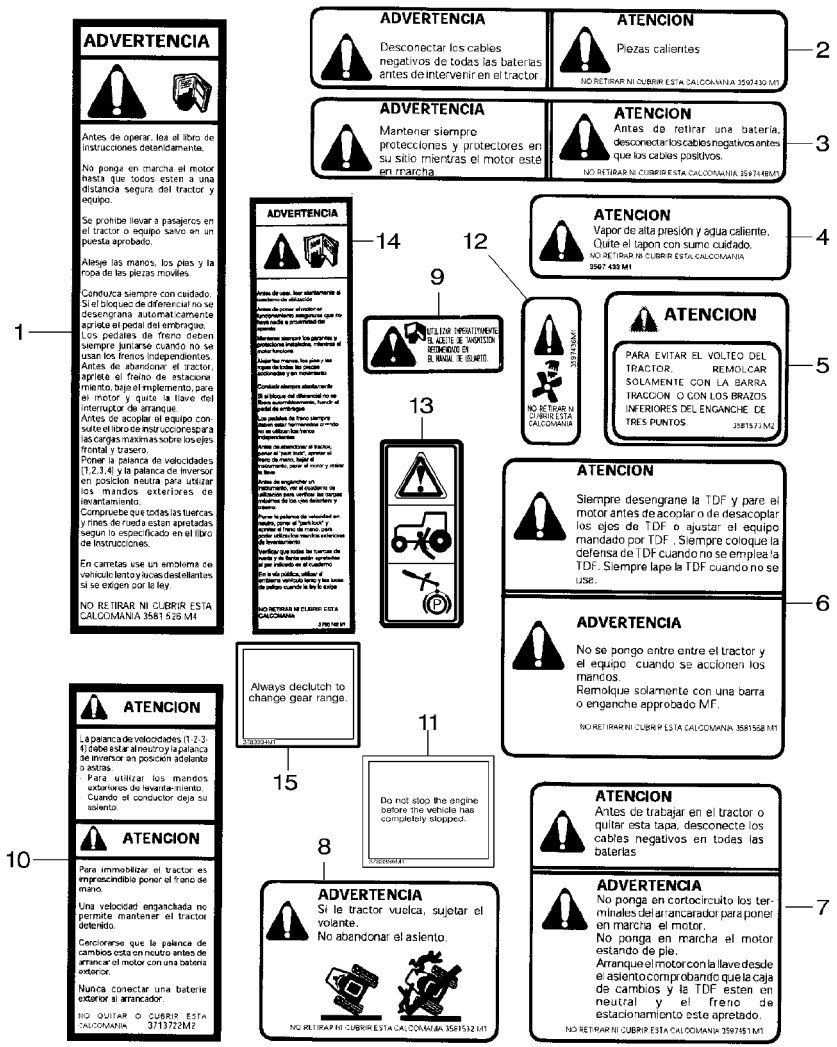

1	3581526M4	DYNASHIFT	1	DECAL	DECALCOMANIE DECALCOMANIA	AUFKLEBER CALCOMANIA
2	3597430M1		1	DECAL	DECALCOMANIE DECALCOMANIA	AUFKLEBER CALCOMANIA
3	3597448M1		1	DECAL	DECALCOMANIE DECALCOMANIA	AUFKLEBER CALCOMANIA
4	3597433M1		1	DECAL	DECALCOMANIE DECALCOMANIA	AUFKLEBER CALCOMANIA
5	3581573M2		1	DECAL	DECALCOMANIE DECALCOMANIA	AUFKLEBER CALCOMANIA
6	3581568M1		1	DECAL	DECALCOMANIE DECALCOMANIA	AUFKLEBER CALCOMANIA
7	3597451M1		1	DECAL	DECALCOMANIE DECALCOMANIA	AUFKLEBER CALCOMANIA
8	3581532M1		1	DECAL	DECALCOMANIE DECALCOMANIA	AUFKLEBER CALCOMANIA
9	3713702M1		1	DECAL	DECALCOMANIE DECALCOMANIA	AUFKLEBER CALCOMANIA
10	3713722M3		1	DECAL	DECALCOMANIE DECALCOMANIA	AUFKLEBER CALCOMANIA
11	3783396M1		1	DECAL	DECALCOMANIE DECALCOMANIA	AUFKLEBER CALCOMANIA
12	3597436M1		1	DECAL	DECALCOMANIE DECALCOMANIA	AUFKLEBER CALCOMANIA
13	3782489M1		1	DECAL	DECALCOMANIE DECALCOMANIA	AUFKLEBER CALCOMANIA
14	3780742M1		1	DECAL	DECALCOMANIE DECALCOMANIA	AUFKLEBER CALCOMANIA
15	3783394M1	[A]	1	DECAL	DECALCOMANIE DECALCOMANIA	AUFKLEBER CALCOMANIA

[A] WITH POWER SHUTTLE
AVEC INVERSEUR SOUS COUPLE
MIT UNTER DREHMOMENT
CON SOTTO COPPIA
CON INVERSOR SUB PAR

1-ZR13-012-B

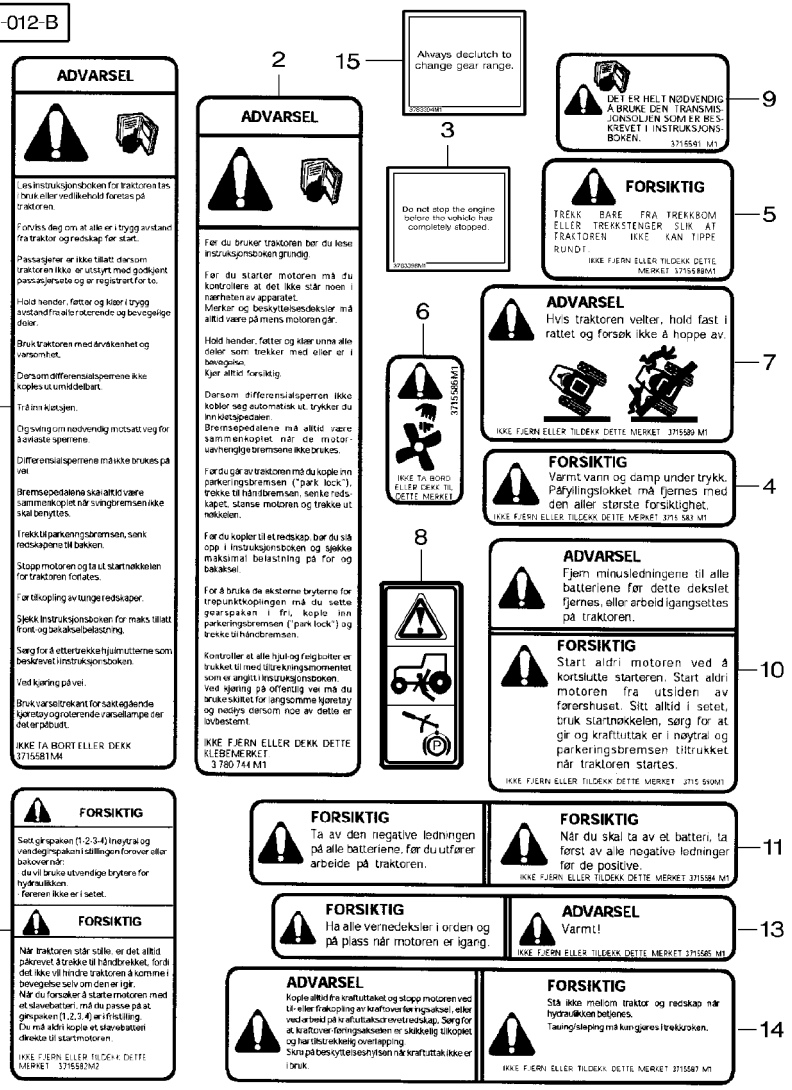

1	3715581M3	DYNASHIFT	1	DECAL	DECALCOMANIE DECALCOMANIA	AUFKLEBER CALCOMANIA
2	3780744M1	POWERSHIFT	1	DECAL	DECALCOMANIE DECALCOMANIA	AUFKLEBER CALCOMANIA
3	3783396M1		1	DECAL	DECALCOMANIE DECALCOMANIA	AUFKLEBER CALCOMANIA
4	3715583M1		1	DECAL	DECALCOMANIE DECALCOMANIA	AUFKLEBER CALCOMANIA
5	3715588M1		1	DECAL	DECALCOMANIE DECALCOMANIA	AUFKLEBER CALCOMANIA
6	3715586M1		1	DECAL	DECALCOMANIE DECALCOMANIA	AUFKLEBER CALCOMANIA
7	3715589M1		1	DECAL	DECALCOMANIE DECALCOMANIA	AUFKLEBER CALCOMANIA
8	3782489M1		1	DECAL	DECALCOMANIE DECALCOMANIA	AUFKLEBER CALCOMANIA
9	3715591M1		1	DECAL	DECALCOMANIE DECALCOMANIA	AUFKLEBER CALCOMANIA
10	3715590M1		1	DECAL	DECALCOMANIE DECALCOMANIA	AUFKLEBER CALCOMANIA
11	3715584M1		1	DECAL	DECALCOMANIE DECALCOMANIA	AUFKLEBER CALCOMANIA
12	3715582M3		1	DECAL	DECALCOMANIE DECALCOMANIA	AUFKLEBER CALCOMANIA
13	3715585M1		1	DECAL	DECALCOMANIE DECALCOMANIA	AUFKLEBER CALCOMANIA
14	3715587M1		1	DECAL	DECALCOMANIE DECALCOMANIA	AUFKLEBER CALCOMANIA
15	3783394M1	[A]	1	DECAL	DECALCOMANIE DECALCOMANIA	AUFKLEBER CALCOMANIA

[A] WITH POWER SHUTTLE
AVEC INVERSEUR SOUS COUPLE
MIT UNTER DREHMOMENT
CON SOTTO COPPIA
CON INVERSOR SUB PAR

1-ZR13-007-B

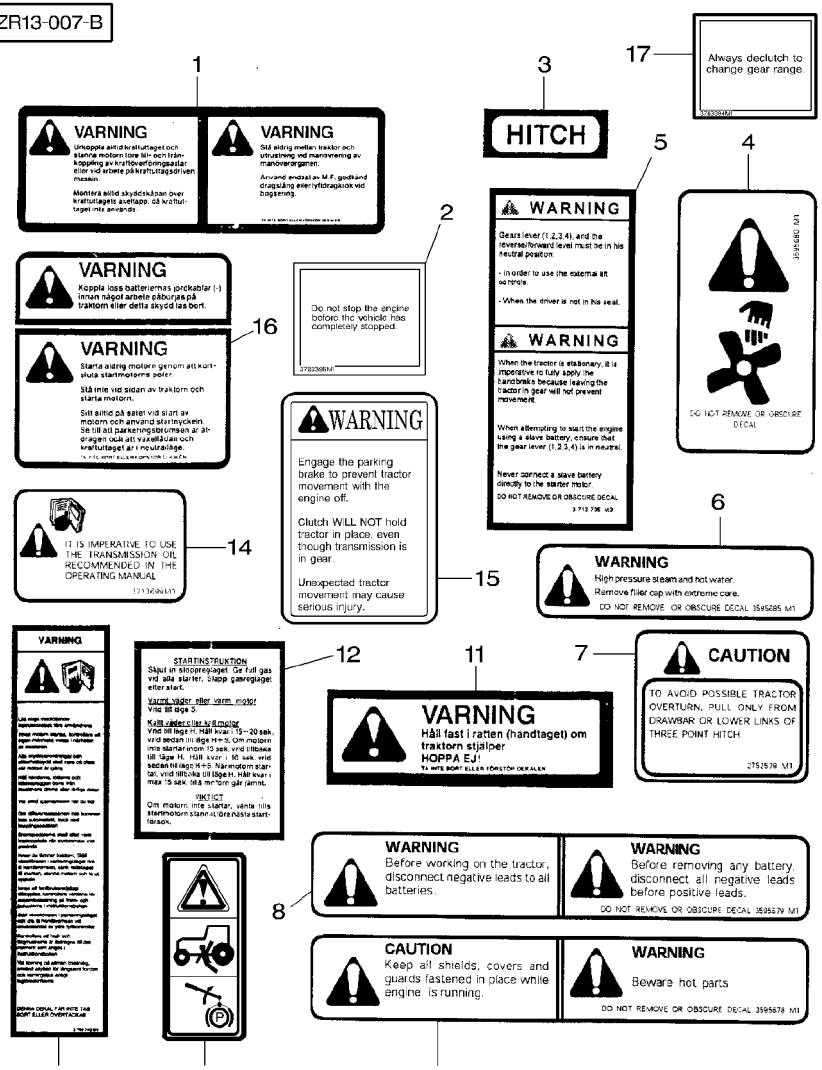

1	3618264M1		1	DECAL	DECALCOMANIE DECALCOMANIA
2	3783396M1		1	DECAL	DECALCOMANIE DECALCOMANIA
3	3618263M1		1	DECAL	DECALCOMANIE DECALCOMANIA
4	3595680M1		1	DECAL	DECALCOMANIE DECALCOMANIA
5	3713705M3		1	DECAL	DECALCOMANIE DECALCOMANIA
6	3595685M1		1	DECAL	DECALCOMANIE DECALCOMANIA
7	2752579M1		1	DECAL	DECALCOMANIE DECALCOMANIA
8	3595679M1		1	DECAL	DECALCOMANIE DECALCOMANIA
9	3595678M1		1	DECAL	DECALCOMANIE DECALCOMANIA
10	3782489M1		1	DECAL	DECALCOMANIE DECALCOMANIA
11	3618260M1		1	DECAL	DECALCOMANIE DECALCOMANIA
12	3618261M1		1	DECAL	DECALCOMANIE DECALCOMANIA
13	3780743M1		1	DECAL	DECALCOMANIE DECALCOMANIA
14	3713699M1		1	DECAL	DECALCOMANIE DECALCOMANIA
15	3777017M2		1	DECAL	DECALCOMANIE DECALCOMANIA
16	3618262M1		1	DECAL	DECALCOMANIE DECALCOMANIA
17	3783394M1	[A]	1	DECAL	DECALCOMANIE DECALCOMANIA

[A] WITH POWER SHUTTLE
AVEC INVERSEUR SOUS COUPLE
MIT UNTER DREHMOMENT
CON SOTTO COPPIA
CON INVERSOR SUB PAR

1-ZR13-013-B

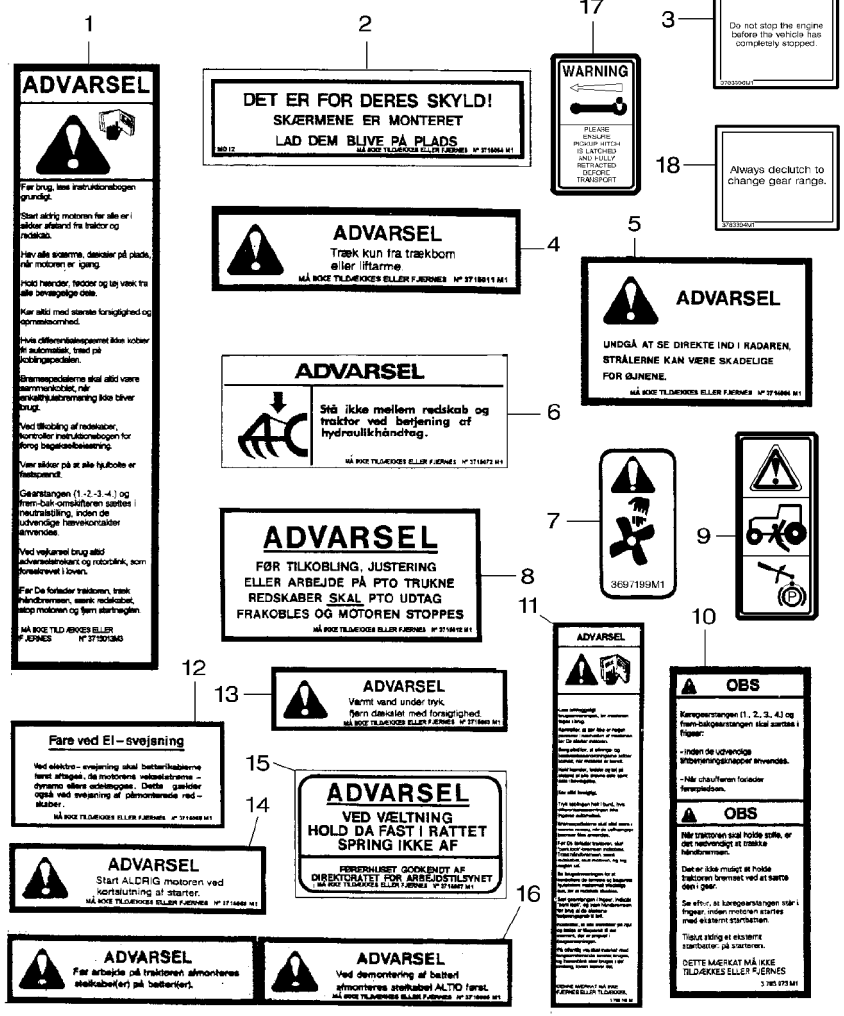

1	3715013M2		1	DECAL	DECALCOMANIE DECALCOMANIA
2	3715064M1		1	DECAL	DECALCOMANIE DECALCOMANIA
3	3783396M1		1	DECAL	DECALCOMANIE DECALCOMANIA
4	3715011M1		1	DECAL	DECALCOMANIE DECALCOMANIA
5	3714996M1		1	DECAL	DECALCOMANIE DECALCOMANIA
6	3715072M1		1	DECAL	DECALCOMANIE DECALCOMANIA
7	3697199M1		1	DECAL	DECALCOMANIE DECALCOMANIA
8	3715012M1		1	DECAL	DECALCOMANIE DECALCOMANIA
9	3782489M1		1	DECAL	DECALCOMANIE DECALCOMANIA
10	3783973M1		1	DECAL	DECALCOMANIE DECALCOMANIA
11	3780745M1		1	DECAL	DECALCOMANIE DECALCOMANIA
12	3715068M1		1	DECAL	DECALCOMANIE DECALCOMANIA
13	3715063M1		1	DECAL	DECALCOMANIE DECALCOMANIA
14	3715069M1		1	DECAL	DECALCOMANIE DECALCOMANIA
15	3715067M1		1	DECAL	DECALCOMANIE DECALCOMANIA
16	3715065M1		1	DECAL	DECALCOMANIE DECALCOMANIA
17	3781401M1		1	DECAL	DECALCOMANIE DECALCOMANIA
18	3783394M1	[A]	1	DECAL	DECALCOMANIE DECALCOMANIA

[A] WITH POWER SHUTTLE
AVEC INVERSEUR SOUS COUPLE
MIT UNTER DREHMOMENT
CON SOTTO COPPIA
CON INVERSOR SUB PAR

Decals	Safety
Decalcomanies	Securite
Abziehbilder	Sicherheit
Decalcomanie	Sicurezza
Calcomanias	Seguridad

100-135

For Russian Market Only
Pour Marche Russe Seulement
Nur Fuer Russland
Solo Per Mercato Russia
Solamente Para El Mercado Rusia

1-ZR13-004-A

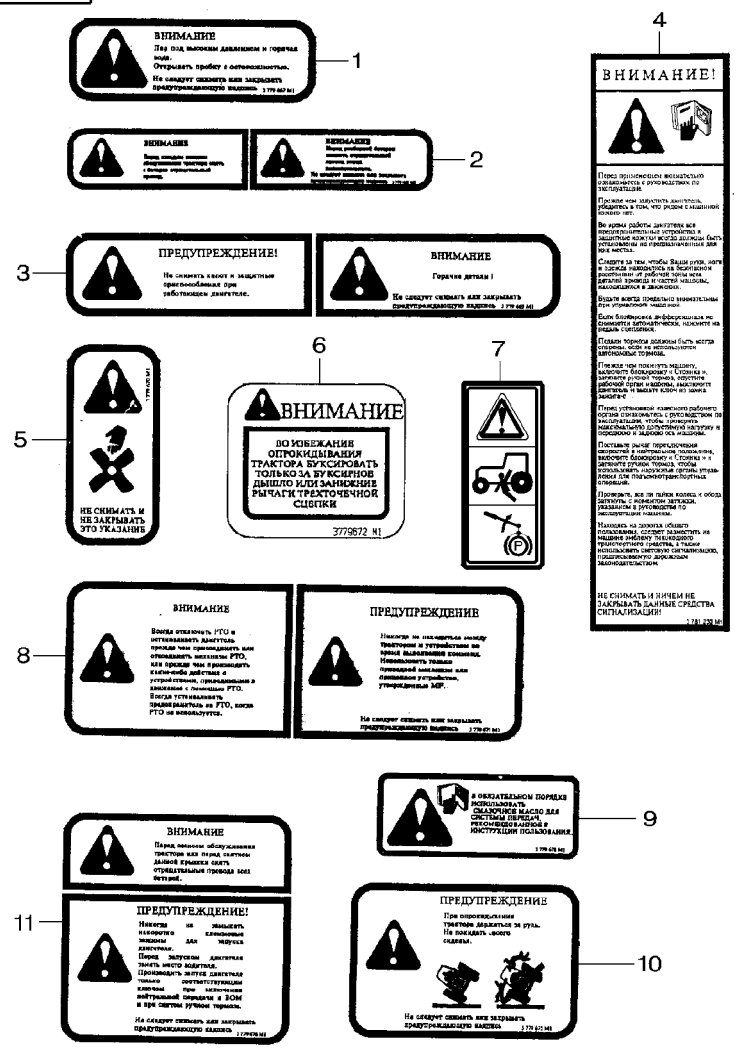

1	3779667M1	**1**	DECAL	DECALCOMANIE DECALCOMANIA	AUFKLEBER CALCOMANIA
2	3779668M1	**1**	DECAL	DECALCOMANIE DECALCOMANIA	AUFKLEBER CALCOMANIA
3	3779669M1	**1**	DECAL	DECALCOMANIE DECALCOMANIA	AUFKLEBER CALCOMANIA
4	3781230M1	**1**	DECAL	DECALCOMANIE DECALCOMANIA	AUFKLEBER CALCOMANIA
5	3779670M1	**1**	DECAL	DECALCOMANIE DECALCOMANIA	AUFKLEBER CALCOMANIA
6	3779672M1	**1**	DECAL	DECALCOMANIE DECALCOMANIA	AUFKLEBER CALCOMANIA
7	3782489M1	**1**	DECAL	DECALCOMANIE DECALCOMANIA	AUFKLEBER CALCOMANIA
8	3779671M1	**1**	DECAL	DECALCOMANIE DECALCOMANIA	AUFKLEBER CALCOMANIA
9	3779678M1	**1**	DECAL	DECALCOMANIE DECALCOMANIA	AUFKLEBER CALCOMANIA
10	3779675M1	**1**	DECAL	DECALCOMANIE DECALCOMANIA	AUFKLEBER CALCOMANIA
11	3779676M1	**1**	DECAL	DECALCOMANIE DECALCOMANIA	AUFKLEBER CALCOMANIA

1-ZR06-002-B

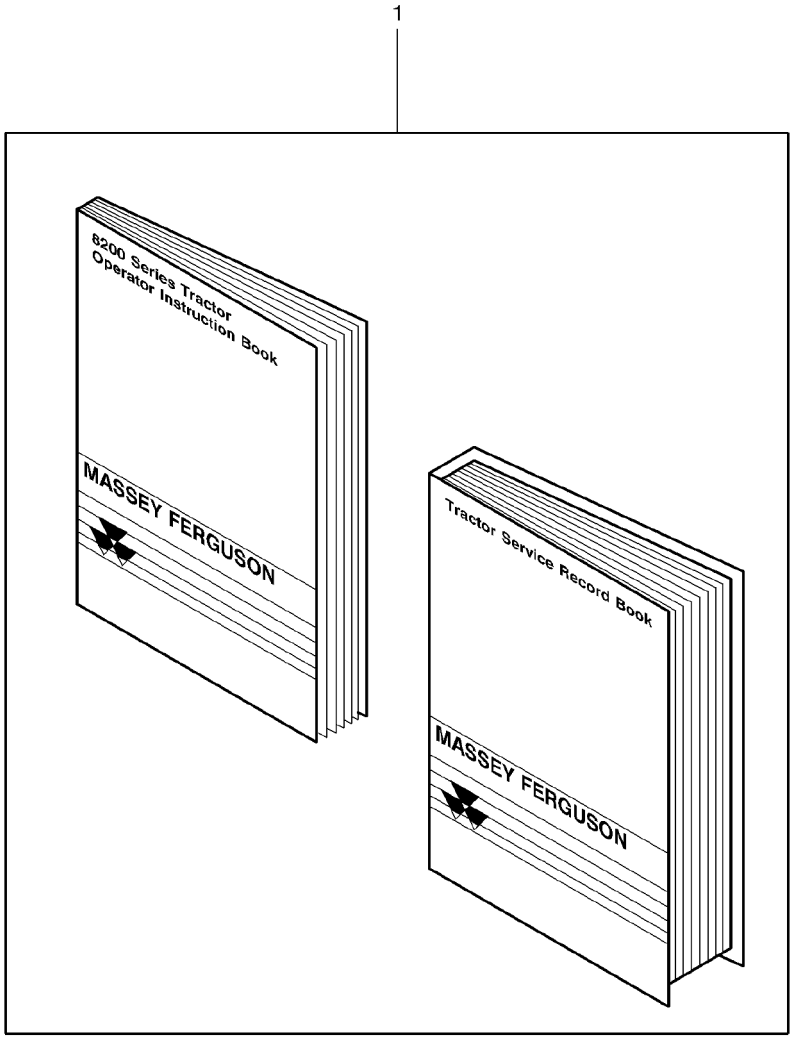

1	3784145M91	FRENCH	**1**	INSTRUCTION BOOK	GUIDEUTILISATION MANUALE ISTRUZI.	BETRIEBSANLEITG. MANUAL SERVICIO
1	3784146M91	ENGLISH	**1**	INSTRUCTION BOOK	GUIDEUTILISATION MANUALE ISTRUZI.	BETRIEBSANLEITG. MANUAL SERVICIO
1	3784147M91	(US) ENGLISH	**1**	INSTRUCTION BOOK	GUIDEUTILISATION MANUALE ISTRUZI.	BETRIEBSANLEITG. MANUAL SERVICIO
1	3784148M91	GERMAN	**1**	INSTRUCTION BOOK	GUIDEUTILISATION MANUALE ISTRUZI.	BETRIEBSANLEITG. MANUAL SERVICIO
1	3784149M91	SPANISH	**1**	INSTRUCTION BOOK	GUIDEUTILISATION MANUALE ISTRUZI.	BETRIEBSANLEITG. MANUAL SERVICIO
1	3784150M91	ITALIAN	**1**	INSTRUCTION BOOK	GUIDEUTILISATION MANUALE ISTRUZI.	BETRIEBSANLEITG. MANUAL SERVICIO
1	3784151M91	DANISH	**1**	INSTRUCTION BOOK	GUIDEUTILISATION MANUALE ISTRUZI.	BETRIEBSANLEITG. MANUAL SERVICIO
1	3784152M91	NORWEGIAN	**1**	INSTRUCTION BOOK	GUIDEUTILISATION MANUALE ISTRUZI.	BETRIEBSANLEITG. MANUAL SERVICIO
1	3784153M91	SWEDISH	**1**	INSTRUCTION BOOK	GUIDEUTILISATION MANUALE ISTRUZI.	BETRIEBSANLEITG. MANUAL SERVICIO
1	3784154M91	RUSSIAN	**1**	INSTRUCTION BOOK	GUIDEUTILISATION MANUALE ISTRUZI.	BETRIEBSANLEITG. MANUAL SERVICIO

110

Tractor Cab
Cabine Tracteur
Schlepperkabine
Cabina Trattore
Cabina Tractor

110-5

1-ZU03-010-A

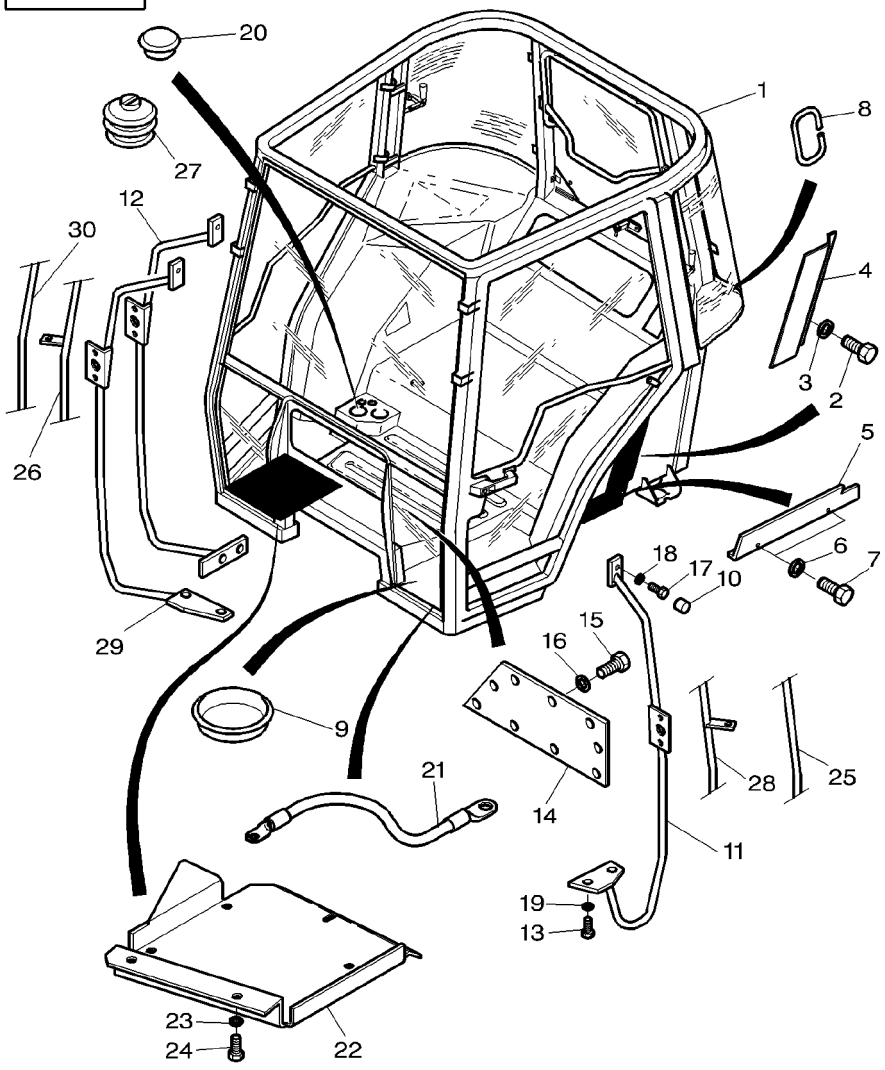

1	3779192M93		
2	339123X1	M8X20	
3	390972X1	∅ 9MM	
4	3713290M1	▶ ▲	
4	3713289M1	◀ ▲	
5	3713292M1	▶ ▼	
5	3713291M1	◀ ▼	
6	390971X1	M6	
7	391074X1	M6X12	
8	3714681M1	◀▶ 150MM	
9	3902363M1	∅ 20MM	
10	3616277M1		
11	3780049M91	[A] ◀	
12	3780653M91	▶ J004003	
13	3009493X1	M8X30	
14	3778052M1	1	
15	3010775X1	1 CBLX M6X25 ⇔ 3903188M1	
16	390971X1	1	
17	339228X1	M8X12	
18	22428X		
19	385362X1		
20	3782487M1	∅ 29MM	
20	3782486M1	H140028 ∅ 50MM	
21	3779046M2	[A] ◀▶ 550MM	
22	3782614M3		
23	391038X1		

1	CAB	CABINE CABINA	KABINE CABINA
4	SCREW METRIC	VIS METRIQUE VITE METRICA	SCHRAUBE METR TORNILLO METRICO
4	WASHER METRIC	RONDELLE METR. RONDELLA METRICO	SCHEIBE METRISCH ARANDELA METRICO
1	COWL	GARANT CAPPOTTATURA	AUFSATZ CAPERUZA
1	COWL	GARANT CAPPOTTATURA	AUFSATZ CAPERUZA
1	COWL	GARANT CAPPOTTATURA	AUFSATZ CAPERUZA
1	COWL	GARANT CAPPOTTATURA	AUFSATZ CAPERUZA
4	WASHER METRIC	RONDELLE METR. RONDELLA METRICO	SCHEIBE METRISCH ARANDELA METRICO
4	SCREW METRIC	VIS METRIQUE VITE METRICA	SCHRAUBE METR TORNILLO METRICO
1	PROFILE	PROFILE PROFILO	PROFIL PERFIL
1	PLUG	BOUCHON TAPPO	VERSCHL.STOPFEN TAPON
2	HELMET	CAPUCHON CASCO	SCHUTZHELM CASCO
1	GUIDEWAY	RAMBARDE ROTAIA	FUEHRUNGSSCHIENE RIEL DE GUIA
1	GUIDEWAY	RAMBARDE ROTAIA	FUEHRUNGSSCHIENE RIEL DE GUIA
2	SCREW METRIC	VIS METRIQUE VITE METRICA	SCHRAUBE METR TORNILLO METRICO
1	INSPECTION COVER	COUVERCLE VISITE COP DI CONTROLLO	SCHAULOCHDECKEL TAPA INSPECCION
9	SCREW	VIS VITE	SCHRAUBE TORNILLO
9	WASHER METRIC	RONDELLE METR. RONDELLA METRICO	SCHEIBE METRISCH ARANDELA METRICO
2	SCREW METRIC	VIS METRIQUE VITE METRICA	SCHRAUBE METR TORNILLO METRICO
2	LOCK WASHER	RONDELLE FREIN ROSETTA ELASTICA	FEDERRING ARANDELA GROWER
2	WASHER METRIC	RONDELLE METR. RONDELLA METRICO	SCHEIBE METRISCH ARANDELA METRICO
1	PLUG	BOUCHON TAPPO	VERSCHL.STOPFEN TAPON
1	PLUG	BOUCHON TAPPO	VERSCHL.STOPFEN TAPON
1	WIRE	FIL FILO DI FERRO	DRAHT HILO
1	COVER	COUVERCLE COPERCHIO	DECKEL CUBIERTA
3	WASHER METRIC	RONDELLE METR. RONDELLA METRICO	SCHEIBE METRISCH ARANDELA METRICO

Tractor Cab
Cabine Tracteur
Schlepperkabine
Cabina Trattore
Cabina Tractor

110-5

1-ZU03-010-A

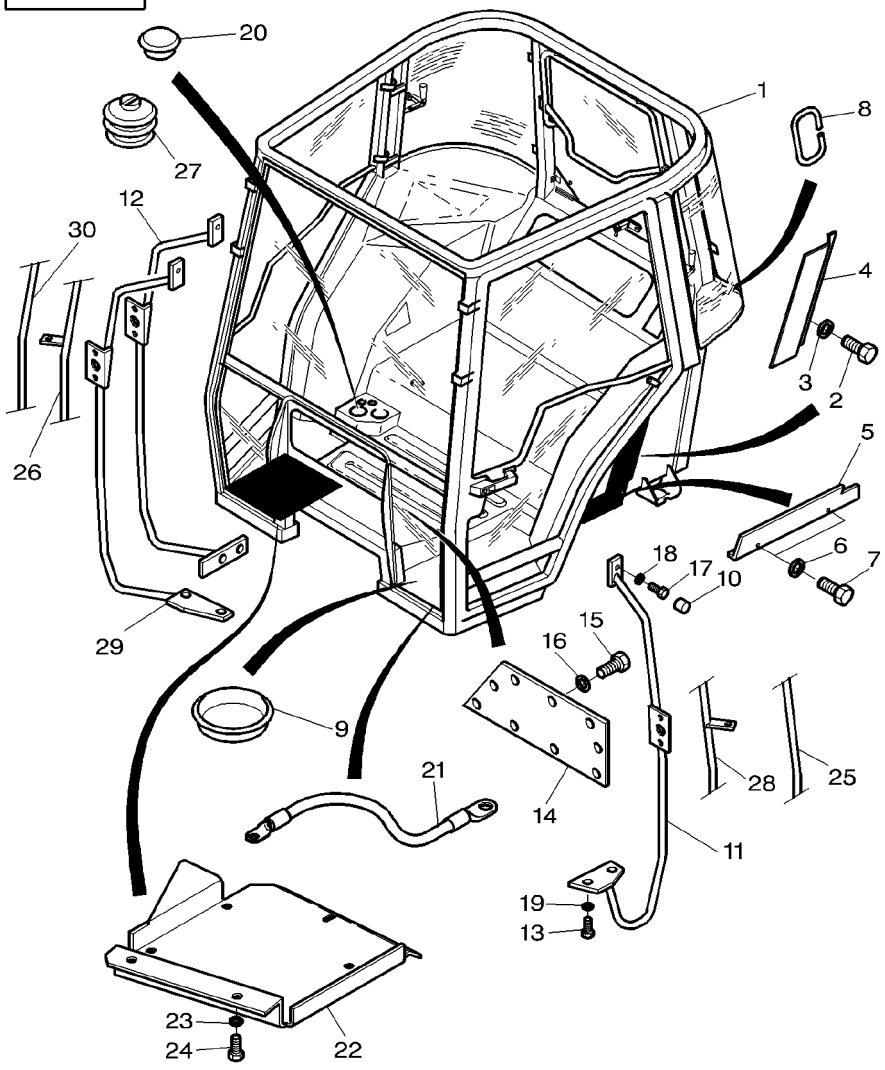

24	339560X1	M6X16	**3**	SCREW METRIC	VIS METRIQUE VITE METRICA	SCHRAUBE METR TORNILLO METRICO
25	3781298M91	[AD] ◀	**1**	GUIDEWAY	RAMBARDE ROTAIA	FUEHRUNGSSCHIENE RIEL DE GUIA
26	3780692M92	[A]	**1**	GUIDEWAY	RAMBARDE ROTAIA	FUEHRUNGSSCHIENE RIEL DE GUIA
27	3783232M1	➡ H140029 50X55MM	**1**	PLUG	BOUCHON TAPPO	VERSCHL.STOPFEN TAPON
28	3780040M91	[A] ◀	**1**	GUIDEWAY	RAMBARDE ROTAIA	FUEHRUNGSSCHIENE RIEL DE GUIA
29	3780048M92	▶ ➡ J004004	**1**	GUIDEWAY	RAMBARDE ROTAIA	FUEHRUNGSSCHIENE RIEL DE GUIA
30	3783538M91	[AD]	**1**	GUIDEWAY	RAMBARDE ROTAIA	FUEHRUNGSSCHIENE RIEL DE GUIA

[A] NORTH AMERICA ONLY
AMERIQUE DU NORD SEULEMENT
NUR FUER NORDAMERIKA
NOLO PER IL MERCATO N.A.
NORTE AMERICA SOLAMENTE

[D] WITHOUT WORK LIGHT WITH FLASHERS ON ROOF
SANS PHARE DE TRAVAIL AVEC CLIGNOTANT DE TOIT
OHNE ARBEITSLICHT MIT DACHBLINKLICHT
CON PROJETTORE DI LAVORO INTERMITTENTE EN EL TETTO
CON FARO DE TRABAJO CON INTERMITETE EN EL TECHO

Doors
Portes
Tuer
Porta
Puerta

110-10

1-ZU05-001-B

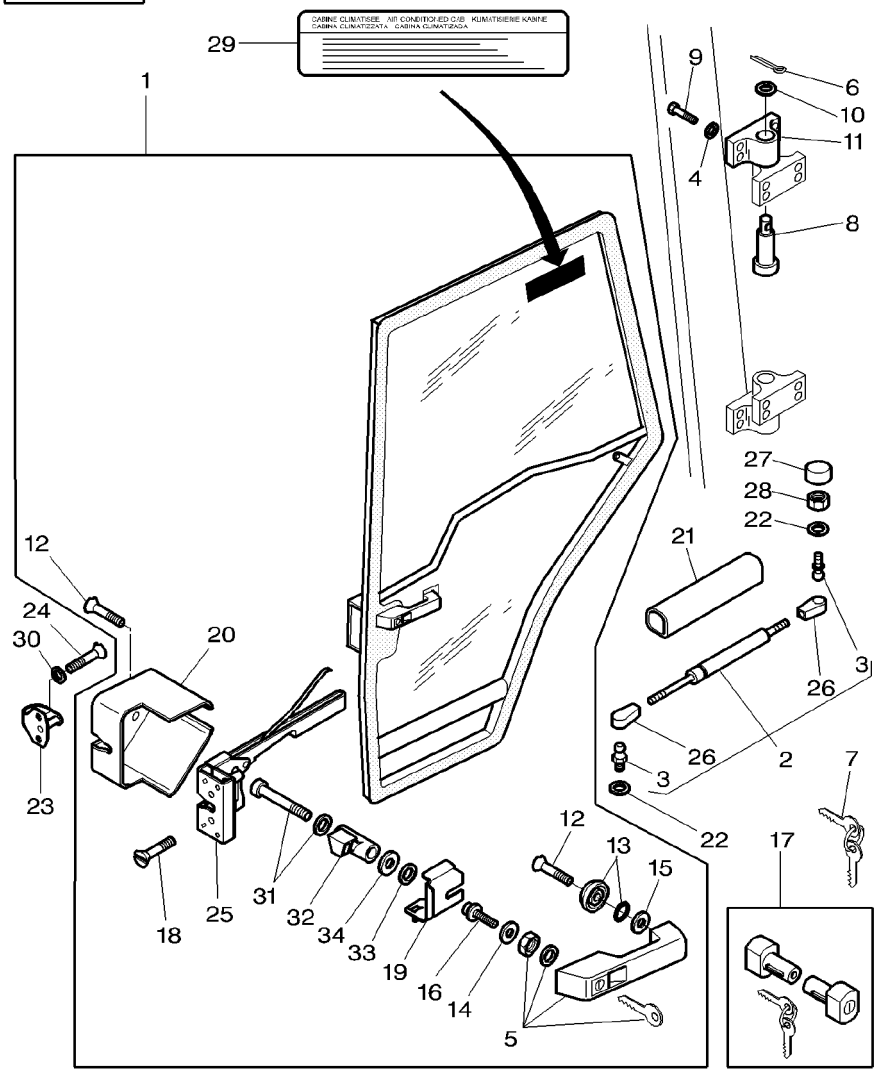

1	**3902120M91**	▶	**1**	GATE	PORTE	TOR
					CANCELLO	PORTILLO
1	**3902119M91**	◀	**1**	GATE	PORTE	TOR
					CANCELLO	PORTILLO
2	3902121M3		**2**	RAM	VERIN	HYDR.ZYLINDER
					CILINDRO IDRAUL.	ARIETE
3	3902773M1	2	**2**	TOGGLE	ROTULE	GELENKZAPFEN
					ROTULA	PERNO ENGANCHE
4	385361X1		**16**	WASHER METRIC	RONDELLE METR.	SCHEIBE METRISCH
					RONDELLA METRICO	ARANDELA METRICO
5	**3902356M91**	1 [A] No610	**2**	HANDLE	POIGNEE	HANDGRIFF
					MANIGLIA	MANETA
6	1442963X1	∅ 2,5X32	**4**	SPLIT PIN	GOUPILLE FENDUE	SPALTBOLZEN
					PERNO DIVISORIO	PASADOR HENDIDO
7	***3902584M91***		**1**	KIT, SPANNER	JEU CLES	SCHLUESSEL-SATZ
					KIT CHIAVE	JUEGO ALICATES
8	3903186M1		**4**	CLEVIS PIN	AXE	SPLINTBOLZEN
					PERNO D'ATTACCO	BULON CILINDRICO
9	3902414M1	M8X20	**16**	SCREW	VIS	SCHRAUBE
					VITE	TORNILLO
10	3903187M1	∅ 22X12X1,2	**4**	WASHER	RONDELLE	UNTERLEGSCHEIBE
					RONDELLA	ARANDELA
11	3902116M1		**4**	HINGE	CHARNIERE	SCHARNIER
					CERNIERA	BISAGRA
12	3902411M1	1 M6X16	**4**	SCREW	VIS	SCHRAUBE
					VITE	TORNILLO
13	3902145M1	1	**2**	SKATE	PATIN	SCHLITTEN-KUFE
					PATTINO	PATIN
14	3902366M1	1 28X42X2	**2**	WASHER	RONDELLE	UNTERLEGSCHEIBE
					RONDELLA	ARANDELA
15	3902367M1	1 5X18X1	**2**	WASHER	RONDELLE	UNTERLEGSCHEIBE
					RONDELLA	ARANDELA
16	3902368M1	1 ➡	**2**	SCREW SPECIAL	VIS SPECIALE	SPEZIALSCHRAUBE
					VITE SPECIALE	TORNILLO ESPEC.
17	**3902370M91**	No 610	**1**	PARTS PACK	JEU PIECES	SATZ TEILE
					PACCO RICAMBI	PAQUETE PIEZAS
18	3902412M1	1 M6X25	**4**	SCREW	VIS	SCHRAUBE
					VITE	TORNILLO
19	3902369M1	1 ◀ ➡	**1**	ROD LINK	BIELLETTE	VERBINDG.STANGE
					BISCOTTINO	VARILLA ENGANCHE
19	3902371M1	1 ▶ ➡	**1**	ROD LINK	BIELLETTE	VERBINDG.STANGE
					BISCOTTINO	VARILLA ENGANCHE
20	3804660M1	1 ▶	**1**	COVER	COUVERCLE	DECKEL
					COPERCHIO	CUBIERTA
20	3804661M1	1 ◀	**1**	COVER	COUVERCLE	DECKEL
					COPERCHIO	CUBIERTA
21	3902415M1		**2**	PROTECTOR	PROTECTEUR	SCHUTZ
					PROTETTORE	PROTECTOR
22	391025X1		**4**	LOCK WASHER	RONDELLE FREIN	FEDERRING
					ROSETTA ELASTICA	ARANDELA GROWER
23	3902372M1		**2**	LATCH	VERROU	RIEGEL
					SALISCENDI	CERROJO

1-ZU05-001-B

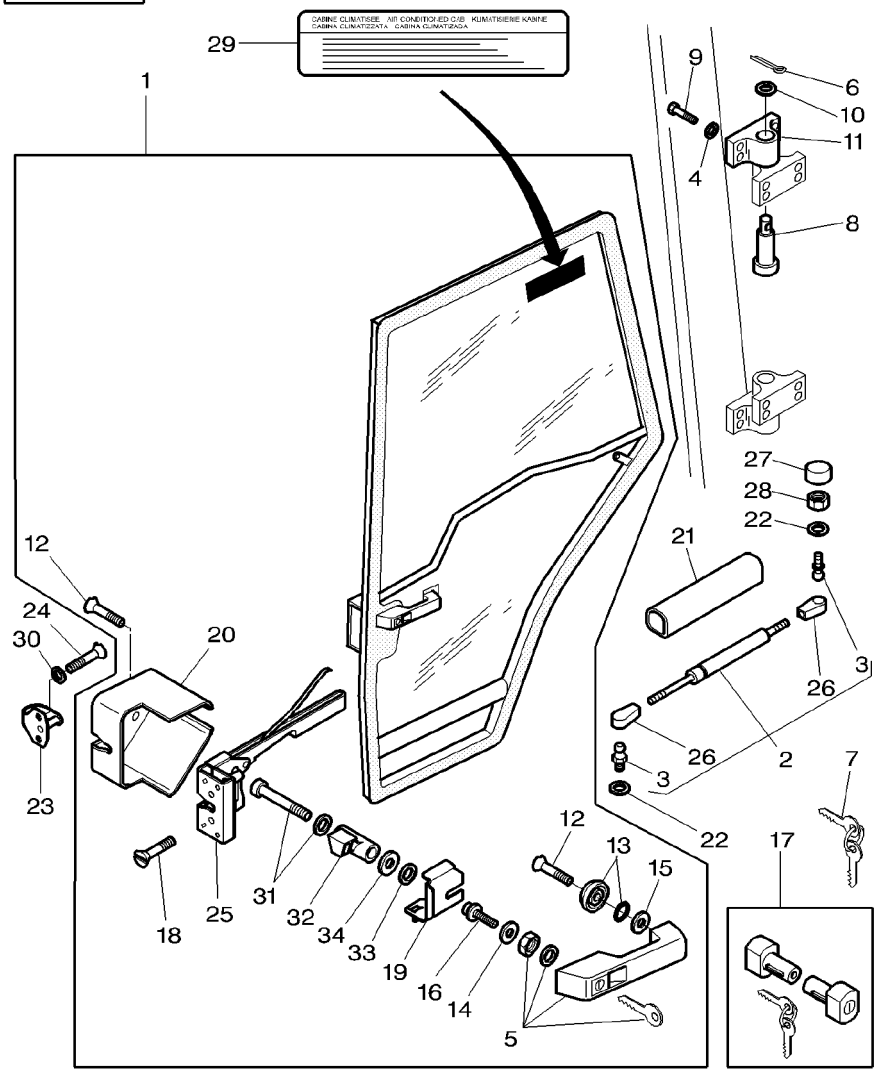

24	3010775X1	CBLX M6X25 ⇔ 3903188M1	**4**	SCREW	VIS VITE	SCHRAUBE TORNILLO
25	3804663M1	1 ◀	**1**	LATCH	VERROU SALISCENDI	RIEGEL CERROJO
25	3804662M1	1 ▶	**1**	LATCH	VERROU SALISCENDI	RIEGEL CERROJO
26		2 REFNo2	**2**	TOGGLE	ROTULE ROTULA	GELENKZAPFEN PERNO ENGANCHE
27	3616277M1		**2**	HELMET	CAPUCHON CASCO	SCHUTZHELM CASCO
28	339169X1		**2**	NUT METRIC	ECROU METRIQUE DADO METRICO	MUTTER METRISCH TUERCA METRICO
29	3619471M1		**1**	DECAL	DECALCOMANIE DECALCOMANIA	AUFKLEBER CALCOMANIA
30	391038X1		**4**	WASHER METRIC	RONDELLE METR. RONDELLA METRICO	SCHEIBE METRISCH ARANDELA METRICO
31		17 REF 17	**2**	PARTS PACK	JEU PIECES PACCO RICAMBI	SATZ TEILE PAQUETE PIEZAS
32	3903504M1		**2**	LATCH	VERROU SALISCENDI	RIEGEL CERROJO
33		[B]	**1**	WASHER	RONDELLE RONDELLA	UNTERLEGSCHEIBE ARANDELA
34		[B]	**1**	WASHER	RONDELLE RONDELLA	UNTERLEGSCHEIBE ARANDELA

[A] NUMBER STAMPED ON THE LOCK
NUMERO GRAVE SUR LA SERRURE
NUMMER RITZT AUF DER SCHLOSS
NUMERO SOPRA LA TOPPA
NUMERO GRABAR EN EL SERRADURA

[B] NUMBER TO BE ADVISED
NUMERO COMMUNIQUE ULTERIEUREMENT
NUMMER WIRD BEKANNTGEGEBEN
NUMERO DA AVUISARE
NUMERO AVISAR

1-ZU06-001-A

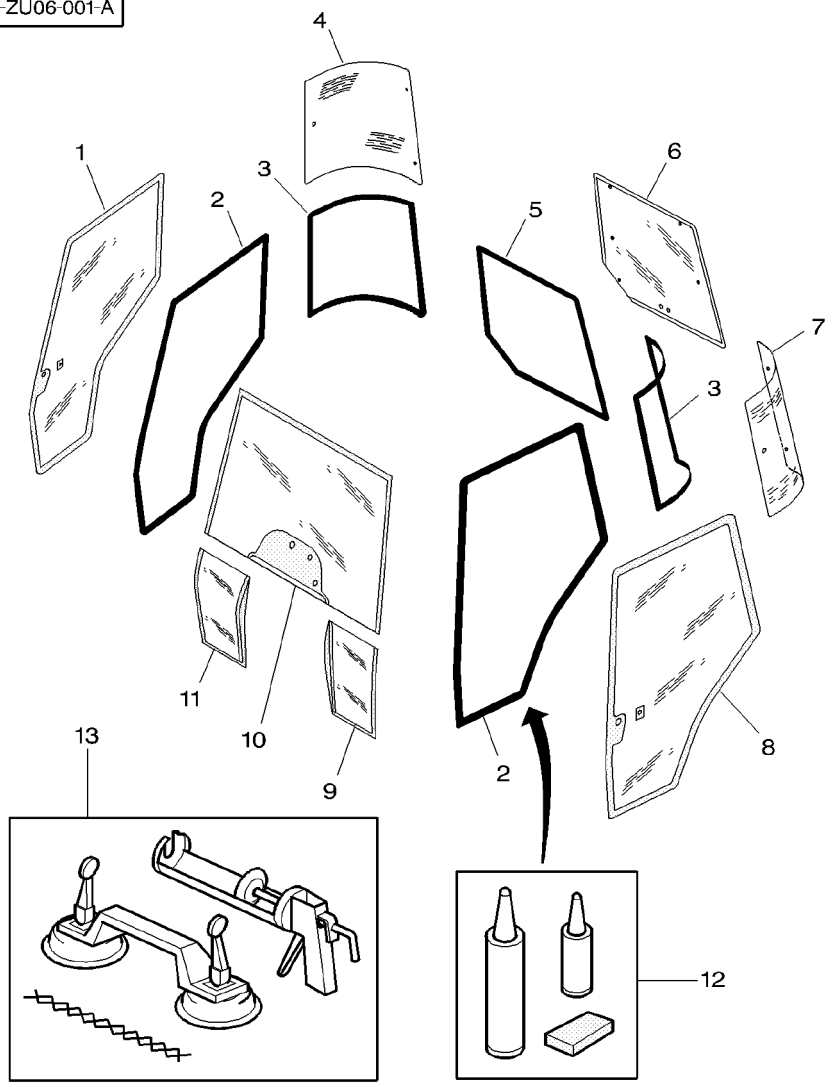

1	3902124M1	▶	**1**	WINDOW	GLACE FINESTRINO	FENSTER VENTANA
2	3902122M1		**2**	SEAL	JOINT ETANCHEITE PARAOLIO	DICHTRING RETEN
3	3902133M1		**2**	SEAL	JOINT ETANCHEITE PARAOLIO	DICHTRING RETEN
4	3902131M1	▶	**1**	WINDOW	GLACE FINESTRINO	FENSTER VENTANA
5	3902144M1		**1**	SEAL	JOINT ETANCHEITE PARAOLIO	DICHTRING RETEN
6	3715438M1		**1**	WINDOW	GLACE FINESTRINO	FENSTER VENTANA
7	3902130M1	◀	**1**	WINDOW	GLACE FINESTRINO	FENSTER VENTANA
8	3902123M1	◀	**1**	WINDOW	GLACE FINESTRINO	FENSTER VENTANA
9	3902149M1	◀	**1**	WINDOW	GLACE FINESTRINO	FENSTER VENTANA
10	3777602M2		**1**	WINDSCREEN	PARE BRISE PARABREZZA	WINDSCHUTZSCHEIB PARABRISAS
11	3902150M1	▶	**1**	WINDOW	GLACE FINESTRINO	FENSTER VENTANA
12	**3902373M91**		**1**	PARTS PACK	JEU PIECES PACCO RICAMBI	SATZ TEILE PAQUETE PIEZAS
13	3902503M91		**1**	PARTS PACK	JEU PIECES PACCO RICAMBI	SATZ TEILE PAQUETE PIEZAS

Side Window Mechanism
Mecanisme De Glace Laterale
Seitenfenster Ausstellvor
Comando Finestra Laterale
Mecanismo De Ventana Lateral

110-20

1-ZU85-001-A

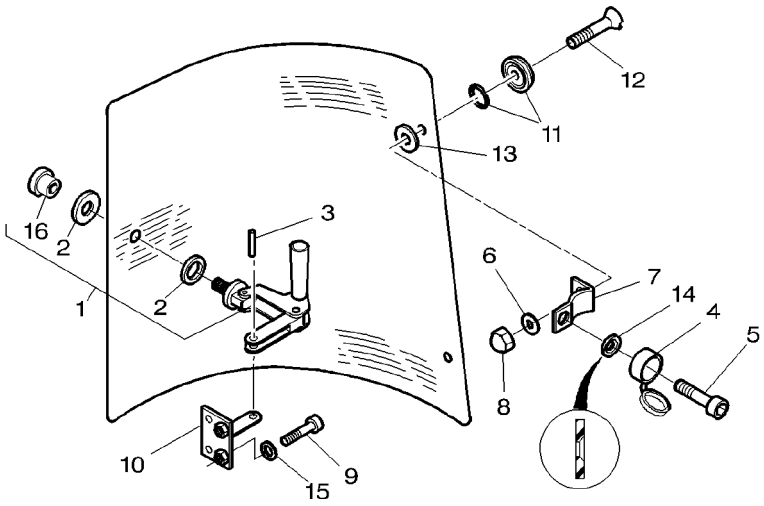

1	3476132M91	◀	**1**	STAY	HAUBAN BUSTO	STREBE TIRANTE
1	**3476133M91**	▶	**1**	STAY	HAUBAN BUSTO	STREBE TIRANTE
2	3478052M1	1	**2**	WASHER	RONDELLE RONDELLA	UNTERLEGSCHEIBE ARANDELA
3	1440396X1	5X12	**2**	DOWEL	PLOT SPINA	ZYLINDERSTIFT CENTRAJE
4	3902129M1		**4**	MUFF	CACHE MANICOTTO DEVIAN	FLANSCHMUFFE MANGUITO ACOPLAM
5	3010775X1	CBLX M6X25 ⇔ 3903188M1	**4**	SCREW	VIS VITE	SCHRAUBE TORNILLO
6	390971X1		**4**	WASHER METRIC	RONDELLE METR. RONDELLA METRICO	SCHEIBE METRISCH ARANDELA METRICO
7	3902128M1		**4**	HINGE	CHARNIERE CERNIERA	SCHARNIER BISAGRA
8	3902455M1	M6	**4**	NUT	ECROU DADO	MUTTER TUERCA
9	3010775X1	CBLX M6X25 ⇔ 3903188M1	**8**	SCREW	VIS VITE	SCHRAUBE TORNILLO
10	**3902134M1**	➡| H110015	**2**	SUPPORT	SUPPORT SUPPORTO	LAGERUNG DISPOS.DE SOSTEN
11	3902145M1		**4**	SKATE	PATIN PATTINO	SCHLITTEN-KUFE PATIN
12	3010775X1	CBLX M6X25 ⇔ 3903188M1	**4**	SCREW	VIS VITE	SCHRAUBE TORNILLO
13	3902365M1	∅ 8X30X3	**4**	WASHER	RONDELLE RONDELLA	UNTERLEGSCHEIBE ARANDELA
14		REF 5+4	**4**	MUFF	CACHE MANICOTTO DEVIAN	FLANSCHMUFFE MANGUITO ACOPLAM
15	391289X1		**8**	LOCK WASHER	RONDELLE FREIN ROSETTA ELASTICA	FEDERRING ARANDELA GROWER
16	3478051M1	1	**1**	NUT	ECROU DADO	MUTTER TUERCA

Rear Window Mechanism
Mecanisme De Glace Arriere
Heckfenster Ausstellvor
Comando Portello Posteriore
Mecanismo De Ventana Trasera

110-25

1-ZU84-001-B

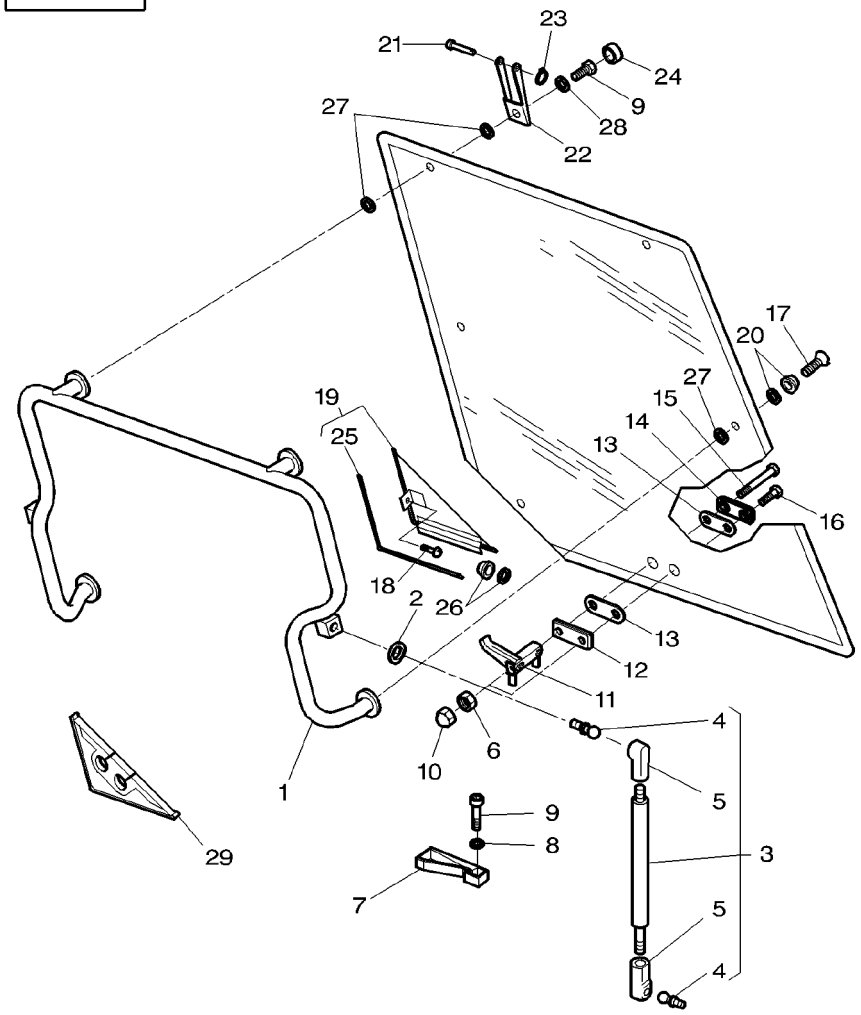

1	3902135M92			1	SUPPORT	SUPPORT SUPPORTO	LAGERUNG DISPOS.DE SOSTEN
2	391025X1			4	LOCK WASHER	RONDELLE FREIN ROSETTA ELASTICA	FEDERRING ARANDELA GROWER
3	3902140M1			2	RAM	VERIN CILINDRO IDRAUL.	HYDR.ZYLINDER ARIETE
4		3	REFNo3	2	TOGGLE	ROTULE ROTULA	GELENKZAPFEN PERNO ENGANCHE
5		3	REFNo3	2	TOGGLE	ROTULE ROTULA	GELENKZAPFEN PERNO ENGANCHE
6	1441204X1	M10		2	NUT METRIC	ECROU METRIQUE DADO METRICO	MUTTER METRISCH TUERCA METRICO
7	3619610M1			1	THRUSTER	ARRETOIR SPINGITORE	DRUCKRING PROPULSOR
8	391289X1			2	LOCK WASHER	RONDELLE FREIN ROSETTA ELASTICA	FEDERRING ARANDELA GROWER
9	3010775X1	CBLX M6X25 ⇔ 3903188M1		4	SCREW	VIS VITE	SCHRAUBE TORNILLO
10	3619609M1	M10		2	HELMET	CAPUCHON CASCO	SCHUTZHELM CASCO
11	3619605M1			1	HANDLE	POIGNEE MANIGLIA	HANDGRIFF MANETA
12	3619604M1			1	PLATE	PLAQUE PIASTRA	PLATTE PLATO
13	3619906M1			2	GASKET	JOINT GUARNIZIONE	DICHTSCHEIBE EMPAQUETADURA.
14	3619603M1			1	PLATE	PLAQUE PIASTRA	PLATTE PLATO
15	3619907M1	M10X130		1	SCREW	VIS VITE	SCHRAUBE TORNILLO
16	3619908M1	M10X35		1	SCREW	VIS VITE	SCHRAUBE TORNILLO
17	3010775X1	M6X25 ⇔ 3903188M1		2	SCREW	VIS VITE	SCHRAUBE TORNILLO
18	339228X1	➡ 12/09/99 M8X12		1	SCREW METRIC	VIS METRIQUE VITE METRICA	SCHRAUBE METR TORNILLO METRICO
19	3902386M91	➡ 12/09/99		1	PLATE	PLAQUE PIASTRA	PLATTE PLATO
20	3902145M1			2	SKATE	PATIN PATTINO	SCHLITTEN-KUFE PATIN
21	3902137M1			2	CLEVIS PIN	AXE PERNO D'ATTACCO	SPLINTBOLZEN BULON CILINDRICO
22	3902136M2			2	CLEVIS	CHAPE GANCIO D'ATTACCO	GABELSTUECK GANCHO SEGURI.
23	1440988X1			2	CLIP	CLIP FERMAGLIO	SCHELLE CRAPA RETEN
24	3902129M1			2	MUFF	CACHE MANICOTTO DEVIAN	FLANSCHMUFFE MANGUITO ACOPLAM
25	3902417M1	19 ➡ 12/09/99		1	GASKET	JOINT GUARNIZIONE	DICHTSCHEIBE EMPAQUETADURA.
26	3619241M1	➡ 12/09/99		1	BUTTON	BOUTON PULSANTE	KNOPFTASTE PULSADOR

Rear Window Mechanism
Mecanisme De Glace Arriere
Heckfenster Ausstellvor
Comando Portello Posteriore
Mecanismo De Ventana Trasera

110-25

1-ZU84-001-B

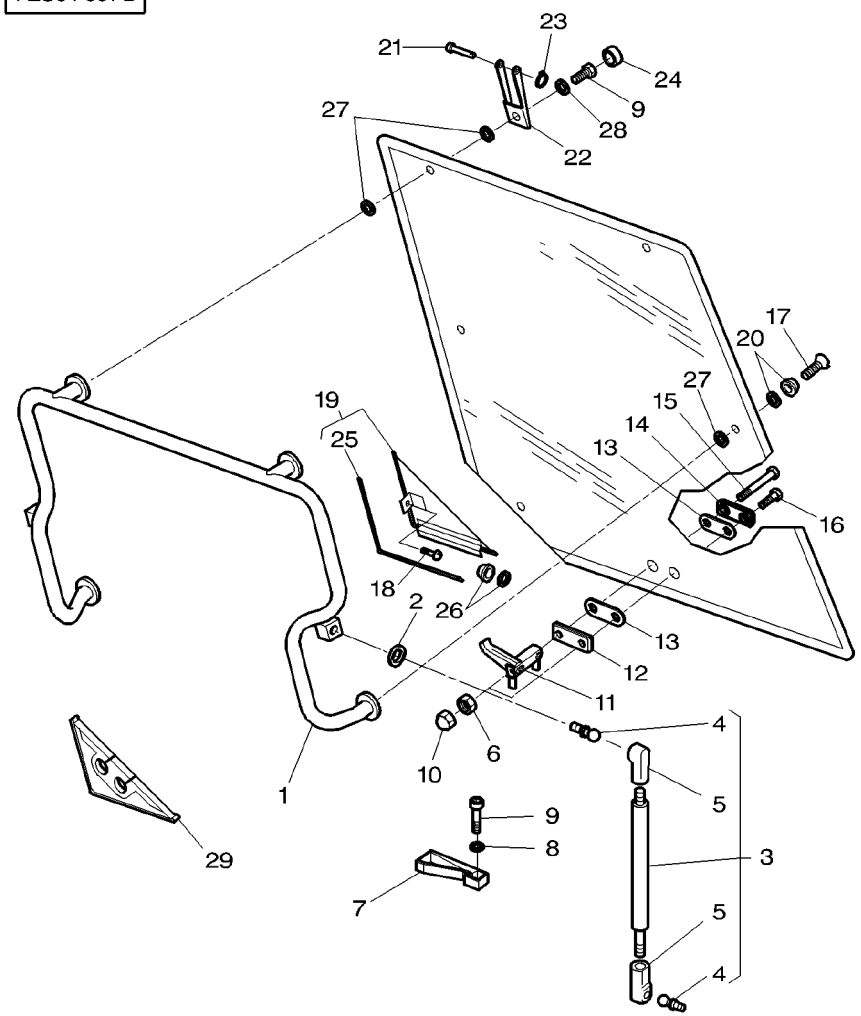

27	3902365M1	∅	8X30X3	**6**	WASHER	RONDELLE RONDELLA UNTERLEGSCHEIBE ARANDELA
28	385361X1			**2**	WASHER METRIC	RONDELLE METR. RONDELLA METRICO SCHEIBE METRISCH ARANDELA METRICO
29	3806376M1	➡	13/09/99	**1**	SEAL	JOINT ETANCHEITE PARAOLIO DICHTRING RETEN

Roof
Toit
Dach
Tetto
Tejado

110-30

1-ZU02-001-C

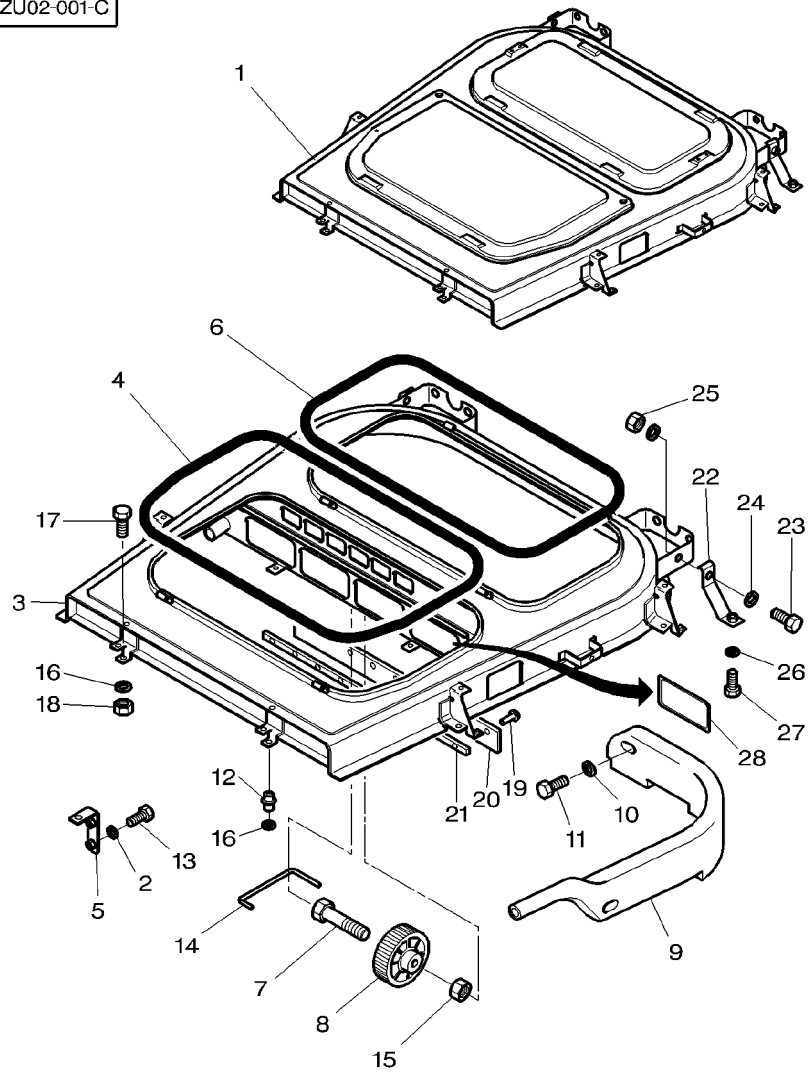

1	3714088M93			1	ROOF	TOIT TETTO	DACH TECHO
1	5016001M91	(US)		1	ROOF	TOIT TETTO	DACH TECHO
2	339102X1	1	M5	2	WASHER METRIC	RONDELLE METR. RONDELLA METRICO	SCHEIBE METRISCH ARANDELA METRICO
3		1	REF NO 1	1	ROOF	TOIT TETTO	DACH TECHO
4	3713158M1	1	2858MM	1	GASKET	JOINT GUARNIZIONE	DICHTSCHEIBE EMPAQUETADURA.
5	3713802M1	1		1	STRAP	PATTE CORREGGIA	LASCHE FAJA
6	3713159M1		2740MM	1	GASKET	JOINT GUARNIZIONE	DICHTSCHEIBE EMPAQUETADURA.
7	339229X1	1	M6	1	BOLT METRIC	BOULON METRIQUE BULLONE METRICO	MASCH.SCHRB MET PERNO METRICO
8	3713167M1	1		1	BUTTON	BOUTON PULSANTE	KNOPFTASTE PULSADOR
9	3713163M1	1		1	MANIFOLD	COLLECTEUR COLLETTORE	KRUEMMER MULTIPLE
9	3713164M1	1		1	MANIFOLD	COLLECTEUR COLLETTORE	KRUEMMER MULTIPLE
10	390971X1	1	M6	4	WASHER METRIC	RONDELLE METR. RONDELLA METRICO	SCHEIBE METRISCH ARANDELA METRICO
11	3008342X1	1	M6X25	4	SCREW METRIC	VIS METRIQUE VITE METRICA	SCHRAUBE METR TORNILLO METRICO
12	3901206M1	1	M6	8	NUT	ECROU DADO	MUTTER TUERCA
12	3778304M1	1	M8	8	NUT	ECROU DADO	MUTTER TUERCA
13	390990X1	1	M5X12	2	SCREW METRIC	VIS METRIQUE VITE METRICA	SCHRAUBE METR TORNILLO METRICO
14	3714090M1	1		1	DRAGLINK	TIRANT MAGLIA PER DRAGA	SCHUBSTANGE ENGANCHE DE TIRO
15	1441500X1	1	M6	1	LOCKNUT	ECROU BLOCAGE AUTOBLOCCANTE	FLACHMUTTER CONTRATUERCA
16	3010597X1	∅	8-22MM	16	TAB WASHER	RONDELLE EVENT PIASTRINA SICUR	SICHERUNGSBLECH ARANDELA ALETA
17	339123X1		M8X20MM	8	SCREW METRIC	VIS METRIQUE VITE METRICA	SCHRAUBE METR TORNILLO METRICO
18	339169X1		M8	8	NUT METRIC	ECROU METRIQUE DADO METRICO	MUTTER METRISCH TUERCA METRICO
19	338980X1	1		9	RIVET	RIVET RIVETTO	NIET REMACHE
20	3713165M1	1		1	BAND	BANDE NASTRO	BAND BANDA
21	3713166M2	1		1	PLATE	PLAQUE PIASTRA	PLATTE PLATO
22	3782969M1	(US)		2	BRACKET	SUPPORT FIXATION SUPPORTO FISSAGG	HALTEARM SOPORTE
23	339123X1	(US)	M8X20	2	SCREW METRIC	VIS METRIQUE VITE METRICA	SCHRAUBE METR TORNILLO METRICO

Roof
Toit
Dach
Tetto
Tejado

110-30

1-ZU02-001-C

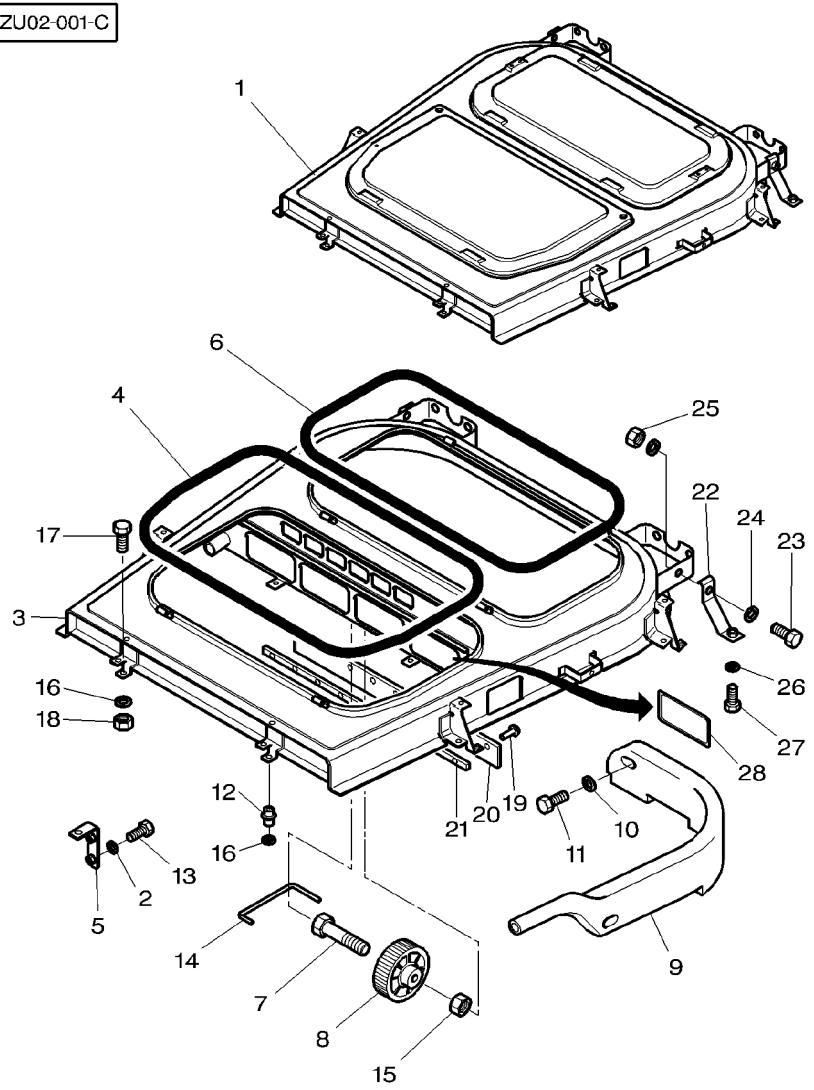

24	390972X1	US	**4**	WASHER METRIC	RONDELLE METR. RONDELLA METRICO	SCHEIBE METRISCH ARANDELA METRICO
25	394367X1	US	**2**	LOCKNUT	ECROU BLOCAGE AUTOBLOCCANTE	FLACHMUTTER CONTRATUERCA
26	391038X1	US	**2**	WASHER METRIC	RONDELLE METR. RONDELLA METRICO	SCHEIBE METRISCH ARANDELA METRICO
27	339560X1	US M6X16	**2**	SCREW METRIC	VIS METRIQUE VITE METRICA	SCHRAUBE METR TORNILLO METRICO
28	3784593M1	US AA ZA	**1**	PLATE	PLAQUE PIASTRA	PLATTE PLATO

Heating Hatchway
Trappe De Chauffage
Heizungsduese
Bocchetta Riscaldamento
Escotilla De Calefaccion

110-35

1-ZU42-001-B

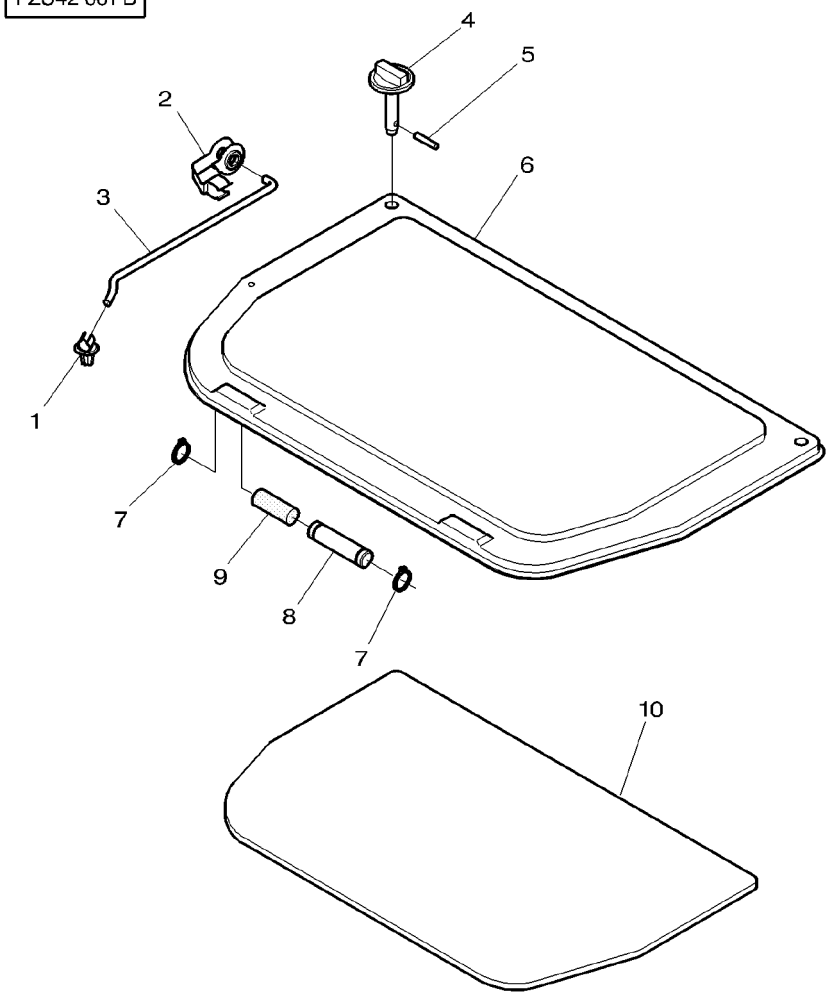

1	3385465M1		
2	894225M1		
3	3713161M1		
4	3713160M91		
5	3006465X1		
6	3712959M1		
7	3000261X1		
8	3303074M1		
9	3303077M1		
10	3784700M1	5MM (US) (AA) (ZA)	

1	PLIERS	PINCE PINZE	ZANGE PINZAS
1	CLIP	CLIP FERMAGLIO	SCHELLE CRAPA RETEN
1	STEM	TIGE STELO	STIEL VASTAGO
2	STEM	TIGE STELO	STIEL VASTAGO
2	ROLL PIN	GOUPILLE ROULEE SPINA ELASTICA	SPANNHUELSE PASADOR ELASTICO
1	TRAP	TRAPPE TRAPPOLA	FANGKLAPPE PURGADOR
4	CLIP	CLIP FERMAGLIO	SCHELLE CRAPA RETEN
2	CLEVIS PIN	AXE PERNO D'ATTACCO	SPLINTBOLZEN BULON CILINDRICO
2	BUSH	BAGUE BOCCOLA	BUCHSE CASQUILLO
1	FOAM	MOUSSE GOMMAPIUMA	SCHAUMSTOFF ESPUMA

Air Hatchway
Trappe D'Aeration
Belueftungsduese
Bocchetta Aria
Escotilla De Aire

110-40

1-ZU43-001-A

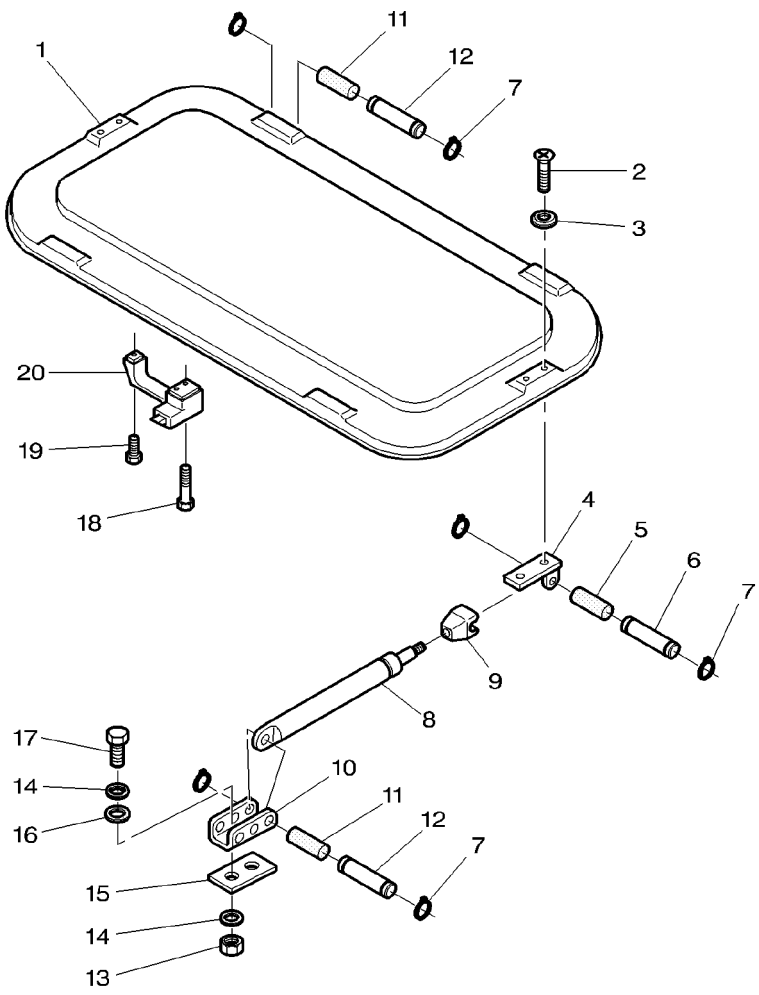

1	3712960M1		**1**	TRAP	TRAPPE TRAPPOLA	FANGKLAPPE PURGADOR
2	3009439X1	M8X16	**4**	SCREW	VIS VITE	SCHRAUBE TORNILLO
3	3530168M1		**4**	WASHER	RONDELLE RONDELLA	UNTERLEGSCHEIBE ARANDELA
4	3580934M91	▶	**1**	SUPPORT	SUPPORT SUPPORTO	LAGERUNG DISPOS.DE SOSTEN
4	3580933M91	◀	**1**	SUPPORT	SUPPORT SUPPORTO	LAGERUNG DISPOS.DE SOSTEN
5	3303076M1		**2**	BUSH	BAGUE BOCCOLA	BUCHSE CASQUILLO
6	3303075M1	6X33	**2**	CLEVIS PIN	AXE PERNO D'ATTACCO	SPLINTBOLZEN BULON CILINDRICO
7	3000261X1		**8**	CLIP	CLIP FERMAGLIO	SCHELLE CRAPA RETEN
8	3303021M91		**2**	GAS STRUT	VERIN AMORTISSEU CILINDRO GAS	GASZYLINDER CILINDRO GAS
9	3303019M3		**1**	HEAD	TETE TESTA	KOPF CULATA
10	3301743M1		**2**	LOCK	SERRURE SERRATURA	SCHLOSS CERRADURA
11	3303077M1		**4**	BUSH	BAGUE BOCCOLA	BUCHSE CASQUILLO
12	3303074M1	6X38	**4**	CLEVIS PIN	AXE PERNO D'ATTACCO	SPLINTBOLZEN BULON CILINDRICO
13	339169X1	M8	**4**	NUT METRIC	ECROU METRIQUE DADO METRICO	MUTTER METRISCH TUERCA METRICO
14	390972X1		**8**	WASHER METRIC	RONDELLE METR. RONDELLA METRICO	SCHEIBE METRISCH ARANDELA METRICO
15	3385446M1		**2**	GASKET	JOINT GUARNIZIONE	DICHTSCHEIBE EMPAQUETADURA.
16	3301742M1		**4**	WASHER	RONDELLE RONDELLA	UNTERLEGSCHEIBE ARANDELA
17	339123X1	M8X20	**4**	SCREW METRIC	VIS METRIQUE VITE METRICA	SCHRAUBE METR TORNILLO METRICO
18	1441967X1	M6X45	**2**	SCREW METRIC	VIS METRIQUE VITE METRICA	SCHRAUBE METR TORNILLO METRICO
19	395579X1	M6X16	**1**	SCREW METRIC	VIS METRIQUE VITE METRICA	SCHRAUBE METR TORNILLO METRICO
20	3388511M91		**1**	HANDLE	POIGNEE MANIGLIA	HANDGRIFF MANETA

High Visibility Roof
Toit Haute Visibilite
Dach Mit Sonnendach
Tetto Alta Visibilita
Tejado Alta Visibilidad

110-45

1-ZU01-001-B

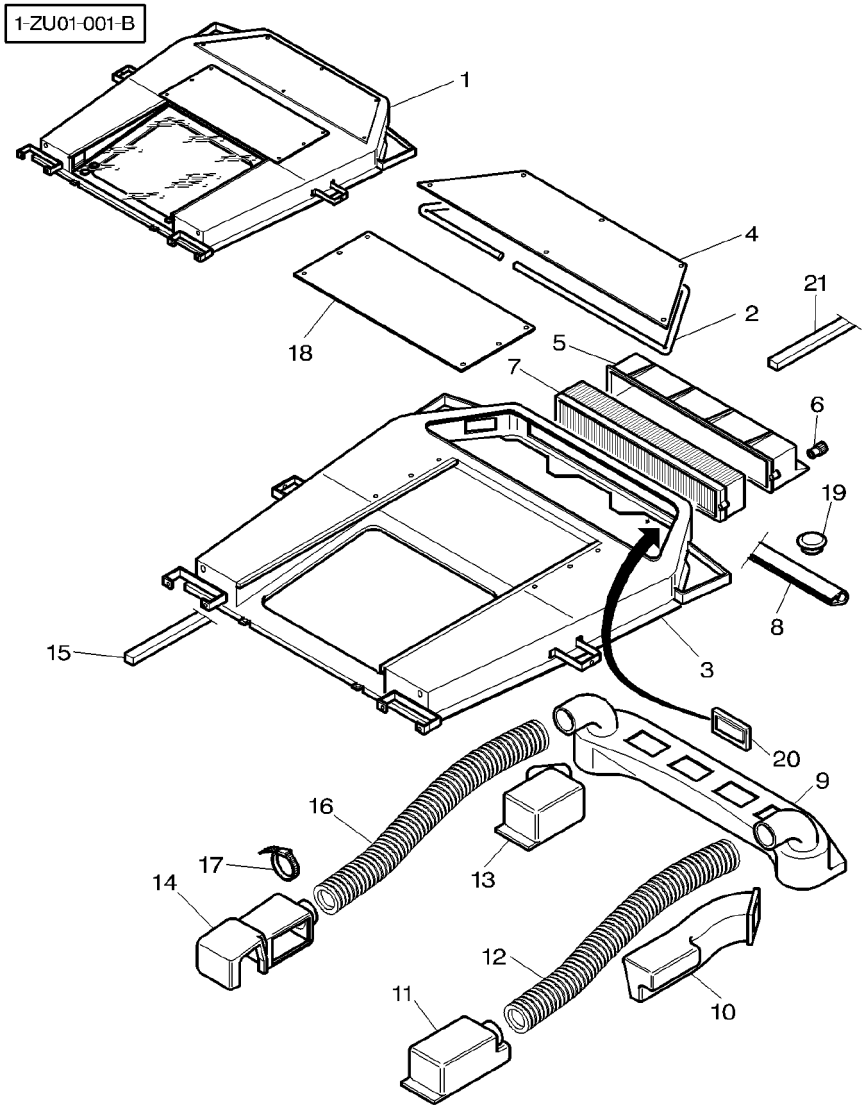

1	3780714M91		1	ROOF	TOIT TETTO	DACH TECHO
2	3778710M1	1	1	GASKET	JOINT GUARNIZIONE	DICHTSCHEIBE EMPAQUETADURA.
3		1 ⛽ REF NO 1	1	ROOF	TOIT TETTO	DACH TECHO
4	3777396M1	1	1	TRAP	TRAPPE TRAPPOLA	FANGKLAPPE PURGADOR
5	3388743M1		1	FRAME ASSY	CADRE TELAIO COMPLETO	RAHMEN KPL CJTO.BASTIDOR
6	3778322M1	1	2	BUTTON	BOUTON PULSANTE	KNOPFTASTE PULSADOR
7	***3388840M2***		1	CAB FILTER	FILTRE CABINE FILTRO CABINA	KABINE FILTER FILTRO CABINA
7	***3389746M1***	[A]	1	CAB FILTER	FILTRE CABINE FILTRO CABINA	KABINE FILTER FILTRO CABINA
8	3778711M1		2	GASKET	JOINT GUARNIZIONE	DICHTSCHEIBE EMPAQUETADURA.
8	3783129M1	◀▶ 25	1	STAPLE	CAVALIER PONTICELLO	KRAMPE GRAPA
8	3580695M1		1	GASKET	JOINT GUARNIZIONE	DICHTSCHEIBE EMPAQUETADURA.
9	3778070M1	1	1	LOCKER	CAISSON CASSETTO	FACH CAJON
10	3778072M1	1 ◀	1	LOCKER	CAISSON CASSETTO	FACH CAJON
11	3778069M1	1 ◀	1	LOCKER	CAISSON CASSETTO	FACH CAJON
12	3777709M1	1 ◀▶ 780MM	1	WARM AIR DUCTING	CONDUIT AIR CONDOTTO ARIA	HEIZUNGSVERKLDG CONDUC AIRE CAL
13	3778071M1	1 ▶	1	LOCKER	CAISSON CASSETTO	FACH CAJON
14	3778068M1	1 ▶	1	LOCKER	CAISSON CASSETTO	FACH CAJON
15	3778289M1	10X15X580MM	4	GASKET	JOINT GUARNIZIONE	DICHTSCHEIBE EMPAQUETADURA.
15	3778290M1	10X15X370MM	2	GASKET	JOINT GUARNIZIONE	DICHTSCHEIBE EMPAQUETADURA.
16	3777710M1	1 ◀▶ 670MM	1	WARM AIR DUCTING	CONDUIT AIR CONDOTTO ARIA	HEIZUNGSVERKLDG CONDUC AIRE CAL
17	3619622M1	1	4	CABLE TIE	ATTACHE CABLE FASCETTA CAVI	KABELBINDER ENLACE DE CABLE
18	3778704M1	1	1	BONNET	CAPOT COFANO	MOTORHAUBE CAPOT
19	3713587M1	∅ 22	4	PLUG	BOUCHON TAPPO	VERSCHL.STOPFEN TAPON
20	3784593M1	130X216MM US AA ZA	1	PLATE	PLAQUE PIASTRA	PLATTE PLATO

High Visibility Roof
Toit Haute Visibilite
Dach Mit Sonnendach
Tetto Alta Visibilita
Tejado Alta Visibilidad

110-45

1-ZU01-001-B

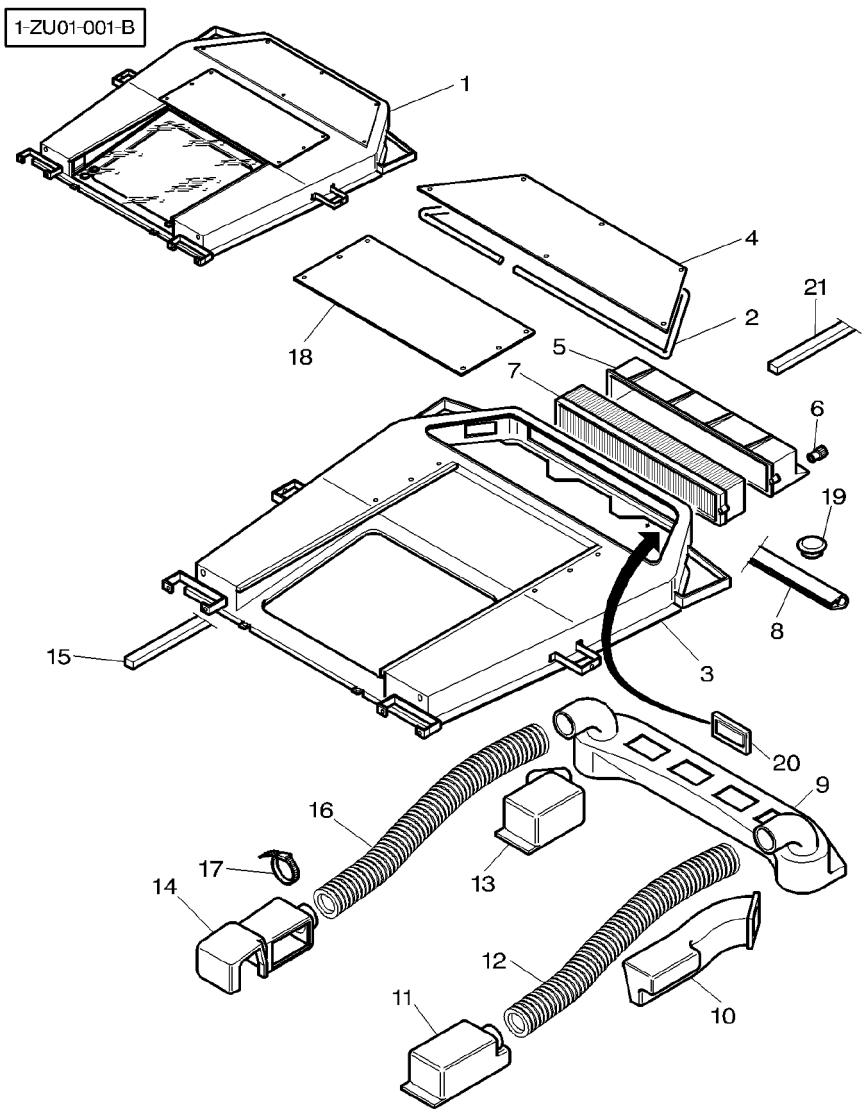

21	3713635M1	➡ ➡ 25X10X200	**1** GASKET	JOINT GUARNIZIONE	DICHTSCHEIBE EMPAQUETADURA.
21	3782881M1	➡ 30X10X55	**2** GASKET	JOINT GUARNIZIONE	DICHTSCHEIBE EMPAQUETADURA.

[A] CARBON FILTER
FILTRE A CHARBON
KOHLEFILTER
FILTRO CARBOME
FILTRO CARBON

High Visibility Roof	Window
Toit Haute Visibilite	Glace
Dach Mit Sonnendach	Fenster
Tetto Alta Visibilita	Finestrino
Tejado Alta Visibilidad	Ventana

110-50

1-ZU14-001-A

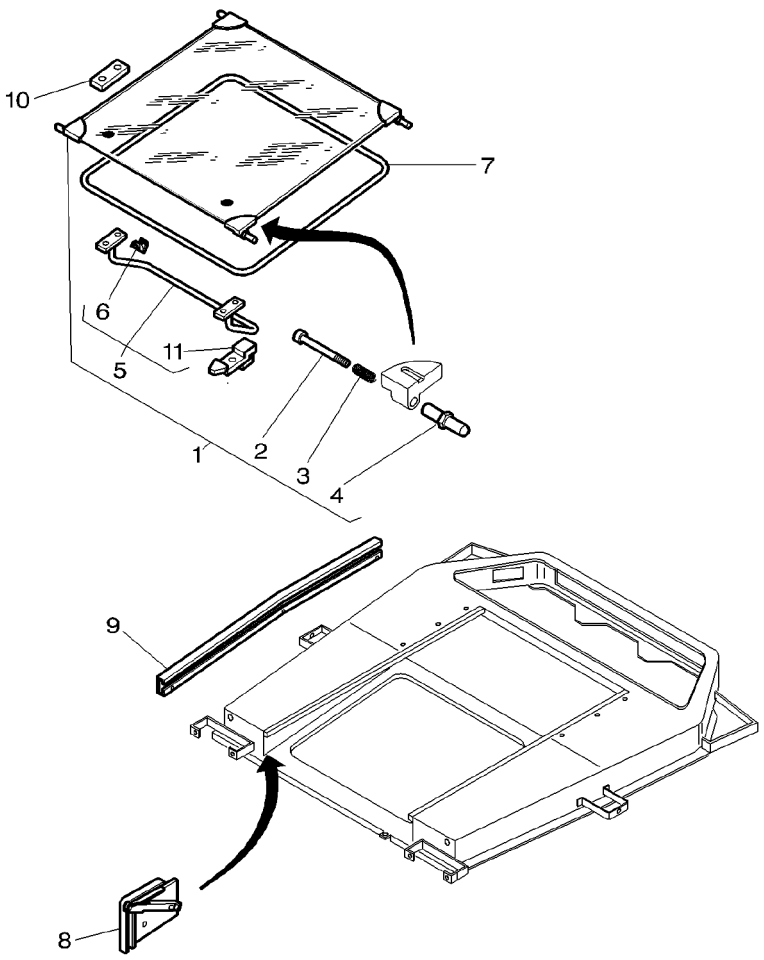

1	3780538M91			**1**	WINDOW	GLACE / FINESTRINO / VENTANA
2	3780474M1	1		**4**	SCREW	VIS / VITE / SCHRAUBE / TORNILLO
3	3780473M1	1		**4**	SPRING	RESSORT / MOLLA / FEDER / MUELLE
4	3780472M1	1		**4**	ROLLER	GALET / RULLO / ROLLE / RODILLO
5	3780540M91	1		**1**	HANDLE	POIGNEE / MANIGLIA / HANDGRIFF / MANETA
6	3780544M1	5		**2**	STRAP	PATTE / CORREGGIA / LASCHE / FAJA
7	3902869M91			**1**	FRAME ASSY	CADRE / TELAIO COMPLETO / RAHMEN KPL / CJTO.BASTIDOR
8	3780529M91		◀	**1**	THRUSTER	ARRETOIR / SPINGITORE / DRUCKRING / PROPULSOR
8	3780523M91		▶	**1**	THRUSTER	ARRETOIR / SPINGITORE / DRUCKRING / PROPULSOR
9	3904102M91		◀	**1**	GUIDE	GUIDE / GUIDA / FUEHRUNG / GUIA
9	3780532M91		▶	**1**	GUIDE	GUIDE / GUIDA / FUEHRUNG / GUIA
10	3904103M1			**2**	PLATE	PLAQUE / PIASTRA / PLATTE / PLATO
11	3904104M1	5		**2**	LEVER	LEVIER / LEVA / HEBEL / PALANCA

1-ZU19-003-B

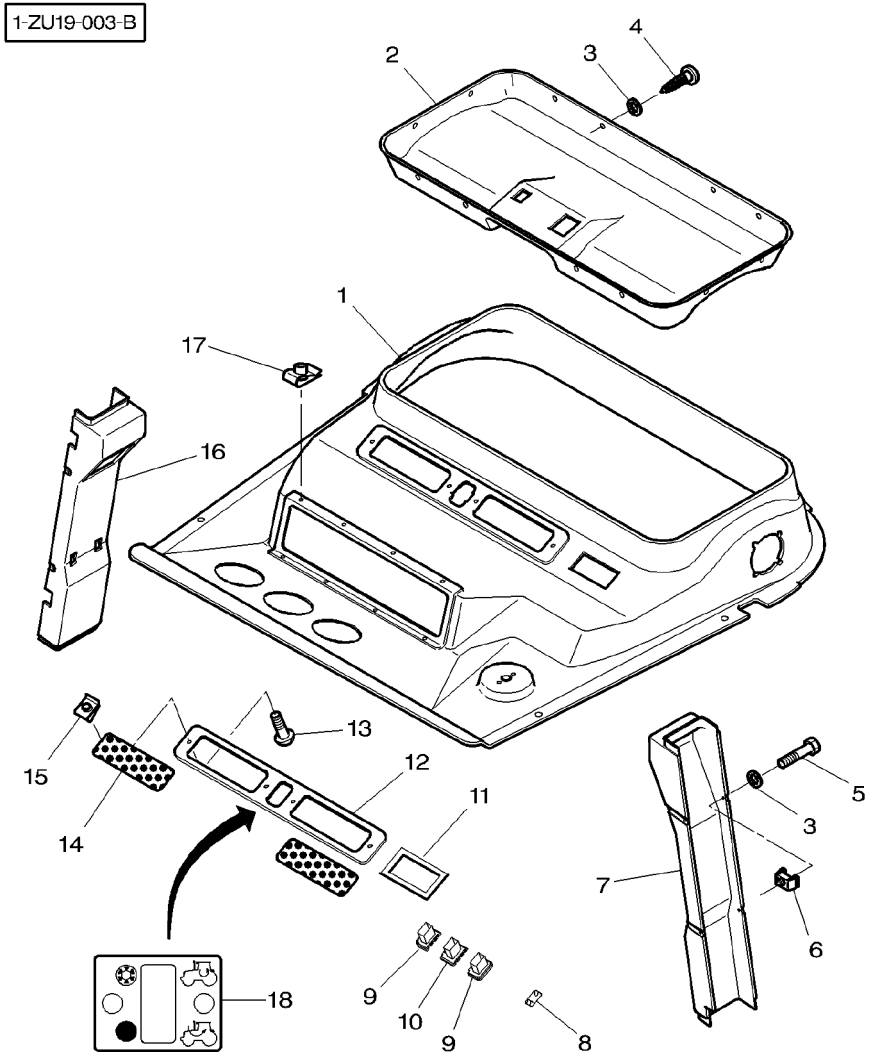

1	3780279M1		**1**	FACING	GARNITURE RIVESTIMENTO	VERBLENDUNG PARAMENTO
2	3712606M1		**1**	FACING	GARNITURE RIVESTIMENTO	VERBLENDUNG PARAMENTO
3	1427000M1		**23**	WASHER	RONDELLE RONDELLA	UNTERLEGSCHEIBE ARANDELA
4	3389854M1		**15**	SELF TAP SCREWS	VIS AUTO TARAUD KITAUTOBLOCCANTE	SCHNEIDSCHRAUBEN TORN.AUTOROSC.
5	3580257M1	M5 X 20	**8**	SCREW	VIS VITE	SCHRAUBE TORNILLO
6	3615557M1	M5	**8**	BOXNUT	ECROU CAGE SET DADI	UEBERWURFMUTTER TUERCA CIEGA
7	3712752M5	◀	**1**	MOUNTING	MONTANT SUPPORTO MONTAGG	HALTERUNG MONTANTE
8	3713151M1		**1**	TAP	OBTURATEUR TAPPO*	HAHN GRIFO
9	3713153M1		**2**	SUPPORT	SUPPORT SUPPORTO	LAGERUNG DISPOS.DE SOSTEN
10	3713152M1		**1**	SUPPORT	SUPPORT SUPPORTO	LAGERUNG DISPOS.DE SOSTEN
11	3713621M1		**1**	PLATE	PLAQUE PIASTRA	PLATTE PLATO
12	3712608M1		**1**	COVER	COUVERCLE COPERCHIO	DECKEL CUBIERTA
13	**3010506X1**		**4**	SCREW	VIS VITE	SCHRAUBE TORNILLO
14	3712607M2		**2**	GRILLE	GRILLE GRIGLIA	GRILL REJILLA
15	3715142M1	⧗ 3/5MM	**4**	NUT	ECROU DADO	MUTTER TUERCA
16	3713072M4	[A] ▶	**1**	MOUNTING	MONTANT SUPPORTO MONTAGG	HALTERUNG MONTANTE
16	3714919M1	▶	**1**	MOUNTING	MONTANT SUPPORTO MONTAGG	HALTERUNG MONTANTE
17	3715142M1	⧗ 3/5MM	**8**	NUT	ECROU DADO	MUTTER TUERCA
18	3784594M1	(US) (AA) (ZA)	**1**	DECAL	DECALCOMANIE DECALCOMANIA	AUFKLEBER CALCOMANIA

[A] WITHOUT DATATRONIC
SANS DATATRONIC
OHNE DATATRONIK
SIN DATATRONIC
SENZA DATATRONIC

High Visibility Roof Toit Haute Visibilite Dach Mit Sonnendach Tetto Alta Visibilita Tejado Alta Visibilidad	Cladding Habillage Dressieren Dressing Preparacion	110-60

1-ZU54-002-A

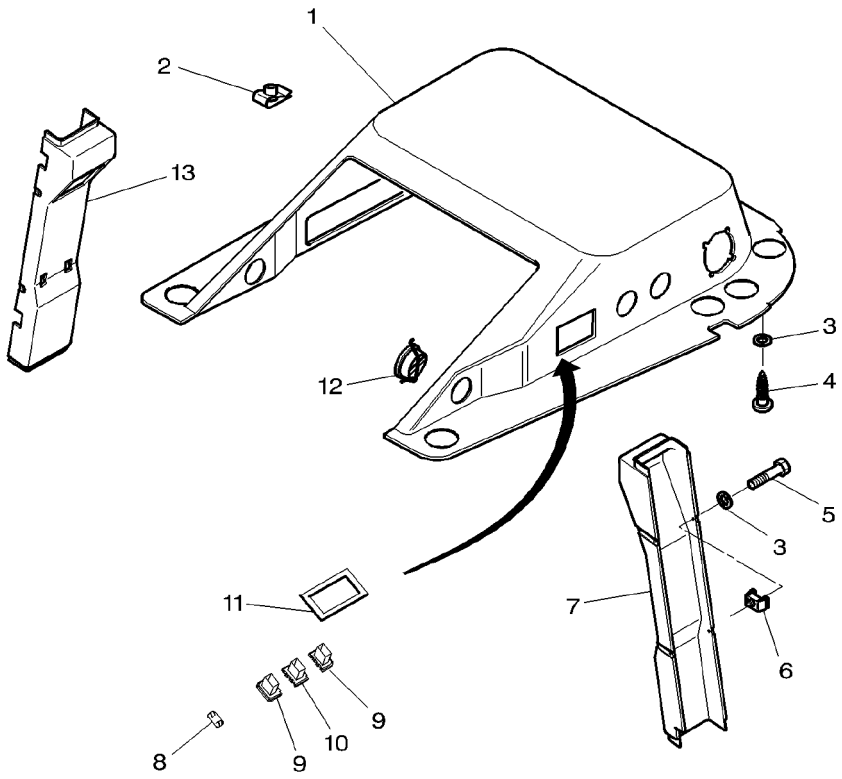

1	3777402M1		
2	3715142M1	⧗	3/5MM
3	1427000M1		
4	3389854M1		
5	**3010506X1**		M5X16
6	3615557M1		M5
7	3712752M5	◀	
8	3713151M1		
9	3713153M1		
10	3713152M1		
11	3778011M1		
12	3807934M1		
13	3713072M4	[A] ▶	
13	3714919M1	▶	

[A] WITHOUT DATATRONIC
SANS DATATRONIC
OHNE DATATRONIK
SIN DATATRONIC
SENZA DATATRONIC

1	FACING	GARNITURE RIVESTIMENTO	VERBLENDUNG PARAMENTO
8	NUT	ECROU DADO	MUTTER TUERCA
X	WASHER	RONDELLE RONDELLA	UNTERLEGSCHEIBE ARANDELA
X	SELF TAP SCREWS	VIS AUTO TARAUD KITAUTOBLOCCANTE	SCHNEIDSCHRAUBEN TORN.AUTOROSC.
4	SCREW	VIS VITE	SCHRAUBE TORNILLO
4	BOXNUT	ECROU CAGE SET DADI	UEBERWURFMUTTER TUERCA CIEGA
1	MOUNTING	MONTANT SUPPORTO MONTAGG	HALTERUNG MONTANTE
1	TAP	OBTURATEUR TAPPO*	HAHN GRIFO
2	SUPPORT	SUPPORT SUPPORTO	LAGERUNG DISPOS.DE SOSTEN
1	SUPPORT	SUPPORT SUPPORTO	LAGERUNG DISPOS.DE SOSTEN
1	SUPPORT	SUPPORT SUPPORTO	LAGERUNG DISPOS.DE SOSTEN
12	VENT	EVENT SFIATO	VENTILATION TOMA DE AIRE
1	MOUNTING	MONTANT SUPPORTO MONTAGG	HALTERUNG MONTANTE
1	MOUNTING	MONTANT SUPPORTO MONTAGG	HALTERUNG MONTANTE

1-ZU19-001-A

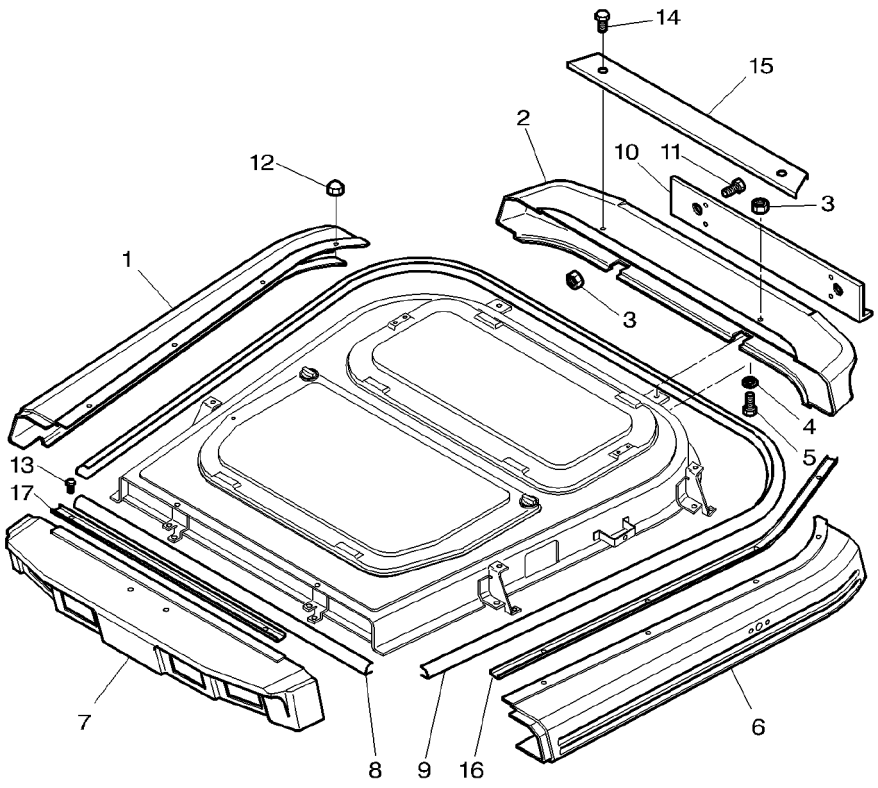

1	3712833M2	▶	**1**	FACING	GARNITURE RIVESTIMENTO	VERBLENDUNG PARAMENTO
2	**3712831M2**		**1**	FACING	GARNITURE RIVESTIMENTO	VERBLENDUNG PARAMENTO
3	339030X1	M6	**12**	NUT METRIC	ECROU METRIQUE DADO METRICO	MUTTER METRISCH TUERCA METRICO
4	391038X1	∅ 6MM	**14**	WASHER METRIC	RONDELLE METR. RONDELLA METRICO	SCHEIBE METRISCH ARANDELA METRICO
5	339666X1	M6X20	**2**	SCREW METRIC	VIS METRIQUE VITE METRICA	SCHRAUBE METR TORNILLO METRICO
6	**3712832M1**	◀	**1**	FACING	GARNITURE RIVESTIMENTO	VERBLENDUNG PARAMENTO
7	3780676M1	[A]	**1**	VISOR	VISIERE PARASOLE	SONNENBLENDE VISERA
7	3780675M1	[B]	**1**	VISOR	VISIERE PARASOLE	SONNENBLENDE VISERA
8	**3714885M1**	◀▶ 1050mm	**1**	GASKET	JOINT GUARNIZIONE	DICHTSCHEIBE EMPAQUETADURA.
9	**3714884M1**	◀▶ 3700mm	**1**	GASKET	JOINT GUARNIZIONE	DICHTSCHEIBE EMPAQUETADURA.
10	3715422M1		**1**	DEFLECTOR	DEFLECTEUR DEFLETTORE	ABWEISBLECH DEFLECTOR
11	391074X1	M6x12MM	**4**	SCREW METRIC	VIS METRIQUE VITE METRICA	SCHRAUBE METR TORNILLO METRICO
12	**3010594X1**		**8**	NUT METRIC	ECROU METRIQUE DADO METRICO	MUTTER METRISCH TUERCA METRICO
13	339804X1	M6X25	**2**	SCREW METRIC	VIS METRIQUE VITE METRICA	SCHRAUBE METR TORNILLO METRICO
14	339262X1	M6X30	**2**	BOLT METRIC	BOULON METRIQUE BULLONE METRICO	MASCH.SCHRB MET PERNO METRICO
15	3715679M1		**1**	PROFILE	PROFILE PROFILO	PROFIL PERFIL
16	3715676M1	▶	**1**	PROFILE	PROFILE PROFILO	PROFIL PERFIL
16	3715677M1	◀	**1**	PROFILE	PROFILE PROFILO	PROFIL PERFIL
17	3715678M1		**1**	PROFILE	PROFILE PROFILO	PROFIL PERFIL

[A] WITH 2 HEADLAMPS
AVEC 2 PHARES
MIT 2 FAHRSCHEINWERFER
CON 2 FARI
CON 2 FARI

[B] WITH 4 HEADLAMPS
AVEC 4 PHARES
MIT 4 FAHRSCHEINWERFER
CON 4 FARI
CON 4 FARI

Tractor Cab Cabine Tracteur Schlepper−Cabine Cabina Cabina De Tractor	Cladding Habillage Verkleidung Leggera Revestimiento	110-70	United States Only Etats Unis Seulement Vereinigten Staaten Solo Per Stati Uniti Estados Unidos Solamente

1-ZU19-005-A

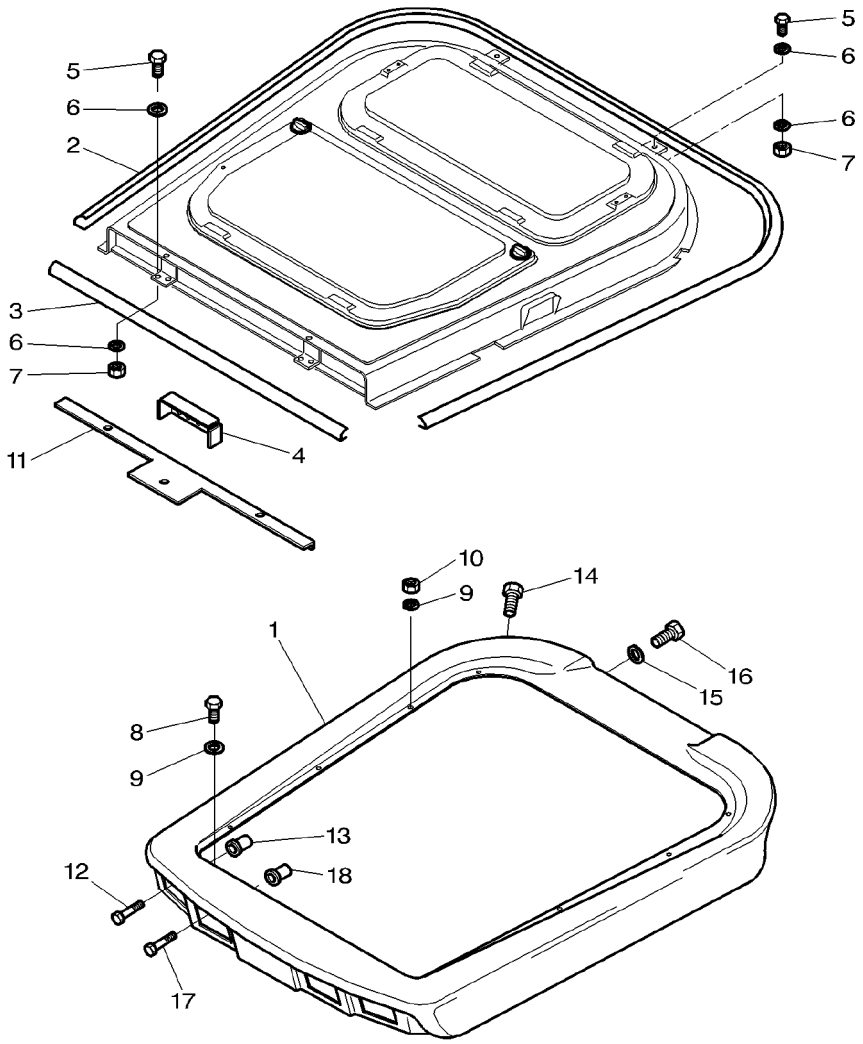

1	5015727M92			**1**	TRIM	ENJOLIVEUR FINITURA	ZIERLEISTE TAPIZADO
2	**3714884M1**	◀▶ 3700 MM		**1**	GASKET	JOINT GUARNIZIONE	DICHTSCHEIBE EMPAQUETADURA.
3	**3714885M1**	◀▶ 1050 MM		**11**	GASKET	JOINT GUARNIZIONE	DICHTSCHEIBE EMPAQUETADURA.
4	5015730M3			**1**	COVER	COUVERCLE COPERCHIO	DECKEL CUBIERTA
5	339123X1	M8x20		**4**	SCREW METRIC	VIS METRIQUE VITE METRICA	SCHRAUBE METR TORNILLO METRICO
6	3010597X1	∅ 8 MM ∅ 22 MM		**8**	TAB WASHER	RONDELLE EVENT PIASTRINA SICUR	SICHERUNGSBLECH ARANDELA ALETA
7	339169X1	M8		**4**	NUT METRIC	ECROU METRIQUE DADO METRICO	MUTTER METRISCH TUERCA METRICO
8	339804X1	M6x25		**2**	SCREW METRIC	VIS METRIQUE VITE METRICA	SCHRAUBE METR TORNILLO METRICO
9	391038X1	∅ 6 MM ∅ 18 MM ⧗ 1,5 MM		**10**	WASHER METRIC	RONDELLE METR. RONDELLA METRICO	SCHEIBE METRISCH ARANDELA METRICO
10	**3010594X1**	M6		**8**	NUT METRIC	ECROU METRIQUE DADO METRICO	MUTTER METRISCH TUERCA METRICO
11	3780888M1			**1**	PLATE	PLAQUE PIASTRA	PLATTE PLATO
12	3010754X1	M5x60		**4**	SCREW	VIS VITE	SCHRAUBE TORNILLO
13	3580776M1	M5		**4**	NUT	ECROU DADO	MUTTER TUERCA
14	3019950X1	M5x50		**4**	SCREW	VIS VITE	SCHRAUBE TORNILLO
15	390972X1	∅ 8 MM ∅ 17 MM ⧗ 1,7 MM		**4**	WASHER METRIC	RONDELLE METR. RONDELLA METRICO	SCHEIBE METRISCH ARANDELA METRICO
16	339123X1	M8x20		**4**	SCREW METRIC	VIS METRIQUE VITE METRICA	SCHRAUBE METR TORNILLO METRICO
17	3009535X1	M4x30		**4**	SCREW	VIS VITE	SCHRAUBE TORNILLO
18	3713803M1	M4		**4**	NUT	ECROU DADO	MUTTER TUERCA

High Visibility Roof **Toit Haute Visibilite** **Dach Mit Sonnendach** **Tetto Alta Visibilita** **Tejado Alta Visibilidad**	**Cladding** **Habillage** **Dressieren** **Dressing** **Preparacion**	**110-75**

1-ZU54-001-B

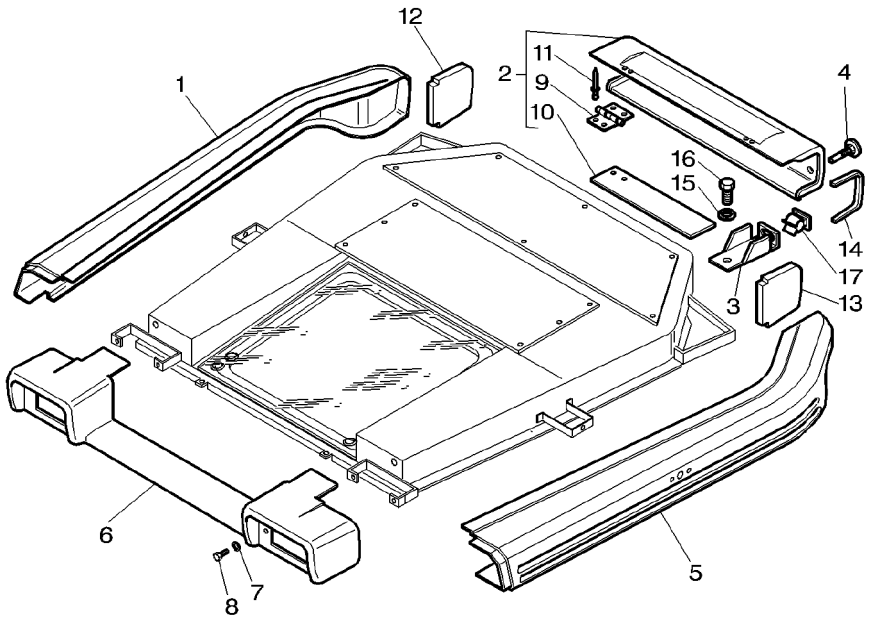

1	3777399M1	▶	**1**	TRIM	ENJOLIVEUR FINITURA	ZIERLEISTE TAPIZADO
2	3778744M91		**1**	VISOR	VISIERE PARASOLE	SONNENBLENDE VISERA
3	3778313M1	◀	**1**	SUPPORT	SUPPORT SUPPORTO	LAGERUNG DISPOS.DE SOSTEN
3	3778314M1	▶	**1**	SUPPORT	SUPPORT SUPPORTO	LAGERUNG DISPOS.DE SOSTEN
4	3778784M1		**2**	LATCH	VERROU SALISCENDI	RIEGEL CERROJO
5	3777398M1	◀	**1**	TRIM	ENJOLIVEUR FINITURA	ZIERLEISTE TAPIZADO
6	3777397M1		**1**	VISOR	VISIERE PARASOLE	SONNENBLENDE VISERA
7	391038X1		**4**	WASHER METRIC	RONDELLE METR. RONDELLA METRICO	SCHEIBE METRISCH ARANDELA METRICO
8	339666X1	M6X20	**4**	SCREW METRIC	VIS METRIQUE VITE METRICA	SCHRAUBE METR TORNILLO METRICO
9	3778703M1	2	**2**	HINGE	CHARNIERE CERNIERA	SCHARNIER BISAGRA
10	3778745M1	2	**1**	REINFORCEMENT	RENFORT RINFORZO	VERSTAERKUNG REFUERZO
11	3778746M1	2	**4**	RIVET	RIVET RIVETTO	NIET REMACHE
12	3778705M1	▶	**1**	PAD	TAMPON TAMPONE	KLOTZ ALMOHADILLA
13	3778706M1	◀	**1**	PAD	TAMPON TAMPONE	KLOTZ ALMOHADILLA
14	3778785M1	25X20X230MM	**2**	GASKET	JOINT GUARNIZIONE	DICHTSCHEIBE EMPAQUETADURA.
15	339123X1	M8X20	**2**	SCREW METRIC	VIS METRIQUE VITE METRICA	SCHRAUBE METR TORNILLO METRICO
16	3010597X1		**2**	TAB WASHER	RONDELLE EVENT PIASTRINA SICUR	SICHERUNGSBLECH ARANDELA ALETA
17	3713226M1		**2**	BRIDLE	BRIDE BRIGLIA	SPANNBAND BRIDA

Tractor Cab	Cladding	110-80	With Dynashift
Cabine Tracteur	Habillage		Avec Dynashift
Schlepper-Cabine	Verkleidung		Mit Dynashift
Cabina	Leggera		Con Dynashift
Cabina De Tractor	Revestimiento		Con Dynashift

1-ZU19-007-B

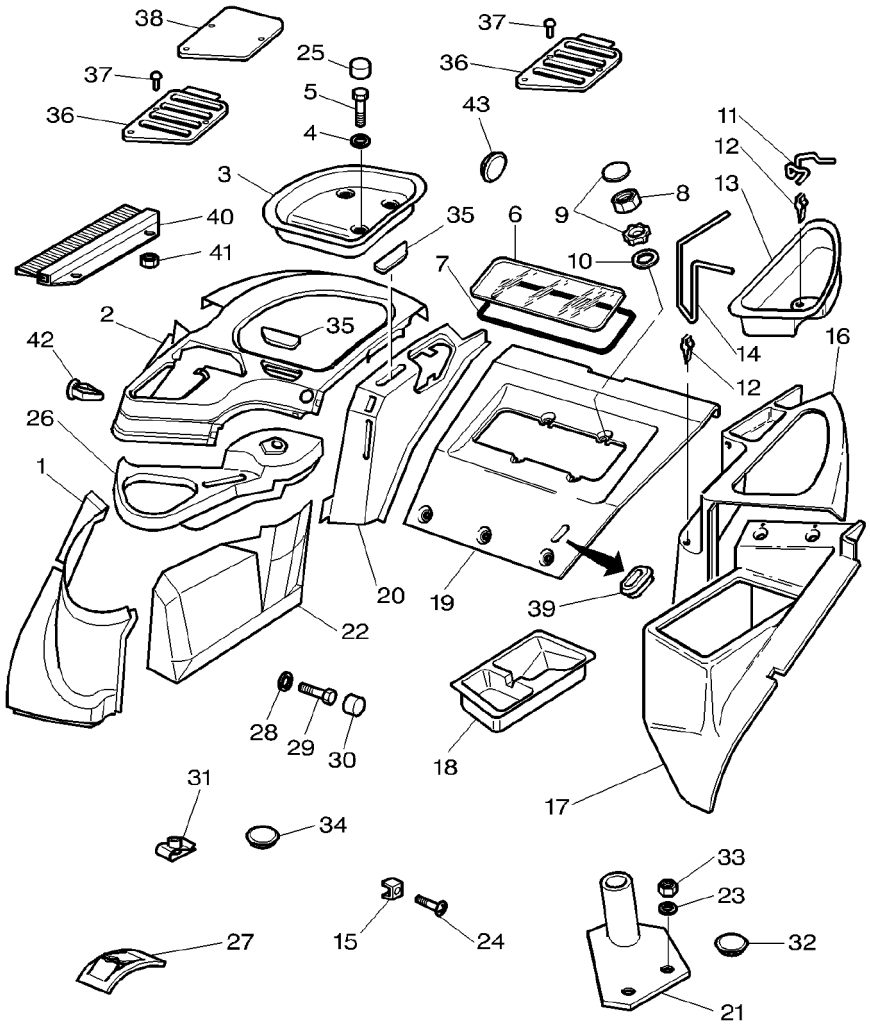

1	3780666M1	▶	**1**	PLATE CLAMPING	PLATINE PIASTRA APPOGGIO	KLEMMPLATTE PLACA DE ABRAZO
2	3778055M1		**1**	PLATE CLAMPING	PLATINE PIASTRA APPOGGIO	KLEMMPLATTE PLACA DE ABRAZO
3	3712410M1	▶	**1**	POCKET	POCHE SACCA	TASCHE BOLSA
4	390597X1	∅ 10MM	**4**	WASHER METRIC	RONDELLE METR. RONDELLA METRICO	SCHEIBE METRISCH ARANDELA METRICO
5	339282X1	M10 X 16	**4**	SCREW METRIC	VIS METRIQUE VITE METRICA	SCHRAUBE METR TORNILLO METRICO
6	3714482M1		**1**	WINDOW	GLACE FINESTRINO	FENSTER VENTANA
7	3714481M1		**1**	GASKET	JOINT GUARNIZIONE	DICHTSCHEIBE EMPAQUETADURA.
8	339169X1		**4**	NUT METRIC	ECROU METRIQUE DADO METRICO	MUTTER METRISCH TUERCA METRICO
9	3619241M1		**4**	BUTTON	BOUTON PULSANTE	KNOPFTASTE PULSADOR
10	390972X1		**4**	WASHER METRIC	RONDELLE METR. RONDELLA METRICO	SCHEIBE METRISCH ARANDELA METRICO
11	3713500M2		**1**	STEM	TIGE STELO	STIEL VASTAGO
12	3713616M1		**2**	CLIP	CLIP FERMAGLIO	SCHELLE CRAPA RETEN
13	3712414M1	◀	**1**	POCKET	POCHE SACCA	TASCHE BOLSA
14	3713501M1		**1**	STEM	TIGE STELO	STIEL VASTAGO
15	**3714235M1**	M5	**8**	NUT	ECROU DADO	MUTTER TUERCA
16	3712412M1		**1**	PANEL	PANNEAU PANNELLO	VERKL.BLECH PANEL
17	3712413M2		**1**	PANEL	PANNEAU PANNELLO	VERKL.BLECH PANEL
17	3715179M2	[B]	**1**	PANEL	PANNEAU PANNELLO	VERKL.BLECH PANEL
18	3712925M1		**1**	POCKET	POCHE SACCA	TASCHE BOLSA
19	3712421M2		**1**	REAR WINDOW	LUNETTE FINESTRINO POST.	RUECKFENSTER VENTANA TRASERA
20	3712408M1		**1**	PANEL	PANNEAU PANNELLO	VERKL.BLECH PANEL
21	**3714666M1**		**1**	SUPPORT	SUPPORT SUPPORTO	LAGERUNG DISPOS.DE SOSTEN
22	3780667M1		**1**	PLATE	PLAQUE PIASTRA	PLATTE PLATO
22	3782666M1	[H]	**1**	PLATE CLAMPING	PLATINE PIASTRA APPOGGIO	KLEMMPLATTE PLACA DE ABRAZO
23	22428X		**2**	LOCK WASHER	RONDELLE FREIN ROSETTA ELASTICA	FEDERRING ARANDELA GROWER
24	**3010506X1**	M5X16	**21**	SCREW	VIS VITE	SCHRAUBE TORNILLO

Tractor Cab **Cabine Tracteur** **Schlepper−Cabine** **Cabina** **Cabina De Tractor**	**Cladding** **Habillage** **Verkleidung** **Leggera** **Revestimiento**	**110-80**	**With Dynashift** **Avec Dynashift** **Mit Dynashift** **Con Dynashift** **Con Dynashift**

1-ZU19-007-B

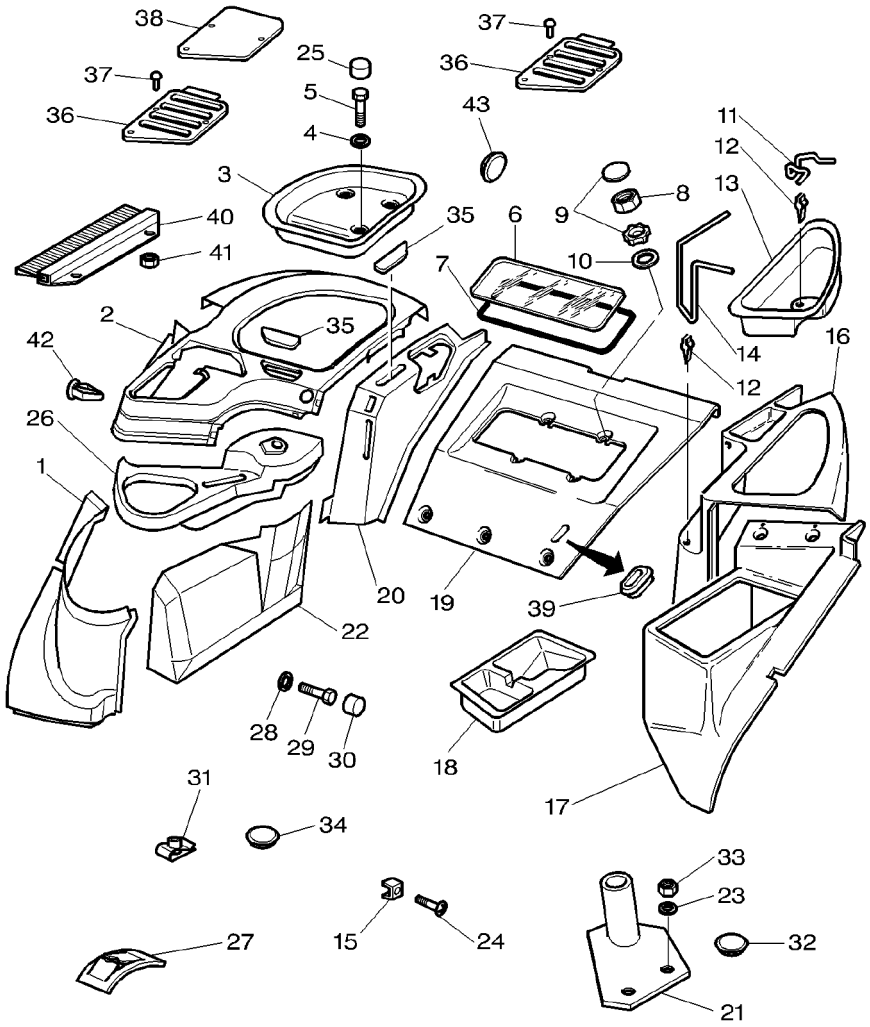

24	3010578X1	M5X10	
25	3619609M1		
26	3780665M1	[D]	
27	3714529M1		
28	3715991M1		
29	339123X1		
30	3616277M1		
31	3715142M1	⧗ 3/5MM	
31	3715143M1	⧗ 0,5/4MM	
32	3580982M1	[A]	
33	339169X1	M8	
34	3713587M1	[FG] ∅ 22MM	
35	3712984M1	[FG]	
36	3778479M1	[C]	
37	**3010506X1**	[C] ∅ 13/19MM	
38	3778506M1	[H]	
39	3715170M1		
40	3778790M1		
41	1441917X1		
42	3780626M1		
43	3041932M1		

[A] WITHOUT ROTATING LIGHT
SANS GYROPHARE
OHNE SUCHERLEUCHT
SENZA GIROPHARO
SIN GIROFARO

3	SCREW	VIS VITE	SCHRAUBE TORNILLO
4	HELMET	CAPUCHON CASCO	SCHUTZHELM CASCO
1	PLATE CLAMPING	PLATINE PIASTRA APPOGGIO	KLEMMPLATTE PLACA DE ABRAZO
4	NUT SPECIAL	ECROU SPECIAL DADO SPECIALE	SPEZIALMUTTER TUERCA ESPECIAL
1	SPACER	ENTRETOISE DISTANZIALE	ABSTANDSTUECK PIEZA DISTANCIA
1	SCREW METRIC	VIS METRIQUE VITE METRICA	SCHRAUBE METR TORNILLO METRICO
1	HELMET	CAPUCHON CASCO	SCHUTZHELM CASCO
17	NUT	ECROU DADO	MUTTER TUERCA
3	NUT	ECROU DADO	MUTTER TUERCA
1	PLUG	BOUCHON TAPPO	VERSCHL.STOPFEN TAPON
2	NUT METRIC	ECROU METRIQUE DADO METRICO	MUTTER METRISCH TUERCA METRICO
X	PLUG	BOUCHON TAPPO	VERSCHL.STOPFEN TAPON
X	PLATE	PLAQUE PIASTRA	PLATTE PLATO
1	PLUG	BOUCHON TAPPO	VERSCHL.STOPFEN TAPON
7	SCREW	VIS VITE	SCHRAUBE TORNILLO
1	PLATE	PLAQUE PIASTRA	PLATTE PLATO
1	TAP	OBTURATEUR TAPPO*	HAHN GRIFO
1	PROFILE	PROFILE PROFILO	PROFIL PERFIL
2	LOCKNUT	ECROU BLOCAGE AUTOBLOCCANTE	FLACHMUTTER CONTRATUERCA
2	TIE	ATTACHE TRAVERSA ATTACCO	KUPPL.STANGE BARRA DE ENLACE
1	PLUG	BOUCHON TAPPO	VERSCHL.STOPFEN TAPON

Tractor Cab Cabine Tracteur Schlepper−Cabine Cabina Cabina De Tractor	Cladding Habillage Verkleidung Leggera Revestimiento	110-80	With Dynashift Avec Dynashift Mit Dynashift Con Dynashift Con Dynashift

1-ZU19-007-B

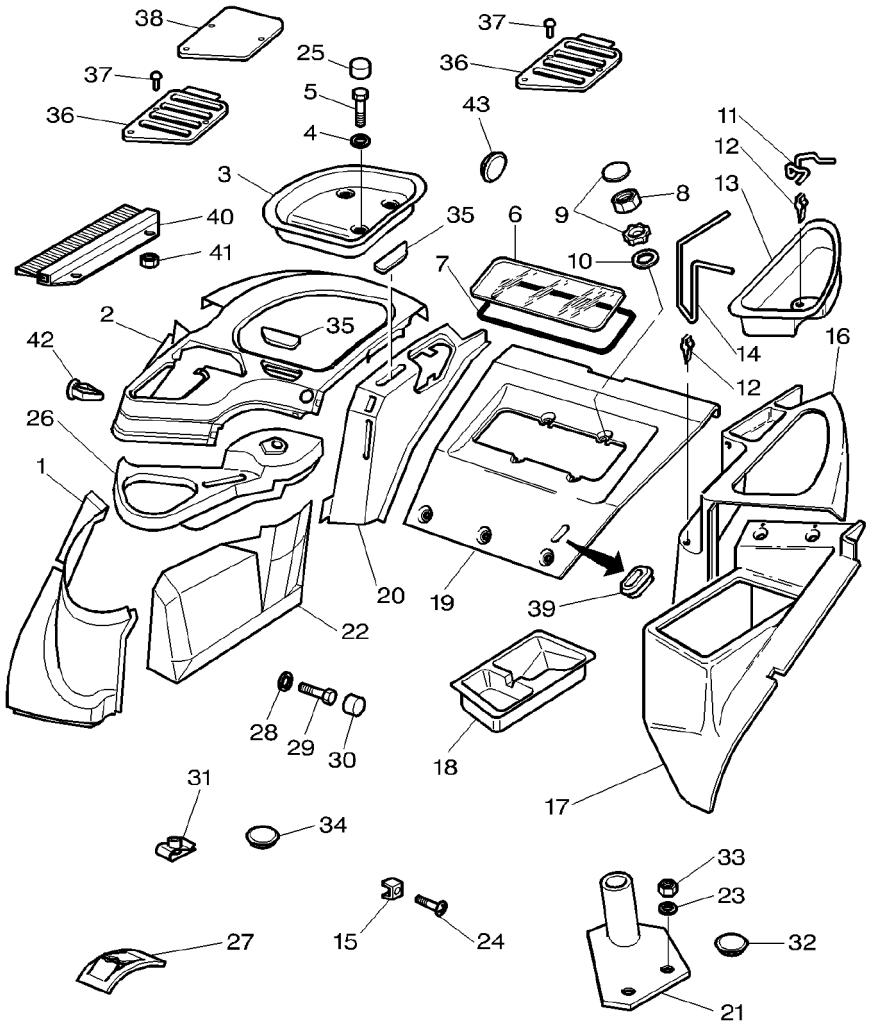

[B] WITHOUT SECONDARY SEAT
SANS SIEGE SECONDAIRE
OHNE BEIFAMBERSITZ
SENSA SEDILE SECONDARIO
SIN ASIENTO

[C] WITHOUT DISTRIBUTOR
SANS DISTRIBUTEUR
OHNE VERTEILER
SENZA DISTRIBUTORE
SIN DISTRIBUIDOR

[D] WITHOUT REVERSING GEAR MANUAL
SANS INVERSEUR MANUEL
OHNE HANDSCHALTGETRIEBE
SENZA INVERTITORE MANUALE
SIN INVERSORE MANUAL

[F] WITHOUT AUTOMATIC HITCH
SANS CROCHET AUTOMATIQUE
OHNE AUTOMATISCHE ANHAENGEKUPPLUNG
SENZA GANCIO AUTOMATICO
SIN ENGANCHE AUTOMATICO

[G] LESS PTO
SANS PTO
OHNE PTO
SENZA PTO
SIN PTO

[H] SOUTHERN VERSION
VERSION SANS RELEVAGE
UBERSETZUNG SOUTHERN
VERSIONE SOUTHERN
VERSION SOUTHERN

Tractor Cab Cabine Tracteur Schlepper−Cabine Cabina Cabina De Tractor	Cladding Habillage Verkleidung Leggera Revestimiento	110-85	With Full Powershift Avec Full Powershift Mit Full Powershift Con Full Powershift Con Full Powershift

1-ZU19-006-B

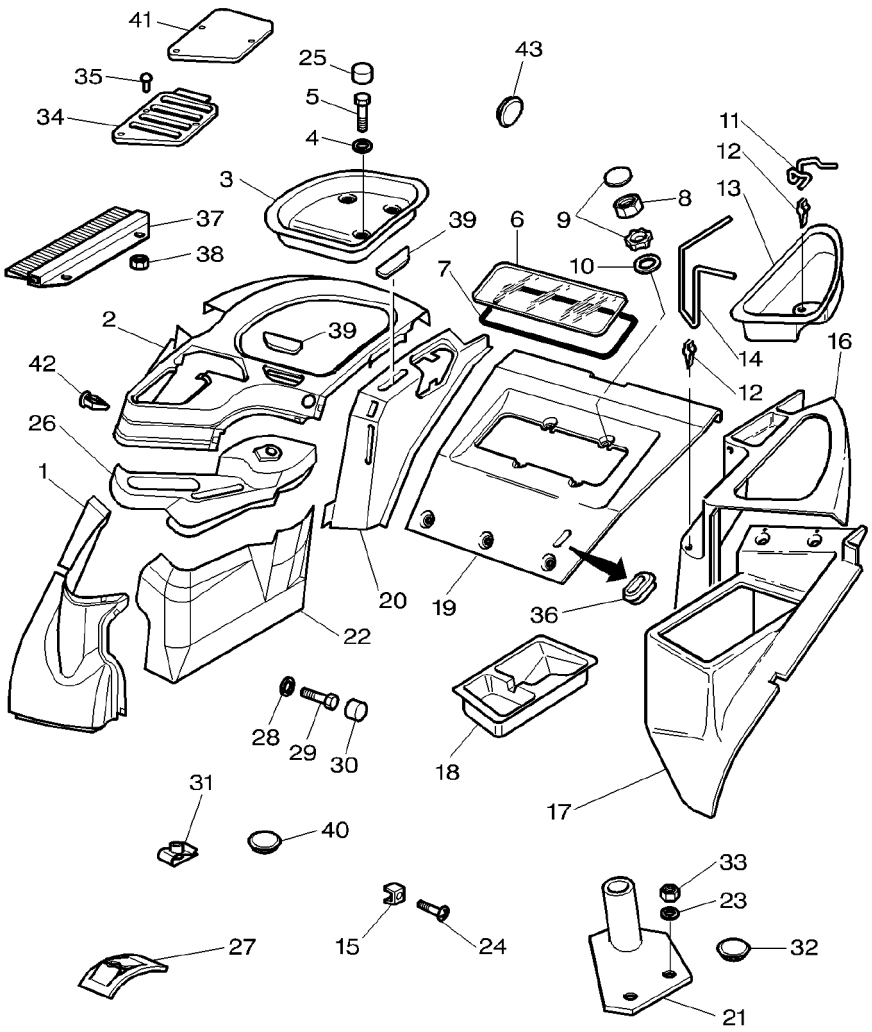

1	3778252M2	▶	1	PLATE CLAMPING	PLATINE PIASTRA APPOGGIO	KLEMMPLATTE PLACA DE ABRAZO
2	3778055M1		1	PLATE CLAMPING	PLATINE PIASTRA APPOGGIO	KLEMMPLATTE PLACA DE ABRAZO
3	3712410M1	▶	1	POCKET	POCHE SACCA	TASCHE BOLSA
4	390597X1	∅ 10MM	4	WASHER METRIC	RONDELLE METR. RONDELLA METRICO	SCHEIBE METRISCH ARANDELA METRICO
5	339282X1	M10 X 16	4	SCREW METRIC	VIS METRIQUE VITE METRICA	SCHRAUBE METR TORNILLO METRICO
6	3714482M1		1	WINDOW	GLACE FINESTRINO	FENSTER VENTANA
7	3714481M1		1	GASKET	JOINT GUARNIZIONE	DICHTSCHEIBE EMPAQUETADURA.
8	339169X1		4	NUT METRIC	ECROU METRIQUE DADO METRICO	MUTTER METRISCH TUERCA METRICO
9	3619241M1		4	BUTTON	BOUTON PULSANTE	KNOPFTASTE PULSADOR
10	390972X1		4	WASHER METRIC	RONDELLE METR. RONDELLA METRICO	SCHEIBE METRISCH ARANDELA METRICO
11	3713500M2		1	STEM	TIGE STELO	STIEL VASTAGO
12	3713616M1		2	CLIP	CLIP FERMAGLIO	SCHELLE CRAPA RETEN
13	3712414M1	◀	1	POCKET	POCHE SACCA	TASCHE BOLSA
14	3713501M1		1	STEM	TIGE STELO	STIEL VASTAGO
15	**3714235M1**	M5	8	NUT	ECROU DADO	MUTTER TUERCA
16	3712412M1		1	PANEL	PANNEAU PANNELLO	VERKL.BLECH PANEL
17	3712413M2		1	PANEL	PANNEAU PANNELLO	VERKL.BLECH PANEL
17	3715179M2	[E]	1	PANEL	PANNEAU PANNELLO	VERKL.BLECH PANEL
18	3712925M1		1	POCKET	POCHE SACCA	TASCHE BOLSA
19	3712421M2		1	REAR WINDOW	LUNETTE FINESTRINO POST.	RUECKFENSTER VENTANA TRASERA
20	3712408M1		1	PANEL	PANNEAU PANNELLO	VERKL.BLECH PANEL
21	**3714666M1**		1	SUPPORT	SUPPORT SUPPORTO	LAGERUNG DISPOS.DE SOSTEN
22	3778253M2		1	PANEL	PANNEAU PANNELLO	VERKL.BLECH PANEL
23	339024X1		2	WASHER METRIC	RONDELLE METR. RONDELLA METRICO	SCHEIBE METRISCH ARANDELA METRICO
24	**3010506X1**	M5X16	21	SCREW	VIS VITE	SCHRAUBE TORNILLO
24	3010578X1	M5X10	2	SCREW	VIS VITE	SCHRAUBE TORNILLO

Tractor Cab Cabine Tracteur Schlepper−Cabine Cabina Cabina De Tractor	Cladding Habillage Verkleidung Leggera Revestimiento	110-85	With Full Powershift Avec Full Powershift Mit Full Powershift Con Full Powershift Con Full Powershift

1-ZU19-006-B

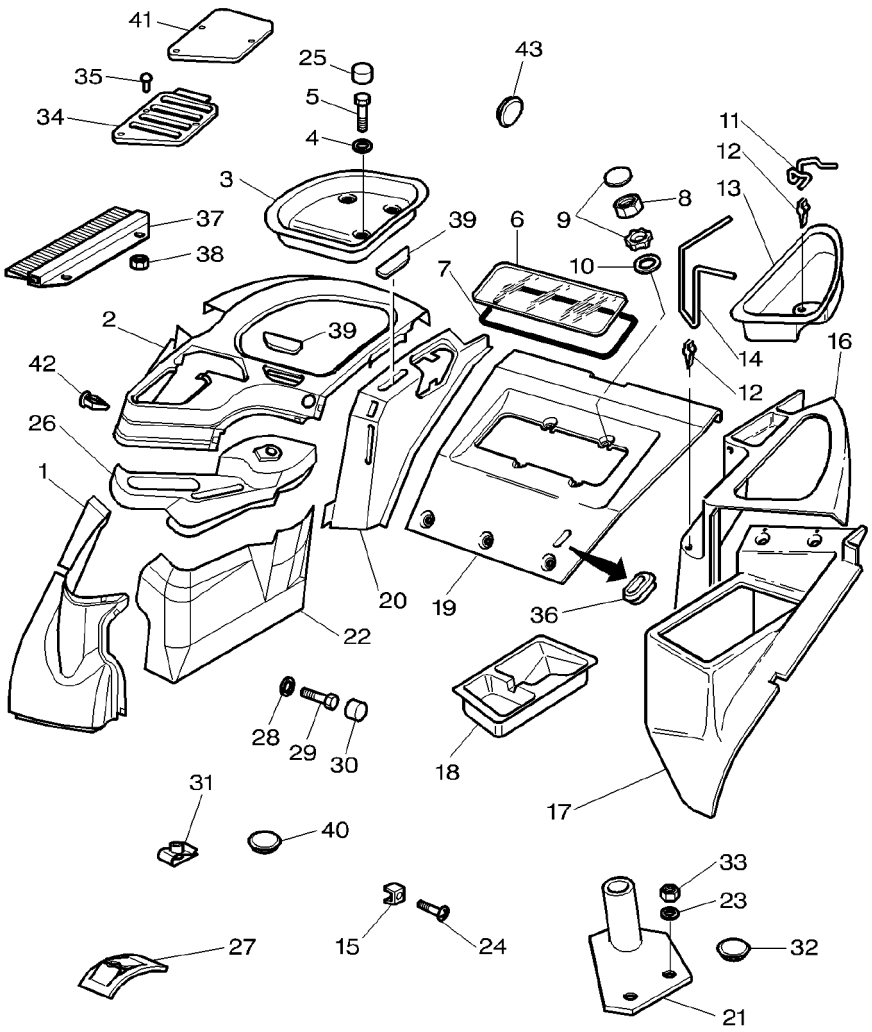

25	3619609M1		4	HELMET	CAPUCHON CASCO	SCHUTZHELM CASCO
26	3778251M1	[C]	1	PLATE CLAMPING	PLATINE PIASTRA APPOGGIO	KLEMMPLATTE PLACA DE ABRAZO
26	3778426M1	[D]	1	PLATE CLAMPING	PLATINE PIASTRA APPOGGIO	KLEMMPLATTE PLACA DE ABRAZO
27	3714529M1		4	NUT SPECIAL	ECROU SPECIAL DADO SPECIALE	SPEZIALMUTTER TUERCA ESPECIAL
28	3715991M1		1	SPACER	ENTRETOISE DISTANZIALE	ABSTANDSTUECK PIEZA DISTANCIA
29	339123X1		1	SCREW METRIC	VIS METRIQUE VITE METRICA	SCHRAUBE METR TORNILLO METRICO
30	3616277M1		1	HELMET	CAPUCHON CASCO	SCHUTZHELM CASCO
31	3715142M1	⧗ 3/5MM	11	NUT	ECROU DADO	MUTTER TUERCA
31	3715143M1	⧗ 0,5/4MM	3	NUT	ECROU DADO	MUTTER TUERCA
32	3580982M1	[A]	1	PLUG	BOUCHON TAPPO	VERSCHL.STOPFEN TAPON
33	339169X1	M8	2	NUT METRIC	ECROU METRIQUE DADO METRICO	MUTTER METRISCH TUERCA METRICO
34	3778479M1	[B]	1	PLUG	BOUCHON TAPPO	VERSCHL.STOPFEN TAPON
35	**3010506X1**		7	SCREW	VIS VITE	SCHRAUBE TORNILLO
36	3715170M1	⇒ 3715169M1	1	TAP	OBTURATEUR TAPPO*	HAHN GRIFO
37	3778790M1		1	PROFILE	PROFILE PROFILO	PROFIL PERFIL
38	1441917X1		2	LOCKNUT	ECROU BLOCAGE AUTOBLOCCANTE	FLACHMUTTER CONTRATUERCA
39	3712984M1	[FG]	X	PLATE	PLAQUE PIASTRA	PLATTE PLATO
40	3713587M1	[FG] ∅ 22MM	X	PLUG	BOUCHON TAPPO	VERSCHL.STOPFEN TAPON
41	3778506M1	[H]	1	PLATE	PLAQUE PIASTRA	PLATTE PLATO
42	3780626M1		4	TIE	ATTACHE TRAVERSA ATTACCO	KUPPL.STANGE BARRA DE ENLACE
43	3041932M1	∅ 13/19MM	1	PLUG	BOUCHON TAPPO	VERSCHL.STOPFEN TAPON

[A] WITHOUT ROTATING LIGHT
SANS GYROPHARE
OHNE SUCHERLEUCHT
SENZA GIROPHARO
SIN GIROFARO

Tractor Cab Cabine Tracteur Schlepper−Cabine Cabina Cabina De Tractor	Cladding Habillage Verkleidung Leggera Revestimiento	110-85	With Full Powershift Avec Full Powershift Mit Full Powershift Con Full Powershift Con Full Powershift

1-ZU19-006-B

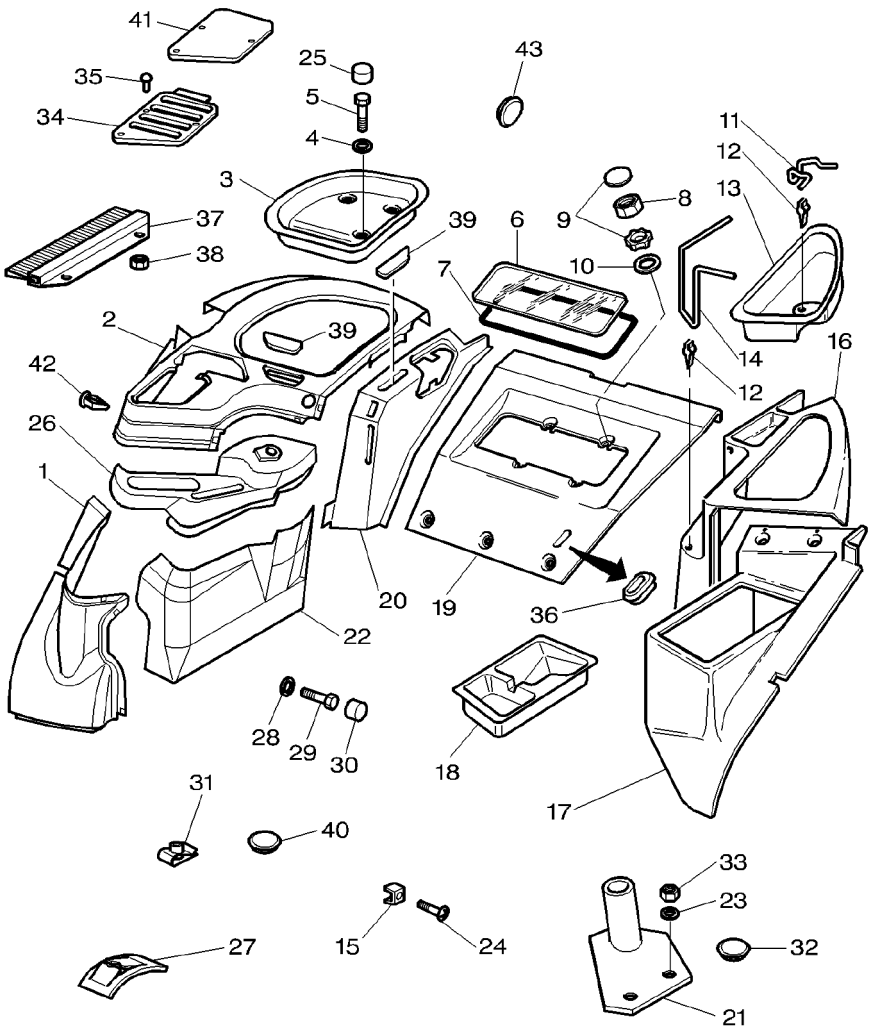

[B] WITHOUT DISTRIBUTOR
SANS DISTRIBUTEUR
OHNE VERTEILER
SENZA DISTRIBUTORE
SIN DISTRIBUIDOR

[C] WITH REVERSING GEAR MANUAL
AVEC INVERSEUR MANUEL
MIT HANDSCHALTGETRIEBE
CON INVERTITORE MANUALE
CON INVERSORE MANUAL

[D] WITHOUT REVERSING GEAR MANUAL
SANS INVERSEUR MANUEL
OHNE HANDSCHALTGETRIEBE
SENZA INVERTITORE MANUALE
SIN INVERSORE MANUAL

[E] WITHOUT SECONDARY SEAT
SANS SIEGE SECONDAIRE
OHNE BEIFAMBERSITZ
SENSA SEDILE SECONDARIO
SIN ASIENTO

[F] WITHOUT AUTOMATIC HITCH
SANS CROCHET AUTOMATIQUE
OHNE AUTOMATISCHE ANHAENGEKUPPLUNG
SENZA GANCIO AUTOMATICO
SIN ENGANCHE AUTOMATICO

[G] LESS PTO
SANS PTO
OHNE PTO
SENZA PTO
SIN PTO

[H] SOUTHERN VERSION
VERSION SANS RELEVAGE
UBERSETZUNG SOUTHERN
VERSIONE SOUTHERN
VERSION SOUTHERN

Instrument Panel Cladding
Habillage Tableau De Bord
Einfassung Fuer Instr.−Brett
Cruscotto Cabina
Revestimiento Panel Instrumentos

110-90

1-ZU20-001-B

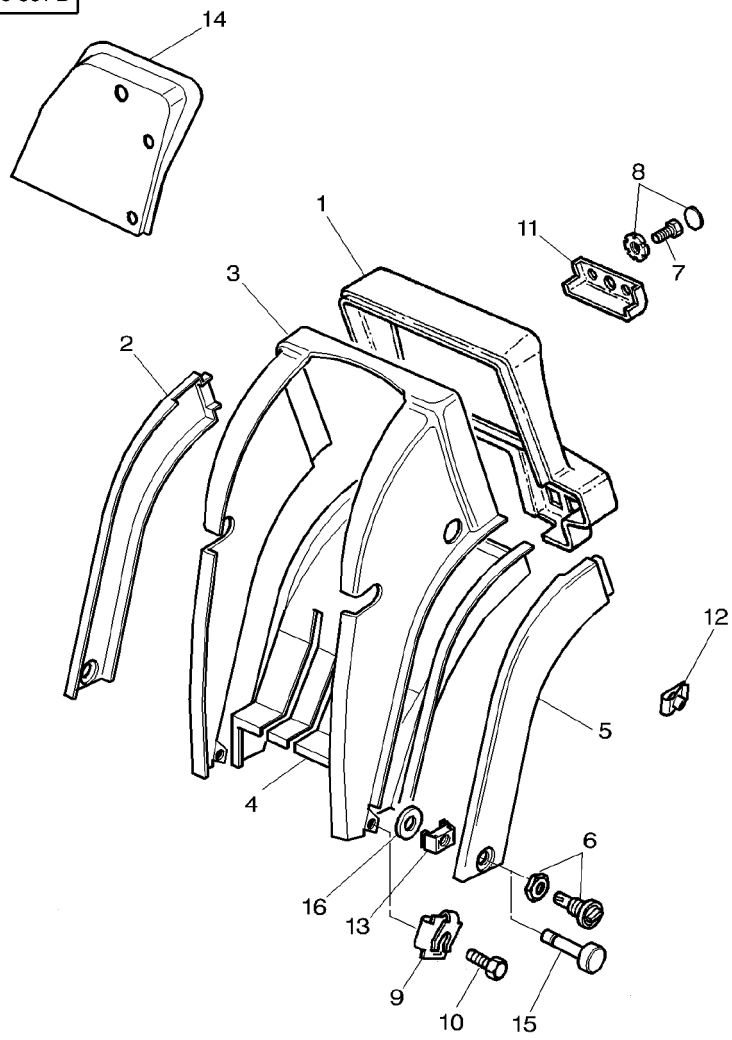

1	3777603M1		**1**	PLATE CLAMPING	PLATINE PIASTRA APPOGGIO	KLEMMPLATTE PLACA DE ABRAZO
2	3712420M1	▶ H259015 ◀	**1**	FACING	GARNITURE RIVESTIMENTO	VERBLENDUNG PARAMENTO
2	3712420M2	▶ H259016 ◀	**1**	FACING	GARNITURE RIVESTIMENTO	VERBLENDUNG PARAMENTO
3	3777604M1		**1**	ENVELOPE	ENVELOPPE BUSTA	BEUTEL SOBRE
3	3780399M1	[A]	**1**	ENVELOPE	ENVELOPPE BUSTA	BEUTEL SOBRE
4	3712417M1		**1**	ENVELOPE	ENVELOPPE BUSTA	BEUTEL SOBRE
5	3712419M1	▶ H259015 ◀	**1**	FACING	GARNITURE RIVESTIMENTO	VERBLENDUNG PARAMENTO
5	3712419M2	▶ H259016 ◀	**1**	FACING	GARNITURE RIVESTIMENTO	VERBLENDUNG PARAMENTO
6	3618739M1	▶ H259015	**2**	BUTTON	BOUTON PULSANTE	KNOPFTASTE PULSADOR
7	339560X1	M6 X 16	**2**	SCREW METRIC	VIS METRIQUE VITE METRICA	SCHRAUBE METR TORNILLO METRICO
8	3713550M1		**2**	LATCH	VERROU SALISCENDI	RIEGEL CERROJO
9	3388231M1	M5	**1**	NUT	ECROU DADO	MUTTER TUERCA
10	**3010506X1**	M5 X 16	**7**	SCREW	VIS VITE	SCHRAUBE TORNILLO
10	3010578X1	M5X10	**2**	SCREW	VIS VITE	SCHRAUBE TORNILLO
11	3714209M1		**1**	PLATE	PLAQUE PIASTRA	PLATTE PLATO
12	3715142M1	⧗ 3/5MM	**2**	NUT	ECROU DADO	MUTTER TUERCA
12	3715143M1	⧗ 0,5/4MM	**1**	NUT	ECROU DADO	MUTTER TUERCA
13	3618738M1	▶ H259015	**2**	CLAMP	COLLIER FASCETTA	HALTESCHELLE ABRAZADERA
13	3782697M1	▶ H259016	**2**	CLAMP	COLLIER FASCETTA	HALTESCHELLE ABRAZADERA
14	3777606M1		**1**	ENVELOPE	ENVELOPPE BUSTA	BEUTEL SOBRE
15	3782696M1	▶ H259016	**2**	BUTTON	BOUTON PULSANTE	KNOPFTASTE PULSADOR
16	3782892M1	▶ H259016	**2**	WASHER	RONDELLE RONDELLA	UNTERLEGSCHEIBE ARANDELA

[A] WITH MANUAL SHUTTLE SHIFT LEVERS LEFT HAND CONTROLS
AVEC LEVIER D'INVERSEUR MANUEL COMMANDE A GAUCHE
MIT SCHALTHEBEL HANDSCHALTUNG LINKS ANTRIEB
CON LEVE COMANDO DI INVERSORE MANUALE COMANDI SINISTRA
CON PALANCAS DE MANDO INVERSOR MECANICO MANDOS IZQUIERDA

1-ZU11-002-B

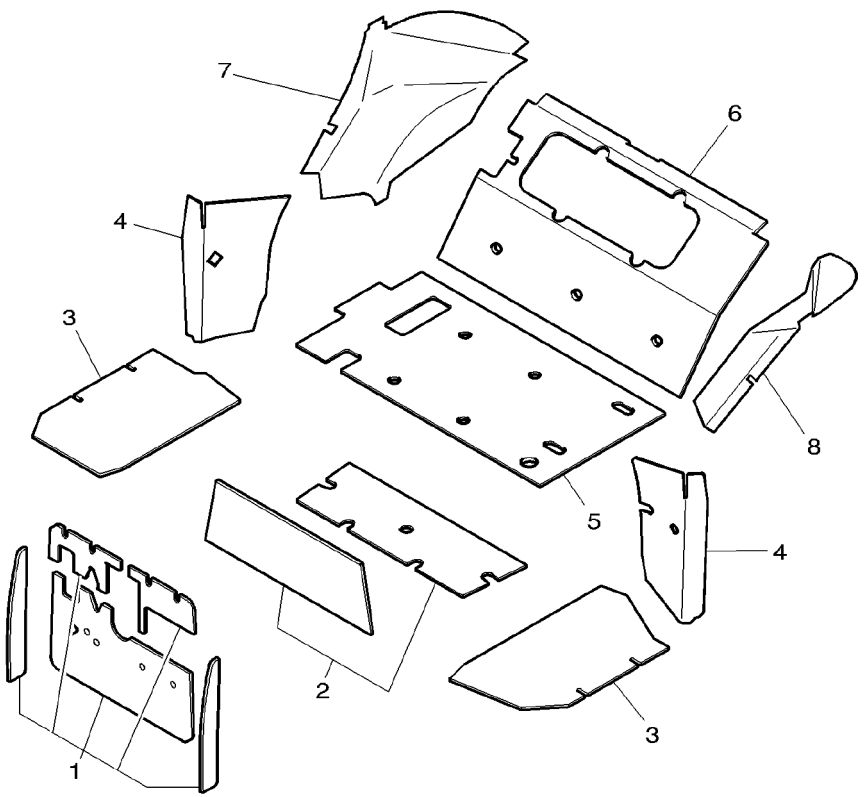

1	3714448M94	[B]	**1**	SOUND REDUCTION	INSONORISATION RIDUZIONE SUONO	SCHALLDAEMMUNG REDUCTOR SONIDO
1	3713870M93	[A]	**1**	SOUND REDUCTION	INSONORISATION RIDUZIONE SUONO	SCHALLDAEMMUNG REDUCTOR SONIDO
2	3778445M91		**1**	SOUND REDUCTION	INSONORISATION RIDUZIONE SUONO	SCHALLDAEMMUNG REDUCTOR SONIDO
3	3713881M92		**1**	SOUND REDUCTION	INSONORISATION RIDUZIONE SUONO	SCHALLDAEMMUNG REDUCTOR SONIDO
4	3713884M93		**1**	SOUND REDUCTION	INSONORISATION RIDUZIONE SUONO	SCHALLDAEMMUNG REDUCTOR SONIDO
5	3713899M3		**1**	SOUND REDUCTION	INSONORISATION RIDUZIONE SUONO	SCHALLDAEMMUNG REDUCTOR SONIDO
6	3713898M5		**1**	SOUND REDUCTION	INSONORISATION RIDUZIONE SUONO	SCHALLDAEMMUNG REDUCTOR SONIDO
7	3713897M5	▶	**1**	SOUND REDUCTION	INSONORISATION RIDUZIONE SUONO	SCHALLDAEMMUNG REDUCTOR SONIDO
8	3713896M5	◀	**1**	SOUND REDUCTION	INSONORISATION RIDUZIONE SUONO	SCHALLDAEMMUNG REDUCTOR SONIDO

[A] WITH ASSISTED BRAKE
AVEC FREIN ASSISTE
MIT HILSKRAFTBREMSE
CON FRENO ASSISTITE
CON FRENO ASISTIDE

[B] WITH MECHANICAL BRAKES
AVEC FREIN MECANIQUE
MIT MECHANISCHE BREMSE
CON FRENI MECCANICO
CON FRENO MECANICO

1-ZU11-005-B

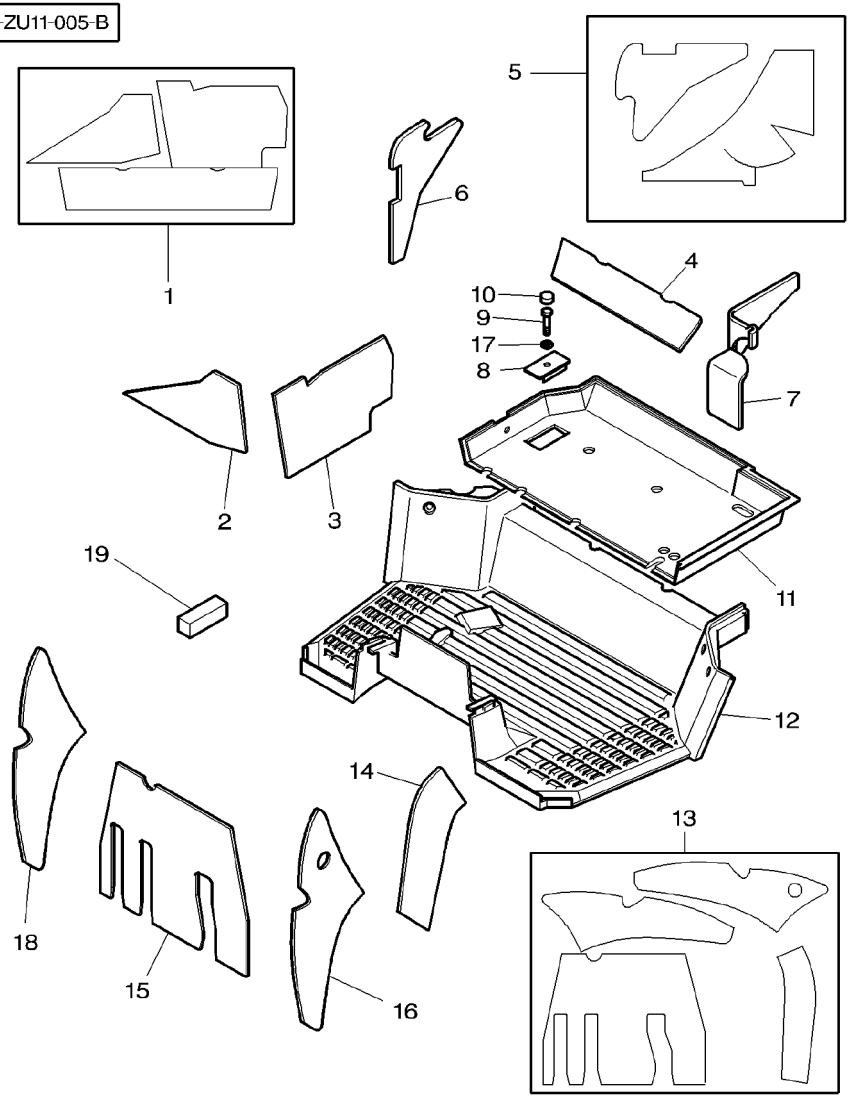

1	3782534M91	[A]	1	SOUND REDUCTION	INSONORISATION RIDUZIONE SUONO	SCHALLDAEMMUNG REDUCTOR SONIDO
1	3778448M92	[B]	1	SOUND REDUCTION	INSONORISATION RIDUZIONE SUONO	SCHALLDAEMMUNG REDUCTOR SONIDO
2		1 REF.1	1	SOUND REDUCTION	INSONORISATION RIDUZIONE SUONO	SCHALLDAEMMUNG REDUCTOR SONIDO
3		1 REF.1	1	SOUND REDUCTION	INSONORISATION RIDUZIONE SUONO	SCHALLDAEMMUNG REDUCTOR SONIDO
4		1 REF.1	1	SOUND REDUCTION	INSONORISATION RIDUZIONE SUONO	SCHALLDAEMMUNG REDUCTOR SONIDO
5	3778447M91		1	SOUND REDUCTION	INSONORISATION RIDUZIONE SUONO	SCHALLDAEMMUNG REDUCTOR SONIDO
6		5 REF.5	1	SOUND REDUCTION	INSONORISATION RIDUZIONE SUONO	SCHALLDAEMMUNG REDUCTOR SONIDO
7		5 REF.5	1	SOUND REDUCTION	INSONORISATION RIDUZIONE SUONO	SCHALLDAEMMUNG REDUCTOR SONIDO
8	3778789M1		1	HELMET	CAPUCHON CASCO	SCHUTZHELM CASCO
9	339124X1	M8X16	1	SCREW METRIC	VIS METRIQUE VITE METRICA	SCHRAUBE METR TORNILLO METRICO
10	3616277M1		1	HELMET	CAPUCHON CASCO	SCHUTZHELM CASCO
11	3777378M3		1	MAT	TAPIS STOINO	MATTE ALFOMBRA
12	3777377M2		1	MAT	TAPIS STOINO	MATTE ALFOMBRA
13	3778449M93		1	SOUND REDUCTION	INSONORISATION RIDUZIONE SUONO	SCHALLDAEMMUNG REDUCTOR SONIDO
14		13 REF.13	1	SOUND REDUCTION	INSONORISATION RIDUZIONE SUONO	SCHALLDAEMMUNG REDUCTOR SONIDO
15		13 REF.13	1	SOUND REDUCTION	INSONORISATION RIDUZIONE SUONO	SCHALLDAEMMUNG REDUCTOR SONIDO
16		13 REF.13	1	SOUND REDUCTION	INSONORISATION RIDUZIONE SUONO	SCHALLDAEMMUNG REDUCTOR SONIDO
17	390972X1		1	WASHER METRIC	RONDELLE METR. RONDELLA METRICO	SCHEIBE METRISCH ARANDELA METRICO
18		13 REF.13	1	SOUND REDUCTION	INSONORISATION RIDUZIONE SUONO	SCHALLDAEMMUNG REDUCTOR SONIDO
19	3779389M1	30X13X160MM	1	GASKET	JOINT GUARNIZIONE	DICHTSCHEIBE EMPAQUETADURA.

[A] FOR DYNASHIFT
POUR DYNASHIFT
FUER DYNASHIFT
PARA DYNASHIFT
PER DYNASHIFT

[B] WITH FULL POWERSHIFT
AVEC FULL POWERSHIFT
MIT FULL POWERSHIFT
CON FULL POWERSHIFT
CON FULL POWERSHIFT

1-ZU07-003-D

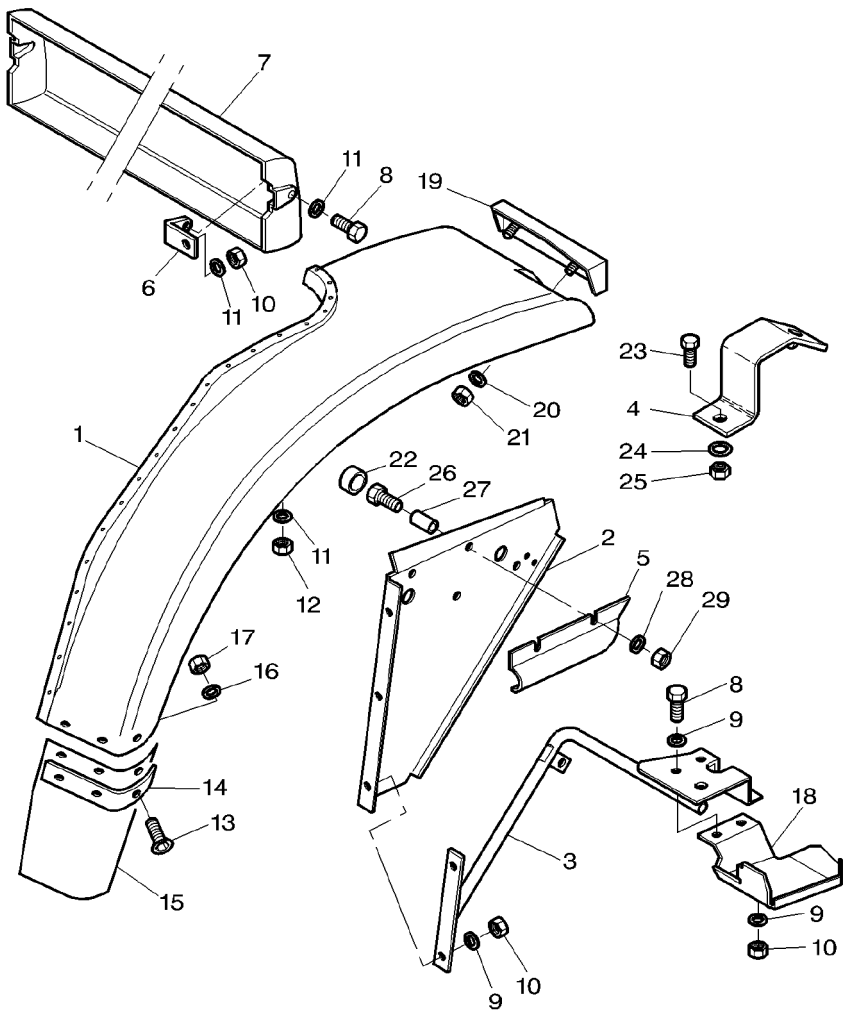

1	5015465M2	◀	**1**	FENDER	AILE PARAFANGO	KOTFLUEGEL GUARDABARRO
1	5015466M2	▶	**1**	FENDER	AILE PARAFANGO	KOTFLUEGEL GUARDABARRO
2	5015292M6	◀	**1**	SKIRT	JUPE BORDO	SCHUERZE FALDON
2	5015293M5	▶	**1**	SKIRT	JUPE BORDO	SCHUERZE FALDON
3	5015287M93	◀	**1**	SUPPORT	SUPPORT SUPPORTO	LAGERUNG DISPOS.DE SOSTEN
3	5015288M93	▶	**1**	SUPPORT	SUPPORT SUPPORTO	LAGERUNG DISPOS.DE SOSTEN
4	3783012M1		**1**	SUPPORT	SUPPORT SUPPORTO	LAGERUNG DISPOS.DE SOSTEN
5	3778897M1	◀	**1**	PROTECTOR	PROTECTEUR PROTETTORE	SCHUTZ PROTECTOR
5	3778898M1	▶	**1**	PROTECTOR	PROTECTEUR PROTETTORE	SCHUTZ PROTECTOR
6	5015298M93		**2**	STRAP	PATTE CORREGGIA	LASCHE FAJA
7	5015296M2		**1**	PANEL	PANNEAU PANNELLO	VERKL.BLECH PANEL
8	339123X1	M8x20	**14**	SCREW METRIC	VIS METRIQUE VITE METRICA	SCHRAUBE METR TORNILLO METRICO
9	385361X1	∅ 9 MM ∅ 17 MM ⧗ 3,2 MM	**20**	WASHER METRIC	RONDELLE METR. RONDELLA METRICO	SCHEIBE METRISCH ARANDELA METRICO
10	339169X1	M8	**24**	NUT METRIC	ECROU METRIQUE DADO METRICO	MUTTER METRISCH TUERCA METRICO
11	3010467X1		**18**	WASHER	RONDELLE RONDELLA	UNTERLEGSCHEIBE ARANDELA
12	394367X1	M8	**20**	LOCKNUT	ECROU BLOCAGE AUTOBLOCCANTE	FLACHMUTTER CONTRATUERCA
13	3010909X1	M8X20	**6**	SCREW	VIS VITE	SCHRAUBE TORNILLO
14	3782599M2		**2**	PLATE	PLAQUE PIASTRA	PLATTE PLATO
15	3781117M2	◀	**1**	EXTENSION	RALLONGE PROLUNGA	VERLAENGERUNG EXTENSION
15	3781118M2	▶	**1**	EXTENSION	RALLONGE PROLUNGA	VERLAENGERUNG EXTENSION
16	390972X1		**6**	WASHER METRIC	RONDELLE METR. RONDELLA METRICO	SCHEIBE METRISCH ARANDELA METRICO
17	394367X1	M8	**6**	LOCKNUT	ECROU BLOCAGE AUTOBLOCCANTE	FLACHMUTTER CONTRATUERCA
18	3781881M1	◀	**1**	COWL	GARANT CAPPOTTATURA	AUFSATZ CAPERUZA
18	3781882M1	▶	**1**	COWL	GARANT CAPPOTTATURA	AUFSATZ CAPERUZA
19	3781889M1	◀	**1**	SUPPORT	SUPPORT SUPPORTO	LAGERUNG DISPOS.DE SOSTEN
19	3781890M1	▶	**1**	SUPPORT	SUPPORT SUPPORTO	LAGERUNG DISPOS.DE SOSTEN

1-ZU07-003-D

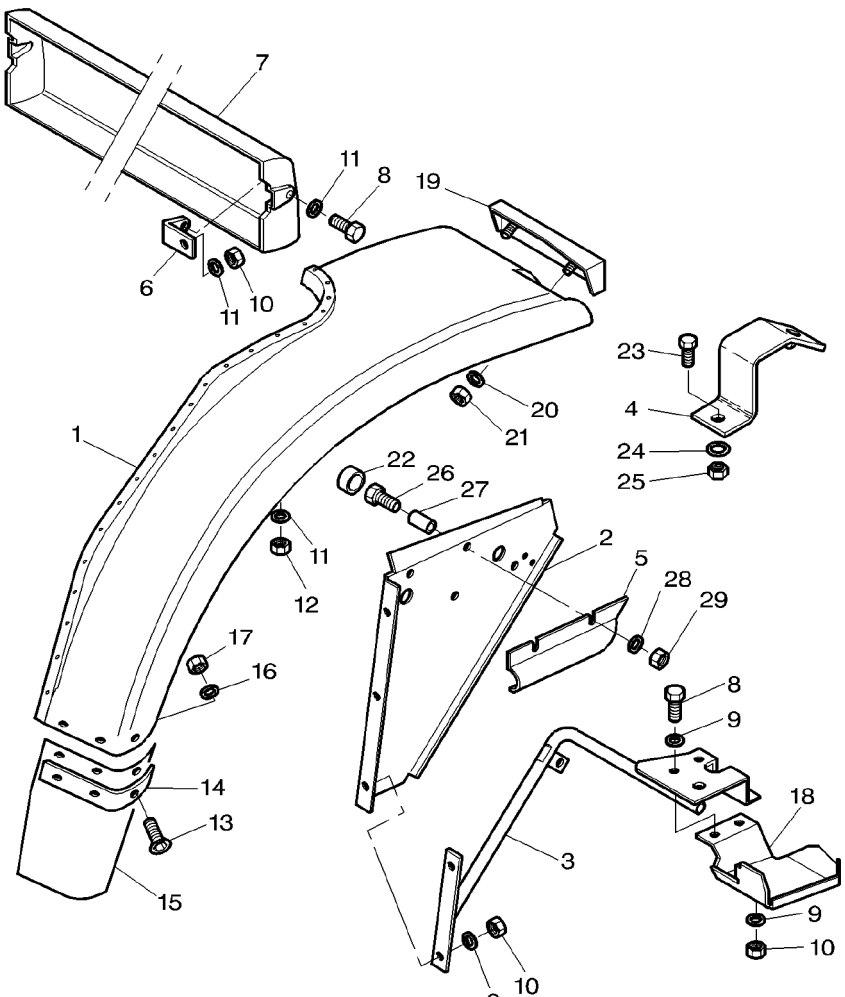

20	390469X1		**4**	WASHER METRIC	RONDELLE METR. RONDELLA METRICO	SCHEIBE METRISCH ARANDELA METRICO
21	1441494X1		**4**	NUT METRIC	ECROU METRIQUE DADO METRICO	MUTTER METRISCH TUERCA METRICO
22	3616277M1		**2**	HELMET	CAPUCHON CASCO	SCHUTZHELM CASCO
23	339123X1	M8x20	**1**	SCREW METRIC	VIS METRIQUE VITE METRICA	SCHRAUBE METR TORNILLO METRICO
24	390972X1	∅ 8-17X1,7	**1**	WASHER METRIC	RONDELLE METR. RONDELLA METRICO	SCHEIBE METRISCH ARANDELA METRICO
25	339169X1	M8	**1**	NUT METRIC	ECROU METRIQUE DADO METRICO	MUTTER METRISCH TUERCA METRICO
26	339291X1	M8X55	**2**	BOLT METRIC	BOULON METRIQUE BULLONE METRICO	MASCH.SCHRB MET PERNO METRICO
27	3781233M1		**1**	ROLL	ROULEAU FRANGIZOLLE	WALZE RULO
28	390972X1		**2**	WASHER METRIC	RONDELLE METR. RONDELLA METRICO	SCHEIBE METRISCH ARANDELA METRICO
29	394367X1	M8	**2**	LOCKNUT	ECROU BLOCAGE AUTOBLOCCANTE	FLACHMUTTER CONTRATUERCA

Fenders Extension
Extensions D'Ailes
Kotfuegelverlaengerung
Prolunghe Parafanghi
Prolong Guardabarro

1-ZU07-004-B

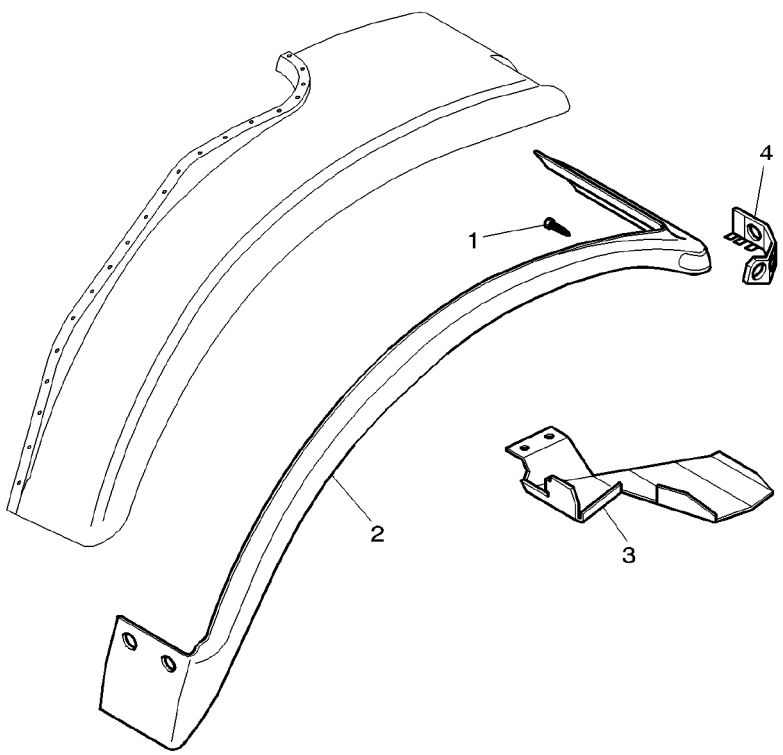

1	3782092M1			X	SCREW	VIS VITE	SCHRAUBE TORNILLO
2	3781447M2	◀		1	EXTENSION	RALLONGE PROLUNGA	VERLAENGERUNG EXTENSION
		⧓	115MM				
2	3781446M2	▶		1	EXTENSION	RALLONGE PROLUNGA	VERLAENGERUNG EXTENSION
		⧓	115MM				
2	3781449M2	◀		1	EXTENSION	RALLONGE PROLUNGA	VERLAENGERUNG EXTENSION
		⧓	205MM				
2	3781448M2	▶		1	EXTENSION	RALLONGE PROLUNGA	VERLAENGERUNG EXTENSION
		⧓	205MM				
3	3781883M4	[A]	◀	1	COWL	GARANT CAPPOTTATURA	AUFSATZ CAPERUZA
3	3781884M4	[A]	▶	1	COWL	GARANT CAPPOTTATURA	AUFSATZ CAPERUZA
3	3781885M4	[B]	◀	1	COWL	GARANT CAPPOTTATURA	AUFSATZ CAPERUZA
3	3781886M4	[B]	▶	1	COWL	GARANT CAPPOTTATURA	AUFSATZ CAPERUZA
4	3781891M2	◀		1	SUPPORT	SUPPORT SUPPORTO	LAGERUNG DISPOS.DE SOSTEN
4	3781892M2	▶		1	SUPPORT	SUPPORT SUPPORTO	LAGERUNG DISPOS.DE SOSTEN

[A] USED WITH 115MM EXTENSION FENDERS
UTILISE AVEC EXTENSION D AILE 115MM
VERWENDEN MIT 115MM AUSDEHNUNG KOTFLUEGEL
UTILIZZARE CON EXTENSION DI PARAFANGHI 115MM
UTILIZAR CON ESTENSIONE DE GUARDABARRO 115MM

[B] USED WITH 205MM EXTENSION FENDERS
UTILISE AVEC EXTENSION D AILE 205MM
VERWENDEN MIT 205MM AUSDEHNUNG KOTFLUEGEL
UTILIZZARE CON EXTENSION DI PARAFANGHI 205MM
UTILIZAR CON ESTENSIONE DE GUARDABARRO 205MM

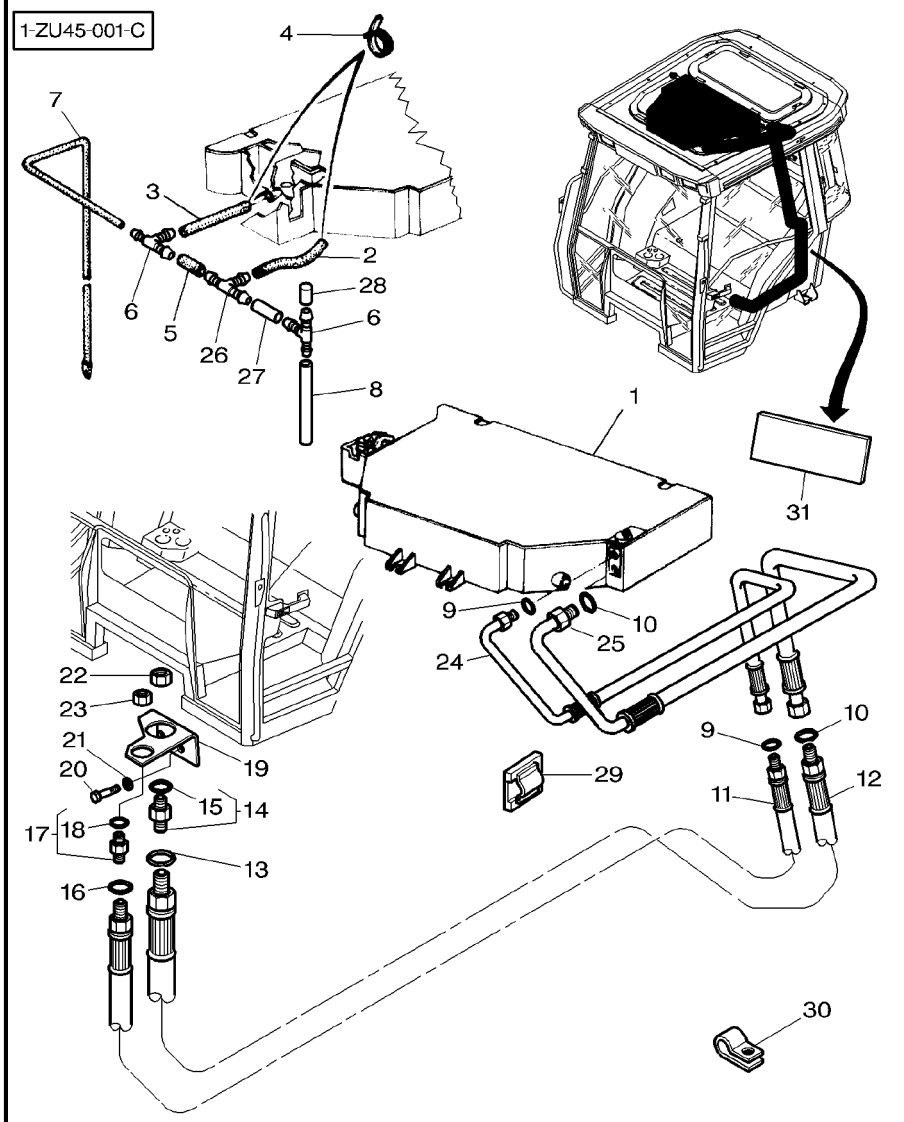

1	3713375M2			**1**	BOOT	COFFRE PARAPOLVERE	SCHUTZKAPPE PROTECCION
2	3777614M1	∅ 15,9–23MM ◀▶ 150MM		**2**	TUBE	TUBE TUBO	ROHR TUBO
3	3777616M1	∅ 15,9–23MM ◀▶ 195MM		**2**	TUBE	TUBE TUBO	ROHR TUBO
4	3000483X1	∅ 12–22MM		**4**	CLAMP	COLLIER FASCETTA	HALTESCHELLE ABRAZADERA
5	3777613M1	∅ 15,9–23MM ◀▶ 60MM		**2**	TUBE	TUBE TUBO	ROHR TUBO
6	3388779M1	∅ 16–16–08MM		**2**	UNION	RACCORD RACCORDO	VERSCHRAUBUNG RACOR
7	3713470M1	∅ 08–12 ◀▶ 165MM		**2**	TUBE	TUBE TUBO	ROHR TUBO
8	3777744M1	∅ 8MM ◀▶ 1500MM		**2**	TUBE	TUBE TUBO	ROHR TUBO
9	3010473X1			**2**	O RING	JOINT TORIQUE ANELLO OR	O–RING JUNTA TORICA
10	3010471X1			**2**	O RING	JOINT TORIQUE ANELLO OR	O–RING JUNTA TORICA
11	3714143M1			**1**	HYDR HOSE	FLEXIBLE TUBOFLEX IDRAUL	HYDR SCHLAUCH TUBO HIDRAULICO
12	3714246M1			**1**	HYDR HOSE	FLEXIBLE TUBOFLEX IDRAUL	HYDR SCHLAUCH TUBO HIDRAULICO
13	3010502X1			**1**	O RING	JOINT TORIQUE ANELLO OR	O–RING JUNTA TORICA
14	**368544X1**			**1**	UNION	RACCORD RACCORDO	VERSCHRAUBUNG RACOR
15	3600218M1	14		**1**	JOINT	JOINT PLAT GIUNTO	DICHTUNG JUNTA
16	3010474X1			**1**	O RING	JOINT TORIQUE ANELLO OR	O–RING JUNTA TORICA
17	**368523X1**			**1**	UNION	RACCORD RACCORDO	VERSCHRAUBUNG RACOR
18	3600219M1	17		**1**	JOINT	JOINT PLAT GIUNTO	DICHTUNG JUNTA
19	3713615M1			**1**	SUPPORT	SUPPORT SUPPORTO	LAGERUNG DISPOS.DE SOSTEN
20	339124X1	M8X16		**2**	SCREW METRIC	VIS METRIQUE VITE METRICA	SCHRAUBE METR TORNILLO METRICO
21	390972X1			**2**	WASHER METRIC	RONDELLE METR. RONDELLA METRICO	SCHEIBE METRISCH ARANDELA METRICO
22	1691973M1			**1**	NUT	ECROU DADO	MUTTER TUERCA
23	1691972M1			**1**	NUT	ECROU DADO	MUTTER TUERCA
24	3713462M1			**1**	HYDR HOSE	FLEXIBLE TUBOFLEX IDRAUL	HYDR SCHLAUCH TUBO HIDRAULICO
25	3714144M1			**1**	HYDR HOSE	FLEXIBLE TUBOFLEX IDRAUL	HYDR SCHLAUCH TUBO HIDRAULICO
26	3010683X1	∅ 16–16–16MM		**2**	TEEPIECE	TE RACCORDO A T	T–STUECK PIEZA EN T

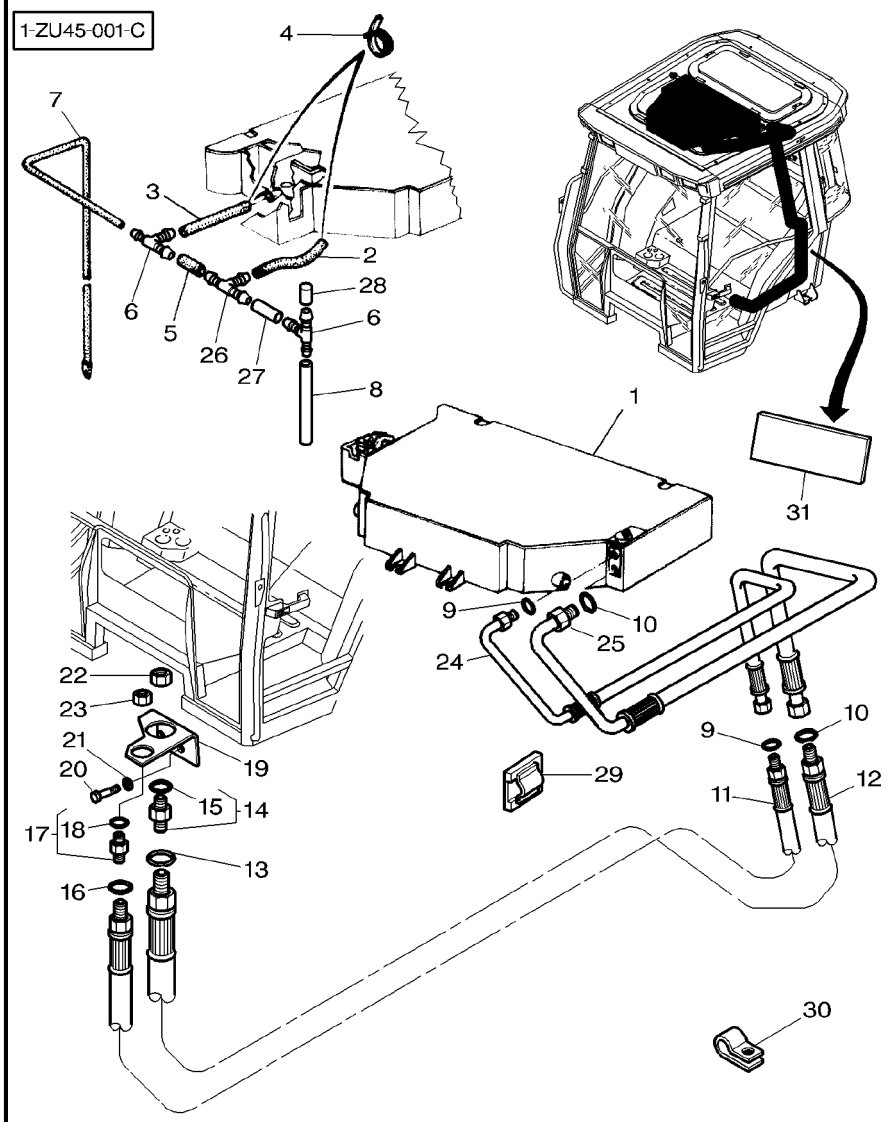

27	3777741M1	∅ 16MM ◀▶ 490MM	**2**	TUBE	TUBE TUBO	ROHR TUBO
28	3777737M1		**2**	PLUG	BOUCHON TAPPO	VERSCHL.STOPFEN TAPON
29	3582094M1		**1**	TIE	ATTACHE TRAVERSA ATTACCO	KUPPL.STANGE BARRA DE ENLACE
30	**3581507M1**		**1**	CLAMP	COLLIER FASCETTA	HALTESCHELLE ABRAZADERA
31	3784596M1	55x165x19 US ZA AA	**1**	GASKET	JOINT GUARNIZIONE	DICHTSCHEIBE EMPAQUETADURA.

Air Conditioner Air Conditionne Klimaanlage Aria Condizionata Aire Acondicionado	Hose Durite Schlauch Tubo Flexible	110-120	With High Visibility Roof Avec Toit Haute Visibilite Mit Dach Mit Sonnendach Con Tetto Alta Visibilita Con Tejado Alta Visibilidad

1-ZU45-002-B

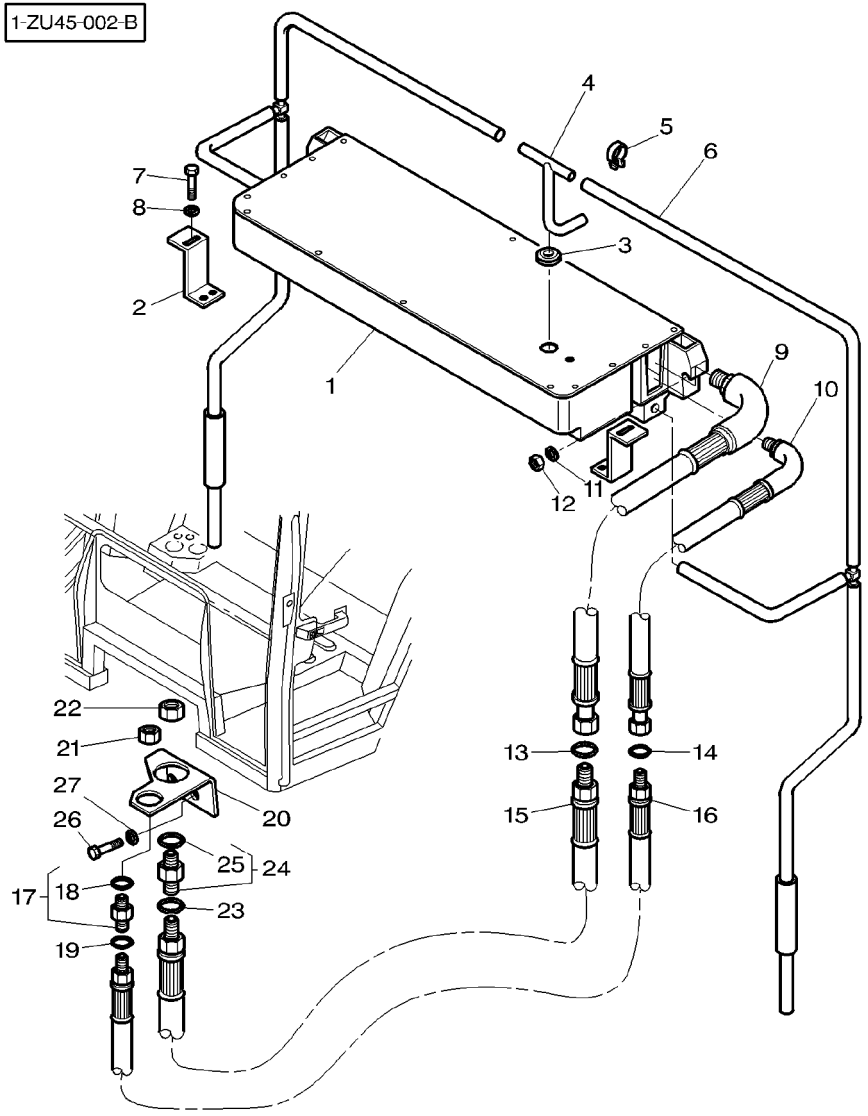

1	3778116M4	👁	110−160 No 1	1	AIR CONDITIONER	CONDITIONNEUR CONDIZIONATORE	KLIMAANLAGE ACONDIC.DE AIRE
2	3778321M1			2	STRAP	PATTE CORREGGIA	LASCHE FAJA
3	3714694M1			1	GROMMET	PASSE FIL GOMMINO	GUMMITUELLE PASACABLE
4	3779905M1			1	TEEPIECE	TE RACCORDO A T	T−STUECK PIEZA EN T
5	3779906M1			1	CLAMP	COLLIER FASCETTA	HALTESCHELLE ABRAZADERA
6	3779892M91	◀		1	TUBE	TUBE TUBO	ROHR TUBO
6	3779893M91	▶		1	TUBE	TUBE TUBO	ROHR TUBO
7	339124X1			2	SCREW METRIC	VIS METRIQUE VITE METRICA	SCHRAUBE METR TORNILLO METRICO
8	391039X1			2	WASHER METRIC	RONDELLE METR. RONDELLA METRICO	SCHEIBE METRISCH ARANDELA METRICO
9	3777707M1			1	HYDR HOSE	FLEXIBLE TUBOFLEX IDRAUL	HYDR SCHLAUCH TUBO HIDRAULICO
10	3777708M1			1	HYDR HOSE	FLEXIBLE TUBOFLEX IDRAUL	HYDR SCHLAUCH TUBO HIDRAULICO
11	391039X1			2	WASHER METRIC	RONDELLE METR. RONDELLA METRICO	SCHEIBE METRISCH ARANDELA METRICO
12	390345X1			2	NUT METRIC	ECROU METRIQUE DADO METRICO	MUTTER METRISCH TUERCA METRICO
13	3010471X1			1	O RING	JOINT TORIQUE ANELLO OR	O−RING JUNTA TORICA
14	3010473X1			1	O RING	JOINT TORIQUE ANELLO OR	O−RING JUNTA TORICA
15	3714246M1			1	HYDR HOSE	FLEXIBLE TUBOFLEX IDRAUL	HYDR SCHLAUCH TUBO HIDRAULICO
16	3714143M1			1	HYDR HOSE	FLEXIBLE TUBOFLEX IDRAUL	HYDR SCHLAUCH TUBO HIDRAULICO
17	**368523X1**			1	UNION	RACCORD RACCORDO	VERSCHRAUBUNG RACOR
18	3600219M1	17		1	JOINT	JOINT PLAT GIUNTO	DICHTUNG JUNTA
19	3010474X1			1	O RING	JOINT TORIQUE ANELLO OR	O−RING JUNTA TORICA
20	3713373M4			1	SUPPORT	SUPPORT SUPPORTO	LAGERUNG DISPOS.DE SOSTEN
21	1691972M1			1	NUT	ECROU DADO	MUTTER TUERCA
22	1691973M1			1	NUT	ECROU DADO	MUTTER TUERCA
23	3010502X1			1	O RING	JOINT TORIQUE ANELLO OR	O−RING JUNTA TORICA
24	**368544X1**			1	UNION	RACCORD RACCORDO	VERSCHRAUBUNG RACOR
25	3600218M1	24		1	JOINT	JOINT PLAT GIUNTO	DICHTUNG JUNTA

Air Conditioner Air Conditionne Klimaanlage Aria Condizionata Aire Acondicionado	Hose Durite Schlauch Tubo Flexible	110-120	With High Visibility Roof Avec Toit Haute Visibilite Mit Dach Mit Sonnendach Con Tetto Alta Visibilita Con Tejado Alta Visibilidad

1-ZU45-002-B

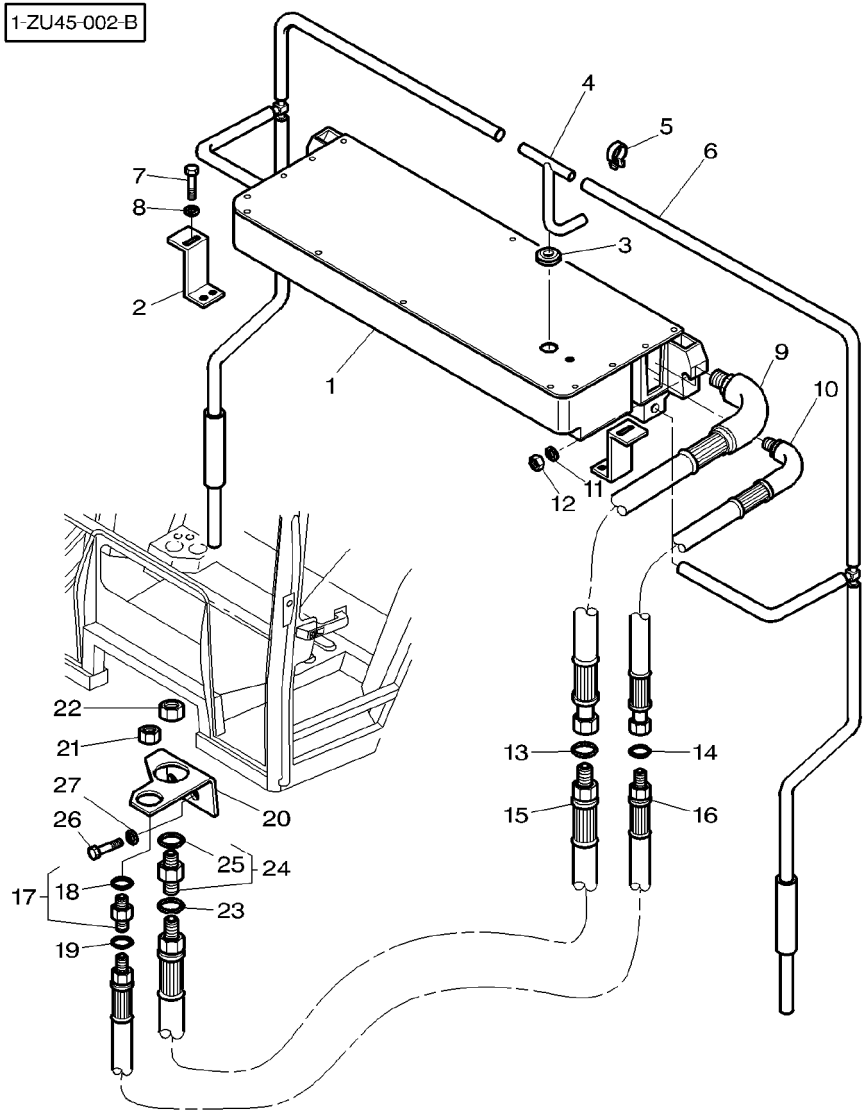

26	339124X1	M8X16	**2**	SCREW METRIC	VIS METRIQUE VITE METRICA	SCHRAUBE METR TORNILLO METRICO
27	339374X1		**2**	LOCK WASHER	RONDELLE FREIN ROSETTA ELASTICA	FEDERRING ARANDELA GROWER

1-ZU13-001-C

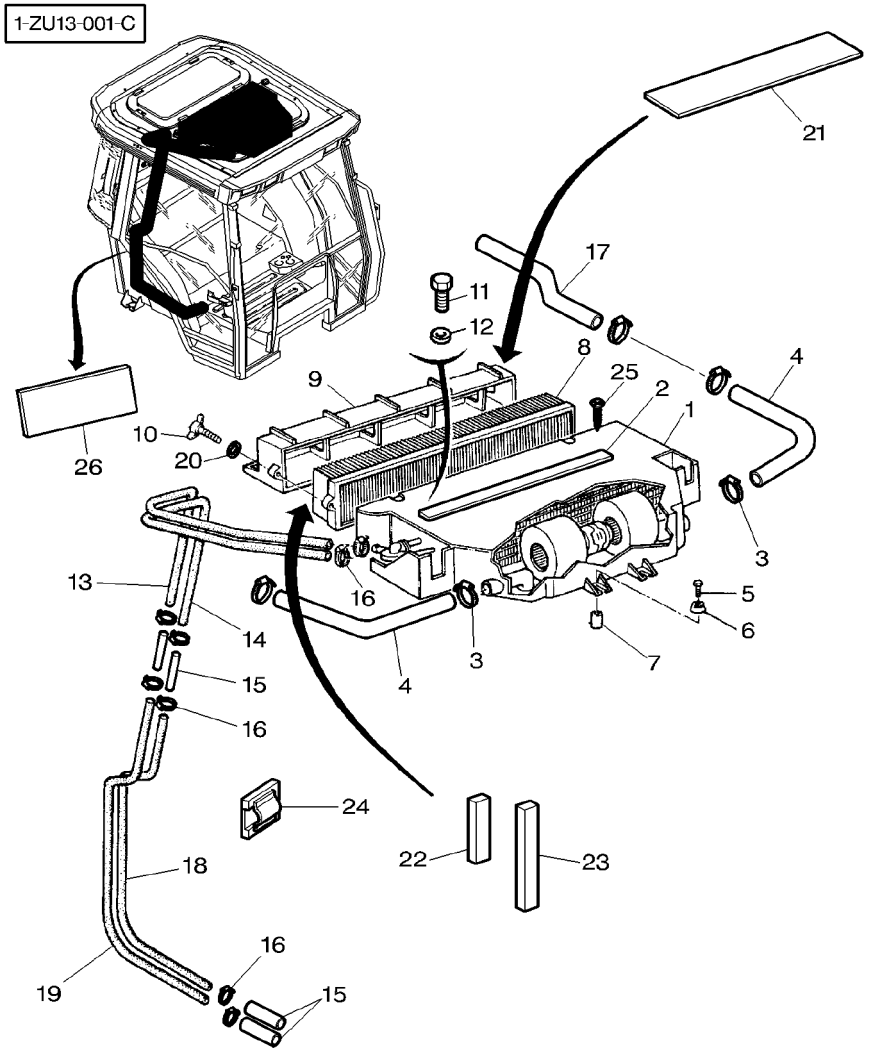

1	3713375M2	[A]	1	BOOT	COFFRE / PARAPOLVERE / SCHUTZKAPPE / PROTECCION
1	3713374M1	[B]	1	BOOT	COFFRE / PARAPOLVERE / SCHUTZKAPPE / PROTECCION
2	3713745M1	15X05X1950	1	GASKET	JOINT / GUARNIZIONE / DICHTSCHEIBE / EMPAQUETADURA.
3	338616X1	∅ 32X50	8	HOSE CLIP	COLLIER DURITE / STRINGITUBO / SCHLAUCHSCHELLE / CLIP P.FLEXIBLE
4	3387515M1		2	HOSE	DURITE / TUBO FLESSIBILE / SCHLAUCH / FLEXIBLE
5	339009X1	M8X35	4	BOLT METRIC	BOULON METRIQUE / BULLONE METRICO / MASCH.SCHRB MET / PERNO METRICO
6	3387512M1		8	BUFFER	BUTOIR RESPINGENTE / PARACHOQUES
7	3387513M1		4	SPACER	ENTRETOISE / DISTANZIALE / ABSTANDSTUECK / PIEZA DISTANCIA
8	***3388840M2***		1	CAB FILTER	FILTRE CABINE / FILTRO CABINA / KABINE FILTER / FILTRO CABINA
8	***3389746M1***	[C]	1	CAB FILTER	FILTRE CABINE / FILTRO CABINA / KABINE FILTER / FILTRO CABINA
9	3388743M1		1	FRAME ASSY	CADRE / TELAIO COMPLETO / RAHMEN KPL / CJTO.BASTIDOR
10	3388758M2	M6X60 ➡| 14/05/2000	2	WINGBOLT	VIS A AILETTES / BULLONE ALETTATO / FLUEGELSCHRAUBE / PERNO DE ALETAS
10	3783455M1	M6X60 |➡ 15/05/2000	2	SCREW	VIS / VITE / SCHRAUBE / TORNILLO
11	339160X1	M5X10	1	SCREW	VIS / VITE / SCHRAUBE / TORNILLO
12	390469X1		1	WASHER METRIC	RONDELLE METR. / RONDELLA METRICO / SCHEIBE METRISCH / ARANDELA METRICO
13	3714872M1	◀▶ 1000MM	1	HOSE	DURITE / TUBO FLESSIBILE / SCHLAUCH / FLEXIBLE
14	3714871M1	◀▶ 900MM	1	HOSE	DURITE / TUBO FLESSIBILE / SCHLAUCH / FLEXIBLE
15	3713469M1		4	TUBE	TUBE / TUBO / ROHR / TUBO
16	3019564X1	∅ 16-27	8	HOSE CLIP	COLLIER DURITE / STRINGITUBO / SCHLAUCHSCHELLE / CLIP P.FLEXIBLE
17	3713461M1		2	HOSE	DURITE / TUBO FLESSIBILE / SCHLAUCH / FLEXIBLE
18	3779739M1	◀▶ 1670MM	1	HOSE	DURITE / TUBO FLESSIBILE / SCHLAUCH / FLEXIBLE
19	3714873M1	◀▶ 2350MM	1	HOSE	DURITE / TUBO FLESSIBILE / SCHLAUCH / FLEXIBLE
20	391038X1	➡| 14/05/2000	2	WASHER METRIC	RONDELLE METR. / RONDELLA METRICO / SCHEIBE METRISCH / ARANDELA METRICO
21	3778497M2	915X150X12MM	1	FOAM	MOUSSE / GOMMAPIUMA / SCHAUMSTOFF / ESPUMA
22	3778658M1	38X13X60MM	1	GASKET	JOINT / GUARNIZIONE / DICHTSCHEIBE / EMPAQUETADURA.
23	3778659M1	38X13X80MM	1	GASKET	JOINT / GUARNIZIONE / DICHTSCHEIBE / EMPAQUETADURA.

1-ZU13-001-C

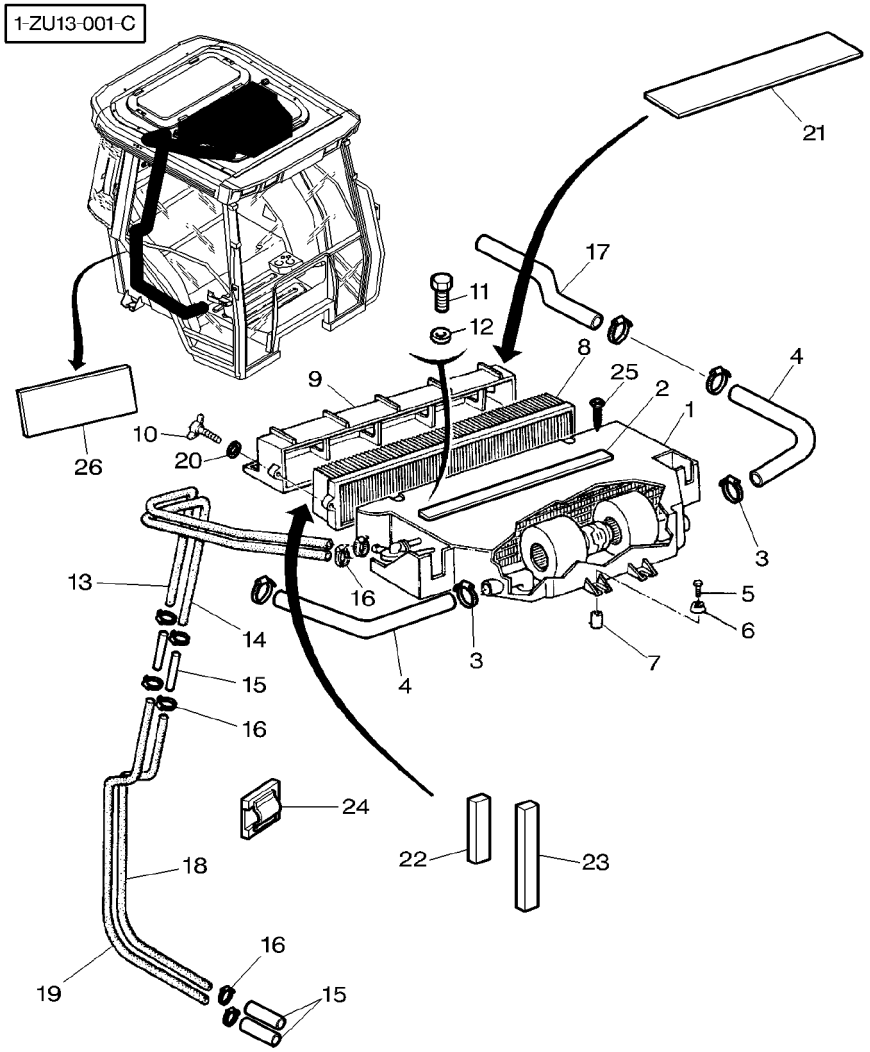

24	3582094M1		**1** TIE	ATTACHE TRAVERSA ATTACCO	KUPPL.STANGE BARRA DE ENLACE
25	380026X1	16X3,5	**9** SCREW	VIS VITE	SCHRAUBE TORNILLO
26	3784596M1	(US) (AA) (ZA) 165X55X19MM	**4** GASKET	JOINT GUARNIZIONE	DICHTSCHEIBE EMPAQUETADURA.

[A] WITH CONDITIONED AIR
AVEC AIR CONDITIONNE
MIT KLIMATISIERTE KABINE
CON ARIA CONDIZIONATA
CON AIRE ACONDICIONADO

[B] WITHOUT CONDITIONED AIR
SANS AIR CONDITIONNE
OHNE KLIMATISIERTE KABINE
SENZA ARIA CONDIZIONATA
SIN AIRE ACONDICIONADO

[C] CARBON FILTER
FILTRE A CHARBON
KOHLEFILTER
FILTRO CARBOME
FILTRO CARBON

Tractor Cab Cabine Tracteur Schlepperkabine Cabina Trattore Cabina Tractor	Heater Hoses Chauffage Durite Heizung Schlauch Riscaldatore Tubo Flessibile Calentador Flexible	**110-130**	With High Visibility Roof Avec Toit Haute Visibilite Mit Dach Mit Sonnendach Con Tetto Alta Visibilita Con Tejado Alta Visibilidad

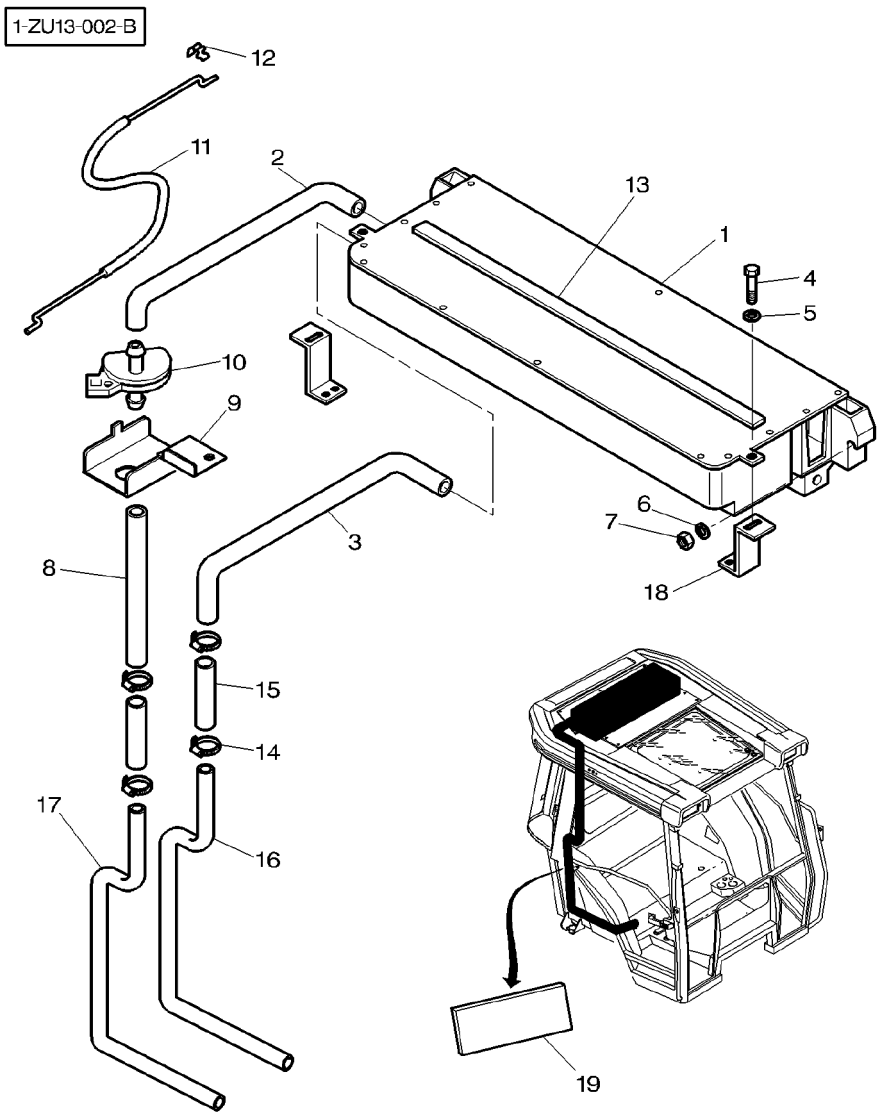

1	3778116M4	[A] 110−160 No 1	1	AIR CONDITIONER	CONDITIONNEUR CONDIZIONATORE	KLIMAANLAGE ACONDIC.DE AIRE
2	3777712M1		1	HOSE	DURITE TUBO FLESSIBILE	SCHLAUCH FLEXIBLE
3	3777711M1		1	HOSE	DURITE TUBO FLESSIBILE	SCHLAUCH FLEXIBLE
4	339124X1	M8X16	2	SCREW METRIC	VIS METRIQUE VITE METRICA	SCHRAUBE METR TORNILLO METRICO
5	391039X1		2	WASHER METRIC	RONDELLE METR. RONDELLA METRICO	SCHEIBE METRISCH ARANDELA METRICO
6	391039X1		2	WASHER METRIC	RONDELLE METR. RONDELLA METRICO	SCHEIBE METRISCH ARANDELA METRICO
7	390345X1		2	NUT METRIC	ECROU METRIQUE DADO METRICO	MUTTER METRISCH TUERCA METRICO
8	3778361M1	◀▶ 500MM	1	WATER HOSE	DURITE EAU TUBOFLEX ACQUA	WASSERSCHLAUCH MANGUERA P.AGUA
9	3778366M2		1	SUPPORT	SUPPORT SUPPORTO	LAGERUNG DISPOS.DE SOSTEN
10	1694047M1		1	COCK	ROBINET RUBINETTO	ABSPERRHAHN AGUJA INDICADORA
11	3902700M1		1	CABLE	CABLE CAVO	KABEL CABLE
12	1696477M1		1	CLIP	CLIP FERMAGLIO	SCHELLE CRAPA RETEN
13	3713745M1	15X05X1950	1	GASKET	JOINT GUARNIZIONE	DICHTSCHEIBE EMPAQUETADURA.
14	3000483X1		4	CLAMP	COLLIER FASCETTA	HALTESCHELLE ABRAZADERA
15	3713469M1		2	TUBE	TUBE TUBO	ROHR TUBO
16	3779739M1	◀▶ 1670MM	1	HOSE	DURITE TUBO FLESSIBILE	SCHLAUCH FLEXIBLE
17	3714873M1	◀▶ 2350MM	1	HOSE	DURITE TUBO FLESSIBILE	SCHLAUCH FLEXIBLE
18	3778321M1		2	STRAP	PATTE CORREGGIA	LASCHE FAJA
19	3784596M1	US AA ZA 165X55X19MM	4	GASKET	JOINT GUARNIZIONE	DICHTSCHEIBE EMPAQUETADURA.

[A] WITH CONDITIONED AIR
AVEC AIR CONDITIONNE
MIT KLIMATISIERTE KABINE
CON ARIA CONDIZIONATA
CON AIRE ACONDICIONADO

1-ZU12-002-A

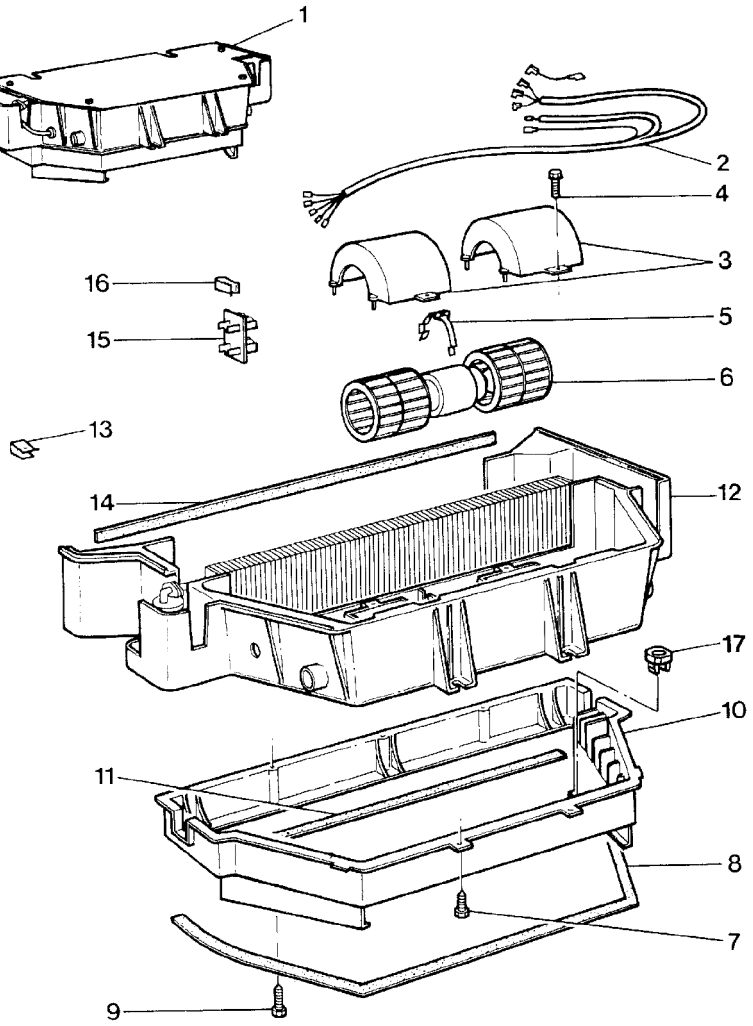

1	3713374M1		**1**	BOOT	COFFRE PARAPOLVERE	SCHUTZKAPPE PROTECCION
2	3310850M1	1	**1**	HARNESS	FAISCEAU FASCIOCAVI	KABELBAUM MAZO CABLES
3	3310833M1	1	**2**	COVER	COUVERCLE COPERCHIO	DECKEL CUBIERTA
4	3310837M1	1	**4**	SCREW	VIS VITE	SCHRAUBE TORNILLO
5	3902320M1	1	**1**	STRAP	PATTE CORREGGIA	LASCHE FAJA
6	**3310831M91**	1	**1**	MOTOR	MOTEUR. MOTORE.	MOTOR. MOTOR,
7	3310837M1	1	**6**	SCREW	VIS VITE	SCHRAUBE TORNILLO
8	3902322M1	1	**1**	FOAM	MOUSSE GOMMAPIUMA	SCHAUMSTOFF ESPUMA
9	3310841M1	1	**3**	SCREW	VIS VITE	SCHRAUBE TORNILLO
10	3310840M1	1	**1**	HOUSING	CARTER CARCASSA	GEHAEUSE ALOJAMIENTO
11	3310843M1	1	**1**	FOAM	MOUSSE GOMMAPIUMA	SCHAUMSTOFF ESPUMA
12	3310848M1	1	**1**	HOUSING	CARTER CARCASSA	GEHAEUSE ALOJAMIENTO
13	3310842M1	1	**9**	STRAP	PATTE CORREGGIA	LASCHE FAJA
14	3310849M1	1	**1**	FOAM	MOUSSE GOMMAPIUMA	SCHAUMSTOFF ESPUMA
15	3304510M92	1	**1**	RESISTOR	RESISTANCE RESISTORE	WIDERSTAND RESISTENCIA
16	3310834M1	1	**1**	STRAP	PATTE CORREGGIA	LASCHE FAJA
17	3583649M1		**1**	NUT SPECIAL	ECROU SPECIAL DADO SPECIALE	SPEZIALMUTTER TUERCA ESPECIAL

1-ZU12-003-A

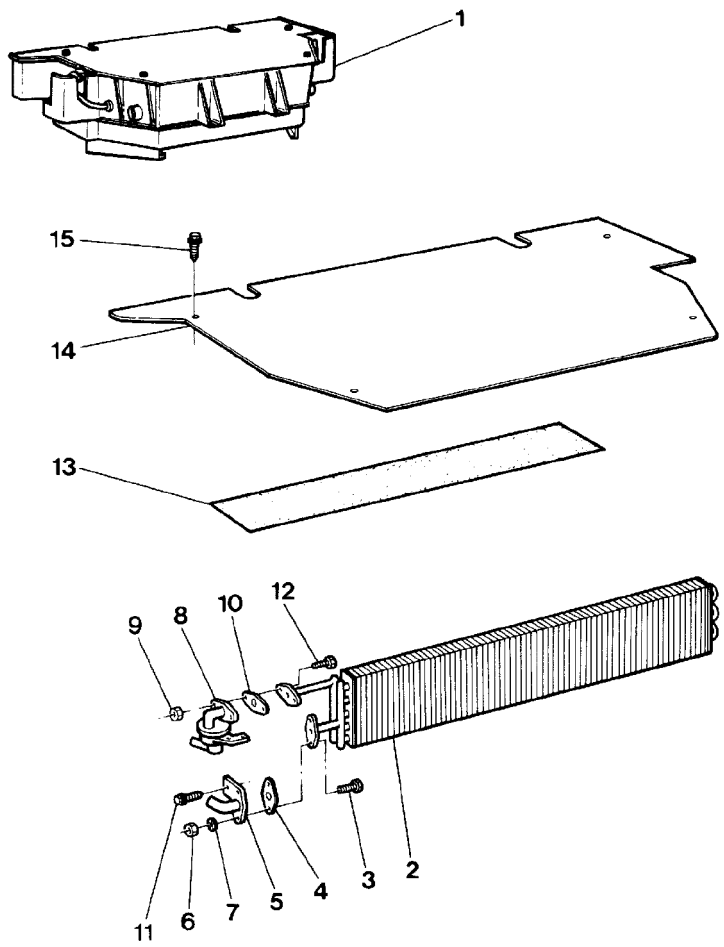

1	3713374M1		**1**	BOOT	COFFRE PARAPOLVERE	SCHUTZKAPPE PROTECCION
2	3310827M92	1	**1**	RADIATOR	RADIATEUR RADIATORE	KUEHLER RADIADOR
3	3902089M1	1	**2**	SCREW	VIS VITE	SCHRAUBE TORNILLO
4	3902327M1	1	**1**	GASKET	JOINT GUARNIZIONE	DICHTSCHEIBE EMPAQUETADURA.
5	3310946M1	1	**1**	ELBOW	COUDE GOMITO	WINKELSTUECK CODO
6	3902090M1	1	**2**	NUT	ECROU DADO	MUTTER TUERCA
7	3902090M1	1	**2**	NUT	ECROU DADO	MUTTER TUERCA
8	**3310945M1**	1	**1**	COCK	ROBINET RUBINETTO	ABSPERRHAHN AGUJA INDICADORA
9	3902090M1	1	**2**	NUT	ECROU DADO	MUTTER TUERCA
10	3902327M1	1	**1**	GASKET	JOINT GUARNIZIONE	DICHTSCHEIBE EMPAQUETADURA.
11	3902089M1	1	**1**	SCREW	VIS VITE	SCHRAUBE TORNILLO
12	3902089M1	1	**2**	SCREW	VIS VITE	SCHRAUBE TORNILLO
13	3902332M1	1	**1**	FOAM	MOUSSE GOMMAPIUMA	SCHAUMSTOFF ESPUMA
14	3310839M1	1	**1**	PLATE	PLAQUE PIASTRA	PLATTE PLATO
15	3310837M1	1	**5**	SCREW	VIS VITE	SCHRAUBE TORNILLO

Tractor Cab Cabine Tracteur Schlepperkabine Cabina Trattore Cabina Tractor	Heater Chauffage Heizung Riscaldatore Calentador	110-145	With High Visibility Roof Avec Toit Haute Visibilite Mit Dach Mit Sonnendach Con Tetto Alta Visibilita Con Tejado Alta Visibilidad

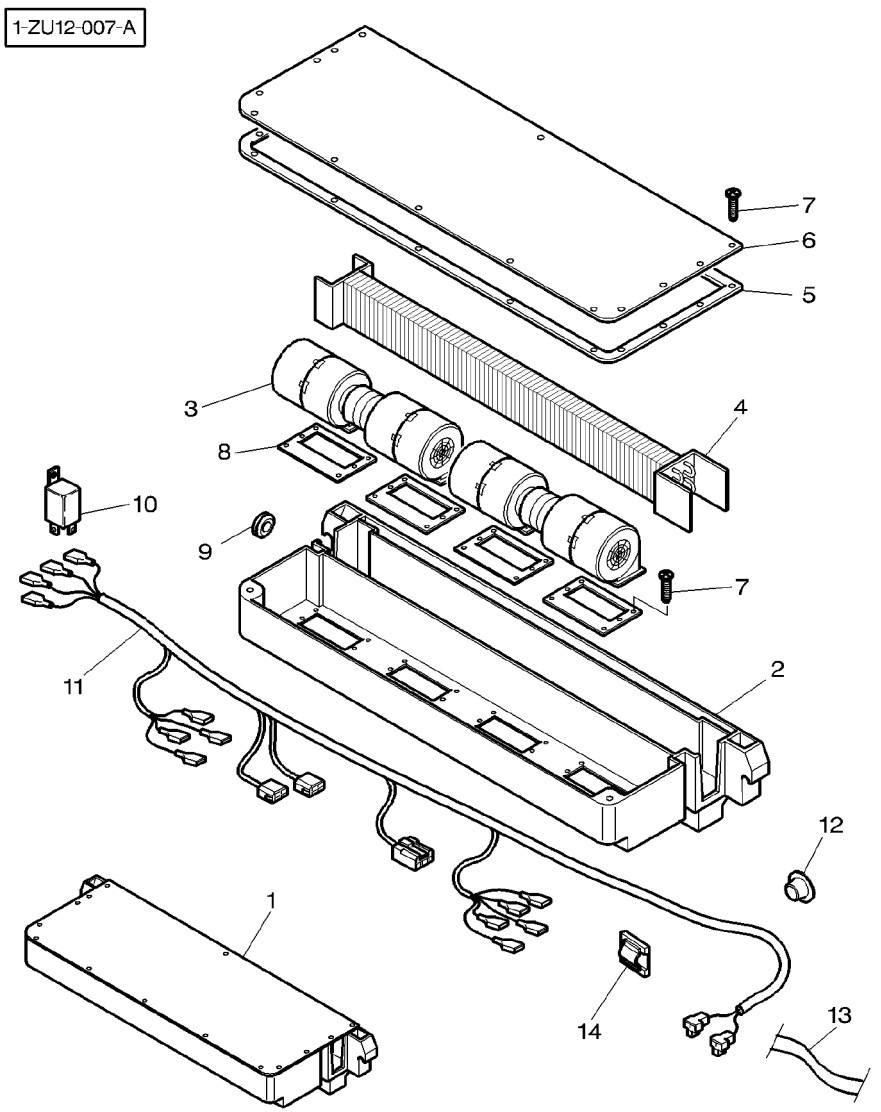

1	3778115M2		**1**	HEATER	CHAUFFAGE RISCALDATORE	HEIZUNG CALENTADOR
2	3901499M1	1	**1**	HOUSING	CARTER CARCASSA	GEHAEUSE ALOJAMIENTO
3	3901501M91	1	**2**	BLOWER	SOUFFLERIE SOFFIANTE	GEBLAESE SOPLADOR
4	3901502M1	1	**1**	RADIATOR	RADIATEUR RADIATORE	KUEHLER RADIADOR
5	3901506M1	1	**1**	SEAL	JOINT ETANCHEITE PARAOLIO	DICHTRING RETEN
6	3901500M1	1	**1**	PLATE	PLAQUE PIASTRA	PLATTE PLATO
7	3902719M1	1	**26**	SCREW	VIS VITE	SCHRAUBE TORNILLO
8	3901505M1	1	**4**	SEAL	JOINT ETANCHEITE PARAOLIO	DICHTRING RETEN
9	3901503M1	1	**1**	GROMMET	PASSE FIL GOMMINO	GUMMITUELLE PASACABLE
10	3611893M1	1	**1**	RELAY	RELAIS RELE	RELAIS RELE
11	3902720M91	1	**1**	HARNESS	FAISCEAU FASCIOCAVI	KABELBAUM MAZO CABLES
12	3901512M1	1	**2**	CAP	CHAPEAU CAPPELLO	KAPPE TAPA
13	3901504M1	1 ◀▶ 0.10M	**1**	TAPE	BANDE MAGNETIQUE NASTRO MAGNETICO	BANDSTREIFEN CINTA
14	3582094M1		**4**	TIE	ATTACHE TRAVERSA ATTACCO	KUPPL.STANGE BARRA DE ENLACE

1-ZU44-001-A

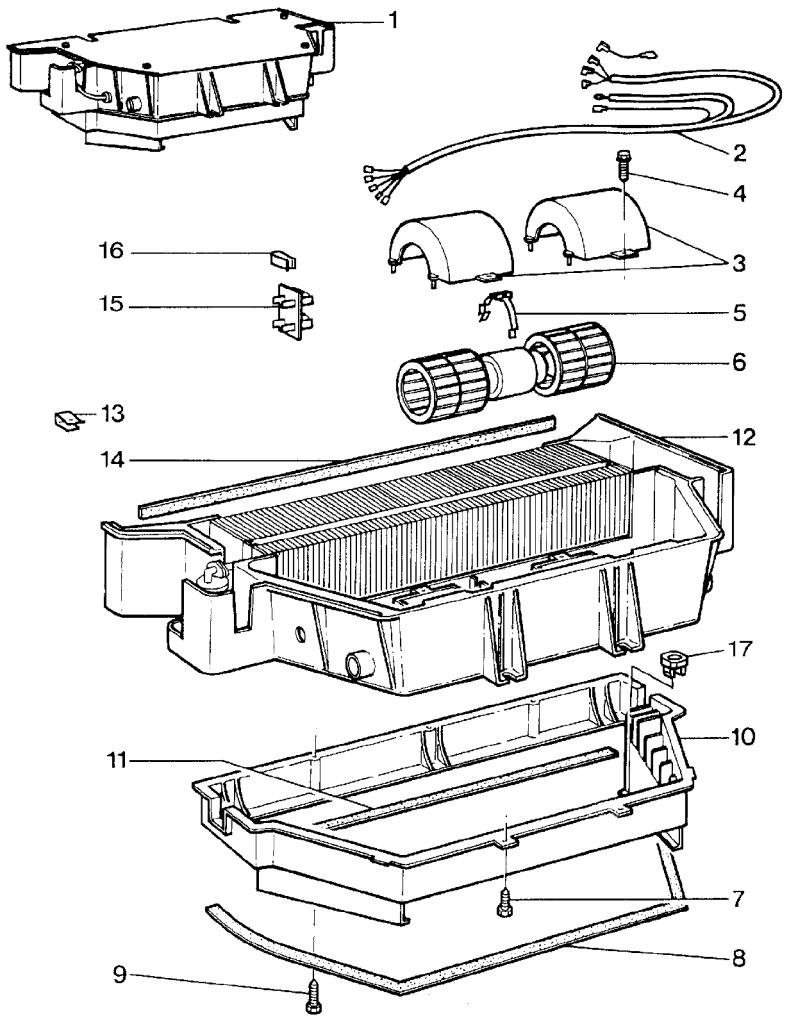

1	3713375M2		**1**	BOOT	COFFRE PARAPOLVERE	SCHUTZKAPPE PROTECCION
2	3902318M91	1	**1**	HARNESS	FAISCEAU FASCIOCAVI	KABELBAUM MAZO CABLES
3	3310833M1	1	**2**	COVER	COUVERCLE COPERCHIO	DECKEL CUBIERTA
4	3310837M1	1	**4**	SCREW	VIS VITE	SCHRAUBE TORNILLO
5	3902320M1	1	**1**	STRAP	PATTE CORREGGIA	LASCHE FAJA
6	**3310831M91**	1	**1**	MOTOR	MOTEUR. MOTORE.	MOTOR. MOTOR,
7	3310837M1	1	**6**	SCREW	VIS VITE	SCHRAUBE TORNILLO
8	3902322M1	1	**1**	FOAM	MOUSSE GOMMAPIUMA	SCHAUMSTOFF ESPUMA
9	3310841M1	1	**3**	SCREW	VIS VITE	SCHRAUBE TORNILLO
10	3310840M1	1	**1**	HOUSING	CARTER CARCASSA	GEHAEUSE ALOJAMIENTO
11	3310843M1	1	**1**	FOAM	MOUSSE GOMMAPIUMA	SCHAUMSTOFF ESPUMA
12	3310825M1	1	**1**	HOUSING	CARTER CARCASSA	GEHAEUSE ALOJAMIENTO
13	3310842M1	1	**9**	STRAP	PATTE CORREGGIA	LASCHE FAJA
14	3310849M1	1	**1**	FOAM	MOUSSE GOMMAPIUMA	SCHAUMSTOFF ESPUMA
15	3304510M92	1	**1**	RESISTOR	RESISTANCE RESISTORE	WIDERSTAND RESISTENCIA
16	3310834M1	1	**1**	STRAP	PATTE CORREGGIA	LASCHE FAJA
17	3583649M1	1	**1**	NUT SPECIAL	ECROU SPECIAL DADO SPECIALE	SPEZIALMUTTER TUERCA ESPECIAL

Air Conditioner
Air Conditionne
Klimaanlage
Aria Condizionata
Aire Acondicionado

110-155

1-ZU44-002-A

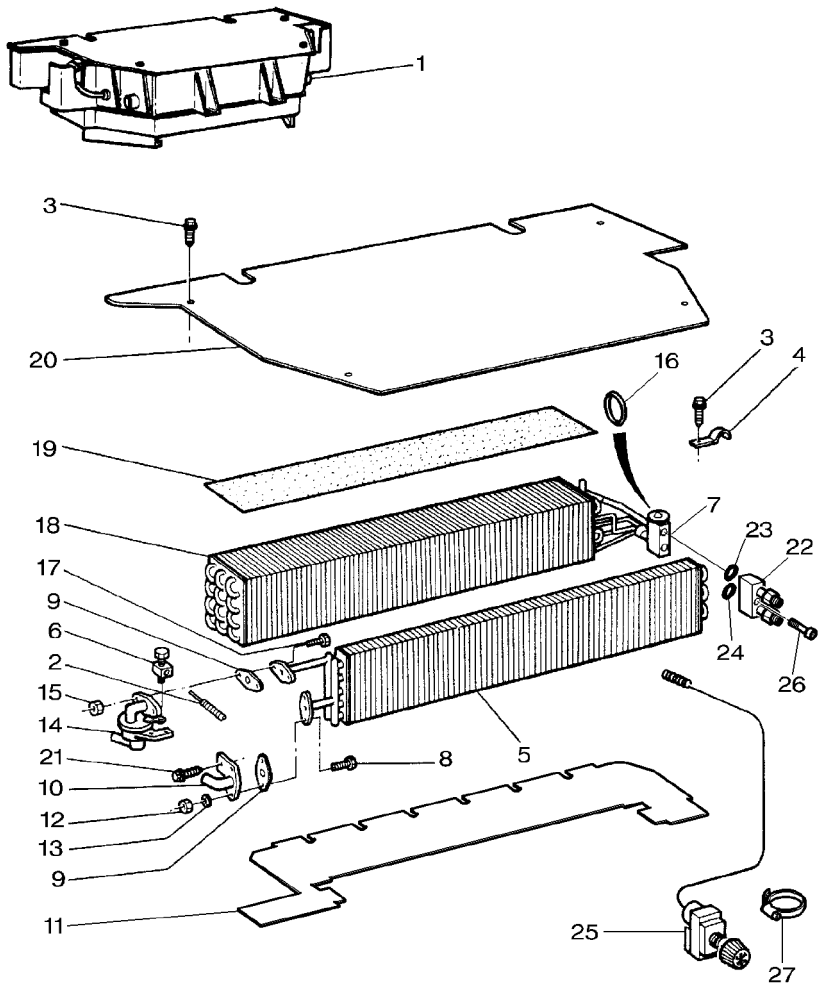

1	3713375M2		**1**	BOOT	COFFRE PARAPOLVERE	SCHUTZKAPPE PROTECCION
2	3902212M1		**1**	CABLE	CABLE CAVO	KABEL CABLE
3	3310837M1	1	**6**	SCREW	VIS VITE	SCHRAUBE TORNILLO
4	3310836M1	1	**1**	STRAP	PATTE CORREGGIA	LASCHE FAJA
5	3310827M92	1	**1**	RADIATOR	RADIATEUR RADIATORE	KUEHLER RADIADOR
6	3311579M91	1	**1**	UNION	RACCORD RACCORDO	VERSCHRAUBUNG RACOR
7	3902334M91	1	**1**	REGULATOR	REGULATEUR REGOLATORE	REGLER REGULADOR
8	3902089M1	1	**2**	SCREW	VIS VITE	SCHRAUBE TORNILLO
9	3902327M1	1	**2**	GASKET	JOINT GUARNIZIONE	DICHTSCHEIBE EMPAQUETADURA.
10	3310946M1	1	**1**	ELBOW	COUDE GOMITO	WINKELSTUECK CODO
11	3902329M2	1	**1**	PLATE	PLAQUE PIASTRA	PLATTE PLATO
12	3902090M1	1	**2**	NUT	ECROU DADO	MUTTER TUERCA
13	3902090M1	1	**2**	NUT	ECROU DADO	MUTTER TUERCA
14	**3310945M1**	1	**1**	COCK	ROBINET RUBINETTO	ABSPERRHAHN AGUJA INDICADORA
15	3902090M1	1	**2**	NUT	ECROU DADO	MUTTER TUERCA
16	3902499M1	1 ∅ 6,7MM	**1**	GASKET	JOINT GUARNIZIONE	DICHTSCHEIBE EMPAQUETADURA.
16	3902500M1	1 ∅ 13,4MM	**3**	GASKET	JOINT GUARNIZIONE	DICHTSCHEIBE EMPAQUETADURA.
17	3902089M1	1	**2**	SCREW	VIS VITE	SCHRAUBE TORNILLO
18	3902331M91	1	**1**	EVAPORATOR	EVAPORATEUR EVAPORATORE	VERDUNSTER EVAPORADOR
19	3902332M1	1	**1**	FOAM	MOUSSE GOMMAPIUMA	SCHAUMSTOFF ESPUMA
20	3310839M1	1	**1**	PLATE	PLAQUE PIASTRA	PLATTE PLATO
21	3902089M1	1	**2**	SCREW	VIS VITE	SCHRAUBE TORNILLO
22	3902549M91	1	**1**	CONNECTION	CONNEXION CONNESSIONE	VERBINDUNG CONEXION
23	3902550M1	1 ∅ 6,7X1,8MM	**1**	O RING	JOINT TORIQUE ANELLO OR	O-RING JUNTA TORICA
24	3902551M1	1 ∅ 13,4X2,4MM	**1**	O RING	JOINT TORIQUE ANELLO OR	O-RING JUNTA TORICA
25	**3310669M91**	1	**1**	THERMOSTAT	THERMOSTAT TERMOSTATO	THERMOSTAT TERMOSTATO

1-ZU44-002-A

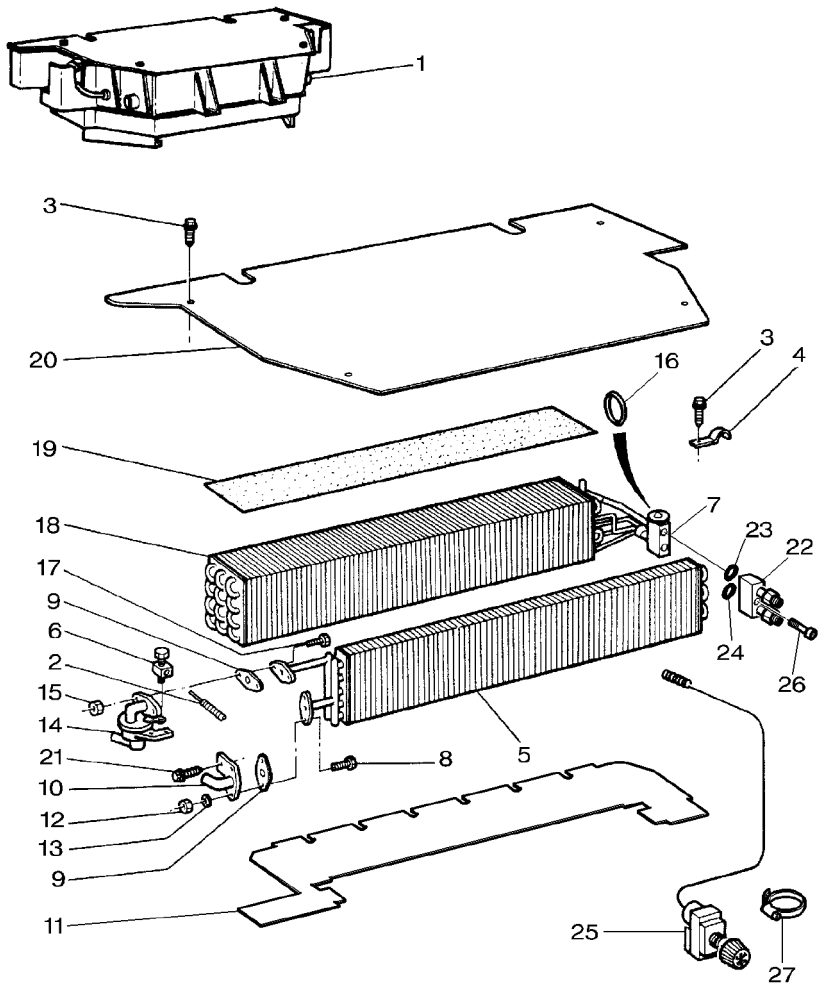

26	3015257X1	1	M6X55	**2**	SCREW METRIC	VIS METRIQUE VITE METRICA COLLIER FASCETTA	SCHRAUBE METR TORNILLO METRICO HALTESCHELLE ABRAZADERA
27	3000483X1			**2**	CLAMP		

Air Conditioner
Air Conditionne
Klimaanlage
Aria Condizionata
Aire Acondicionado

110-160

With High Visibility Roof
Avec Toit Haute Visibilite
Mit Dach Mit Sonnendach
Con Tetto Alta Visibilita
Con Tejado Alta Visibilidad

1-ZU44-003-A

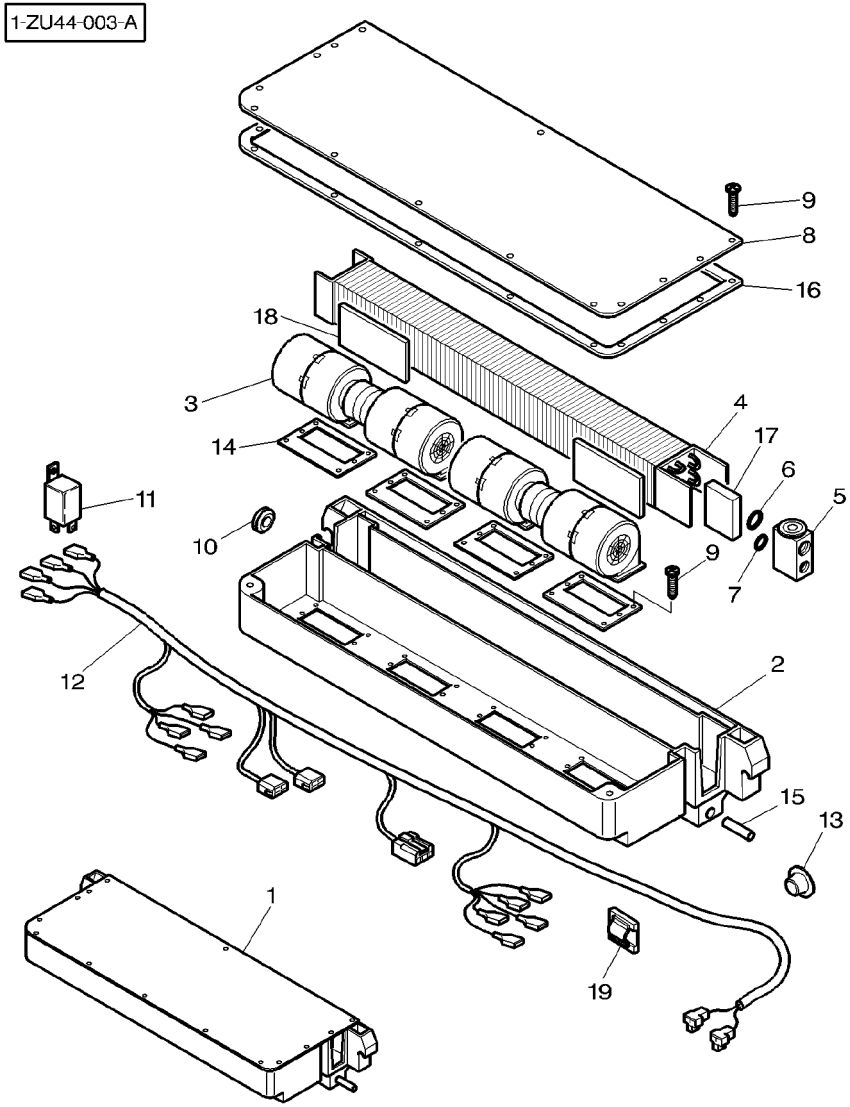

1	3778116M4		**1**	AIR CONDITIONER	CONDITIONNEUR CONDIZIONATORE	KLIMAANLAGE ACONDIC.DE AIRE
2	3901499M1	1	**1**	HOUSING	CARTER CARCASSA	GEHAEUSE ALOJAMIENTO
3	3901501M91	1	**2**	BLOWER	SOUFFLERIE SOFFIANTE	GEBLAESE SOPLADOR
4	3901516M1	1	**1**	EVAPORATOR	EVAPORATEUR EVAPORATORE	VERDUNSTER EVAPORADOR
5	3901517M1	1	**1**	PRESSURE VALVE	VALVE VALVOLA PRESSION	DRUCKVENTIL VALVULA PRESION
6	3901518M1	1	**1**	O RING	JOINT TORIQUE ANELLO OR	O-RING JUNTA TORICA
7	3901519M1	1	**1**	O RING	JOINT TORIQUE ANELLO OR	O-RING JUNTA TORICA
8	3901500M1	1	**1**	PLATE	PLAQUE PIASTRA	PLATTE PLATO
9	3902719M1	1	**26**	SCREW	VIS VITE	SCHRAUBE TORNILLO
10	3901503M1	1	**1**	GROMMET	PASSE FIL GOMMINO	GUMMITUELLE PASACABLE
11	3611893M1	1	**1**	RELAY	RELAIS RELE	RELAIS RELE
12	3902720M91	1	**1**	HARNESS	FAISCEAU FASCIOCAVI	KABELBAUM MAZO CABLES
13	3901512M1	1	**2**	CAP	CHAPEAU CAPPELLO	KAPPE TAPA
14	3901505M1	1	**4**	SEAL	JOINT ETANCHEITE PARAOLIO	DICHTRING RETEN
15	3901515M2	1	**2**	TUBE	TUBE TUBO	ROHR TUBO
16	3901513M1	1	**1**	SEAL	JOINT ETANCHEITE PARAOLIO	DICHTRING RETEN
17	3901822M1	1	**1**	SEAL	JOINT ETANCHEITE PARAOLIO	DICHTRING RETEN
18	3901823M1	1	**2**	PAD	TAMPON TAMPONE	KLOTZ ALMOHADILLA
19	3582094M1		**4**	TIE	ATTACHE TRAVERSA ATTACCO	KUPPL.STANGE BARRA DE ENLACE

Tractor Cab Cabine Tracteur Schlepperkabine Cabina Trattore Cabina Tractor	Heater Chauffage Heizung Riscaldatore Calentador	110-165

1-ZU12-001-C

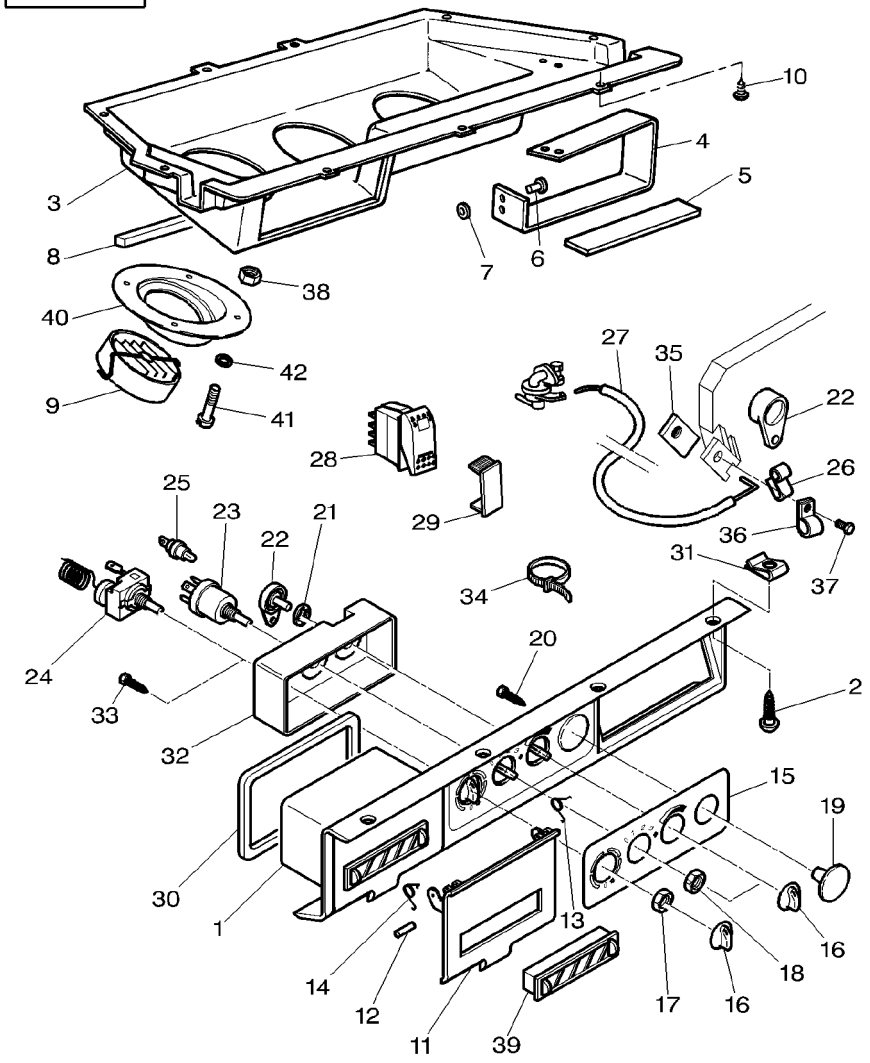

1	3712609M3	[A]	1	CONTROL PANEL	PANNEAU DE CDE PANNELLO STRUM.	BEDIENKONSOLE PANEL DE MANDO
1	3713532M3	[B]	1	CONTROL PANEL	PANNEAU DE CDE PANNELLO STRUM.	BEDIENKONSOLE PANEL DE MANDO
2	3389854M1	N 10X19	6	SELF TAP SCREWS	VIS AUTO TARAUD KITAUTOBLOCCANTE	SCHNEIDSCHRAUBEN TORN.AUTOROSC.
2	**3010506X1**	M5X16	8	SCREW	VIS VITE	SCHRAUBE TORNILLO
3	3714076M2		1	BOOT	COFFRE PARAPOLVERE	SCHUTZKAPPE PROTECCION
4	3714077M1		1	SUPPORT	SUPPORT SUPPORTO	LAGERUNG DISPOS.DE SOSTEN
5	3713635M1		1	GASKET	JOINT GUARNIZIONE	DICHTSCHEIBE EMPAQUETADURA.
6	3714846M1		4	RIVET	RIVET RIVETTO	NIET REMACHE
7	339102X1		4	WASHER METRIC	RONDELLE METR. RONDELLA METRICO	SCHEIBE METRISCH ARANDELA METRICO
8	3713744M1	10X15X1080MM	1	GASKET	JOINT GUARNIZIONE	DICHTSCHEIBE EMPAQUETADURA.
9	3388030M1		3	LOUVRE	TRAPPE AERATION FERITOIA	LUFTSCHLITZ LUMBRERA
10	380026X1	∅ 3.5X16	9	SCREW	VIS VITE	SCHRAUBE TORNILLO
11	3902214M1	1 [A] ➡ J032033	1	GATE	PORTE CANCELLO	TOR PORTILLO
11	3902214M1	1 [B] ➡ J040028	1	GATE	PORTE CANCELLO	TOR PORTILLO
11	3902214M2	1 [A] ➡ J032034	1	GATE	PORTE CANCELLO	TOR PORTILLO
11	3902214M2	1 [B] ➡ J040029	1	GATE	PORTE CANCELLO	TOR PORTILLO
12	3902204M1	1	2	CLEVIS PIN	AXE PERNO D'ATTACCO	SPLINTBOLZEN BULON CILINDRICO
13	3902203M1	1	1	SPRING	RESSORT MOLLA	FEDER MUELLE
14	3902202M1	1	1	SPRING	RESSORT MOLLA	FEDER MUELLE
15	3902215M1	1 [B]	1	DIFFUSING LENS	LENTILLE DIFFUS LENTE DIFFONDENT	STREUSCHEIBE LENTE DIFUSOR
15	3902299M1	1 [A]	1	DIFFUSING LENS	LENTILLE DIFFUS LENTE DIFFONDENT	STREUSCHEIBE LENTE DIFUSOR
16	3902213M1	1	3	KNOB	POMMEAU POMELLO	KNOPF POMO
17	3902217M1	1	1	NUT	ECROU DADO	MUTTER TUERCA
18	3902208M1	1	1	NUT	ECROU DADO	MUTTER TUERCA
19	3902205M1	1 [A]	1	PLUG	BOUCHON TAPPO	VERSCHL.STOPFEN TAPON
19	3902205M1	1 [B]	2	PLUG	BOUCHON TAPPO	VERSCHL.STOPFEN TAPON

1-ZU12-001-C

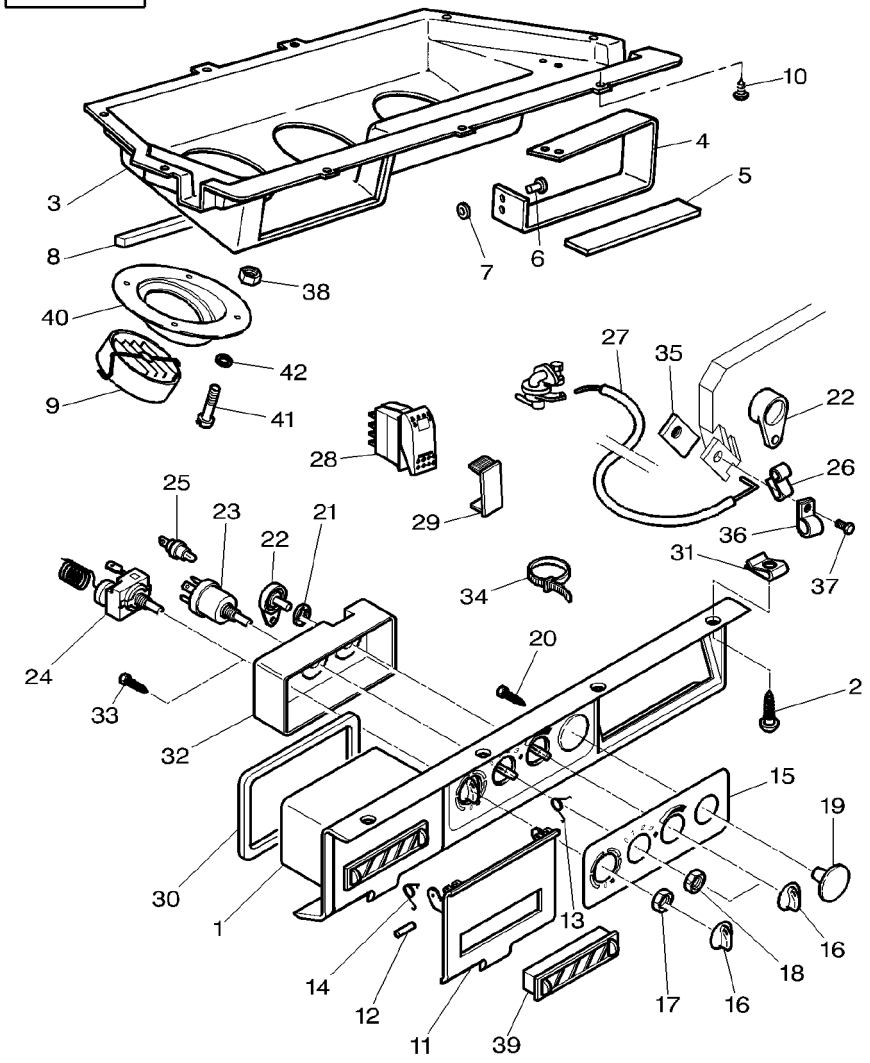

20	3902218M1	1 [A] M5X14	**1**	SCREW	VIS VITE	SCHRAUBE TORNILLO
20	3902218M1	1 [B] M5X14	**2**	SCREW	VIS VITE	SCHRAUBE TORNILLO
21	3902210M1	1	**1**	WASHER	RONDELLE RONDELLA	UNTERLEGSCHEIBE ARANDELA
22	3902211M1	1	**1**	LEVER	LEVIER LEVA	HEBEL PALANCA
23	3310871M1	1	**1**	COMMUTATOR	COMMUTATEUR COMMUTATORE	KOMMUTATOR CONMUTADOR
24	**3310669M91**	1	**1**	THERMOSTAT	THERMOSTAT TERMOSTATO	THERMOSTAT TERMOSTATO
25	1427873M1	1	**1**	HOLDER	PIECE SUPPORT SUPPORTO DI BASE	HALTER SUJETADOR
26	3902206M1	1	**1**	SPRING	RESSORT MOLLA	FEDER MUELLE
27	3902212M1	1	**1**	CABLE	CABLE CAVO	KABEL CABLE
28	***3713146M1***		**1**	SWITCH,INDIRECT	CONTACTEUR INTERRUTTORE IND	KONTAKTSCHALTER CONTACTOR
29	3713151M1		**1**	TAP	OBTURATEUR TAPPO*	HAHN GRIFO
30	3713746M1	15X10X480MM	**1**	GASKET	JOINT GUARNIZIONE	DICHTSCHEIBE EMPAQUETADURA.
31	3389351M1	No 10	**6**	NUT	ECROU DADO	MUTTER TUERCA
31	3389250M1	M5	**3**	NUT	ECROU DADO	MUTTER TUERCA
32	3902591M2	1	**1**	COVER	COUVERCLE COPERCHIO	DECKEL CUBIERTA
33	365916X1	1	**4**	SELF TAP SCREWS	VIS AUTO TARAUD KITAUTOBLOCCANTE	SCHNEIDSCHRAUBEN TORN.AUTOROSC.
34	3000483X1		**2**	CLAMP	COLLIER FASCETTA	HALTESCHELLE ABRAZADERA
35	3782904M1	➡| H125001	**1**	PLATE	PLAQUE PIASTRA	PLATTE PLATO
36	3782903M1	➡| H125001	**1**	CLIP	CLIP FERMAGLIO	SCHELLE CRAPA RETEN
37	3008179X1	M4X10 ➡| H125001	**1**	SCREW METRIC	VIS METRIQUE VITE METRICA	SCHRAUBE METR TORNILLO METRICO
38	3010477X1	(US) (AA) (ZA)	**8**	NUT METRIC	ECROU METRIQUE DADO METRICO	MUTTER METRISCH TUERCA METRICO
39	3783537M1	1 [A] ➡ J032034	**1**	DIFFUSER	DIFFUSEUR DIFFUSORE	DIFFUSOR DIFUSOR
39	3783537M1	1 [B] ➡ J040029	**1**	DIFFUSER	DIFFUSEUR DIFFUSORE	DIFFUSOR DIFUSOR
40	3784566M1	(US) (AA) (ZA)	**2**	SUPPORT	SUPPORT SUPPORTO	LAGERUNG DISPOS.DE SOSTEN

1-ZU12-001-C

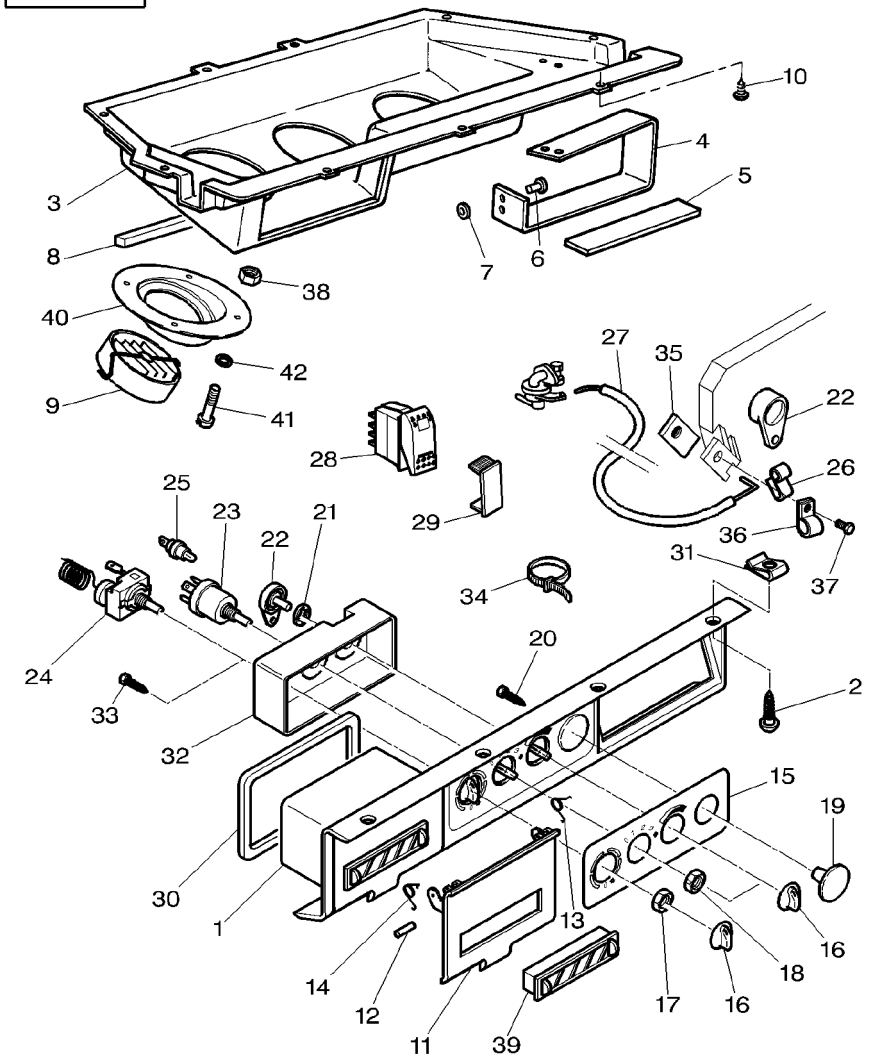

41	**3010506X1**	US AA ZA	**8** SCREW	VIS VITE	SCHRAUBE TORNILLO
		M5X16			
42	3019560X1	US AA ZA	**8** WASHER	RONDELLE RONDELLA	UNTERLEGSCHEIBE ARANDELA

[A] WITH CONDITIONED AIR
AVEC AIR CONDITIONNE
MIT KLIMATISIERTE KABINE
CON ARIA CONDIZIONATA
CON AIRE ACONDICIONADO

[B] WITHOUT CONDITIONED AIR
SANS AIR CONDITIONNE
OHNE KLIMATISIERTE KABINE
SENZA ARIA CONDIZIONATA
SIN AIRE ACONDICIONADO

Tractor Cab	Heater	110-170	With High Visibility Roof
Cabine Tracteur	Chauffage		Avec Toit Haute Visibilite
Schlepperkabine	Heizung		Mit Dach Mit Sonnendach
Cabina Trattore	Riscaldatore		Con Tetto Alta Visibilita
Cabina Tractor	Calentador		Con Tejado Alta Visibilidad

1-ZU12-006-C

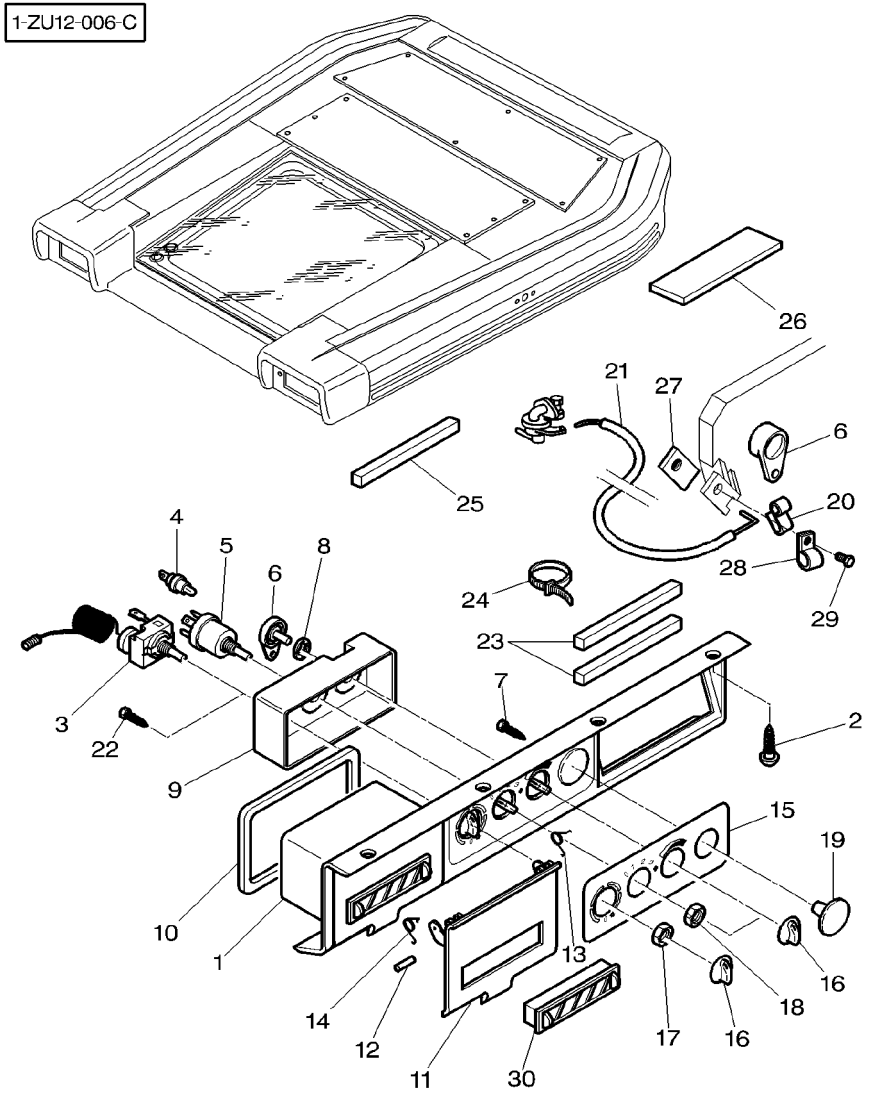

1	3778013M3	[A]	1	CONTROL PANEL	PANNEAU DE CDE	BEDIENKONSOLE
					PANNELLO STRUM.	PANEL DE MANDO
1	3778073M3	[B]	1	CONTROL PANEL	PANNEAU DE CDE	BEDIENKONSOLE
					PANNELLO STRUM.	PANEL DE MANDO
2	**3010506X1**	M5X16	8	SCREW	VIS	SCHRAUBE
					VITE	TORNILLO
2	365925X1	1 No 10X13		SELF TAP SCREWS	VIS AUTO TARAUD	SCHNEIDSCHRAUBEN
					KITAUTOBLOCCANTE	TORN.AUTOROSC.
3	3902701M91	1 [A]	1	THERMOSTAT	THERMOSTAT	THERMOSTAT
					TERMOSTATO	TERMOSTATO
4	1427873M1	1	2	HOLDER	PIECE SUPPORT	HALTER
					SUPPORTO DI BASE	SUJETADOR
5	3310871M1	1	1	COMMUTATOR	COMMUTATEUR	KOMMUTATOR
					COMMUTATORE	CONMUTADOR
6	3902211M1	1	1	LEVER	LEVIER	HEBEL
					LEVA	PALANCA
7	3902218M1	1 [A] M5X14	1	SCREW	VIS	SCHRAUBE
					VITE	TORNILLO
7	3902218M1	1 [B] M5X14	2	SCREW	VIS	SCHRAUBE
					VITE	TORNILLO
8	3902210M1	1	1	WASHER	RONDELLE	UNTERLEGSCHEIBE
					RONDELLA	ARANDELA
9	3902591M2	1	1	COVER	COUVERCLE	DECKEL
					COPERCHIO	CUBIERTA
10	3713746M1	15X10X480MM	1	GASKET	JOINT	DICHTSCHEIBE
					GUARNIZIONE	EMPAQUETADURA.
11	3902214M1	1 [A] ➡ J041011	1	GATE	PORTE	TOR
					CANCELLO	PORTILLO
11	3902214M1	1 [B] ➡ J081004	1	GATE	PORTE	TOR
					CANCELLO	PORTILLO
11	3902214M2	1 [A] ➡ J041012	1	GATE	PORTE	TOR
					CANCELLO	PORTILLO
11	3902214M2	1 [B] ➡ J081005	1	GATE	PORTE	TOR
					CANCELLO	PORTILLO
12	3902204M1	1	2	CLEVIS PIN	AXE	SPLINTBOLZEN
					PERNO D'ATTACCO	BULON CILINDRICO
13	3902203M1	1	1	SPRING	RESSORT	FEDER
					MOLLA	MUELLE
14	3902202M1	1	1	SPRING	RESSORT	FEDER
					MOLLA	MUELLE
15	3902299M1	1 [A]	1	DIFFUSING LENS	LENTILLE DIFFUS	STREUSCHEIBE
					LENTE DIFFONDENT	LENTE DIFUSOR
15	3902215M1	1 [B]	1	DIFFUSING LENS	LENTILLE DIFFUS	STREUSCHEIBE
					LENTE DIFFONDENT	LENTE DIFUSOR
16	3902213M1	1 [A]	3	KNOB	POMMEAU	KNOPF
					POMELLO	POMO
16	3902213M1	1 [B]	2	KNOB	POMMEAU	KNOPF
					POMELLO	POMO
17	3902217M1	1 [A]	1	NUT	ECROU	MUTTER
					DADO	TUERCA
18	3902208M1	1	1	NUT	ECROU	MUTTER
					DADO	TUERCA

Tractor Cab Cabine Tracteur Schlepperkabine Cabina Trattore Cabina Tractor	Heater Chauffage Heizung Riscaldatore Calentador	110-170	With High Visibility Roof Avec Toit Haute Visibilite Mit Dach Mit Sonnendach Con Tetto Alta Visibilita Con Tejado Alta Visibilidad

1-ZU12-006-C

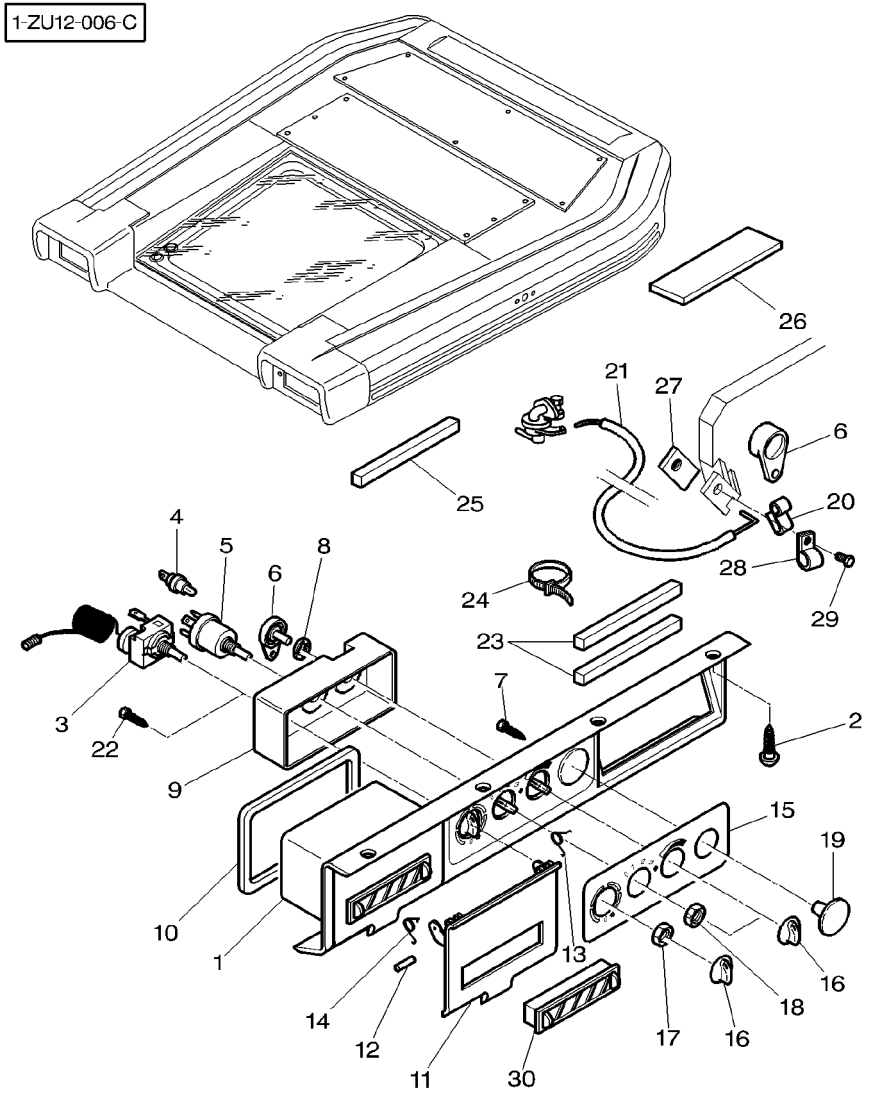

19	3902205M1	1 [A]	**1**	PLUG	BOUCHON TAPPO	VERSCHL.STOPFEN TAPON
19	3902205M1	1 [B]	**2**	PLUG	BOUCHON TAPPO	VERSCHL.STOPFEN TAPON
20	3902206M1	1	**1**	SPRING	RESSORT MOLLA	FEDER MUELLE
21	3902700M1	1	**1**	CABLE	CABLE CAVO	KABEL CABLE
22	365916X1	1	**4**	SELF TAP SCREWS	VIS AUTO TARAUD KITAUTOBLOCCANTE	SCHNEIDSCHRAUBEN TORN.AUTOROSC.
23	3778749M1	25X15X80MM	**1**	FOAM	MOUSSE GOMMAPIUMA	SCHAUMSTOFF ESPUMA
24	3000483X1		**2**	CLAMP	COLLIER FASCETTA	HALTESCHELLE ABRAZADERA
25	3713635M1	25X10X200	**1**	GASKET	JOINT GUARNIZIONE	DICHTSCHEIBE EMPAQUETADURA.
26	3713744M1	10X15X1080	**1**	GASKET	JOINT GUARNIZIONE	DICHTSCHEIBE EMPAQUETADURA.
27	3782904M1	➡| H141023	**1**	PLATE	PLAQUE PIASTRA	PLATTE PLATO
28	3782903M1	➡| H141023	**1**	CLIP	CLIP FERMAGLIO	SCHELLE CRAPA RETEN
29	3008179X1	➡| H141023 M4X10	**1**	SCREW METRIC	VIS METRIQUE VITE METRICA	SCHRAUBE METR TORNILLO METRICO
30	3783537M1	1 [A] ➡ J041012	**1**	DIFFUSER	DIFFUSEUR DIFFUSORE	DIFFUSOR DIFUSOR
30	3783537M1	1 [B] ➡ J081005	**1**	DIFFUSER	DIFFUSEUR DIFFUSORE	DIFFUSOR DIFUSOR

[A] WITH CONDITIONED AIR
AVEC AIR CONDITIONNE
MIT KLIMATISIERTE KABINE
CON ARIA CONDIZIONATA
CON AIRE ACONDICIONADO

[B] WITHOUT CONDITIONED AIR
SANS AIR CONDITIONNE
OHNE KLIMATISIERTE KABINE
SENZA ARIA CONDIZIONATA
SIN AIRE ACONDICIONADO

Tractor Cab **Cabine Tracteur** **Schlepperkabine** **Cabina Trattore** **Cabina Tractor**	**Heater** **Chauffage** **Heizung** **Riscaldatore** **Calentador**	**110-175**	**High Cold** **Grand Froid** **Grosskalte** **Grand Freddo** **Gran Freo**

1-ZU12-004-A

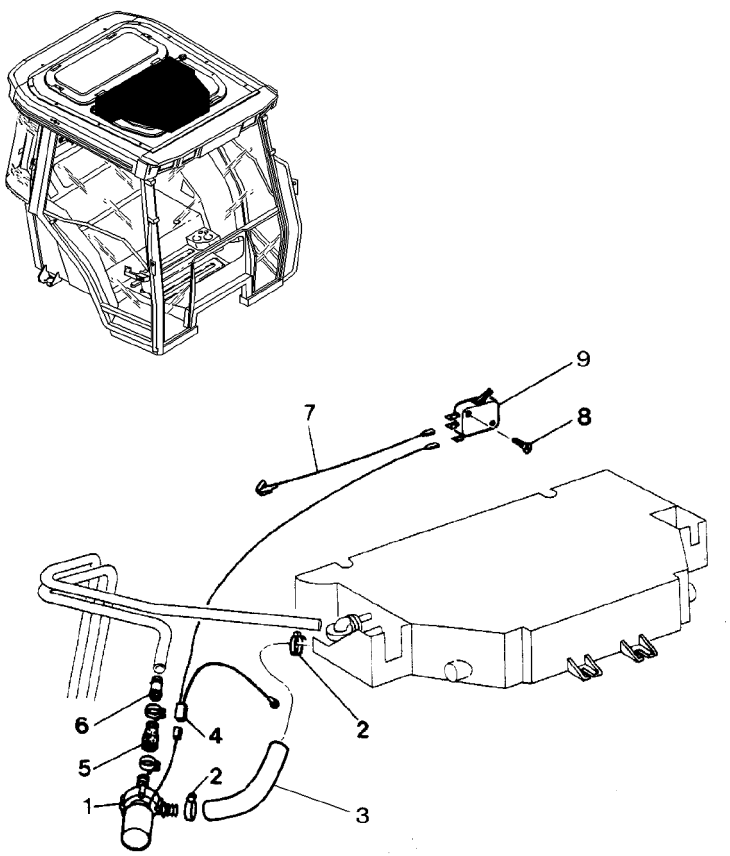

1	3712744M1		**1**	WATER PUMP	POMPE A EAU POMPA ACQUA	WASSERPUMPE BOMBA DE AGUA
2	3019564X1		**4**	HOSE CLIP	COLLIER DURITE STRINGITUBO	SCHLAUCHSCHELLE CLIP P.FLEXIBLE
3	3714538M1		**1**	HOSE	DURITE TUBO FLESSIBILE	SCHLAUCH FLEXIBLE
4	3778017M1	⇒ 3712734M1	**1**	HARNESS	FAISCEAU FASCIOCAVI	KABELBAUM MAZO CABLES
5	3616062M1		**1**	HOSE	DURITE TUBO FLESSIBILE	SCHLAUCH FLEXIBLE
6	3616064M1		**1**	TUBE	TUBE TUBO	ROHR TUBO
7	3583973M2		**1**	WIRE	FIL FILO DI FERRO	DRAHT HILO
8	3010065X1		**2**	SELF TAP SCREWS	VIS AUTO TARAUD KITAUTOBLOCCANTE	SCHNEIDSCHRAUBEN TORN.AUTOROSC.
9	***3616429M1***		**1**	SWITCH,INDIRECT	CONTACTEUR INTERRUTTORE IND	KONTAKTSCHALTER CONTACTOR

Tractor Cab	Heater
Cabine Tracteur	Chauffage
Schlepperkabine	Heizung
Cabina Trattore	Riscaldatore
Cabina Tractor	Calentador

110-180

High Cold − With High Visibility Roof
Grand Froid − Avec Toit Haute Visibilite
Grosskalte − Mit Dach Mit Sonnendach
Grand Freddo − Con Tetto Alta Visibilita
Gran Freo − Con Tejado Alta Visibilidad

1-ZU12-005-A

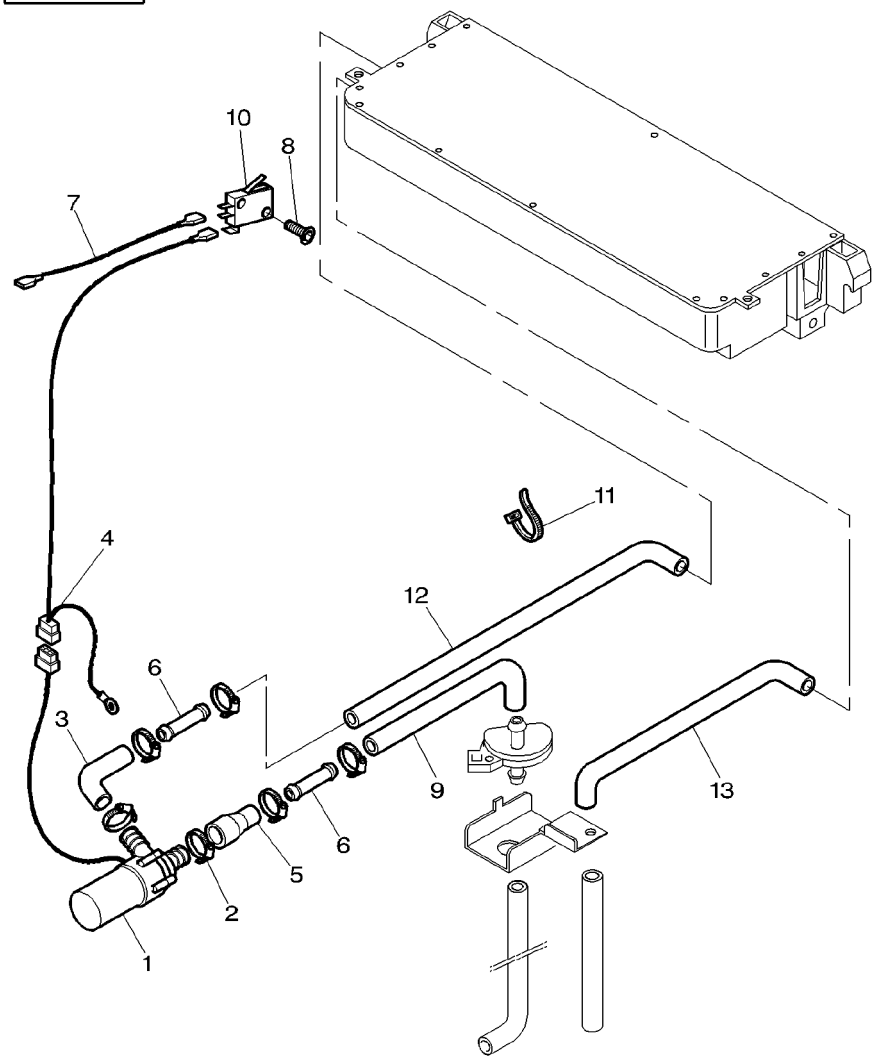

1	3712744M1		**1**	WATER PUMP	POMPE A EAU POMPA ACQUA	WASSERPUMPE BOMBA DE AGUA
2	3019564X1		**4**	HOSE CLIP	COLLIER DURITE STRINGITUBO	SCHLAUCHSCHELLE CLIP P.FLEXIBLE
3	3714538M1		**1**	HOSE	DURITE TUBO FLESSIBILE	SCHLAUCH FLEXIBLE
4	3778017M1		**1**	HARNESS	FAISCEAU FASCIOCAVI	KABELBAUM MAZO CABLES
5	3616062M1		**1**	HOSE	DURITE TUBO FLESSIBILE	SCHLAUCH FLEXIBLE
6	3616064M1		**2**	TUBE	TUBE TUBO	ROHR TUBO
7	3583973M2		**1**	WIRE	FIL FILO DI FERRO	DRAHT HILO
8	3010065X1		**2**	SELF TAP SCREWS	VIS AUTO TARAUD KITAUTOBLOCCANTE	SCHNEIDSCHRAUBEN TORN.AUTOROSC.
9	3778359M1	◀▶ 520MM	**1**	WATER HOSE	DURITE EAU TUBOFLEX ACQUA	WASSERSCHLAUCH MANGUERA P.AGUA
10	***3616429M1***		**1**	SWITCH,INDIRECT	CONTACTEUR INTERRUTTORE IND	KONTAKTSCHALTER CONTACTOR
11	3619622M1		**2**	CABLE TIE	ATTACHE CABLE FASCETTA CAVI	KABELBINDER ENLACE DE CABLE
12	3778335M1	◀▶ 910MM	**1**	WATER HOSE	DURITE EAU TUBOFLEX ACQUA	WASSERSCHLAUCH MANGUERA P.AGUA
13	3777711M1		**1**	HOSE	DURITE TUBO FLESSIBILE	SCHLAUCH FLEXIBLE

Windscreen Washer
Lave Glace
Scheibenwascher
Lavacristallo
Lavaparabrisas

110-185

1-ZU24-005-A

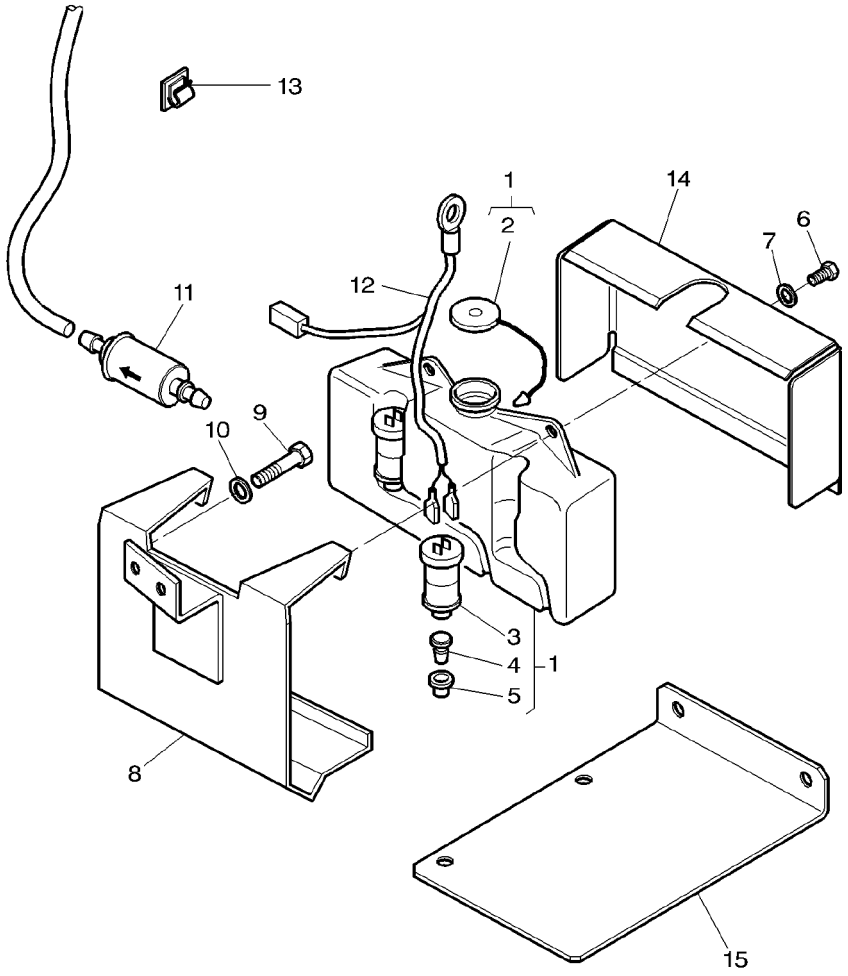

1	3582444M91		**1**	TANK	RESERVOIR SERBATOIO	TANK TANQUE
2	3106496M1	1	**1**	PLUG	BOUCHON TAPPO	VERSCHL.STOPFEN TAPON
3	3582441M1	1	**1**	WATER PUMP	POMPE A EAU POMPA ACQUA	WASSERPUMPE BOMBA DE AGUA
4	3582442M1	1	**1**	PLUG	BOUCHON TAPPO	VERSCHL.STOPFEN TAPON
5	3582443M1	1	**1**	GASKET	JOINT GUARNIZIONE	DICHTSCHEIBE EMPAQUETADURA.
6	339123X1		**2**	SCREW METRIC	VIS METRIQUE VITE METRICA	SCHRAUBE METR TORNILLO METRICO
7	391039X1		**2**	WASHER METRIC	RONDELLE METR. RONDELLA METRICO	SCHEIBE METRISCH ARANDELA METRICO
8	3714080M92		**1**	SUPPORT	SUPPORT SUPPORTO	LAGERUNG DISPOS.DE SOSTEN
9	339761X1	M8X25MM	**2**	SCREW METRIC	VIS METRIQUE VITE METRICA	SCHRAUBE METR TORNILLO METRICO
10	390972X1		**2**	WASHER METRIC	RONDELLE METR. RONDELLA METRICO	SCHEIBE METRISCH ARANDELA METRICO
11	3583086M1		**1**	PRESSURE VALVE	VALVE VALVOLA PRESSION	DRUCKVENTIL VALVULA PRESION
12	3618017M1		**1**	HARNESS	FAISCEAU FASCIOCAVI	KABELBAUM MAZO CABLES
13	1677803M1		**2**	CLIP	CLIP FERMAGLIO	SCHELLE CRAPA RETEN
14	3780314M91	➡	**1**	COWL	GARANT CAPPOTTATURA	AUFSATZ CAPERUZA
15	3782342M2		**1**	SUPPORT	SUPPORT SUPPORTO	LAGERUNG DISPOS.DE SOSTEN

Front Windscreen Wiper
Essuie Glace Avant
Scheibenwischer Vorderteil
Tergicristallo Anteriore
Varillaje De Limpiaparabrisas Delantero

110-190

1-ZU23-001-A

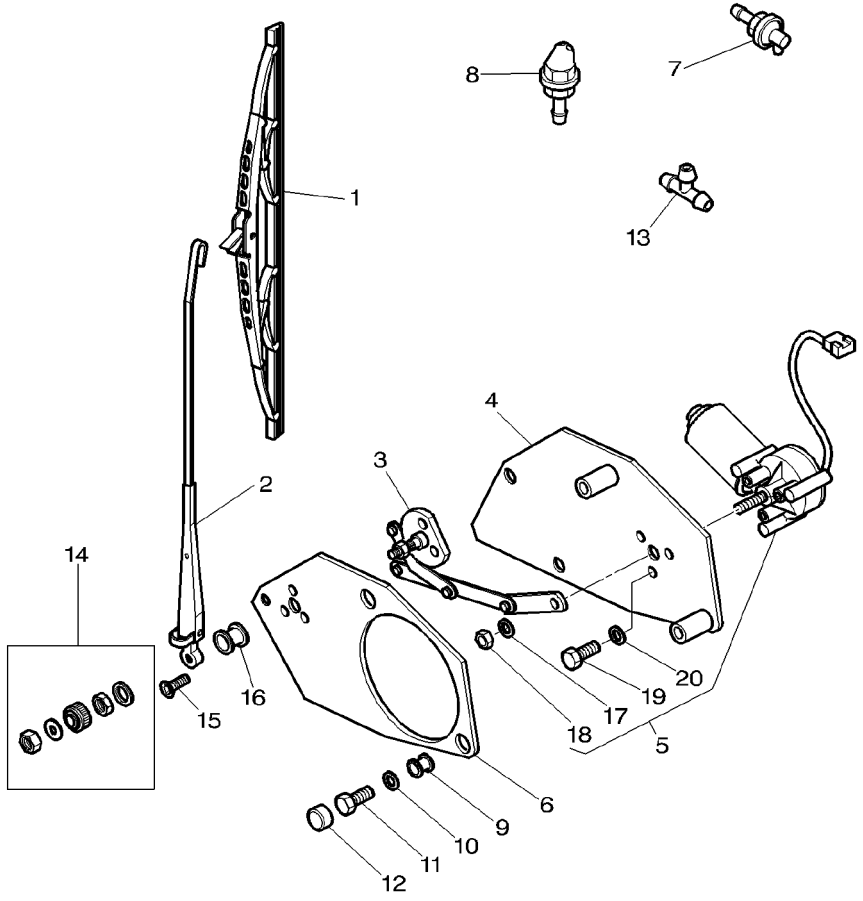

1	3777648M1		**1**	WIPER BLADE	BALAI ESSUIE GL SPAZZOLA TERGICR	WISCHERBLATT ESCOBILLA L P BR
2	3777649M1		**1**	ARM	BRAS BRACCIO	ARM BRAZO
3	3778259M1		**1**	TIE ROD	TRINGLERIE TIRANTE	ZUGSTANGE BRAZO DE ENLACE
4	3777699M2		**1**	SUPPORT	SUPPORT SUPPORTO	LAGERUNG DISPOS.DE SOSTEN
5	3777698M92		**1**	WIPER MOTOR	MOTEUR ESSUIE GL MOTORE TERGICRIS	WISCHERMOTOR MOTOR L PARABRIS
6	3777700M2		**1**	SUPPORT	SUPPORT SUPPORTO	LAGERUNG DISPOS.DE SOSTEN
7	3902342M1		**1**	UNION	RACCORD RACCORDO	VERSCHRAUBUNG RACOR
8	3389664M1		**2**	JET	GICLEUR GETTO	SPRITZDUESE SURTIDOR
9	3777608M1		**2**	GROMMET	PASSE FIL GOMMINO	GUMMITUELLE PASACABLE
10	391039X1		**2**	WASHER METRIC	RONDELLE METR. RONDELLA METRICO	SCHEIBE METRISCH ARANDELA METRICO
11	339123X1	M8X20MM	**2**	SCREW METRIC	VIS METRIQUE VITE METRICA	SCHRAUBE METR TORNILLO METRICO
12	3616277M1		**2**	HELMET	CAPUCHON CASCO	SCHUTZHELM CASCO
13	3583069M1		**2**	TEEPIECE	TE RACCORDO A T	T-STUECK PIEZA EN T
14	3778258M1		**1**	PARTS PACK	JEU PIECES PACCO RICAMBI	SATZ TEILE PAQUETE PIEZAS
15	3010762X1		**3**	SCREW	VIS VITE	SCHRAUBE TORNILLO
16	3777607M1		**1**	GROMMET	PASSE FIL GOMMINO	GUMMITUELLE PASACABLE
17	3008914X1	5	**1**	TAB WASHER	RONDELLE EVENT PIASTRINA SICUR	SICHERUNGSBLECH ARANDELA ALETA
18	339169X1	5 M8	**1**	NUT METRIC	ECROU METRIQUE DADO METRICO	MUTTER METRISCH TUERCA METRICO
19	339560X1	5 M6	**3**	SCREW METRIC	VIS METRIQUE VITE METRICA	SCHRAUBE METR TORNILLO METRICO
20	391289X1	5	**3**	LOCK WASHER	RONDELLE FREIN ROSETTA ELASTICA	FEDERRING ARANDELA GROWER

Rear Window Wiper
Essuie Glace Arriere
Hinterscheibenwischer
Tergicristallo Parte Posteriore
Limpiaparabrisas Parte Trasera

110-195

1-ZU25-001-A

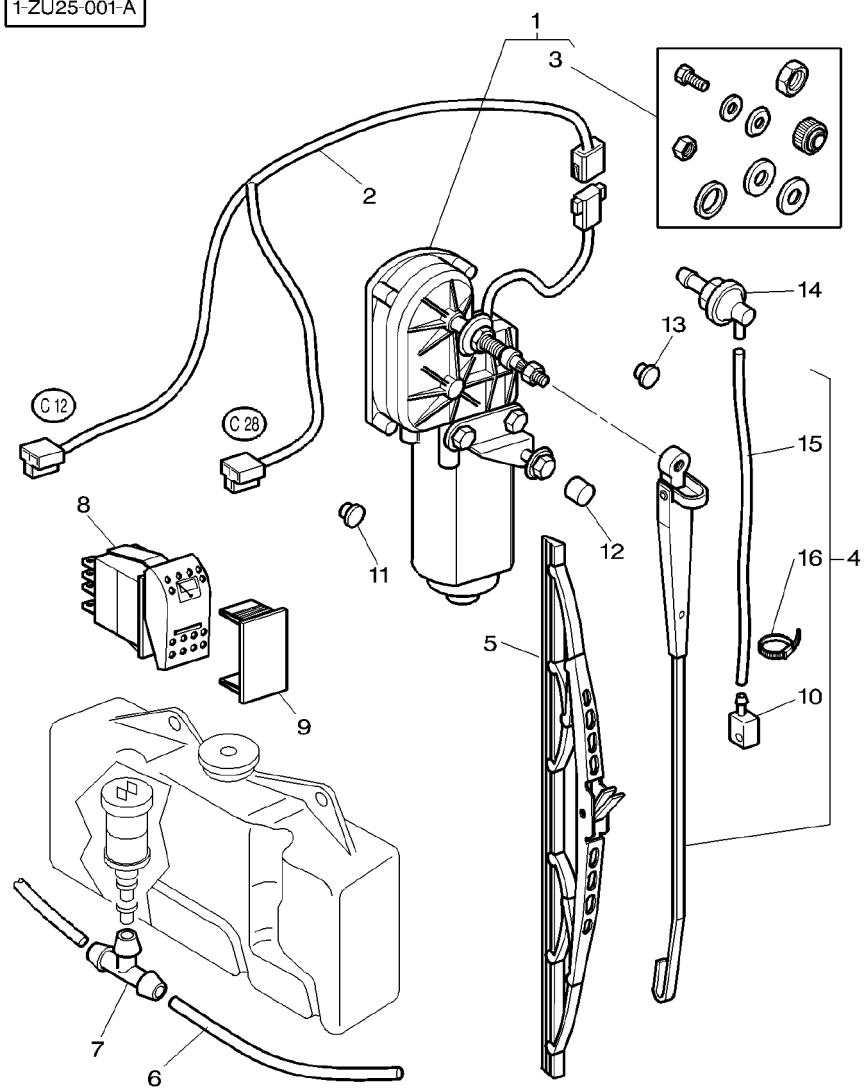

1	3715610M1			1	ENGINE	MOTEUR MOTORE	MOTOR MOTOR
2	3713738M2			1	HARNESS	FAISCEAU FASCIOCAVI	KABELBAUM MAZO CABLES
3	3902580M91	1		1	PARTS PACK	JEU PIECES PACCO RICAMBI	SATZ TEILE PAQUETE PIEZAS
4	3713196M2			1	ARM	BRAS BRACCIO	ARM BRAZO
5	***3713195M1***			1	WIPER BLADE	BALAI ESSUIE GL SPAZZOLA TERGICR	WISCHERBLATT ESCOBILLA L P BR
6	3781312M1	◀▶	250MM	1	HYDR HOSE	FLEXIBLE TUBOFLEX IDRAUL	HYDR SCHLAUCH TUBO HIDRAULICO
6	3714118M1	◀▶	200MM	1	TUBE	TUBE TUBO	ROHR TUBO
6	3714119M1	◀▶	1300MM	1	TUBE	TUBE TUBO	ROHR TUBO
6	3714120M2	◀▶	2800MM	1	TUBE	TUBE TUBO	ROHR TUBO
6	3580902M1	◀▶	1400MM	1	HOSE	DURITE TUBO FLESSIBILE	SCHLAUCH FLEXIBLE
7	3583069M1			1	TEEPIECE	TE RACCORDO A T	T-STUECK PIEZA EN T
8	***3713147M1***			1	SWITCH,INDIRECT	CONTACTEUR INTERRUTTORE IND	KONTAKTSCHALTER CONTACTOR
9	3713151M1	[A]		1	TAP	OBTURATEUR TAPPO*	HAHN GRIFO
10	3902461M1	4		1	JET	GICLEUR GETTO	SPRITZDUESE SURTIDOR
11	3713742M1	[A]	∅ 9,5MM	1	PLUG	BOUCHON TAPPO	VERSCHL.STOPFEN TAPON
12	3616277M1			X	HELMET	CAPUCHON CASCO	SCHUTZHELM CASCO
13	3713741M1	[A]	∅ 17,5MM	1	PLUG	BOUCHON TAPPO	VERSCHL.STOPFEN TAPON
14	3902342M1			1	UNION	RACCORD RACCORDO	VERSCHRAUBUNG RACOR
15	3902462M1	4		1	TUBE	TUBE TUBO	ROHR TUBO
16	3902463M1	4		1	CLAMP	COLLIER FASCETTA	HALTESCHELLE ABRAZADERA

[A] WITHOUT REAR WIPER AND WASHER WINDSCREEN
SANS ESSUIE GLACE ET LAVE GLACE ARRIERE
OHNE SCHEIBENWISCHER UND SCHEIBENWASCHANLAGE HINT
SENZA TERGICRISTALLO E LAVAGGIO CRISTALLO POSTERIO RE
SIN LIMPIA Y LAVA VENTANA TRASERA

1-ZU28-001-B

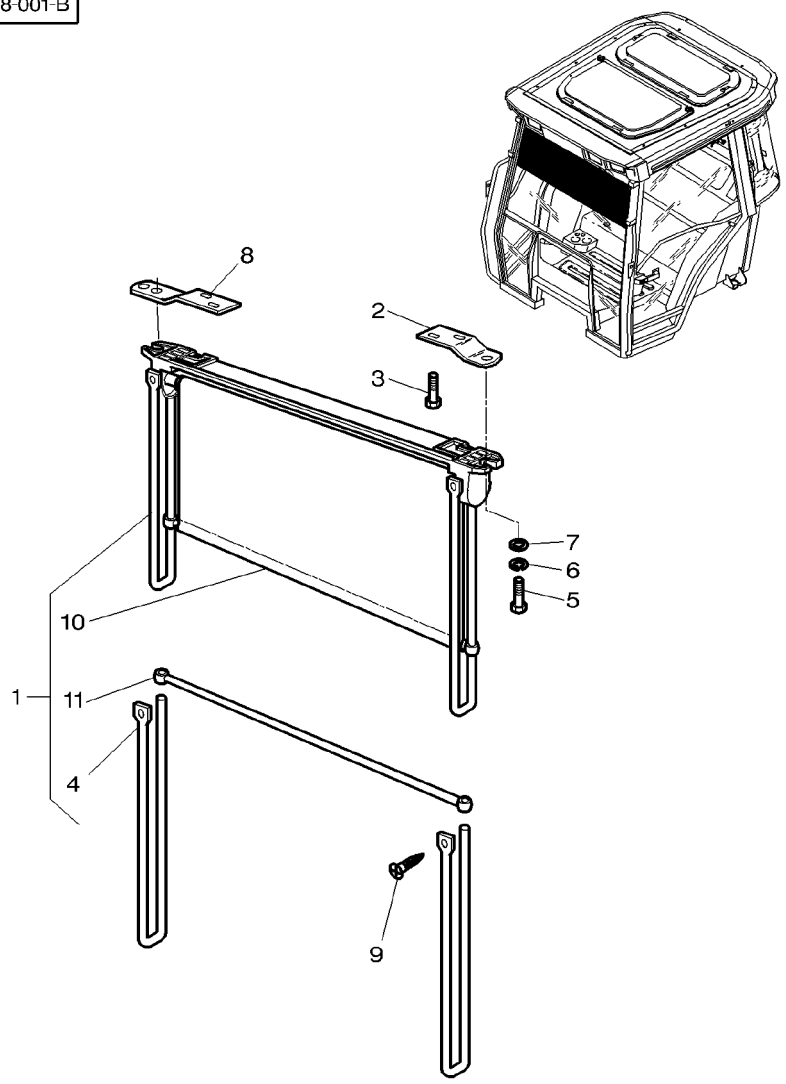

1	**3714072M91**		**1**	CANOPY	PARE SOLEIL TETTUCCIO	VORDACH DOSEL
2	3389750M1	◀	**1**	SUPPORT	SUPPORT SUPPORTO	LAGERUNG DISPOS.DE SOSTEN
3	3007934X1	M6X16	**4**	SCREW METRIC	VIS METRIQUE VITE METRICA	SCHRAUBE METR TORNILLO METRICO
4	3902174M91	1	**2**	ROD	TRINGLE ASTA	STANGE VARILLA
5	339560X1	M16X16	**2**	SCREW METRIC	VIS METRIQUE VITE METRICA	SCHRAUBE METR TORNILLO METRICO
6	339375X1		**2**	LOCK WASHER	RONDELLE FREIN ROSETTA ELASTICA	FEDERRING ARANDELA GROWER
7	390971X1		**2**	WASHER METRIC	RONDELLE METR. RONDELLA METRICO	SCHEIBE METRISCH ARANDELA METRICO
8	3389749M1	▶	**1**	SUPPORT	SUPPORT SUPPORTO	LAGERUNG DISPOS.DE SOSTEN
9	3389854M1	CBZ N10X19	**2**	SELF TAP SCREWS	VIS AUTO TARAUD KITAUTOBLOCCANTE	SCHNEIDSCHRAUBEN TORN.AUTOROSC.
10	3902176M91	1	**1**	PANEL	PANNEAU PANNELLO	VERKL.BLECH PANEL
11	3902175M91	1	**1**	BAR	BARRE BARRA	STAB BARRA

Tractor Cab Cabine Tracteur Schlepperkabine Cabina Trattore Cabina Tractor	Canopy Pare Soleil Vordach Tettuccio Dosel	110-205	With High Visibility Roof Avec Toit Haute Visibilite Mit Dach Mit Sonnendach Con Tetto Alta Visibilita Con Tejado Alta Visibilidad

1-ZU28-002-B

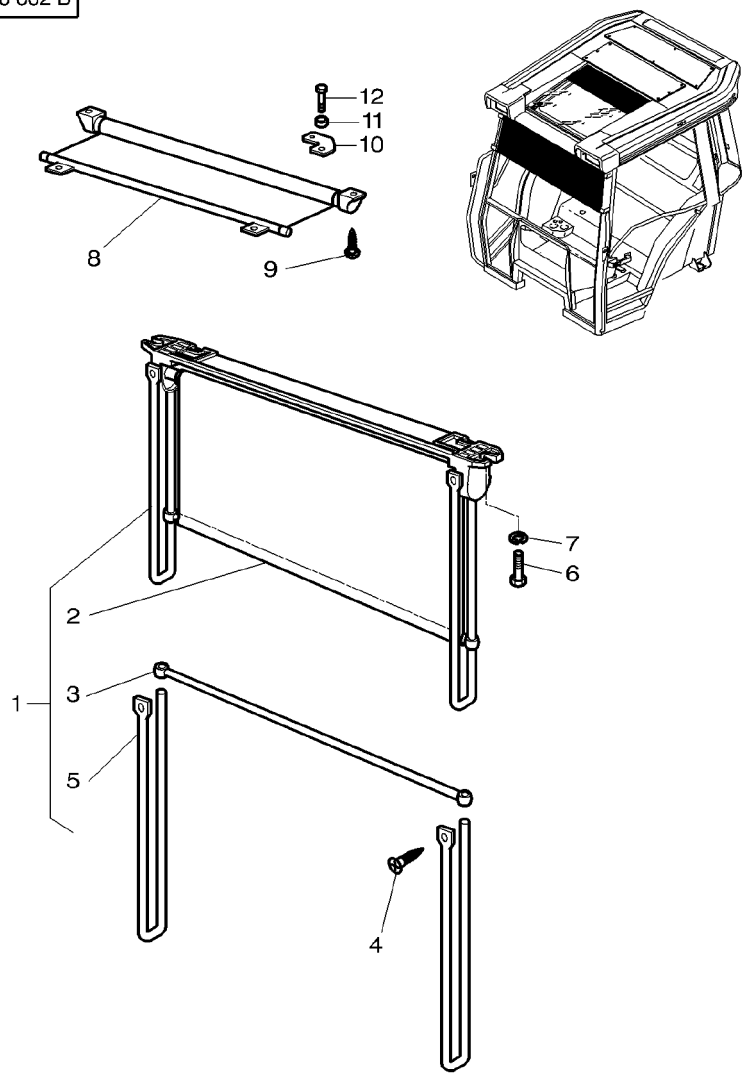

1	**3714072M91**		**1**	CANOPY	PARE SOLEIL TETTUCCIO	VORDACH DOSEL
2	3902176M91	1	**1**	PANEL	PANNEAU PANNELLO	VERKL.BLECH PANEL
3	3902175M91	1	**1**	BAR	BARRE BARRA	STAB BARRA
4	3389854M1	CBZ N10X19	**2**	SELF TAP SCREWS	VIS AUTO TARAUD KITAUTOBLOCCANTE	SCHNEIDSCHRAUBEN TORN.AUTOROSC.
5	3902174M91	1	**2**	ROD	TRINGLE ASTA	STANGE VARILLA
6	339666X1	M6X20	**2**	SCREW METRIC	VIS METRIQUE VITE METRICA	SCHRAUBE METR TORNILLO METRICO
7	339375X1		**2**	LOCK WASHER	RONDELLE FREIN ROSETTA ELASTICA	FEDERRING ARANDELA GROWER
8	3777706M1		**1**	CANOPY	PARE SOLEIL TETTUCCIO	VORDACH DOSEL
9	360367X1		**2**	SCREW	VIS VITE	SCHRAUBE TORNILLO
10	3778315M1		**1**	SUPPORT	SUPPORT SUPPORTO	LAGERUNG DISPOS.DE SOSTEN
11	3045014M2		**2**	SPACER	ENTRETOISE DISTANZIALE	ABSTANDSTUECK PIEZA DISTANCIA
12	391244X1	M6X45	**2**	BOLT METRIC	BOULON METRIQUE BULLONE METRICO	MASCH.SCHRB MET PERNO METRICO

Radio Installation
Montage Radio
Rundfunk Anbau
Radio Installazione
Radio Instalacion

110-210

1-ZU26-001-C

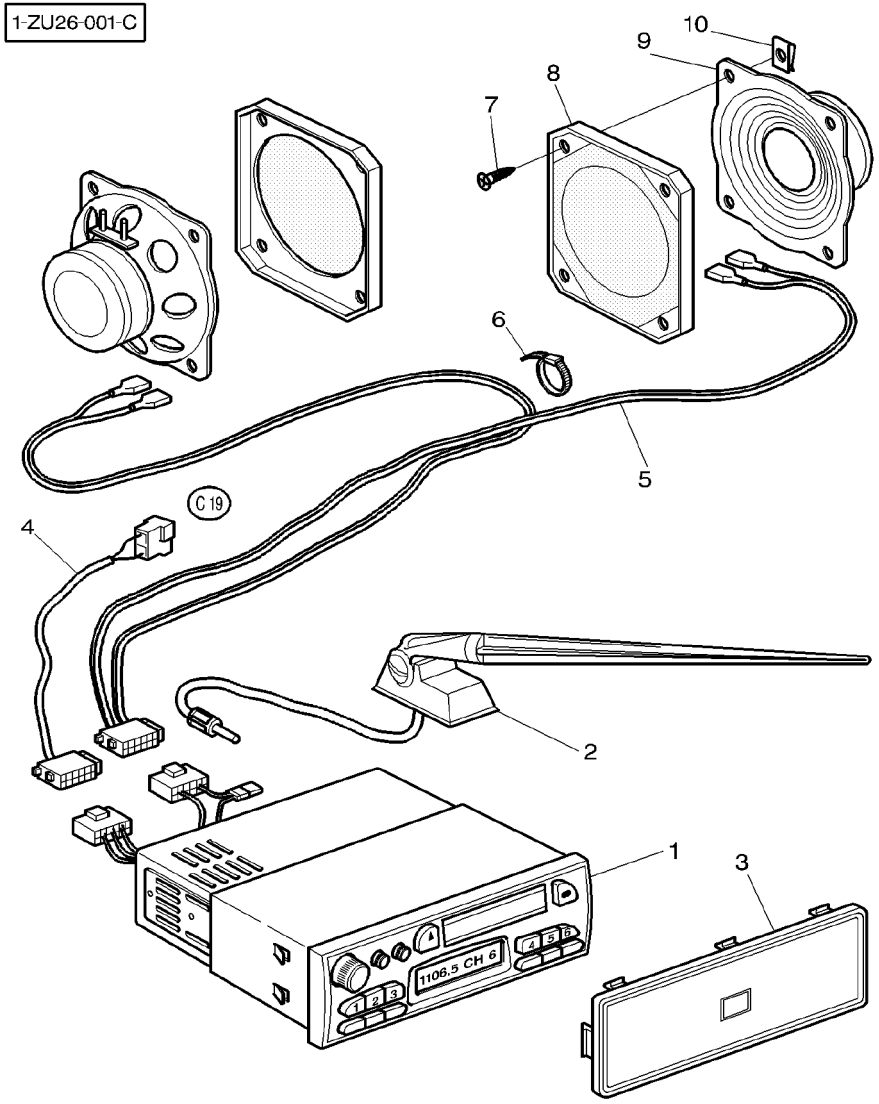

1	3816384M91		**1**	RADIO PUSH BUTT.	RADIO A TOUCHES AUORADIO AUTOM.	DR T MONORADIO RADIO A BOTONES
2	**3617629M92**		**1**	TOP AERIAL	ANTENNE DE TOIT AREATORE ALTO	DACHANTENNE ANTENA/TECHO
3	3580173M1	[A]	**1**	PLATE	PLAQUE PIASTRA	PLATTE PLATO
4	3715099M1		**1**	HARNESS	FAISCEAU FASCIOCAVI	KABELBAUM MAZO CABLES
5	3715100M1		**1**	HARNESS	FAISCEAU FASCIOCAVI	KABELBAUM MAZO CABLES
5	3778108M1	[B]	**1**	HARNESS	FAISCEAU FASCIOCAVI	KABELBAUM MAZO CABLES
6	3619622M1		**1**	CABLE TIE	ATTACHE CABLE FASCETTA CAVI	KABELBINDER ENLACE DE CABLE
7	3580257M1		**8**	SCREW	VIS VITE	SCHRAUBE TORNILLO
8	3617395M1		**2**	GRILLE	GRILLE GRIGLIA	GRILL REJILLA
9	3617394M1		**2**	SPEAKER	HAUT PARLEUR ALTOPARLANTE.	LAUTSPRECHER ALTOVOZ
10	3715142M1		**8**	NUT	ECROU DADO	MUTTER TUERCA

[A] WITHOUT RADIO
SANS RADIO
OHNE RUNDFUNK
SENZA RADIO
SIN RADIO

[B] WITH HIGH VISIBILITY ROOF
AVEC TOIT HAUTE VISIBILITE
MIT DACH MIT SONNENDACH
CON TETTO ALTA VISIBILITA
CON TEJADO ALTA VISIBILIDAD

Radio Installation
Montage Radio
Rundfunk Anbau
Radio Installazione
Radio Instalacion

110-215

United States Only
Etats Unis Seulement
Vereinigten Staaten
Solo Per Stati Uniti
Estados Unidos Solamente

1-ZU26-002-B

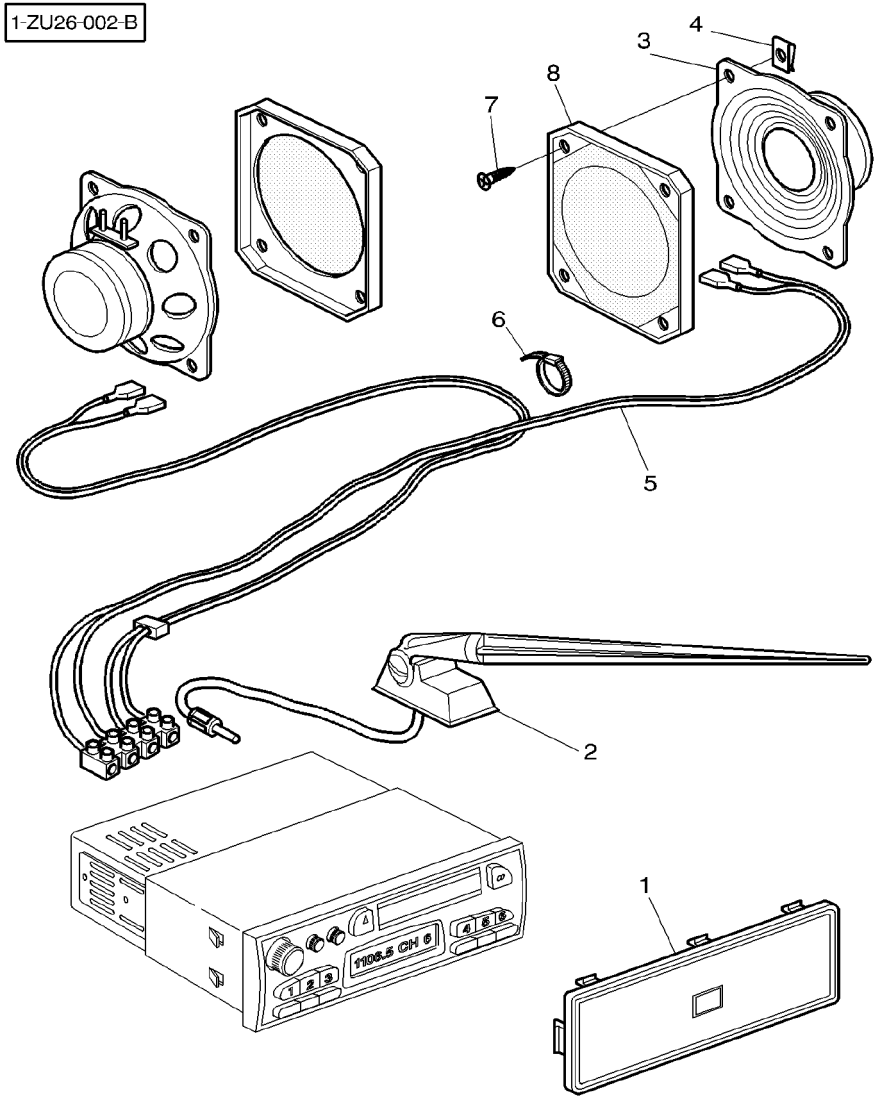

1	3580173M1	[A]	**1**	PLATE	PLAQUE PIASTRA	PLATTE PLATO
2	**3617629M92**		**1**	TOP AERIAL	ANTENNE DE TOIT AREATORE ALTO	DACHANTENNE ANTENA/TECHO
3	3617394M1		**2**	SPEAKER	HAUT PARLEUR ALTOPARLANTE.	LAUTSPRECHER ALTOVOZ
4	3715142M1		**8**	NUT	ECROU DADO	MUTTER TUERCA
5	3388458M4		**1**	HARNESS	FAISCEAU FASCIOCAVI	KABELBAUM MAZO CABLES
5	3780928M1	[B]	**1**	HARNESS	FAISCEAU FASCIOCAVI	KABELBAUM MAZO CABLES
6	3619622M1		**1**	CABLE TIE	ATTACHE CABLE FASCETTA CAVI	KABELBINDER ENLACE DE CABLE
7	3580257M1		**8**	SCREW	VIS VITE	SCHRAUBE TORNILLO
8	3617395M1		**2**	GRILLE	GRILLE GRIGLIA	GRILL REJILLA

[A] WITHOUT RADIO
SANS RADIO
OHNE RUNDFUNK
SENZA RADIO
SIN RADIO

[B] WITH HIGH VISIBILITY ROOF
AVEC TOIT HAUTE VISIBILITE
MIT DACH MIT SONNENDACH
CON TETTO ALTA VISIBILITA
CON TEJADO ALTA VISIBILIDAD

Watch
Montre
Taschenuhr
Orologio
Reloj

110-220

1-ZU18-001-A

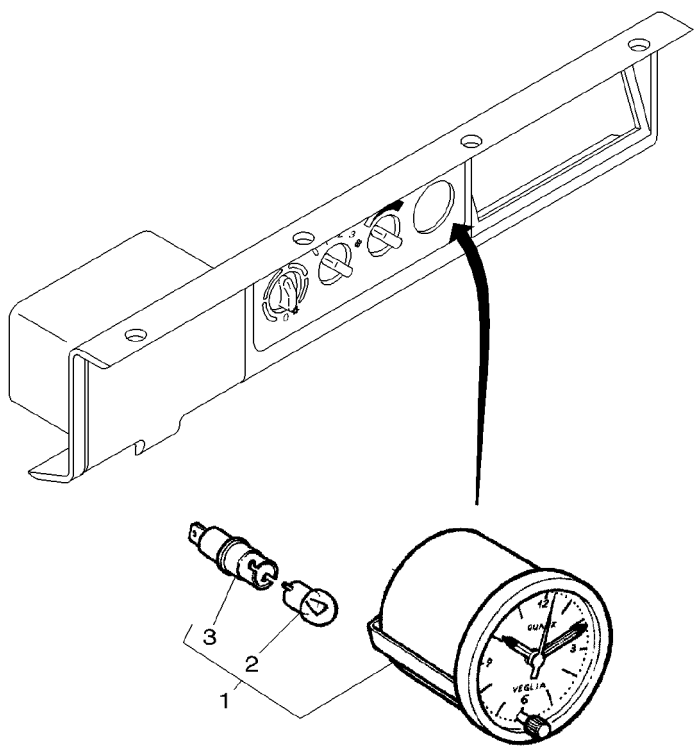

1	3713364M1		**1**	CLOCK	MONTRE OROLOGIO	UHR RELOJ
2	***963333M1***	1	**1**	BULB 12V 5W	AMPOULE 12V 5W BULBO 12V 5W	GLUEHL 12V 5W BOMBILLA 12V 5W
3	3902191M1	1	**1**	LAMP SOCKET	PORTE LAMPE PORTA LAMPADA	LAMPENFASSUNG PORTA LAMPARA

Electrical Plug And Cigar Lighter
Prise De Courant Et Allume Cigare
Elektr. Stecker Und Zigarrenanzuender
Spina Elettrica E Accedisigari
Toma Electrica Y Encendor De Cigarillos

110-225

1-ZU33-001-A

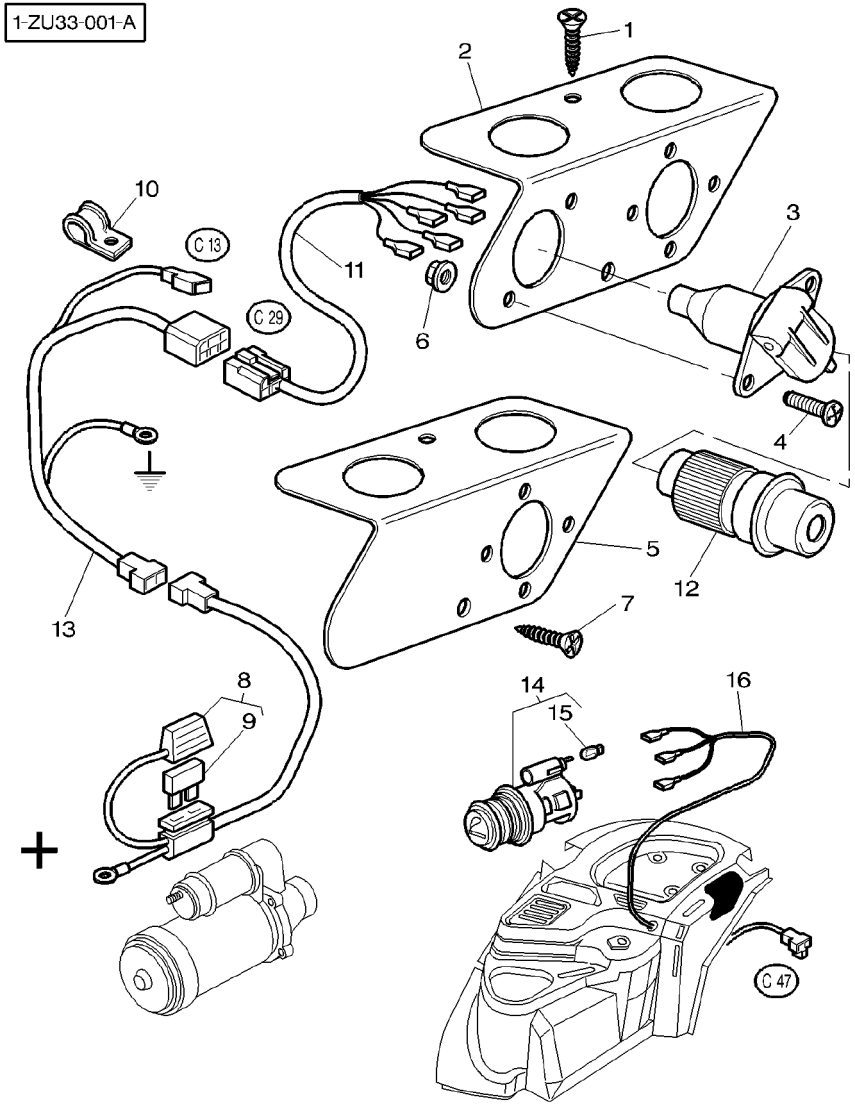

1	**3010506X1**	M5X16		**1**	SCREW	VIS VITE	SCHRAUBE TORNILLO
1	3010578X1	M5X10		**1**	SCREW	VIS VITE	SCHRAUBE TORNILLO
2	3713356M1			**1**	SUPPORT	SUPPORT SUPPORTO	LAGERUNG DISPOS.DE SOSTEN
3	3713127M1			**1**	ELECTRIC SOCKET	PRISE ELEC FEMEL PRESAELETTRIC F	STECKER F TOMACORRIENTE F
4	3000926X1			**2**	SCREW	VIS VITE	SCHRAUBE TORNILLO
5	3713357M1	[A]		**1**	SUPPORT	SUPPORT SUPPORTO	LAGERUNG DISPOS.DE SOSTEN
6	3010477X1			**2**	NUT METRIC	ECROU METRIQUE DADO METRICO	MUTTER METRISCH TUERCA METRICO
7	**3010506X1**			**2**	SCREW	VIS VITE	SCHRAUBE TORNILLO
8	3715073M91			**1**	HARNESS	FAISCEAU FASCIOCAVI	KABELBAUM MAZO CABLES
9	***3712661M1***	8	30 AMP	**1**	FUSE	FUSIBLE FUSIBILE	SICHERUNG FUSIBLE
10	3387578M1			**1**	CLAMP	COLLIER FASCETTA	HALTESCHELLE ABRAZADERA
11	3714516M1			**1**	HARNESS	FAISCEAU FASCIOCAVI	KABELBAUM MAZO CABLES
12	***3760032M1***			**1**	ELECTRICAL PLUG	PRISE ELECTRIQUE PRESAELETTRICITA	STECKER TOMACORRIENTE
13	3714515M1			**1**	HARNESS	FAISCEAU FASCIOCAVI	KABELBAUM MAZO CABLES
14	3617848M91			**1**	LIGHTER	ALLUME CIGARE ACCENDISIGARI	ZIG.ANZUENDER ENCENDEDOR
15	***3302213M1***	14		**1**	BULB 12V 1.2W	AMPOULE 12V 1.2W BULBO 12V 1,2W	GLUEHL 12V 1.2W BOMBILLA 12V1,2W
16	3714566M1			**1**	HARNESS	FAISCEAU FASCIOCAVI	KABELBAUM MAZO CABLES

[A] WITHOUT ELECTRICAL PLUG
SANS PRISE DE COURANT
OHNE STECKDOSE
SENZA PRESA DI CORRENTE
SIN ENCHUFE HEMBRA

Electrical Plug And Cigar Lighter
Prise De Courant Et Allume Cigare
Elektr. Stecker Und Zigarrenanzuender
Spina Elettrica E Accedisigari
Toma Electrica Y Encendor De Cigarillos

110-230

United States Only
Etats Unis Seulement
Vereinigten Staaten
Solo Per Stati Uniti
Estados Unidos Solamente

1-ZU33-002-B

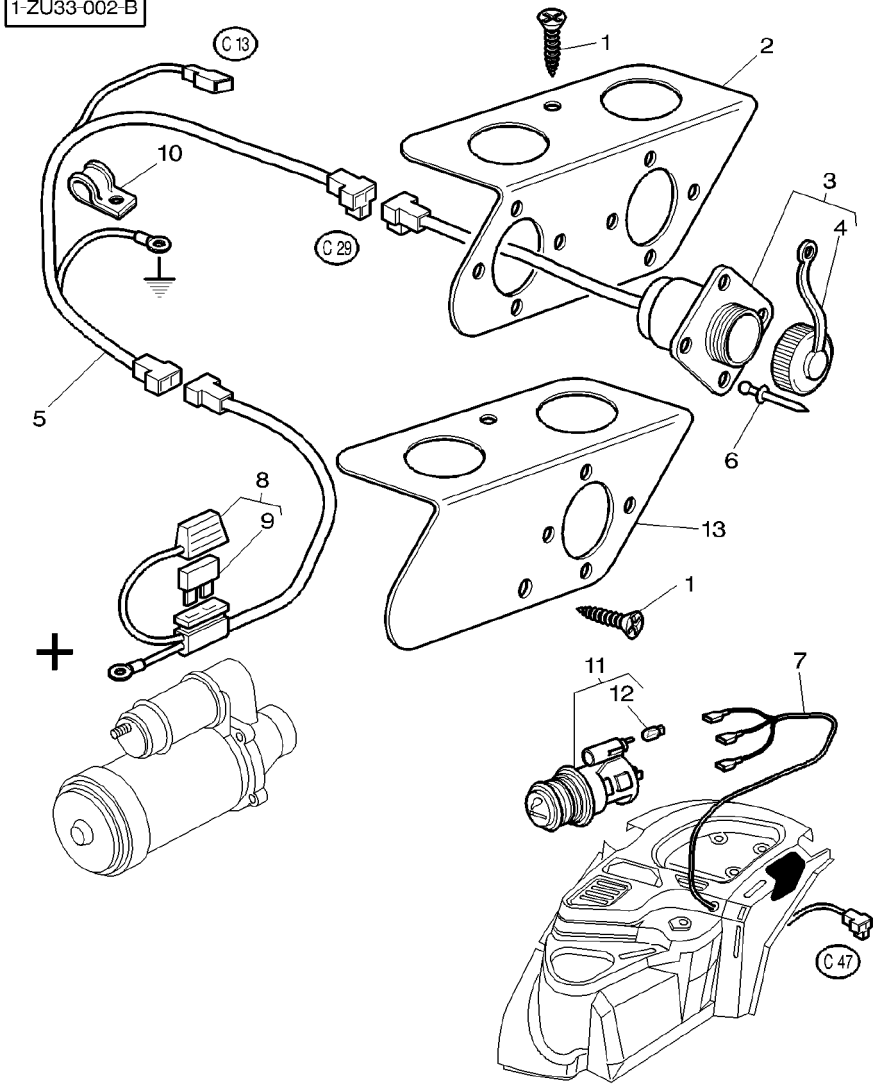

1	**3010506X1**		M5X16	**4**	SCREW	VIS VITE	SCHRAUBE TORNILLO
2	3779807M1			**1**	SUPPORT	SUPPORT SUPPORTO	LAGERUNG DISPOS.DE SOSTEN
3	3779785M2			**1**	INTAKE	PRISE ASPIRAZIONE	SAUGROHR ENTRADA
4	3900383M1	3		**1**	PLUG	BOUCHON TAPPO	VERSCHL.STOPFEN TAPON
5	3779784M1			**1**	HARNESS	FAISCEAU FASCIOCAVI	KABELBAUM MAZO CABLES
6	391349X1			**4**	RIVET	RIVET RIVETTO	NIET REMACHE
7	3714566M1			**1**	HARNESS	FAISCEAU FASCIOCAVI	KABELBAUM MAZO CABLES
8	3715073M91			**1**	HARNESS	FAISCEAU FASCIOCAVI	KABELBAUM MAZO CABLES
9	***3712661M1***	8	30 AMP	**1**	FUSE	FUSIBLE FUSIBILE	SICHERUNG FUSIBLE
10	3387578M1			**1**	CLAMP	COLLIER FASCETTA	HALTESCHELLE ABRAZADERA
11	3617848M91			**1**	LIGHTER	ALLUME CIGARE ACCENDISIGARI	ZIG.ANZUENDER ENCENDEDOR
12	***3405185M1***	11		**1**	BULB 12V 1.2W	AMPOULE 12V 1.2W BULBO 12V 1,2W	GLUEHL 12V 1.2W BOMBILLA 12V1,2W
13	3713357M1		[A]	**1**	SUPPORT	SUPPORT SUPPORTO	LAGERUNG DISPOS.DE SOSTEN

[A] WITHOUT ELECTRICAL PLUG
SANS PRISE DE COURANT
OHNE STECKDOSE
SENZA PRESA DI CORRENTE
SIN ENCHUFE HEMBRA

1-ZU29-001-A

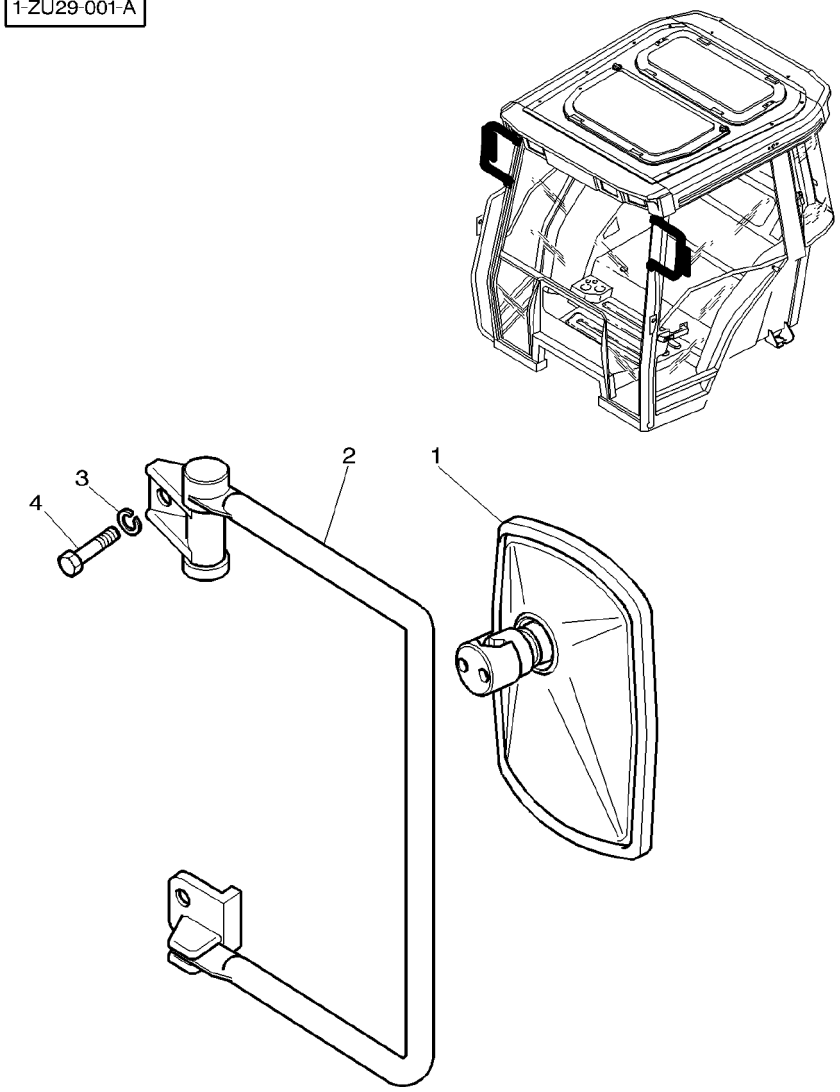

1	3806614M91		**2** MIRROR	RETROVISEUR SPECCHIETTO	RUECKSPIEGEL RETROVISOR
2	3806610M92	◀	**1** ARM	BRAS BRACCIO	ARM BRAZO
2	3806611M92	▶	**1** ARM	BRAS BRACCIO	ARM BRAZO
3	385361X1		**4** WASHER METRIC	RONDELLE METR. RONDELLA METRICO	SCHEIBE METRISCH ARANDELA METRICO
4	339123X1	M8X20	**4** SCREW METRIC	VIS METRIQUE VITE METRICA	SCHRAUBE METR TORNILLO METRICO

1-ZU29-002-B

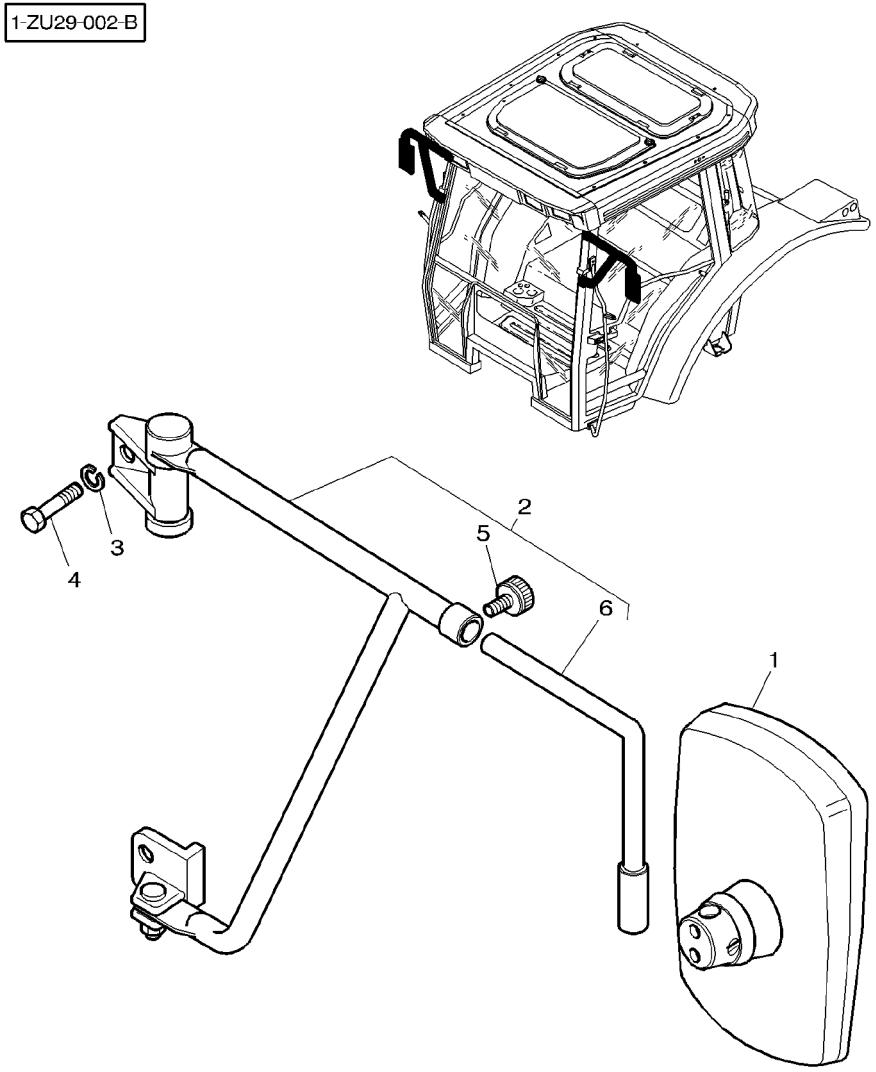

1	3818552M1		**1**	MIRROR	RETROVISEUR SPECCHIETTO	RUECKSPIEGEL RETROVISOR
2	3818647M92	◀	**1**	ARM	BRAS BRACCIO	ARM BRAZO
2	3818648M92	▶	**1**	ARM	BRAS BRACCIO	ARM BRAZO
3	385361X1		**4**	WASHER METRIC	RONDELLE METR. RONDELLA METRICO	SCHEIBE METRISCH ARANDELA METRICO
4	339123X1		**4**	SCREW METRIC	VIS METRIQUE VITE METRICA	SCHRAUBE METR TORNILLO METRICO
5	3903400M91	2	**1**	SETSCREW	VIS DE BLOCAGE INSIEME VITI	STELLSCHRAUBE TORNILLO AJUSTE
6	3903399M91	2	**1**	STEM	TIGE STELO	STIEL VASTAGO

1-ZU30-001-A

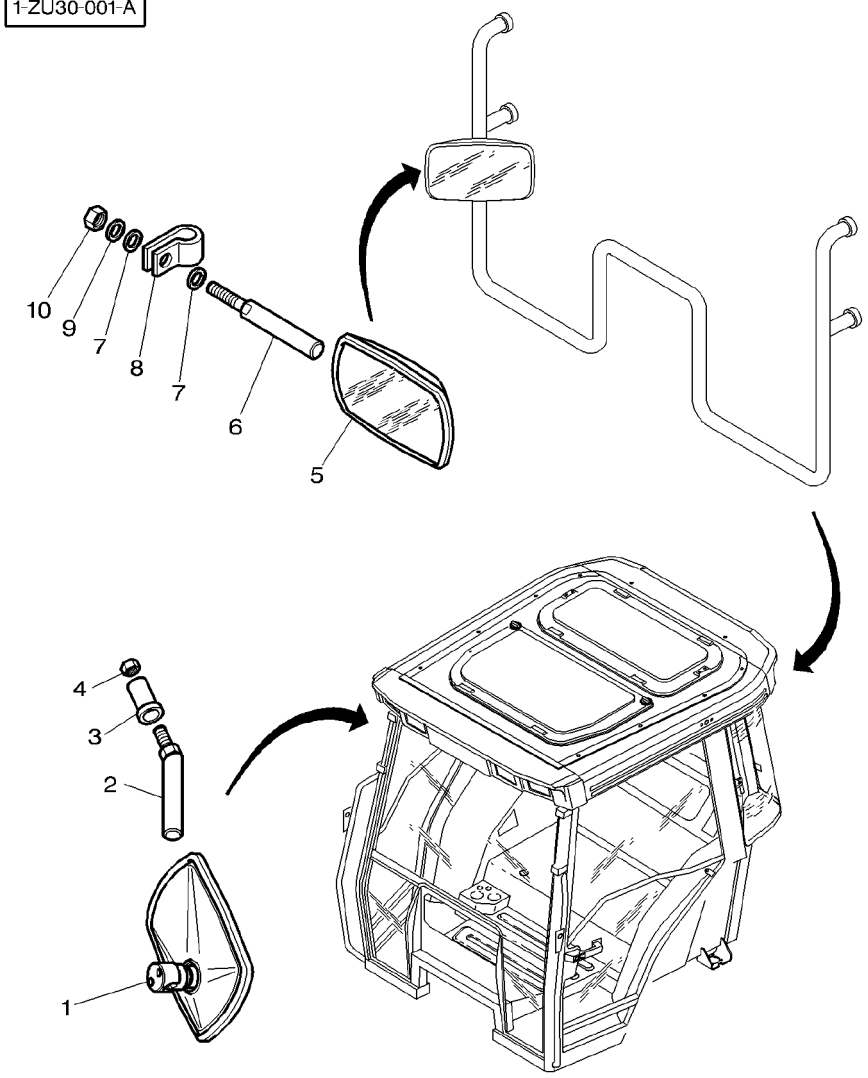

1	3806618M91		**1**	MIRROR	RETROVISEUR SPECCHIETTO	RUECKSPIEGEL RETROVISOR
2	3778091M1		**1**	CLEVIS PIN	AXE PERNO D'ATTACCO	SPLINTBOLZEN BULON CILINDRICO
3	3778092M1	[A]	**1**	SPACER	ENTRETOISE DISTANZIALE	ABSTANDSTUECK PIEZA DISTANCIA
4	3009693X1	M10	**1**	NUT METRIC	ECROU METRIQUE DADO METRICO	MUTTER METRISCH TUERCA METRICO
5	3806618M91		**1**	MIRROR	RETROVISEUR SPECCHIETTO	RUECKSPIEGEL RETROVISOR
6	3581239M1		**1**	CLEVIS PIN	AXE PERNO D'ATTACCO	SPLINTBOLZEN BULON CILINDRICO
7	385362X1		**2**	WASHER METRIC	RONDELLE METR. RONDELLA METRICO	SCHEIBE METRISCH ARANDELA METRICO
8	**3581507M1**		**1**	CLAMP	COLLIER FASCETTA	HALTESCHELLE ABRAZADERA
9	391026X1		**1**	LOCK WASHER	RONDELLE FREIN ROSETTA ELASTICA	FEDERRING ARANDELA GROWER
10	3009693X1	M10	**1**	NUT METRIC	ECROU METRIQUE DADO METRICO	MUTTER METRISCH TUERCA METRICO

[A] WITH HIGH VISIBILITY ROOF
AVEC TOIT HAUTE VISIBILITE
MIT DACH MIT SONNENDACH
CON TETTO ALTA VISIBILITA
CON TEJADO ALTA VISIBILIDAD

Seat	**Grammer**
Siege	**Grammer**
Fahrersitz	**Grammer**
Sedile	**Grammer**
Asiento	**Grammer**

110-250

1-ZV01-001-B

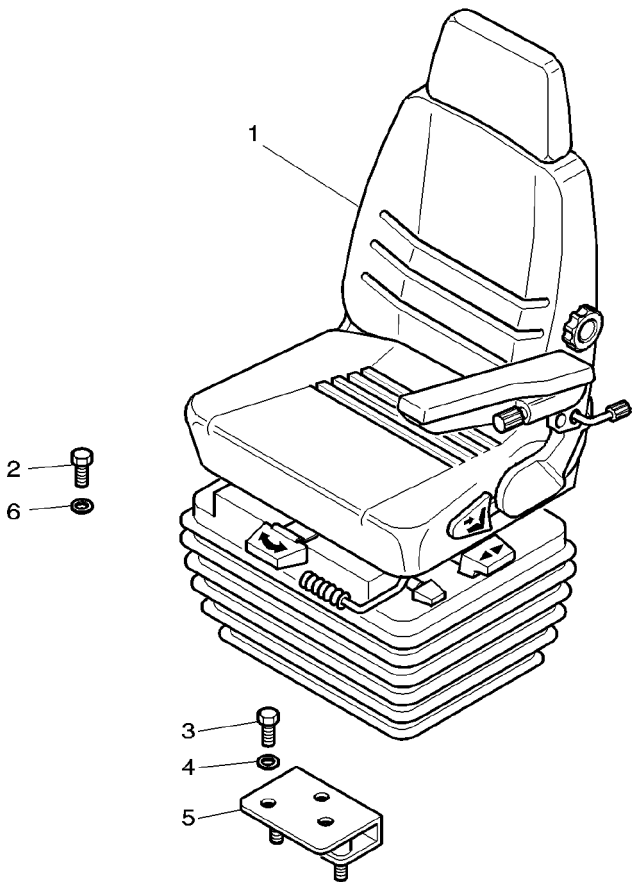

1	3780646M91	[A] 110−255 No 1 110−260 No 1	**1**	SEAT	SIEGE SEDILE	SITZ ASIENTO
1	3779611M91	[B] 110−265 No 110−270 No	**1**	SEAT	SIEGE SEDILE	SITZ ASIENTO
1	3780629M91	[C] 110−265 No 110−275 No	**1**	SEAT	SIEGE SEDILE	SITZ ASIENTO
2	391989X1	M8x20	**4**	SCREW METRIC	VIS METRIQUE VITE METRICA	SCHRAUBE METR TORNILLO METRICO
2	1441000X1	M8x16	**4**	SCREW METRIC	VIS METRIQUE VITE METRICA	SCHRAUBE METR TORNILLO METRICO
3	339124X1	M8x16	**3**	SCREW METRIC	VIS METRIQUE VITE METRICA	SCHRAUBE METR TORNILLO METRICO
4	390972X1	M8	**3**	WASHER METRIC	RONDELLE METR. RONDELLA METRICO	SCHEIBE METRISCH ARANDELA METRICO
5	3780410M1		**1**	PLATE	PLAQUE PIASTRA	PLATTE PLATO
6	390972X1	M8	**4**	WASHER METRIC	RONDELLE METR. RONDELLA METRICO	SCHEIBE METRISCH ARANDELA METRICO

[A] MECHANICAL SEAT
SIEGE MECANIQUE
MECHANSITZ
SEDILE MECCANICI
ASIENTO MECANICO

[B] AIR PRESSURE SEAT WITH AUTOMATIC ADJUSTMENT
SIEGE PNEUMATIQUE AVEC REGLAGE AUTOMATIQUE
LUFTPOLSTERUNGSITZ MIT AUTOMATISCHEINSTELLUNG
SEDILE PNEUMATICO CON AGGIUSTATORE AUTOMATICO
ASIENTO PNEUMATICO CON AJUSTE AUTOMATICO

[C] AIR PRESSURE SEAT WITH MANUAL ADJUSTMENT
SIEGE PNEUMATIQUE AVEC REGLAGE MANUEL
LUFTPOLSTERUNGSITZ MIT HANDSCHALTEINSTELLUNG
SEDILE PNEUMATICO CON AGGIUSTATORE MANUALE
ASIENTO PNEUMATICO CON AJUSTE MANUAL

Seat **Siege** **Fahrersitz** **Sedile** **Asiento**	**Grammer** **Grammer** **Grammer** **Grammer** **Grammer**	**110-255**	**Mechanical Seat** **Siege Mecanique** **Mechansitz** **Sedile Meccanici** **Asiento Mecanico**

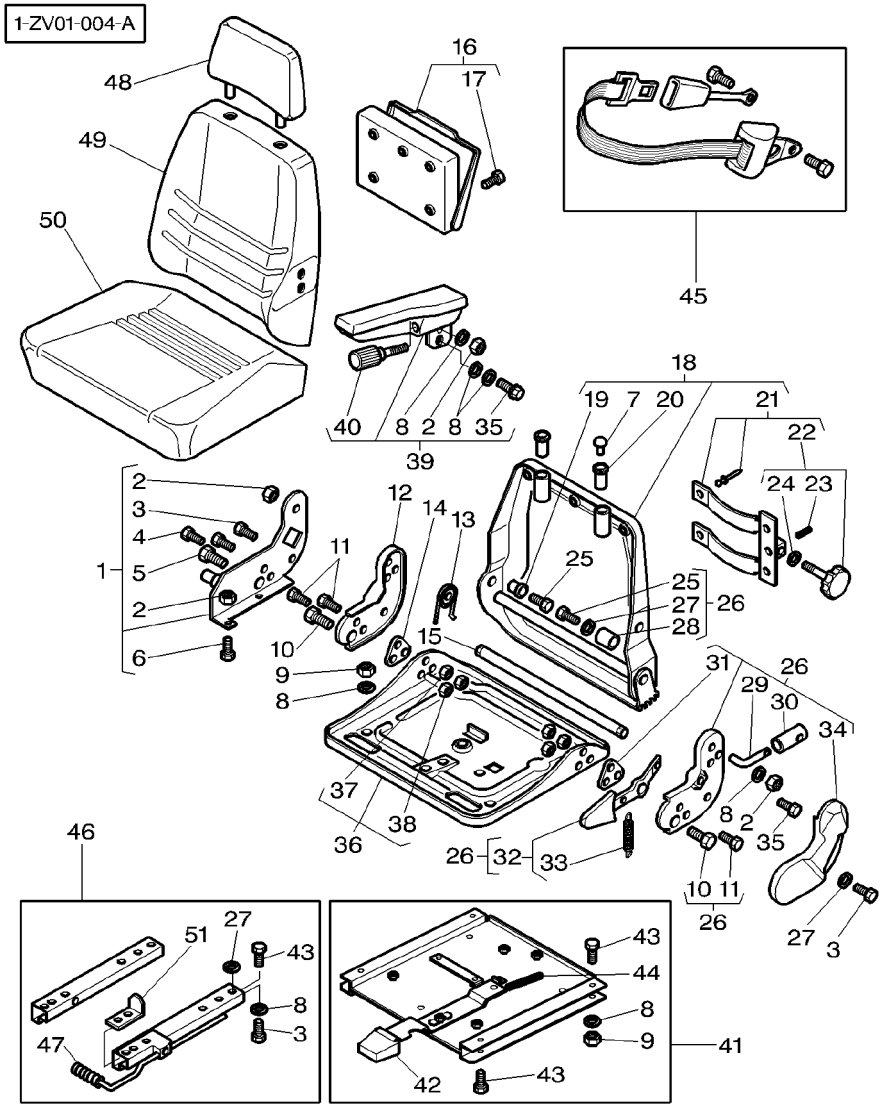

1	3903086M91		**1**	SUPPORT	SUPPORT SUPPORTO	LAGERUNG DISPOS.DE SOSTEN
2	1441461X1	M8	**3**	NUT METRIC	ECROU METRIQUE DADO METRICO	MUTTER METRISCH TUERCA METRICO
3	391148X1	M8x20	**3**	SCREW METRIC	VIS METRIQUE VITE METRICA	SCHRAUBE METR TORNILLO METRICO
4	1440349X1	M8x30	**2**	SCREW METRIC	VIS METRIQUE VITE METRICA	SCHRAUBE METR TORNILLO METRICO
5	3903094M1	∅ 7/16"–20 ◀▶ 35 MM	**1**	SCREW	VIS VITE	SCHRAUBE TORNILLO
6	3009439X1	M8x16	**1**	SCREW	VIS VITE	SCHRAUBE TORNILLO
7	3101653M1		**2**	CAP	CHAPEAU CAPPELLO	KAPPE TAPA
8	391565X1	∅ 8 MM	**11**	WASHER METRIC	RONDELLE METR. RONDELLA METRICO	SCHEIBE METRISCH ARANDELA METRICO
9	339169X1	∅ M8	**8**	NUT METRIC	ECROU METRIQUE DADO METRICO	MUTTER METRISCH TUERCA METRICO
10	353561X1	∅ 7/16"–20 ◀▶ 30 MM	**2**	SCREW UNF	VIS UNF VITE UNF	SCHRAUBE UNF TORNILLO UNF
11	391990X1	M8x25	**4**	SCREW METRIC	VIS METRIQUE VITE METRICA	SCHRAUBE METR TORNILLO METRICO
12	3105795M1		**1**	SUPPORT	SUPPORT SUPPORTO	LAGERUNG DISPOS.DE SOSTEN
13	3105793M1		**1**	SPRING	RESSORT MOLLA	FEDER MUELLE
14	3903073M1		**1**	PLATE	PLAQUE PIASTRA	PLATTE PLATO
15	3903074M1		**1**	TUBE	TUBE TUBO	ROHR TUBO
16	3903085M91		**1**	POCKET	POCHE SACCA	TASCHE BOLSA
17	3903093M1	∅ 4 MM	**4**	SCREW	VIS VITE	SCHRAUBE TORNILLO
18	3903070M91		**1**	FRAME	BATI TELAIO	RAHMEN BASTIDOR
19	3903075M1		**1**	INSERT	DOUILLE INSERTO	EINSATZSTUECK INSERCION
20	3101494M1		**2**	BUSH	BAGUE BOCCOLA	BUCHSE CASQUILLO
21	3903071M91		**1**	SUPPORT	SUPPORT SUPPORTO	LAGERUNG DISPOS.DE SOSTEN
22	3903072M91		**1**	STEM	TIGE STELO	STIEL VASTAGO
23	3009322X1	∅ 3 MM ◀▶ 18 MM	**1**	SPIROL PIN	GOUPILLE SPIRALE SPINA ESPANSIONE	SPIRALSTIFT PASADOR ESPIRAL
24	1444351X1	∅ 13 MM	**1**	WASHER	RONDELLE RONDELLA	UNTERLEGSCHEIBE ARANDELA
25	339287X1	M8x35	**2**	SCREW METRIC	VIS METRIQUE VITE METRICA	SCHRAUBE METR TORNILLO METRICO
26	3903079M91		**1**	DRIVEN PLATE	PLAQUE GUIDE PIASTRA DI GUIDA	MITNEHMERSCHE. DISCO RECEPTOR

Seat Siege Fahrersitz Sedile Asiento	Grammer Grammer Grammer Grammer Grammer	**110-255**	**Mechanical Seat** **Siege Mecanique** **Mechansitz** **Sedile Meccanici** **Asiento Mecanico**

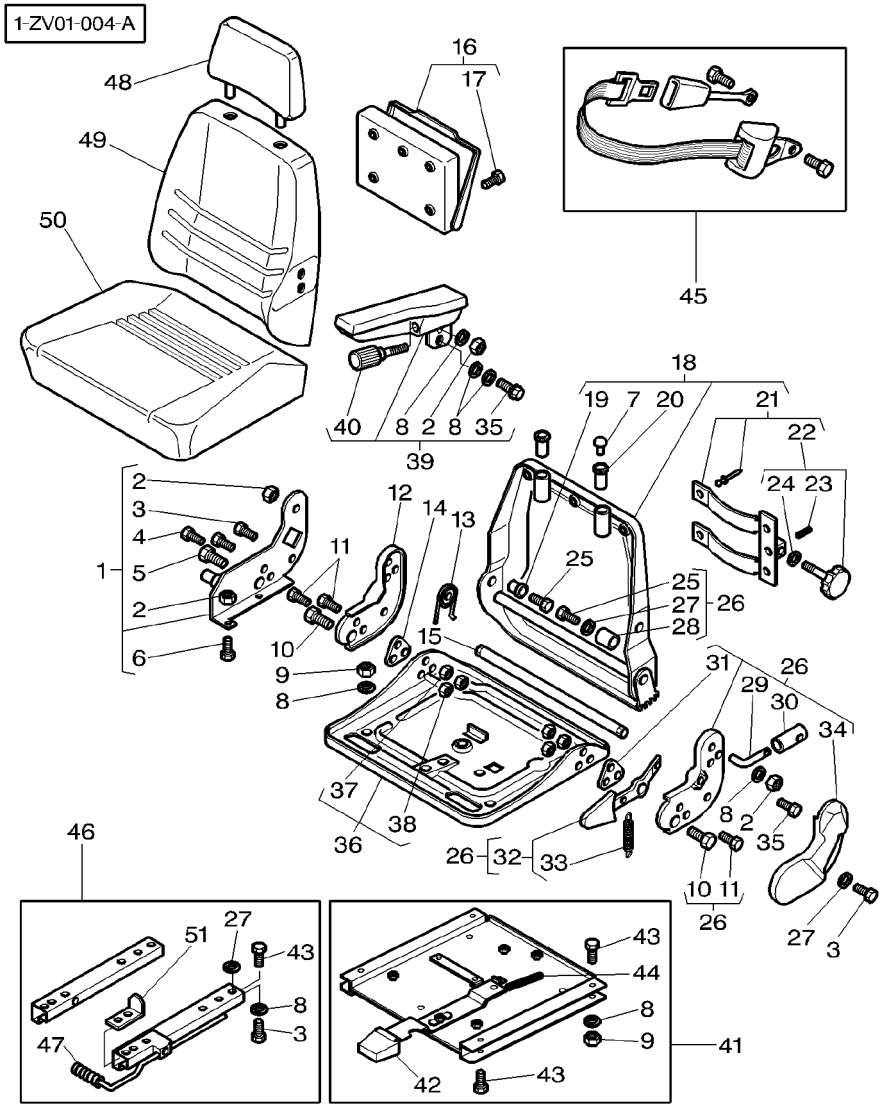

27	391039X1	∅ 8 MM	**5**	WASHER METRIC	RONDELLE METR. RONDELLA METRICO	SCHEIBE METRISCH ARANDELA METRICO
28	3903076M1		**1**	TUBE	TUBE TUBO	ROHR TUBO
29	3903080M1		**1**	LEVER	LEVIER LEVA	HEBEL PALANCA
30	3903081M1		**1**	HANDLE	POIGNEE MANIGLIA	HANDGRIFF MANETA
31	3903077M1		**1**	PLATE	PLAQUE PIASTRA	PLATTE PLATO
32	3903078M91		**1**	LEVER	LEVIER LEVA	HEBEL PALANCA
33	3105797M1		**1**	SPRING	RESSORT MOLLA	FEDER MUELLE
34	3903082M1		**1**	HOUSING	CARTER CARCASSA	GEHAEUSE ALOJAMIENTO
35	3101996M1	M8x16	**1**	SCREW SPECIAL	VIS SPECIALE VITE SPECIALE	SPEZIALSCHRAUBE TORNILLO ESPEC.
36	3903083M91		**1**	FRAME	BATI TELAIO	RAHMEN BASTIDOR
37	339169X1	∅ M8	**4**	NUT METRIC	ECROU METRIQUE DADO METRICO	MUTTER METRISCH TUERCA METRICO
38	353428X1	∅ 7/16"-20	**2**	NUT UNF	ECROU UNF DADO UNF	MUTTER UNF TUERCA UNF
39	3903099M91		**1**	ARMREST	ACCOUDOIR BRACCIOLO	ARMLEHNE REPOSA BRAZOS
40	3903098M1		**1**	STEM	TIGE STELO	STIEL VASTAGO
41	3903100M91		**1**	PLATE	PLAQUE PIASTRA	PLATTE PLATO
42	3903102M1		**1**	HANDLE	POIGNEE MANIGLIA	HANDGRIFF MANETA
43	1441000X1	M8x16	**12**	SCREW METRIC	VIS METRIQUE VITE METRICA	SCHRAUBE METR TORNILLO METRICO
44	3903101M1		**1**	SPRING	RESSORT MOLLA	FEDER MUELLE
45	3903092M1		**1**	SAFETY BELT	CEINTURE DE PROT CINTURA DI SOST.	SICHERHEITSGURT CINTURA DE SEGUR
46	3903088M91		**1**	KIT, GUIDE	JEU GUIDE KIT GUIDA	FUEHRUNGSSATZ JUEGO DE GUIA
47	3903087M1		**1**	HANDLE	POIGNEE MANIGLIA	HANDGRIFF MANETA
48	3779612M1		**1**	HEAD REST	REPOSE TETE POGGIA TESTA	KOPFSTUETZE APOYA CABEZA
49	3903118M1		**1**	CUSHION	COUSSIN CUSCINO	POLSTER COJIN
50	3903117M1		**1**	CUSHION	COUSSIN CUSCINO	POLSTER COJIN
51	3903142M1		**1**	STRAP	PATTE CORREGGIA	LASCHE FAJA

Seat	Grammer	110-260
Siege	Grammer	
Fahrersitz	Grammer	
Sedile	Grammer	
Asiento	Grammer	

Mechanical Seat
Siege Mecanique
Mechansitz
Sedile Meccanici
Asiento Mecanico

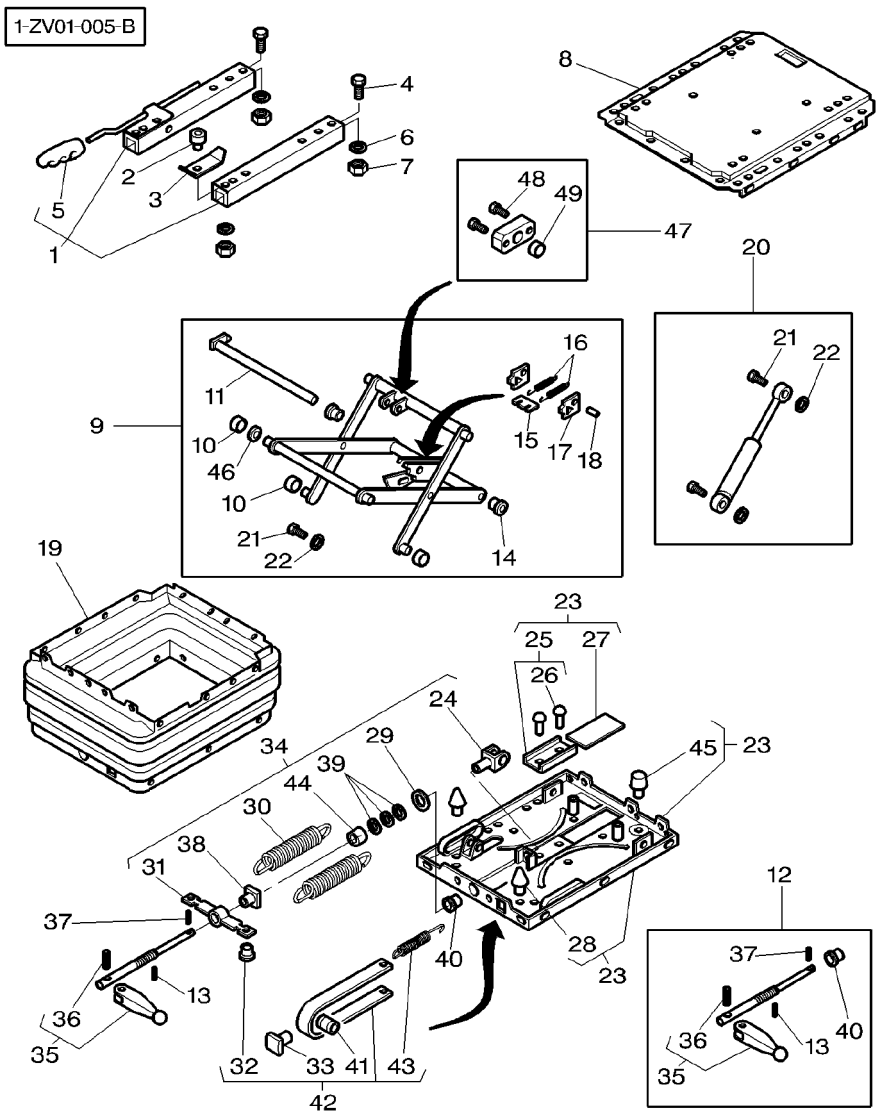

1	3903286M91		1	KIT, GUIDE	JEU GUIDE KIT GUIDA	FUEHRUNGSSATZ JUEGO DE GUIA
2	3903291M1		1	ROLLER	GALET RULLO	ROLLE RODILLO
3	3903142M1		1	STRAP	PATTE CORREGGIA	LASCHE FAJA
4	1441000X1	M8x16	3	SCREW METRIC	VIS METRIQUE VITE METRICA	SCHRAUBE METR TORNILLO METRICO
5	3903087M1		1	HANDLE	POIGNEE MANIGLIA	HANDGRIFF MANETA
6	391039X1	∅ 8,4 MM	4	WASHER METRIC	RONDELLE METR. RONDELLA METRICO	SCHEIBE METRISCH ARANDELA METRICO
7	339169X1	∅ M8	4	NUT METRIC	ECROU METRIQUE DADO METRICO	MUTTER METRISCH TUERCA METRICO
8	3903274M91		1	FIT PLATE SEAT	PLAQUE MONT SIEG FISSAGGIO SEDILE	SITZMONT.PLATTE PLACA FIJ.ASIENT
9	3903290M91		1	SUSPENSION	SUSPENSION SOSPENSIONE	AUFHAENGUNG SUSPENSION
10	1719914M1		4	ROLLER	GALET RULLO	ROLLE RODILLO
11	3103597M1		1	STEM	TIGE STELO	STIEL VASTAGO
12	3903287M91		1	STEM	TIGE STELO	STIEL VASTAGO
13	3903277M1	∅ 3 MM ◀▶ 18 MM	1	PIN	GOUPILLE PERNO	BOLZEN PASADOR
14	3103596M1		2	BUSH	BAGUE BOCCOLA	BUCHSE CASQUILLO
15	1719910M1		1	PLATE	PLAQUE PIASTRA	PLATTE PLATO
16	3903148M1		2	SPRING	RESSORT MOLLA	FEDER MUELLE
17	3903275M1		2	SHIELD	TOLE RIPARO	SCHILD BLINDAJE
18	1719923M1		1	PIN	GOUPILLE PERNO	BOLZEN PASADOR
19	3903145M1		1	BELLOWS	SOUFFLET SOFFIETTO	FALTENBALG FUELLE
20	3903276M91		1	SHOCK ABSORBER	AMORTISSEUR AMMORTIZZATORE	STOSSDAEMPFER AMORTIGUADOR
21	1719935M1		2	PIN	GOUPILLE PERNO	BOLZEN PASADOR
22	1442783X1		2	CIRCLIP	SEGMENT D ARRET ANELLO D'ARRESTO	SICHERUNGSRING CIRCULITO
23	3903281M91		1	FIT PLATE SEAT	PLAQUE MONT SIEG FISSAGGIO SEDILE	SITZMONT.PLATTE PLACA FIJ.ASIENT
24	3103605M1		1	FORK	FOURCHETTE FORCA	GABEL HORQUILLA
25	3103612M91		1	PLATE	PLAQUE PIASTRA	PLATTE PLATO
26	338627X1	∅ 4 MM ◀▶ 10 MM	2	RIVET	RIVET RIVETTO	NIET REMACHE

Seat Siege Fahrersitz Sedile Asiento	Grammer Grammer Grammer Grammer Grammer	**110-260**	**Mechanical Seat** **Siege Mecanique** **Mechansitz** **Sedile Meccanici** **Asiento Mecanico**

1-ZV01-005-B

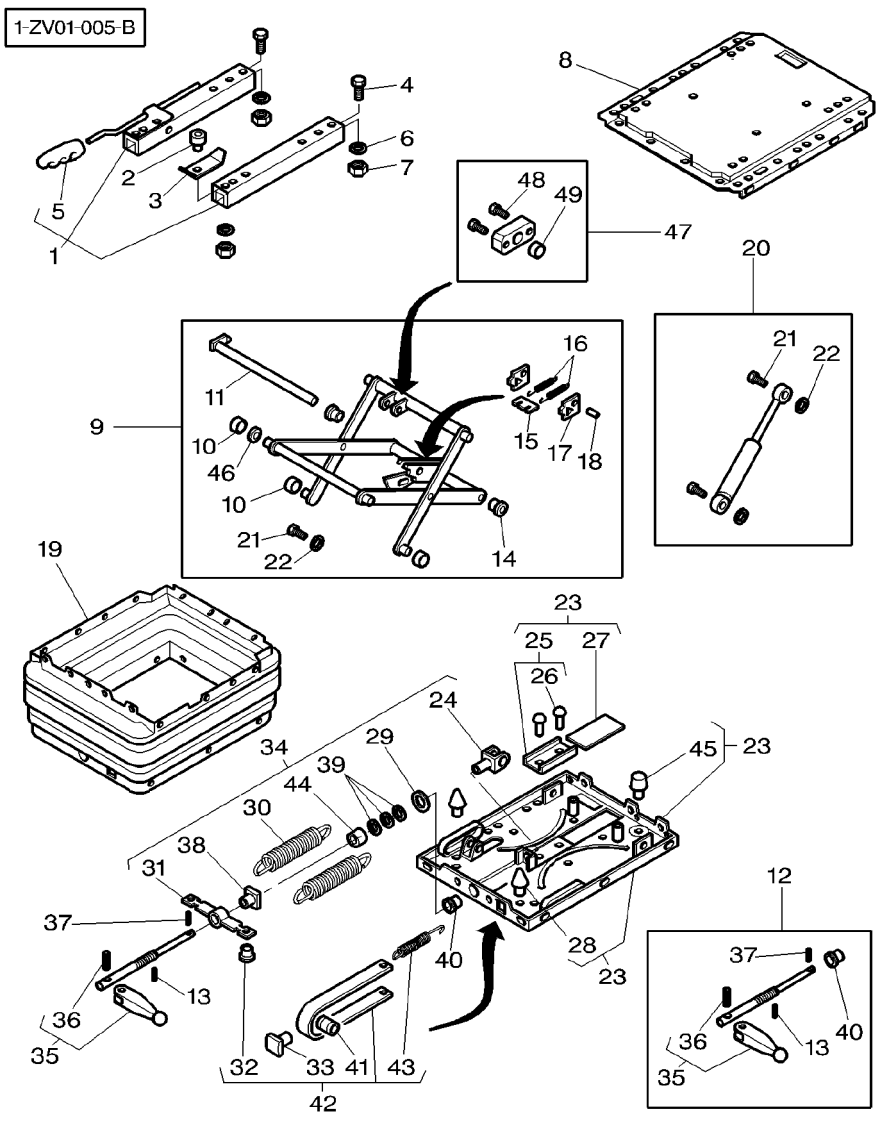

27	1719917M1			**1**	PLATE	PLAQUE PIASTRA	PLATTE PLATO
28	3903282M1			**2**	BUFFER	BUTOIR RESPINGENTE	PUFFER PARACHOQUES
29	1719902M1			**1**	WASHER	RONDELLE RONDELLA	UNTERLEGSCHEIBE ARANDELA
30	3903278M1			**2**	TENSION SPRING	RESSORT TRACTION MOLLA TENDITRICE	ZUGFEDER RESORTE TENSOR
31	1719900M1			**1**	SUPPORT	SUPPORT SUPPORTO	LAGERUNG DISPOS.DE SOSTEN
32	1719918M1			**1**	PLUG	BOUCHON TAPPO	VERSCHL.STOPFEN TAPON
33	1719891M1			**1**	GUIDE	GUIDE GUIDA	FUEHRUNG GUIA
34	3903280M91			**1**	PARTS PACK	JEU PIECES PACCO RICAMBI	SATZ TEILE PAQUETE PIEZAS
35	3903133M91			**1**	TOGGLE	ROTULE ROTULA	GELENKZAPFEN PERNO ENGANCHE
36	3903153M1	∅ 4 MM ◀▶ 28 MM		**1**	PIN	GOUPILLE PERNO	BOLZEN PASADOR
37	3903152M1	∅ 3 MM ◀▶ 16 MM		**1**	PIN	GOUPILLE PERNO	BOLZEN PASADOR
38	1719920M1	∅ M12		**1**	NUT SPECIAL	ECROU SPECIAL DADO SPECIALE	SPEZIALMUTTER TUERCA ESPECIAL
39	1719921M1			**1**	BEARING	COUSSINET CUSCINETTO	LAGER COJINETE
40	3103608M1			**1**	BUSH	BAGUE BOCCOLA	BUCHSE CASQUILLO
41	1719903M1			**1**	ROLLER	GALET RULLO	ROLLE RODILLO
42	3903285M91			**1**	PARTS PACK	JEU PIECES PACCO RICAMBI	SATZ TEILE PAQUETE PIEZAS
43	1719932M1			**1**	SPRING	RESSORT MOLLA	FEDER MUELLE
44	3903279M1			**1**	TUBE	TUBE TUBO	ROHR TUBO
45	3903283M1			**1**	BUFFER	BUTOIR RESPINGENTE	PUFFER PARACHOQUES
46	3903284M1			**2**	INSERT	DOUILLE INSERTO	EINSATZSTUECK INSERCION
47	3903288M91			**1**	BEARING CARRIER	PALIER CUSCINETTO SUPP-	LAGER-GEHAEUSE TEJUELO
48	339560X1	47	M6x16	**4**	SCREW METRIC	VIS METRIQUE VITE METRICA	SCHRAUBE METR TORNILLO METRICO
49	3903289M1	47		**2**	INSERT	DOUILLE INSERTO	EINSATZSTUECK INSERCION

Seat	Grammer	110-265
Siege	Grammer	
Fahrersitz	Grammer	
Sedile	Grammer	
Asiento	Grammer	

Air Ride Seat & Suspension
Siege A Suspension Pneumatique
Sits Mit Luft Aufhaengung
Sedile Pneumatico
Asiento Pneumatico

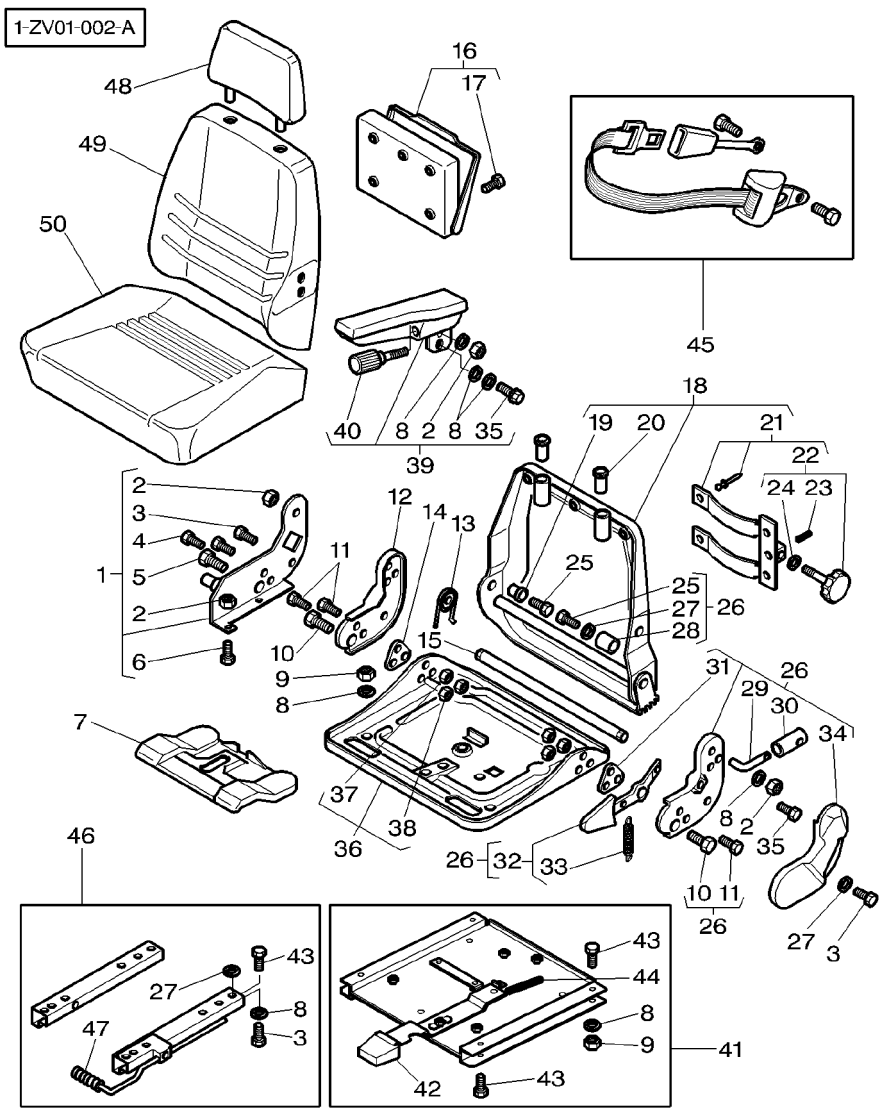

1	3903086M91		1	SUPPORT	SUPPORT SUPPORTO
2	1441461X1	M8	3	NUT METRIC	ECROU METRIQUE DADO METRICO
3	391148X1	M8x20	3	SCREW METRIC	VIS METRIQUE VITE METRICA
4	1440349X1	M8x30	2	SCREW METRIC	VIS METRIQUE VITE METRICA
5	3903094M1	∅ 7/16"–20 ◀▶ 35 MM	1	SCREW	VIS VITE
6	3009439X1	M8x16	1	SCREW	VIS VITE
7	3903084M91		1	DRIVEN PLATE	PLAQUE GUIDE PIASTRA DI GUIDA
8	390972X1	∅ 8 MM	11	WASHER METRIC	RONDELLE METR. RONDELLA METRICO
9	339169X1	M8	4	NUT METRIC	ECROU METRIQUE DADO METRICO
10	353561X1	∅ 7/16"–20 ◀▶ 30 MM	2	SCREW UNF	VIS UNF VITE UNF
11	391990X1	M8x25	4	SCREW METRIC	VIS METRIQUE VITE METRICA
12	3105795M1		1	SUPPORT	SUPPORT SUPPORTO
13	3105793M1		1	SPRING	RESSORT MOLLA
14	3903073M1		1	PLATE	PLAQUE PIASTRA
15	3903074M1		1	TUBE	TUBE TUBO
16	3903085M91		1	POCKET	POCHE SACCA
17	3903093M1	∅ 4 MM	4	SCREW	VIS VITE
18	3903070M91		1	FRAME	BATI TELAIO
19	3903075M1		1	INSERT	DOUILLE INSERTO
20	3101494M1		2	BUSH	BAGUE BOCCOLA
21	3903071M91		1	SUPPORT	SUPPORT SUPPORTO
22	3903072M91		1	STEM	TIGE STELO
23	3009322X1	∅ 3 MM ◀▶ 18 MM	1	SPIROL PIN	GOUPILLE SPIRALE SPINA ESPANSIONE
24	1444351X1	∅ 13 MM	1	WASHER	RONDELLE RONDELLA
25	339287X1	M8x35	2	SCREW METRIC	VIS METRIQUE VITE METRICA
26	3903079M91		1	DRIVEN PLATE	PLAQUE GUIDE PIASTRA DI GUIDA

					LAGERUNG DISPOS.DE SOSTEN
					MUTTER METRISCH TUERCA METRICO
					SCHRAUBE METR TORNILLO METRICO
					SCHRAUBE METR TORNILLO METRICO
					SCHRAUBE TORNILLO
					SCHRAUBE TORNILLO
					MITNEHMERSCHE. DISCO RECEPTOR
					SCHEIBE METRISCH ARANDELA METRICO
					MUTTER METRISCH TUERCA METRICO
					SCHRAUBE UNF TORNILLO UNF
					SCHRAUBE METR TORNILLO METRICO
					LAGERUNG DISPOS.DE SOSTEN
					FEDER MUELLE
					PLATTE PLATO
					ROHR TUBO
					TASCHE BOLSA
					SCHRAUBE TORNILLO
					RAHMEN BASTIDOR
					EINSATZSTUECK INSERCION
					BUCHSE CASQUILLO
					LAGERUNG DISPOS.DE SOSTEN
					STIEL VASTAGO
					SPIRALSTIFT PASADOR ESPIRAL
					UNTERLEGSCHEIBE ARANDELA
					SCHRAUBE METR TORNILLO METRICO
					MITNEHMERSCHE. DISCO RECEPTOR

Seat **Siege** **Fahrersitz** **Sedile** **Asiento**	**Grammer** **Grammer** **Grammer** **Grammer** **Grammer**	**110-265**	**Air Ride Seat & Suspension** **Siege A Suspension Pneumatique** **Sits Mit Luft Aufhaengung** **Sedile Pneumatico** **Asiento Pneumatico**

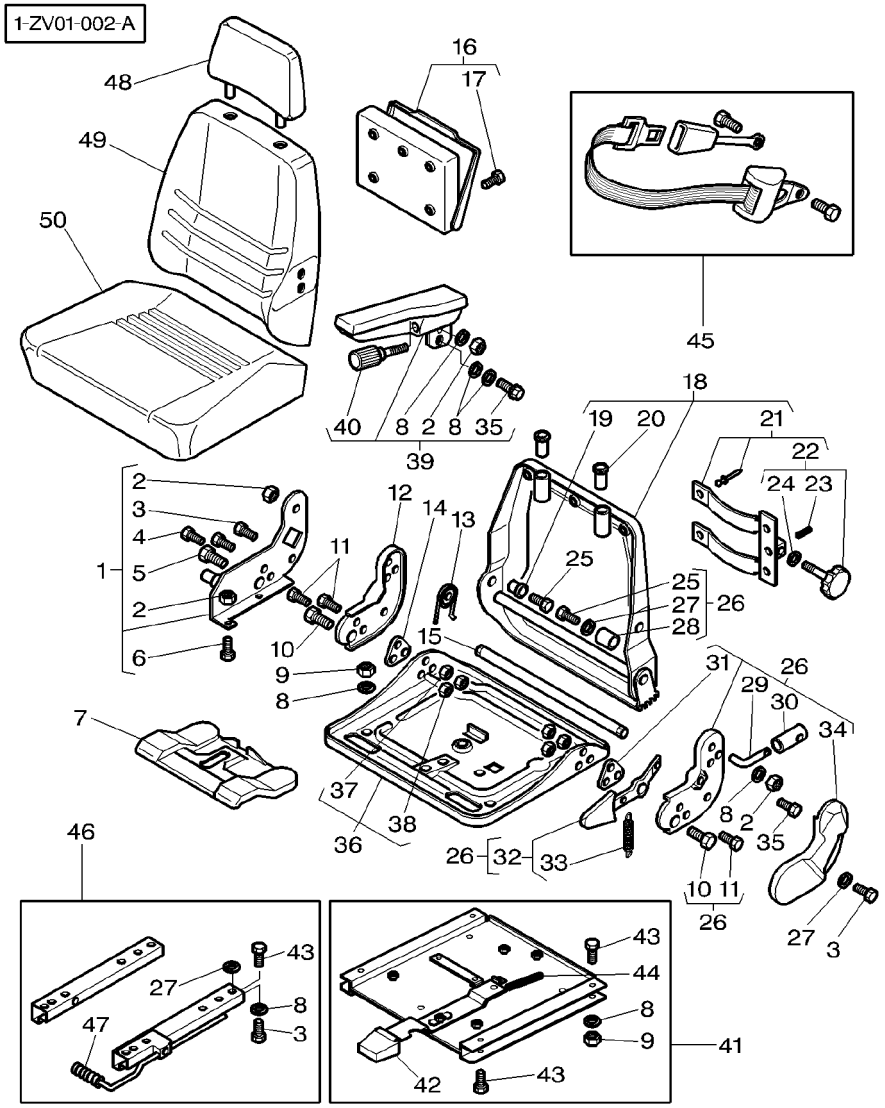

27	391039X1	∅ 8 MM	**5**	WASHER METRIC	RONDELLE METR. RONDELLA METRICO	SCHEIBE METRISCH ARANDELA METRICO
28	3903076M1		**1**	TUBE	TUBE TUBO	ROHR TUBO
29	3903080M1		**1**	LEVER	LEVIER LEVA	HEBEL PALANCA
30	3903081M1		**1**	HANDLE	POIGNEE MANIGLIA	HANDGRIFF MANETA
31	3903077M1		**1**	PLATE	PLAQUE PIASTRA	PLATTE PLATO
32	3903078M91		**1**	LEVER	LEVIER LEVA	HEBEL PALANCA
33	3105797M1		**1**	SPRING	RESSORT MOLLA	FEDER MUELLE
34	3903082M1		**1**	HOUSING	CARTER CARCASSA	GEHAEUSE ALOJAMIENTO
35	3101996M1	M8x16	**1**	SCREW SPECIAL	VIS SPECIALE VITE SPECIALE	SPEZIALSCHRAUBE TORNILLO ESPEC.
36	3903083M91		**1**	FRAME	BATI TELAIO	RAHMEN BASTIDOR
37	339169X1	M8	**4**	NUT METRIC	ECROU METRIQUE DADO METRICO	MUTTER METRISCH TUERCA METRICO
38	353428X1	∅ 7/16"-20	**2**	NUT UNF	ECROU UNF DADO UNF	MUTTER UNF TUERCA UNF
39	3903099M91		**1**	ARMREST	ACCOUDOIR BRACCIOLO	ARMLEHNE REPOSA BRAZOS
40	3903098M1		**1**	STEM	TIGE STELO	STIEL VASTAGO
41	3903100M91		**1**	PLATE	PLAQUE PIASTRA	PLATTE PLATO
42	3903102M1		**1**	HANDLE	POIGNEE MANIGLIA	HANDGRIFF MANETA
43	1441000X1	M8x16	**12**	SCREW METRIC	VIS METRIQUE VITE METRICA	SCHRAUBE METR TORNILLO METRICO
44	3903101M1		**1**	SPRING	RESSORT MOLLA	FEDER MUELLE
45	3903092M1		**1**	SAFETY BELT	CEINTURE DE PROT CINTURA DI SOST.	SICHERHEITSGURT CINTURA DE SEGUR
46	3903088M91		**1**	KIT, GUIDE	JEU GUIDE KIT GUIDA	FUEHRUNGSSATZ JUEGO DE GUIA
47	3903087M1		**1**	HANDLE	POIGNEE MANIGLIA	HANDGRIFF MANETA
48	3779612M1		**1**	HEAD REST	REPOSE TETE POGGIA TESTA	KOPFSTUETZE APOYA CABEZA
49	3903118M1		**1**	CUSHION	COUSSIN CUSCINO	POLSTER COJIN
50	3903117M1		**1**	CUSHION	COUSSIN CUSCINO	POLSTER COJIN

Seat **Siege** **Fahrersitz** **Sedile** **Asiento**	**Grammer** **Grammer** **Grammer** **Grammer** **Grammer**	**110-270**	**Air Pressure Seat With Automatic Adjustment** **Siege Pneumatique Avec Reglage Automatique** **Luftpolsterungsitz Mit Automatischeinstellung** **Sedile Pneumatico Con Aggiustatore Automatico** **Asiento Pneumatico Con Ajuste Automatico**

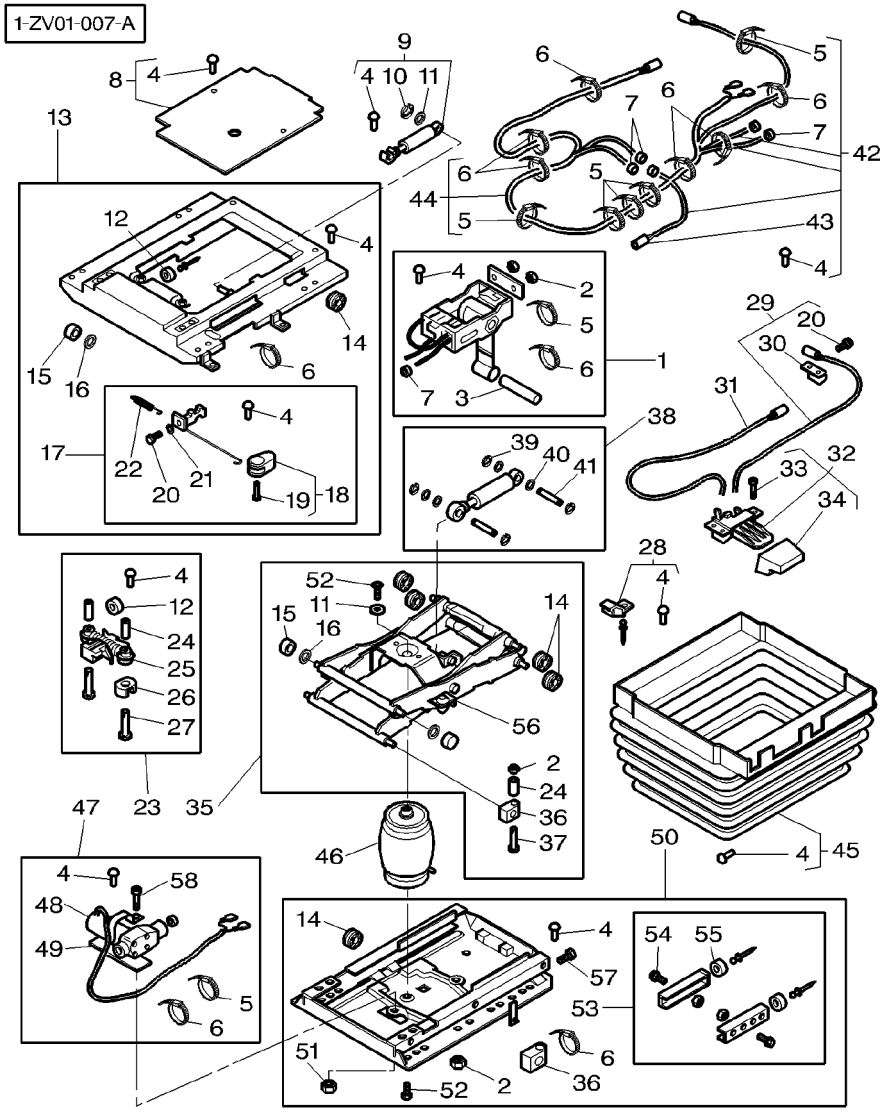

1	3903129M91		**1**	LEVER	LEVIER LEVA	HEBEL PALANCA
2	1441461X1	M8	**4**	NUT METRIC	ECROU METRIQUE DADO METRICO	MUTTER METRISCH TUERCA METRICO
3	3903130M1		**1**	CLEVIS PIN	AXE PERNO D'ATTACCO	SPLINTBOLZEN BULON CILINDRICO
4	1719896M1		**24**	PLUG	BOUCHON TAPPO	VERSCHL.STOPFEN TAPON
5	3903068M1	4,7x204 MM	**4**	TIE	ATTACHE TRAVERSA ATTACCO	KUPPL.STANGE BARRA DE ENLACE
6	3105397M1	2,5x102 MM	**5**	CABLE CLAMP	SERRE CABLE SERRA CAVO	KABELSCHELLE ABRAZADERA CABLE
7	3903052M1		**4**	OLIVE	OLIVE OLIVA	SCHNEIDRING OLIVA
8	3903037M91		**1**	HOUSING	CARTER CARCASSA	GEHAEUSE ALOJAMIENTO
9	3903039M91		**1**	SHOCK ABSORBER	AMORTISSEUR AMMORTIZZATORE	STOSSDAEMPFER AMORTIGUADOR
10	1441206X1	∅ 6 MM	**1**	LOCK WASHER	RONDELLE FREIN ROSETTA ELASTICA	FEDERRING ARANDELA GROWER
11	390972X1	∅ 8,4 MM	**2**	WASHER METRIC	RONDELLE METR. RONDELLA METRICO	SCHEIBE METRISCH ARANDELA METRICO
12	3903040M1		**1**	BUFFER	BUTOIR RESPINGENTE	PUFFER PARACHOQUES
13	3903132M91		**1**	SUSPENSION	SUSPENSION SOSPENSIONE	AUFHAENGUNG SUSPENSION
14	3903050M1		**4**	ROLLER	GALET RULLO	ROLLE RODILLO
15	3105382M1		**2**	BEARING NEEDLE	ROULEMENT AIGUIL CUSCINETTO AGHI	NADELLAGER COJINETA AGUJAS
16	3903048M1		**2**	RING	ANNEAU ANELLO	RING ARO
17	3903045M91		**1**	ROD LINK	BIELLETTE BISCOTTINO	VERBINDG.STANGE VARILLA ENGANCHE
18	3903180M91		**1**	PROTECTOR	PROTECTEUR PROTETTORE	SCHUTZ PROTECTOR
19	3903065M1	4x14	**1**	SCREW	VIS VITE	SCHRAUBE TORNILLO
20	3903064M1	3,5x12 MM	**2**	SCREW	VIS VITE	SCHRAUBE TORNILLO
21	339362X1	∅ 4,3 MM	**1**	WASHER	RONDELLE RONDELLA	UNTERLEGSCHEIBE ARANDELA
22	3903044M1		**2**	SPRING	RESSORT MOLLA	FEDER MUELLE
23	3903032M91		**1**	SHOCK ABSORBER	AMORTISSEUR AMMORTIZZATORE	STOSSDAEMPFER AMORTIGUADOR
24	3105404M1		**4**	TUBE	TUBE TUBO	ROHR TUBO
25	3903033M1		**2**	INSERT	DOUILLE INSERTO	EINSATZSTUECK INSERCION
26	3903034M1		**2**	BUFFER	BUTOIR RESPINGENTE	PUFFER PARACHOQUES

Seat	Grammer	110-270
Siege	Grammer	
Fahrersitz	Grammer	
Sedile	Grammer	
Asiento	Grammer	

Air Pressure Seat With Automatic Adjustment
Siege Pneumatique Avec Reglage Automatique
Luftpolsterungsitz Mit Automatischeinstellung
Sedile Pneumatico Con Aggiustatore Automatico
Asiento Pneumatico Con Ajuste Automatico

1-ZV01-007-A

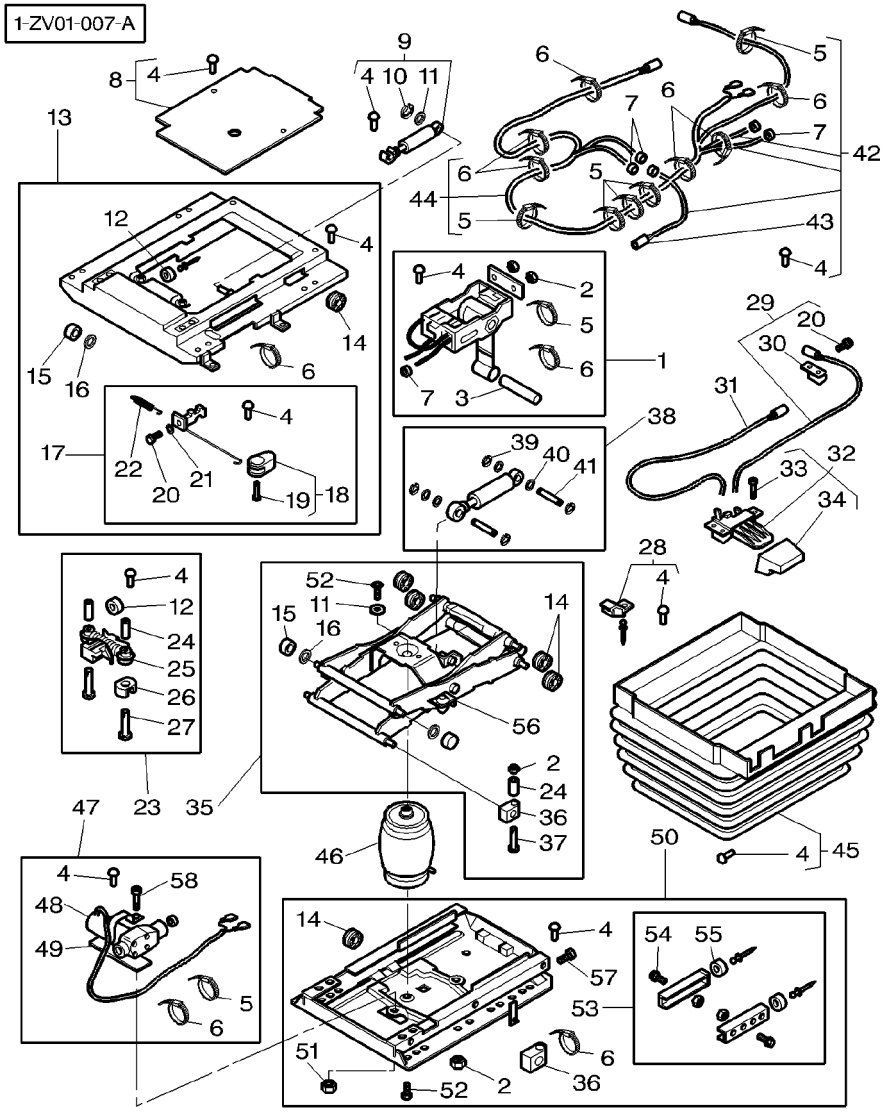

27	339287X1	M8x35	2	SCREW METRIC	VIS METRIQUE VITE METRICA	SCHRAUBE METR TORNILLO METRICO
28	3903036M1		2	STOP	BUTEE STOP	ANSCHLAG PARO
29	3903138M91		1	CABLE	CABLE CAVO	KABEL CABLE
30	3903136M1		1	SUPPORT	SUPPORT SUPPORTO	LAGERUNG DISPOS.DE SOSTEN
31	3903137M91		1	CABLE	CABLE CAVO	KABEL CABLE
32	3903164M91	⇔ 3903043M91	1	SELECTOR	SELECTEUR SELETTORE	SELEKTOR SELECTOR
33	3903063M1	M5x16	3	SCREW	VIS VITE	SCHRAUBE TORNILLO
34	3903042M1		1	HANDLE	POIGNEE MANIGLIA	HANDGRIFF MANETA
35	3903047M91		1	SUSPENSION	SUSPENSION SOSPENSIONE	AUFHAENGUNG SUSPENSION
36	3903049M1		2	BEARING CARRIER	PALIER CUSCINETTO SUPP-	LAGER-GEHAEUSE TEJUELO
37	3903066M1		2	SCREW	VIS VITE	SCHRAUBE TORNILLO
38	3903058M91		1	SHOCK ABSORBER	AMORTISSEUR AMMORTIZZATORE	STOSSDAEMPFER AMORTIGUADOR
39	390287X1		4	LOCK WASHER	RONDELLE FREIN ROSETTA ELASTICA	FEDERRING ARANDELA GROWER
40	3101663M1		4	WASHER	RONDELLE RONDELLA	UNTERLEGSCHEIBE ARANDELA
41	3903035M1		2	CLEVIS PIN	AXE PERNO D'ATTACCO	SPLINTBOLZEN BULON CILINDRICO
42	3903141M91		1	HYDR HOSE	FLEXIBLE TUBOFLEX IDRAUL	HYDR SCHLAUCH TUBO HIDRAULICO
43	3105395M1		2	HOSE CLIP	COLLIER DURITE STRINGITUBO	SCHLAUCHSCHELLE CLIP P.FLEXIBLE
44	3903140M91		1	CABLE	CABLE CAVO	KABEL CABLE
45	3903139M91		1	BELLOWS	SOUFFLET SOFFIETTO	FALTENBALG FUELLE
46	3903051M91		1	ACCUMULATOR	ACCUMULATEUR ACCUMULATORE	AKKUMULATOR ACUMULADOR
47	3903057M91		1	COMPRESSOR	COMPRESSEUR COMPRESSORE	KOMPRESSOR COMPRESOR
48	3903053M1		1	MUFF	CACHE MANICOTTO DEVIAN	FLANSCHMUFFE MANGUITO ACOPLAM
49	3903054M1		1	PLATE	PLAQUE PIASTRA	PLATTE PLATO
50	3903059M91		1	FIT PLATE SEAT	PLAQUE MONT SIEG FISSAGGIO SEDILE	SITZMONT.PLATTE PLACA FIJ.ASIENT
51	339169X1	M8	1	NUT METRIC	ECROU METRIQUE DADO METRICO	MUTTER METRISCH TUERCA METRICO
52	3903067M1	M8x20	2	SCREW	VIS VITE	SCHRAUBE TORNILLO

Seat Siege Fahrersitz Sedile Asiento	Grammer Grammer Grammer Grammer Grammer	**110-270**	**Air Pressure Seat With Automatic Adjustment** **Siege Pneumatique Avec Reglage Automatique** **Luftpolsterungsitz Mit Automatischeinstellung** **Sedile Pneumatico Con Aggiustatore Automatico** **Asiento Pneumatico Con Ajuste Automatico**

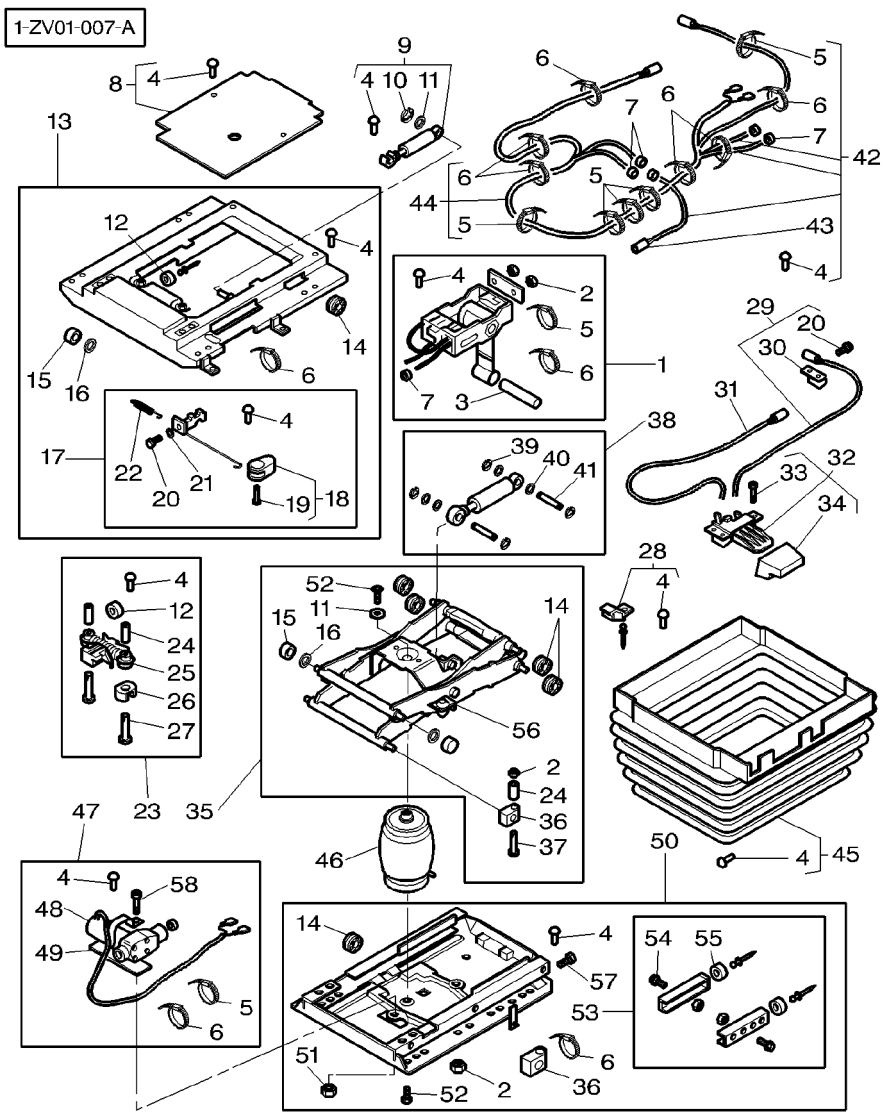

53	3903062M1		1	STOP	BUTEE STOP	ANSCHLAG PARO
54	3101996M1	M8x16	2	SCREW SPECIAL	VIS SPECIALE VITE SPECIALE	SPEZIALSCHRAUBE TORNILLO ESPEC.
55	3102401M1		2	BUFFER	BUTOIR RESPINGENTE	PUFFER PARACHOQUES
56	1719867M1		2	PROTECTOR	PROTECTEUR PROTETTORE	SCHUTZ PROTECTOR
57	3000926X1	M5x10	1	SCREW	VIS VITE	SCHRAUBE TORNILLO
58	3001414X1	M8x12	1	SCREW METRIC	VIS METRIQUE VITE METRICA	SCHRAUBE METR TORNILLO METRICO
59	3903135M91	[AB]	1	KIT, REPAIR	JEU REPARATION KIT RIPARAZIONE	REPARATURSATZ JUEGO REPARACION

[A] INCLUDE ITEM 2/4/5/6/11/12/14/15/16/24/25/ 26/36/51/52/53/56/58
COMPREND L'ITEM 2/4/5/6/11/12/14/15/16/24/25/ 26/36/51/52/53/56/58
BEINHALTET POS NR. 2/4/5/6/11/12/14/15/16/24/25/ 26/36/51/52/53/56/58
INCLUDE IL NUMERO 2/4/5/6/11/12/14/15/16/24/25/ 26/36/51/52/53/56/58
INCLUYE EL NO 2/4/5/6/11/12/14/15/16/24/25/ 26/36/51/52/53/56/58

[B] NO ILLUSTRATED
NON ILLUSTRE
NICHT ABGEBILDET
NO ILLUSTRADO
NO ILLUSTRADED

Seat	Grammer	110-275	Air Pressure Seat With Manual Adjustment
Siege	Grammer		Siege Pneumatique Avec Reglage Manuel
Fahrersitz	Grammer		Luftpolsterungsitz Mit Handschalteinstellung
Sedile	Grammer		Sedile Pneumatico Con Aggiustatore Manuale
Asiento	Grammer		Asiento Pneumatico Con Ajuste Manual

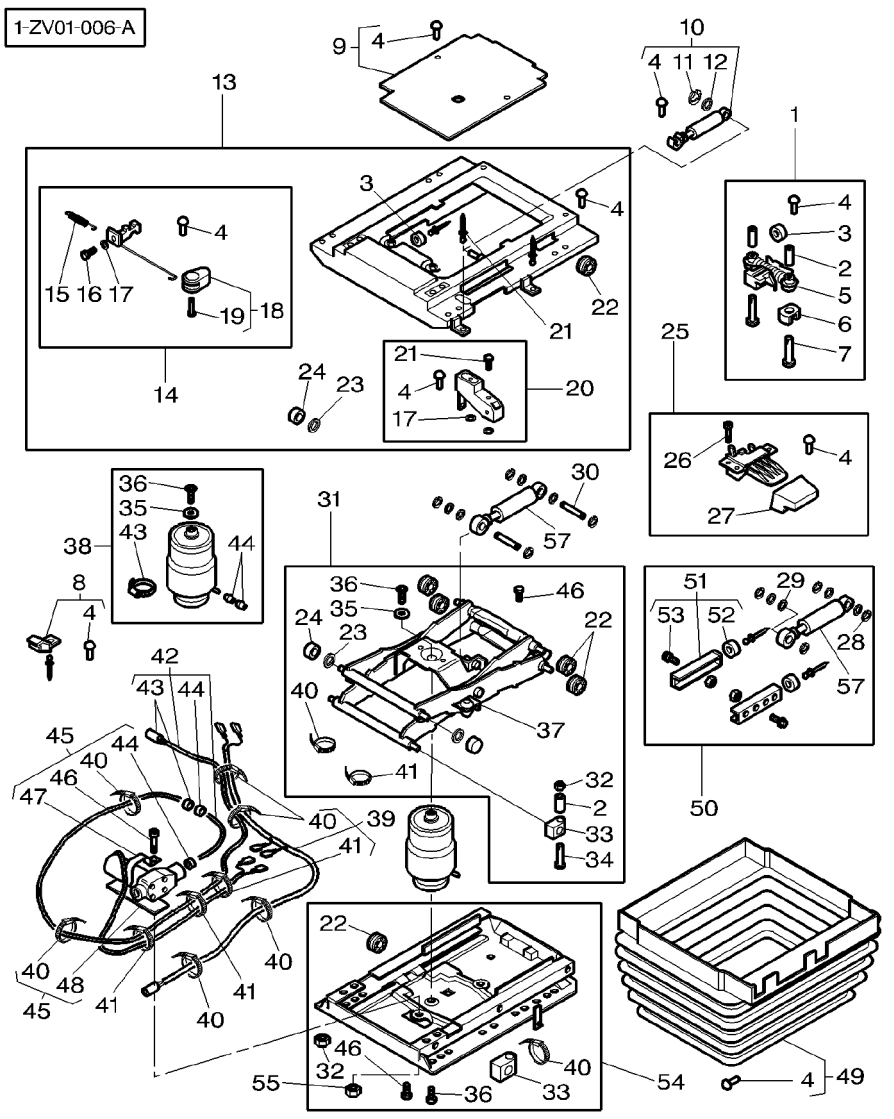

1	3903032M91		1	SHOCK ABSORBER	AMORTISSEUR AMMORTIZZATORE	STOSSDAEMPFER AMORTIGUADOR
2	3105404M1		4	TUBE	TUBE TUBO	ROHR TUBO
3	3903040M1		1	BUFFER	BUTOIR RESPINGENTE	PUFFER PARACHOQUES
4	1719896M1		24	PLUG	BOUCHON TAPPO	VERSCHL.STOPFEN TAPON
5	3903033M1		2	INSERT	DOUILLE INSERTO	EINSATZSTUECK INSERCION
6	3903034M1		1	BUFFER	BUTOIR RESPINGENTE	PUFFER PARACHOQUES
7	339287X1	M8x35	2	SCREW METRIC	VIS METRIQUE VITE METRICA	SCHRAUBE METR TORNILLO METRICO
8	3903036M1		2	STOP	BUTEE STOP	ANSCHLAG PARO
9	3903037M91		1	HOUSING	CARTER CARCASSA	GEHAEUSE ALOJAMIENTO
10	3903039M91	M8	1	SHOCK ABSORBER	AMORTISSEUR AMMORTIZZATORE	STOSSDAEMPFER AMORTIGUADOR
11	1441206X1	∅ 6 MM	1	LOCK WASHER	RONDELLE FREIN ROSETTA ELASTICA	FEDERRING ARANDELA GROWER
12	390972X1	∅ 8,4 MM	2	WASHER METRIC	RONDELLE METR. RONDELLA METRICO	SCHEIBE METRISCH ARANDELA METRICO
13	3903038M91		1	FIT PLATE SEAT	PLAQUE MONT SIEG FISSAGGIO SEDILE	SITZMONT.PLATTE PLACA FIJ.ASIENT
14	3903045M91		1	ROD LINK	BIELLETTE BISCOTTINO	VERBINDG.STANGE VARILLA ENGANCHE
15	3903044M1		2	SPRING	RESSORT MOLLA	FEDER MUELLE
16	3903064M1	∅ 3,5 MM ◀▶ 12 MM	1	SCREW	VIS VITE	SCHRAUBE TORNILLO
17	339362X1	∅ 4 MM	3	WASHER	RONDELLE RONDELLA	UNTERLEGSCHEIBE ARANDELA
18	3903046M91		1	HANDLE	POIGNEE MANIGLIA	HANDGRIFF MANETA
19	3903065M1	4x14	1	SCREW	VIS VITE	SCHRAUBE TORNILLO
20	3903041M91		1	PARTS PACK	JEU PIECES PACCO RICAMBI	SATZ TEILE PAQUETE PIEZAS
21	3103289M1	4x12	2	RIVET	RIVET RIVETTO	NIET REMACHE
22	3903050M1		4	ROLLER	GALET RULLO	ROLLE RODILLO
23	3903048M1		2	RING	ANNEAU ANELLO	RING ARO
24	3105382M1		2	BEARING NEEDLE	ROULEMENT AIGUIL CUSCINETTO AGHI	NADELLAGER COJINETA AGUJAS
25	3903164M91	⇔ 3903043M91	1	SELECTOR	SELECTEUR SELETTORE	SELEKTOR SELECTOR
26	3903063M1	5x16	3	SCREW	VIS VITE	SCHRAUBE TORNILLO

Seat Siege Fahrersitz Sedile Asiento	Grammer Grammer Grammer Grammer Grammer	**110-275**	**Air Pressure Seat With Manual Adjustment** **Siege Pneumatique Avec Reglage Manuel** **Luftpolsterungsitz Mit Handschalteinstellung** **Sedile Pneumatico Con Aggiustatore Manuale** **Asiento Pneumatico Con Ajuste Manual**

1-ZV01-006-A

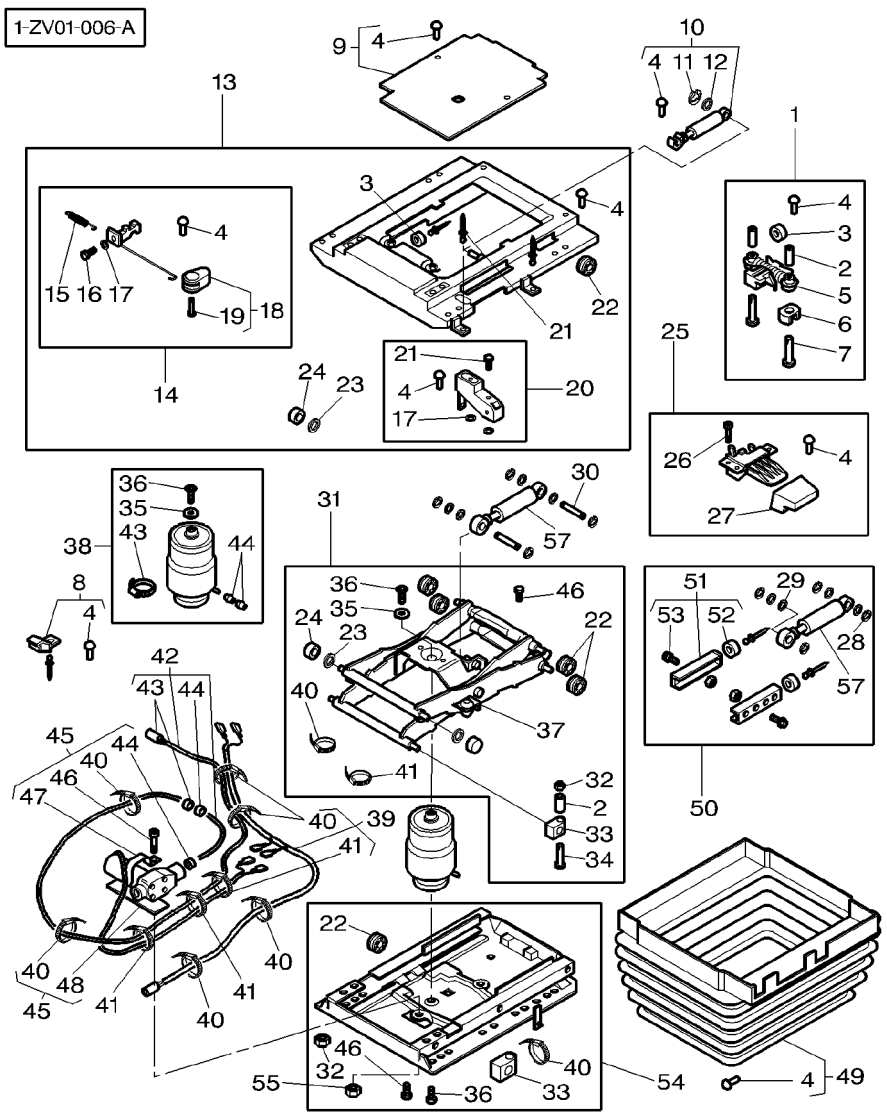

27	3903042M1		**1**	HANDLE	POIGNEE MANIGLIA	HANDGRIFF MANETA
28	390287X1	∅ 10 MM	**4**	LOCK WASHER	RONDELLE FREIN ROSETTA ELASTICA	FEDERRING ARANDELA GROWER
29	3101663M1	∅ 13 MM	**4**	WASHER	RONDELLE RONDELLA	UNTERLEGSCHEIBE ARANDELA
30	3903035M1		**2**	CLEVIS PIN	AXE PERNO D'ATTACCO	SPLINTBOLZEN BULON CILINDRICO
31	3903047M91		**1**	SUSPENSION	SUSPENSION SOSPENSIONE	AUFHAENGUNG SUSPENSION
32	1441461X1	M8	**2**	NUT METRIC	ECROU METRIQUE DADO METRICO	MUTTER METRISCH TUERCA METRICO
33	3903049M1		**2**	BEARING CARRIER	PALIER CUSCINETTO SUPP-	LAGER-GEHAEUSE TEJUELO
34	3903066M1		**2**	SCREW	VIS VITE	SCHRAUBE TORNILLO
35	390972X1	∅ 8,4 MM	**2**	WASHER METRIC	RONDELLE METR. RONDELLA METRICO	SCHEIBE METRISCH ARANDELA METRICO
36	3903067M1	8x20	**2**	SCREW	VIS VITE	SCHRAUBE TORNILLO
37	1719867M1		**2**	PROTECTOR	PROTECTEUR PROTETTORE	SCHUTZ PROTECTOR
38	3903051M91		**1**	ACCUMULATOR	ACCUMULATEUR ACCUMULATORE	AKKUMULATOR ACUMULADOR
39	3903056M91		**1**	CABLE	CABLE CAVO	KABEL CABLE
40	3105397M1		**7**	CABLE CLAMP	SERRE CABLE SERRA CAVO	KABELSCHELLE ABRAZADERA CABLE
41	3903068M1		**4**	TIE	ATTACHE TRAVERSA ATTACCO	KUPPL.STANGE BARRA DE ENLACE
42	3903055M91		**1**	PRESSURE VALVE	VALVE VALVOLA PRESSION	DRUCKVENTIL VALVULA PRESION
43	3903052M1		**2**	OLIVE	OLIVE OLIVA	SCHNEIDRING OLIVA
44	3105395M1		**2**	HOSE CLIP	COLLIER DURITE STRINGITUBO	SCHLAUCHSCHELLE CLIP P.FLEXIBLE
45	3903057M91		**1**	COMPRESSOR	COMPRESSEUR COMPRESSORE	KOMPRESSOR COMPRESOR
46	3001414X1	M8x12	**1**	SCREW METRIC	VIS METRIQUE VITE METRICA	SCHRAUBE METR TORNILLO METRICO
47	3903053M1		**1**	MUFF	CACHE MANICOTTO DEVIAN	FLANSCHMUFFE MANGUITO ACOPLAM
48	3903054M1		**1**	PLATE	PLAQUE PIASTRA	PLATTE PLATO
49	3903060M91		**1**	BELLOWS	SOUFFLET SOFFIETTO	FALTENBALG FUELLE
50	3903058M91		**1**	SHOCK ABSORBER	AMORTISSEUR AMMORTIZZATORE	STOSSDAEMPFER AMORTIGUADOR
51	3903062M1		**1**	STOP	BUTEE STOP	ANSCHLAG PARO
52	3102401M1		**2**	BUFFER	BUTOIR RESPINGENTE	PUFFER PARACHOQUES

Seat	Grammer	110-275	Air Pressure Seat With Manual Adjustment
Siege	Grammer		Siege Pneumatique Avec Reglage Manuel
Fahrersitz	Grammer		Luftpolsterungsitz Mit Handschalteinstellung
Sedile	Grammer		Sedile Pneumatico Con Aggiustatore Manuale
Asiento	Grammer		Asiento Pneumatico Con Ajuste Manual

1-ZV01-006-A

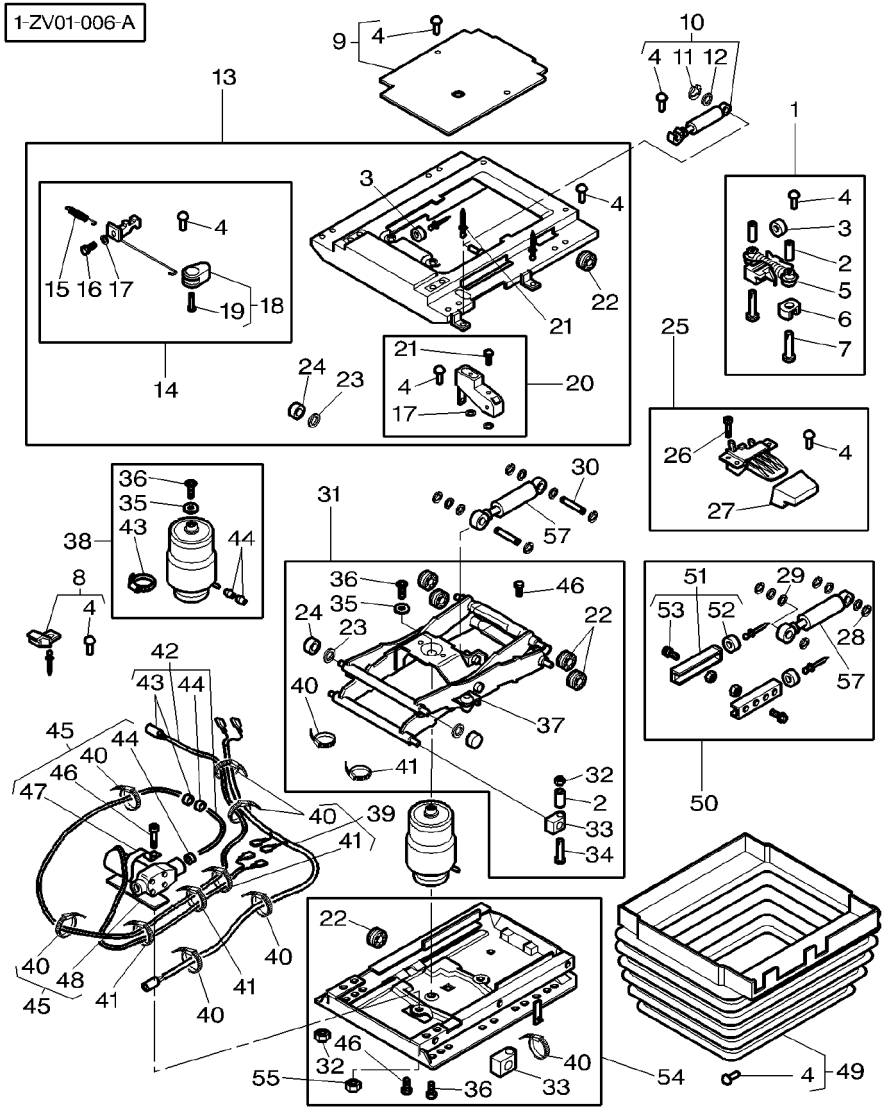

53	3101996M1	M8x16	**2**	SCREW SPECIAL	VIS SPECIALE VITE SPECIALE SPEZIALSCHRAUBE TORNILLO ESPEC.
54	3903059M91		**1**	FIT PLATE SEAT	PLAQUE MONT SIEG FISSAGGIO SEDILE SITZMONT.PLATTE PLACA FIJ.ASIENT
55	339169X1	M8	**2**	NUT METRIC	ECROU METRIQUE DADO METRICO MUTTER METRISCH TUERCA METRICO
56	3903061M91	[AB]	**1**	KIT, REPAIR	JEU REPARATION KIT RIPARAZIONE REPARATURSATZ JUEGO REPARACION
57		REF 50	**1**	RAM	VERIN CILINDRO IDRAUL. HYDR.ZYLINDER ARIETE

[A] INCLUDE ITEM 2/3/4/6/22/23/24/33/35/36/37/ 40/41/44/46/51
COMPREND L'ITEM 2/3/4/6/22/23/24/33/35/36/37/ 40/41/44/46/51
BEINHALTET POS NR. 2/3/4/6/22/23/24/33/35/36/37/ 40/41/44/46/51
INCLUDE IL NUMERO 2/3/4/6/22/23/24/33/35/36/37/ 40/41/44/46/51
INCLUYE EL NO 2/3/4/6/22/23/24/33/35/36/37/ 40/41/44/46/51

[B] NO ILLUSTRATED
NON ILLUSTRE
NICHT ABGEBILDET
NO ILLUSTRADO
NO ILLUSTRADED

Main Seat	Platform
Siege Principal	Plateforme
Fahrersitz	Plattform
Sedile	Piattaforma
Asiento	Plataforma

110-280

1-ZV08-001-A

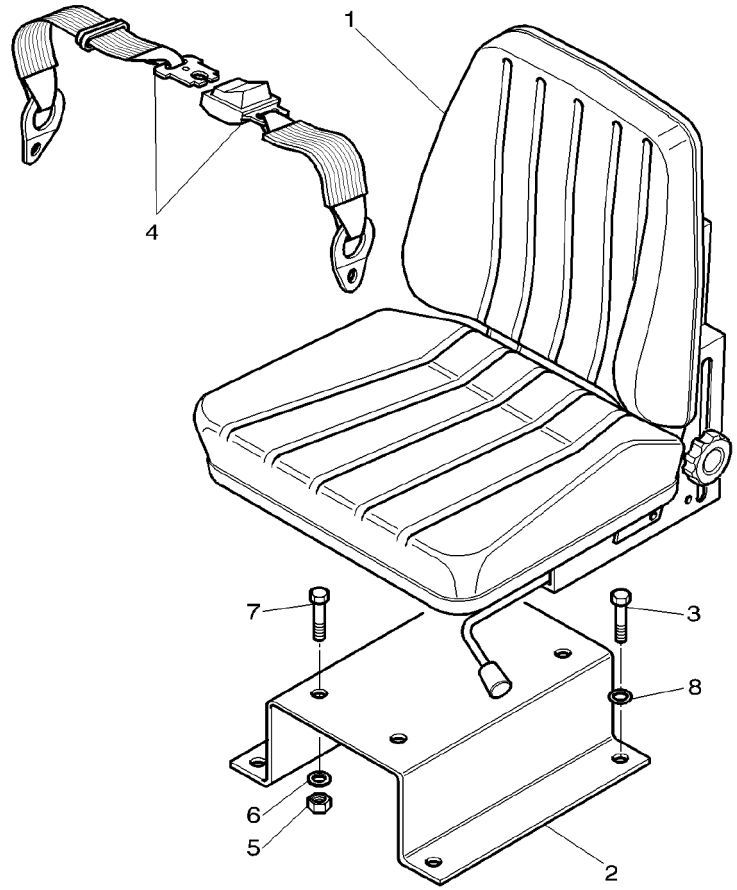

1	3698067M91		**1**	SEAT	SIEGE SEDILE	SITZ ASIENTO
2	3778390M2		**1**	SUPPORT	SUPPORT SUPPORTO	LAGERUNG DISPOS.DE SOSTEN
3	1441000X1	M8X16MM	**4**	SCREW METRIC	VIS METRIQUE VITE METRICA	SCHRAUBE METR TORNILLO METRICO
4	3772121M91		**1**	SAFETY BELT	CEINTURE DE PROT CINTURA DI SOST.	SICHERHEITSGURT CINTURA DE SEGUR
5	3009693X1		**4**	NUT METRIC	ECROU METRIQUE DADO METRICO	MUTTER METRISCH TUERCA METRICO
6	385362X1		**4**	WASHER METRIC	RONDELLE METR. RONDELLA METRICO	SCHEIBE METRISCH ARANDELA METRICO
7	339081X1	M10X20MM	**4**	SCREW METRIC	VIS METRIQUE VITE METRICA	SCHRAUBE METR TORNILLO METRICO
8	390972X1		**4**	WASHER METRIC	RONDELLE METR. RONDELLA METRICO	SCHEIBE METRISCH ARANDELA METRICO

Main Seat	Platform
Siege Principal	Plateforme
Fahrersitz	Plattform
Sedile	Piattaforma
Asiento	Plataforma

110-285

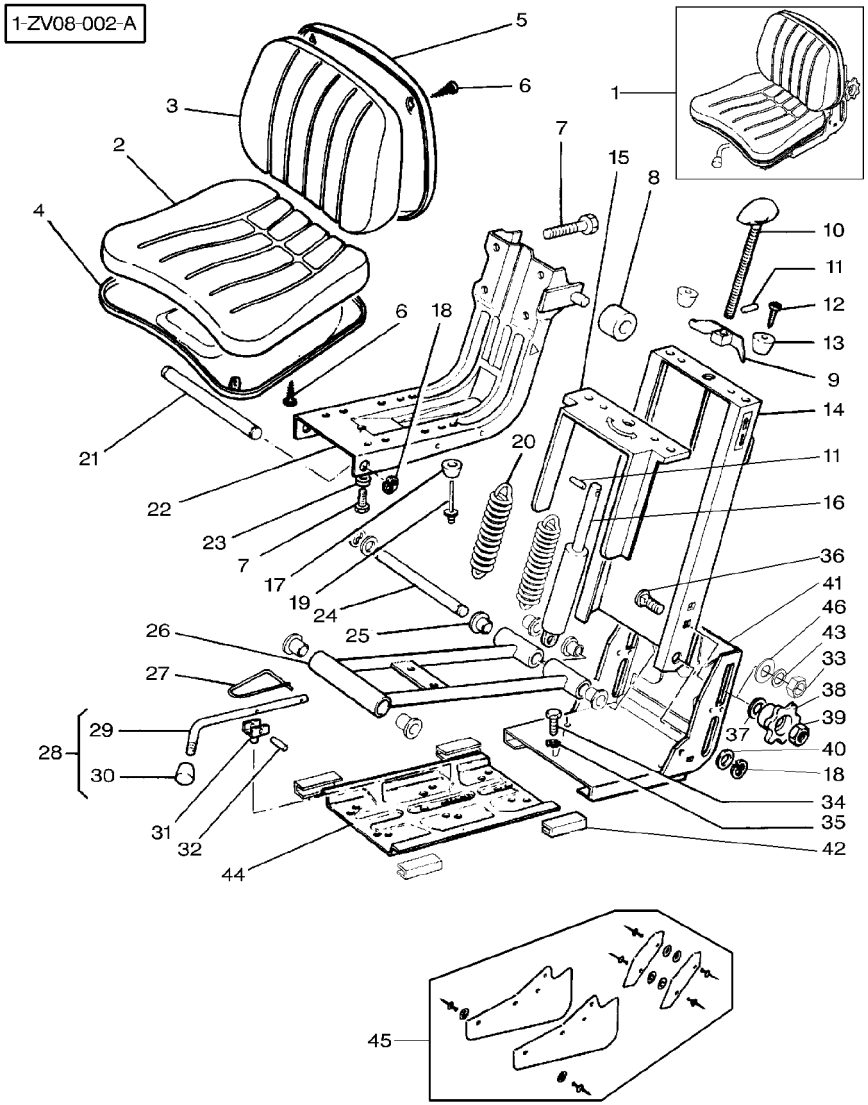

1	3698067M91		**1**	SEAT	SIEGE SEDILE	SITZ ASIENTO
2	3107224M1	1	**1**	CUSHION	COUSSIN CUSCINO	POLSTER COJIN
3	3107223M1	1	**1**	CUSHION	COUSSIN CUSCINO	POLSTER COJIN
4	3107226M1	1	**1**	SEAT PAN	CUVETTE SIEGE COPRISEDILE	SITZSCHALE CJTO.MARCO ASIEN
5	3107225M1	1	**1**	BRACKET	SUPPORT FIXATION SUPPORTO FISSAGG	HALTEARM SOPORTE
6	3107227M1	1	**8**	SCREW	VIS VITE	SCHRAUBE TORNILLO
7	339228X1	1	**8**	SCREW METRIC	VIS METRIQUE VITE METRICA	SCHRAUBE METR TORNILLO METRICO
8	3102150M1	1	**2**	ROLLER	GALET RULLO	ROLLE RODILLO
9	3105100M1	1	**1**	HOLDER	PIECE SUPPORT SUPPORTO DI BASE	HALTER SUJETADOR
10	3102390M1	1	**1**	ADJUSTER	REGLEUR CILINDRO SOLLEV.	EINSTELLVORR AJUSTADOR
11	3009052X1	1	**1**	RIVET	RIVET RIVETTO	NIET REMACHE
12	3001254X1	1	**2**	SELF TAP SCREWS	VIS AUTO TARAUD KITAUTOBLOCCANTE	SCHNEIDSCHRAUBEN TORN.AUTOROSC.
13	3102394M1	1	**2**	BUMPER	PARE CHOC PARAURTI	STOSSFAENGER PARAGOLPES
14	3102794M1	1	**1**	HOUSING	CARTER CARCASSA	GEHAEUSE ALOJAMIENTO
15	3102137M1	1	**1**	COVER	COUVERCLE COPERCHIO	DECKEL CUBIERTA
16	3102391M1	1	**1**	SHOCK ABSORBER	AMORTISSEUR AMMORTIZZATORE	STOSSDAEMPFER AMORTIGUADOR
17	3102401M1	1	**2**	BUFFER	BUTOIR RESPINGENTE	PUFFER PARACHOQUES
18	391415X1	1	**4**	CIRCLIP	SEGMENT D ARRET ANELLO D'ARRESTO	SICHERUNGSRING CIRCULITO
19	3102396M1	1	**2**	RIVET	RIVET RIVETTO	NIET REMACHE
20	3102393M1	1	**2**	SPRING	RESSORT MOLLA	FEDER MUELLE
21	3102133M1	1	**1**	PIN	GOUPILLE PERNO	BOLZEN PASADOR
22	3102399M1	1	**1**	SUPPORT	SUPPORT SUPPORTO	LAGERUNG DISPOS.DE SOSTEN
23	390972X1	1	**2**	WASHER METRIC	RONDELLE METR. RONDELLA METRICO	SCHEIBE METRISCH ARANDELA METRICO
24	3102131M1	1	**1**	PIN	GOUPILLE PERNO	BOLZEN PASADOR
25	1719857M1	1	**6**	BUSH	BAGUE BOCCOLA	BUCHSE CASQUILLO
26	3102397M1	1	**1**	FRAME	BATI TELAIO	RAHMEN BASTIDOR

Main Seat
Siege Principal
Fahrersitz
Sedile
Asiento

Platform
Plateforme
Plattform
Piattaforma
Plataforma

110-285

1-ZV08-002-A

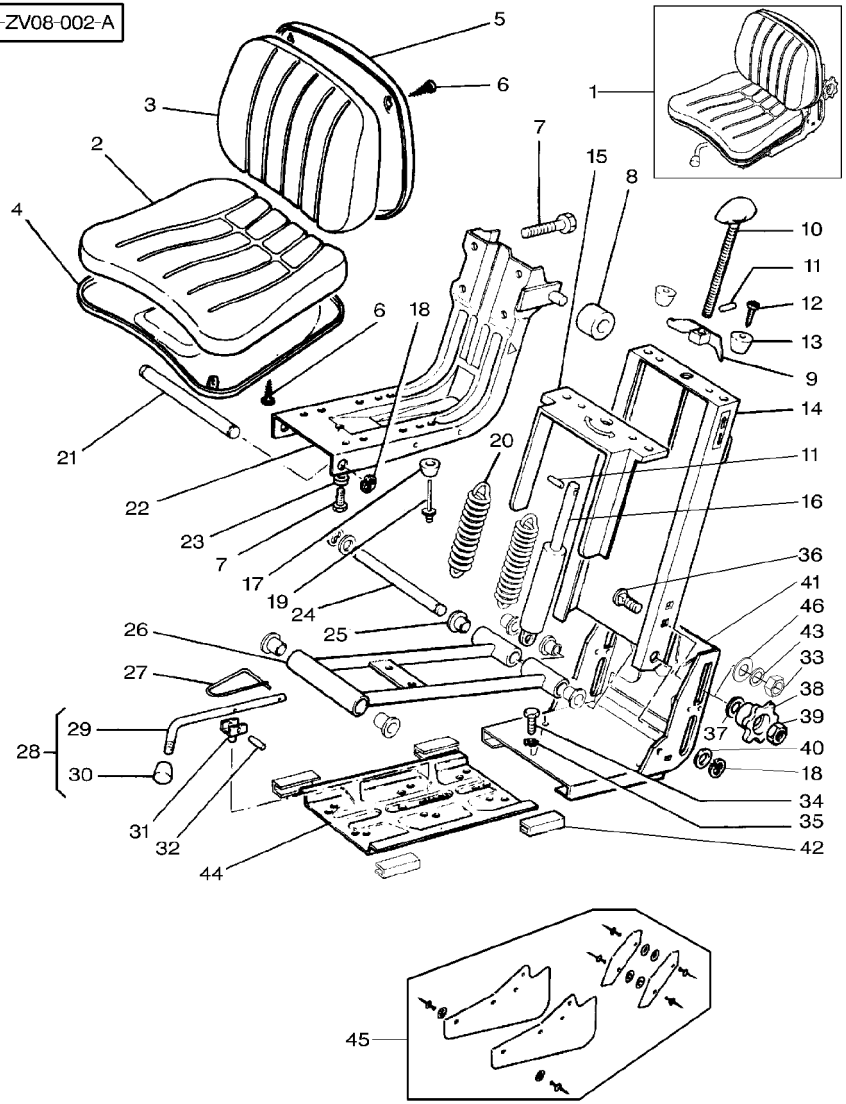

27	3102387M1	1	**1**	SPRING	RESSORT MOLLA	FEDER MUELLE
28	3102400M91	1	**1**	LEVER	LEVIER LEVA	HEBEL PALANCA
29	3107228M1	28	**1**	LEVER	LEVIER LEVA	HEBEL PALANCA
30	3102139M1	28	**1**	KNOB	POMMEAU POMELLO	KNOPF POMO
31	3102141M1	1	**1**	STRAP	PATTE CORREGGIA	LASCHE FAJA
32	338334X1	1	**1**	PIN	GOUPILLE PERNO	BOLZEN PASADOR
33	353431X1	1	**2**	NUT UNF	ECROU UNF DADO UNF	MUTTER UNF TUERCA UNF
34	339124X1	1	**1**	SCREW METRIC	VIS METRIQUE VITE METRICA	SCHRAUBE METR TORNILLO METRICO
35	339374X1	1	**1**	LOCK WASHER	RONDELLE FREIN ROSETTA ELASTICA	FEDERRING ARANDELA GROWER
36	353807X1	1 3/8 24X22	**2**	SCREW UNF	VIS UNF VITE UNF	SCHRAUBE UNF TORNILLO UNF
37	390597X1	1	**2**	WASHER METRIC	RONDELLE METR. RONDELLA METRICO	SCHEIBE METRISCH ARANDELA METRICO
38	3102130M1	1	**2**	BUTTON	BOUTON PULSANTE	KNOPFTASTE PULSADOR
39	390881X1	1	**2**	NUT METRIC	ECROU METRIQUE DADO METRICO	MUTTER METRISCH TUERCA METRICO
40	390735X1	1	**2**	WASHER	RONDELLE RONDELLA	UNTERLEGSCHEIBE ARANDELA
41	3102389M1	1	**1**	ADJUSTER	REGLEUR CILINDRO SOLLEV.	EINSTELLVORR AJUSTADOR
42	3102136M1	1	**4**	STRAP	PATTE CORREGGIA	LASCHE FAJA
43	390734X1	1	**2**	WASHER METRIC	RONDELLE METR. RONDELLA METRICO	SCHEIBE METRISCH ARANDELA METRICO
44	3102292M2	1	**1**	PLATE	PLAQUE PIASTRA	PLATTE PLATO
45	3900295M91	1	**1**	KIT, FINGERGUARD	JEU PROTEGEDOIGT KIT RIPARADITA	SATZ FINGERSCHUT J.PROTEC.DEDOS
46	339376X1	1	**2**	LOCK WASHER	RONDELLE FREIN ROSETTA ELASTICA	FEDERRING ARANDELA GROWER

Seat Belt
Ceinture De Securite
Sicherheitsgurt
Cintura Sicurezza
Cinturon De Seguridad

110-290

1-ZZ02-001-B

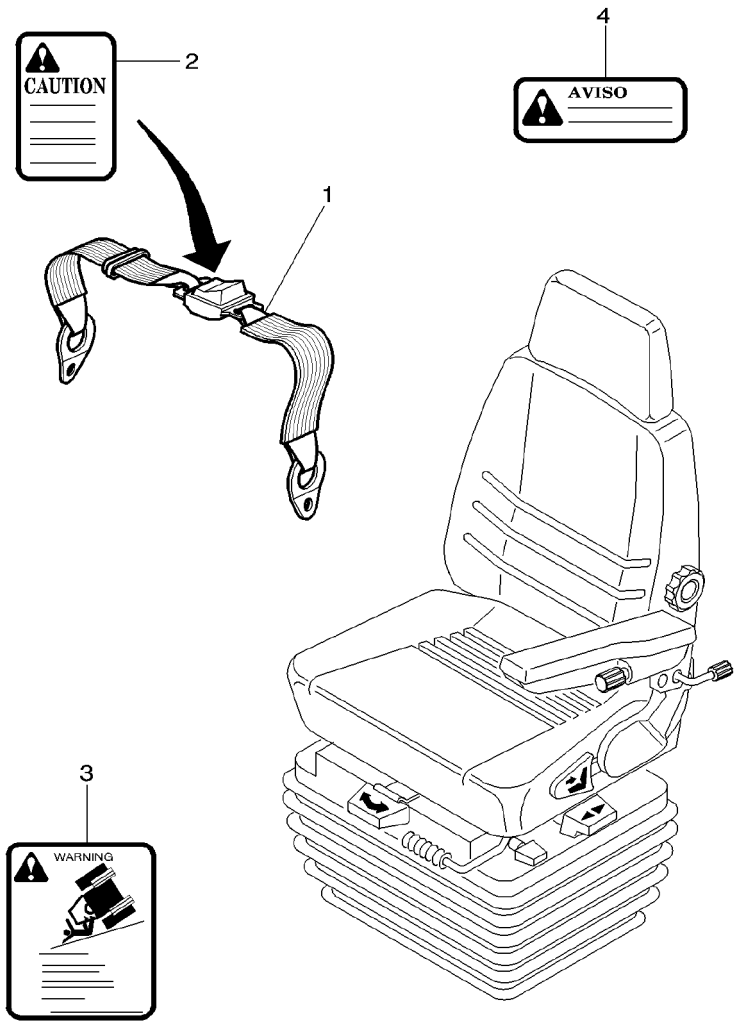

1	3772121M91		**1**	SAFETY BELT	CEINTURE DE PROT CINTURA DI SOST.	SICHERHEITSGURT CINTURA DE SEGUR
2	523784M3	(GB)	**1**	DECAL	DECALCOMANIE DECALCOMANIA	AUFKLEBER CALCOMANIA
2	3597443M1	(D)	**1**	DECAL	DECALCOMANIE DECALCOMANIA	AUFKLEBER CALCOMANIA
2	3597445M1	[A]	**1**	DECAL	DECALCOMANIE DECALCOMANIA	AUFKLEBER CALCOMANIA
3	3760678M1	(GB)	**1**	DECAL	DECALCOMANIE DECALCOMANIA	AUFKLEBER CALCOMANIA
4	3597454M1	[A]	**1**	DECAL	DECALCOMANIE DECALCOMANIA	AUFKLEBER CALCOMANIA

[A] SPANISH
ESPAGNOL
SPANISCHE
SPAGNOLO
ESPANOL

Secondary Seat
Siege Secondaire
Beifahrersitz
Sedile Secondario
Asiento

110-295

1-ZV03-001-C

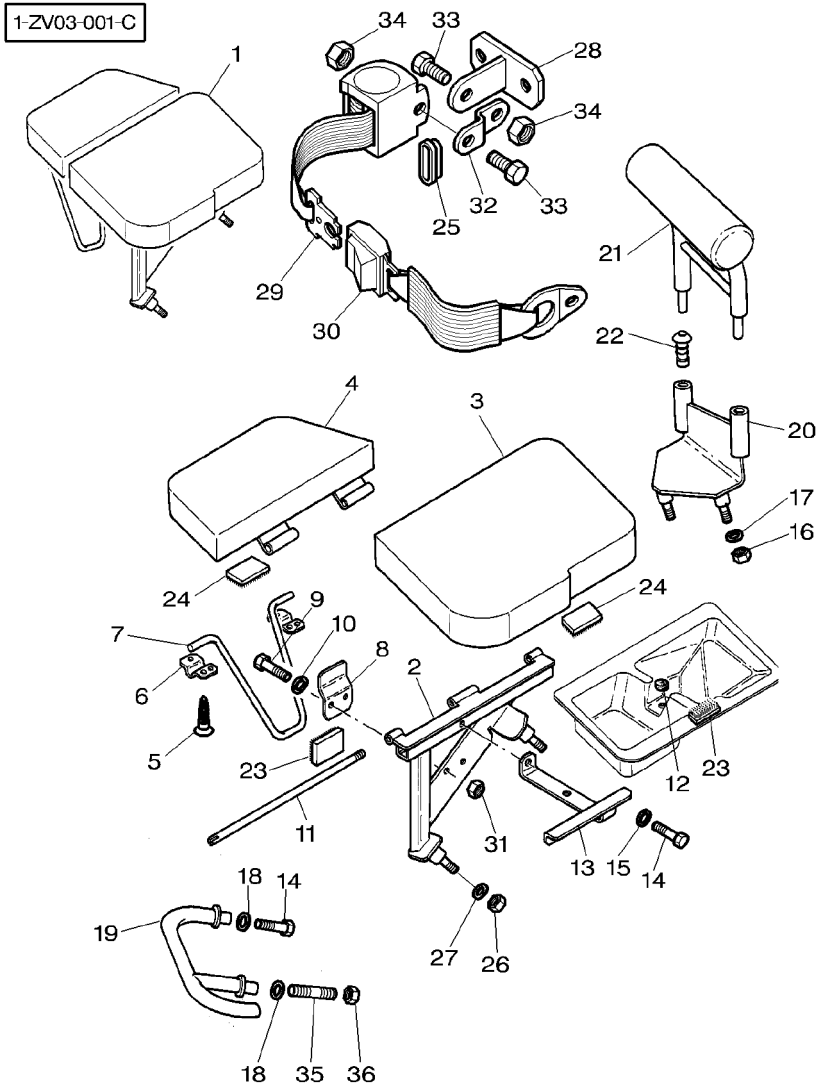

1	3779641M92	GREY	**1**	SEAT	SIEGE SEDILE	SITZ ASIENTO
2	3712855M3	1	**1**	SUPPORT	SUPPORT SUPPORTO	LAGERUNG DISPOS.DE SOSTEN
3	3779636M1	1 GREY	**1**	CUSHION	COUSSIN CUSCINO	POLSTER COJIN
4	3779634M1	1 GREY	**1**	CUSHION	COUSSIN CUSCINO	POLSTER COJIN
5	3713140M1	1	**6**	SCREW	VIS VITE	SCHRAUBE TORNILLO
6	3712859M1	1	**2**	BRIDLE	BRIDE BRIGLIA	SPANNBAND BRIDA
7	3712861M1	1	**1**	STAND	BEQUILLE CAVALLETTO	STUETZE CABALLETE
8	3712856M1		**1**	HOOK	CROCHET GANCIO	HAKEN GANCHO
9	339804X1	M6X25	**2**	SCREW METRIC	VIS METRIQUE VITE METRICA	SCHRAUBE METR TORNILLO METRICO
10	390971X1		**2**	WASHER METRIC	RONDELLE METR. RONDELLA METRICO	SCHEIBE METRISCH ARANDELA METRICO
11	3712899M1	1	**1**	STEM	TIGE STELO	STIEL VASTAGO
12	3616277M1		**1**	HELMET	CAPUCHON CASCO	SCHUTZHELM CASCO
13	3712860M1	1	**1**	ANGLE	EQUERRE ANGOLO	WINKEL ANGULO
14	339124X1	➡| H308001 M8X16	**2**	SCREW METRIC	VIS METRIQUE VITE METRICA	SCHRAUBE METR TORNILLO METRICO
15	390972X1		**1**	WASHER METRIC	RONDELLE METR. RONDELLA METRICO	SCHEIBE METRISCH ARANDELA METRICO
16	394367X1	M8X35	**3**	LOCKNUT	ECROU BLOCAGE AUTOBLOCCANTE	FLACHMUTTER CONTRATUERCA
17	390972X1	∅ 8MM	**3**	WASHER METRIC	RONDELLE METR. RONDELLA METRICO	SCHEIBE METRISCH ARANDELA METRICO
18	3010467X1		**2**	WASHER	RONDELLE RONDELLA	UNTERLEGSCHEIBE ARANDELA
19	3713139M1		**1**	FOOT REST	REPOSE PIED SUPPORTO PIEDE	FUSSTUETZE REPOSAPIES
20	3712857M2		**1**	SUPPORT	SUPPORT SUPPORTO	LAGERUNG DISPOS.DE SOSTEN
21	3779638M1	GREY	**1**	BACK REST	DOSSIER SCHIENALE	RUECKENLEHNE RESPALDO
22	3713138M1		**2**	GUIDE BUSH	BAGUE GUIDE BUSSOLA GUIDA	FUEHRUNGSBUCHSE CASQUILLO GUIA
23	3714101M1		**2**	BAND	BANDE NASTRO	BAND BANDA
24	3714102M1		**2**	BAND	BANDE NASTRO	BAND BANDA
25	3715170M1		**1**	TAP	OBTURATEUR TAPPO*	HAHN GRIFO
26	394367X1		**2**	LOCKNUT	ECROU BLOCAGE AUTOBLOCCANTE	FLACHMUTTER CONTRATUERCA

Secondary Seat
Siege Secondaire
Beifahrersitz
Sedile Secondario
Asiento

110-295

1-ZV03-001-C

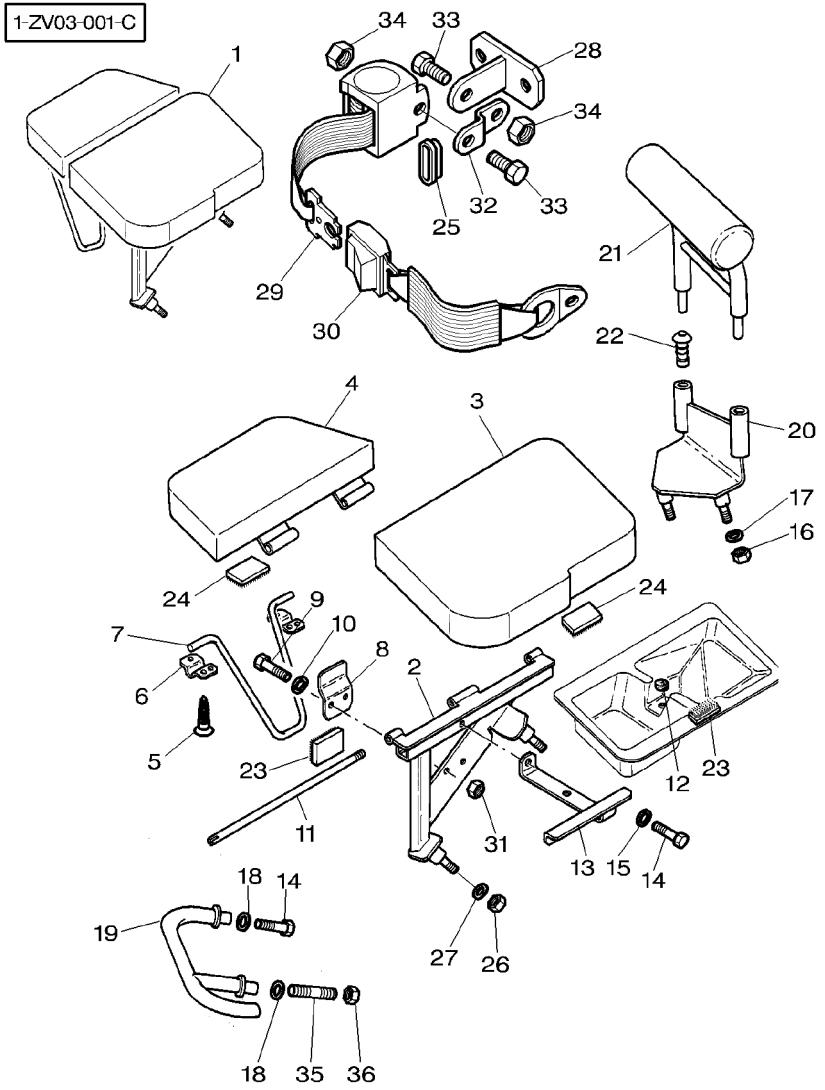

27	390972X1		**2**	WASHER METRIC	RONDELLE METR. RONDELLA METRICO	SCHEIBE METRISCH ARANDELA METRICO
28	3715118M1		**1**	SUPPORT	SUPPORT SUPPORTO	LAGERUNG DISPOS.DE SOSTEN
29	3715151M2		**1**	SAFETY BELT	CEINTURE DE PROT CINTURA DI SOST.	SICHERHEITSGURT CINTURA DE SEGUR
30	3715149M2		**1**	SAFETY BELT	CEINTURE DE PROT CINTURA DI SOST.	SICHERHEITSGURT CINTURA DE SEGUR
31	1441500X1	M6	**2**	LOCKNUT	ECROU BLOCAGE AUTOBLOCCANTE	FLACHMUTTER CONTRATUERCA
32	3781090M1	➡ H130001	**1**	STRAP	PATTE CORREGGIA	LASCHE FAJA
33	353558X1	➡ H130001 7/16X16	**2**	SCREW UNF	VIS UNF VITE UNF	SCHRAUBE UNF TORNILLO UNF
34	360201X1	➡ H130001	**2**	NUT UNF	ECROU UNF DADO UNF	MUTTER UNF TUERCA UNF
35	1440022X1	➡ H308002 M8X20	**2**	STUD	GOUJON PRIGIONIERO	STEHBOLZEN ESPARRAGO
36	339169X1	➡ H308002	**2**	NUT METRIC	ECROU METRIQUE DADO METRICO	MUTTER METRISCH TUERCA METRICO

115

Platform With Pillars	Roof
Plateforme Avec Piliers	Toit
Plattform Mit Pfosten	Dach
Piattaforma Con Montanti	Tettuccio
Plataforma Con Montantes	Techo

115-5

1-ZS11-001-A

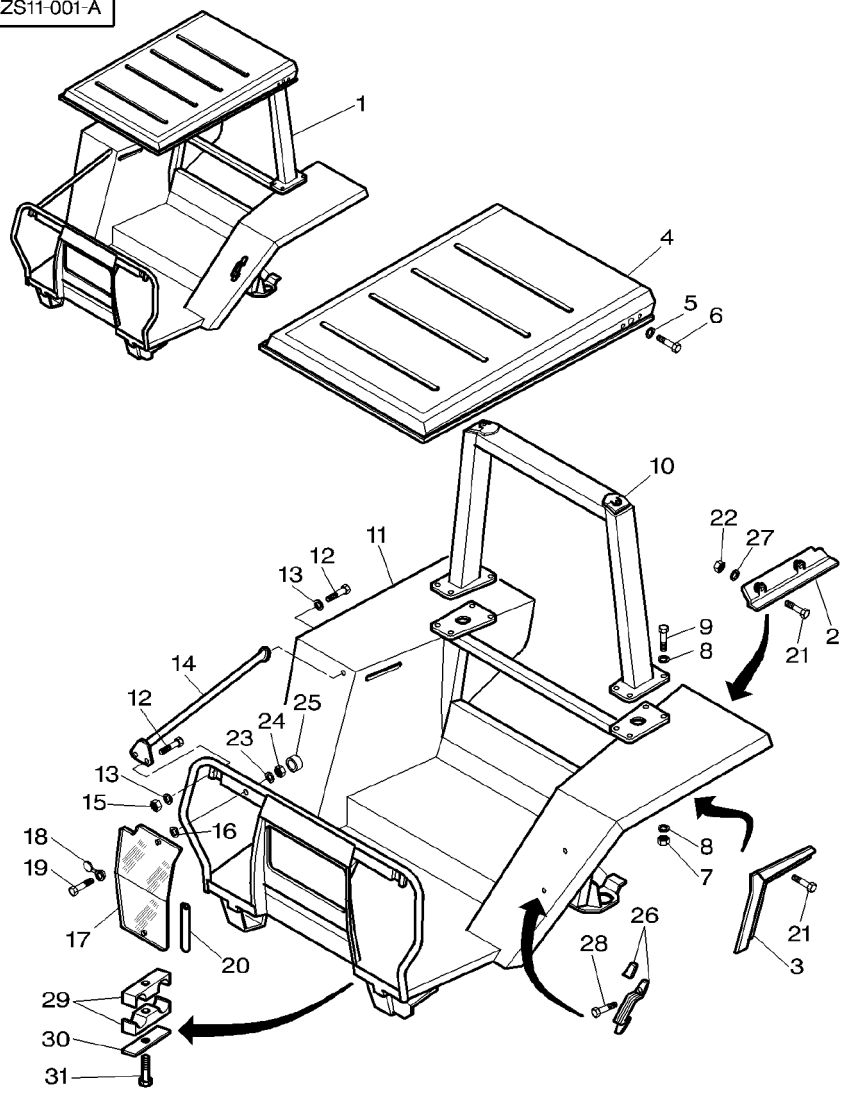

1	3778857M93			1	PLATFORM	PLATEFORME PIATTAFORMA	PLATTFORM PLATATORMA
2	3780317M1	◀		1	PROTECTOR	PROTECTEUR PROTETTORE	SCHUTZ PROTECTOR
2	3780318M1	▶		1	PROTECTOR	PROTECTEUR PROTETTORE	SCHUTZ PROTECTOR
3	3777982M2	◀		1	PROTECTOR	PROTECTEUR PROTETTORE	SCHUTZ PROTECTOR
3	3777983M2	▶		1	PROTECTOR	PROTECTEUR PROTETTORE	SCHUTZ PROTECTOR
4	3777574M1	1		1	ROOF	TOIT TETTO	DACH TECHO
5	385362X1	1		5	WASHER METRIC	RONDELLE METR. RONDELLA METRICO	SCHEIBE METRISCH ARANDELA METRICO
5	391026X1	1		1	LOCK WASHER	RONDELLE FREIN ROSETTA ELASTICA	FEDERRING ARANDELA GROWER
6	3009493X1	1	M10X30MM	6	SCREW METRIC	VIS METRIQUE VITE METRICA	SCHRAUBE METR TORNILLO METRICO
7	339034X1	1		8	NUT METRIC	ECROU METRIQUE DADO METRICO	MUTTER METRISCH TUERCA METRICO
8	3019575X1	1		16	WASHER METRIC	RONDELLE METR. RONDELLA METRICO	SCHEIBE METRISCH ARANDELA METRICO
9	391889X1	1	M16X70MM	8	SCREW	VIS VITE	SCHRAUBE TORNILLO
10	3777572M1	1		1	SAFETY FRAME	ARCEAU TELAIO SICUREZZA	SICHERH.RAHMEN BAST.SEGURIDAD
11	3778883M2	1		1	PLATFORM	PLATEFORME PIATTAFORMA	PLATTFORM PLATATORMA
12	3010182X1	1	M8X20MM	3	SCREW	VIS VITE	SCHRAUBE TORNILLO
13	385361X1	1		3	WASHER METRIC	RONDELLE METR. RONDELLA METRICO	SCHEIBE METRISCH ARANDELA METRICO
14	3778886M1	1		1	GUIDEWAY	RAMBARDE ROTAIA	FUEHRUNGSSCHIENE RIEL DE GUIA
15	339030X1	1		2	NUT METRIC	ECROU METRIQUE DADO METRICO	MUTTER METRISCH TUERCA METRICO
16	3902365M1			4	WASHER	RONDELLE RONDELLA	UNTERLEGSCHEIBE ARANDELA
17	3777577M1	◀		1	WINDOW	GLACE FINESTRINO	FENSTER VENTANA
17	3777578M1	▶		1	WINDOW	GLACE FINESTRINO	FENSTER VENTANA
18	3778855M1			4	STUD-NAIL	CABOCHON CHIODO PRIGIONI.	ZIERNAGEL TORNILLO CENTRAL
19	3010769X1		M8X30MM	4	SCREW	VIS VITE	SCHRAUBE TORNILLO
20	3777579M1	◀▶	2080MM	2	GASKET	JOINT GUARNIZIONE	DICHTSCHEIBE EMPAQUETADURA.
21	391074X1		M6X12MM	4	SCREW METRIC	VIS METRIQUE VITE METRICA	SCHRAUBE METR TORNILLO METRICO
21	339560X1		M6X16	6	SCREW METRIC	VIS METRIQUE VITE METRICA	SCHRAUBE METR TORNILLO METRICO

Platform With Pillars	Roof
Plateforme Avec Piliers	Toit
Plattform Mit Pfosten	Dach
Piattaforma Con Montanti	Tettuccio
Plataforma Con Montantes	Techo

115-5

1-ZS11-001-A

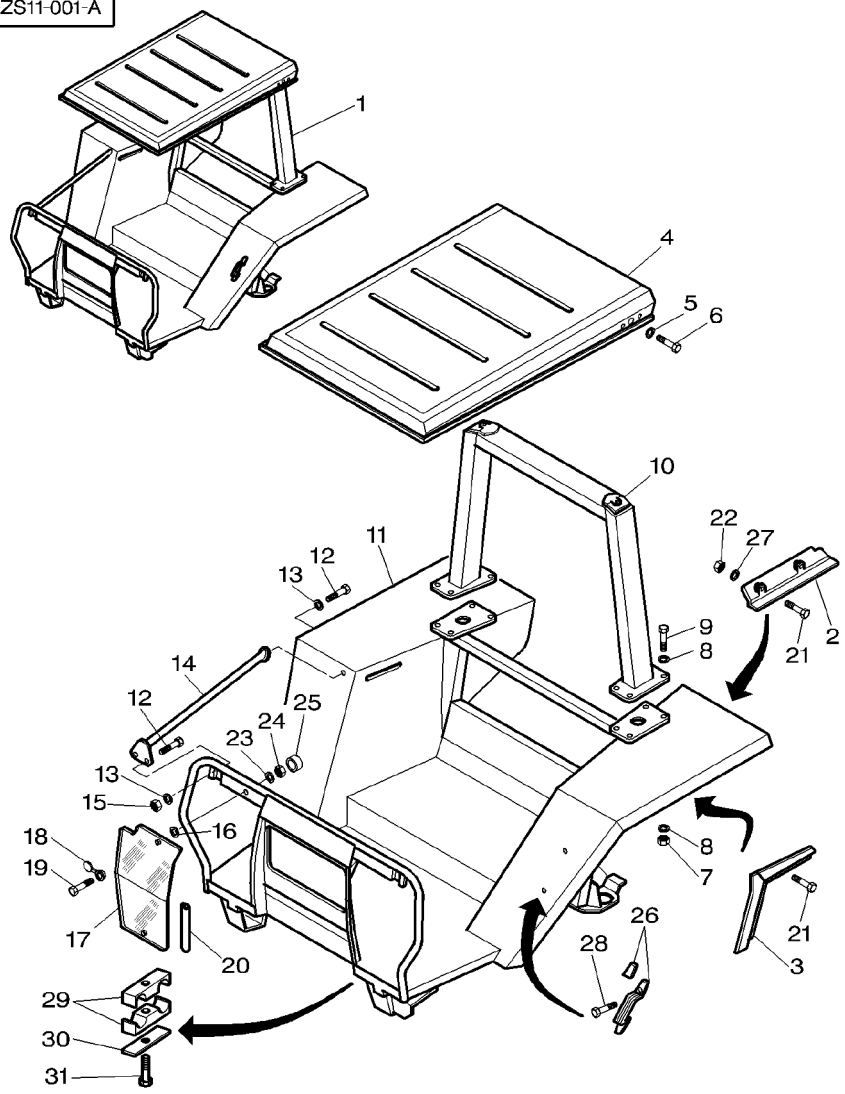

22	339030X1		**10**	NUT METRIC	ECROU METRIQUE DADO METRICO	MUTTER METRISCH TUERCA METRICO
23	390972X1		**2**	WASHER METRIC	RONDELLE METR. RONDELLA METRICO	SCHEIBE METRISCH ARANDELA METRICO
24	1441461X1		**2**	NUT METRIC	ECROU METRIQUE DADO METRICO	MUTTER METRISCH TUERCA METRICO
25	3616277M1		**2**	HELMET	CAPUCHON CASCO	SCHUTZHELM CASCO
26	3778931M1		**1**	HANDLE	POIGNEE MANIGLIA	HANDGRIFF MANETA
27	391038X1		**6**	WASHER METRIC	RONDELLE METR. RONDELLA METRICO	SCHEIBE METRISCH ARANDELA METRICO
28	3009281X1	M6X16	**2**	SCREW	VIS VITE	SCHRAUBE TORNILLO
29	3778877M1		**2**	BRIDLE	BRIDE BRIGLIA	SPANNBAND BRIDA
30	3778876M1		**1**	BRIDLE	BRIDE BRIGLIA	SPANNBAND BRIDA
31	339804X1		**1**	SCREW METRIC	VIS METRIQUE VITE METRICA	SCHRAUBE METR TORNILLO METRICO

Platform	Instrument Panel Cladding
Plateforme	Habillage Tableau De Bord
Plattform	Einfassung Fuer Instr.−Brett
Piattaforma	Cruscotto Cabina
Plataforma	Revestimiento Panel Instrumentos

115-10

1-ZS08-001-B

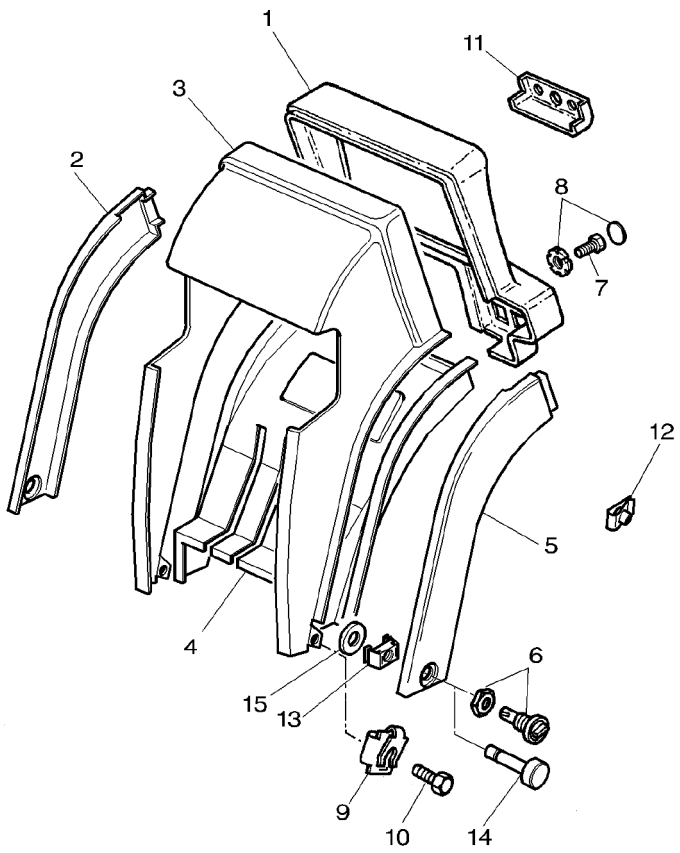

1	3778930M1		**1**	ENVELOPE	ENVELOPPE BUSTA	BEUTEL SOBRE
2	3778928M1	▶ H330030 ▶	**1**	FACING	GARNITURE RIVESTIMENTO	VERBLENDUNG PARAMENTO
2	3778928M2	▶ H330031 ▶	**1**	FACING	GARNITURE RIVESTIMENTO	VERBLENDUNG PARAMENTO
3	3778927M1		**1**	ENVELOPE	ENVELOPPE BUSTA	BEUTEL SOBRE
4	3778926M1		**1**	ENVELOPE	ENVELOPPE BUSTA	BEUTEL SOBRE
5	3778929M1	▶ H330030 ◀	**1**	FACING	GARNITURE RIVESTIMENTO	VERBLENDUNG PARAMENTO
5	3778929M2	▶ H330031 ◀	**1**	FACING	GARNITURE RIVESTIMENTO	VERBLENDUNG PARAMENTO
6	3618739M1	▶ H259015	**2**	BUTTON	BOUTON PULSANTE	KNOPFTASTE PULSADOR
7	339560X1	M6X16MM	**2**	SCREW METRIC	VIS METRIQUE VITE METRICA	SCHRAUBE METR TORNILLO METRICO
8	3713550M1		**2**	LATCH	VERROU SALISCENDI	RIEGEL CERROJO
9	3388231M1	M5	**1**	NUT	ECROU DADO	MUTTER TUERCA
10	**3010506X1**	M5X16MM	**7**	SCREW	VIS VITE	SCHRAUBE TORNILLO
10	3010578X1	M5X10MM	**2**	SCREW	VIS VITE	SCHRAUBE TORNILLO
11	3714209M1		**1**	PLATE	PLAQUE PIASTRA	PLATTE PLATO
12	3715142M1	⧗ 3/5MM	**2**	NUT	ECROU DADO	MUTTER TUERCA
12	3715143M1	⧗ 0,5/4MM	**1**	NUT	ECROU DADO	MUTTER TUERCA
13	3618738M1	▶ H259015	**2**	CLAMP	COLLIER FASCETTA	HALTESCHELLE ABRAZADERA
13	3782697M1	▶ H259016	**2**	CLAMP	COLLIER FASCETTA	HALTESCHELLE ABRAZADERA
14	3782696M1	▶ H259016	**2**	BUTTON	BOUTON PULSANTE	KNOPFTASTE PULSADOR
15	3782892M1	▶ H259016	**2**	WASHER	RONDELLE RONDELLA	UNTERLEGSCHEIBE ARANDELA

Platform
Plateforme
Plattform
Piattaforma
Plataforma

Cladding
Habillage
Einfassung
Cabina Alleggerita
Revestimiento

115-15

1-ZS07-001-B

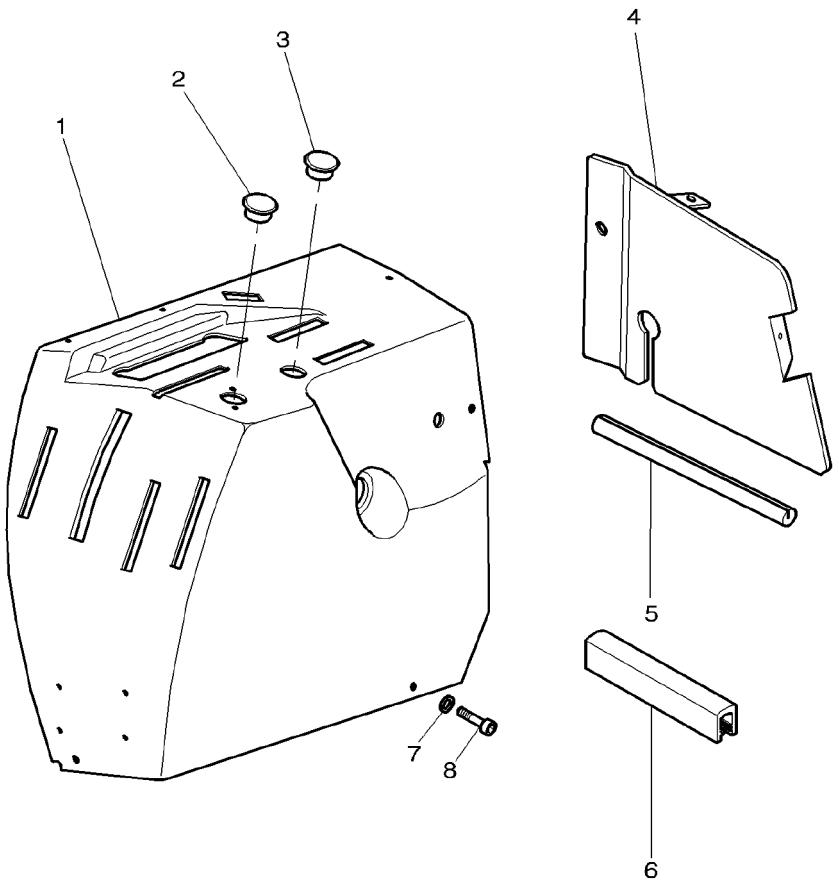

1	3778413M6		
2	3778808M1	[A]	
3	3380422M1	[A]	
4	3778868M2		
5	3777486M1	◀▶	195MM
6	3715482M1	◀▶	110MM
7	1427000M1		
8	**3010506X1**		

[A] WITHOUT POSITION CONTROL
SANS CONTROLE DE POSITION
OHNE POSITIONSEINSTELLUNG
SIN COMANDI POSIZIONAMENTO
SIN CONTROL DE POSICION

1	PLATE CLAMPING	PLATINE PIASTRA APPOGGIO	KLEMMPLATTE PLACA DE ABRAZO
1	PLUG	BOUCHON TAPPO	VERSCHL.STOPFEN TAPON
1	PLUG	BOUCHON TAPPO	VERSCHL.STOPFEN TAPON
1	PLATE	PLAQUE PIASTRA	PLATTE PLATO
1	PROFILE	PROFILE PROFILO	PROFIL PERFIL
1	GASKET	JOINT GUARNIZIONE	DICHTSCHEIBE EMPAQUETADURA.
6	WASHER	RONDELLE RONDELLA	UNTERLEGSCHEIBE ARANDELA
6	SCREW	VIS VITE	SCHRAUBE TORNILLO

Platform With Pillars	Mirrors
Plateforme Avec Piliers	Retroviseurs
Plattform Mit Pfosten	Ruckspiegel
Piattaforma Con Montanti	Retrovisore
Plataforma Con Montantes	Retrovisor

115-20

1-ZS31-001-A

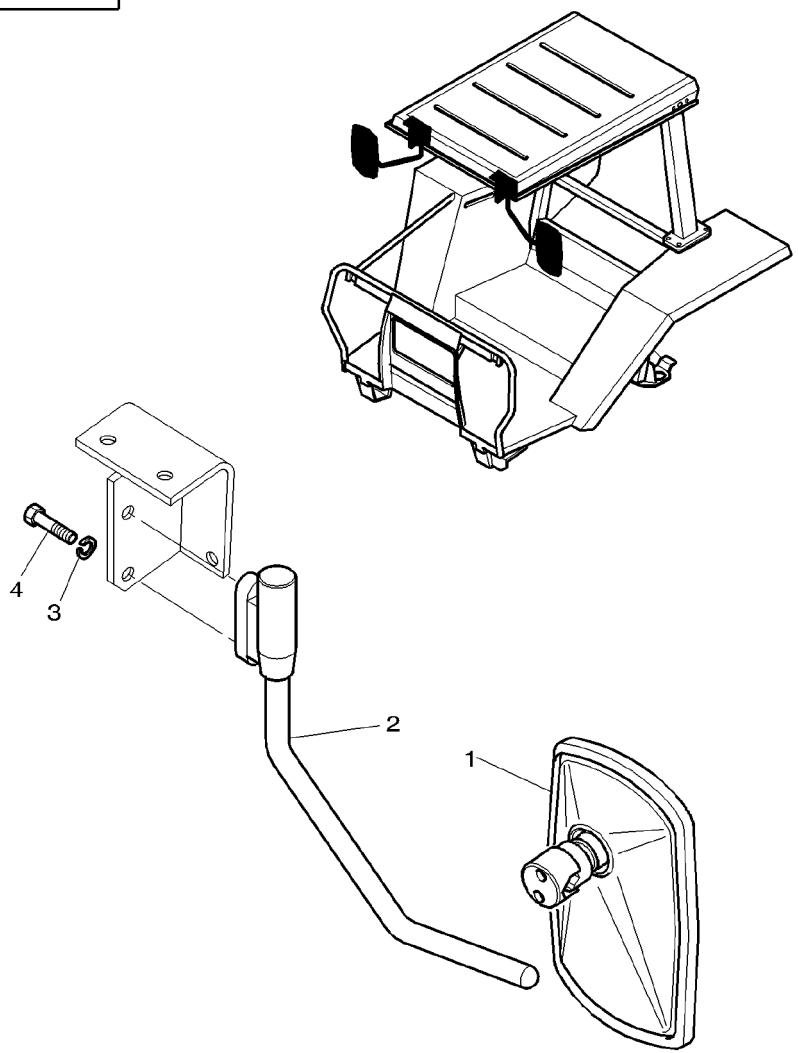

1	3806614M91		**2**	MIRROR	RETROVISEUR SPECCHIETTO	RUECKSPIEGEL RETROVISOR
2	3779518M1	◀	**1**	SUPPORT	SUPPORT SUPPORTO	LAGERUNG DISPOS.DE SOSTEN
2	3779519M1	▶	**1**	SUPPORT	SUPPORT SUPPORTO	LAGERUNG DISPOS.DE SOSTEN
3	391038X1	∅ 6-18 X 1,5	**4**	WASHER METRIC	RONDELLE METR. RONDELLA METRICO	SCHEIBE METRISCH ARANDELA METRICO
4	339560X1	M6X16	**4**	SCREW METRIC	VIS METRIQUE VITE METRICA	SCHRAUBE METR TORNILLO METRICO

1-ZR24-002-A

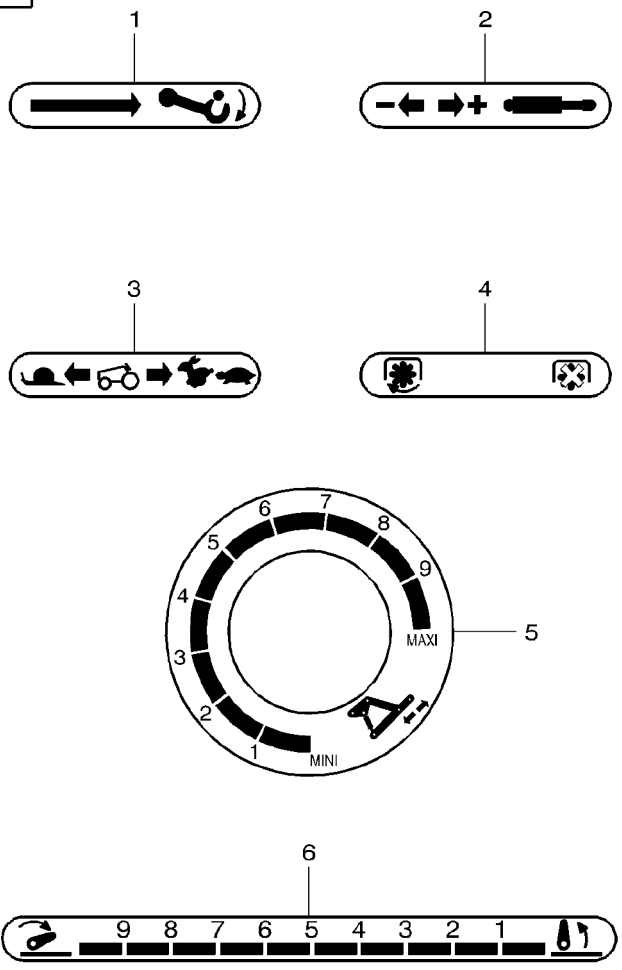

1	3779119M1	**1**	DECAL	DECALCOMANIE DECALCOMANIA	AUFKLEBER CALCOMANIA
2	3779120M1	**X**	DECAL	DECALCOMANIE DECALCOMANIA	AUFKLEBER CALCOMANIA
3	3779125M1	**1**	DECAL	DECALCOMANIE DECALCOMANIA	AUFKLEBER CALCOMANIA
4	3779121M1	**1**	DECAL	DECALCOMANIE DECALCOMANIA	AUFKLEBER CALCOMANIA
5	3779123M1	**1**	DECAL	DECALCOMANIE DECALCOMANIA	AUFKLEBER CALCOMANIA
6	3779124M2	**1**	DECAL	DECALCOMANIE DECALCOMANIA	AUFKLEBER CALCOMANIA

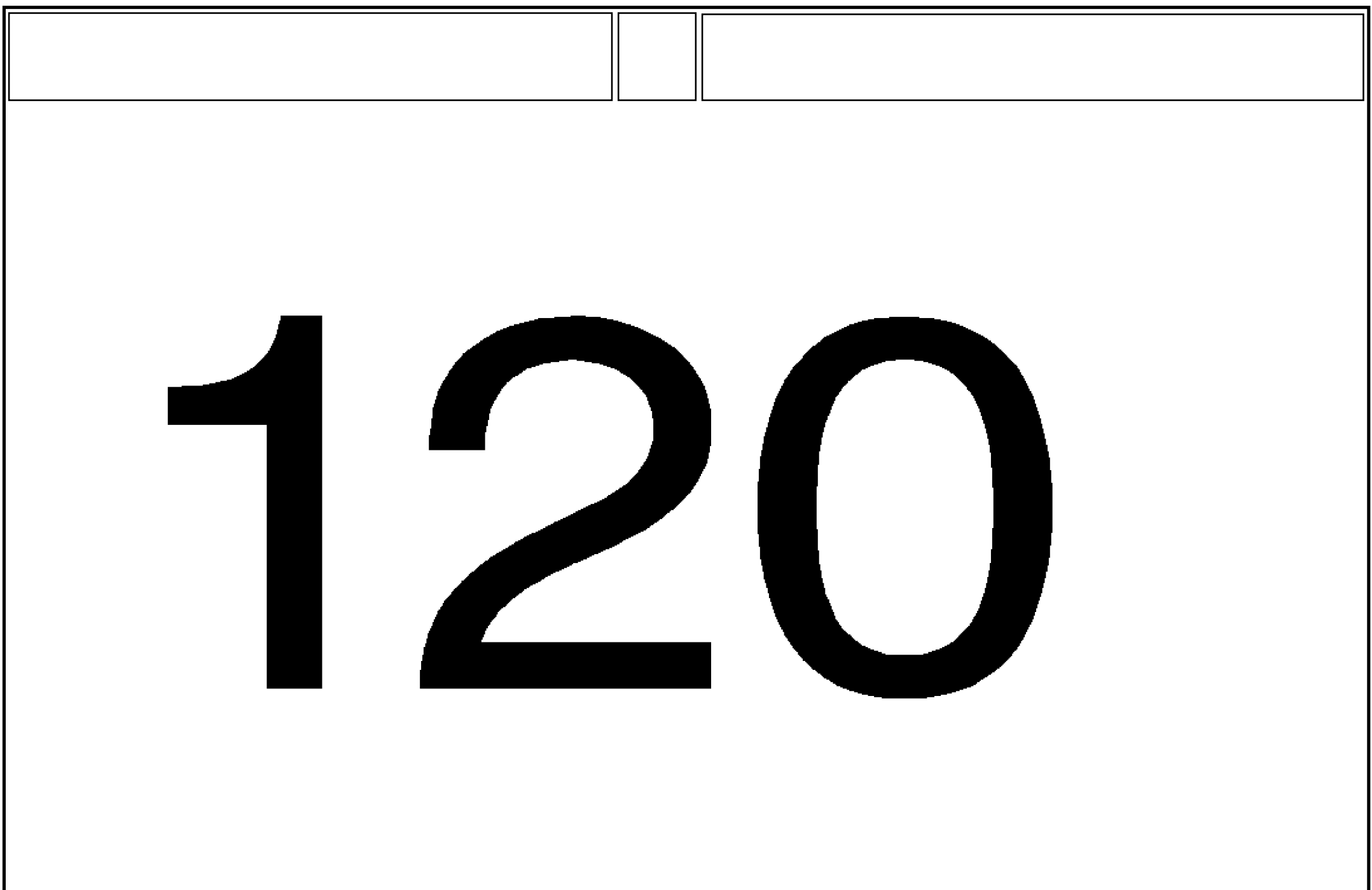
120

Lighting Equipment	Front	120-5	Cab
Eclairage	Avant		Cabine
Beleuchtungsanlage	Vorderseite		Kabine
Equipaggiamento Illuminazione	Frontale		Cabina
Equipo Alumbrado	Frontal		Cabina

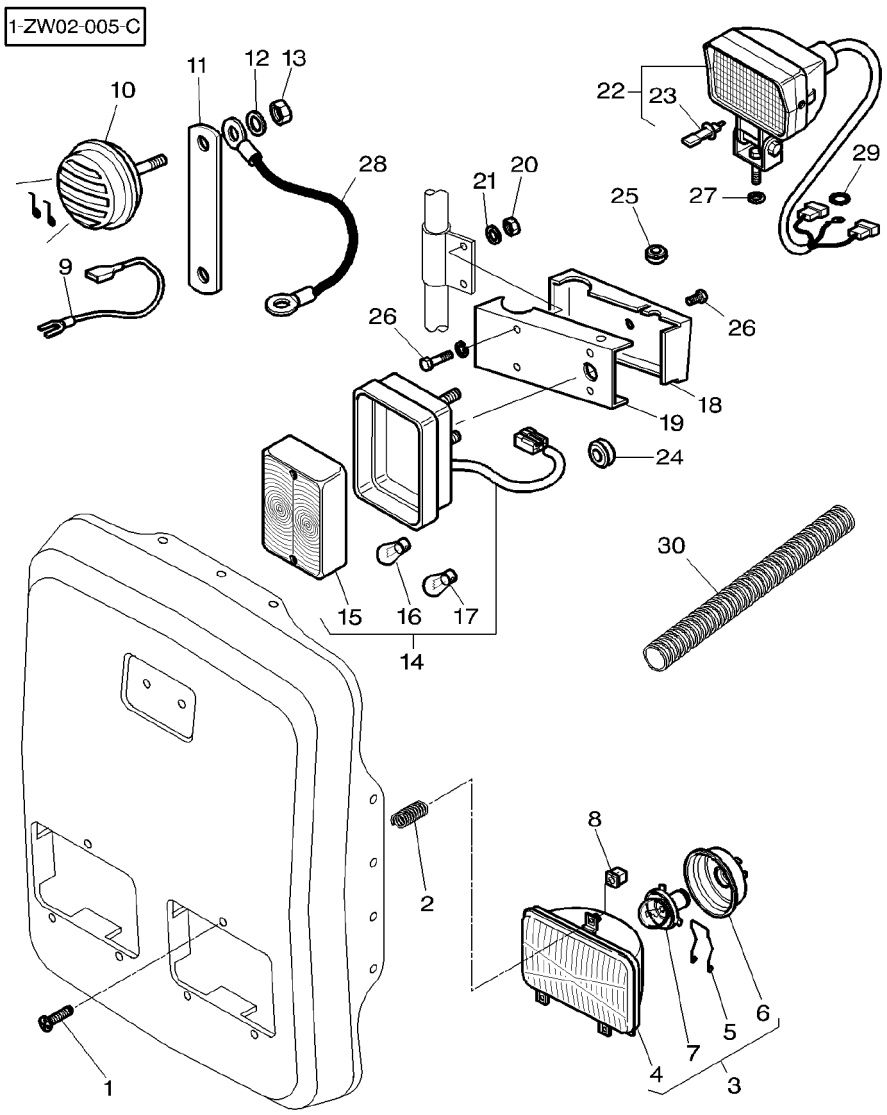

1	3771996M1		
2	3771550M1		
3	3809345M91	[A]	
3	3809346M91	[B]	
4		3	REP. NO 4
5	3901522M1	3	
6	3901521M1	3	
7	***961866M1***	3	
8	3809347M1		
9	3042257M1		
10	1678404M1		
11	3778841M1		
12	339374X1		
13	339169X1	M8	
14	***3714184M92***		
15	3105505M1	14	
16	***1420037M1***	14	
17	***621235M1***	14	
18	**3714858M1**	◀	
18	**3714857M1**	▶	
19	**3714316M2**	◀	
19	**3714317M2**	▶	
20	3010477X1		
21	1441100X1		
21	390469X1		
22	***3714399M92***		

6	SCREW	VIS	SCHRAUBE
		VITE	TORNILLO
6	SPRING	RESSORT	FEDER
		MOLLA	MUELLE
2	HEADLAMP	PHARE AVANT	FAHRSCHEINWERFER
		LAMPADA	FARO DELANTERO
2	HEADLAMP	PHARE AVANT	FAHRSCHEINWERFER
		LAMPADA	FARO DELANTERO
1	HOUSING	CARTER	GEHAEUSE
		CARCASSA	ALOJAMIENTO
1	CLIP	CLIP	SCHELLE
		FERMAGLIO	CRAPA RETEN
1	CAP	CHAPEAU	KAPPE
		CAPPELLO	TAPA
1	BULB H/L 45/40W	AMPOULE 45/40W	GLUEHL.45/40W
		BULBO 45/40W HL	BOMBFARO 45/40W
6	NUT	ECROU	MUTTER
		DADO	TUERCA
1	EARTH STRAP	FIL DE MASSE	MASSELEITUNG
		CAVO MASSA	CABLE DE MASA
1	HORN	AVERTISSEUR	HUPE
		CLACSON	BOCINA
1	STRAP	PATTE	LASCHE
		CORREGGIA	FAJA
1	LOCK WASHER	RONDELLE FREIN	FEDERRING
		ROSETTA ELASTICA	ARANDELA GROWER
1	NUT METRIC	ECROU METRIQUE	MUTTER METRISCH
		DADO METRICO	TUERCA METRICO
2	LIGHT	FEU	LEUCHTE
		FARO	ALUMBRADO
1	LENS	LENTILLE	LINSE
		LENTE	LENTE
1	BULB 12V 5W	AMPOULE 12V 5W	GLUEHL 12V 5W
		BULBO 12V 5W	BOMBILLA 12V 5W
1	BULB 21W SIDE	AMPOULE LAT 21W	GLUEHLAMPE 21W
		BULBO 21W LATER.	BOMB COSTADO21W
1	CASE ASSY	BOITIER	GEHAEUSE KPL
		CARCASSA COMPLET	CAJA COMPLETA
1	CASE ASSY	BOITIER	GEHAEUSE KPL
		CARCASSA COMPLET	CAJA COMPLETA
1	EXTENSION	RALLONGE	VERLAENGERUNG
		PROLUNGA	EXTENSION
1	EXTENSION	RALLONGE	VERLAENGERUNG
		PROLUNGA	EXTENSION
4	NUT METRIC	ECROU METRIQUE	MUTTER METRISCH
		DADO METRICO	TUERCA METRICO
4	WASHER	RONDELLE	UNTERLEGSCHEIBE
		RONDELLA	ARANDELA
4	WASHER METRIC	RONDELLE METR.	SCHEIBE METRISCH
		RONDELLA METRICO	ARANDELA METRICO
2	LAMP	PHARE	SCHEINWERFER
		LAMPADINA	FARO

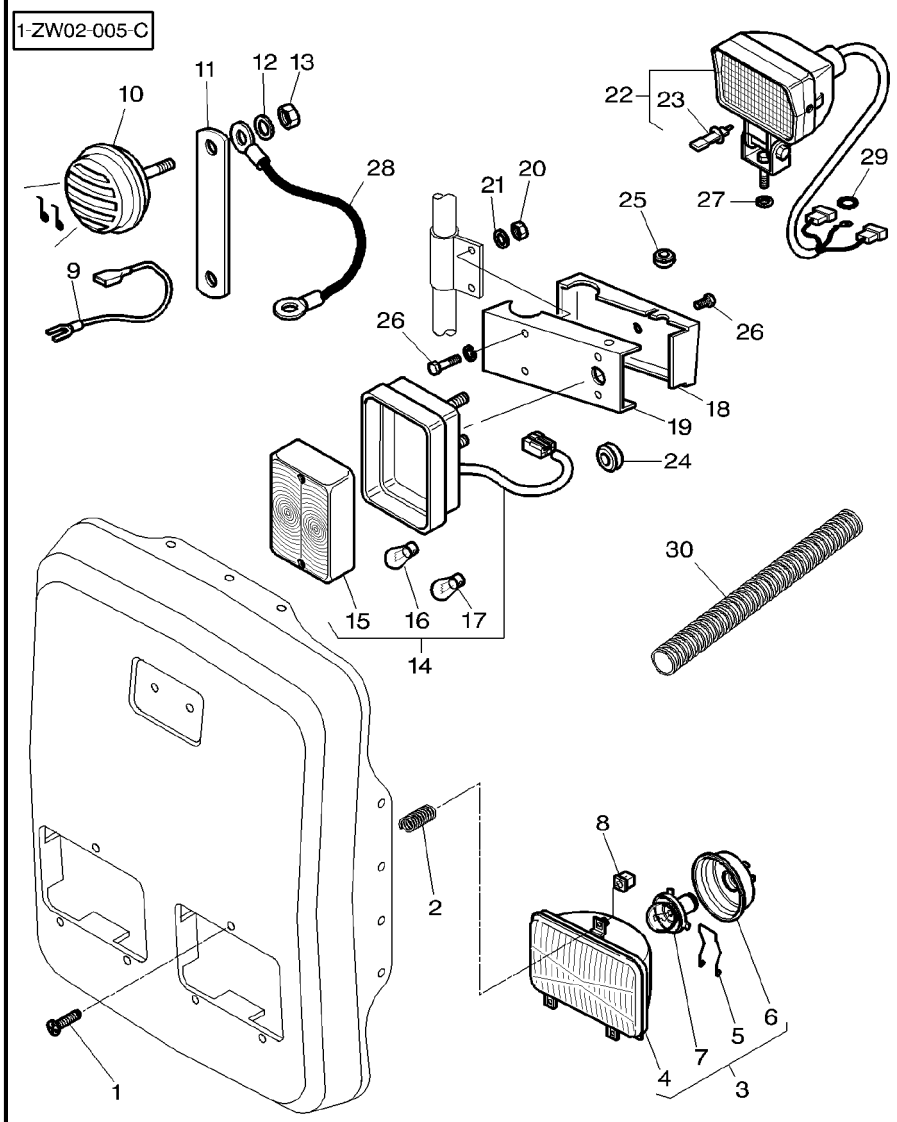

23	***1628494M1***	22	
24	3042523M1	∅	10−15
25	338977X1	∅	8−16
26	3010578X1		M5X10
27	385362X1		
28	3782897M1		
29	22428X		
30	5016845M1		

[A] WHITE BULB.FOR LH DRIVING
ECLAIRAGE BLANC.CIRCULATION A GAUCHE
WEISSE GLUELAMPE.FUER LINKS FAHREN
LAMPADINA BIANCA.PER CIRCULACION SINISTRA
LAMPARA BIANCO.PARA CIRCULACION IZQUIERDA

[B] WHITE BULB.FOR RH DRIVING
ECLAIRAGE BLANC.CIRCULATION A DROITE
WEISSE GLUELAMPE.FUER RECHTE FAHREN
LAMPADINA BIANCA.PER CIRCULACION DESTRA
LAMPARA BIANCO.PARA CIRCULACION DERECHO

1	BULB H3	AMPOULE H3 BULBO H3	GLUEHLAMPE H3 BOMBILLA H3
2	PLUG	BOUCHON TAPPO	VERSCHL.STOPFEN TAPON
2	GROMMET	PASSE FIL GOMMINO	GUMMITUELLE PASACABLE
6	SCREW	VIS VITE	SCHRAUBE TORNILLO
2	WASHER METRIC	RONDELLE METR. RONDELLA METRICO	SCHEIBE METRISCH ARANDELA METRICO
1	EARTH STRAP	FIL DE MASSE CAVO MASSA	MASSELEITUNG CABLE DE MASA
2	LOCK WASHER	RONDELLE FREIN ROSETTA ELASTICA	FEDERRING ARANDELA GROWER
1	SHEATH	GAINE GUAINA	HUELLE FUNDA

Lighting Equipment	Front	120-10	Platform
Eclairage	Avant		Plateforme
Beleuchtungsanlage	Vorderseite		Plattform
Equipaggiamento Illuminazione	Frontale		Piattaforma
Equipo Alumbrado	Frontal		Plataforma

1-ZW02-004-A

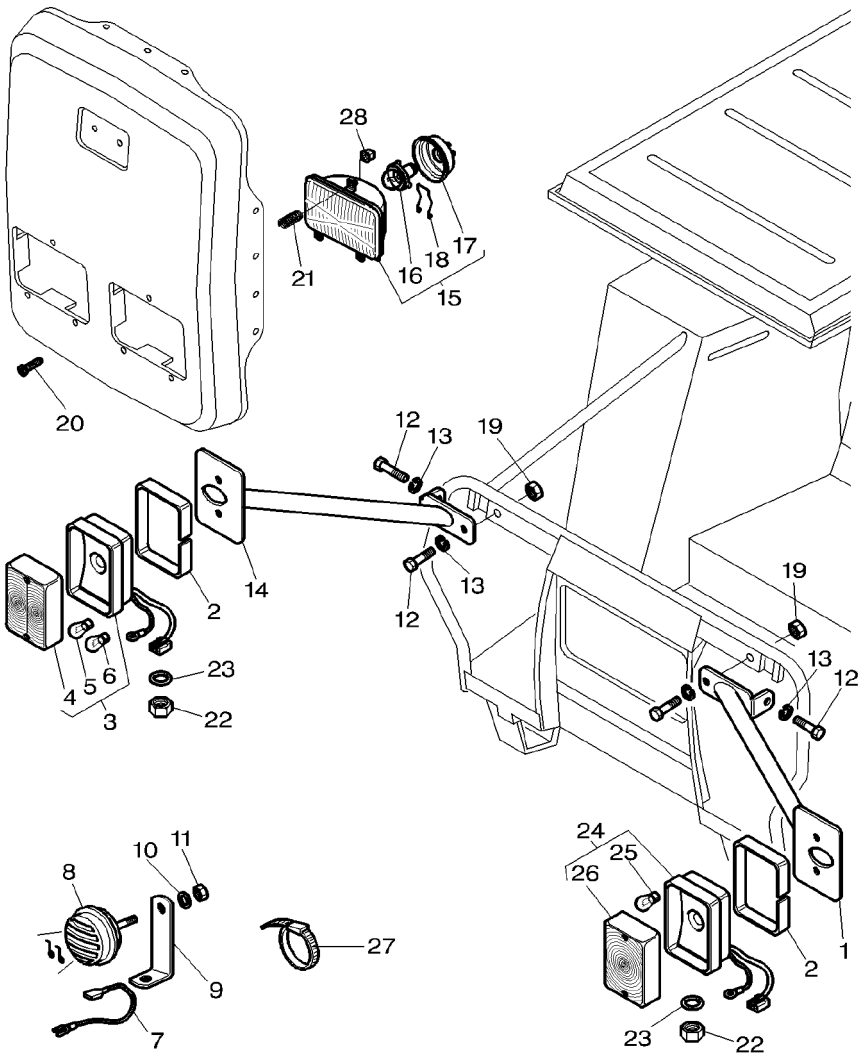

1	3777575M2	◀	1	SUPPORT	SUPPORT SUPPORTO	LAGERUNG DISPOS.DE SOSTEN
2	3777576M1		2	TRIM	ENJOLIVEUR FINITURA	ZIERLEISTE TAPIZADO
3	***3714184M92***		2	LIGHT	FEU FARO	LEUCHTE ALUMBRADO
4	3105505M1	3	1	LENS	LENTILLE LENTE	LINSE LENTE
5	***1420037M1***	3	1	BULB 12V 5W	AMPOULE 12V 5W BULBO 12V 5W	GLUEHL 12V 5W BOMBILLA 12V 5W
6	***621235M1***	3	1	BULB 21W SIDE	AMPOULE LAT 21W BULBO 21W LATER.	GLUEHLAMPE 21W BOMB COSTADO21W
7	3042257M1		1	EARTH STRAP	FIL DE MASSE CAVO MASSA	MASSELEITUNG CABLE DE MASA
8	1678404M1		1	HORN	AVERTISSEUR CLACSON	HUPE BOCINA
9	656632M4		1	BRACKET	SUPPORT FIXATION SUPPORTO FISSAGG	HALTEARM SOPORTE
10	339374X1	∅ 8MM	1	LOCK WASHER	RONDELLE FREIN ROSETTA ELASTICA	FEDERRING ARANDELA GROWER
10	22428X		1	LOCK WASHER	RONDELLE FREIN ROSETTA ELASTICA	FEDERRING ARANDELA GROWER
11	339169X1		1	NUT METRIC	ECROU METRIQUE DADO METRICO	MUTTER METRISCH TUERCA METRICO
12	339124X1	M8X16	4	SCREW METRIC	VIS METRIQUE VITE METRICA	SCHRAUBE METR TORNILLO METRICO
13	390972X1		4	WASHER METRIC	RONDELLE METR. RONDELLA METRICO	SCHEIBE METRISCH ARANDELA METRICO
14	3778881M2	▶	1	SUPPORT	SUPPORT SUPPORTO	LAGERUNG DISPOS.DE SOSTEN
15	3809346M91	[A]	2	HEADLAMP	PHARE AVANT LAMPADA	FAHRSCHEINWERFER FARO DELANTERO
15	3809345M91	[B]	2	HEADLAMP	PHARE AVANT LAMPADA	FAHRSCHEINWERFER FARO DELANTERO
16	***961866M1***	15	1	BULB H/L 45/40W	AMPOULE 45/40W BULBO 45/40W HL	GLUEHL.45/40W BOMBFARO 45/40W
17	3901521M1	15	1	CAP	CHAPEAU CAPPELLO	KAPPE TAPA
18	3901522M1	15	1	CLIP	CLIP FERMAGLIO	SCHELLE CRAPA RETEN
19	339169X1	M8	2	NUT METRIC	ECROU METRIQUE DADO METRICO	MUTTER METRISCH TUERCA METRICO
20	3771996M1		6	SCREW	VIS VITE	SCHRAUBE TORNILLO
21	3771550M1		6	SPRING	RESSORT MOLLA	FEDER MUELLE
22	1441961X1	M5	2	NUT METRIC	ECROU METRIQUE DADO METRICO	MUTTER METRISCH TUERCA METRICO
23	1441100X1		2	WASHER	RONDELLE RONDELLA	UNTERLEGSCHEIBE ARANDELA
24	***3714185M91***	(US)	2	LIGHT	FEU FARO	LEUCHTE ALUMBRADO

Lighting Equipment	Front	120-10	Platform
Eclairage	Avant		Plateforme
Beleuchtungsanlage	Vorderseite		Plattform
Equipaggiamento Illuminazione	Frontale		Piattaforma
Equipo Alumbrado	Frontal		Plataforma

1-ZW02-004-A

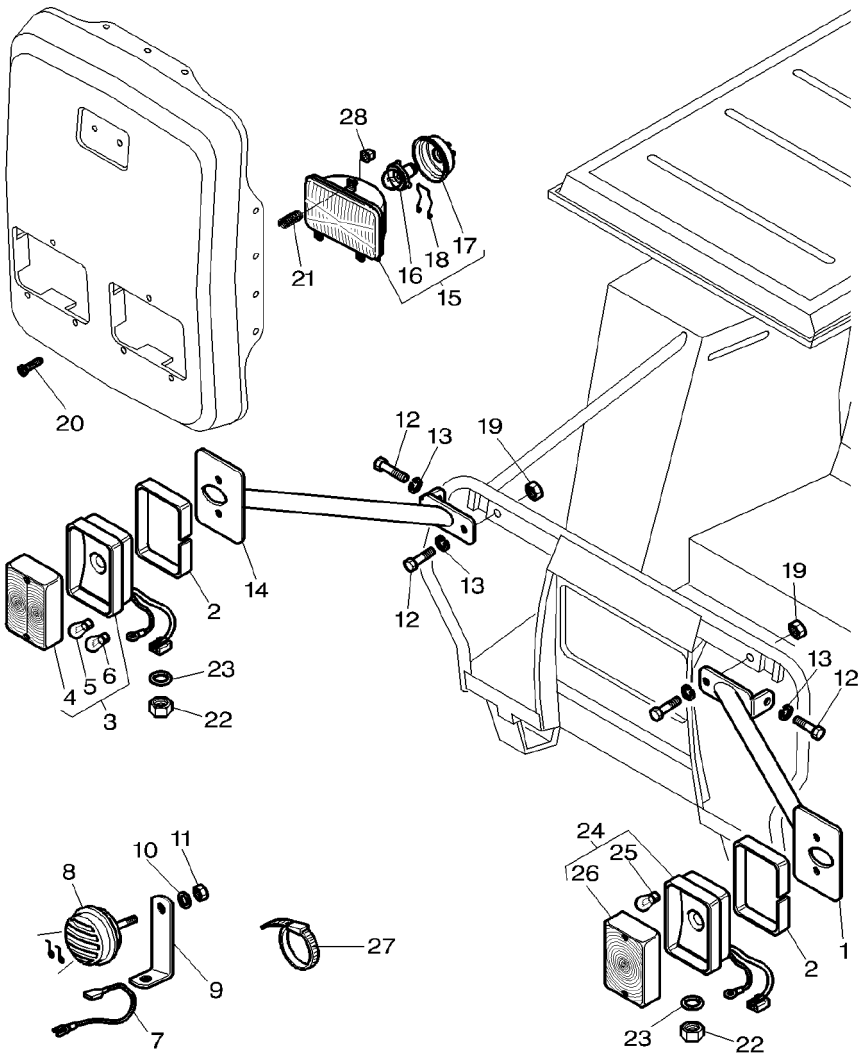

25	3105506M1	24	**1**	LENS	LENTILLE LENTE	LINSE LENTE
26	***621235M1***	24	**1**	BULB 21W SIDE	AMPOULE LAT 21W BULBO 21W LATER.	GLUEHLAMPE 21W BOMB COSTADO21W
27	3619622M1		**X**	CABLE TIE	ATTACHE CABLE FASCETTA CAVI	KABELBINDER ENLACE DE CABLE
28	3809347M1		**6**	NUT	ECROU DADO	MUTTER TUERCA

[A] WHITE BULB.FOR RH DRIVING
ECLAIRAGE BLANC.CIRCULATION A DROITE
WEISSE GLUELAMPE.FUER RECHTE FAHREN
LAMPADINA BIANCA.PER CIRCULACION DESTRA
LAMPARA BIANCO.PARA CIRCULACION DERECHO

[B] WHITE BULB.FOR LH DRIVING
ECLAIRAGE BLANC.CIRCULATION A GAUCHE
WEISSE GLUELAMPE.FUER LINKS FAHREN
LAMPADINA BIANCA.PER CIRCULACION SINISTRA
LAMPARA BIANCO.PARA CIRCULACION IZQUIERDA

1-ZW03-004-A

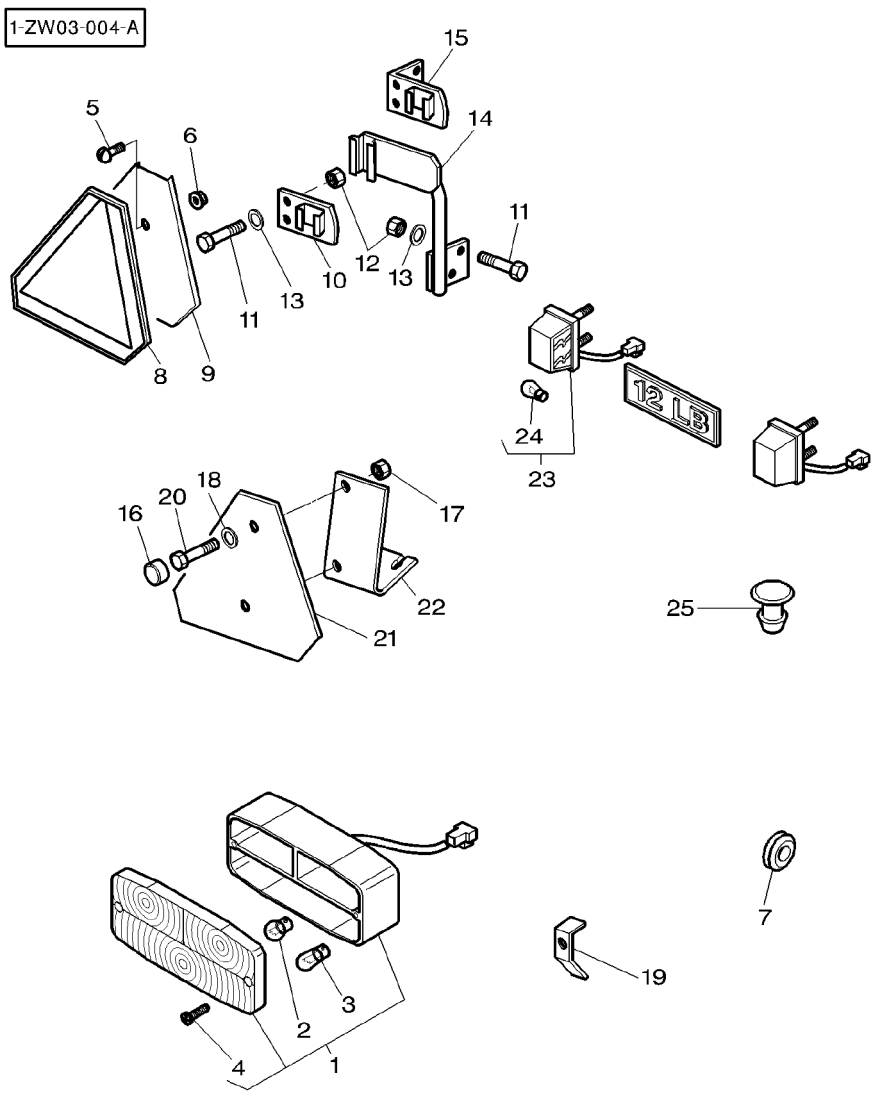

1	3781445M92	◀		**1**	REAR LIGHT	FEU ARRIERE LUCE POSTERIORE	RUECKF.SCHEINW. LUZ TRASERA
1	3781444M92	▶		**1**	REAR LIGHT	FEU ARRIERE LUCE POSTERIORE	RUECKF.SCHEINW. LUZ TRASERA
2	***621235M1***	1		**2**	BULB 21W SIDE	AMPOULE LAT 21W BULBO 21W LATER.	GLUEHLAMPE 21W BOMB COSTADO21W
3	***3002706X1***	1		**1**	BULB 12V 10W	AMPOULE 12V 10W BULBO 12V 10W	GLUEHL 12V 10W BOMBILLA 12V 10W
4	1440827X1	1	M5X30	**2**	SCREW	VIS VITE	SCHRAUBE TORNILLO
5	3580257M1		M5X20	**2**	SCREW	VIS VITE	SCHRAUBE TORNILLO
6	3010477X1			**2**	NUT METRIC	ECROU METRIQUE DADO METRICO	MUTTER METRISCH TUERCA METRICO
7	3580984M1		∅ 21/10-28	**2**	GROMMET	PASSE FIL GOMMINO	GUMMITUELLE PASACABLE
7	3777000M1		∅ 21-25MM	**2**	GROMMET	PASSE FIL GOMMINO	GUMMITUELLE PASACABLE
8	3040758M1		[A]	**1**	EMBLEM	EMBLEME EMBLEMA	EMBLEM EMBLEMA
8	3712185M1		[B]	**1**	TRIANGLE	TRIANGLE TRIANGOLO	DREIECK TRIANGULO
9	3389910M92			**1**	PLATE	PLAQUE PIASTRA	PLATTE PLATO
10	**3714371M91**			**1**	SUPPORT	SUPPORT SUPPORTO	LAGERUNG DISPOS.DE SOSTEN
11	339123X1		M8X20	**4**	SCREW METRIC	VIS METRIQUE VITE METRICA	SCHRAUBE METR TORNILLO METRICO
12	339169X1			**4**	NUT METRIC	ECROU METRIQUE DADO METRICO	MUTTER METRISCH TUERCA METRICO
13	339374X1			**4**	LOCK WASHER	RONDELLE FREIN ROSETTA ELASTICA	FEDERRING ARANDELA GROWER
14	3715817M91			**1**	SUPPORT	SUPPORT SUPPORTO	LAGERUNG DISPOS.DE SOSTEN
15	3389907M92			**1**	REFLECTOR MTG.	SUPPORT REFLECT MONT.RIFLETTORE	RUECKSTR.HALTER FJION.REFLECTOR
16	3714113M1			**2**	PLUG	BOUCHON TAPPO	VERSCHL.STOPFEN TAPON
17	339030X1			**2**	NUT METRIC	ECROU METRIQUE DADO METRICO	MUTTER METRISCH TUERCA METRICO
18	339375X1			**2**	LOCK WASHER	RONDELLE FREIN ROSETTA ELASTICA	FEDERRING ARANDELA GROWER
19	3713696M1			**4**	BRIDLE	BRIDE BRIGLIA	SPANNBAND BRIDA
20	339560X1		M6X16	**2**	SCREW METRIC	VIS METRIQUE VITE METRICA	SCHRAUBE METR TORNILLO METRICO
21	71379435			**1**	TRIANGLE	TRIANGLE TRIANGOLO	DREIECK TRIANGULO
22	3778811M1			**1**	SUPPORT	SUPPORT SUPPORTO	LAGERUNG DISPOS.DE SOSTEN
23	**3619018M91**			**2**	N/PLATE LAMP	FEU PLAQUE IMMAT LAMPADINA TARGA	KENNZ.LEUCHTE LUZ DE MATRICULA

1-ZW03-004-A

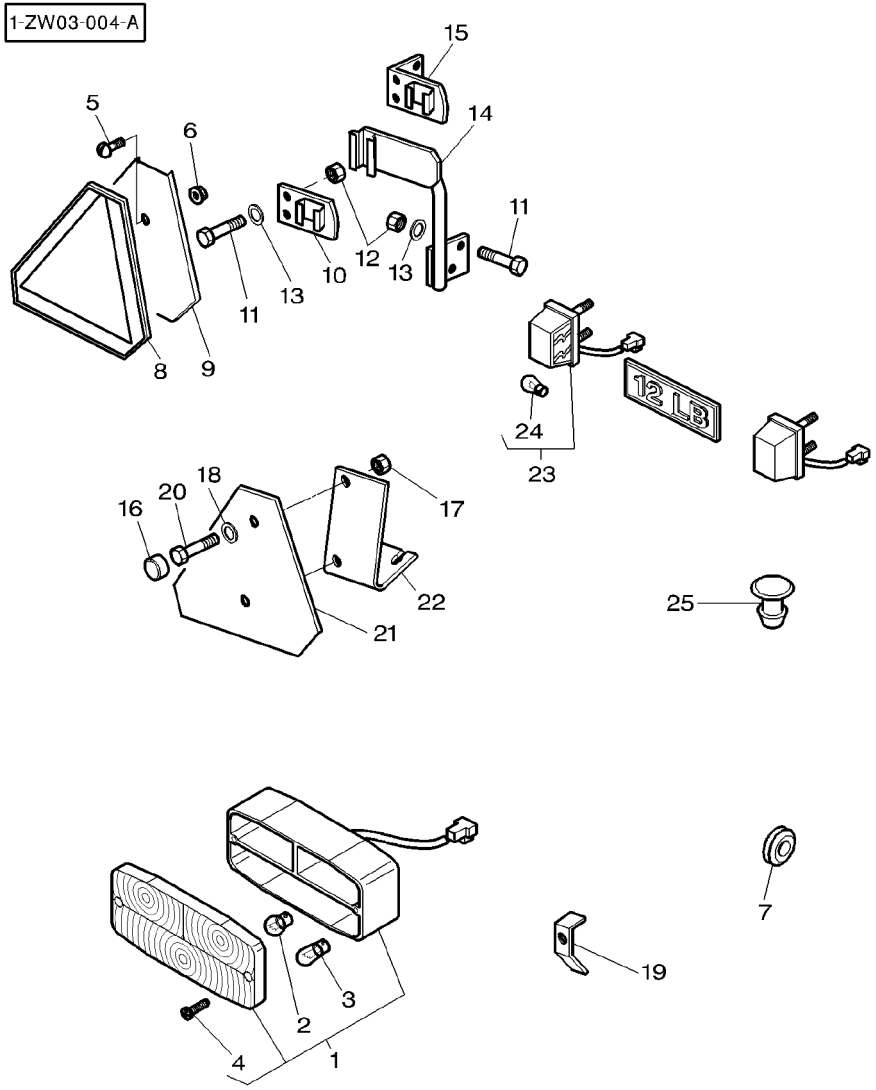

24	3042087M1	23		**1**	BULB 12V 10W	AMPOULE 12V 10W BULBO 12V 10W BOUCHON TAPPO	GLUEHL 12V 10W BOMBILLA 12V 10W VERSCHL.STOPFEN TAPON
25	3713404M1		∅ 15MM	**1**	PLUG		

[A] ADHESIVE
ADHESIF
HAFTSTOFF
ADESIVO
ADESIVO

[B] WITH HOLES
AVEC TROUS
MIT LOCHEN
CON FORI
CON ORIFICIOS

Lighting Equipment	Rear
Eclairage	Arriere
Beleuchtungsanlage	Hinterteil
Equipaggiamento Illuminazione	Posteriore
Equipo Alumbrado	Trasera

120-20

North America
Amerique Du Nord
Nordamerika
Nord America
Norte America

1-ZW03-003-A

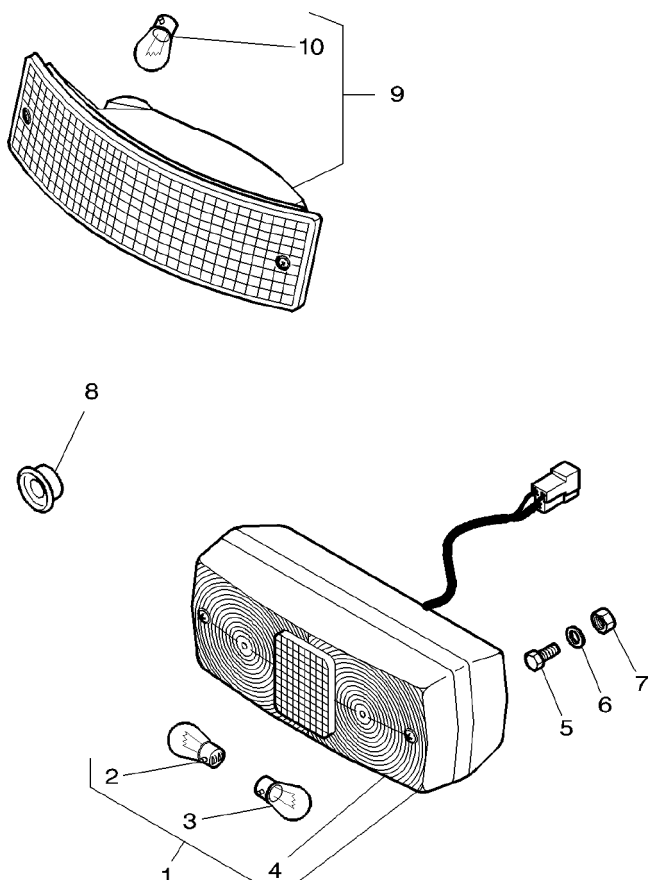

1	3778660M92		▶	**1**	REAR LIGHT	FEU ARRIERE LUCE POSTERIORE	RUECKF.SCHEINW. LUZ TRASERA
1	3778428M92		◀	**1**	REAR LIGHT	FEU ARRIERE LUCE POSTERIORE	RUECKF.SCHEINW. LUZ TRASERA
2	***621235M1***	1		**1**	BULB 21W SIDE	AMPOULE LAT 21W BULBO 21W LATER.	GLUEHLAMPE 21W BOMB COSTADO21W
3	***908543M1***	1		**1**	BULB S/L 21/5W	AMPOULE 21/5W BULBO 21/5W	GLUEHLAMPE 21/5W BOMB C/I 21/5W
4	**3310307M91**	1		**1**	LENS	LENTILLE LENTE	LINSE LENTE
5	339666X1		M6X20	**4**	SCREW METRIC	VIS METRIQUE VITE METRICA	SCHRAUBE METR TORNILLO METRICO
6	391038X1			**4**	WASHER METRIC	RONDELLE METR. RONDELLA METRICO	SCHEIBE METRISCH ARANDELA METRICO
7	339030X1			**4**	NUT METRIC	ECROU METRIQUE DADO METRICO	MUTTER METRISCH TUERCA METRICO
8	3580984M1		∅ 21/10−28 MM	**2**	GROMMET	PASSE FIL GOMMINO	GUMMITUELLE PASACABLE
8	3777000M1		∅ 21−25 MM	**2**	GROMMET	PASSE FIL GOMMINO	GUMMITUELLE PASACABLE
9	***5015731M91***			**2**	REAR LIGHT	FEU ARRIERE LUCE POSTERIORE	RUECKF.SCHEINW. LUZ TRASERA
10	***621235M1***	9		**1**	BULB 21W SIDE	AMPOULE LAT 21W BULBO 21W LATER.	GLUEHLAMPE 21W BOMB COSTADO21W

Lighting Equipment	Rear	120-25	Platform
Eclairage	Arriere		Plateforme
Beleuchtungsanlage	Hinterteil		Plattform
Equipaggiamento Illuminazione	Posteriore		Piattaforma
Equipo Alumbrado	Trasera		Plataforma

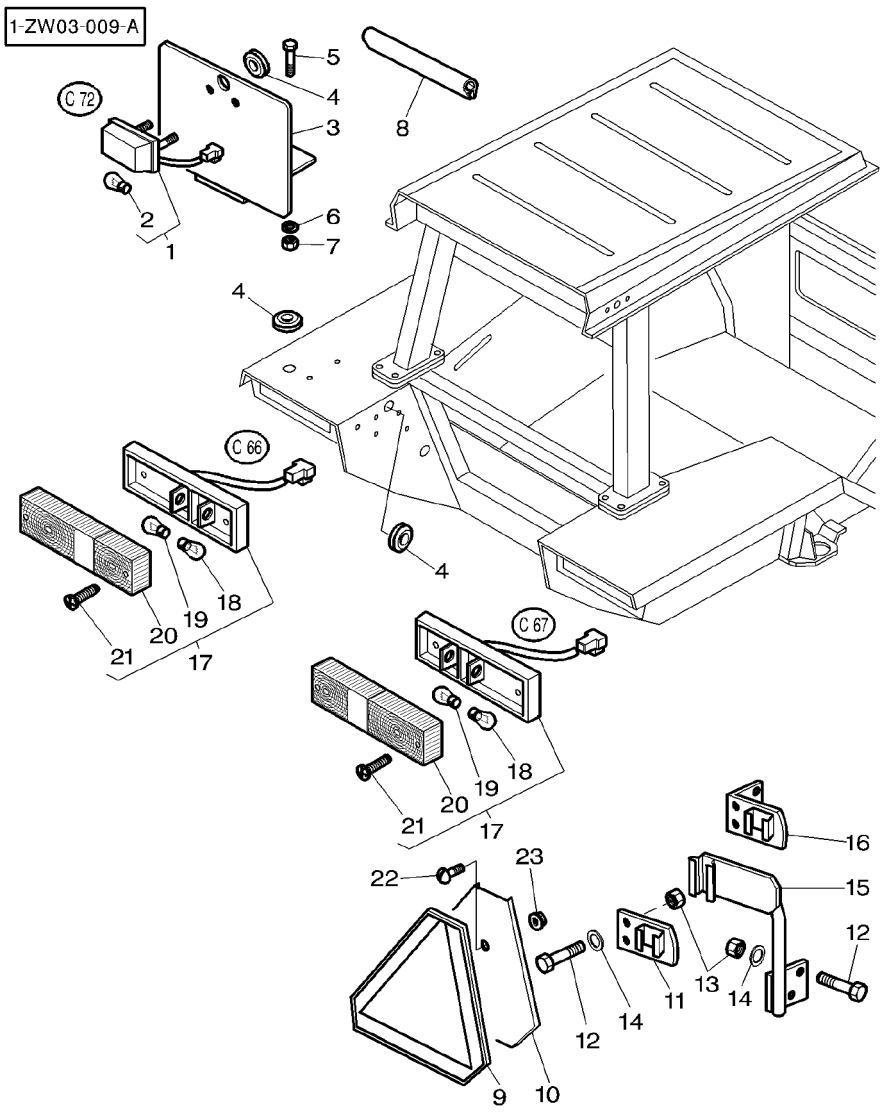

1	3713952M91			1	N/PLATE LAMP	FEU PLAQUE IMMAT LAMPADINA TARGA	KENNZ.LEUCHTE LUZ DE MATRICULA
2	***3002706X1***	1		1	BULB 12V 10W	AMPOULE 12V 10W BULBO 12V 10W	GLUEHL 12V 10W BOMBILLA 12V 10W
3	3713954M1			1	SUPPORT	SUPPORT SUPPORTO	LAGERUNG DISPOS.DE SOSTEN
4	367439X1	∅	15-25	4	GROMMET	PASSE FIL GOMMINO	GUMMITUELLE PASACABLE
4	3580984M1	∅	21/10-28	2	GROMMET	PASSE FIL GOMMINO	GUMMITUELLE PASACABLE
4	338977X1	∅	8-16	1	GROMMET	PASSE FIL GOMMINO	GUMMITUELLE PASACABLE
5	339123X1	M8X20		2	SCREW METRIC	VIS METRIQUE VITE METRICA	SCHRAUBE METR TORNILLO METRICO
6	339374X1			2	LOCK WASHER	RONDELLE FREIN ROSETTA ELASTICA	FEDERRING ARANDELA GROWER
7	339169X1	M8		2	NUT METRIC	ECROU METRIQUE DADO METRICO	MUTTER METRISCH TUERCA METRICO
8	3777486M1	◄►	200MM	1	PROFILE	PROFILE PROFILO	PROFIL PERFIL
8	3715482M1	◄►	110MM	1	GASKET	JOINT GUARNIZIONE	DICHTSCHEIBE EMPAQUETADURA.
9	3040758M1	[A]		1	EMBLEM	EMBLEME EMBLEMA	EMBLEM EMBLEMA
9	3712185M1	[B]		1	TRIANGLE	TRIANGLE TRIANGOLO	DREIECK TRIANGULO
10	3389910M92			1	PLATE	PLAQUE PIASTRA	PLATTE PLATO
11	**3714371M91**			1	SUPPORT	SUPPORT SUPPORTO	LAGERUNG DISPOS.DE SOSTEN
12	339123X1	M8X20		4	SCREW METRIC	VIS METRIQUE VITE METRICA	SCHRAUBE METR TORNILLO METRICO
13	339169X1			4	NUT METRIC	ECROU METRIQUE DADO METRICO	MUTTER METRISCH TUERCA METRICO
14	339374X1			4	LOCK WASHER	RONDELLE FREIN ROSETTA ELASTICA	FEDERRING ARANDELA GROWER
15	3715817M91			1	SUPPORT	SUPPORT SUPPORTO	LAGERUNG DISPOS.DE SOSTEN
16	3389907M92			1	REFLECTOR MTG.	SUPPORT REFLECT MONT.RIFLETTORE	RUECKSTR.HALTER FJION.REFLECTOR
17	***3713911M92***	(US)		2	LIGHT	FEU FARO	LEUCHTE ALUMBRADO
17	3713912M91	(US)		2	LIGHT	FEU FARO	LEUCHTE ALUMBRADO
18	***908543M1***	17		1	BULB S/L 21/5W	AMPOULE 21/5W BULBO 21/5W	GLUEHLAMPE 21/5W BOMB C/I 21/5W
19	***621235M1***	17		1	BULB 21W SIDE	AMPOULE LAT 21W BULBO 21W LATER.	GLUEHLAMPE 21W BOMB COSTADO21W
20	**3105050M1**	17		1	REFLECTOR	CATADIOPTRE CATARIFRANGENTE	REFLEKTOR CATADIOPTRICO
21	3001725X1	17		2	SCREW	VIS VITE	SCHRAUBE TORNILLO

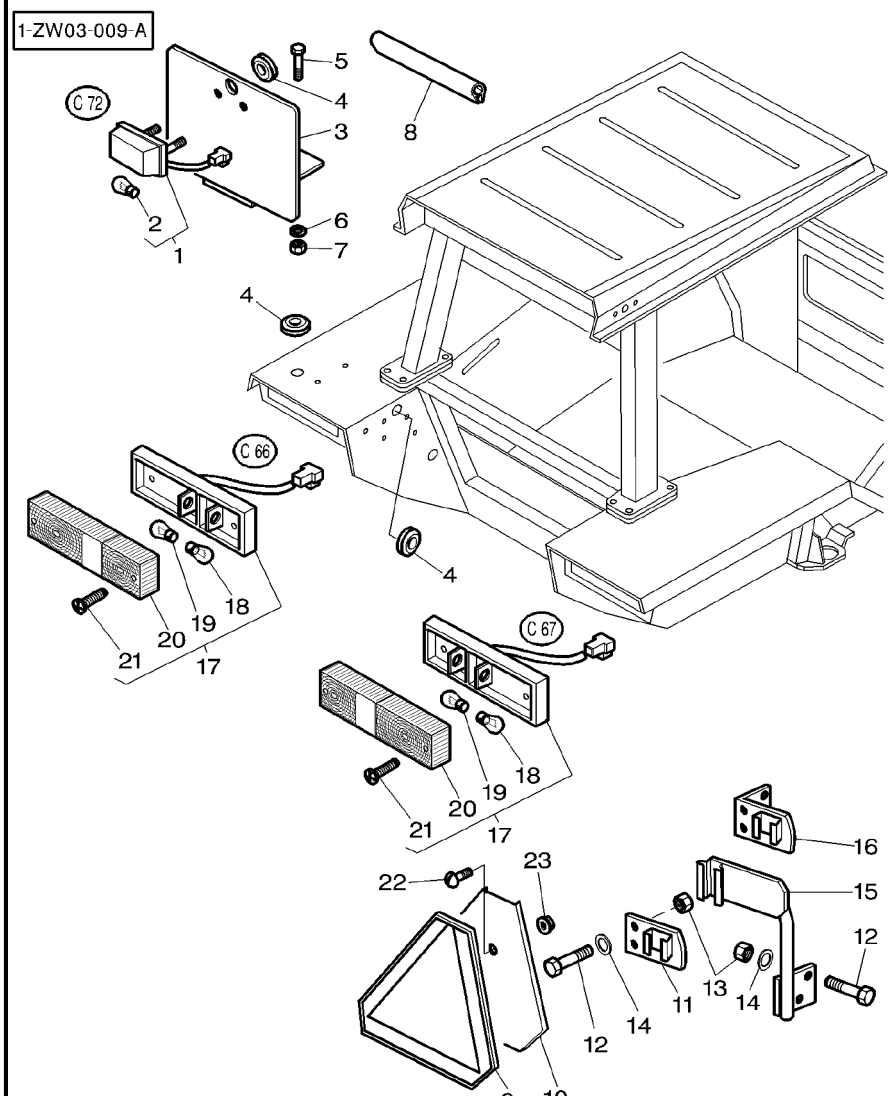

22	3580257M1	M5X20	**2**	SCREW	VIS VITE	SCHRAUBE TORNILLO
23	3010477X1		**2**	NUT METRIC	ECROU METRIQUE DADO METRICO	MUTTER METRISCH TUERCA METRICO

[A] ADHESIVE
ADHESIF
HAFTSTOFF
ADESIVO
ADESIVO

[B] WITH HOLES
AVEC TROUS
MIT LOCHEN
CON FORI
CON ORIFICIOS

Traffic Warning
Equipement Signalisation
Warausrustung
Equipaggiamento Segnalazione
Herramental Senalizacion

120-30

1-ZW27-004-B

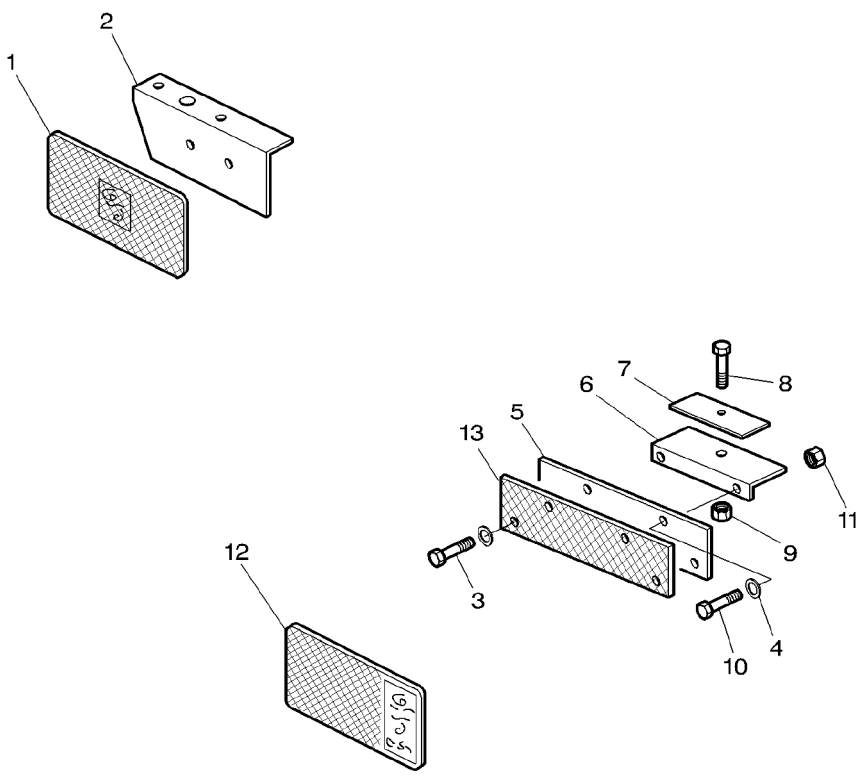

1	3581703M1	[A]	**2**	REFLECTOR	CATADIOPTRE CATARIFRANGENTE	REFLEKTOR CATADIOPTRICO
2	3052943M2	◀	**1**	BEARER	SUPPORT PALIER SUPPORTO PORTANT	AUFLAGER DISPOS.PORTADOR
2	3052944M2	▶	**1**	BEARER	SUPPORT PALIER SUPPORTO PORTANT	AUFLAGER DISPOS.PORTADOR
2	3783372M1	[B] ◀	**1**	SUPPORT	SUPPORT SUPPORTO	LAGERUNG DISPOS.DE SOSTEN
2	3783373M1	[B] ▶	**1**	SUPPORT	SUPPORT SUPPORTO	LAGERUNG DISPOS.DE SOSTEN
3	390990X1	➡| 13/09/1999 M5X12	**4**	SCREW METRIC	VIS METRIQUE VITE METRICA	SCHRAUBE METR TORNILLO METRICO
4	3019560X1	➡| 13/09/1999	**8**	WASHER	RONDELLE RONDELLA	UNTERLEGSCHEIBE ARANDELA
5	3615903M1	➡| 13/09/1999	**2**	RUBBER	CAOUTCHOUC COTE	GUMMI CAUCHO
6	3615912M91	➡| 13/09/1999	**2**	SUPPORT	SUPPORT SUPPORTO	LAGERUNG DISPOS.DE SOSTEN
7	3615904M1	➡| 13/09/1999	**2**	BRIDLE	BRIDE BRIGLIA	SPANNBAND BRIDA
8	339010X1	➡| 13/09/1999 M8X40	**2**	BOLT METRIC	BOULON METRIQUE BULLONE METRICO	MASCH.SCHRB MET PERNO METRICO
9	394367X1	➡| 13/09/1999	**2**	LOCKNUT	ECROU BLOCAGE AUTOBLOCCANTE	FLACHMUTTER CONTRATUERCA
10	3000926X1	➡| 13/09/1999 M5X10	**4**	SCREW	VIS VITE	SCHRAUBE TORNILLO
11	390995X1	➡| 13/09/1999	**4**	NUT METRIC	ECROU METRIQUE DADO METRICO	MUTTER METRISCH TUERCA METRICO
12	3389596M1	31,5X70	**X**	REFLECTOR	CATADIOPTRE CATARIFRANGENTE	REFLEKTOR CATADIOPTRICO
13	**3713522M1**	[A] ➡| 13/09/1999	**2**	REFLECTOR	CATADIOPTRE CATARIFRANGENTE	REFLEKTOR CATADIOPTRICO

[A] WITH ADHESIVE
AVEC ADHESIF
MIT HAFTVERMOGEN
CON ADHESIVIDAD
CON ADESIVITA

[B] FOR REAR AXLE HOUSING WITH CONPOSITE REDUCER
POUR TROMPETTES AVEC REDUCTEUR COMPOSE
MIT VERSTAERKTER HINTERACHSE MIT ZUSAMMENGESETZT
CON CARCASSA ASSALE POSTERIORE RIDUTTORE COMPOSIT
CON CARCASA EJE TRASERO REDUCTEUR COMPOSADO

Trailor Electric Socket
Prise Electrique De Remorque
Steckeranhaenger
Presaellectric Di Rimorchio
Tomacorriente De Remolque

120-35

1-ZW39-002-C

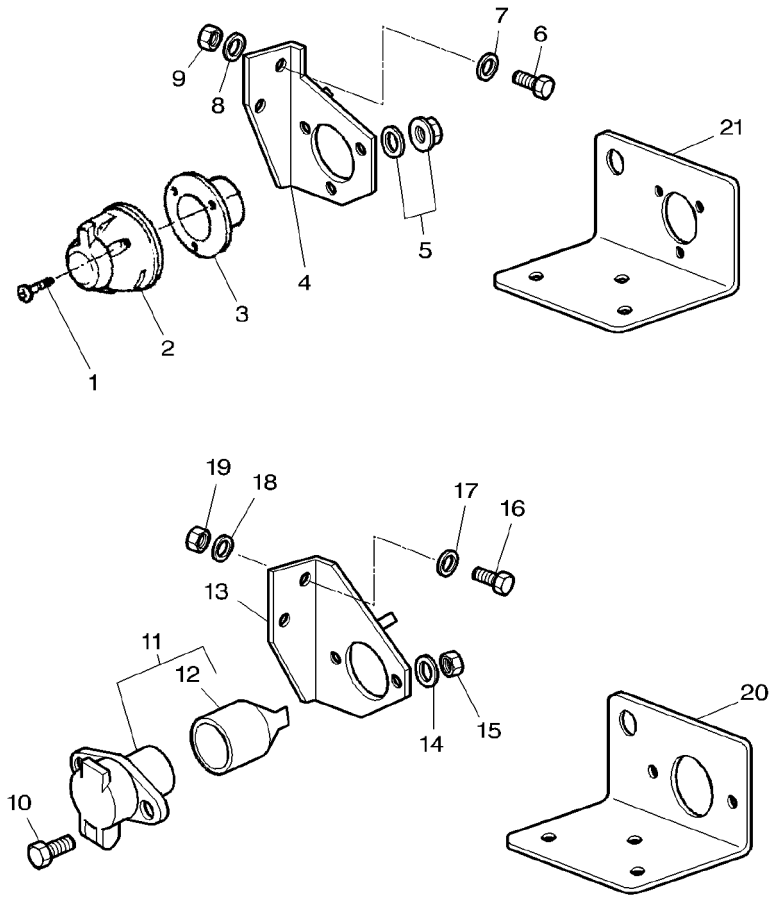

1	3009538X1	M5X35	**3**	SCREW	VIS VITE	SCHRAUBE TORNILLO
2	**409965M1**	(US)	**1**	SOCKET 7 PIN SUP	PRISE 7 BROCHES PRESA DA 7 SUPER	MEHRZW-SCHAUFEL ENCH.7ESPIG SUP
3	3041656M1		**1**	PLATE	PLAQUE PIASTRA	PLATTE PLATO
4	3779126M2	➡ 30-JUN-2000	**1**	SUPPORT	SUPPORT SUPPORTO	LAGERUNG DISPOS.DE SOSTEN
5	3010477X1		**3**	NUT METRIC	ECROU METRIQUE DADO METRICO	MUTTER METRISCH TUERCA METRICO
6	339123X1	➡ 30-JUN-2000 M8X20	**2**	SCREW METRIC	VIS METRIQUE VITE METRICA	SCHRAUBE METR TORNILLO METRICO
7	22428X	➡ 30-JUN-2000	**2**	LOCK WASHER	RONDELLE FREIN ROSETTA ELASTICA	FEDERRING ARANDELA GROWER
8	390972X1		**X**	WASHER METRIC	RONDELLE METR. RONDELLA METRICO	SCHEIBE METRISCH ARANDELA METRICO
9	339169X1		**X**	NUT METRIC	ECROU METRIQUE DADO METRICO	MUTTER METRISCH TUERCA METRICO
10	339123X1	M8X20	**2**	SCREW METRIC	VIS METRIQUE VITE METRICA	SCHRAUBE METR TORNILLO METRICO
11	3715923M91		**1**	INTAKE	PRISE ASPIRAZIONE	SAUGROHR ENTRADA
12	3715925M1	11	**1**	HELMET	CAPUCHON CASCO	SCHUTZHELM CASCO
13	3779127M1	[A] (US)	**1**	SUPPORT	SUPPORT SUPPORTO	LAGERUNG DISPOS.DE SOSTEN
14	339374X1		**2**	LOCK WASHER	RONDELLE FREIN ROSETTA ELASTICA	FEDERRING ARANDELA GROWER
15	339169X1		**2**	NUT METRIC	ECROU METRIQUE DADO METRICO	MUTTER METRISCH TUERCA METRICO
16	339123X1	M8X20	**2**	SCREW METRIC	VIS METRIQUE VITE METRICA	SCHRAUBE METR TORNILLO METRICO
17	22428X		**2**	LOCK WASHER	RONDELLE FREIN ROSETTA ELASTICA	FEDERRING ARANDELA GROWER
18	390972X1		**2**	WASHER METRIC	RONDELLE METR. RONDELLA METRICO	SCHEIBE METRISCH ARANDELA METRICO
19	339169X1		**2**	NUT METRIC	ECROU METRIQUE DADO METRICO	MUTTER METRISCH TUERCA METRICO
20	3783416M1	(US)	**1**	SUPPORT	SUPPORT SUPPORTO	LAGERUNG DISPOS.DE SOSTEN
21	3783417M1	➡ 01-JUL-2000	**1**	SUPPORT	SUPPORT SUPPORTO	LAGERUNG DISPOS.DE SOSTEN

[A] TRACTOR WITH PLATFORM
TRACTEUR AVEC PLATEFORME
SCHLEPPER MIT PLATTFORM
TRATTORE CON PIATTAFORMA
TRACTOR CON PLATAFORMA

Field Lights
Phare De Travail
Arbeitsscheinwerfer
Luce Illuminazione Campo
Luces De Campo

120-40

1-ZW05-001-C

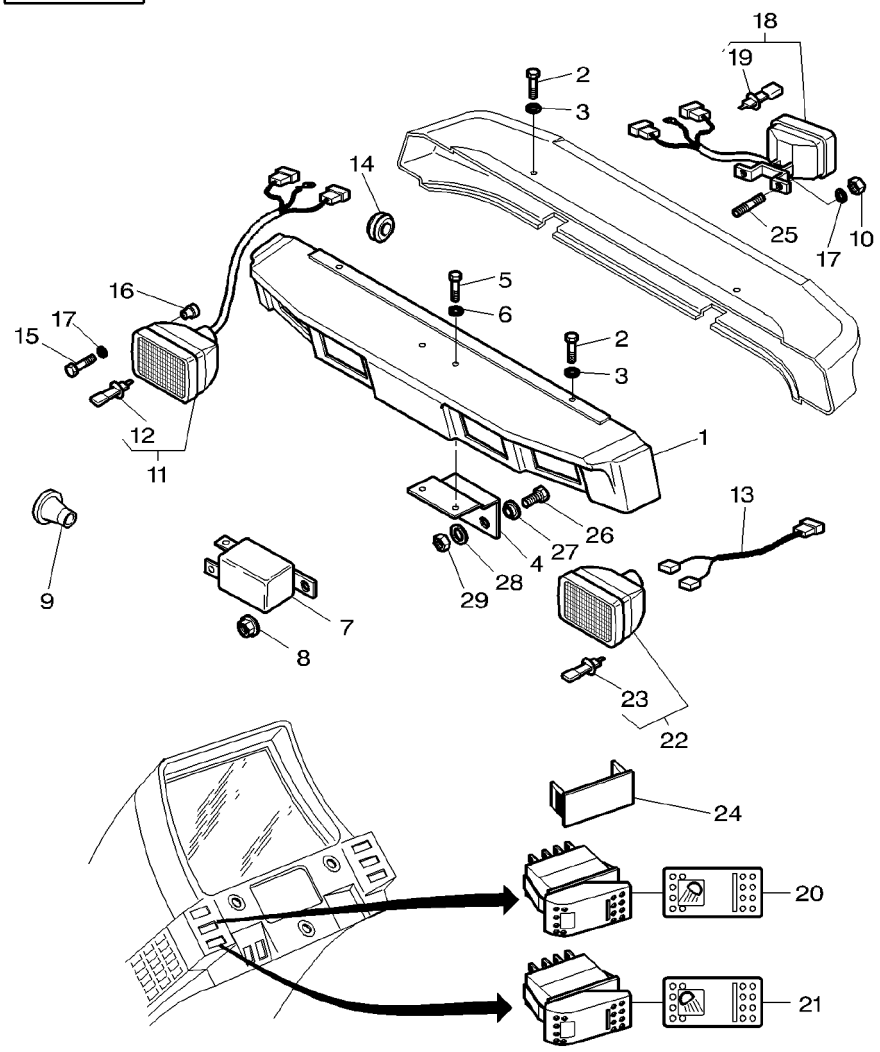

1	3780675M1	[A]	**1**	VISOR	VISIERE PARASOLE	SONNENBLENDE VISERA
1	3780676M1	[B]	**1**	VISOR	VISIERE PARASOLE	SONNENBLENDE VISERA
2	339666X1	M6X20	**4**	SCREW METRIC	VIS METRIQUE VITE METRICA	SCHRAUBE METR TORNILLO METRICO
3	391038X1		**4**	WASHER METRIC	RONDELLE METR. RONDELLA METRICO	SCHEIBE METRISCH ARANDELA METRICO
4	**3714426M1**		**1**	SUPPORT	SUPPORT SUPPORTO	LAGERUNG DISPOS.DE SOSTEN
5	339666X1	M6X20	**2**	SCREW METRIC	VIS METRIQUE VITE METRICA	SCHRAUBE METR TORNILLO METRICO
6	391038X1		**2**	WASHER METRIC	RONDELLE METR. RONDELLA METRICO	SCHEIBE METRISCH ARANDELA METRICO
7	***3615652M1***	12V−25AMP	**X**	RELAY	RELAIS RELE	RELAIS RELE
7	***3387326M2***	12V−50AMP	**X**	RELAY	RELAIS RELE	RELAIS RELE
7	***3387326M2***	12V−50AMP	**X**	RELAY	RELAIS RELE	RELAIS RELE
8	3010477X1		**X**	NUT METRIC	ECROU METRIQUE DADO METRICO	MUTTER METRISCH TUERCA METRICO
9	833062M1		**2**	GROMMET	PASSE FIL GOMMINO	GUMMITUELLE PASACABLE
10	339169X1		**4**	NUT METRIC	ECROU METRIQUE DADO METRICO	MUTTER METRISCH TUERCA METRICO
11	3713132M91	[C]	**2**	HEADLAMP	PHARE AVANT LAMPADA	FAHRSCHEINWERFER FARO DELANTERO
12	***1628494M1***	11	**4**	BULB H3	AMPOULE H3 BULBO H3	GLUEHLAMPE H3 BOMBILLA H3
13	3713339M1		**4**	HARNESS	FAISCEAU FASCIOCAVI	KABELBAUM MAZO CABLES
14	3714694M1	∅ 7/21	**X**	GROMMET	PASSE FIL GOMMINO	GUMMITUELLE PASACABLE
15	3009535X1	M4X30	**8**	SCREW	VIS VITE	SCHRAUBE TORNILLO
16	3713803M1	M4	**8**	NUT	ECROU DADO	MUTTER TUERCA
17	390972X1		**4**	WASHER METRIC	RONDELLE METR. RONDELLA METRICO	SCHEIBE METRISCH ARANDELA METRICO
18	3713130M91	[C]	**2**	LAMP	PHARE LAMPADINA	SCHEINWERFER FARO
19	***1628494M1***	18	**4**	BULB H3	AMPOULE H3 BULBO H3	GLUEHLAMPE H3 BOMBILLA H3
20	***3778391M1***		**1**	SWITCH,INDIRECT	CONTACTEUR INTERRUTTORE IND	KONTAKTSCHALTER CONTACTOR
21	***3780552M1***		**1**	SWITCH,INDIRECT	CONTACTEUR INTERRUTTORE IND	KONTAKTSCHALTER CONTACTOR
22	3713134M91	[EF]	**4**	HEADLAMP	PHARE AVANT LAMPADA	FAHRSCHEINWERFER FARO DELANTERO
22	3713137M1	[G]	**2**	LAMP	PHARE LAMPADINA	SCHEINWERFER FARO

Field Lights
Phare De Travail
Arbeitsscheinwerfer
Luce Illuminazione Campo
Luces De Campo

120-40

1-ZW05-001-C

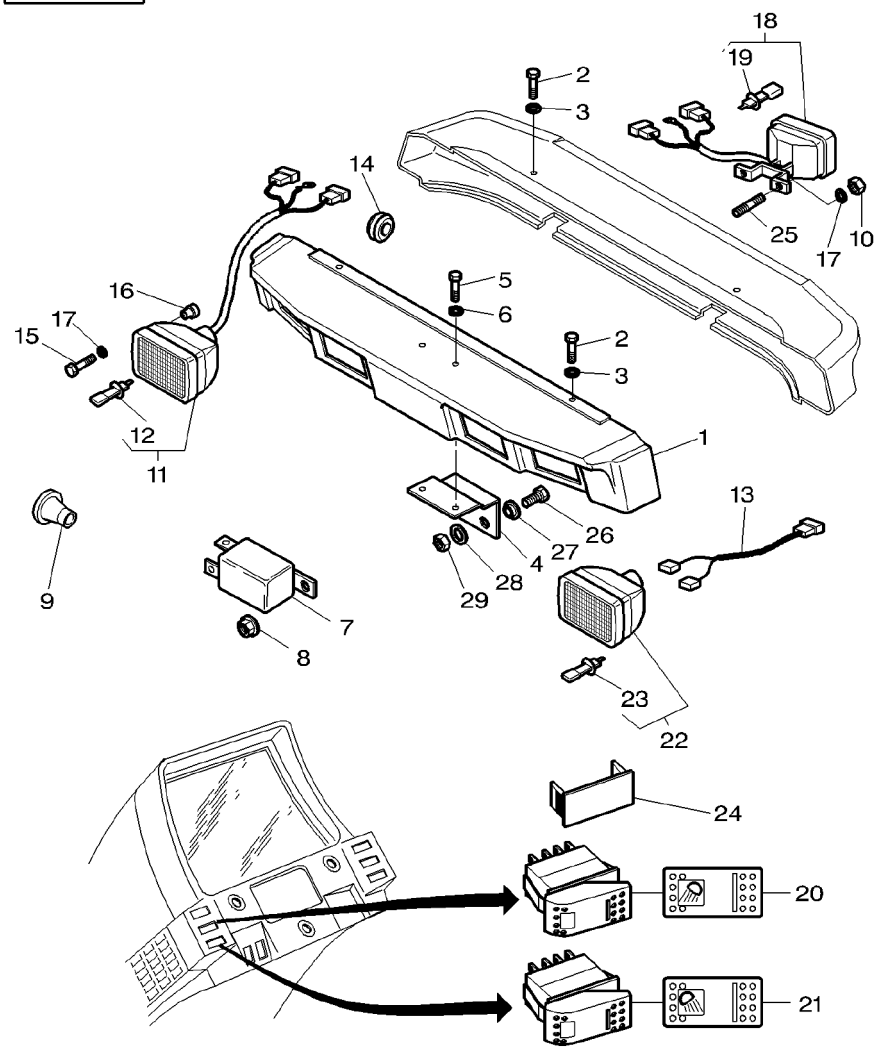

23	***1628494M1***	22 [I]	
23	***3713341M1***	22 [H]	
		H4	
24	3713151M1		
25	1440022X1	M8X20	
26	1441704X1	⇥ H274030	
		M20X40	
26	339124X1	⇥ H274031	
		M8X20	
27	3783380M1	⇥ H274031	
28	3010467X1	⇥ H274031	
29	3009746X1	⇥ H274030	
29	339169X1	⇥ H274031	
		M8	

[A] WITH 4 HEADLAMPS
AVEC 4 PHARES
MIT 4 FAHRSCHEINWERFER
CON 4 FARI
CON 4 FARI

[B] WITH 2 HEADLAMPS
AVEC 2 PHARES
MIT 2 FAHRSCHEINWERFER
CON 2 FARI
CON 2 FARI

[C] WITH 2 BULB WORKLIGHT
PHARES DE TRAVAIL A 2 AMPOULES
ARBEISSCHEINWERFER MIT 2 CLUHLAMPE
LUCE CON 2 BULBOS
LUCES CON 2 BOMBILLAS

[E] WITH 1 BULB WORKLIGHT
PHARES DE TRAVAIL A 1 AMPOULE
ARBEISSCHEINWERFER MIT 1 CLUHLAMPE
LUCE CON 1 BULBOS
LUCES CON 1 BOMBILLAS

[F] INCLUDE ITEM 13
COMPREND L'ITEM 13
BEINHALTET POS NR.13
INCLUDE IL NUMERO 13
INCLUYE EL NO 13

1	BULB H3	AMPOULE H3	GLUEHLAMPE H3
		BULBO H3	BOMBILLA H3
2	BULB	AMPOULE	GLUEHLAMPE
		BULBO	LAMPARA
X	TAP	OBTURATEUR	HAHN
		TAPPO*	GRIFO
4	STUD	GOUJON	STEHBOLZEN
		PRIGIONIERO	ESPARRAGO
2	SCREW METRIC	VIS METRIQUE	SCHRAUBE METR
		VITE METRICA	TORNILLO METRICO
2	SCREW METRIC	VIS METRIQUE	SCHRAUBE METR
		VITE METRICA	TORNILLO METRICO
2	WASHER	RONDELLE	UNTERLEGSCHEIBE
		RONDELLA	ARANDELA
2	WASHER	RONDELLE	UNTERLEGSCHEIBE
		RONDELLA	ARANDELA
2	NUT	ECROU	MUTTER
		DADO	TUERCA
2	NUT METRIC	ECROU METRIQUE	MUTTER METRISCH
		DADO METRICO	TUERCA METRICO

Field Lights
Phare De Travail
Arbeitsscheinwerfer
Luce Illuminazione Campo
Luces De Campo

120-40

1-ZW05-001-C

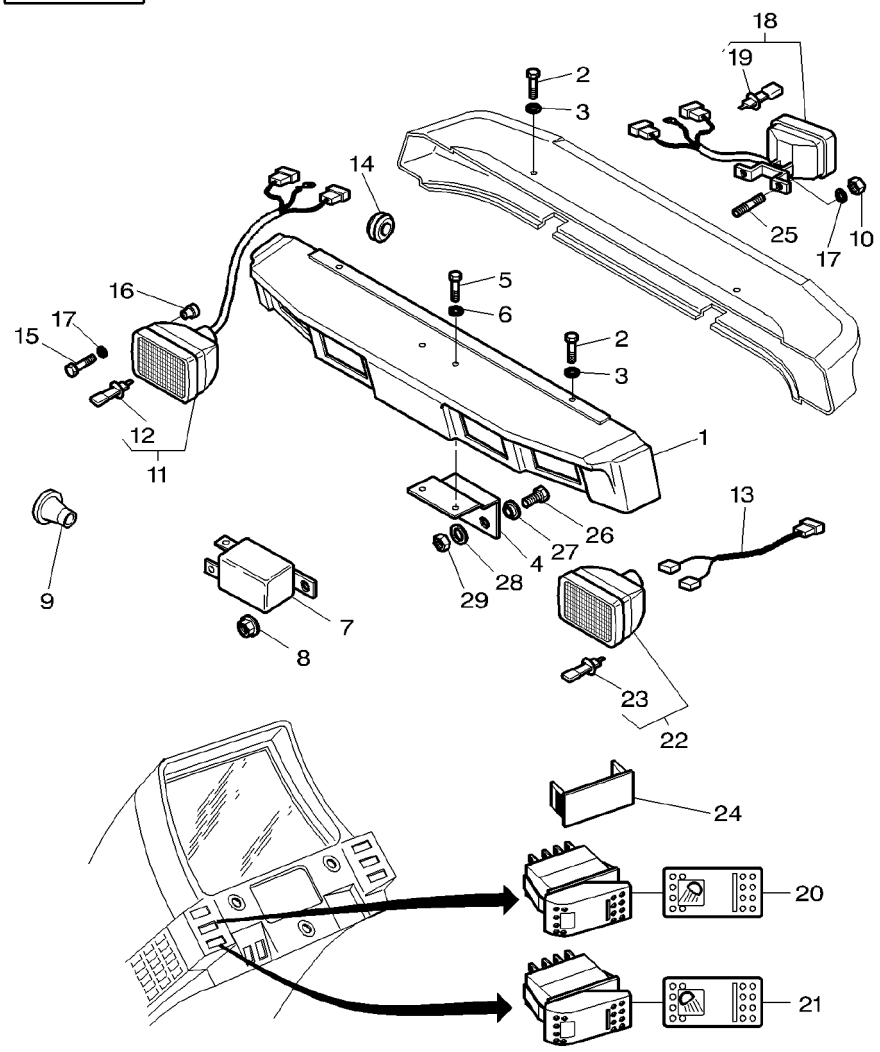

[G] WAY LIGHTS FITTED ON THE CAB ROOF
PHARES DE ROUTE MONTES SUR LE TOIT DE LA CABINE
FAHRSCHEINWERFER AM KABINENDACH MONTIERT
APROJETTORI DE STRADA MONTATO SOPRA IL TETTO DE LA CABINA
FARROS DE CATRETERA SOBRE EL TEJADO DE LA CABINA

[H] USE WITH 3713137M1
UTILISER AVEC 3713137M1
VERWENDEN MIT 3713137M1
USATO CON 3713137M1
USADA CON 3713137M1

[I] USE WITH 3713134M91
UTILISER AVEC 3713134M91
VERWENDEN MIT 3713134M91
USATO CON 3713134M91
USADA CON 3713134M91

Field Lights	With High Visibility Roof
Phare De Travail	Avec Toit Haute Visibilite
Arbeitsscheinwerfer	Mit Dach Mit Sonnendach
Luce Illuminazione Campo	Con Tetto Alta Visibilita
Luces De Campo	Con Tejado Alta Visibilidad

120-45

1-ZW38-001-C

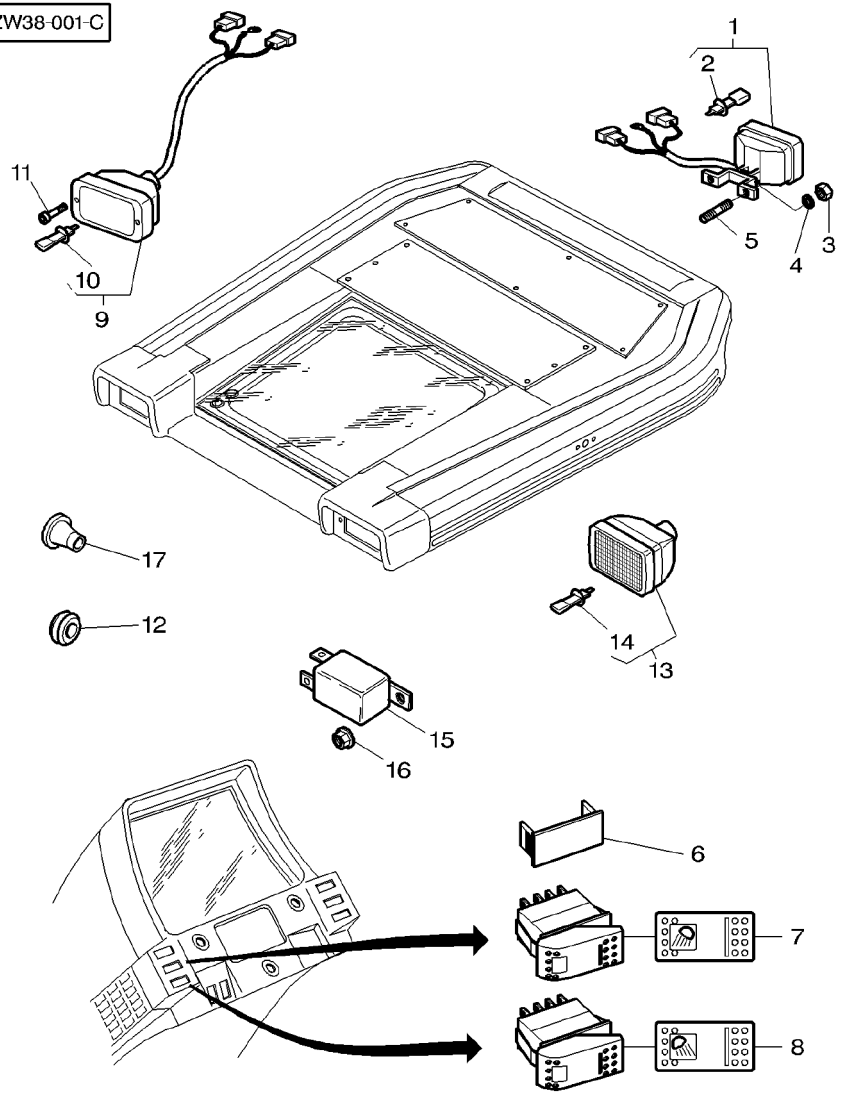

1	3713130M91	[A]		**2**	LAMP	PHARE LAMPADINA	SCHEINWERFER FARO
2	***1628494M1***	1 12V. 55W.		**2**	BULB H3	AMPOULE H3 BULBO H3	GLUEHLAMPE H3 BOMBILLA H3
3	339169X1			**4**	NUT METRIC	ECROU METRIQUE DADO METRICO	MUTTER METRISCH TUERCA METRICO
4	390972X1			**4**	WASHER METRIC	RONDELLE METR. RONDELLA METRICO	SCHEIBE METRISCH ARANDELA METRICO
5	1440022X1			**4**	STUD	GOUJON PRIGIONIERO	STEHBOLZEN ESPARRAGO
6	3713151M1			**1**	TAP	OBTURATEUR TAPPO*	HAHN GRIFO
7	***3778391M1***			**1**	SWITCH,INDIRECT	CONTACTEUR INTERRUTTORE IND	KONTAKTSCHALTER CONTACTOR
8	***3780552M1***			**1**	SWITCH,INDIRECT	CONTACTEUR INTERRUTTORE IND	KONTAKTSCHALTER CONTACTOR
9	3713132M91	[A]		**2**	HEADLAMP	PHARE AVANT LAMPADA	FAHRSCHEINWERFER FARO DELANTERO
10	***1628494M1***	9 12V. 55W.		**2**	BULB H3	AMPOULE H3 BULBO H3	GLUEHLAMPE H3 BOMBILLA H3
11	3010742X1	M4X40		**4**	SCREW METRIC	VIS METRIQUE VITE METRICA	SCHRAUBE METR TORNILLO METRICO
12	3714694M1			**X**	GROMMET	PASSE FIL GOMMINO	GUMMITUELLE PASACABLE
13	3713137M1	[B]		**2**	LAMP	PHARE LAMPADINA	SCHEINWERFER FARO
14	***3713341M1***	13 H4-12V. 55W.		**2**	BULB	AMPOULE BULBO	GLUEHLAMPE LAMPARA
15	***3615652M1***	12V-25Amp.		**X**	RELAY	RELAIS RELE	RELAIS RELE
16	3010477X1	M5		**X**	NUT METRIC	ECROU METRIQUE DADO METRICO	MUTTER METRISCH TUERCA METRICO
17	833062M1			**2**	GROMMET	PASSE FIL GOMMINO	GUMMITUELLE PASACABLE

[A] WITH 2 BULB WORKLIGHT
PHARES DE TRAVAIL A 2 AMPOULES
ARBEISSCHEINWERFER MIT 2 CLUHLAMPE
LUCE CON 2 BULBOS
LUCES CON 2 BOMBILLAS

[B] WAY LIGHTS FITTED ON THE CAB ROOF
PHARES DE ROUTE MONTES SUR LE TOIT DE LA CABINE
FAHRSCHEINWERFER AM KABINENDACH MONTIERT
APROJETTORI DE STRADA MONTATO SOPRA IL TETTO DE LA CABINA
FARROS DE CATRETERA SOBRE EL TEJADO DE LA CABINA

Field Lights
Phare De Travail
Arbeitsscheinwerfer
Luce Illuminazione Campo
Luces De Campo

120-50

1-ZW05-004-A

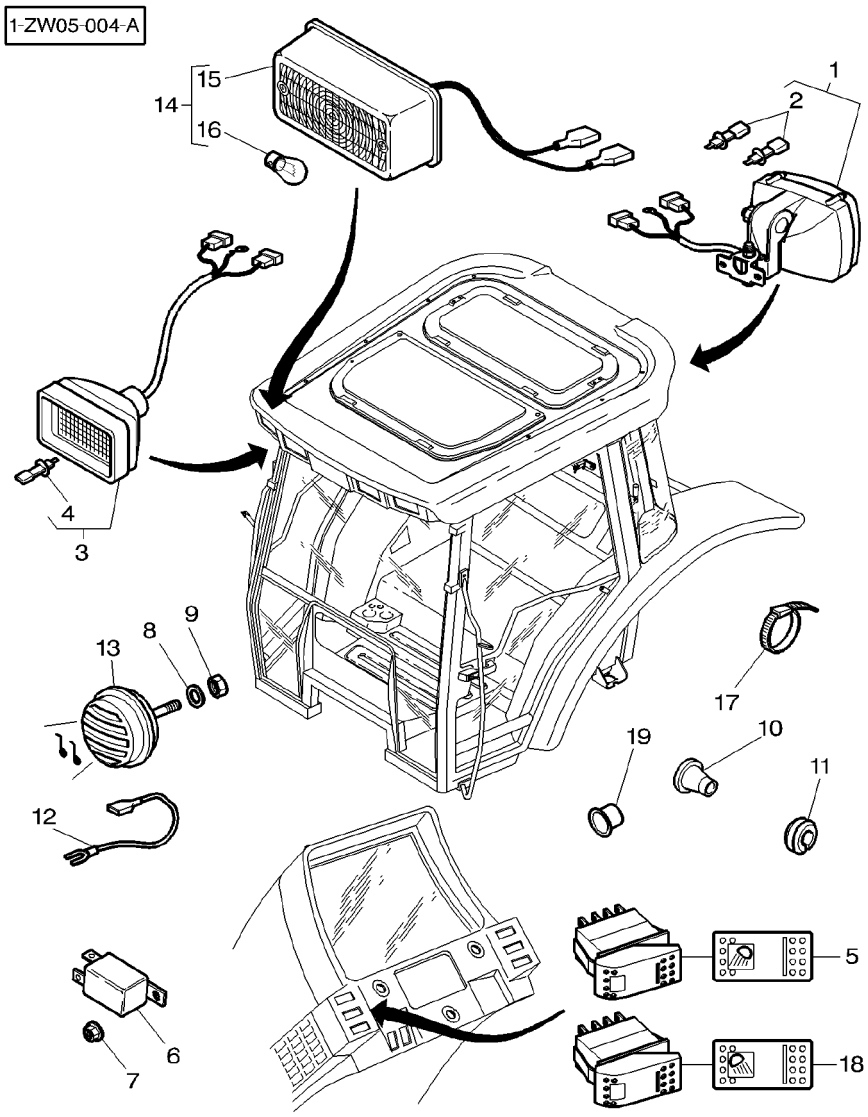

1	3713130M91	[A]	
2	***1628494M1***	1	12V – 55W
3	3713134M91	[B]	
4	***1628494M1***	3	12V – 55W
5	***3778391M1***		
6	***3387326M2***		12V–50A
7	3010477X1		M5
8	1441206X1		
9	339030X1		
10	833062M1		∅ 13/21
11	3714694M1		∅ 7/21
12	3042257M1		
13	1678404M1		
14	***5015739M91***		
15	72501110	14	
16	***70928348***	14	21W
17	3619622M1		
18	***3780552M1***		
19	3713587M1		∅ 22

[A] WITH 2 BULB WORKLIGHT
PHARES DE TRAVAIL A 2 AMPOULES
ARBEISSCHEINWERFER MIT 2 CLUHLAMPE
LUCE CON 2 BULBOS
LUCES CON 2 BOMBILLAS

[B] WITH 1 BULB WORKLIGHT
PHARES DE TRAVAIL A 1 AMPOULE
ARBEISSCHEINWERFER MIT 1 CLUHLAMPE
LUCE CON 1 BULBOS
LUCES CON 1 BOMBILLAS

2	LAMP	PHARE LAMPADINA	SCHEINWERFER FARO
2	BULB H3	AMPOULE H3 BULBO H3	GLUEHLAMPE H3 BOMBILLA H3
2	HEADLAMP	PHARE AVANT LAMPADA	FAHRSCHEINWERFER FARO DELANTERO
1	BULB H3	AMPOULE H3 BULBO H3	GLUEHLAMPE H3 BOMBILLA H3
1	SWITCH,INDIRECT	CONTACTEUR INTERRUTTORE IND	KONTAKTSCHALTER CONTACTOR
2	RELAY	RELAIS RELE	RELAIS RELE
2	NUT METRIC	ECROU METRIQUE DADO METRICO	MUTTER METRISCH TUERCA METRICO
1	LOCK WASHER	RONDELLE FREIN ROSETTA ELASTICA	FEDERRING ARANDELA GROWER
1	NUT METRIC	ECROU METRIQUE DADO METRICO	MUTTER METRISCH TUERCA METRICO
2	GROMMET	PASSE FIL GOMMINO	GUMMITUELLE PASACABLE
3	GROMMET	PASSE FIL GOMMINO	GUMMITUELLE PASACABLE
1	EARTH STRAP	FIL DE MASSE CAVO MASSA	MASSELEITUNG CABLE DE MASA
1	HORN	AVERTISSEUR CLACSON	HUPE BOCINA
2	HEADLAMP	PHARE AVANT LAMPADA	FAHRSCHEINWERFER FARO DELANTERO
1	LENS	LENTILLE LENTE	LINSE LENTE
1	BULB P/LAMP	LAMPE BULBO E LAMPADA	GLUEHL.ARB.SCH. BOMB LAMP.PILOTO
X	CABLE TIE	ATTACHE CABLE FASCETTA CAVI	KABELBINDER ENLACE DE CABLE
1	SWITCH,INDIRECT	CONTACTEUR INTERRUTTORE IND	KONTAKTSCHALTER CONTACTOR
2	PLUG	BOUCHON TAPPO	VERSCHL.STOPFEN TAPON

Working Light
Phare De Travail
Arbeitsscheinwerfer
Luce Illuminazione Campo
Luce De Campo

Platform With Pillars
Plateforme Avec Piliers
Plattform Mit Pfosten
Piattaforma Con Montanti
Plataforma Con Montantes

120-55

1-ZS28-001-B

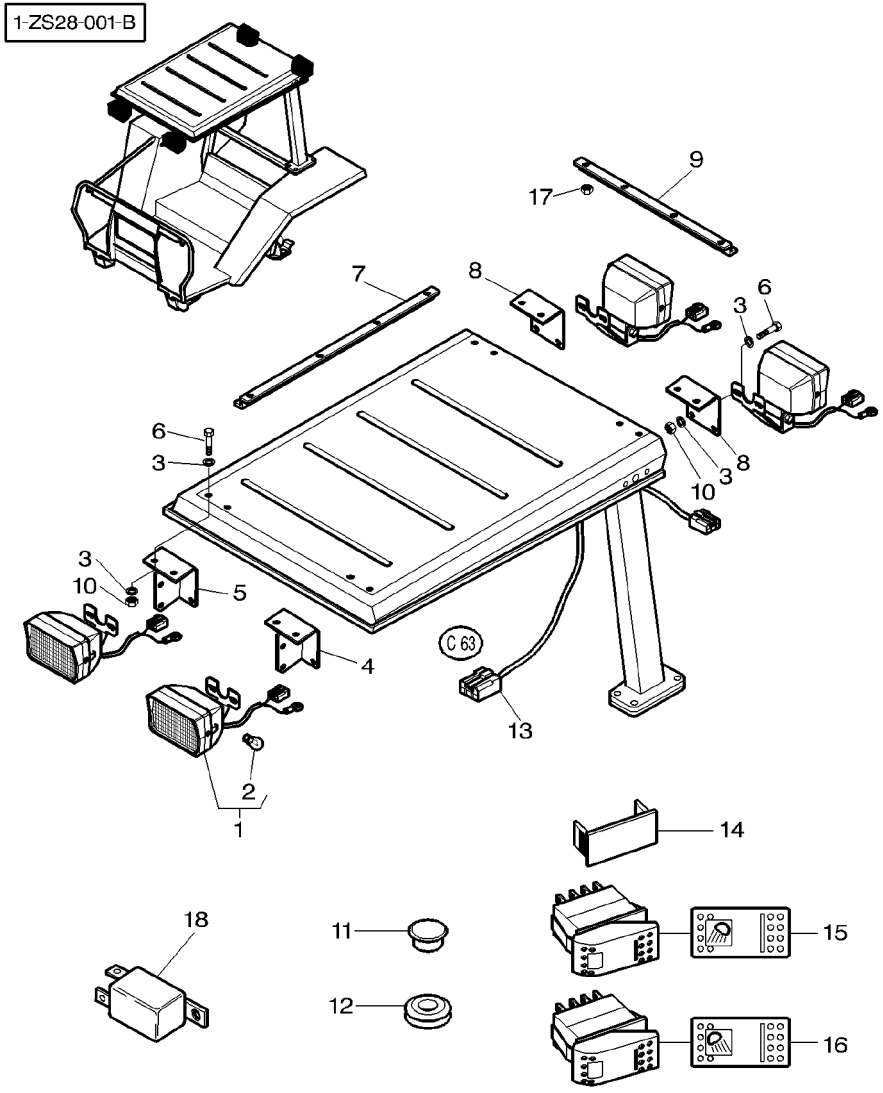

1	**3617494M91**		
2	***1628494M1***	1	12V−55W
3	390972X1		
3	3010597X1		
4	3779516M1		◀
5	3779517M1		▶
6	339123X1		M8X20
7	3777984M1		
8	3778627M1		
9	3777985M1		
10	3010572X1		M8
11	3042523M1		[A] ∅ 10MM
12	3388889M1		
13	3779530M1		[AB]
14	3713151M1		[A]
15	***3778391M1***		[C]
16	***3780552M1***		[D]
17	3010477X1		M5
18	***3387326M2***		12V−50Amp
18	***3615652M1***		12V−25Amp

[A] WITHOUT WORKLIGHT
SANS FEUX DE TRAVAIL
OHNE ARBEITSSCHEINWERFER
SENSA ILLUMINAZIONE CAMPO
SIN LUCES DE CAMPO

[B] ROTATING LIGHT
GYROPHARE
SUCHERLEUCHT
GIROPHARO
GIROFARO

4	LAMP	PHARE LAMPADINA	SCHEINWERFER FARO
1	BULB H3	AMPOULE H3 BULBO H3	GLUEHLAMPE H3 BOMBILLA H3
16	WASHER METRIC	RONDELLE METR. RONDELLA METRICO	SCHEIBE METRISCH ARANDELA METRICO
16	TAB WASHER	RONDELLE EVENT PIASTRINA SICUR	SICHERUNGSBLECH ARANDELA ALETA
1	SUPPORT	SUPPORT SUPPORTO	LAGERUNG DISPOS.DE SOSTEN
1	SUPPORT	SUPPORT SUPPORTO	LAGERUNG DISPOS.DE SOSTEN
16	SCREW METRIC	VIS METRIQUE VITE METRICA	SCHRAUBE METR TORNILLO METRICO
2	ANGLEPIECE	CORNIERE ANGOLARE	WINKELEISEN PIEZA ANGULAR
2	SUPPORT	SUPPORT SUPPORTO	LAGERUNG DISPOS.DE SOSTEN
1	ANGLEPIECE	CORNIERE ANGOLARE	WINKELEISEN PIEZA ANGULAR
16	NUT	ECROU DADO	MUTTER TUERCA
8	PLUG	BOUCHON TAPPO	VERSCHL.STOPFEN TAPON
4	GROMMET	PASSE FIL GOMMINO	GUMMITUELLE PASACABLE
1	HARNESS	FAISCEAU FASCIOCAVI	KABELBAUM MAZO CABLES
2	TAP	OBTURATEUR TAPPO*	HAHN GRIFO
1	SWITCH,INDIRECT	CONTACTEUR INTERRUTTORE IND	KONTAKTSCHALTER CONTACTOR
1	SWITCH,INDIRECT	CONTACTEUR INTERRUTTORE IND	KONTAKTSCHALTER CONTACTOR
12	NUT METRIC	ECROU METRIQUE DADO METRICO	MUTTER METRISCH TUERCA METRICO
1	RELAY	RELAIS RELE	RELAIS RELE
3	RELAY	RELAIS RELE	RELAIS RELE

Working Light **Phare De Travail** **Arbeitsscheinwerfer** **Luce Illuminazione Campo** **Luce De Campo**	**Platform With Pillars** **Plateforme Avec Piliers** **Plattform Mit Pfosten** **Piattaforma Con Montanti** **Plataforma Con Montantes**	**120-55**

1-ZS28-001-B

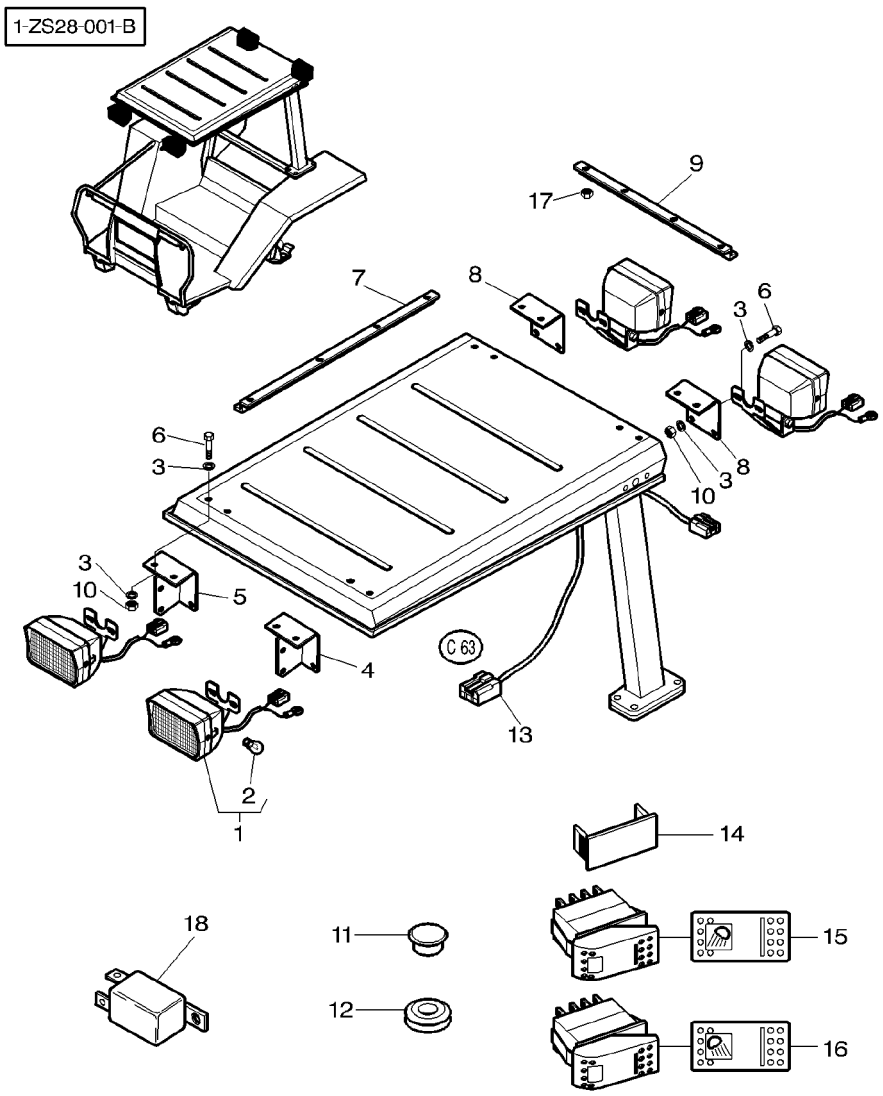

[C] FRONT
AVANT
VORN
ANTERIORE
DELANTERO

[D] REAR
ARRIERE
HINTEN
POSTERIORE
TRASERO

Field Lights
Phare De Travail
Arbeitsscheinwerfer
Luce Illuminazione Campo
Luces De Campo

120-60

Guideway / Footsteps / Fenders
Rambarde / Marchepieds / Ailes
Fuehrungsschiene / Tritjbretter / Kotfluegel
Rotia / Pedana / Parafanghi
Riel De Guia / Estribos / Guardabarros

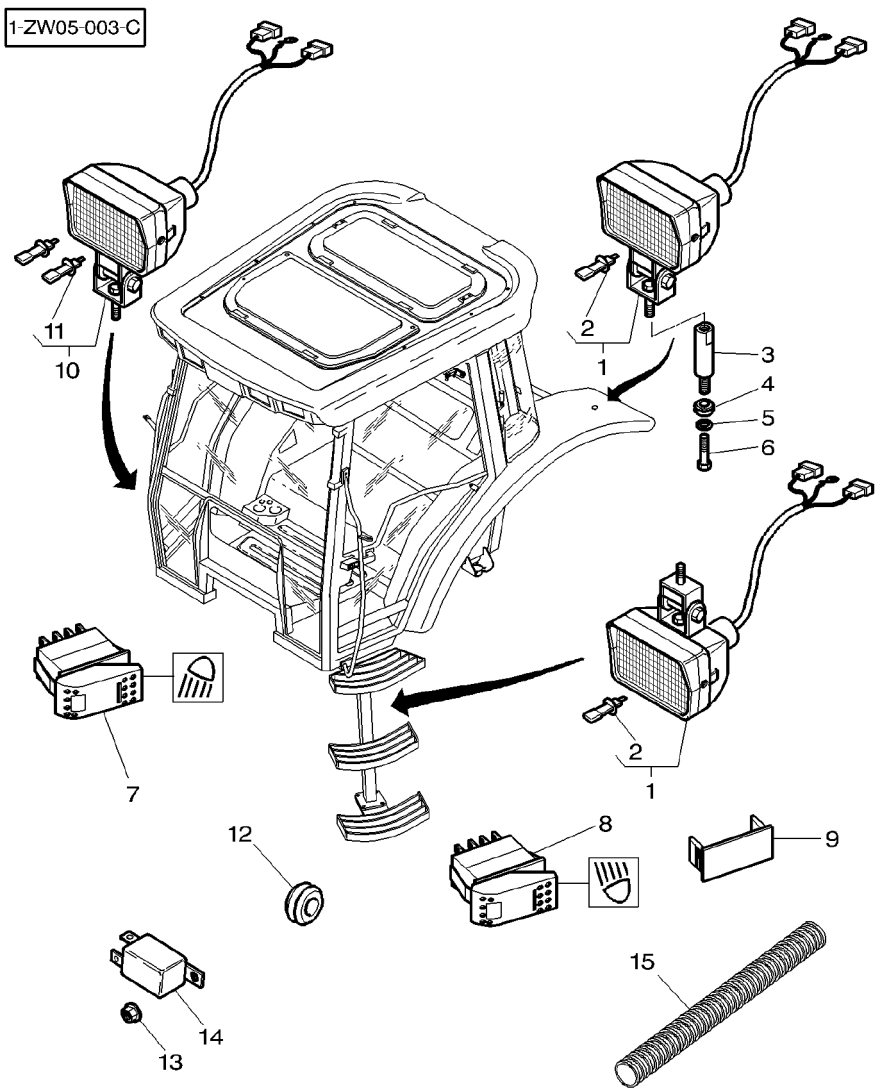

1	***3714399M92***	[C]	
2	***1628494M1***	1	12V − 55W
3	5016887M2	➡	H279035
4	70921230	∅	25−35
5	390734X1	➡|	H279034
6	3009491X1	➡|	H279034 M10X20
7	***3778391M1***		
8	3780553M1		
9	3713151M1		
10	***3778456M92***	[A]	
11	***1628494M1***	10	12V − 55W
12	367439X1	∅	15−25
13	339030X1	M6	
14	***3615652M1***	12V − 25AMP	
15	5016845M1	➡	J168024

[A] WITH 2 BULB WORKLIGHT
PHARES DE TRAVAIL A 2 AMPOULES
ARBEISSCHEINWERFER MIT 2 CLUHLAMPE
LUCE CON 2 BULBOS
LUCES CON 2 BOMBILLAS

[C] WITH 1 BULB WORKLIGHT
PHARES DE TRAVAIL A 1 AMPOULE
ARBEISSCHEINWERFER MIT 1 CLUHLAMPE
LUCE CON 1 BULBOS
LUCES CON 1 BOMBILLAS

6	LAMP	PHARE LAMPADINA	SCHEINWERFER FARO
2	BULB H3	AMPOULE H3 BULBO H3	GLUEHLAMPE H3 BOMBILLA H3
2	SPACER	ENTRETOISE DISTANZIALE	ABSTANDSTUECK PIEZA DISTANCIA
2	GROMMET	PASSE FIL GOMMINO	GUMMITUELLE PASACABLE
2	WASHER METRIC	RONDELLE METR. RONDELLA METRICO	SCHEIBE METRISCH ARANDELA METRICO
2	BOLT METRIC	BOULON METRIQUE BULLONE METRICO	MASCH.SCHRB MET PERNO METRICO
1	SWITCH,INDIRECT	CONTACTEUR INTERRUTTORE IND	KONTAKTSCHALTER CONTACTOR
1	SWITCH,INDIRECT	CONTACTEUR INTERRUTTORE IND	KONTAKTSCHALTER CONTACTOR
X	TAP	OBTURATEUR TAPPO*	HAHN GRIFO
2	LIGHT	FEU FARO	LEUCHTE ALUMBRADO
2	BULB H3	AMPOULE H3 BULBO H3	GLUEHLAMPE H3 BOMBILLA H3
2	GROMMET	PASSE FIL GOMMINO	GUMMITUELLE PASACABLE
2	NUT METRIC	ECROU METRIQUE DADO METRICO	MUTTER METRISCH TUERCA METRICO
1	RELAY	RELAIS RELE	RELAIS RELE
1	SHEATH	GAINE GUAINA	HUELLE FUNDA

Rotating Light
Gyrophare
Rundumkennleucht
Luce Rotativa
Luz Giratoria

120-65

1-ZW11-003-A

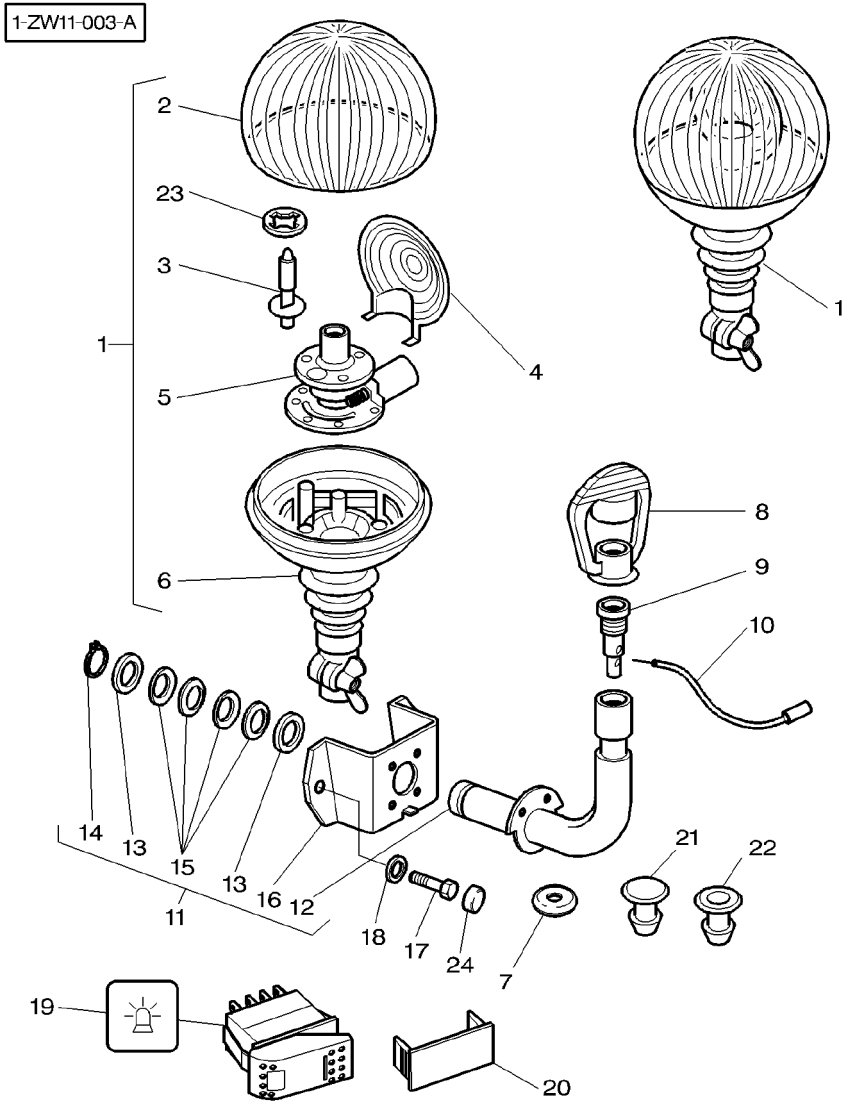

1	3715144M92		
2	3902469M1	1	
3	***3405180M1***	1	
4	3900282M1	1	
5	3900285M1	1	
6		1	REF. NO1
7	3714694M1		
8	3617859M1		
9	3617860M1		
10	**3713260M1**		
11	3778093M91		
12	3778023M1	11	
13	3778025M1	11	∅ 45MM
14	3006699X1	11	
15	3778094M1	11	
16	3778024M1	11	
17	339123X1		M8X20
18	390972X1		
19	***3713146M1***		
20	3713151M1		[A]
21	3713404M1		
22	3713405M2		
23	3900281M1	1	
24	3616277M1		

1	TURNING LIGHT	FEU TOURNANT LUCE ROTANTE	RUNDUMLEUCHTE LUZ ROTATORIA
1	LENS	LENTILLE LENTE	LINSE LENTE
1	BULB	AMPOULE BULBO	GLUEHLAMPE LAMPARA
1	REFLECTINGMIRROR	REFLECTEUR SPECCHIO RIFLET.	SPIEGELREFLEKTOR ESPEJO DE REFLEX
1	ENGINE	MOTEUR MOTORE	MOTOR MOTOR
1	SUPPORT	SUPPORT SUPPORTO	LAGERUNG DISPOS.DE SOSTEN
2	GROMMET	PASSE FIL GOMMINO	GUMMITUELLE PASACABLE
1	HELMET	CAPUCHON CASCO	SCHUTZHELM CASCO
1	INTAKE	PRISE ASPIRAZIONE	SAUGROHR ENTRADA
1	WIRE	FIL FILO DI FERRO	DRAHT HILO
1	SUPPORT	SUPPORT SUPPORTO	LAGERUNG DISPOS.DE SOSTEN
1	TUBE	TUBE TUBO	ROHR TUBO
2	WASHER	RONDELLE RONDELLA	UNTERLEGSCHEIBE ARANDELA
1	CLIP	CLIP FERMAGLIO	SCHELLE CRAPA RETEN
4	WASHER	RONDELLE RONDELLA	UNTERLEGSCHEIBE ARANDELA
2	SUPPORT	SUPPORT SUPPORTO	LAGERUNG DISPOS.DE SOSTEN
4	SCREW METRIC	VIS METRIQUE VITE METRICA	SCHRAUBE METR TORNILLO METRICO
4	WASHER METRIC	RONDELLE METR. RONDELLA METRICO	SCHEIBE METRISCH ARANDELA METRICO
1	SWITCH,INDIRECT	CONTACTEUR INTERRUTTORE IND	KONTAKTSCHALTER CONTACTOR
1	TAP	OBTURATEUR TAPPO*	HAHN GRIFO
1	PLUG	BOUCHON TAPPO	VERSCHL.STOPFEN TAPON
1	GROMMET	PASSE FIL GOMMINO	GUMMITUELLE PASACABLE
1	BUSH	BAGUE BOCCOLA	BUCHSE CASQUILLO
4	HELMET	CAPUCHON CASCO	SCHUTZHELM CASCO

Rotating Light
Gyrophare
Rundumkennleucht
Luce Rotativa
Luz Giratoria

120-65

1-ZW11-003-A

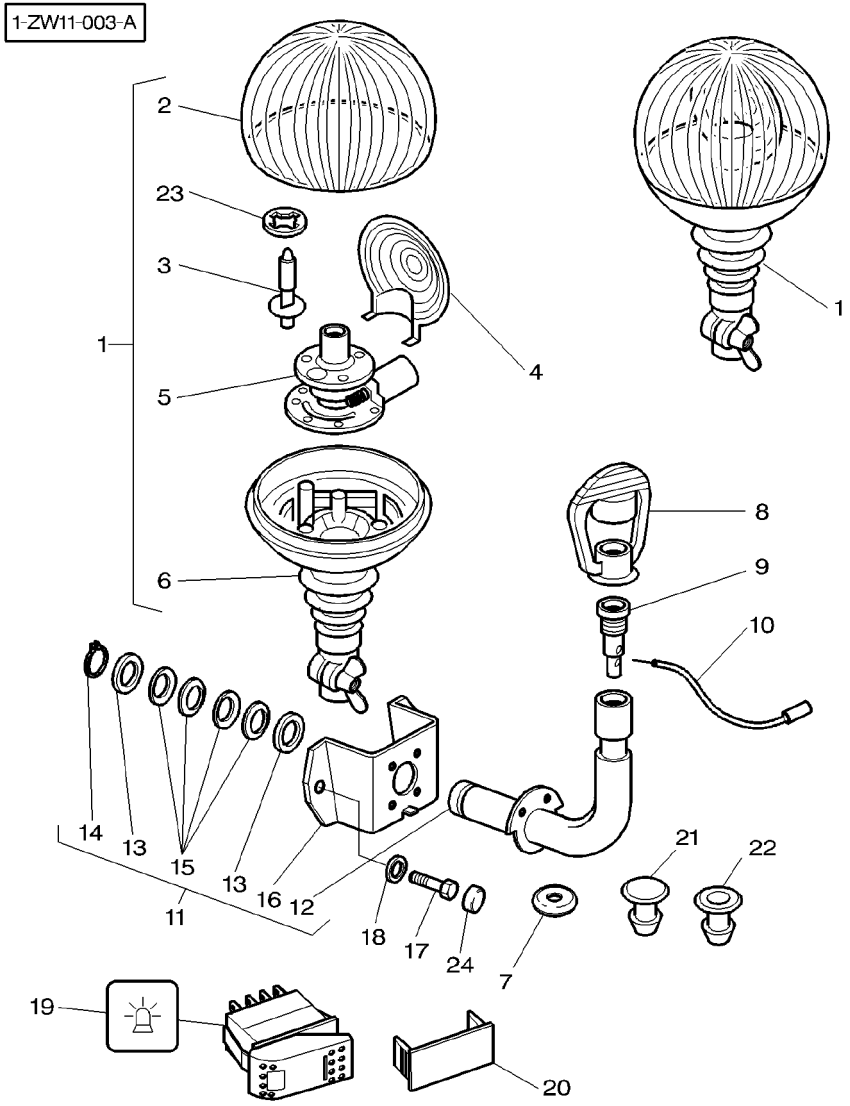

[A] WITHOUT ROTATING LIGHT
SANS GYROPHARE
OHNE SUCHERLEUCHT
SENZA GIROPHARO
SIN GIROFARO

130

Fitting 8 Screws
Fixation Par 8 Vis
Anbau Der 8 Schrauben
Montaggio Con 8 Viti
Fijacion Con 8 Tornillos

1-ZL02-001-A

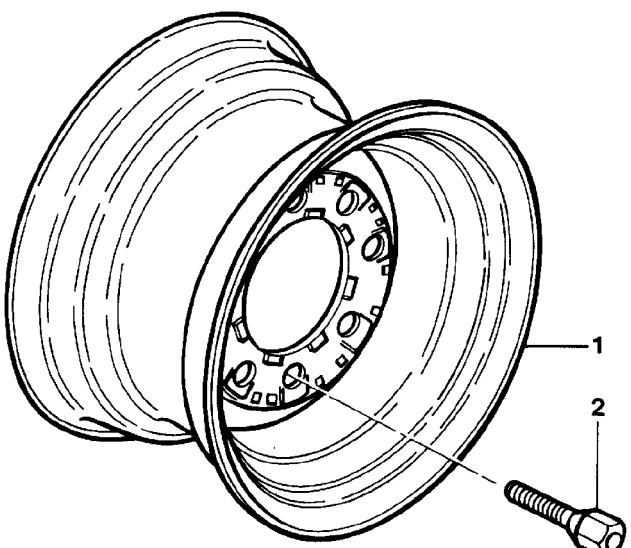

1	1614384M1	[AB] W8 X 16"	**2**	WHEEL	ROUE RUOTA	RAD RUEDA
1	1614385M1	W11X16"	**2**	RIM	JANTE CERCHIONE	FELGE LLANTA
2	1823598M1	M16	**16**	SCREW METRIC	VIS METRIQUE VITE METRICA	SCHRAUBE METR TORNILLO METRICO

[A] USED WITH 11.00" X 16" TYRES
UTILISE AVEC PNEUS 11.00" X 16"
NUR FUER REIFEN 11.00" X 16"
USARE CON PNEUMATICOS 11.00" X 16"
USAR CON NEUMATICOS 11.00" X 16"

[B] USED WITH 10.00" X 16" TYRES
UTILISE AVEC PNEUS 10.00" X 16"
NUR FUER REIFEN 10.00" X 16"
USARE CON PNEUMATICOS 10.00" X 16"
USAR CON NEUMATICOS 10.00" X 16"

1-ZL03-006-A

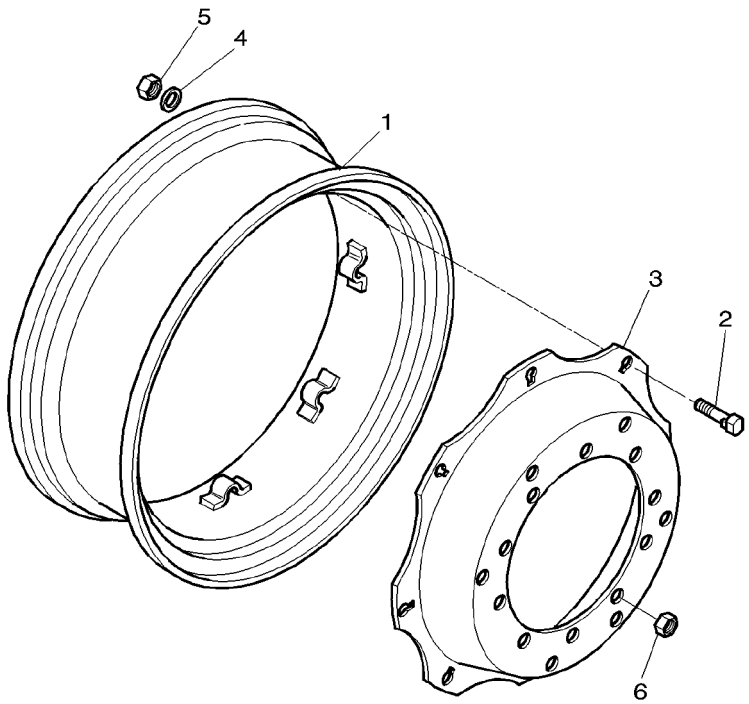

1	3714786M1	15x30	**2**	RIM	JANTE CERCHIONE	FELGE LLANTA
2	3384620M1	M16X80	**16**	SCREW SPECIAL	VIS SPECIALE VITE SPECIALE	SPEZIALSCHRAUBE TORNILLO ESPEC.
3	3712590M1	30"	**2**	DISC	DISQUE DISCO	SCHEIBE DISCO
4	338577X1		**16**	WASHER	RONDELLE RONDELLA	UNTERLEGSCHEIBE ARANDELA
5	1440231X1	M16X1,5	**16**	NUT METRIC	ECROU METRIQUE DADO METRICO	MUTTER METRISCH TUERCA METRICO
6	***3712611M2***	M22X1,5	**20**	NUT SPECIAL	ECROU SPECIAL DADO SPECIALE	SPEZIALMUTTER TUERCA ESPECIAL

Front Wheels	4 Wheel Drive	130-15	Sirmac
Roues Avant	4 Roues Motrices		Sirmac
Vorderraeder	Allradantrieb		Sirmac
Ruote Anteriori	4 Ruote Motrici		Sirmac
Ruedas Delanteras	4 Ruedas Motrices		Sirmac

1-ZL03-005-A

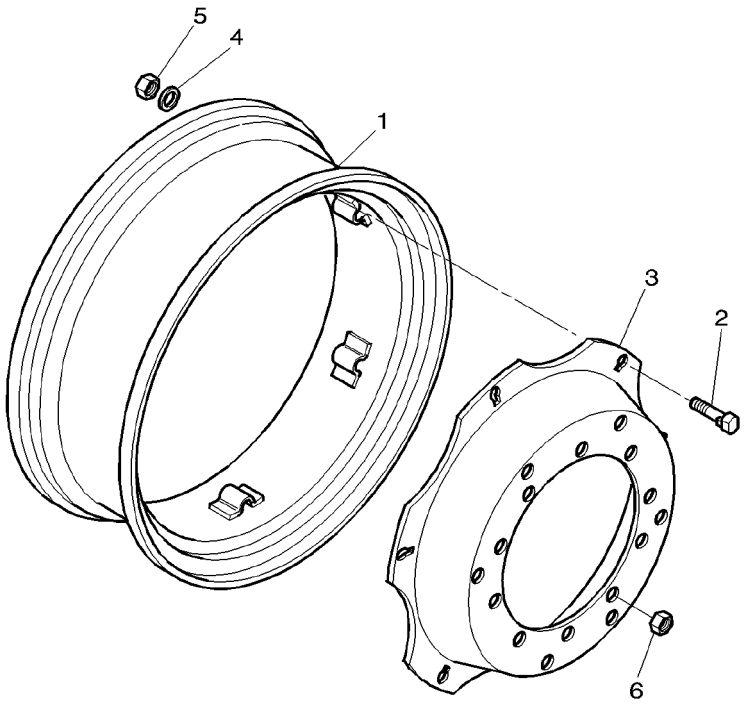

1	3583099M2	[EC] W12 X 28"	**2**	RIM	JANTE CERCHIONE	FELGE LLANTA
1	**3581857M2**	[AC] W12 X 28"	**2**	RIM	JANTE CERCHIONE	FELGE LLANTA
1	3583347M2	[EG] W14 X 28"	**2**	RIM	JANTE CERCHIONE	FELGE LLANTA
1	3581859M2	[AG] W 14 X 28"	**2**	RIM	JANTE CERCHIONE	FELGE LLANTA
1	3714784M1	[AH] W15L X 28"	**2**	RIM	JANTE CERCHIONE	FELGE LLANTA
2	3384620M1	M16X80	**X**	SCREW SPECIAL	VIS SPECIALE VITE SPECIALE	SPEZIALSCHRAUBE TORNILLO ESPEC.
3	3712578M1	[A] 28"	**2**	DISC	DISQUE DISCO	SCHEIBE DISCO
3	3712587M1	[E] 28"	**2**	DISC	DISQUE DISCO	SCHEIBE DISCO
4	338577X1		**X**	WASHER	RONDELLE RONDELLA	UNTERLEGSCHEIBE ARANDELA
5	1440231X1		**X**	NUT METRIC	ECROU METRIQUE DADO METRICO	MUTTER METRISCH TUERCA METRICO
6	***3712611M2***	M22	**20**	NUT SPECIAL	ECROU SPECIAL DADO SPECIALE	SPEZIALMUTTER TUERCA ESPECIAL

[A] 6 BRIDGE PIECES
6 PONTETS
6 TRAVERSE
6 TRAVERSA PONTI
6 CODO DE CRUCE

[C] USED WITH 13.6−14.9−340/85−380/70−380/85−420/70−44 0/65−480/65 X 28" TYRES
UTILISE AVEC PNEUS 13.6−14.9−340/85−380/70−380/85 −420/70−440/65−480/65 X 28"
TRAKTOR MIT REIFEN 13.6−14.9−340/85−380/70−380/85− 420/70−440/65−480/65 X 28"
USATO CON PNEUMATICI 13.6−14.9−340/85−380/70−380/8 5−420/70−440/65−480/65 X 28"
SE USA CON NEUMATICOS 13.6−14.9−340/85−380/70−380/ 85−420/70−440/65−480/65 X 28"

[E] 8 BRIDGE PIECES
8 PONTETS
8 TRAVERSE
8 TRAVERSA PONTI
8 CODO DE CRUSES

[G] USED WITH−16.9−420/70−440/65−480/65−480/70−540/65 X 28" TYRES
UTILISE AVEC PNEUS−16.9−420/70−440/65−480/65−480/7 0−540/65 X 28"
TRAKTOR MIT REIFEN−16.9−420/70−440/65−480/65−480/7 0−540/65 X 28"
USATO CON PNEUMATICI−16.9−420/70−440/65−480/65−480 /70−540/65 X 28"
SE USA CON NEUMATICOS−16.9−420/70−440/65−480/65−48 0/70−540/65 X 28"

[H] USED WITH 480/65−480/70−540/65 X 28" TYRES
UTILISE AVEC PNEUS 480/65−480/70−540/65 X 28"
TRAKTOR MIT REIFEN 480/65−480/70−540/65 X 28" −
USATO CON PNEUMATICI 480/65−480/70−540/65 X 28"
SE USA CON NEUMATICOS 480/65−48070−540/65 X 28"

1-ZL03-004-A

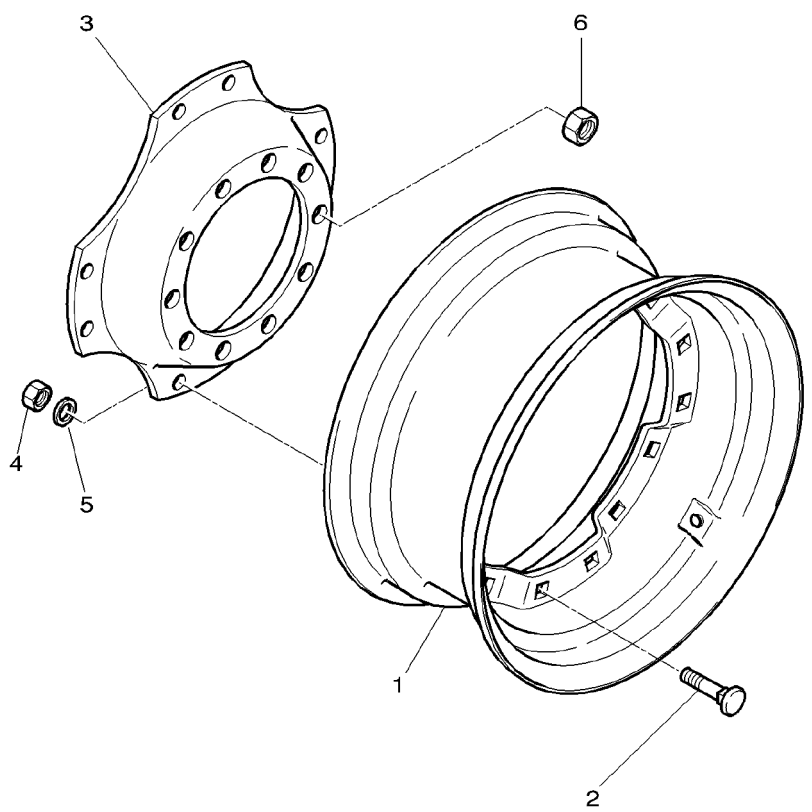

1	72508983	28’X12’	**2** RIM	JANTE CERCHIONE	FELGE LLANTA
1	72508984	28’X15’	**2** RIM	JANTE CERCHIONE	FELGE LLANTA
1	72508986	30’X13’	**2** RIM	JANTE CERCHIONE	FELGE LLANTA
1	72508987	30’X15’	**2** RIM	JANTE CERCHIONE	FELGE LLANTA
1	72506345	34’X13’	**2** RIM	JANTE CERCHIONE	FELGE LLANTA
2	72506938		**16** BOLT	BOULON BULLONE	MASCH.SCHRAUBE PERNO
3	72508990	28’X12’–28’X15’ 30’X13’–30’X15’	**2** DISC	DISQUE DISCO	SCHEIBE DISCO
3	72506343	34’X10’–34’X13’	**2** DISC	DISQUE DISCO	SCHEIBE DISCO
4	70950947		**16** NUT	ECROU DADO	MUTTER TUERCA
5	338577X1		**16** WASHER	RONDELLE RONDELLA	UNTERLEGSCHEIBE ARANDELA
6	***3712611M2***		**20** NUT SPECIAL	ECROU SPECIAL DADO SPECIALE	SPEZIALMUTTER TUERCA ESPECIAL

1-ZL03-007-A

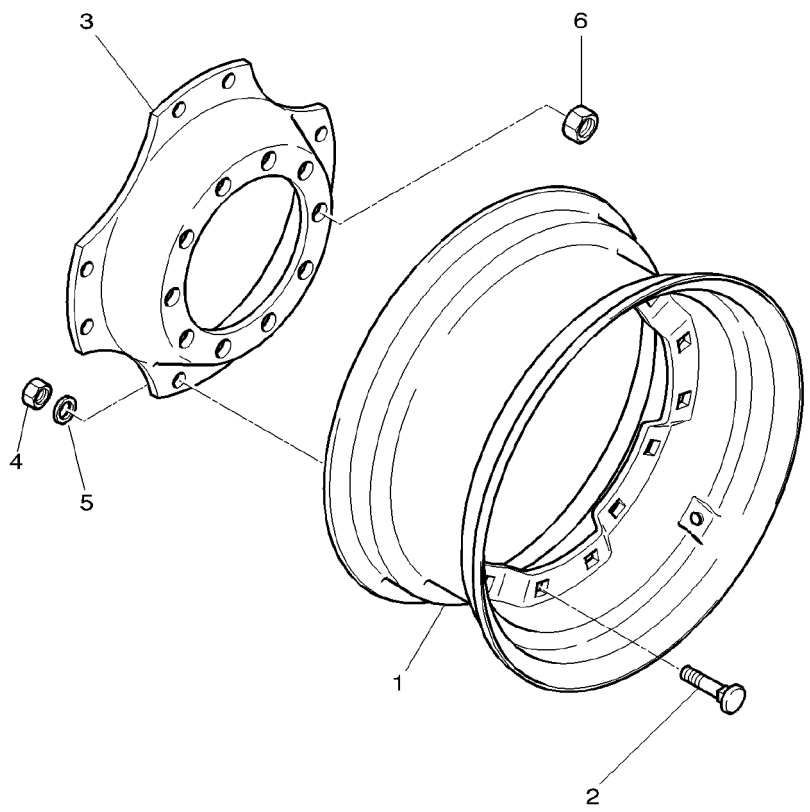

1	3903222M1	WD18LX28"	**2**	RIM	JANTE CERCHIONE FELGE LLANTA
2	3903220M1		**16**	SCREW	VIS VITE SCHRAUBE TORNILLO
3	3903221M1		**2**	FLANGE	FLASQUE FLANGIA FLANSCH PLETINA
4	3903218M1		**16**	NUT SPECIAL	ECROU SPECIAL DADO SPECIALE SPEZIALMUTTER TUERCA ESPECIAL
5	3903219M1		**16**	WASHER	RONDELLE RONDELLA UNTERLEGSCHEIBE ARANDELA
6	***3712611M2***		**20**	NUT SPECIAL	ECROU SPECIAL DADO SPECIALE SPEZIALMUTTER TUERCA ESPECIAL

Front Axle 4 Wheel Drive	**Mudguards And Supports**
Essieu Avant 4 Roues Motrices	**Garde Boue Et Supports**
Vorderachse−4wd	**Radabdeckung Mit Stutze**
Assale Anteriore 4 Ruote Motrici	**Parafanghi E Supporto**
Doble Traccion De Eje Frontal	**Guardabarros Y Soporte**

130-30

1-ZK14-003-B

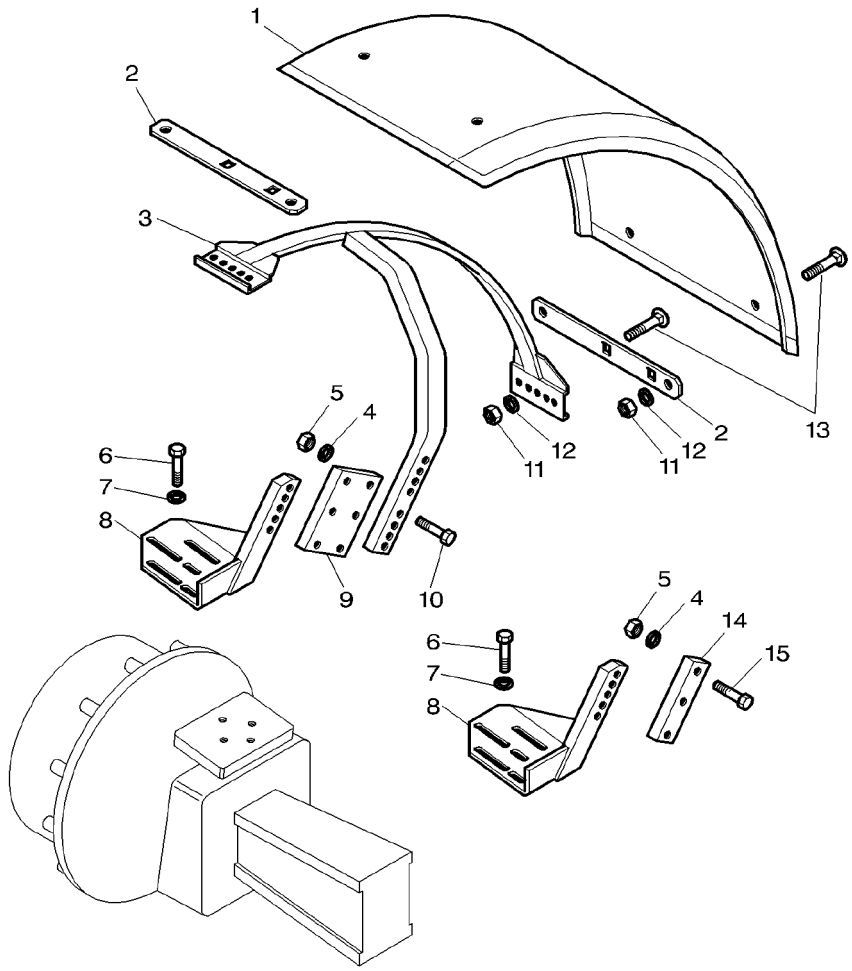

1	3619229M2	▶◀ 470MM	**2**	FENDER	AILE PARAFANGO	KOTFLUEGEL GUARDABARRO
1	3779567M1	▶◀ 520MM	**2**	FENDER	AILE PARAFANGO	KOTFLUEGEL GUARDABARRO
2	3777586M2	◀▶ 340MM	**4**	PLATE	PLAQUE PIASTRA	PLATTE PLATO
2	3777587M2	◀▶ 400MM	**4**	PLATE	PLAQUE PIASTRA	PLATTE PLATO
3	3777588M1	◀	**1**	SUPPORT	SUPPORT SUPPORTO	LAGERUNG DISPOS.DE SOSTEN
3	3777590M1	▶	**1**	SUPPORT	SUPPORT SUPPORTO	LAGERUNG DISPOS.DE SOSTEN
4	390735X1	▶| J012003	**8**	WASHER	RONDELLE RONDELLA	UNTERLEGSCHEIBE ARANDELA
4	390735X1	|▶ J012004	**6**	WASHER	RONDELLE RONDELLA	UNTERLEGSCHEIBE ARANDELA
5	3009695X1	▶| J012003	**8**	NUT METRIC	ECROU METRIQUE DADO METRICO	MUTTER METRISCH TUERCA METRICO
5	3009695X1	|▶ J012004	**6**	NUT METRIC	ECROU METRIQUE DADO METRICO	MUTTER METRISCH TUERCA METRICO
6	3009493X1	M10X30	**6**	SCREW METRIC	VIS METRIQUE VITE METRICA	SCHRAUBE METR TORNILLO METRICO
7	**3619096M1**	∅ 10,5X32X5	**6**	WASHER	RONDELLE RONDELLA	UNTERLEGSCHEIBE ARANDELA
8	3777589M1	◀	**1**	SUPPORT	SUPPORT SUPPORTO	LAGERUNG DISPOS.DE SOSTEN
8	3777591M1	▶	**1**	SUPPORT	SUPPORT SUPPORTO	LAGERUNG DISPOS.DE SOSTEN
9	3779565M2	▶| J012003	**2**	SPACER	ENTRETOISE DISTANZIALE	ABSTANDSTUECK PIEZA DISTANCIA
10	3009513X1	▶| J012003 M12X65	**8**	BOLT METRIC	BOULON METRIQUE BULLONE METRICO	MASCH.SCHRB MET PERNO METRICO
10	3009513X1	|▶ J012004 M12X65	**2**	BOLT METRIC	BOULON METRIQUE BULLONE METRICO	MASCH.SCHRB MET PERNO METRICO
11	392310X1		**12**	NUT METRIC	ECROU METRIQUE DADO METRICO	MUTTER METRISCH TUERCA METRICO
12	390734X1		**12**	WASHER METRIC	RONDELLE METR. RONDELLA METRICO	SCHEIBE METRISCH ARANDELA METRICO
13	385373X1	M10X25	**12**	BOLT METRIC	BOULON METRIQUE BULLONE METRICO	MASCH.SCHRB MET PERNO METRICO
14	3777716M1	|▶ J012004	**2**	SPACER	ENTRETOISE DISTANZIALE	ABSTANDSTUECK PIEZA DISTANCIA
15	3009516X1	|▶ J012004 M12X90	**2**	SCREW METRIC	VIS METRIQUE VITE METRICA	SCHRAUBE METR TORNILLO METRICO

Front Axle 4 Wheel Drive **Essieu Avant 4 Roues Motrices** **Vorderachse−4wd** **Assale Anteriore 4 Ruote Motrici** **Doble Traccion De Eje Frontal**	**Mudguards And Supports** **Garde Boue Et Supports** **Radabdeckung Mit Stutze** **Parafanghi E Supporto** **Guardabarros Y Soporte**	**130-35**	**Pivoting** **Pivotant** **Luftpolsterungsitz** **Girando** **Redondo**

1-ZK14-010-A

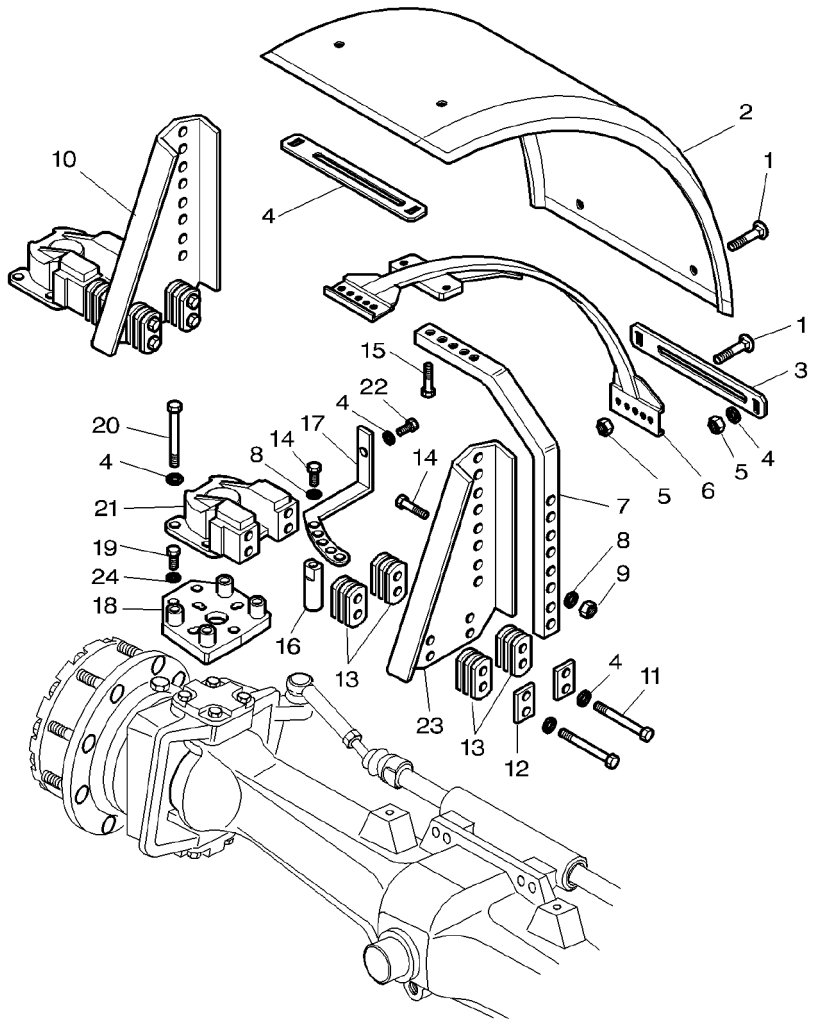

1	**390809X1**	M10x20	
2	3780467M1	▶◀	620MM
2	3619229M2	▶◀	470MM
2	3779567M1	▶◀	520MM
3	3777586M2	◀▶	340MM
3	3777587M2	◀▶	400MM
3	3780468M2	◀▶	448MM
4	390734X1		
5	3009693X1	M10	
6	3784948M1		
7	3784947M1		
8	390735X1		
9	1442190X1	M12	
10	3784943M91	▶	
10	3784944M91	◀	
11	1442602X1	10	M10X100
12	3785052M1	10	
13	3785051M1	10	
14	3009509X1	M12X45	
15	1441226X1	M12X40	
16	3784976M2		
17	3785266M1	◀	
17	3785267M1	▶	
18	3785027M1		
19	3009493X1	M10X30	
20	3009496X1	M10X45	

12	BOLT METRIC	BOULON METRIQUE BULLONE METRICO	MASCH.SCHRB MET PERNO METRICO
2	FENDER	AILE PARAFANGO	KOTFLUEGEL GUARDABARRO
2	FENDER	AILE PARAFANGO	KOTFLUEGEL GUARDABARRO
2	FENDER	AILE PARAFANGO	KOTFLUEGEL GUARDABARRO
4	PLATE	PLAQUE PIASTRA	PLATTE PLATO
4	PLATE	PLAQUE PIASTRA	PLATTE PLATO
4	PLATE	PLAQUE PIASTRA	PLATTE PLATO
18	WASHER METRIC	RONDELLE METR. RONDELLA METRICO	SCHEIBE METRISCH ARANDELA METRICO
8	NUT METRIC	ECROU METRIQUE DADO METRICO	MUTTER METRISCH TUERCA METRICO
2	SAFETY FRAME	ARCEAU TELAIO SICUREZZA	SICHERH.RAHMEN BAST.SEGURIDAD
2	ARM	BRAS BRACCIO	ARM BRAZO
6	WASHER	RONDELLE RONDELLA	UNTERLEGSCHEIBE ARANDELA
4	NUT METRIC	ECROU METRIQUE DADO METRICO	MUTTER METRISCH TUERCA METRICO
1	PIVOT	PIVOT CARDINE	DREHZAPFEN PIVOTE
1	PIVOT	PIVOT CARDINE	DREHZAPFEN PIVOTE
4	SCREW METRIC	VIS METRIQUE VITE METRICA	SCHRAUBE METR TORNILLO METRICO
2	BRIDLE	BRIDE BRIGLIA	SPANNBAND BRIDA
26	SPACER	ENTRETOISE DISTANZIALE	ABSTANDSTUECK PIEZA DISTANCIA
6	BOLT METRIC	BOULON METRIQUE BULLONE METRICO	MASCH.SCHRB MET PERNO METRICO
4	SCREW	VIS VITE	SCHRAUBE TORNILLO
2	CLEVIS PIN	AXE PERNO D'ATTACCO	SPLINTBOLZEN BULON CILINDRICO
1	STRAP	PATTE CORREGGIA	LASCHE FAJA
1	STRAP	PATTE CORREGGIA	LASCHE FAJA
2	PLATE	PLAQUE PIASTRA	PLATTE PLATO
6	SCREW METRIC	VIS METRIQUE VITE METRICA	SCHRAUBE METR TORNILLO METRICO
8	BOLT METRIC	BOULON METRIQUE BULLONE METRICO	MASCH.SCHRB MET PERNO METRICO

1-ZK14-010-A

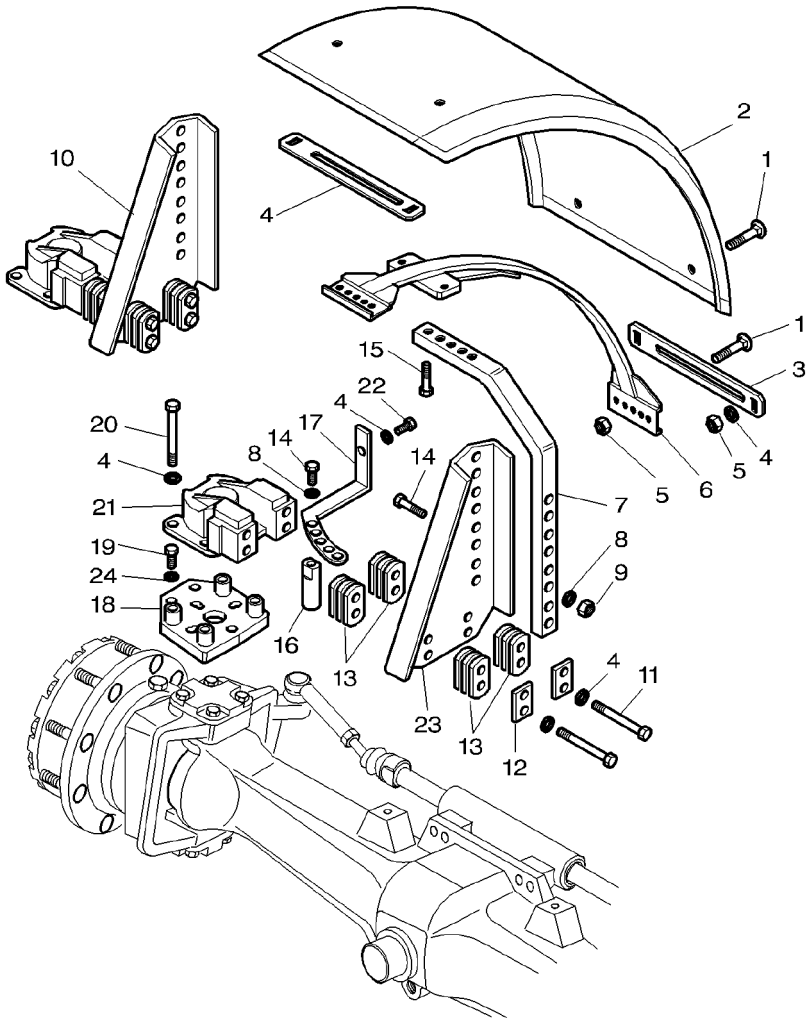

21	3785053M1	10 ▶	**1**	PIVOT	PIVOT CARDINE	DREHZAPFEN PIVOTE
21	3785271M1	10 ◀	**1**	PIVOT	PIVOT CARDINE	DREHZAPFEN PIVOTE
22	3011002X1	M10x35-1,25	**2**	SCREW	VIS VITE	SCHRAUBE TORNILLO
23	3785050M1	10 ◀	**1**	PLATE	PLAQUE PIASTRA	PLATTE PLATO
23	3785049M1	10 ▶	**1**	PLATE	PLAQUE PIASTRA	PLATTE PLATO
24	390734X1	M10	**6**	WASHER METRIC	RONDELLE METR. RONDELLA METRICO	SCHEIBE METRISCH ARANDELA METRICO

1-ZM01-001-A

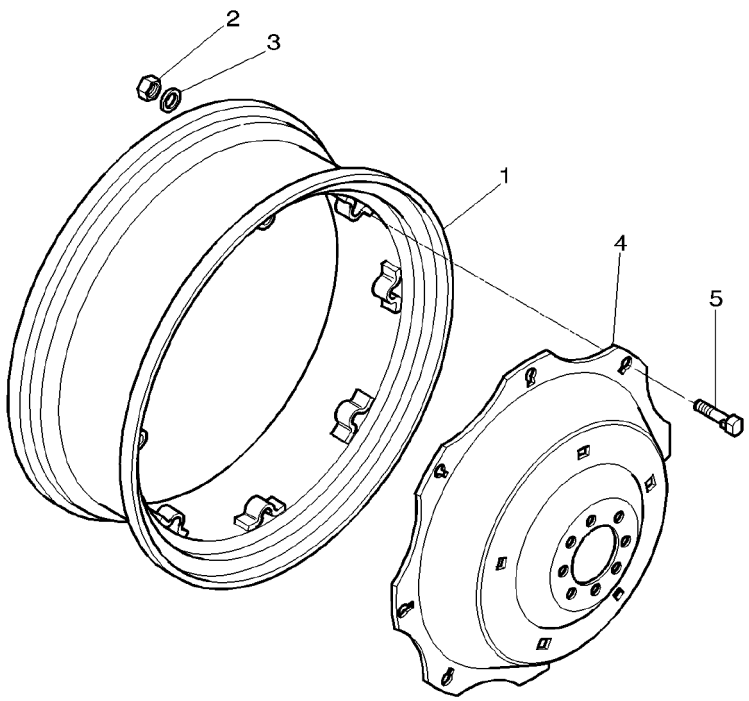

1	3581789M3	[AD] DWW 15 X 38"	**2**	RIM	JANTE CERCHIONE	FELGE LLANTA
1	3618937M3	[AF] DWL18 X 38"	**2**	RIM	JANTE CERCHIONE	FELGE LLANTA
2	1440231X1		**8**	NUT METRIC	ECROU METRIQUE DADO METRICO	MUTTER METRISCH TUERCA METRICO
3	338577X1		**8**	WASHER	RONDELLE RONDELLA	UNTERLEGSCHEIBE ARANDELA
4	**3581788M1**	38"	**2**	DISC	DISQUE DISCO	SCHEIBE DISCO
5	3384624M1	M16X125	**8**	SCREW SPECIAL	VIS SPECIALE VITE SPECIALE	SPEZIALSCHRAUBE TORNILLO ESPEC.

[A] 8 BRIDGE PIECES
8 PONTETS
8 TRAVERSE
8 TRAVERSA PONTI
8 CODO DE CRUSES

[D] USED WITH 16.9−18.4−420/85−460/85−480/70−520/70−54 0/65−600/65 X 38" TYRES
UTILISE AVEC PNEUS 16.9−18.4−420/85−460/85−480/70− 520/70−540/65−600/65 X 34"
NUR FUER REIFEN 16.9−18.4−420/85−460/85−480/70−520 /70−540/65−600/65 X 34"
USARE CON PNEUMATICO 16.9−18.4−420/85−460/85−480/7 0−520/70−540/65−600/65 X 34"
USAR CON NEUMATICOS 16.9−18.4−420/85−460/85−480/70 520/70−540/65−600/65 X 34"

[F] USED WITH 20.8−520/70−580/70−600/65−650/65 X 38"TY RES
UTILISE AVEC PNEUS 20.8−520/70−580/70−600/55−650/6 5 X 38"
NUR FUER REIFEN 20.8−520/70−580/70−600/65−650/65 X 38"
USARE CON PNEUMATICO 20.8−520/70−580/70−600/65−650 /65 X 38"
USAR CON NEUMATICOS 20.8−520/70−580/70−600/65−650/ 65 X 38"

1-ZM01-014-A

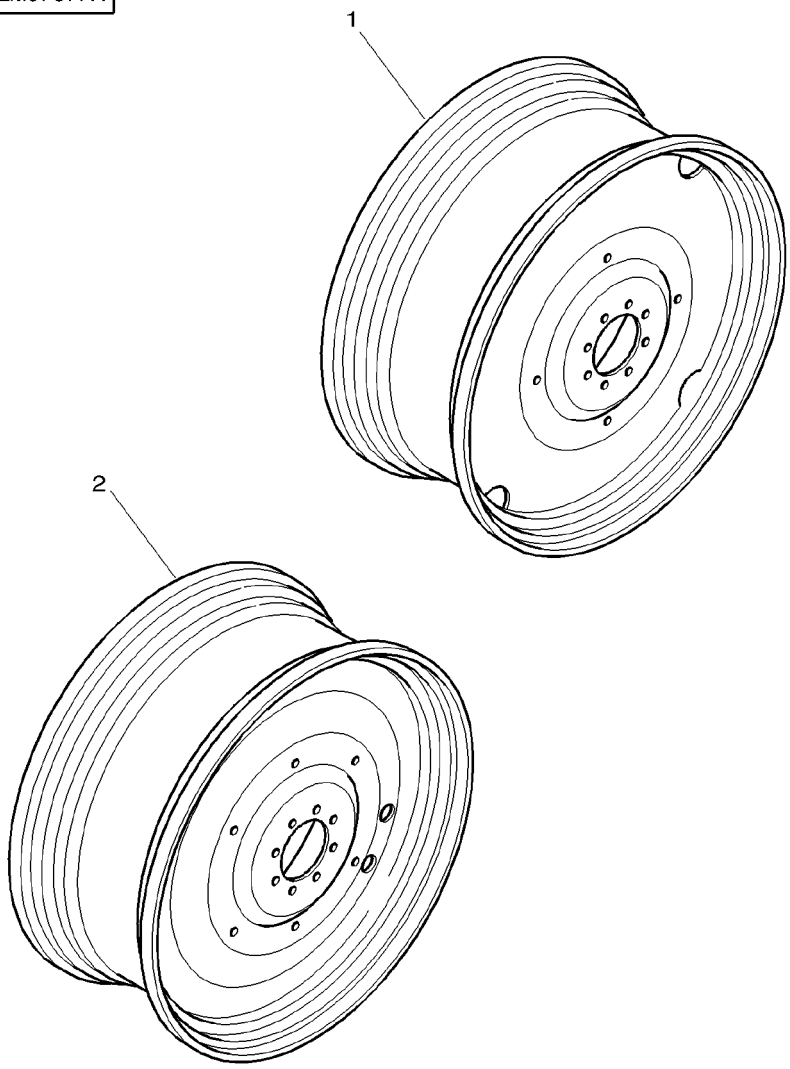

1	3782641M1	➡| 10-OCT-2000 WL15X38	**2**	RIM	JANTE CERCHIONE	FELGE LLANTA
1	3782868M1	➡| 10-OCT-2000 WL18X38	**2**	RIM	JANTE CERCHIONE	FELGE LLANTA
2	3784175M1	➡ 11-OCT-2000 WL15X38		**2**	RIM	JANTE CERCHIONE	FELGE LLANTA
2	3784174M1	➡ 11-OCT-2000 WL18X38		**2**	RIM	JANTE CERCHIONE	FELGE LLANTA

1-ZM01-004-A

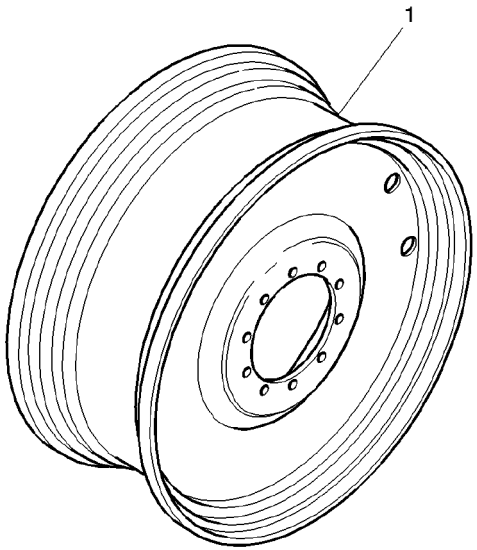

1	3781970M1	[A] DWW 16 X 38"	**2**	RIM	JANTE CERCHIONE	FELGE LLANTA
1	3781971M1	[B] DWW 18 X 38"	**2**	RIM	JANTE CERCHIONE	FELGE LLANTA
1	3781972M1	[C] DWW 23 X 38"	**2**	RIM	JANTE CERCHIONE	FELGE LLANTA
1	3781968M1	[D] DWW 16 X 42"	**2**	RIM	JANTE CERCHIONE	FELGE LLANTA
1	3781969M2	[E] DWW 18 X 42"	**2**	RIM	JANTE CERCHIONE	FELGE LLANTA
1	3781981M1	[G] W 12 X 46"	**2**	RIM	JANTE CERCHIONE	FELGE LLANTA
1	3781982M1	[FG] W 16 X 46"	**2**	RIM	JANTE CERCHIONE	FELGE LLANTA

[A] USED WITH 16.9−18.4−20.8−420/85−460/85−480/70 −520/70−540/65X38 TYRES
UTILISE AVEC PNEUS 16.9−18.4−20.8−420/85−460/85 −480/70−520/70−540/65X38
VERWENDEN MIT REIFEN 16.9−18.4−20.8−420/85−460/85 −480/70−520/70−540/65X38
USATO CON PNEUMATICI 16.9−18.4−20.8−420/85−460/85 −480/70−520/70−540/65X38
EMPLEAR CON NEUMATICOS 6.9−18.4−20.8−420/85 −460/85−480/70−520/70−540/65X38

[B] USED WITH 20.8−520/70−520/85−580/70−600/65 −650/65X38 TYRES
UTILISE AVEC PNEUS 20.8−520/70−520/85−580/70 −600/65−650/65X38
VERWENDEN MIT REIFEN 20.8−520/70−520/85−580/70 −600/65−650/65X38
USATO CON PNEUMATICI 20.8−520/70−520/85−580/70 −600/65−650/65X38
EMPLEAR CON NEUMATICOS 20.8−520/70−520/85−580/70 −600/65−650/65X38

[C] USED WITH 650/85−710/70X38 TYRES
UTILISE AVEC PNEUS 650/85−710/70X38
VERWENDEN MIT REIFEN 650/85−710/70X38
USATO CON PNEUMATICI 650/85−710/70X38
EMPLEAR CON NEUMATICOS 650/85−710/70X38

[D] USED WITH 18.4X42 TYRES
UTILISE AVEC PNEUS 18.4X42
VERWENDEN MIT REIFEN 18.4X42
USATO CON PNEUMATICI 18.4X42
EMPLEAR CON NEUMATICOS 18.4X42

[E] USED WITH 20.8−620/70−350/65X42 TYRES
UTILISE AVEC PNEUS 20.8−620/70−350/65X42
VERWENDEN MIT REIFEN 20.8−620/70−350/65X42
USATO CON PNEUMATICI 20.8−620/70−350/65X42
EMPLEAR CON NEUMATICOS 20.8−620/70−350/65X42

[F] USED WITH 18.4X46 TYRES
UTILISE AVEC PNEUS 18.4X46
VERWENDEN MIT REIFEN 18.4X46
USATO CON PNEUMATICI 18.4X46
EMPLEAR CON NEUMATICOS 18.4X46

1-ZM01-004-A

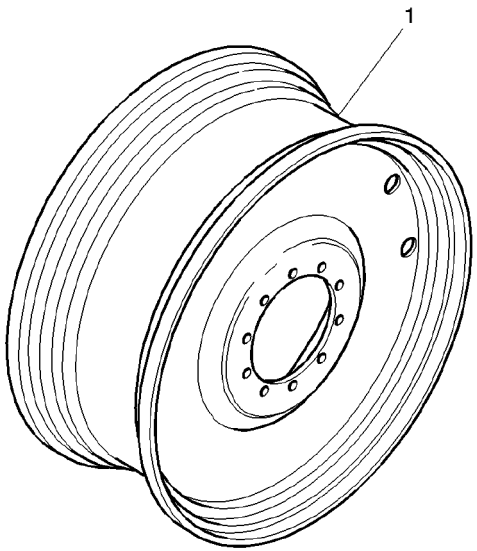

[G] CAN BE TWINED FITTED
PEUT ETRE MONTEE JUMELEE
KANN DOPPLEMONTIERT SEIN
PUO ESSARE ACCOPIARE
SE PUEDE EMPAREJA

Rear Wheels
Roues Arriere
Hinterraeder
Ruote Posteriori
Ruedas Traseras

130-55

1-ZM01-006-A

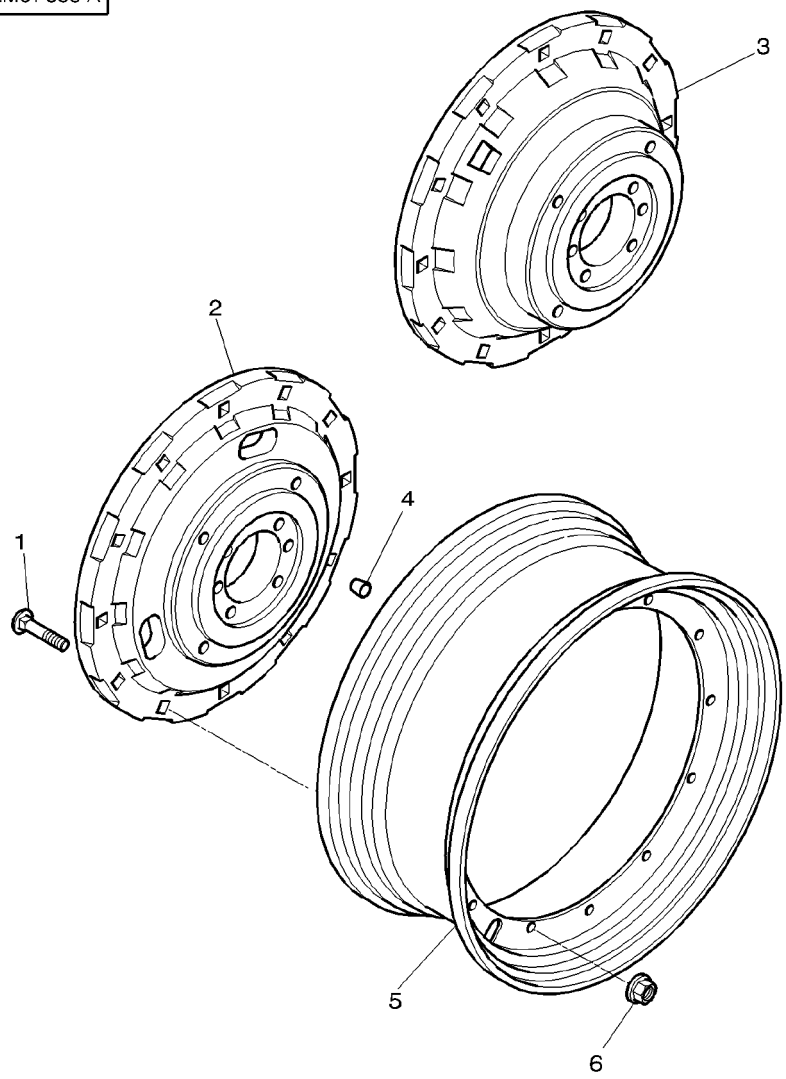

1	3384603M1	M18X95	**24**	SCREW	VIS VITE	SCHRAUBE TORNILLO
2	3582139M4	38"	**2**	FLANGE	FLASQUE FLANGIA	FLANSCH PLETINA
3	3615370M3	38"	**2**	FLANGE	FLASQUE FLANGIA	FLANSCH PLETINA
4	3780302M1		**8**	DOWEL	PLOT SPINA	ZYLINDERSTIFT CENTRAJE
5	3781929M1	[AD] DWW 16 X 38"	**2**	RIM	JANTE CERCHIONE	FELGE LLANTA
5	3781930M1	[BE] DWW 18 X 38"	**2**	RIM	JANTE CERCHIONE	FELGE LLANTA
5	3782154M1	[C] DWW 23 X 38"	**2**	RIM	JANTE CERCHIONE	FELGE LLANTA
6	***3384600M2***	M18	**24**	NUT SPECIAL	ECROU SPECIAL DADO SPECIALE	SPEZIALMUTTER TUERCA ESPECIAL

[A] USED WITH 16.9−18.4−20.8−420/85−460/85−480/70 −520/70−540/65X38 TYRES
UTILISE AVEC PNEUS 16.9−18.4−20.8−420/85−460/85 −480/70−520/70−540/65X38
VERWENDEN MIT REIFEN 16.9−18.4−20.8−420/85−460/85 −480/70−520/70−540/65X38
USATO CON PNEUMATICI 16.9−18.4−20.8−420/85−460/85 −480/70−520/70−540/65X38
EMPLEAR CON NEUMATICOS 6.9−18.4−20.8−420/85 −460/85−480/70−520/70−540/65X38

[B] USED WITH 20.8−520/70−520/85−580/70−600/65 −650/65X38 TYRES
UTILISE AVEC PNEUS 20.8−520/70−520/85−580/70 −600/65−650/65X38
VERWENDEN MIT REIFEN 20.8−520/70−520/85−580/70 −600/65−650/65X38
USATO CON PNEUMATICI 20.8−520/70−520/85−580/70 −600/65−650/65X38
EMPLEAR CON NEUMATICOS 20.8−520/70−520/85−580/70 −600/65−650/65X38

[C] USED WITH 650/85−710/70X38 TYRES
UTILISE AVEC PNEUS 650/85−710/70X38
VERWENDEN MIT REIFEN 650/85−710/70X38
USATO CON PNEUMATICI 650/85−710/70X38
EMPLEAR CON NEUMATICOS 650/85−710/70X38

[D] WITH RIM 3615370M3 CAN BE TWINED FITTED WITH WHEEL 3781970M1
AVEC VOILE 3615370M3 PEUT ETRE JUMELEE AVEC JANTE 3781970M1
MIT RADSCHUESSEL 3615370M3 KANN MIT FELGE 3781970M1 DOPPLEMONTIERT SEIN
CON CERCHIONE 3615370M3 PUO ESSARE ACCOPIARE CON RUOTA 3781970M1
CON LLANTA 3615370M3 SE PUEDE EMPAREJA CON RUEDA 3781970M1

[E] WITH RIM 3615370M3 CAN BE TWINED FITTED WITH WHEEL 3781971M1
AVEC VOILE 3615370M3 PEUT ETRE JUMELEE AVEC JANTE 3781971M1
MIT RADSCHUESSEL 3615370M3 KANN MIT FELGE 3781971M1 DOPPLEMONTIERT SEIN
CON CERCHIONE 3615370M3 PUO ESSARE ACCOPIARE CON RUOTA 3781971M1
CON LLANTA 3615370M3 SE PUEDE EMPAREJA CON RUEDA 3781971M1

Rear Wheels
Roues Arriere
Hinterraeder
Ruote Posteriori
Ruedas Traseras

130-60

1-ZM01-008-A

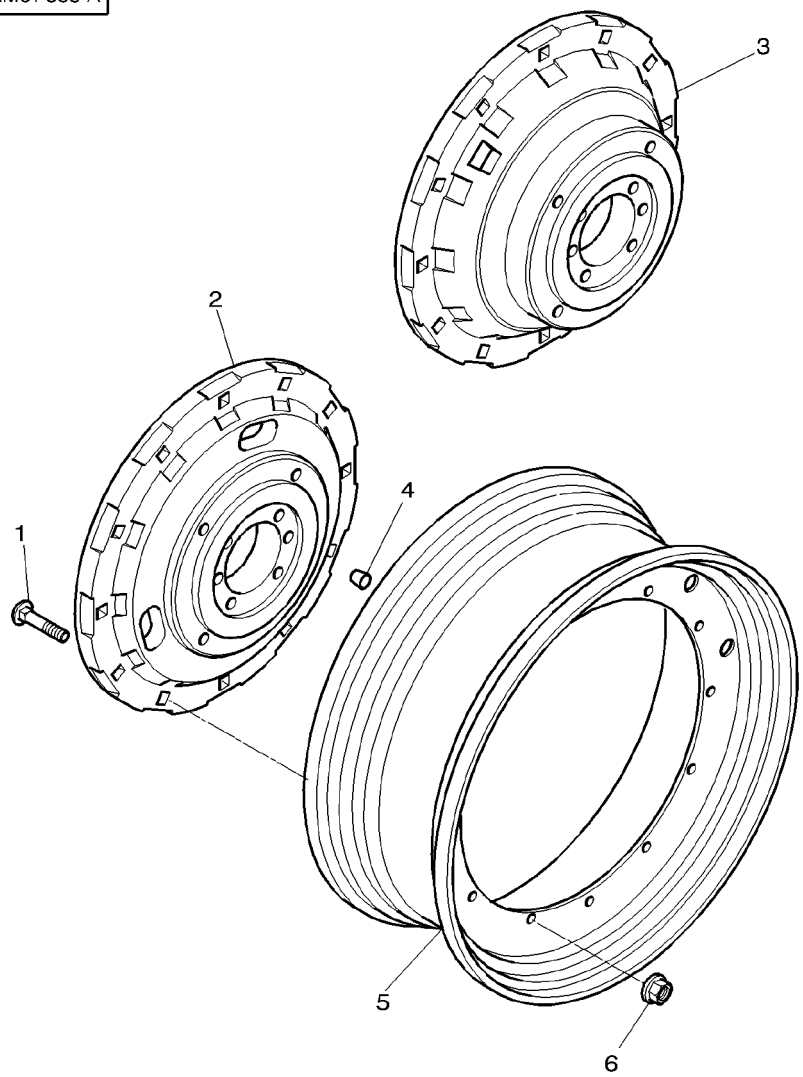

1	3384603M1	M18X95	**24**	SCREW	VIS VITE	SCHRAUBE TORNILLO
2	3582139M4	38"	**2**	FLANGE	FLASQUE FLANGIA	FLANSCH PLETINA
3	3615370M3	38"	**2**	FLANGE	FLASQUE FLANGIA	FLANSCH PLETINA
4	3780302M1		**8**	DOWEL	PLOT SPINA	ZYLINDERSTIFT CENTRAJE
5	3782156M1	W 12 X 46"	**2**	RIM	JANTE CERCHIONE	FELGE LLANTA
5	3782157M1	[A] W 16 X 46"	**2**	RIM	JANTE CERCHIONE	FELGE LLANTA
6	***3384600M2***	M18	**24**	NUT SPECIAL	ECROU SPECIAL DADO SPECIALE	SPEZIALMUTTER TUERCA ESPECIAL

[A] USED WITH 18.4X46 TYRES
UTILISE AVEC PNEUS 18.4X46
VERWENDEN MIT REIFEN 18.4X46
USATO CON PNEUMATICI 18.4X46
EMPLEAR CON NEUMATICOS 18.4X46

Rear Wheels
Roues Arriere
Hinterraeder
Ruote Posteriori
Ruedas Traseras

130-65

1-ZM01-010-A

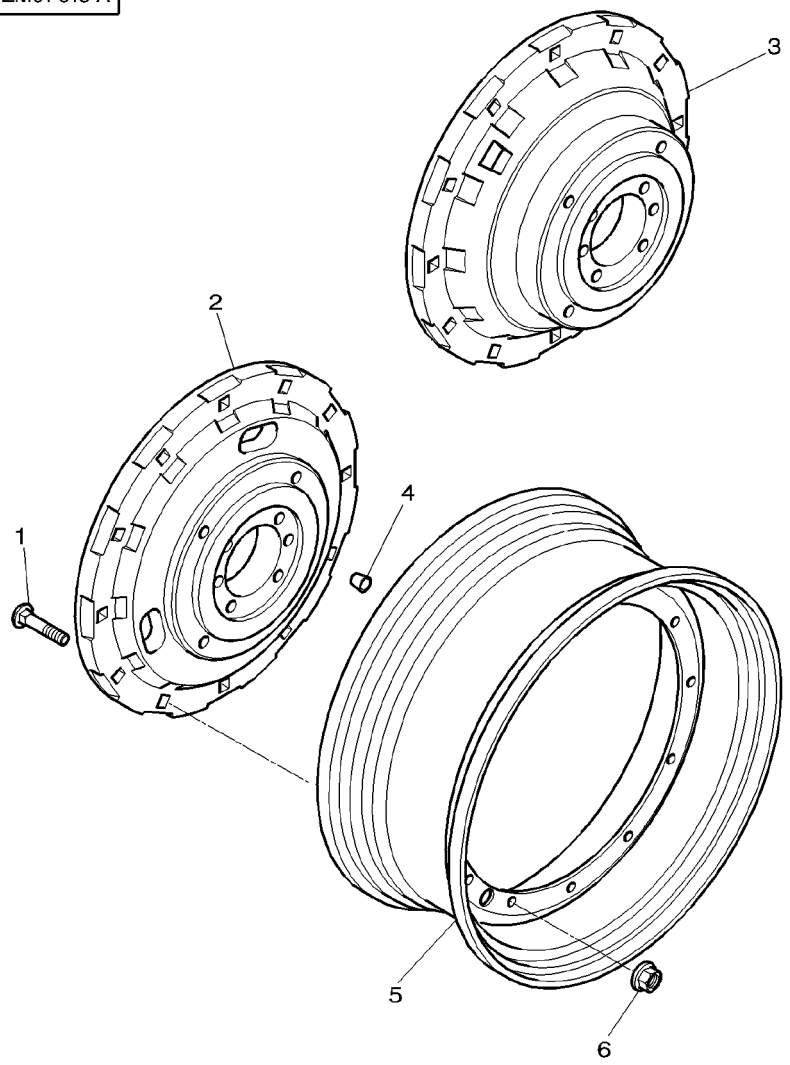

1	3384603M1	M18X95	**24**	SCREW	VIS VITE	SCHRAUBE TORNILLO
2	3582139M4	38"	**2**	FLANGE	FLASQUE FLANGIA	FLANSCH PLETINA
3	3615370M3	38"	**2**	FLANGE	FLASQUE FLANGIA	FLANSCH PLETINA
4	3780302M1		**8**	DOWEL	PLOT SPINA	ZYLINDERSTIFT CENTRAJE
5	3781926M1	[AC] DWW 16 X 42"	**2**	RIM	JANTE CERCHIONE	FELGE LLANTA
5	3782155M1	[BD] DWW 18 X 42"	**2**	RIM	JANTE CERCHIONE	FELGE LLANTA
6	***3384600M2***	M18	**24**	NUT SPECIAL	ECROU SPECIAL DADO SPECIALE	SPEZIALMUTTER TUERCA ESPECIAL

[A] USED WITH 18.4X42 TYRES
UTILISE AVEC PNEUS 18.4X42
VERWENDEN MIT REIFEN 18.4X42
USATO CON PNEUMATICI 18.4X42
EMPLEAR CON NEUMATICOS 18.4X42

[B] USED WITH 20.8−620/70−350/65X42 TYRES
UTILISE AVEC PNEUS 20.8−620/70−350/65X42
VERWENDEN MIT REIFEN 20.8−620/70−350/65X42
USATO CON PNEUMATICI 20.8−620/70−350/65X42
EMPLEAR CON NEUMATICOS 20.8−620/70−350/65X42

[C] WITH RIM 3615370M3 CAN BE TWINED FITTED WITH WHEEL 3781968M1
AVEC VOILE 3615370M3 PEUT ETRE JUMELEE AVEC JANTE 3781968M1
MIT RADSCHUESSEL 3615370M3 KANN MIT FELGE 3781968M1 DOPPLEMONTIERT SEIN
CON CERCHIONE 3615370M3 PUO ESSARE ACCOPIARE CON RUOTA 3781968M1
CON LLANTA 3615370M3 SE PUEDE EMPAREJA CON RUEDA 3781968M1

[D] WITH RIM 3615370M3 CAN BE TWINED FITTED WITH WHEEL 3781969M1
AVEC VOILE 3615370M3 PEUT ETRE JUMELEE AVEC JANTE 3781969M1
MIT RADSCHUESSEL 3615370M3 KANN MIT FELGE 3781969M1 DOPPLEMONTIERT SEIN
CON CERCHIONE 3615370M3 PUO ESSARE ACCOPIARE CON RUOTA 3781969M1
CON LLANTA 3615370M3 SE PUEDE EMPAREJA CON RUEDA 3781969M1

Rear Wheels **Roues Arriere** **Hinterraeder** **Ruote Posteriori** **Ruedas Traseras**	**Fixing By Cone** **Fixation Par Cone** **Anbau Der Konus** **Montaggio Con Cono** **Fijacion Con Cono**	**130-70**	**Shaft Diameter 95mm** **Arbre Diametre 95mm** **Durchmesserwelle 95mm** **Albero Diametro 95mm** **Palier Diametro 95mm**

1-ZM05-002-B

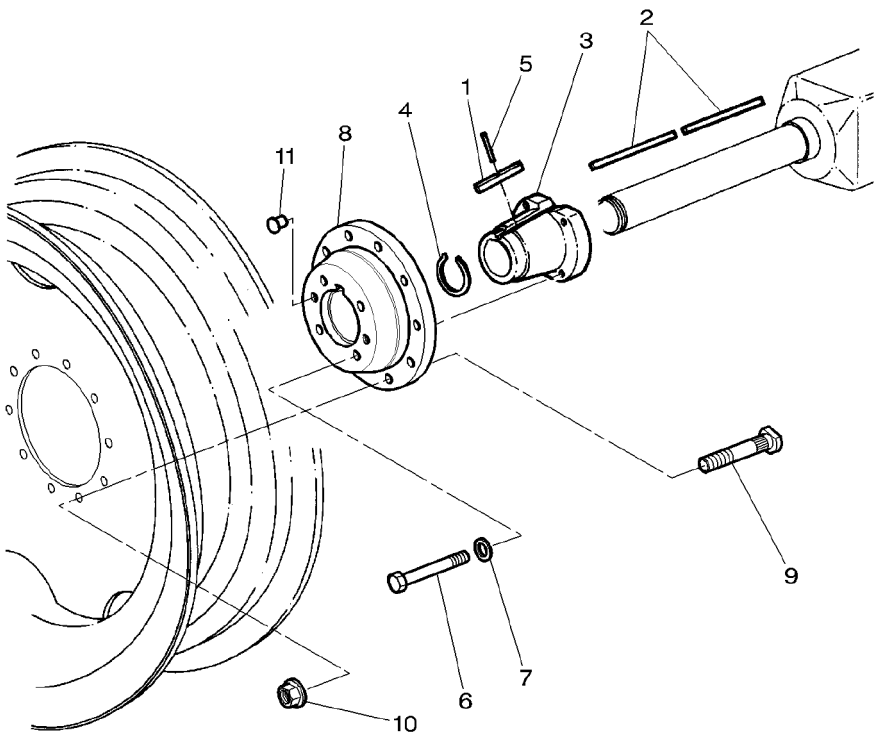

				●		SINGLE WHEELS	ROUES SIMPLES RUOTE SINGOLE	EINFACHRAEDER RUEDAS SENCILLAS
				●		DUAL WHEELS	ROUES JUMELEES RUOTE ACCOPIATE	ZWILLINGSRAEDER RUEDAS DOBLES
1	509816M2			**4**	**2**	KEY	CLAVETTE CHIAVETTA	PASSKEIL CLAVE
2	1612098M2	[B] →| 09-OCT-2000 ∅ 95MM		**4**	**2**	KEY	CLAVETTE CHIAVETTA	PASSKEIL CLAVE
2	3716106M3	[C] → 10-OCT-2000 ∅ 95MM		**4**	**2**	KEY	CLAVETTE CHIAVETTA	PASSKEIL CLAVE
3	1612096M1	[B] →| 09-OCT-2000 ◀ ∅ 95MM		**2**	**1**	HUB	MOYEU MOZZO	NABE CUBO
3	3793048M1	[C] → 10-OCT-2000 ◀ ∅ 95MM		**2**	**1**	CONE	CONE CONO	KONUS CONO
3	1612097M1	[B] →| 09-OCT-2000 ▶ ∅ 95MM		**2**	**1**	HUB	MOYEU MOZZO	NABE CUBO
3	3793049M1	[C] → 10-OCT-2000 ▶ ∅ 95MM		**2**	**1**	CONE	CONE CONO	KONUS CONO
4	358882X1	∅ 95MM		**2**	**2**	RING	ANNEAU ANELLO	RING ARO
5	763786M1	∅ 95MM		**4**	**2**	PIN	GOUPILLE PERNO	BOLZEN PASADOR
6	511411M3	3/4-10 X 165		**16**	**8**	SCREW	VIS VITE	SCHRAUBE TORNILLO
7	353775X1			**16**	**8**	WASHER	RONDELLE RONDELLA	UNTERLEGSCHEIBE ARANDELA
8	3792619M2	[A]		**4**	**2**	IMPELLER HUB	MOYEU ROUE MOZZO GIRANTE	FLUEGELRADNABE CUBO DE IMPULSOR
9	3792488M2	M22X85MM		**40**	**20**	STUD	GOUJON PRIGIONIERO	STEHBOLZEN ESPARRAGO
10	***3712611M2***			**40**	**20**	NUT SPECIAL	ECROU SPECIAL DADO SPECIALE	SPEZIALMUTTER TUERCA ESPECIAL
11	831564M1			**8**	**4**	PLUG	BOUCHON TAPPO	VERSCHL.STOPFEN TAPON

[A] WITH RIM STEEL
AVEC JANTE ACIER
MIT FELGE STAHL
CON CERCHIONE ACCIAID
CON LLANTA ACERO

Rear Wheels **Roues Arriere** **Hinterraeder** **Ruote Posteriori** **Ruedas Traseras**	**Fixing By Cone** **Fixation Par Cone** **Anbau Der Konus** **Montaggio Con Cono** **Fijacion Con Cono**	**130-70**	**Shaft Diameter 95mm** **Arbre Diametre 95mm** **Durchmesserwelle 95mm** **Albero Diametro 95mm** **Palier Diametro 95mm**

1-ZM05-002-B

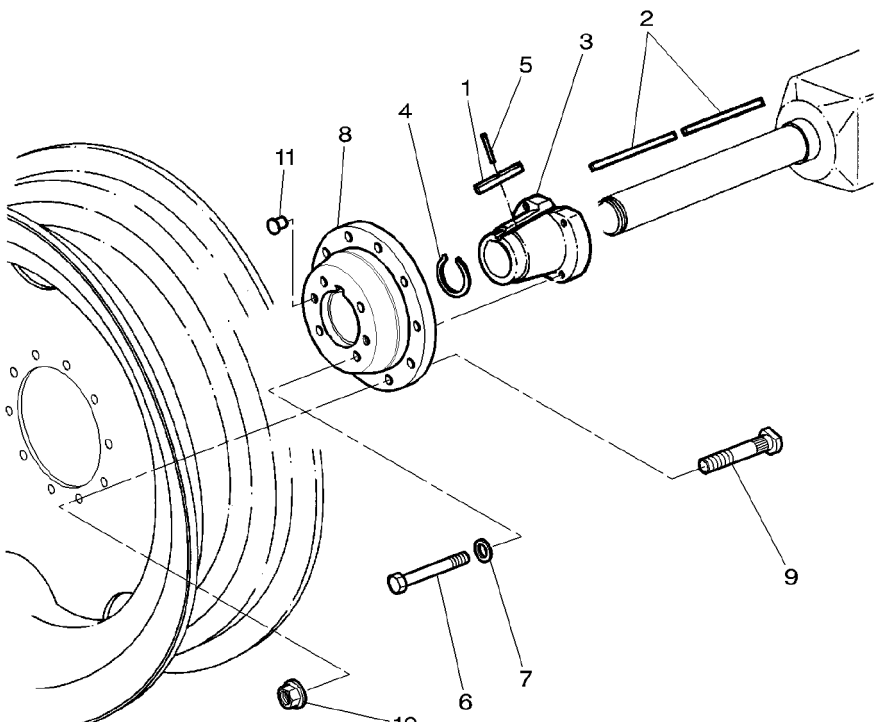

- ● SINGLE WHEELS — ROUES SIMPLES / RUOTE SINGOLE — EINFACHRAEDER / RUEDAS SENCILLAS
- ● DUAL WHEELS — ROUES JUMELEES / RUOTE ACCOPIATE — ZWILLINGSRAEDER / RUEDAS DOBLES

[B] RECTANGULAR KEY
CLAVETTE RECTANGULAIRE
PASSKEIL RECHTECKIG
CHIAVETTA RETTANGOLARE
CLAVE RECTANGULAR

[C] HEXAGONAL KEY
CLAVETTE HEXAGONALE
PASSKEIL SECHSECKIG
CHIAVETTA ESAGONALE
CLAVE HEXAGONAL

Rear Wheels
Roues Arriere
Hinterraeder
Ruote Posteriori
Ruedas Traseras

130-75

Distance Spacer For Wide Tread
Entretoise Pour Voie Large
Ausgleichscheibe Fur Breitspur
Distanziale Per Carreggiata Larga
Distanciadora Para Via Ancha

1-ZM01-013-A

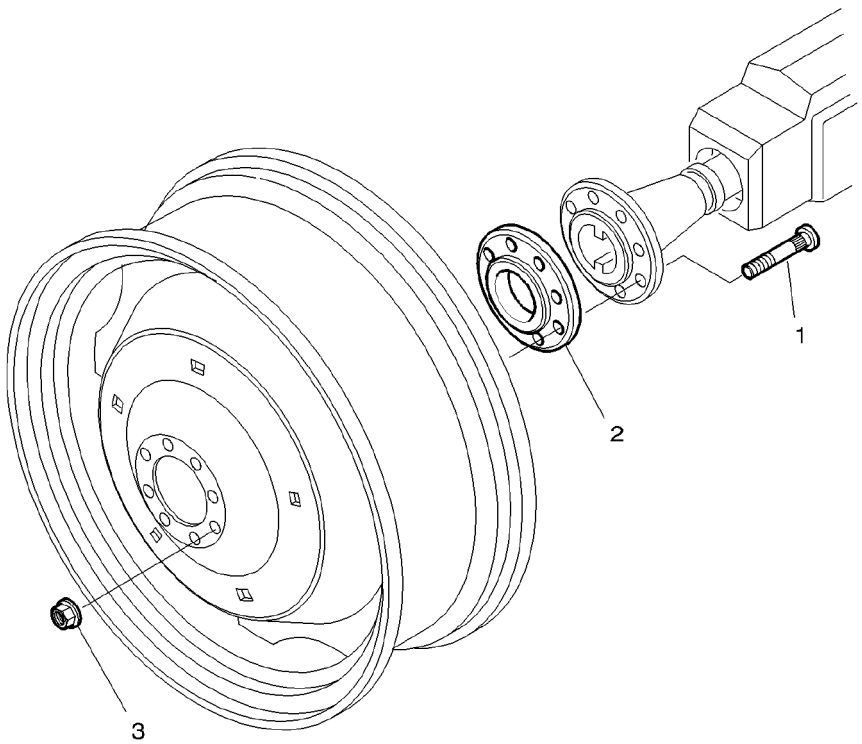

1	3794694M1	M18X1,5X113	**16**	STUD	GOUJON PRIGIONIERO	STEHBOLZEN ESPARRAGO
2	3784133M1		**2**	SPACER	ENTRETOISE DISTANZIALE	ABSTANDSTUECK PIEZA DISTANCIA
3	***3384600M2***	M18	**16**	NUT SPECIAL	ECROU SPECIAL DADO SPECIALE	SPEZIALMUTTER TUERCA ESPECIAL

Wheel Weights
Masses De Roue
Radgewichte
Contrappesi Per Ruote
Pesos De Rueda

130-80

1-ZX17-001-B

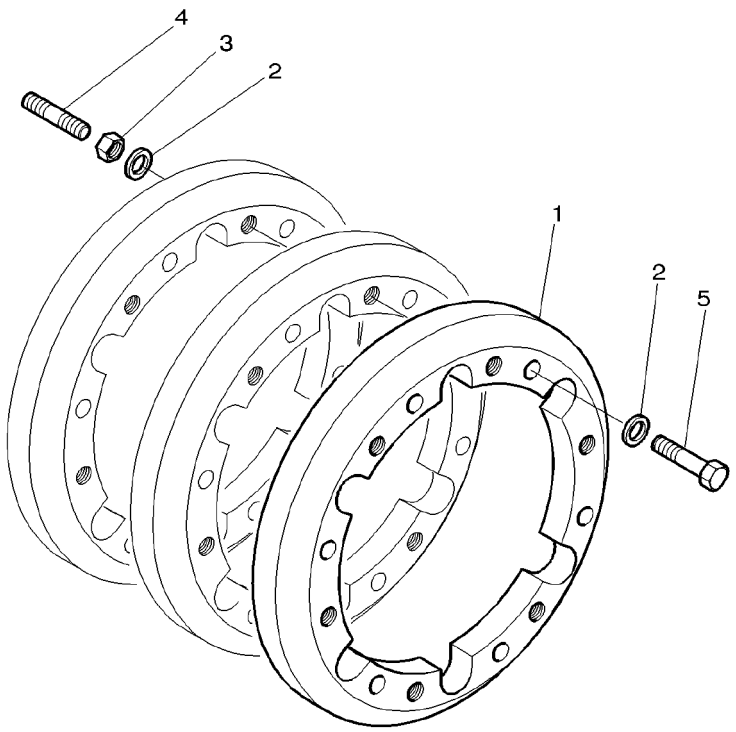

1	3712626M1	53KG	X	WEIGHT	MASSE PESO	GEWICHT PESA
2	3019575X1		X	WASHER METRIC	RONDELLE METR. RONDELLA METRICO	SCHEIBE METRISCH ARANDELA METRICO
3	339034X1	M16	12	NUT METRIC	ECROU METRIQUE DADO METRICO	MUTTER METRISCH TUERCA METRICO
4	3386466M1	M16X65	12	STUD	GOUJON PRIGIONIERO	STEHBOLZEN ESPARRAGO
5	339805X1	M16X100	X	BOLT METRIC	BOULON METRIQUE BULLONE METRICO	MASCH.SCHRB MET PERNO METRICO

Wheel Wedges
Cales De Roues
Unterlegkeile
Zeppe Per Ruote
Cunas De Rueda

130-85

1-ZX37-001-A

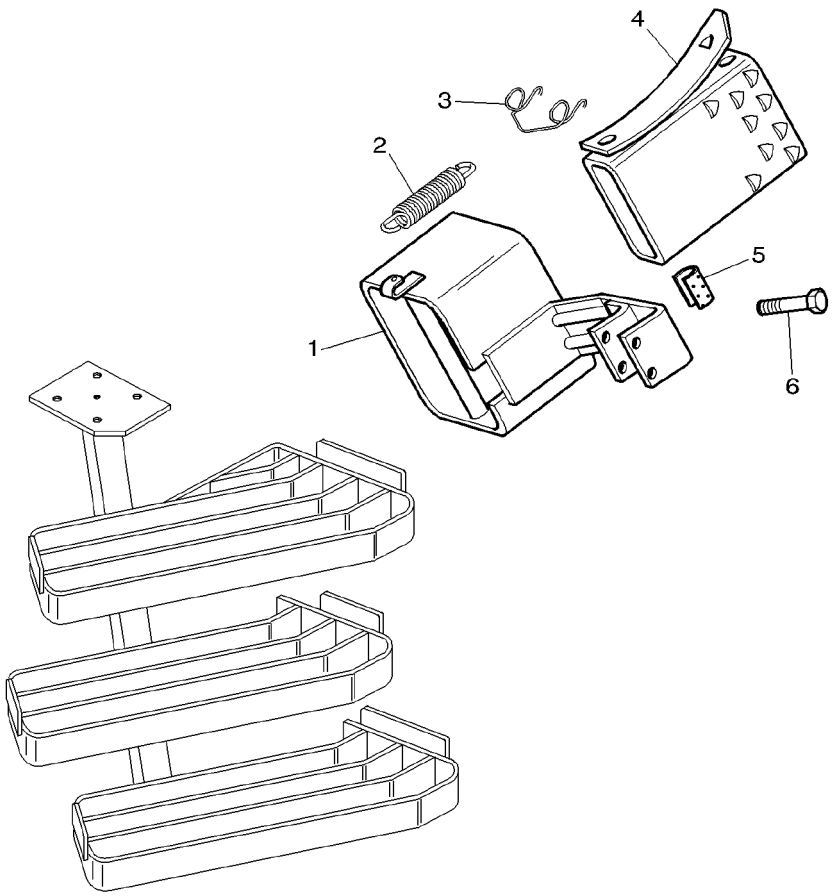

1	3715111M91		**1**	SUPPORT	SUPPORT SUPPORTO	LAGERUNG DISPOS.DE SOSTEN
2	3616740M2		**1**	SPRING	RESSORT MOLLA	FEDER MUELLE
3	3715112M1		**1**	STEM	TIGE STELO	STIEL VASTAGO
4	3042422M1		**2**	CHOCK	CALE PASSACAVO	UNTERLEG-KEIL CALZA
5	3619191M1	◀▶ 42MM	**2**	GASKET	JOINT GUARNIZIONE	DICHTSCHEIBE EMPAQUETADURA.
6	3015134X1	M6X65	**2**	SCREW	VIS VITE	SCHRAUBE TORNILLO

150

Epicyclic Unit
Reducteur Epicycloidal
Untersetzungsgetriebe
Gruppo Epicicloidale
Unidad Epicicloidal

150-5

Creeper Gear Dynashift Transmission
Reducteur De Vitesse Rampante Boite De Vitesse Dynashift
Kriechganguebersetzung Getriebe Dynashift
Riduttore Per Lenta Velocita Transmision Dynashift
Reductore De Cambio Transmision Dynashift

1-ZE96-007-A

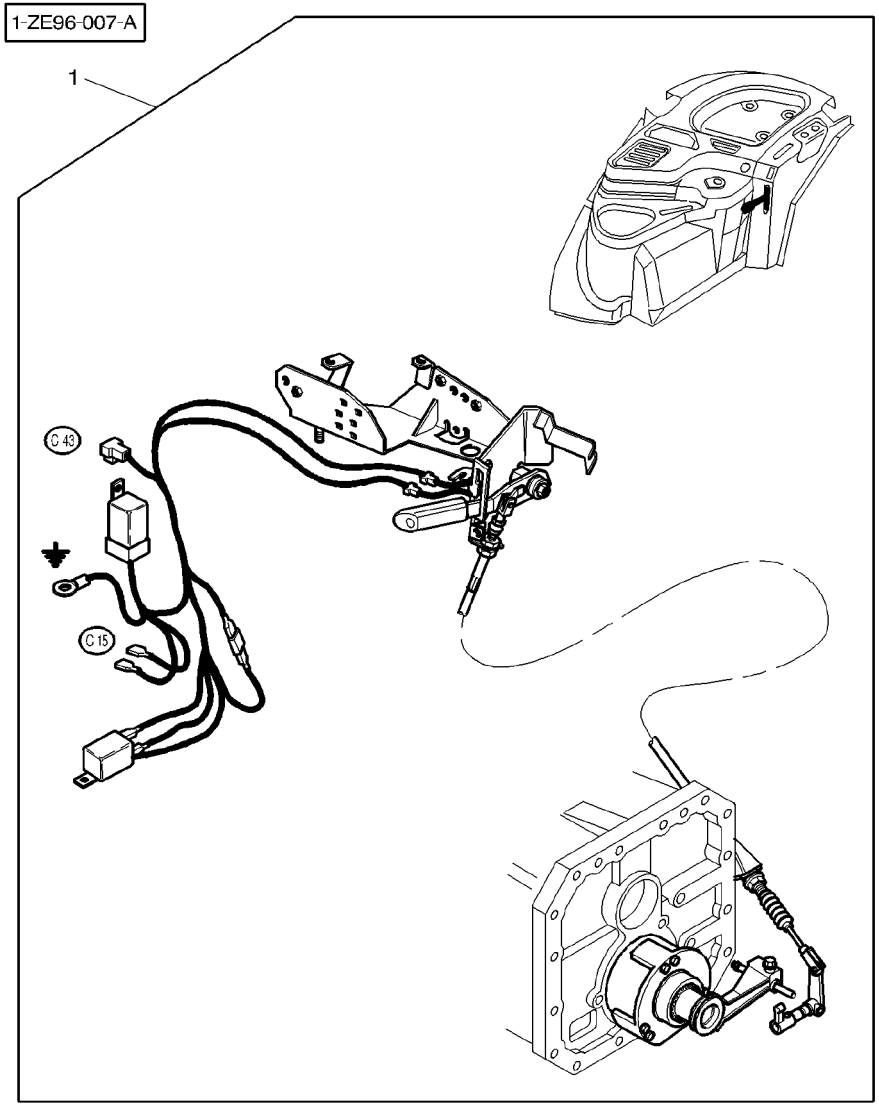

1	3783825M11	[A]	**1**	REDUCER	REDUCTEUR RIDUTTORE	REDUZIERSTUECK REDUCTOR

[A] FOR SERVICE BREAKDOWN REFER TO TRACTOR BOOK
POUR LES DETAILS VOIR CATALOGUE TRACTEUR
EINZENTEILE SIEHE SCHLEPPER LISTE
PER DETTAGLIO VEDERE CATALOGO TRATTORE
PARA LOS DETALLES REFERIRSE A LIBRO TRACTOR

Epicyclic Unit
Reducteur Epicycloidal
Untersetzungsgetriebe
Gruppo Epicicloidale
Unidad Epicicloidal

150-10

Creeper Gear Full Powershift Transmission
Reducteur De Vitesse Rampante Boite De Vitesse Full Powershift
Kriechganguebersetzung Getriebe Full Powershift
Riduttore Per Lenta Velocita Transmision Full Powershift
Reductore De Cambio Transmision Full Powershift

1-ZE96-008-A

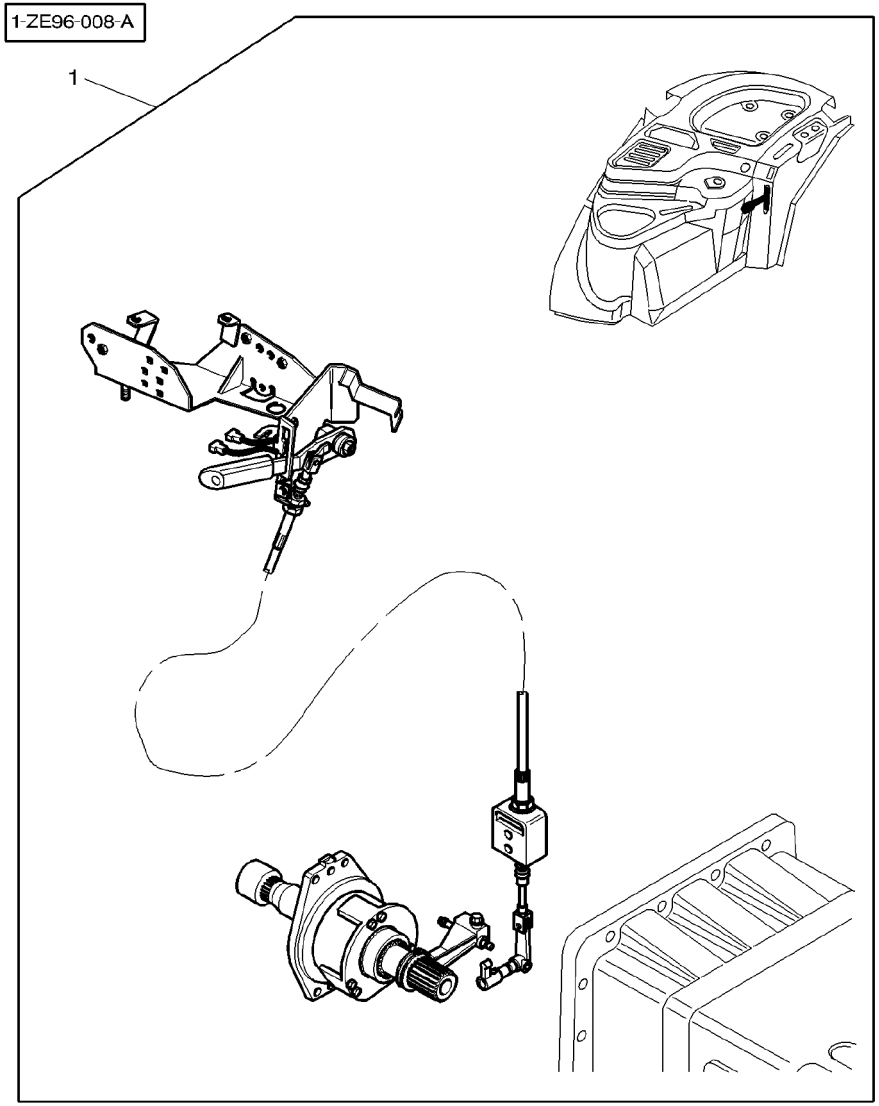

1	3783826M11	[A]	**1** REDUCER	REDUCTEUR RIDUTTORE	REDUZIERSTUECK REDUCTOR

[A] FOR SERVICE BREAKDOWN REFER TO TRACTOR BOOK
POUR LES DETAILS VOIR CATALOGUE TRACTEUR
EINZENTEILE SIEHE SCHLEPPER LISTE
PER DETTAGLIO VEDERE CATALOGO TRATTORE
PARA LOS DETALLES REFERIRSE A LIBRO TRACTOR

Front Linkage 35000n Attelage Avant 35000n Vordere Kupplung 35000n Attacco Anteriore 35000n Enganche Delantero 35000n	150-15	With Dynashift Avec Dynashift Mit Dynashift Con Dynashift Con Dynashift

1-ZQ37-017-A

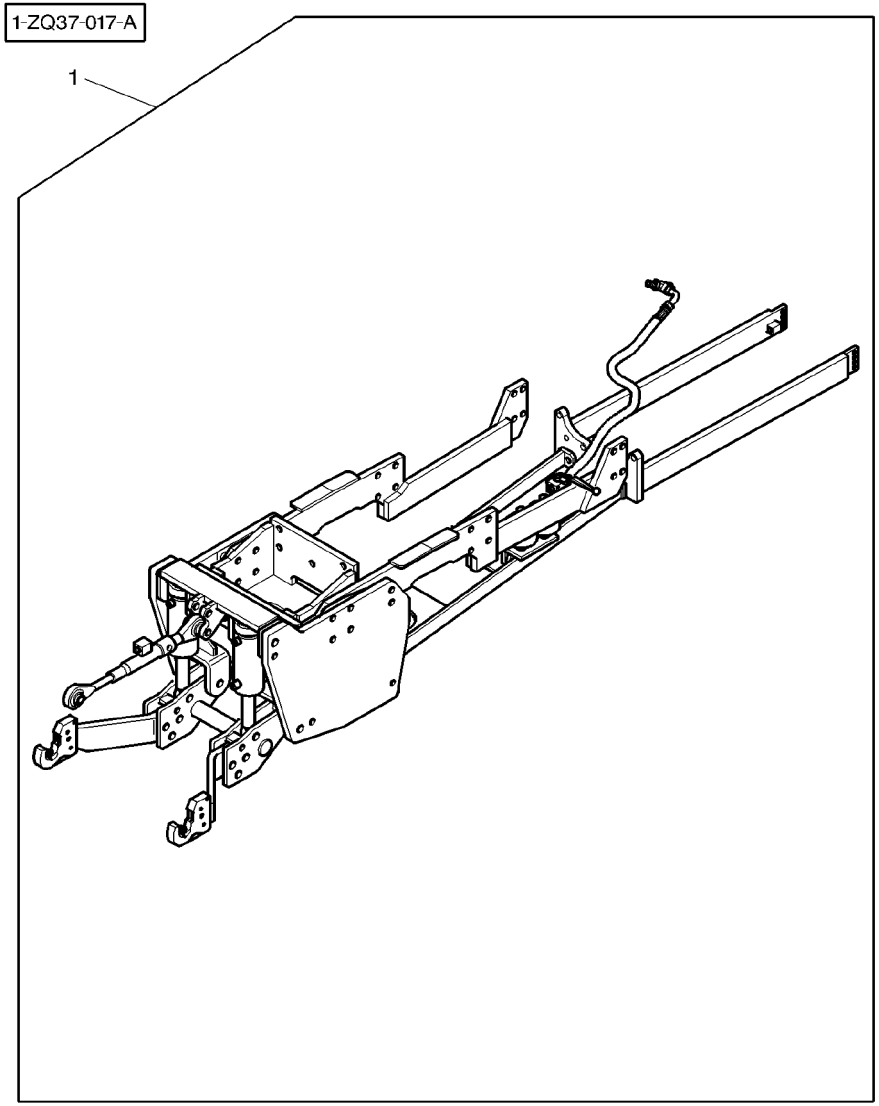

1	3783038M93	[A]	**1**	HITCH	ATTELAGE ATTACCO ANHAENGEKUPPLUNG ENGANCHE

[A] FOR SERVICE BREAKDOWN REFER TO TRACTOR BOOK
POUR LES DETAILS VOIR CATALOGUE TRACTEUR
EINZENTEILE SIEHE SCHLEPPER LISTE
PER DETTAGLIO VEDERE CATALOGO TRATTORE
PARA LOS DETALLES REFERIRSE A LIBRO TRACTOR

Front Linkage 35000n Attelage Avant 35000n Vordere Kupplung 35000n Attacco Anteriore 35000n Enganche Delantero 35000n	150-20	With Full Powershift Avec Full Powershift Mit Full Powershift Con Full Powershift Con Full Powershift

1-ZQ37-016-A

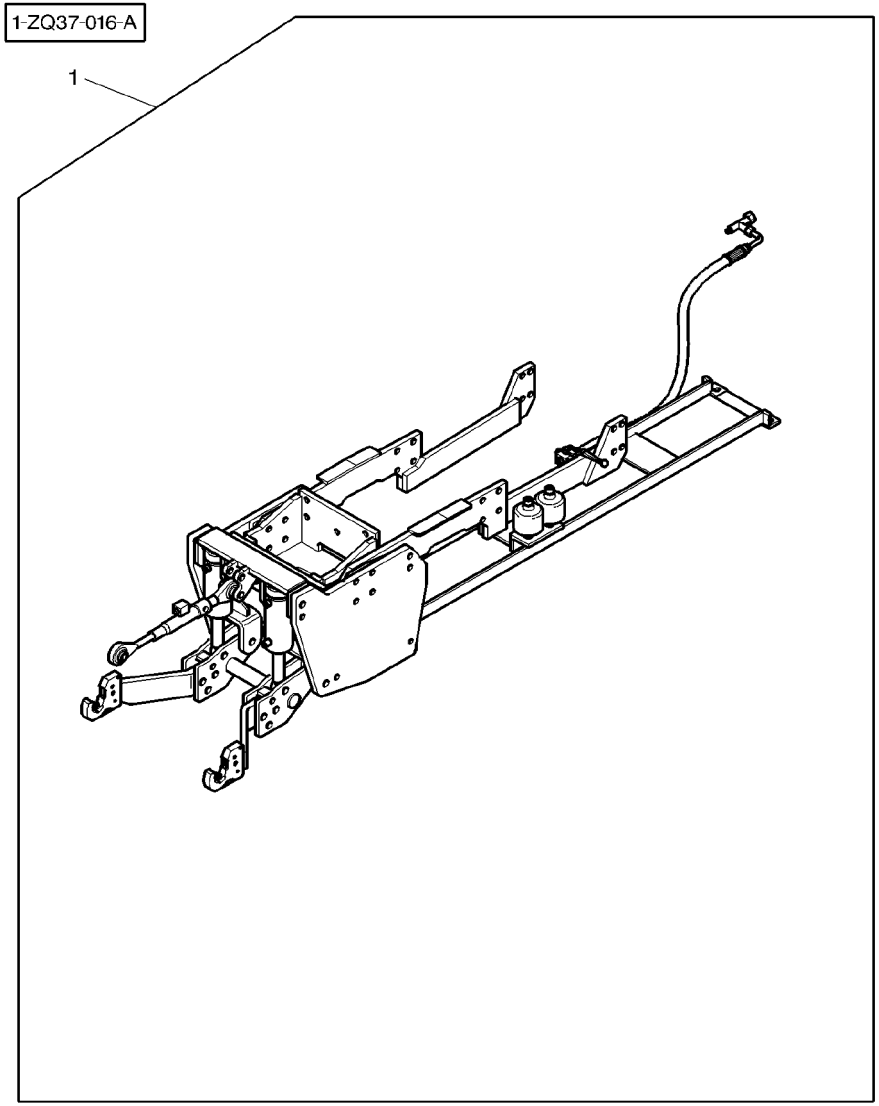

1	3783036M92	[A]	**1** HITCH	ATTELAGE ATTACCO	ANHAENGEKUPPLUNG ENGANCHE

[A] FOR SERVICE BREAKDOWN REFER TO TRACTOR BOOK
POUR LES DETAILS VOIR CATALOGUE TRACTEUR
EINZENTEILE SIEHE SCHLEPPER LISTE
PER DETTAGLIO VEDERE CATALOGO TRATTORE
PARA LOS DETALLES REFERIRSE A LIBRO TRACTOR

Front Linkage 35000n
Attelage Avant 35000n
Vordere Kupplung 35000n
Attacco Anteriore 35000n
Enganche Delantero 35000n

150-25

Two Ways Kit For Rams
Kit Double Effet Pour Verins
Doppelwirend-Sazt Fur Hydr Zylinder
Kit Dopio Effetto Per Cilindro Idraulico
Kit Doble Accion Para Ariete

1-ZQ37-022-A

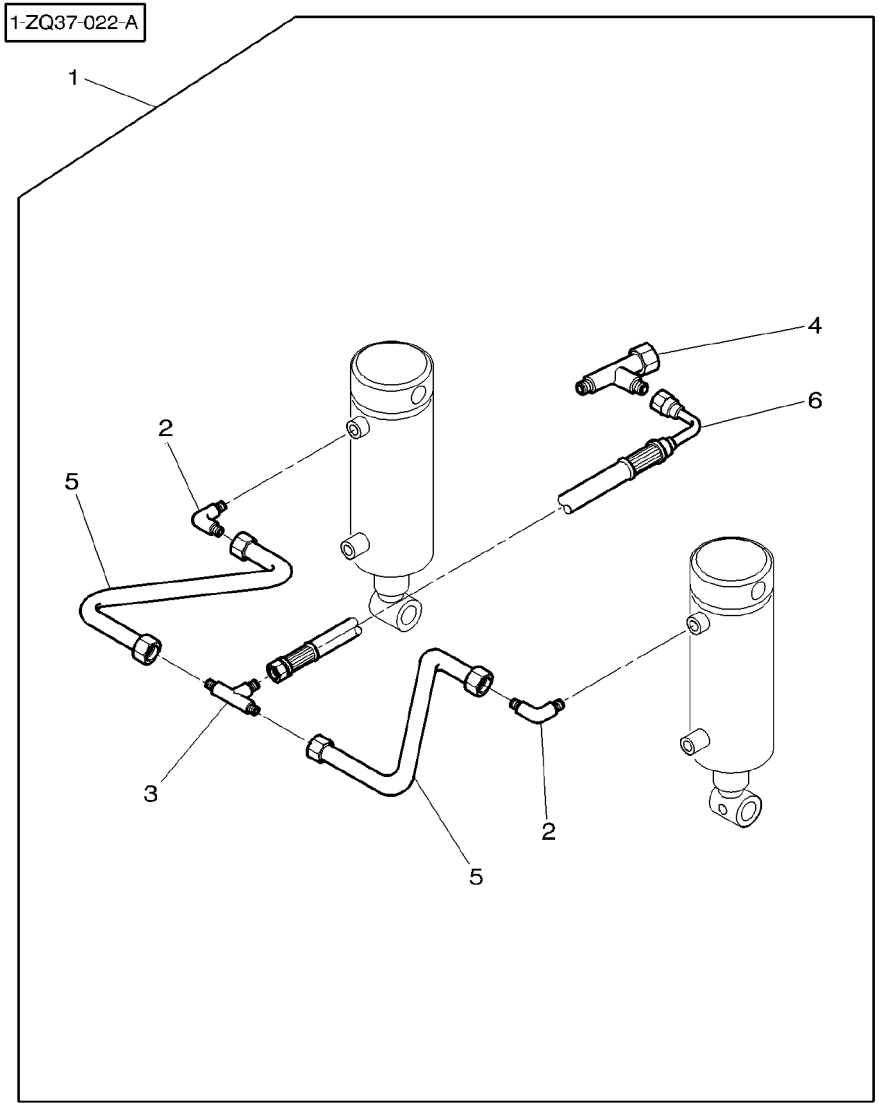

1	3903533M91		**1**	KIT,FUEL FITTING	KIT ALIMENTATION KIT TUBI COMB.	PUMPENANBAUSATZ. JGO.MONT.COMBUST
2	3900868M1	1 ∅ 3/8"	**2**	ELBOW	COUDE GOMITO	WINKELSTUECK CODO
3	3902227M1	1	**1**	TEEPIECE	TE RACCORDO A T	T-STUECK PIEZA EN T
4	3782998M1	1	**1**	TEEPIECE	TE RACCORDO A T	T-STUECK PIEZA EN T
5	3783011M1	1	**2**	TUBE	TUBE TUBO	ROHR TUBO
6	3903526M1	1 ◄► 5000MM	**1**	HYDR HOSE	FLEXIBLE TUBOFLEX IDRAUL	HYDR SCHLAUCH TUBO HIDRAULICO

Trailor Brake
Freinage De Remorque
Anhaenger−Breme
Freno Rimorchio
Frenaje De Remolque

150-30

With Pump 45cc
Avec Pompe 45cc
Mit Pumpe 45cc
Con Pompa 45cc
Con Bomba 45cc

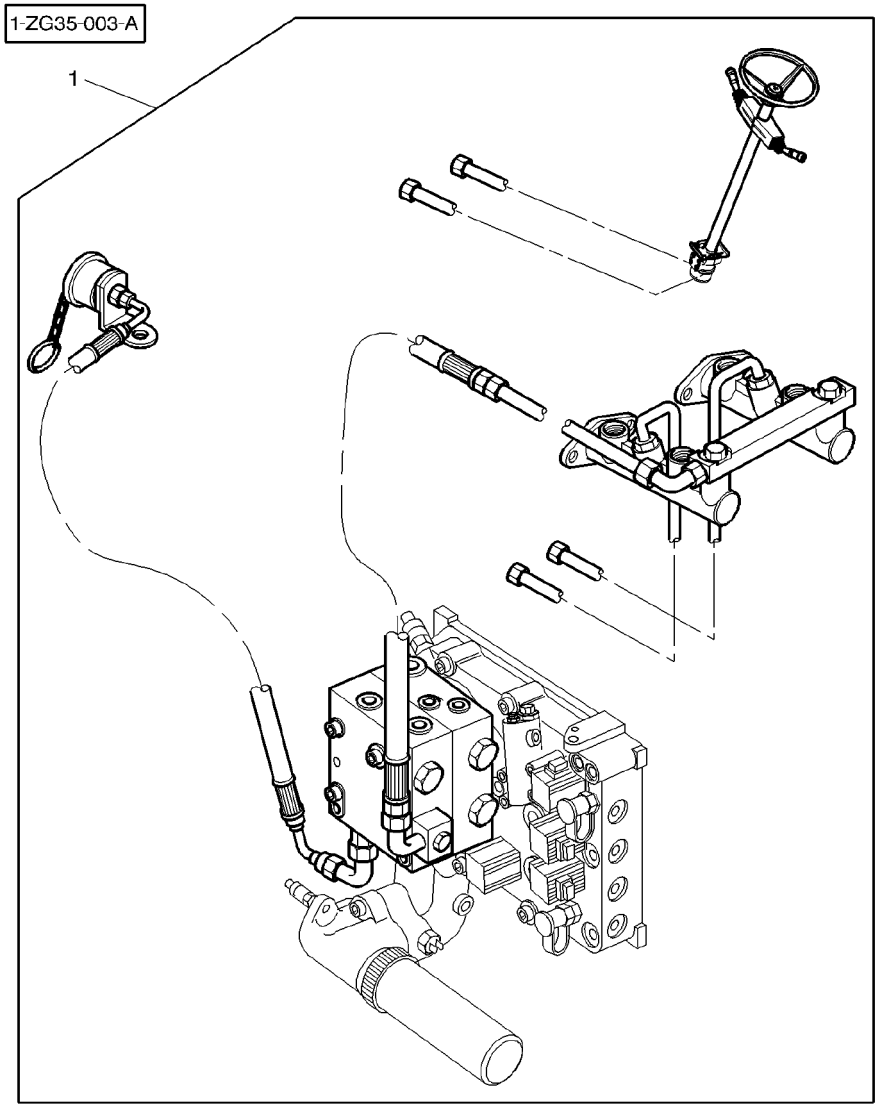

1	3781676M11	[ABC]	**1**	KIT,TRAILR BRAKE	JEUFREINREMORQUE KIT FRENO RIMORC	SATZ ANHAENGERBR JGO.FRENO REMOLQ
1	3781677M11	[ABD]	**1**	KIT,TRAILR BRAKE	JEUFREINREMORQUE KIT FRENO RIMORC	SATZ ANHAENGERBR JGO.FRENO REMOLQ
1	3781031M11	[ACE]	**1**	KIT,TRAILR BRAKE	JEUFREINREMORQUE KIT FRENO RIMORC	SATZ ANHAENGERBR JGO.FRENO REMOLQ
1	3781036M11	[ADE]	**1**	KIT,TRAILR BRAKE	JEUFREINREMORQUE KIT FRENO RIMORC	SATZ ANHAENGERBR JGO.FRENO REMOLQ

[A] FOR SERVICE BREAKDOWN REFER TO TRACTOR BOOK
POUR LES DETAILS VOIR CATALOGUE TRACTEUR
EINZENTEILE SIEHE SCHLEPPER LISTE
PER DETTAGLIO VEDERE CATALOGO TRATTORE
PARA LOS DETALLES REFERIRSE A LIBRO TRACTOR

[B] TRACTOR WITH PLATFORM
TRACTEUR AVEC PLATEFORME
SCHLEPPER MIT PLATTFORM
TRATTORE CON PIATTAFORMA
TRACTOR CON PLATAFORMA

[C] WITH MECHANICAL BRAKES
AVEC FREIN MECANIQUE
MIT MECHANISCHE BREMSE
CON FRENI MECCANICO
CON FRENO MECANICO

[D] WITH ASSISTED BRAKE
AVEC FREIN ASSISTE
MIT HILSKRAFTBREMSE
CON FRENO ASSISTITE
CON FRENO ASISTIDE

[E] TRACTOR WITH CAB
TRACTEURS AVEC CABINE
SCHLEPPER MIT KABINE
TRATTORE CON CABINA
TRACTOR CON CABINA

Trailor Brake
Freinage De Remorque
Anhaenger−Breme
Freno Rimorchio
Frenaje De Remolque

150-35

With Pump 60cc
Avec Pompe 60cc
Mit Pumpe 60cc
Con Pompa 60cc
Con Bomba 60cc

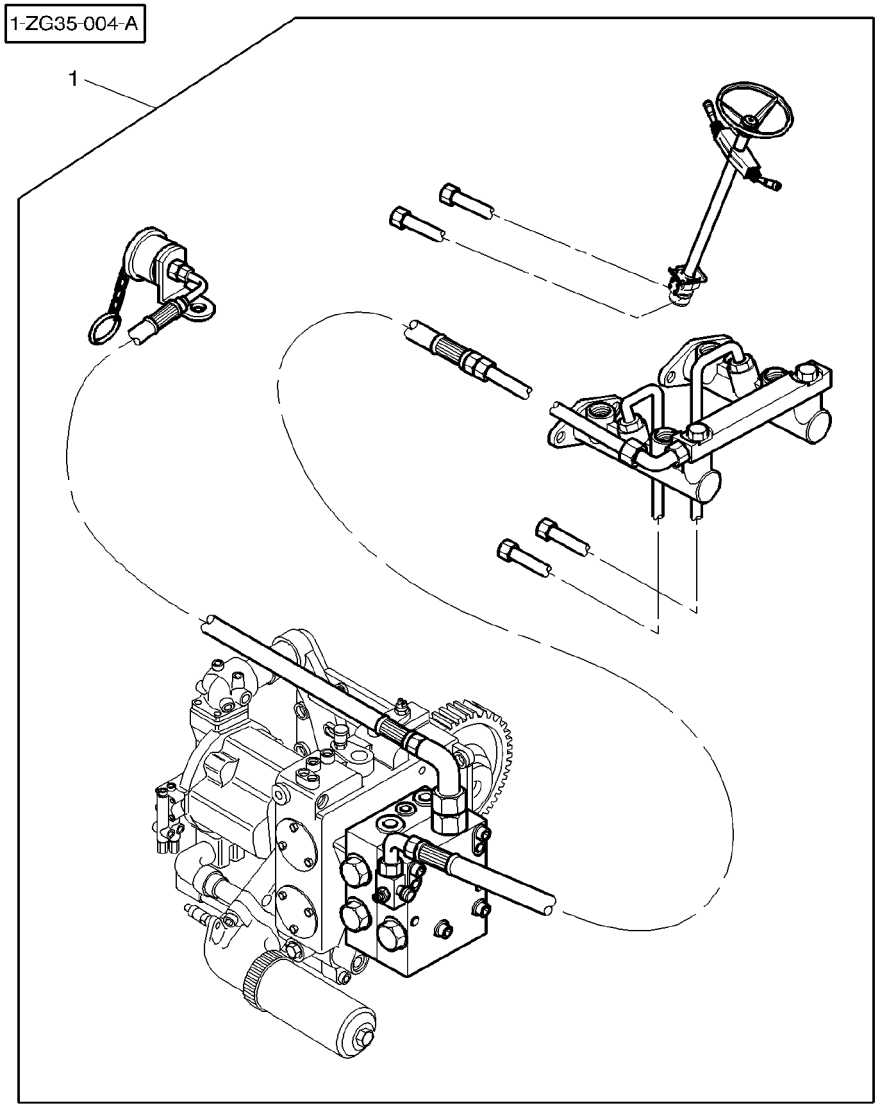

1	3781678M11	[ABCF]	**1**	KIT,TRAILR BRAKE	JEUFREINREMORQUE SATZ ANHAENGERBR KIT FRENO RIMORC JGO.FRENO REMOLQ
1	3781679M11	[ABDF]	**1**	KIT,TRAILR BRAKE	JEUFREINREMORQUE SATZ ANHAENGERBR KIT FRENO RIMORC JGO.FRENO REMOLQ
1	3781674M11	[ACDEF]	**1**	KIT,TRAILR BRAKE	JEUFREINREMORQUE SATZ ANHAENGERBR KIT FRENO RIMORC JGO.FRENO REMOLQ

[A] FOR SERVICE BREAKDOWN REFER TO TRACTOR BOOK
POUR LES DETAILS VOIR CATALOGUE TRACTEUR
EINZENTEILE SIEHE SCHLEPPER LISTE
PER DETTAGLIO VEDERE CATALOGO TRATTORE
PARA LOS DETALLES REFERIRSE A LIBRO TRACTOR

[B] TRACTOR WITH PLATFORM
TRACTEUR AVEC PLATEFORME
SCHLEPPER MIT PLATTFORM
TRATTORE CON PIATTAFORMA
TRACTOR CON PLATAFORMA

[C] WITH MECHANICAL BRAKES
AVEC FREIN MECANIQUE
MIT MECHANISCHE BREMSE
CON FRENI MECCANICO
CON FRENO MECANICO

[D] WITH ASSISTED BRAKE
AVEC FREIN ASSISTE
MIT HILSKRAFTBREMSE
CON FRENO ASSISTITE
CON FRENO ASISTIDE

[E] TRACTOR WITH CAB
TRACTEURS AVEC CABINE
SCHLEPPER MIT KABINE
TRATTORE CON CABINA
TRACTOR CON CABINA

[F] WITH FULL POWERSHIFT
AVEC FULL POWERSHIFT
MIT FULL POWERSHIFT
CON FULL POWERSHIFT
CON FULL POWERSHIFT

Auxiliary Distributor
Distributeur Auxiliaire
Zuzatzverteiler
Distributore Auxiliarie
Distribuidor Auxiliar

150-40

4 Th Spool Valve Kit For Cab
Kit 4eme Distributeur Pour Cabine
Vierte Stuerventil −Satz Fur Kabine
Kit Quarto Distributor Per Cabina
Juego Cuarto Distribuidor Para Cabine

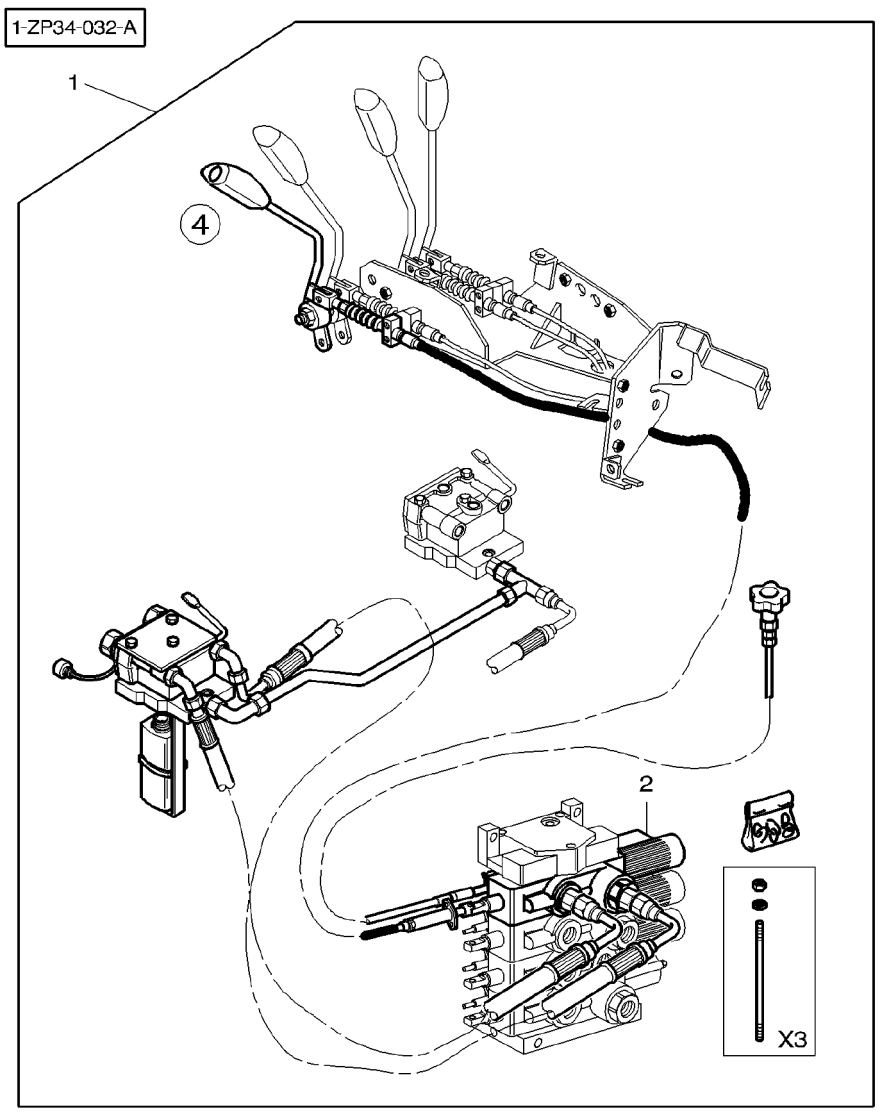

1	3783496M11	[BA]	**1**	KIT, CONTRL VLVE	JEU DISTRIBUTEUR KIT DISTRIBUTORE	SATZSTEUERVENTIL JGO.VALV.CONTROL
1	3783497M11	[BC]	**1**	KIT, CONTRL VLVE	JEU DISTRIBUTEUR KIT DISTRIBUTORE	SATZSTEUERVENTIL JGO.VALV.CONTROL
2	3713928M3	1 [A]	**1**	DISTRIBUTOR	DISTRIBUTEUR DISTRIBUTORE	VERTEILER DISTRIBUIDOR

[A] 4 FLOATING POSITIONS DIST,FLOW ADJUST,KICK−OUT,ZER O LEAK
DIST 4 POSITIONS FLOTTANTES,REGLAGE DE DEBIT,KICK− OUT,FUITE ZERO
4 FACH VERTEILERVENTIL MIT HYDR ENDABSCHALTUNG EINSTELLUNG MENGE,MIT NULL−LECKAGEN
DISTRIBUTORE A 4 POSIZIONI,REGOLATORE DI FLUSSO,SO LLEVATORE IDRAULICO,NESSUNA PERDITA
4 DISTRIBUIDOR CON POSICION FLOTANTE,REGULADOR DE CAUDAL,DESCONEXION POR PRESION,CERO FUGA

[B] FOR SERVICE BREAKDOWN REFER TO TRACTOR BOOK
POUR LES DETAILS VOIR CATALOGUE TRACTEUR
EINZENTEILE SIEHE SCHLEPPER LISTE
PER DETTAGLIO VEDERE CATALOGO TRATTORE
PARA LOS DETALLES REFERIRSE A LIBRO TRACTOR

[C] 4 FLOAT POSIT DIST,FLOW ADJUST,KICK−OUT W 2 OVERP RES.VALVE AND RESUPPLYING FOR HYDRAULIC MOTOR
DIST 4 POS.FLOT,REGL DE DEBIT,KICK−OUT,AV. 2CLAPET S DE SURPRESSION ET REALIMENTATION POUR MOTEUR HYD
VERTEILER 4 DURCH.POSITONEN,DURFLUSS EINSTELLUNG,K ICK OUT,RASTUNG FUER HYDR.MOTOR ANWENDUNG
DIST A 4 POSIZIONI FLOTTANTI,REGOLATORE DI FLUSSO, REBALTATOE,2 VAL. NO RITOR SOVRAPRESSSIONE REALIM.
DIST A 4 POSICION FLOTANTE,DEBITO REGULABLE ,REBAL TATORE,2 VAL.DE GRANO SOBREPRESION REALIM. MOT. HI

Aboard Computer
Ordinateur De Bord
Bord.Computer
A Pannello Computer
Computador A Bordo

150-45

With Dynashift
Avec Dynashift
Mit Dynashift
Con Dynashift
Con Dynashift

1-ZU31-003-A

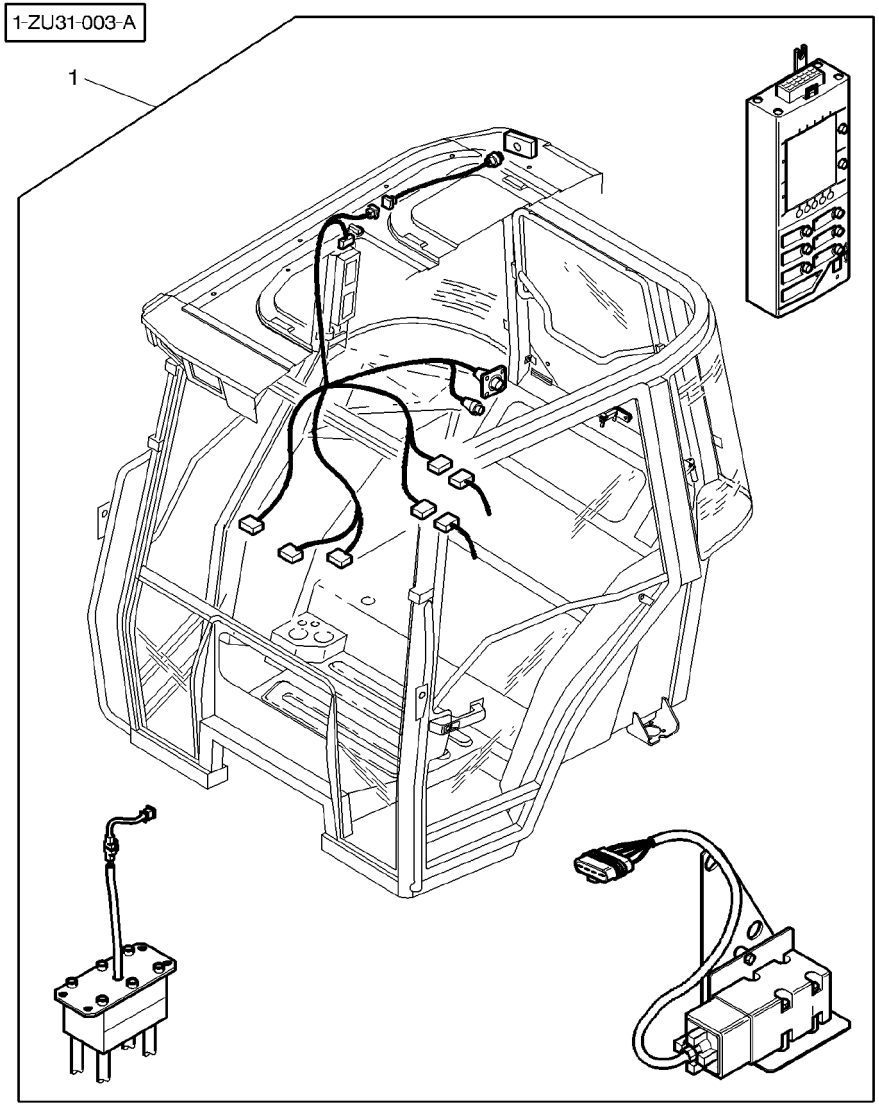

1	3903413M11	[CB] (GB) GHZ 24.300	**1**	ACCESSORY CODE	CODE ACCESSOIRE CODICEACCESSORIO	ZUBEHOER-CODE CODIGO ACCESORIO
1	3903415M11	[AB] GHZ 24.125	**1**	ACCESSORY CODE	CODE ACCESSOIRE CODICEACCESSORIO	ZUBEHOER-CODE CODIGO ACCESORIO

[A] ORDER SEPARATELY ABOARD COMPUTER DECALS
COMMANDER SEPAREMENT LES DECALCOMANIES DE L'ORDINATEUR DE BORD
GETRENNT BESTELLEN ABZIEHBILDER BORD COMPUTER
NON SERVITO ORDINARE CALCOMANIA DE A PANNELLO COMPUTORE
PEDIR SEPARADAMENTE CALCOMANIAS DEL COMPUTADOR ABORDO

[B] FOR SERVICE BREAKDOWN REFER TO TRACTOR BOOK
POUR LES DETAILS VOIR CATALOGUE TRACTEUR
EINZENTEILE SIEHE SCHLEPPER LISTE
PER DETTAGLIO VEDERE CATALOGO TRATTORE
PARA LOS DETALLES REFERIRSE A LIBRO TRACTOR

[C] ABOARD COMPUTER DECALS INCLUDED IN KIT
LES DECALCOMANIES DE L'ORDINATEUR DE BORD INCLUS D ANS LE KIT
ABZIEHBILDER BORD COMPUTER ENTHALTEN IN REPARATURS ATZ
CALCOMANIA DE A PANNELLO COMPUTORE COMPRESI NEL KI T
CALCOMANIAS DEL COMPUTADOR ABORDO INCLUYE EN EL JU GO

Aboard Computer
Ordinateur De Bord
Bord.Computer
A Pannello Computer
Computador A Bordo

150-50

With Full Powershift
Avec Full Powershift
Mit Full Powershift
Con Full Powershift
Con Full Powershift

1-ZU31-004-A

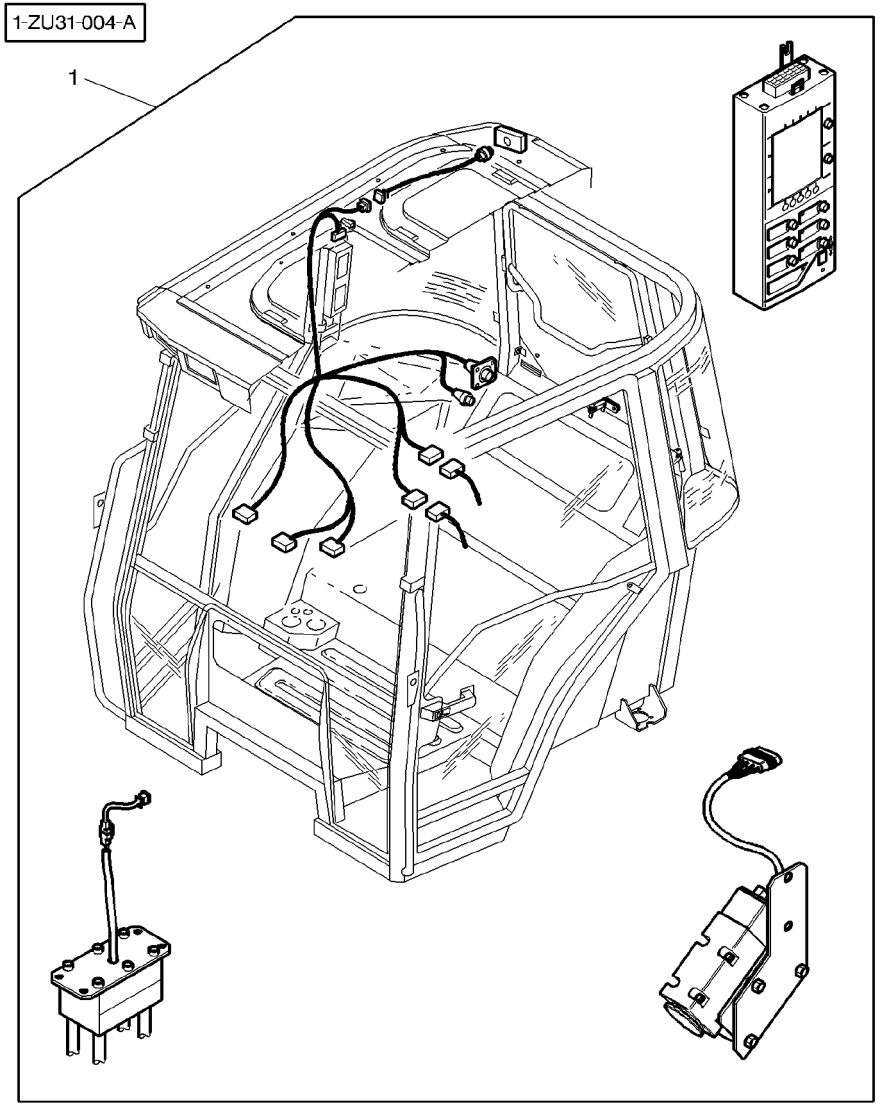

1	3903414M11	[CB] (GB) GHZ 24.300	**1**	ACCESSORY CODE	CODE ACCESSOIRE CODICEACCESSORIO	ZUBEHOER-CODE CODIGO ACCESORIO
1	3903416M11	[AB] GHZ 24.125	**1**	ACCESSORY CODE	CODE ACCESSOIRE CODICEACCESSORIO	ZUBEHOER-CODE CODIGO ACCESORIO

[A] ORDER SEPARATELY ABOARD COMPUTER DECALS
COMMANDER SEPAREMENT LES DECALCOMANIES DE L'ORDINATEUR DE BORD
GETRENNT BESTELLEN ABZIEHBILDER BORD COMPUTER
NON SERVITO ORDINARE CALCOMANIA DE A PANNELLO COMPUTORE
PEDIR SEPARADAMENTE CALCOMANIAS DEL COMPUTADOR ABORDO

[B] FOR SERVICE BREAKDOWN REFER TO TRACTOR BOOK
POUR LES DETAILS VOIR CATALOGUE TRACTEUR
EINZENTEILE SIEHE SCHLEPPER LISTE
PER DETTAGLIO VEDERE CATALOGO TRATTORE
PARA LOS DETALLES REFERIRSE A LIBRO TRACTOR

[C] ABOARD COMPUTER DECALS INCLUDED IN KIT
LES DECALCOMANIES DE L'ORDINATEUR DE BORD INCLUS D ANS LE KIT
ABZIEHBILDER BORD COMPUTER ENTHALTEN IN REPARATURS ATZ
CALCOMANIA DE A PANNELLO COMPUTORE COMPRESI NEL KI T
CALCOMANIAS DEL COMPUTADOR ABORDO INCLUYE EN EL JU GO

Appliance Bracket Boarded For Cab
Support Appareil Embarque Pour Cabine
Gerathaltearm Gegehen Fur Kabine
Supporto Fissagg Imbacare Per Cabina
Soporte Aparat Embarcardo Para Cabina Tractor

150-55

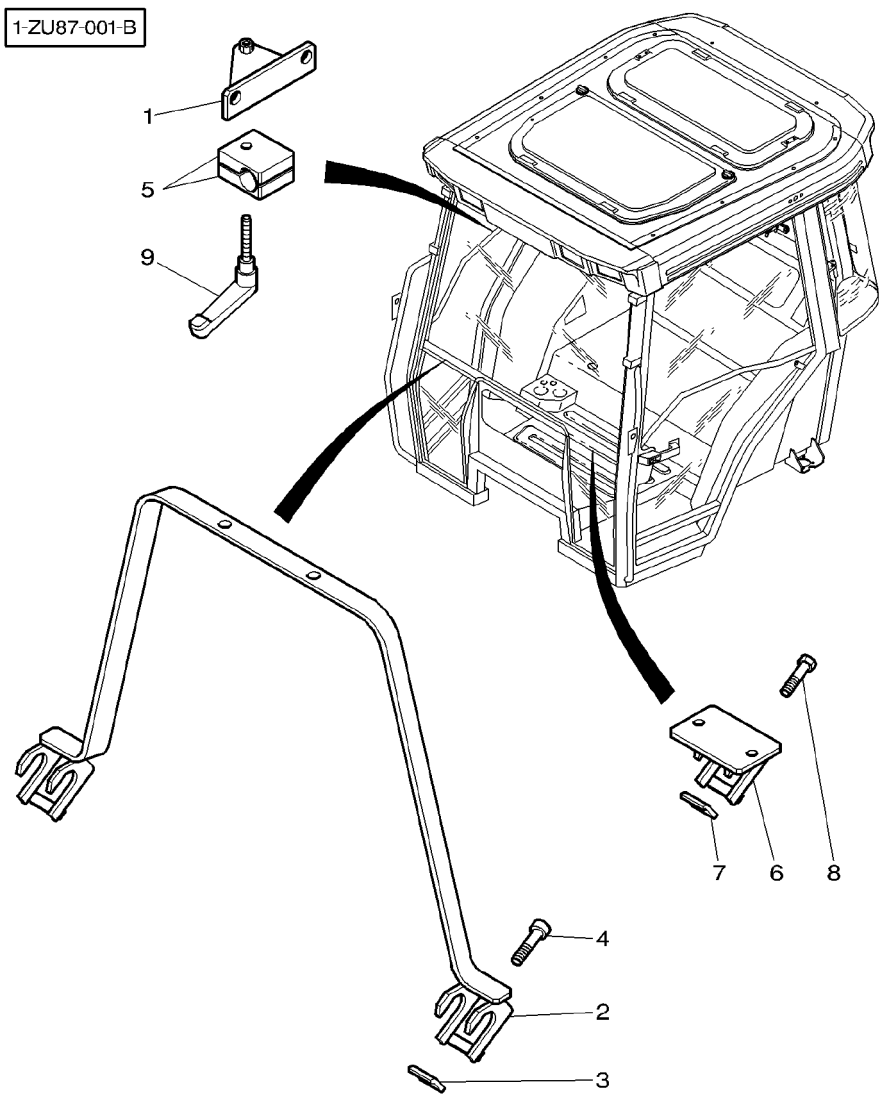

1	3782484M1	[C] M8	**1**	HANDLE	POIGNEE MANIGLIA	HANDGRIFF MANETA
2	3782478M91	[A]	**1**	SAFETY FRAME	ARCEAU TELAIO SICUREZZA	SICHERH.RAHMEN BAST.SEGURIDAD
3	3782479M1		**2**	COUNTERPLATE	CONTRE PLAQUE CONTROPIASTRA	GEGENPLATTE CONTRAPLACA
4	3010177X1	M8X90	**2**	SCREW	VIS VITE	SCHRAUBE TORNILLO
5	3782482M1	[C]	**2**	SUPPORT	SUPPORT SUPPORTO	LAGERUNG DISPOS.DE SOSTEN
6	3782480M91	[B]	**1**	SUPPORT	SUPPORT SUPPORTO	LAGERUNG DISPOS.DE SOSTEN
7	3782479M1		**1**	COUNTERPLATE	CONTRE PLAQUE CONTROPIASTRA	GEGENPLATTE CONTRAPLACA
8	3010177X1	M8X90	**1**	SCREW	VIS VITE	SCHRAUBE TORNILLO
9	3782481M1	[C]	**1**	ANGLE	EQUERRE ANGOLO	WINKEL ANGULO

[A] ON INSTRUMENT PANEL
SUR TABLEAU DE BORD
AUF ARMATURENBRETT
SOPRA IL PANELLO STRUMENTI
SOBRE PANEL DE INSTRUMENTOS

[B] ON TRANSVERSE CABINE
SUR TRAVERSE CABINE
AUF QUERTRAGER KABINE
SOPRA LA TRASVERSALE CABINA
SOBRE TRANSVERSAL CABINA

[C] ON CAB DOOR
SUR LA PORTE DE LA CABINE
AUF DIE KABINETUER
SOPRA LA POTA CABINA
SOBRE PUERTA CABINA

1-ZU44-004-A

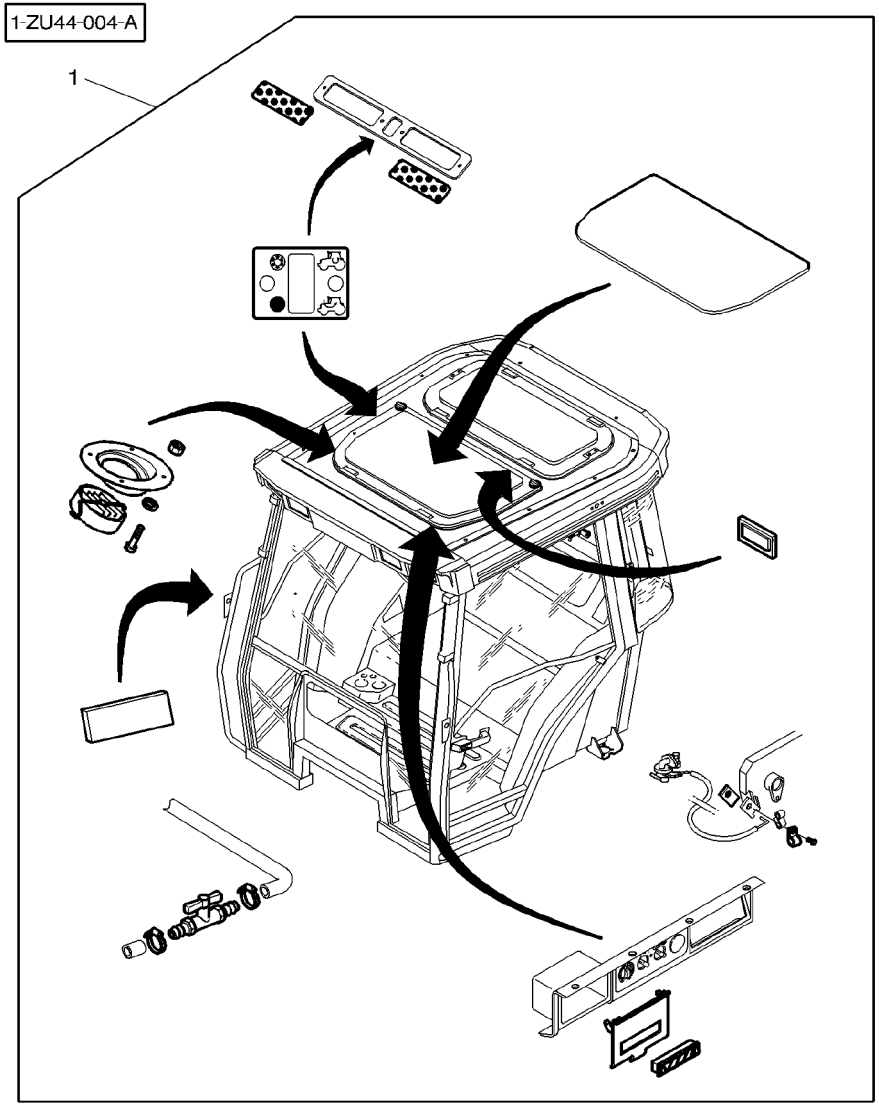

1	3784595M11	[A] US AA ZA	**1**	KIT AIR CONDITI	JEU AIR CONDITI KIT CONDIZIONA	SATZ KLIMAANLAGE JUEGO ACON AIRE

[A] FOR SERVICE BREAKDOWN REFER TO TRACTOR BOOK
POUR LES DETAILS VOIR CATALOGUE TRACTEUR
EINZENTEILE SIEHE SCHLEPPER LISTE
PER DETTAGLIO VEDERE CATALOGO TRATTORE
PARA LOS DETALLES REFERIRSE A LIBRO TRACTOR

Rear Window Wiper
Essuie Glace Arriere
Hinterscheibenwischer
Tergicristallo Parte Posteriore
Limpiaparabrisas Parte Trasera

150-65

1-ZU25-002-A

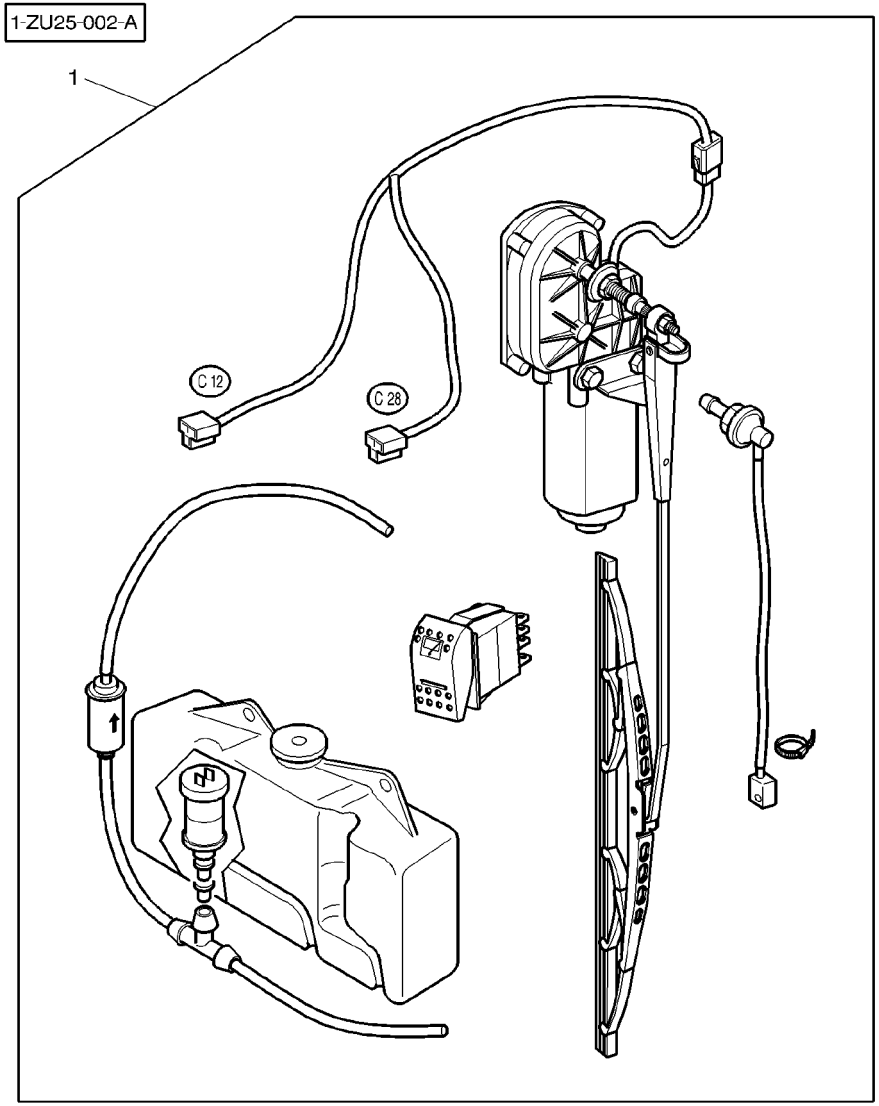

1	3777332M11	[A]	**1**	ACCESSORY CODE	CODE ACCESSOIRE CODICEACCESSORIO ZUBEHOER-CODE CODIGO ACCESORIO
1	3778374M11	[AB]	**1**	KIT, WIPER	JEU ESSUIE GLACE KIT TERGICRISTAL WISCHERSATZ JGO.LIMPIA PARAB

[A] FOR SERVICE BREAKDOWN REFER TO TRACTOR BOOK
POUR LES DETAILS VOIR CATALOGUE TRACTEUR
EINZENTEILE SIEHE SCHLEPPER LISTE
PER DETTAGLIO VEDERE CATALOGO TRATTORE
PARA LOS DETALLES REFERIRSE A LIBRO TRACTOR

[B] WITH HIGH VISIBILITY ROOF
AVEC TOIT HAUTE VISIBILITE
MIT DACH MIT SONNENDACH
CON TETTO ALTA VISIBILITA
CON TEJADO ALTA VISIBILIDAD

Secondary Seat
Siege Secondaire
Beifahrersitz
Sedile Secondario
Asiento

150-70

1-ZV03-002-A

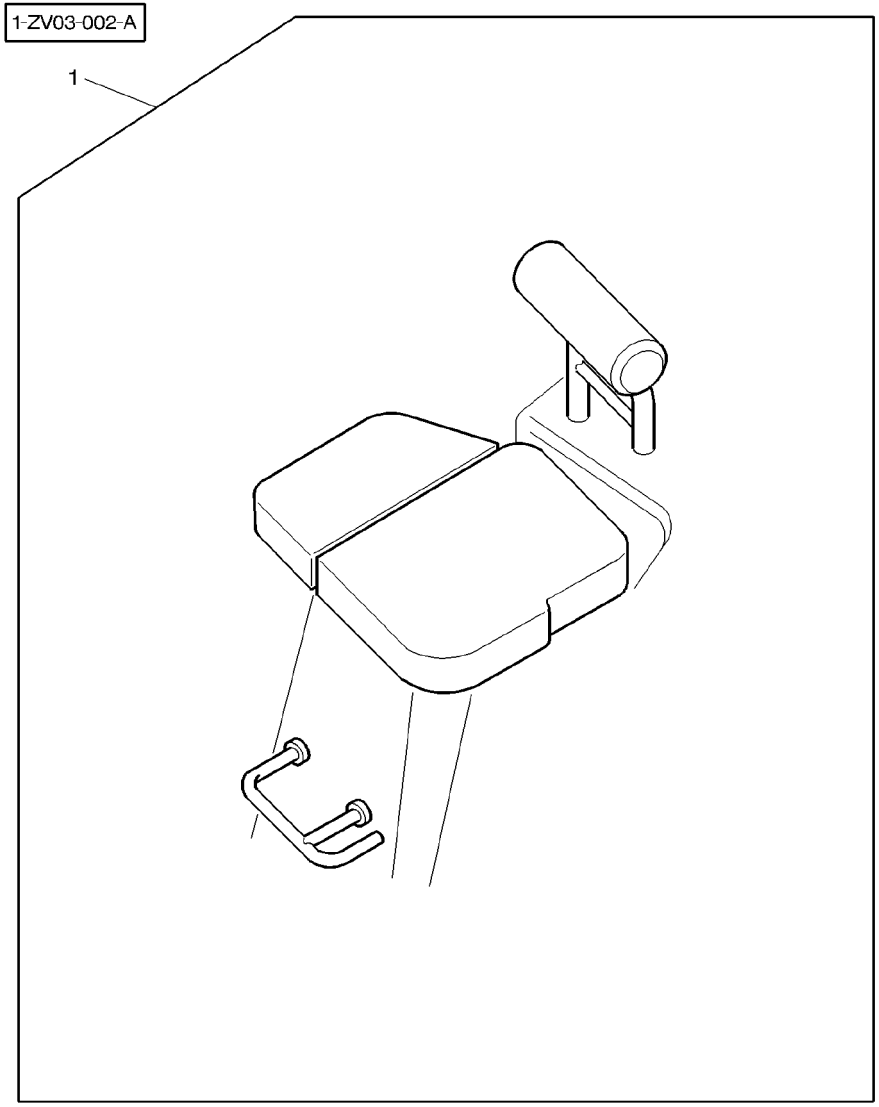

1	3781247M11	[A]	**1** ACCESSORY CODE	CODE ACCESSOIRE CODICEACCESSORIO	ZUBEHOER-CODE CODIGO ACCESORIO

[A] FOR SERVICE BREAKDOWN REFER TO TRACTOR BOOK
POUR LES DETAILS VOIR CATALOGUE TRACTEUR
EINZENTEILE SIEHE SCHLEPPER LISTE
PER DETTAGLIO VEDERE CATALOGO TRATTORE
PARA LOS DETALLES REFERIRSE A LIBRO TRACTOR

Seat Belt
Ceinture De Securite
Sicherheitsgurt
Cintura Sicurezza
Cinturon De Seguridad

150-75

1-ZZ02-002-A

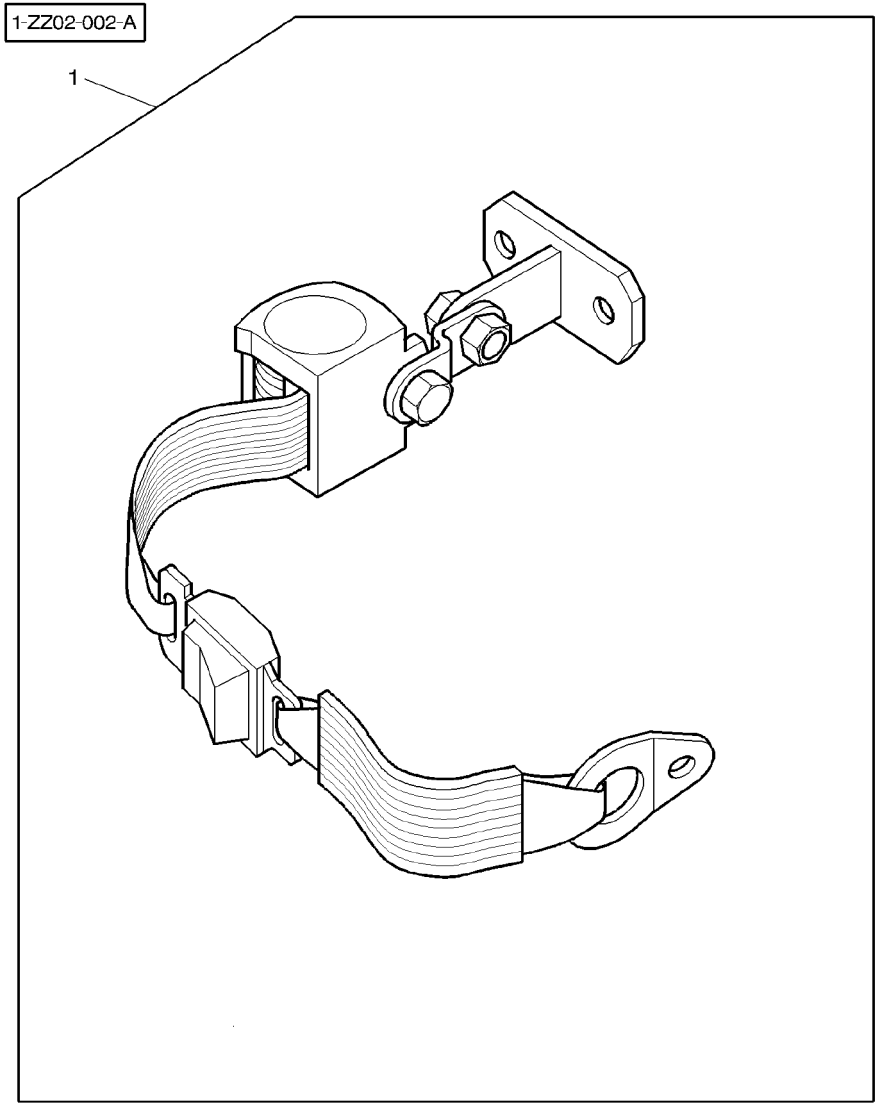

1	3781249M11	[A]	**1**	ACCESSORY CODE	CODE ACCESSOIRE CODICEACCESSORIO	ZUBEHOER-CODE CODIGO ACCESORIO

[A] FOR SERVICE BREAKDOWN REFER TO TRACTOR BOOK
POUR LES DETAILS VOIR CATALOGUE TRACTEUR
EINZENTEILE SIEHE SCHLEPPER LISTE
PER DETTAGLIO VEDERE CATALOGO TRATTORE
PARA LOS DETALLES REFERIRSE A LIBRO TRACTOR

Rotating Light
Gyrophare
Rundumkennleucht
Luce Rotativa
Luz Giratoria

150-80

1-ZW11-002-A

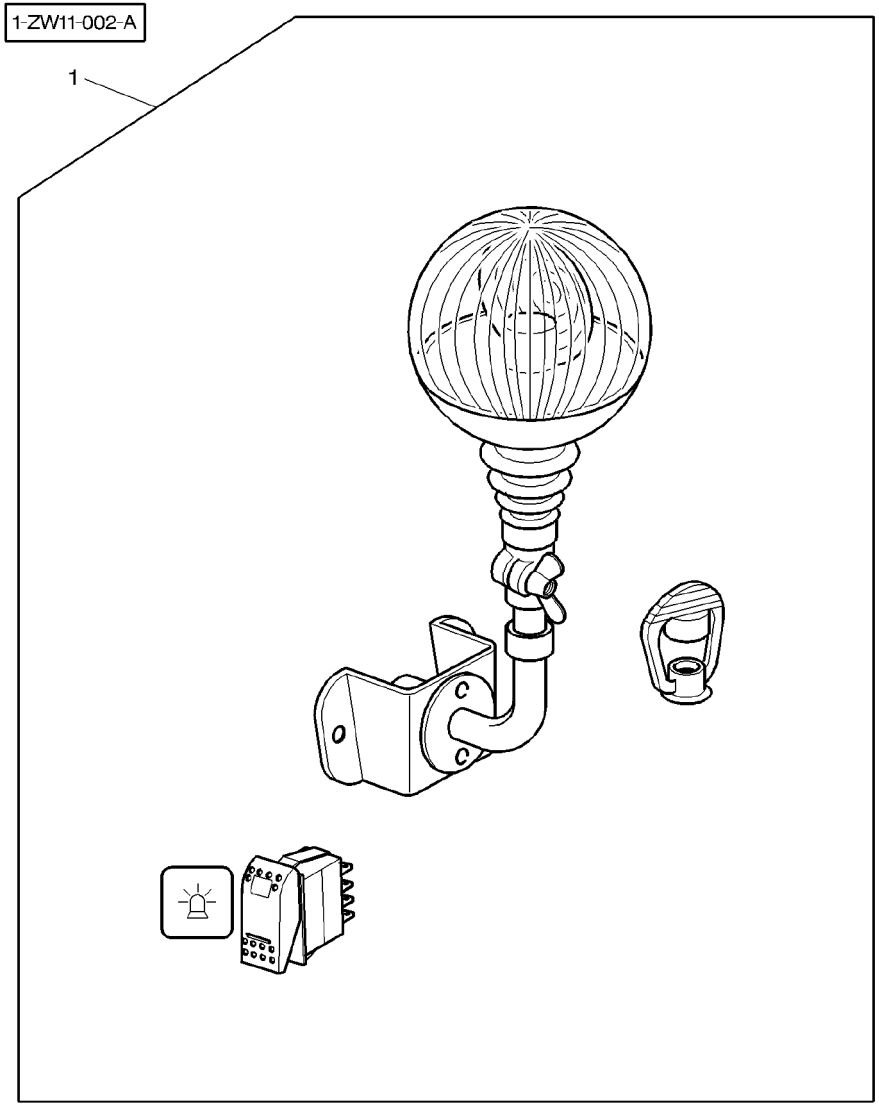

1	3777324M11	[A]	**1**	ACCESSORY CODE	CODE ACCESSOIRE CODICEACCESSORIO	ZUBEHOER-CODE CODIGO ACCESORIO

[A] FOR SERVICE BREAKDOWN REFER TO TRACTOR BOOK
POUR LES DETAILS VOIR CATALOGUE TRACTEUR
EINZENTEILE SIEHE SCHLEPPER LISTE
PER DETTAGLIO VEDERE CATALOGO TRATTORE
PARA LOS DETALLES REFERIRSE A LIBRO TRACTOR

Front Axle 4 Wheel Drive **Essieu Avant 4 Roues Motrices** **Vorderachse−4wd** **Assale Anteriore 4 Ruote Motrici** **Doble Traccion De Eje Frontal**	**Mudguards And Supports** **Garde Boue Et Supports** **Radabdeckung Mit Stutze** **Parafanghi E Supporto** **Guardabarros Y Soporte**	**150-85**

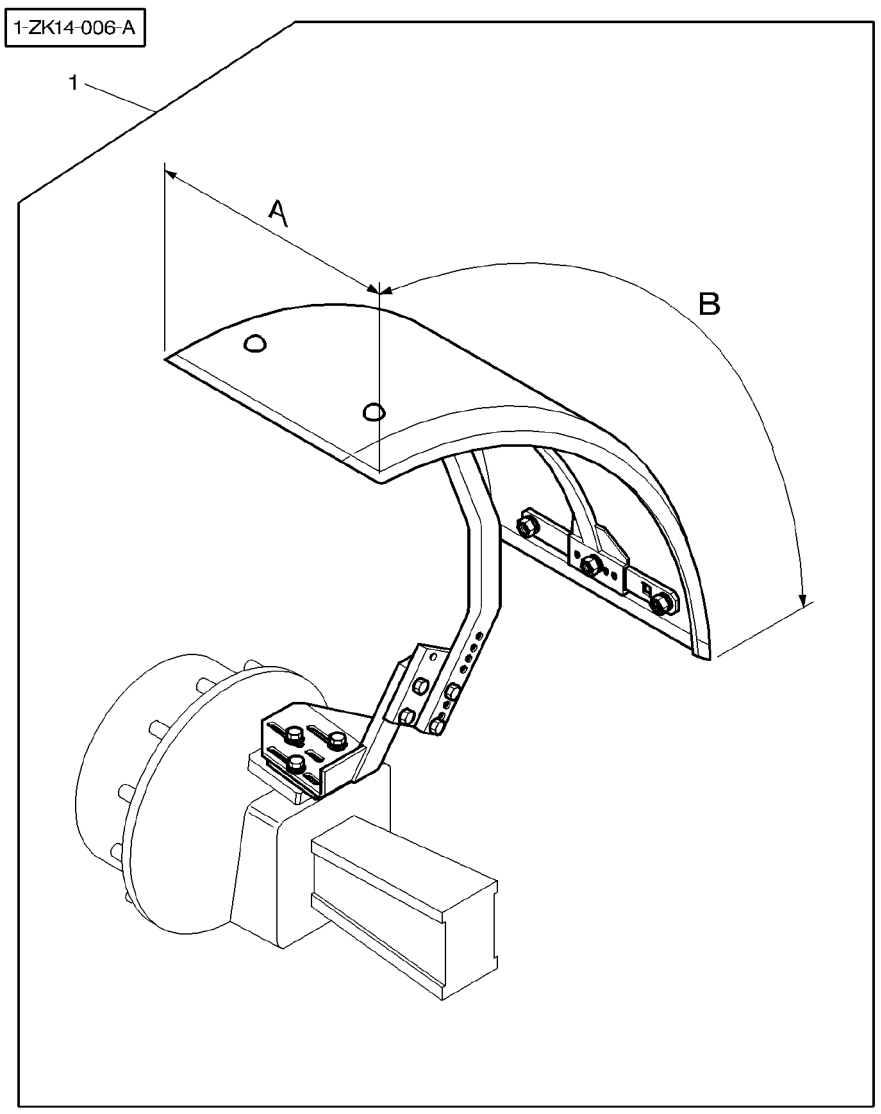

1	3783927M11	[A] A = 470MM B = 1300MM	**1** MUDGUARD	GARDE BOUE MUDGUARD	KOTBLECH MUDGUARD
1	3783928M11	[A] A = 520MM B = 1550MM	**1** MUDGUARD	GARDE BOUE MUDGUARD	KOTBLECH MUDGUARD
1	3783929M11	[A] A = 620MM B = 1560MM	**1** MUDGUARD	GARDE BOUE MUDGUARD	KOTBLECH MUDGUARD

[A] FOR SERVICE BREAKDOWN REFER TO TRACTOR BOOK
POUR LES DETAILS VOIR CATALOGUE TRACTEUR
EINZENTEILE SIEHE SCHLEPPER LISTE
PER DETTAGLIO VEDERE CATALOGO TRATTORE
PARA LOS DETALLES REFERIRSE A LIBRO TRACTOR

GROUP INDEX ALPHA
GROUPES DE MONTAGE
GRUPPENVERZEICHNIS
GRUPPO INDICE
GRUPOS DE MONTAJE

B 1

		PAGE
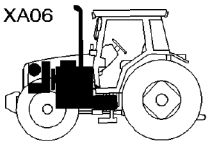 XA06	ENGINE AND EQUIPMENT MOTEUR ET EQUIPEMENT ENGINZUBEHOER MOTORE E EQUIPAGGIAMENTO MOTOR Y EQUIPAMENTE	10
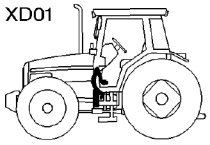 XD01	CLUTCH EMBRAYAGE KUPPLUNG FRIZIONE EMBRAGUE	20
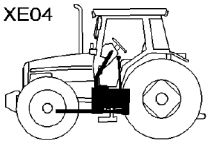 XE04	TRANSMISSION TRANSMISSION GETRIEBE TRASMISSIONE TRANSMISION	25
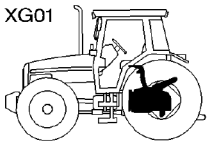 XG01	REAR AXLE ESSIEU ARRIERE HINTERACHSE ASSALE POSTERIORE EJE TRASERO	30
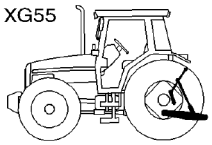 XG55	LINKAGE ATTELAGE LENKER TIRANTERIA ENGANCHES	40
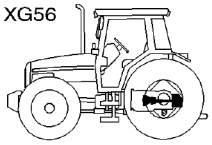 XG56	PTO−DRIVE MECHANISM TRANSMISSION PRISE DE FORCE ZAPFWELLENANTRIEB MECCANISMO PRESA DI FORZA MECANISMO ACCIONAMIENTO TOMA DE FUERZA	50
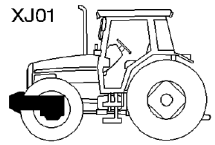 XJ01	FRONT AXLE ESSIEU AVANT VORDERACHSE ASSALE ANTERIORE EJE DELANTERO	60
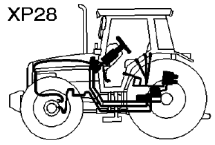 XP28	HYDRAULICS HYDRAULIQUE HYDRAULISCHE ANLAGE IDRAULICI HIDRAULICOS	70
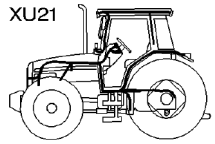 XU21	ELECTRIC EQUIPMENT & INSTRUMENT PANEL EQUIPEMENT ELECTRIQUE ET TABLEAU DE BORD ELEKTR.−ANLAGE UND INSTR.−BREH IMPIANTO ELETTRICO E CRUSCOTTO EQUIPO ELECTRICO Y TABLERO DE INSTRUMENTOS	80
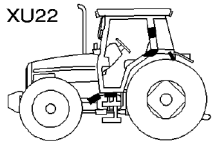 XU22	ELECTRONIC EQUIPMENT EQUIPEMENT ELECTRONIQUE ELEKTRONISCHAUSSTATTUNG EQUIPAGGIAMENTO ELETTRONICA EQUIPO ELECTRONICA	90
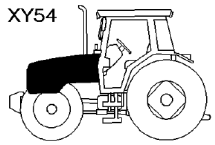 XY54	SHEET METAL CARROSSERIE VERKLEIDUNG CARROZZERIA EMPLANCHADOS	100
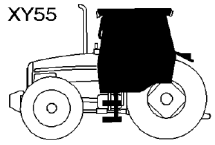 XY55	TRACTOR CAB CABINE TRACTEUR SCHLEPPERKABINE CABINA TRATTORE CABINA TRACTOR	110

GROUP INDEX ALPHA
GROUPES DE MONTAGE
GRUPPENVERZEICHNIS
GRUPPO INDICE
GRUPOS DE MONTAJE

B 2

PAGE

AS06

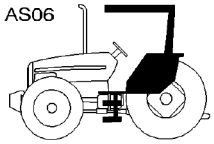

PLATFORM
PLATEFORME
PLATTFORM
PIATTAFORMA
PLATAFORMA

115

XY56

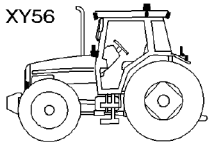

LIGHTING EQUIPMENT
ECLAIRAGE
BELEUCHTUNGSANLAGE
EQUIPAGGIAMENTO ILLUMINAZIONE
EQUIPO ALUMBRADO

120

XY57

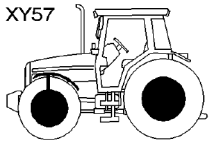

RIMS AND WHEELS WEIGHTS
JANTE ET MASSES DE ROUES
FELGE UND RADGEWICHTE
CERCHIONE Y CONTRAPPESI PER RUOTE
LLANTA E PESOS DE RUEDAS

130

XZ01

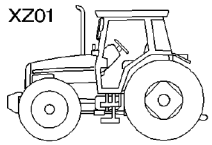

ACCESSORIES
ACCESSOIRES
ZUBEHOER
ACCESSORI
ACCESORIOS

150

PAGE

RESERVED

ALPHABETICAL INDEX

C1

PAGE

Accessories

Aboard Computer 150–45
Air Conditioner 150–60
Appliance Bracket Boarded For Cab 150–55
Auxiliary Distributor 150–40
Epicyclic Unit 150–5
Front Axle 4 Wheel Drive
Mudguards And Supports 150–85
Front Linkage 35000n 150–15
Rear Window Wiper 150–65
Rotating Light 150–80
Seat Belt 150–75
Secondary Seat 150–70
Trailor Brake 150–30

Clutch

Braking Assistance Accumulator 20–105
Clutch Control
Master Cylinder 20–100
Clutch Pedal And Linkage 20–85
Flywheel 20–5
Front Spacer 20–15
Front Spacer With Power Shuttle 20–40
Power Shuttle 20–30
Wet Clutch 20–20
Wet Clutch With Power Shuttle 20–25

Electric Equipment & Instrument Panel

Electric Equipment & Instrument Panel 80–30
Electrical Wiring 80–40
Engine Harness 80–35
Field Lights Harness 80–140
Full Powershift Control Harness
Armrest 80–80
Harness Console 80–100
Platform 80–100
Instrument Panel And Instruments 80–5
With Dynashift 80–5
With Full Powershift 80–25
Instrument Panel Harness 80–50

PAGE

Instrument Panel Harness/ Armrest 80–75
Lighting Harness
Roof 80–130
Lighting Harness Roof
Platform 80–160
Platform
Electrical Wiring 80–150
Roof Harness 80–125
Platform 80–125
Tractor Cab
Electrical Wiring 80–45

Electronic Equipment

Aboard Computer 90–55
Transfers 90–55
Wiring 90–60
Control Box
Cab 90–75
Platform 90–85
Control Box Harness / Console
Cab 90–125
Platform 90–130
Dynashift Harness
Cab 90–115
Platform 90–120
Electrical Wiring 90–5
Electronic Equipment
Sensors 90–40
Electronic Lift
Console 90–30
Main Harness 90–10
Electrovanes Harness / Etcu Harness−Instrument Panel
Cab 90–95
Platform 90–110
Full Powershift
Emergency Harness 90–150
Transmission Main Harness 90–145
Hydraulic Lift
Platform 90–35
Platform Electronic Lift

ALPHABETICAL INDEX

C2

PAGE

Main Harness 90–45
Radar 90–65
Sensors Harness
Cab 90–135
Platform 90–140
Temporised Relay Park−Lock
Full Powershift 90–155

Engine And Equipment

Air Filter
Dry − Dual Element 10–255
Air Induction And Exhaust System 10–90
Alternator
Magneti Marelli 10–30
Valeo 10–35
Alternator And Bracket 10–20
Battery And Cables 10–170
Cab Heating System
Engine Part 10–200
Closed Circuit Breather 10–70
Cooling System
Air Conditioned Installation 10–185
Engine 10–195
Crankshaft, Pistons And Connecting Rods 10–55
Cylinder Block 10–50
Cylinder Head 10–60
Engine And Equipment 10–5
Engine Gaskets Sets 10–160
Fan Drive Section 10–45
Fuel Injection Equipment (Diesel) 10–105
Fuel System
Fuel Filters And Pipes 10–225
Fuel Tank And Attachments 10–205
Hand Throttle Control
Platform 10–310
Heater Engine Block 10–165
Low Pressure Fuel System 10–140
Lubricating Oil Filler And Breather 10–65
Lubricating Oil Filter And Integral Cooler 10–125
Lubricating Oil Sump 10–120

PAGE

Rocker Shaft 10–75
Sanden Compresser 10–190
Sedimenter 10–245
Starter
Magneti Marelli 10–40
Throttle Controls 10–290
Timing Gear And Camshaft 10–100
Turbocharger 10–80
Pipes And Heat Shields 10–80
Vertical Exhaust On The Side 10–270
Water Pump, Thermostat And Heat Exchanger 10–130

Front Axle

Belly Weight 60–20
Chassis Structure 60–15
Front Axle 60–25
Front Axle 2 Wheel Drive
Cylinders 60–45
Front Axle 4 Wheel Drive 60–50
Clutch 60–50
Differential 60–85
Differential Lock Mechanism 60–60
Final Drive 60–90
Housing 60–80
Steering Cylinders 60–75
Guard And Transmission Shaft 60–65
Rear Axle
Intermediary Housing 60–55
Weight Frame And Tow Pin 60–5

Hydraulics

2 Distributors Control 70–415
3 Distributors Control 70–430
With Dual Control 70–430
4 Distributors Control 70–455
With Dual Control 70–455
Auxiliary Distributor 70–280
Auxiliary Hydraulics
Platform 70–465
Brakes

PAGE

Assisted− Pipes And Fitting 70–205
Brake Pipes And Master Cylinder 70–200
Hydraulic Pipes 70–250
Master Cylinder 70–185
Mechanical − Pipes And Fitting 70–235
Pedals 70–175
Dipstick / Centre Housing 70–410
Hydraulic Circuit Lube Systeme 70–140
With Full Powershift 70–140
Hydraulic Coupling 70–390
Hydraulic Lift Distributor 70–270
Hydraulic Valve 70–170
Hydraulics
Hydraulic Cover Rh 70–65
Lighting Dynashift Drive 70–20
Lighting Power Shuttle 70–25
Load Sensing
Auxiliry Distributors Installatio 70–285
Cover Lh−Pump / Filter 70–45
Cover Rh 70–50
Load Sensing With Power Shuttle
Cover Rh 70–85
Oil Cooler 70–155
Steering Hydraulic Lines 70–35
Steering Pump 70–30
Steering Wheel And Steady Column 70–5
Steering Wheel And Telescopic Column 70–10

Lighting Equipment

Field Lights 120–45
With High Visibility Roof 120–45
Lighting Equipment
Front 120–5
Rear 120–15
Rotating Light 120–65
Traffic Warning 120–30
Trailor Electric Socket 120–35
Working Light
Platform With Pillars 120–55

PAGE

Linkage

Autohitch
Dromone 40–175
Automatic Hitch
With Remote Control 40–170
Drawbar 40–165
Electronic Lift
Lift Arms 40–5
Front Linkage 35000n 40–195
Hitch 40–75
Levelling Box 40–15
Linkage
Lift Cylinders 40–10
Lower Cat 2 And 3 40–35
Shoe Stabilizers 40–160
Swinging Drawbar 40–105
Swinging Drawbar Support 40–50
Top Link With Ball End 40–20
Top Link With Hook End 40–25
Platform Automatic Hitch
With Remote Control 40–190
Top Link Lock 40–30
Tube Stabilizers 40–150

Platform

Decals
Platform 115–25
Platform
Cladding 115–15
Instrument Panel Cladding 115–10
Platform With Pillars
Mirrors 115–20
Roof 115–5

Pto−Drive Mechanism

Front Pto
Drive 50–85
Harness 50–120
Housing 50–75
Ipto Clutch 50–90

ALPHABETICAL INDEX

C4

	PAGE
Lines	50–110
Independant Power Take Off Clutch	50–20
Independant Power Take Off Drive Mechanism	
Two Speed	50–25
Pto Shaft	50–5
Pto−Coupling Drive Mechanism	50–50
Pto−Drive Mechanism	
Platform	50–60
Pto−Proportional Drive Mechanism	50–55

Rear Axle

Brakes	
Handbrake	30–25
Handbrake	
Lower Control	30–15
Parking Brake	
With Powershift	30–20
Rear Axle	
Centre Housing	30–30
Differential	30–50
Intermediary Housing	30–5
Rear Axle Differential Lock Mecchanism	
Multidiscs	30–65
Rear Axle Differential Lock Mechanism	
Hydromechanical	30–60
Short Rear Axle Housings	
Outer Final Drive Gear	30–35

Rims And Wheels Weights

Front Axle 4 Wheel Drive	
Mudguards And Supports	130–30
Front Wheels	
2 Wheel Drive	130–5
4 Wheel Drive	130–10
Rear Wheels	130–70
Fixing By Cone	130–70
Wheel Wedges	130–85
Wheel Weights	130–80

Sheet Metal

	PAGE
Cab Mountings And Step / Stairs	100–30
Decals	
Safety	100–80
Emblems	100–65
Footstep And Battery Box	100–45
Literature	100–140
Mountings And Step / Stairs	
Platform	100–55
Sheet Metal	
Hood	100–5
Hood Frame	100–25
Hood Handle	100–10
Screen Frame	100–15
Speed Charts	100–70
Tool Box	100–60

Tractor Cab

Air Conditioner	110–115
Hose	110–115
Air Hatchway	110–40
Doors	110–10
Electrical Plug And Cigar Lighter	110–225
Front Windscreen Wiper	110–190
Heating Hatchway	110–35
High Visibility Roof	110–60
Cladding	110–60
Window	110–50
Instrument Panel Cladding	110–90
Main Seat	
Platform	110–280
Radio Installation	110–210
Rear Window Mechanism	110–25
Rear Window Wiper	110–195
Roof	110–30
Seat	
Grammer	110–250
Seat Belt	110–290
Secondary Seat	110–295
Side Window Mechanism	110–20
Tractor Cab	110–95

	PAGE
Cab Insulation	110–95
Canopy	110–200
Cladding	110–55
External Mirrors	110–235
Fenders	110–105
Heater	110–135
Heater Hoses	110–125
Internal Mirrors	110–245
Watch	110–220
Windows	110–15
Windscreen Washer	110–185

Transmission

Control Armrest	25–130
Controle Full Powershift	25–145
Creeper Gearbox Control	25–105
Dynashift	25–10
Dynashift Transmission	25–40
Countershaft	25–40
Housing	25–5
Input Gears	25–30
Input Shaft With Synchromesh	25–35
Main Shaft	25–45
Output Shaft	25–60
Dynashift With Power Shuttle	25–20
Epicyclic Unit	25–85
Full Powershift	
Electrovalves	25–215
Gear Box Full Power Shift	25–185
2 Nd Gears	25–185
3 Rd Gears	25–190
4 Th Gears	25–195
5 Th Gears	25–200
6 Th Gears	25–205
7 Th Gears	25–210
Input Shaft	25–180
Pump	25–175
Heavy Duty Transmission Power Shuttle	
Main Shaft	25–50
Manual Shuttle Shift Levers	
Left Hand Controls	25–115
Shift Lever	25–125
Platform	25–125
Synchro Heavy Duty Transmission	25–55
Transmission	
Output Shaft	25–95

INDEX ALPHABETIQUE

C6

PAGE

Accessoires

- Air Conditionne **150 – 60**
- Attelage Avant 35000n **150 – 15**
- Ceinture De Securite **150 – 75**
- Distributeur Auxiliaire **150 – 40**
- Essieu Avant 4 Roues Motrices
  - Garde Boue Et Supports **150 – 85**
- Essuie Glace Arriere **150 – 65**
- Freinage De Remorque **150 – 30**
- Gyrophare **150 – 80**
- Ordinateur De Bord **150 – 45**
- Reducteur Epicycloidal **150 – 5**
- Siege Secondaire **150 – 70**
- Support Appareil Embarque Pour Cabine **150 – 55**

Attelage

- Attelage
  - Barre De 3eme Point A Crochet **40 – 25**
  - Barre De 3eme Point A Rotule **40 – 20**
  - Barre Oscillante **40 – 105**
  - Inferieur Cat 2 Et 3 **40 – 35**
  - Stabilisateurs A Sabots **40 – 160**
  - Support De Barre Oscillante **40 – 50**
  - Verins De Relevage **40 – 10**
- Attelage Automatique
  - Dromone **40 – 175**
- Attelage Avant 35000n **40 – 195**
- Barre A Trous **40 – 165**
- Boitier De Nivellement **40 – 15**
- Crochet Automatique
  - Avec Commande A Distance **40 – 170**
- Crochet Automatique Plateforme
  - Avec Commande A Distance **40 – 190**
- Crochet D'Attelage **40 – 75**
- Relevage Electronique
  - Bras De Relevage **40 – 5**
- Stabilisateurs A Tube **40 – 150**
- Verrouillage Barre De 3eme Point **40 – 30**

Cabine Tracteur

PAGE

- Air Conditionne **110 – 115**
  - Durite **110 – 115**
- Cabine Tracteur **110 – 105**
  - Ailes **110 – 105**
  - Chauffage **110 – 135**
  - Chauffage Durite **110 – 125**
  - Habillage **110 – 55**
  - Insonorisation **110 – 95**
  - Pare Soleil **110 – 200**
  - Retroviseurs Exterieurs **110 – 235**
  - Retroviseurs Interieurs **110 – 245**
- Ceinture De Securite **110 – 290**
- Essuie Glace Arriere **110 – 195**
- Essuie Glace Avant **110 – 190**
- Habillage Tableau De Bord **110 – 90**
- Lave Glace **110 – 185**
- Mecanisme De Glace Arriere **110 – 25**
- Mecanisme De Glace Laterale **110 – 20**
- Montage Radio **110 – 210**
- Montre **110 – 220**
- Portes **110 – 10**
- Prise De Courant Et Allume Cigare **110 – 225**
- Siege
  - Grammer **110 – 250**
- Siege Principal
  - Plateforme **110 – 280**
- Siege Secondaire **110 – 295**
- Toit **110 – 30**
- Toit Haute Visibilite **110 – 50**
  - Glace **110 – 50**
  - Habillage **110 – 60**
- Trappe D'Aeration **110 – 40**
- Trappe De Chauffage **110 – 35**
- Vitres **110 – 15**

Carrosserie

- Boite A Outils **100 – 60**
- Carrosserie
  - Armature Calandre **100 – 15**
  - Armature Capot **100 – 25**

INDEX ALPHABETIQUE

C7

	PAGE
Capot	100–5
Poignee Capot	100–10
Decalcomanies	
Securite	100–80
Emblemes	100–65
Fixation Cabine Et Marchepied	100–30
Fixation Et Marchepied	
Plateforme	100–55
Litterature	100–140
Marchepieds Et Logement De Batterie	100–45
Tableaux Des Vitesses	100–70
Eclairage	
Eclairage	
Arriere	120–15
Avant	120–5
Equipement Signalisation	120–30
Gyrophare	120–65
Phare De Travail	120–45
Avec Toit Haute Visibilite	120–45
Plateforme Avec Piliers	120–55
Prise Electrique De Remorque	120–35
Embrayage	
Accumulateur D' Assistance De Freinage	20–105
Carter Entretoise Avant	20–15
Carter Entretoise Avant Avec Inverseur Sous Couple	20–40
Commande D Embrayage	
Maitre Cylindre	20–100
Commande D'Embrayage	20–85
Embrayage A Bain D'Huile	20–20
Embrayage A Bain D'Huile Avec Inverseur Sous Couple	20–25
Inverseur Sous Couple	20–30
Volant Moteur	20–5
Equipement Electrique Et Tableau De Bord	
Cabine Tracteur	
Cablage Electrique	80–45
Cablage Electrique	80–40
Equipement Electrique Et Tableau De Bord	80–30
Faisceau Console	80–100
Plateforme	80–100
Faisceau De Commande Full Powershift	
Accoudoir	80–80
Faisceau De Phares De Travail	80–140
Faisceau De Tableau De Bord	80–50
Faisceau Eclairage	
Toit	80–130
Faisceau Eclairage De Toit	
Plateforme	80–160
Faisceau Moteur	80–35
Faisceau Plafond	80–125
Plateforme	80–125
Faisceau Tableau De Bord / Accoudoir	80–75
Plateform	
Cablage Electrique	80–150
Tableau De Bord Et Instruments	80–5
Avec Dynashift	80–5
Avec Full Powershift	80–25
Equipement Electronique	
Boite De Controle	
Cabine	90–75
Plateforme	90–85
Cablage Electrique	90–5
Equipement Electronique	
Capteurs	90–40
Faisceau Boite De Controle / Console	
Cabine	90–125
Plateforme	90–130
Faisceau Capteurs	
Cabine	90–135
Plateforme	90–140
Faisceau Dynashift	
Cabine	90–115
Plateforme	90–120
Faisceau Electrovannes / Faisceau Etcu−Tableau De Bord	
Cabine	90–95
Plateforme	90–110
Full Powershift	

INDEX ALPHABETIQUE

C8

	PAGE
Faisceau De Secours	**90 – 150**
Faisceau Transmis. Principal	**90 – 145**
Ordinateur De Bord	**90 – 60**
Cablage	**90 – 60**
Decalcomanies	**90 – 55**
Radar	**90 – 65**
Relais Temporise Park−Lock	
Full Powershift	**90 – 155**
Relevage Electronique	
Console	**90 – 30**
Faisceau Principal	**90 – 10**
Relevage Electronique Plateforme	
Faisceau Principal	**90 – 45**
Relevage Hydraulique	
Plateforme	**90 – 35**

Essieu Arriere

Blocage De Differentiel D Essieu Arriere	
Hydromecanique	**30 – 60**
Blocage De Differentiel D'Essieu Arriere	
Multidisques	**30 – 65**
Essieu Arriere	
Carter Central	**30 – 30**
Carter Intermediaire	**30 – 5**
Differentiel	**30 – 50**
Frein A Main	
Commandes Inferieures	**30 – 15**
Frein De Parking	
Avec Powershift	**30 – 20**
Freins	
Frein A Main	**30 – 25**
Trompettes Courtes D Essieu Arriere	
Couronne Reduct.Finale Exterieure	**30 – 35**

Essieu Avant

Essieu Arriere	
Carter Intermediaire	**60 – 55**
Essieu Avant	**60 – 25**
Essieu Avant 2 Roues Motrices	
Verins	**60 – 45**

	PAGE
Essieu Avant 4 Roues Motrices	**60 – 60**
Blocage De Differentiel	**60 – 60**
Carter	**60 – 80**
Differentiel	**60 – 85**
Embrayage	**60 – 50**
Reduction Finale	**60 – 90**
Verins De Direction	**60 – 75**
Garant Et Arbre De Transmission	**60 – 65**
Masse Ventrale	**60 – 20**
Structure De Chassis	**60 – 15**
Support De Masses Et Broche	**60 – 5**

Hydraulique

Circuit Hydraulique Lubrification	**70 – 140**
Avec Full Powershift	**70 – 140**
Commande Avec 2 Distributeurs	**70 – 415**
Commande Avec 3 Distributeurs	**70 – 430**
Avec Dual Control	**70 – 430**
Commande Avec 4 Distributeurs	**70 – 455**
Avec Dual Control	**70 – 455**
Commande Eclairage Dynashift	**70 – 20**
Commande Eclairage Et Inverseur	**70 – 25**
Coupleur Hydraulique	**70 – 390**
Distributeur Auxiliaire	**70 – 280**
Distributeur De Relevage	**70 – 270**
Freins	
Assiste − Tuyauteries Et Montage	**70 – 205**
Maitre Cylindre	**70 – 185**
Mecanique − Tuyauteries Montage	**70 – 235**
Pedale	**70 – 175**
Tubes De Frein Et Maitre Cylindre	**70 – 200**
Tuyauterie Hydraulique	**70 – 250**
Hydraulique	
Couvercle Droit	**70 – 65**
Hydraulique Auxiliaire	
Plateforme	**70 – 465**
Jauge / Carter Central	**70 – 410**
Load Sensing	
Couvercle Droit	**70 – 50**
Couvercle Gauche − Pompe / Filtre	**70 – 45**

INDEX ALPHABETIQUE

C9

	PAGE
Montage Distributeurs Auxiliaires	70–285
Load Sensing Avec Inverseur Sous Couple	
Couvercle Droit	70–85
Pompe De Direction	70–30
Refroidisseur D'Huile	70–155
Tuyauteries Hydrauliques De Direction	70–35
Valve Hydraulique	70–170
Volant De Direction Et Colonne Fixe	70–5
Volant De Direction Et Colonne Telescopique	70–10
Jante Et Masses De Roues	
Cales De Roues	130–85
Essieu Avant 4 Roues Motrices	
Garde Boue Et Supports	130–30
Masses De Roue	130–80
Roues Arriere	130–70
Fixation Par Cone	130–70
Roues Avant	
2 Roues Motrices	130–5
4 Roues Motrices	130–10
Moteur Et Equipement	
Admission D'Air Et Echappement	10–90
Alternateur	
Magneti Marelli	10–30
Valeo	10–35
Alternateur Et Support	10–20
Axe Des Culbuteurs	10–75
Batterie Et Cables	10–170
Bloc−Cylindres	10–50
Carter D' Huile	10–120
Chauffage Cabine	
Partie Moteur	10–200
Circuit Carburant Basse Pression	10–140
Commande D'Acceleration	10–290
Commande D'Acceleration A Main	
Plateforme	10–310
Commande De Ventilateur	10–45
Compresseur Sanden	10–190
Culasse	10–60
Demarreur	
Magneti Marelli	10–40
Distribution Et Arbre A Cames	10–100
Echappement Vertical Lateral	10–270
Equipement D'Injection (Diesel)	10–105
Filtre A Air	
Sec Deux Elements	10–255
Filtre A Huile Et Refroidisseur D'Huile	10–125
Jeux De Joints Moteur	10–160
Moteur Et Equipement	10–5
Pompe A Eau Et Thermostat	10–130
Rechauffeur Bloc Moteur	10–165
Recuperateur D'Huile Avec Retour Au Carter	10–70
Remplisseur D'Huile Et Reniflard	10–65
Sedimenteur	10–245
Systeme D Alimentation Carburant	
Reservoir A Carburant Et Fixation	10–205
Systeme D'Alimentation Carburant	
Filtre A Carburant Et Tuyauteries	10–225
Systeme De Refroidissement	
Installation Air Conditionne	10–185
Moteur	10–195
Turbocompresseur	10–80
Canalisations−Garants Thermiques	10–80
Vilebrequin Pistons Et Bielles	10–55
Plateforme	
Decalcomanies	
Plateforme	115–25
Plateforme	
Habillage	115–15
Habillage Tableau De Bord	115–10
Plateforme Avec Piliers	
Retroviseurs	115–20
Toit	115–5
Transmission	
Accoudoir De Commande	25–130
Boite De Vitesses	
Arbre De Sortie	25–95

INDEX ALPHABETIQUE

C10

	PAGE
Boite De Vitesses Dynashift	**25–35**
Arbre D'Entree Avec Synchro.	**25–35**
Arbre De Renvoi	**25–40**
Arbre De Sortie	**25–60**
Arbre Principal	**25–45**
Carter	**25–5**
Pignons D'Entree	**25–30**
Boite De Vitesses Full Power Shift	**25–180**
Arbre D'Entree	**25–180**
Pignons 2 Eme	**25–185**
Pignons 3 Eme	**25–190**
Pignons 4 Eme	**25–195**
Pignons 5 Eme	**25–200**
Pignons 6 Eme	**25–205**
Pignons 7 Eme	**25–210**
Pompe	**25–175**
Boite De Vitesses Renforcee Inverseur Sous Couple	
Arbre Principal	**25–50**
Commande De Vitesse Rampante	**25–105**
Commande Full Powershift	**25–145**
Dynashift	**25–10**
Dynashift Avec Inverseur Sous Couple	**25–20**
Full Powershift	
Electrovannes	**25–215**
Levier D'Inverseur Manuel	
Commande A Gauche	**25–115**
Leviers De Vitesse	**25–120**
Leviers De Vitesses	
Plateforme	**25–125**
Reducteur Epicycloidal	**25–85**
Synchro Boite De Vitesses Renforcee	**25–55**

Transmission Prise De Force

	PAGE
Arbre De Prise De Force	**50–5**
Embrayage De Prise De Force Independante	**50–20**
Prise De Force Avant	
Carter	**50–75**
Embrayage Ipto	**50–90**
Faisceau	**50–120**
Transmission	**50–85**
Tuyauteries	**50–110**
Transmission Prise De Force	
Plateforme	**50–60**
Transmission Prise De Force Crabotable	**50–50**
Transmission Prise De Force Independante	
Deux Vitesses	**50–25**
Transmission Prise De Force Proportionnelle	**50–55**

ALPHABETISCHER INDEX

C11

PAGE

Beleuchtungsanlage

Arbeitsscheinwerfer **120–45**
Mit Dach Mit Sonnendach **120–45**
Plattform Mit Pfosten **120–55**
Beleuchtungsanlage
Hinterteil **120–15**
Vorderseite **120–5**
Rundumkennleucht **120–65**
Steckeranhaenger **120–35**
Warausrustung **120–30**

Elektr.−Anlage Und Instr.−Breh

Armaturenbrett Und Armaturen **80–5**
Mit Dynashift **80–5**
Mit Full Powershift **80–25**
Elektr.−Anlage Und Instr.−Breh **80–30**
Instrumentenbrettkabelnezt / Armlehne **80–75**
Kabelausruestung **80–40**
Kabelnezt Antrieb Full Powershift
Armlehnen **80–80**
Kabelnezt Arbeitsscheinwerfer **80–140**
Kabelnezt Beleuchtung
Dach **80–130**
Kabelnezt Beleuchtung Dach
Plattform **80–160**
Kabelnezt Dach **80–125**
Plattform **80–125**
Kabelnezt Instrumentenbrett **80–50**
Kabelnezt Konsole **80–100**
Plattform **80–100**
Kabelnezt Motor **80–35**
Plattform
Elektr.−Verkabelung **80–150**
Schlepperkabine
Kabelausruestung **80–45**

Elektronischausstattung

Abwartend Verteiler Feststellbremse
Full Powershift **90–155**
Bord−Computer

PAGE

Abziehbilder **90–55**
Bord.Computer **90–50**
Bordcomputer
Kabelanlage **90–60**
Electron Aushebg
Hauplkabelbaum **90–10**
Electron Aushebg Plattform
Hauplkabelbaum **90–45**
Elektrmagn. Kabel / Etcu Kabel−Armaturenbrett
Kabine **90–95**
Plattform **90–110**
Elektron Ausrstg
Sensoren **90–40**
Elektron−Aushbg
Konsole **90–30**
Full Powershift
Hilfekabelnetz **90–150**
Kraftubertragung Hauptkabelbaum **90–145**
Hydraulik Hub
Plattform **90–35**
Kabelausruestung **90–5**
Kabelbaum Dynashift
Plattform **90–120**
Kabeldynashift
Kabine **90–115**
Kabelsteuergeraet / Konsole
Kabine **90–125**
Plattform **90–130**
Radar **90–65**
Sensoren−Kabel
Kabine **90–135**
Plattform **90–140**
Steuergeraet
Kabine **90–75**
Plattform **90–85**

Enginzubehoer

Abschnitt Luefterantrieb **10–45**
Anlasser
Magneti Marelli **10–40**

ALPHABETISCHER INDEX

C12

	PAGE
Aussenliegend	**10–245**
Battery And Kabel	**10–170**
Deleinfuellstutzen Und Entlueftung	**10–65**
Drehstromlichtmaschine	
Magneti Marelli	**10–30**
Valeo	**10–35**
Drehstromlichtmaschine Und Support	**10–20**
Einspritzanlage (Diesel)	**10–105**
Enginzubehoer	**10–5**
Handgas	
Plattform	**10–310**
Heizung Motor	**10–165**
Kabinen−Heizungssystem	
Motor Teile	**10–200**
Kipphebelanlage	**10–75**
Kraftstoff−Niederdruckanlage	**10–140**
Kraftstoffanlage	
Kraftstoffbehaelter Und Befestig.	**10–205**
Kraftstoffilter Und Leitungen	**10–225**
Kraftstoffregelung	**10–290**
Kuehlsystem	
Klimaanlage−Einbau	**10–185**
Kuehlung	
Motor	**10–195**
Kurbelwelle, Kolben Und Pleuel	**10–55**
Luftansaugung Und Auspuff	**10–90**
Luftfilter	
Doppelter Trockenfiltereinsatz	**10–255**
Motor − Dichtungssaetze	**10–160**
Olruckgewinnung	**10–70**
Sanden−Kompressor	**10–190**
Schmieroelfilter Und Motorseitiger Delhuehler	**10–125**
Schmieroelwanne	**10–120**
Senkrechtem Seitenauspuff	**10–270**
Steuergetriebe Und Nockenwelle	**10–100**
Turbolader	**10–80**
Rohre Und Hitzschild	**10–80**
Wasserpumpe, Thermostat Und Waermetauscher	**10–130**
Zylinderblock	**10–50**
Zylinderkopef	**10–60**

	PAGE
Felge Und Radgewichte	
Hinterraeder	**130–70**
Anbau Der Konus	**130–70**
Radgewichte	**130–80**
Unterlegkeile	**130–85**
Vorderachse−4wd	
Radabdeckung Mit Stutze	**130–30**
Vorderraeder	
Allradantrieb	**130–10**
Hinterradantrieb	**130–5**
Getriebe	
Dynashift	**25–10**
Dynashift Getriebe	**25–30**
Antriebsrad	**25–30**
Antriebswelle Mit Synchronisation	**25–35**
Ausgangswelle	**25–60**
Gehaeuse	**25–5**
Hauptwelle	**25–45**
Vorgelegewelle	**25–40**
Dynashift Mit Unter Drehmoment	**25–20**
Full Powershift	
Electron.Ventil	**25–215**
Getriebe	
Ausgangswelle	**25–95**
Getriebe Full Power Shift	**25–185**
2 Zahnrad	**25–185**
3 Zahnrad	**25–190**
4 Zahnrad	**25–195**
5 Zahnrad	**25–200**
6 Zahnrad	**25–205**
7 Zahnrad	**25–210**
Antriebswelle	**25–180**
Pumpe	**25–175**
Kriechganggetriebe−Schaltung	**25–105**
Powershift Full Bedienung	**25–145**
Schalthebel	**25–125**
Plattform	**25–125**
Schalthebel Handschaltung	
Links Antrieb	**25–115**

ALPHABETISCHER INDEX

C13

	PAGE
Schaltung Armlehne	25–130
Synchronisiereinrichtung Verstaerkt Getriebe	25–55
Untersetzungsgetriebe	25–85
Verstaerkt Getriebe Schaltgetriebe Unter Drehmoment	
Hauptwelle	25–50

Hinterachse

Bremsen	
Handbremse	30–25
Diff.Sperre Hinterachsgehaeuse Mechanisch	
Hydro−Mechanisch	30–60
Meherschribe	30–65
Feststellbremse	
Mit Powershift	30–20
Handbremse	
Innere Betaetigung	30–15
Hinterachse	
Differential	30–50
Zentralgehaeuse	30–30
Hinterachsgehaeuse,Kurz	
Endantrieb Aussen	30–35
Hinterasche	
Zusatzgehaeuse	30–5

Hydraulische Anlage

Antrieb Mit 2 Verteilers	70–415
Antrieb Mit 3 Verteilers	70–430
Mit Dual Control	70–430
Antrieb Mit 4 Verteilers	70–455
Mit Dual Control	70–455
Beleuchtung Und Schaltung Bedinung	70–25
Beleuchtung Dynashift Schaltung	70–20
Bremsen	
Hauptbremszylinder	70–185
Hydraulik Leitungen	70–250
Hydraulikleitung−Hauptbremszylind	70–200
Mecanish − Leitungen Anschluesse	70–235
Pedals	70–175
Servo − Leitungen Und Anschluesse	70–205
Hubverteiler	70–270
Hydr. − Kupplung	70–390
Hydraulikleitungen Lenkung	70–35
Hydraulikleitungen Schmierungs	70–140
Mit Full Powershift	70–140
Hydraulikventil	70–170
Hydraulische Anlage	
Rechtsdeckel	70–65
Lenkhilfepumpe	70–30
Lenkrad Und Saeulefest	70–5
Lenkrad Und Saeuleteleskopisch	70–10
Load Sensing	
Linksdeckel − Pumpe / Filter	70–45
Rechtsdeckel	70–50
Zuzatzeinbausverteilers	70–285
Load Sensing Mit Unter Drehmoment	
Rechtsdeckel	70–85
Messtab / Zentralgehaeuse	70–410
Oelkuehler	70–155
Zusatzhydraulik	
Plattform	70–465
Zuzatzverteiler	70–280

Kupplung

Akkumulator Hilfe Bremsung	20–105
Kupplungsbetaetigung	
Hauptbremszylinder	20–100
Kupplungspedal Und Gestae	20–85
Oelbad Scheibenkupplung	20–20
Oelbad Scheibenkupplung Mit Unter Drehmoment	20–25
Schwungrad	20–5
Unter Drehmoment	20–30
Vorderer Spacer	20–15
Vorderer Spacer Mit Unter Drehmoment	20–40

Lenker

Ackerschiene	40–165
Anhaengekupplung	40–75
Automatische Anhaengekupplung	
Mit Fernbedienung	40–170
Elektronische Aushebung	

PAGE

Hubarme 40–5
Lenker
Druckzylinder 40–10
Hohenflosseschuh 40–160
Oberlenker Mit Haken 40–25
Oberlenker Mit Kugelgelenk 40–20
Unten Cat 2 Und 3 40–35
Zugpendel 40–105
Zugstangestuetze 40–50
Oberlenkerriegel 40–30
Plattform Automatische Anhaengekupplung
Mit Fernbedienung 40–190
Selbsttaetige Kupplung
Dromone 40–175
Stabilisatoren 40–150
Verstellgehaeuse 40–15
Vordere Kupplung 35000n 40–195

Plattform

Aufkleber
Plattform 115–25
Plattform
Einfassung 115–15
Einfassung Fuer Instr.−Brett 115–10
Plattform Mit Pfosten
Dach 115–5
Ruckspiegel 115–20

Schlepperkabine

Beifahrersitz 110–295
Belueftungsduese 110–40
Dach 110–30
Dach Mit Sonnendach 110–60
Dressieren 110–60
Fenster 110–50
Einfassung Fuer Instr.−Brett 110–90
Elektr. Stecker Und Zigarrenanzuender 110–225
Fahrersitz
Grammer 110–250
Plattform 110–280

PAGE

Heckfenster Ausstellvor 110–25
Heizungsduese 110–35
Hinterscheibenwischer 110–195
Klimaanlage 110–115
Schlauch 110–115
Rundfunk Anbau 110–210
Scheiben 110–15
Scheibenwascher 110–185
Scheibenwischer Vorderteil 110–190
Schlepper−Cabine
Verkleidung 110–55
Schlepperkabine 110–235
Asserruckspiegel 110–235
Heizung 110–135
Heizung Schlauch 110–125
Innerruckspiegel 110–245
Isolierung 110–95
Kotfluegel 110–105
Vordach 110–200
Seitenfenster Ausstellvor 110–20
Sicherheitsgurt 110–290
Taschenuhr 110–220
Tuer 110–10

Verkleidung

Abziehbilder
Sicherheit 100–80
Befestigung Und Aufstieg 100–55
Plattform 100–55
Firmenzeichen 100–65
Ganggeschwindigk 100–70
Literatur 100–140
Trittberetter Und Batterie Lenkgehause 100–45
Verkleidung
Gittersieb Armatur 100–15
Handmotorhaube 100–10
Motorhaube 100–5
Motorhaube Armatur 100–25
Werkzeugkasten 100–60

ALPHABETISCHER INDEX

C15

PAGE

Vorderachse

Allradantrieb Vorderachse
- Kupplung **60–50**

Gewichtrahmen Und Kupplungsbolzen **60–5**
Grundgewicht **60–20**
Hinterasche
- Zusatzgehaeuse **60–55**

Schutz Und Allradantriebswelle **60–65**
Struktur Fahrgestell **60–15**
Vordachsantr. 4wd
- Lenkzylinder **60–75**

Vorderachse **60–25**
Vorderachse 2−Radantrieb
- Zylinder **60–45**

Vorderachse Allradantrieb **60–85**
- Differential **60–85**
- Endantrieb **60–90**
- Gehaeuse **60–80**

Vorderachse−4wd
- Diff −Sperre **60–60**

Zapfwellenantrieb

Feineinstellung Zapfw.−Antrieb **50–55**
Frontzapfwelle
- Antrieb **50–85**
- Gehaeuse **50–75**
- Ipto Kupplung **50–90**
- Kabelbaum **50–120**
- Leitungen **50–110**

Ipto Kupplung **50–20**
Ipto Mechanischer Antrieb
- 2 Gang **50–25**

Zapfwelle **50–5**
Zapfwellenantrieb
- Plattform **50–60**

Zapfwellenkupplung−Antrieb **50–50**

Zubehoer

Anhaenger−Breme **150–30**
Beifahrersitz **150–70**

PAGE

Bord.Computer **150–45**
Gerathaltearm Gegehen Fur Kabine **150–55**
Hinterscheibenwischer **150–65**
Klimaanlage **150–60**
Rundumkennleucht **150–80**
Sicherheitsgurt **150–75**
Untersetzungsgetriebe **150–5**
Vorderachse−4wd
- Radabdeckung Mit Stutze **150–85**

Vordere Kupplung 35000n **150–15**
Zuzatzverteiler **150–40**

INDICE ALFABETICO

C16

PAGE

Accessori

A Pannello Computer **150–45**
Aria Condizionata **150–60**
Assale Anteriore 4 Ruote Motrici
Parafanghi E Supporto **150–85**
Attacco Anteriore 35000n **150–15**
Cintura Sicurezza **150–75**
Distributore Auxiliarie **150–40**
Freno Rimorchio **150–30**
Gruppo Epicicloidale **150–5**
Luce Rotativa **150–80**
Sedile Secondario **150–70**
Supporto Fissagg Imbacare Per Cabina **150–55**
Tergicristallo Parte Posteriore **150–65**

Assale Anteriore

Assale Anteriore **60–50**
Frizione **60–50**
Assale Anteriore 2 Ruote Motrici
Cilindri **60–45**
Assale Anteriore 4 Ruote Motrici **60–80**
Carcassa **60–80**
Cilindri Di Sterzo **60–75**
Comando Bloccaggio Differenziale **60–60**
Differenziale **60–85**
Riduzione Finale **60–90**
Assale Posteriore
Carcassa Intermadia **60–55**
Riparo E Albero Trasmissione **60–65**
Strutturatelaio **60–15**
Telaio Pesante E Perno Di Rimorchio **60–5**
Zavorra Ventrale **60–20**

Assale Posteriore

Assale Posteriore
Carcassa Intermadia **30–5**
Centrale Carcassa **30–30**
Differenziale **30–50**
Bloccaggio Differenziale Posteriore
Idromeccanico **30–60**

PAGE

Bloccaggio Differenziall Posteriore
Molteplice Discos **30–65**
Freni
Freno A Mano **30–25**
Freno A Mano
Comando Inferiore **30–15**
Freno Di Parcheggio
Con Powershift **30–20**
Scatole Riduttori Strette
Corana Esterna **30–35**

Cabina Trattore

Aria Condizionata **110–115**
Tubo **110–115**
Bocchetta Aria **110–40**
Bocchetta Riscaldamento **110–35**
Cabina
Leggera **110–55**
Cabina Trattore **110–95**
Isolante Cabina **110–95**
Parafango **110–105**
Retrovisore **110–235**
Retrovisore Interior **110–245**
Riscaldatore **110–135**
Riscaldatore Tubo Flessibile **110–125**
Tettuccio **110–200**
Cintura Sicurezza **110–290**
Comando Finestra Laterale **110–20**
Comando Portello Posteriore **110–25**
Cruscotto Cabina **110–90**
Finestrni **110–15**
Lavacristallo **110–185**
Orologio **110–220**
Porta **110–10**
Radio Installazione **110–210**
Sedile
Grammer **110–250**
Piattaforma **110–280**
Sedile Secondario **110–295**
Spina Elettrica E Accedisigari **110–225**

INDICE ALFABETICO

	PAGE
Tergicristallo Anteriore	110–190
Tergicristallo Parte Posteriore	110–195
Tetto	110–30
Tetto Alta Visibilita	110–60
Dressing	110–60
Finestrino	110–50

Carrozzeria

Carrozzeria	
Armatura Cofano	100–25
Armatura Reticolo	100–15
Cofano	100–5
Impugnatura Cofano	100–10
Cassetta Attrezz	100–60
Decalcomanie	
Sicurezza	100–80
Emblemi	100–65
Letteratura	100–140
Montaggio Cabina E Gradini	100–30
Montaggio E Gradini	
Piattaforma	100–55
Pedana E Batteria Scatola	100–45
Tabelle Velocita	100–70

Cerchione Y Contrappesi Per Ruote

Assale Anteriore 4 Ruote Motrici	
Parafanghi E Supporto	130–30
Contrappesi Per Ruote	130–80
Ruote Anteriori	
2 Ruote Motrici	130–5
4 Ruote Motrici	130–10
Ruote Posteriori	130–70
Montaggio Con Cono	130–70
Zeppe Per Ruote	130–85

Equipaggiamento Elettronica

A Pannello Computer	90–55
Decalcomania	90–55
Cavi Di Scatola Controllo / Mensola	
Cabina	90–125
Piattaforma	90–130
Cavi Dynashift	
Cabine	90–115
Cavi Elettrovalvole / Cavi Etcu−Panello Strumenti	
Cabina	90–95
Piattaforma	90–110
Cavi Sensori	
Cabina	90–135
Piattaforma	90–140
Computer Di Bordo	
Cavi	90–60
Equipaggiamento Elettrico	90–5
Equipaggiamento Elettronico	
Senori	90–40
Fasciocavi Dynashift	
Piattaforma	90–120
Full Powershift	
Cavo Principale De Transmissione	90–145
Fascio Di Conduttori Di Scorte	90–150
Radar	90–65
Rele Temporeggiatore Freno Di Parcheggio	
Full Powershift	90–155
Scatola Controllo	
Cabina	90–75
Piattaforma	90–85
Sollevatore Elettronico	
Cavi Principali	90–10
Pannello	90–30
Sollevatore Elettronico Piattaforma	
Cavi Principali	90–45
Sollevatore Idraulico	
Piattaforma	90–35

Equipaggiamento Illuminazione

Equipaggiamento Illuminazione	
Frontale	120–5
Posteriore	120–15
Equipaggiamento Segnalazione	120–30
Luce Illuminazione Campo	120–45
Con Tetto Alta Visibilita	120–45

INDICE ALFABETICO

	PAGE
Piattaforma Con Montanti	120–55
Luce Rotativa	120–65
Presaellectric Di Rimorchio	120–35
Frizione	
Accumulatore D' Assitenza Di Frenatura	20–105
Comando Frizione	
Cilindro Principale	20–100
Distanziale Anteriore	20–15
Distanziale Anteriore Con Sotto Coppia	20–40
Frizione A Bagno D'Olio	20–20
Frizione A Bagno D'Olio Con Sotto Coppia	20–25
Pedale Frizione E Leverismi	20–85
Sotto Coppia	20–30
Volano Motore	20–5
Idraulici	
Asta Livello / Centrale Carcassa	70–410
Circuito Idraulico Lubrificazione	70–140
Con Full Powershift	70–140
Comandi Con 2 Distributors	70–415
Comandi Con 3 Distributors	70–430
Con Dual Control	70–430
Comandi Con 4 Distributors	70–455
Con Dual Control	70–455
Comando Illuminazione Dynashift	70–20
Comando Illuminazione E Sotto	70–25
Distributore Auxiliarie	70–280
Distributore Di Sollevamenta	70–270
Freni	
Mecanic − Tubos Idraul. Montaggio	70–235
Pedale	70–175
Servo − Tubos Idraul. E Montaggio	70–205
Tubazioni Freno−Cilindro Princip.	70–200
Tubi Idraulica	70–250
Freno	
Cilindro Principale	70–185
Giunto Idraulico	70–390
Idraulica Ausiliare	
Piattaforma	70–465
Idraulici	
Tapa Destro	70–65
Load Sensing	
Coperchio Sinistro−Pompa /Filtro	70–45
Installazione Distributori Auxil.	70–285
Tapa Destro	70–50
Load Sensing Con Sotto Coppia	
Tapa Destro	70–85
Pompa Di Sterzo	70–30
Radiatore Olio	70–155
Tubazioni Idrauliche Di Sterzo	70–35
Valvola Idraulica	70–170
Volante E Colonna Fissa	70–5
Volante E Colonna Telescopico	70–10
Impianto Elettrico E Cruscotto	
Cabina Trattore	
Sotto Titolo Impianto Elettrico	80–45
Equipaggiamento Elettrico	80–40
Fasciacavi Di Luce Illuminazione Campo	80–140
Fasciocavi De Pannello Strumen / Bracciolo	80–75
Fasciocavi Di Comandi Full Powershift	
Braccioli	80–80
Fasciocavi Di Consola	80–100
Piattaforma	80–100
Fasciocavi Di Cruscoto	80–50
Fasciocavi Di Illuminazione	
Tetto	80–130
Fasciocavi Di Illuminazione Tetto	
Piattaforma	80–160
Fasciocavi Di Motore	80–35
Fasciocavi Di Tetto	80–125
Piattaforma	80–125
Impianto Elettrico E Cruscotto	80–30
Pannello Strumenti E Strumenti	80–5
Con Dynashift	80–5
Con Full Powershift	80–25
Plattaforma	
Cavi Elettrici	80–150

INDICE ALFABETICO

PAGE

Meccanismo Presa Di Forza

- Albero Presa Di Forza **50–5**
- Frizione Pto Indipendente **50–20**
- Meccanismo Accoppiamento Pto **50–50**
- Meccanismo Presa Di Forza
  - Piattaforma **50–60**
- Meccanismo Pto Proporzionale **50–55**
- Pto Anteriore
  - Cavi **50–120**
  - Innesto Ipto **50–90**
  - Presa Moto **50–85**
  - Scatola **50–75**
  - Tubazioni **50–110**
- Trasmissione Pto Indipendente
  - Due Velocita **50–25**

Motore E Equipaggiamento

- Albero Bilancieri **10–75**
- Albero Motore−Bielle E Pistoni **10–55**
- Alternatore
  - Magneti Marelli **10–30**
  - Valeo **10–35**
- Alternatore Cone Soporte **10–20**
- Batteria A Cavo **10–170**
- Comandi Acceleratore **10–290**
- Comando Acceleratore A Mano
  - Piattaforma **10–310**
- Compressore Sanden **10–190**
- Coppa Olio **10–120**
- Filtro Aria
  - Doppio Elemento **10–255**
- Filtro Olio Refrigeratore Integral **10–125**
- Impianto Iniezione Nafta (Diesel) **10–105**
- Ingranaggi E Albero Della Distribuzione **10–100**
- Monoblocco **10–50**
- Motore E Equipaggiamento **10–5**
- Motorino Di Avviamento
  - Magneti Marelli **10–40**
- Pompa Acqua, Termostato E Scambiatore Di Calore **10–130**
- Recupero D'Olio **10–70**

PAGE

- Riscaldatore Motore **10–165**
- Scarico Verticale Lateral **10–270**
- Sedimentatore **10–245**
- Serie Guarnizioni Motore **10–160**
- Sezione Comando Ventola **10–45**
- Sistema Di Aspirazione E Sistema Di Scarico **10–90**
- Sistema Di Raffreddamento
  - Motore **10–195**
- Sistema Di Riscaldamento
  - Parte Motore **10–200**
- Sistema Nafta A Bassa Pressione **10–140**
- Sistema Raffreddamento
  - Installazione Aria Condizionata **10–185**
- Tappo Riempimento E Sfiatatoio **10–65**
- Testata **10–60**
- Tubazioni Nafta
  - Filtri Nafta E Tubazioni **10–225**
  - Serbatoio Nafta E Fissaggio **10–205**
- Turbocompressore **10–80**
  - Tubi E Protezioni **10–80**

Piattaforma

- Decalcomanie
  - Piattaforma **115–25**
- Piattaforma
  - Cabina Alleggerita **115–15**
  - Cruscotto Cabina **115–10**
- Piattaforma Con Montanti
  - Retrovisore **115–20**
  - Tettuccio **115–5**

Tiranteria

- Attacco **40–75**
- Attacco Anteriore 35000n **40–195**
- Attacco Automatico
  - Dromone **40–175**
- Barra Di Trazione **40–165**
- Cerrojo Barra Superior **40–30**
- Gancio Automatico
  - Con Comando **40–170**

	PAGE
Gancio Automatico Piattaforma	
Con Comando	**40–190**
Scatola Livello	**40–15**
Sollevamento Elettronico	
Sollevamento Bracci	**40–5**
Stabilizzatore Tubo	**40–150**
Tiranteria	
Barra Trazione Orientabile	**40–105**
Cilindro Di Sollevatore	**40–10**
Inferiore Cat 2 I 3	**40–35**
Maglia Superior Con Gancio	**40–25**
Maglia Superior Con Snodo Sferico	**40–20**
Stabilizzatore Suola	**40–160**
Support De Barra Oscillante	**40–50**

Trasmissione

Bracciolo Di Comando	**25–130**
Comando Super Riduttore	**25–105**
Commandi Full Powershift	**25–145**
Dynashift	**25–10**
Dynashift Con Sotto Coppia	**25–20**
Full Powershift	
Electrovalvola	**25–215**
Gruppo Epicicloidale	**25–85**
Leva Cambio	**25–125**
Piattaforma	**25–125**
Leve Comando Di Inversore Manuale	
Comandi Sinistra	**25–115**
Sincronizzatore Trasmissione Rinforzoto	**25–55**
Trasmissione	
Albero Primario	**25–95**
Trasmissione Dynashift	**25–60**
Albero Primario	**25–60**
Albero Primario Senza Synchromesh	**25–35**
Albero Principale	**25–45**
Albero Secondario	**25–40**
Carcassa	**25–5**
Ingranaggi Trasmittenti	**25–30**
Trasmissione Full Power Shift	**25–180**
Albero Entrata	**25–180**

	PAGE
Pignoni 2 Eme	**25–185**
Pignoni 3 Eme	**25–190**
Pignoni 4 Eme	**25–195**
Pignoni 5 Eme	**25–200**
Pignoni 6 Eme	**25–205**
Pignoni 7 Eme	**25–210**
Pompa	**25–175**
Trasmissione Rinforzoto Inversore Sotto Coppia	
Albero Principale	**25–50**

INDICE ALFABETICO

C21

PAGE

Accesorios

Aire Acondicionado 150–60
Asiento 150–70
Cinturon De Seguridad 150–75
Computador A Bordo 150–45
Distribuidor Auxiliar 150–40
Doble Traccion De Eje Frontal
Guardabarros Y Soporte 150–85
Enganche Delantero 35000n 150–15
Frenaje De Remolque 150–30
Limpiaparabrisas Parte Trasera 150–65
Luz Giratoria 150–80
Soporte Aparat Embarcardo Para Cabina Tractor 150–55
Unidad Epicicloidal 150–5

Cabina Tractor

Aire Acondicionado 110–115
Flexible 110–115
Asiento 110–250
Grammer 110–250
Plataforma 110–280
Cabina De Tractor
Revestimiento 110–55
Cabina Tractor 110–95
Aislamiento 110–95
Calentador 110–135
Calentador Flexible 110–125
Dosel 110–200
Guardabarros 110–105
Retrovisor 110–235
Retrovisor Interior 110–245
Cinturon De Seguridad 110–290
Escotilla De Aire 110–40
Escotilla De Calefaccion 110–35
Lavaparabrisas 110–185
Limpiaparabrisas Parte Trasera 110–195
Mecanismo De Ventana Lateral 110–20
Mecanismo De Ventana Trasera 110–25
Puerta 110–10
Radio Instalacion 110–210

PAGE

Reloj 110–220
Revestimiento Panel Instrumentos 110–90
Tejado 110–30
Tejado Alta Visibilidad 110–60
Preparacion 110–60
Ventana 110–50
Toma Electrica Y Encendor De Cigarillos 110–225
Varillaje De Limpiaparabrisas Delantero 110–190
Ventanas 110–15

Eje Delantero

Bastidor Para Pesas Y Perno De Remolque 60–5
Defensa Y Arbol De Transmision 60–65
Doble Traccion De Eje Frontal
Mecanismo Bloqueo Diferencial 60–60
Doble Traccion Del Eje Frontal
Cilindros De Direccion 60–75
Eje Delantero 60–25
Eje Delantero 2 Ruedas Motrices
Cilindros 60–45
Eje Delantero 4 Ruedas Motrices 60–90
Accionamiento Final 60–90
Carter 60–80
Diferencial 60–85
Embrague 60–50
Eje Trasero
Caja Intermedia 60–55
Estructura Chasis 60–15
Pesa Central 60–20

Eje Trasero

Cajas De Eje Trasero Corto
Pinon Exteriorde Mando Final 30–35
Controles De Frenos
Con Powershift 30–20
Eje Trasero
Caja Intermedia 30–5
Carter Central 30–30
Diferencial 30–50
Freno De Mano

INDICE ALFABETICO

C22

	PAGE
Mando Inferior	30–15
Frenos	
Freno De Mano	30–25
Mecanismo De Traba De Diferencial Del Eje Trasero	
Hidromecanico	30–60
Multiplos Discosq	30–65
Embrague	
Acumulador D' Ayuda De Frenado	20–105
Embrague De Discos Sumergidos	20–20
Embrague De Discos Sumergidos Con Inversor Sub Par	20–25
Espaciador Delantero	20–15
Espaciador Delantero Con Inversor Sub Par	20–40
Inversor Sub Par	20–30
Mando De Embrague	
Cilindro Maestro	20–100
Pedal Del Embrague Y Mandos	20–85
Volante De Inercia	20–5
Emplanchados	
Caja Herramienta	100–60
Calcomanias	
Seguridad	100–80
Cuadros De Velocidad	100–70
Emblemas	100–65
Emplanchados	
Armadura Calandra	100–15
Armadura Capo	100–25
Capo	100–5
Puxador Capo	100–10
Estribos Y Batterie Carter	100–45
Literatura	100–140
Montantes Y Estribo	100–55
Plataforma	100–55
Enganches	
Barra De Tiro	40–165
Caja Niveladora	40–15
Chiavistello Barra Superior	40–30
Enganche	40–75
Enganche Automatico	
Con Control Remoto	40–170
Dromone	40–175
Enganche Automatico Plataforma	
Con Control Remoto	40–190
Enganche Delantero 35000n	40–195
Enganches	
Barra De Tiro Oscilante	40–105
Barra Enganche Con Bola	40–20
Barra Enganche Con Gancho	40–25
Estabilizador A Zapata	40–160
Gato Hidraulico	40–10
Inferior Cat 2 Y 3	40–35
Support De Barra De Tiro	40–50
Estabilizador Tubo	40–150
Levante Electronico	
Brazos Elevador	40–5
Equipo Alumbrado	
Equipo Alumbrado	
Frontal	120–5
Trasera	120–15
Herramental Senalizacion	120–30
Luce De Campo	
Plataforma Con Montantes	120–55
Luces De Campo	120–45
Con Tejado Alta Visibilidad	120–45
Luz Giratoria	120–65
Tomacorriente De Remolque	120–35
Equipo Electrico Y Tablero De Instrumentos	
Cabina Tractor	
Alambrado Electrico	80–45
Cableado Electrico	80–40
Equipo Electrico Y Tablero De Instrumentos	80–30
Haz De Hilos De Consolle	80–100
Plataforma	80–100
Haz De Hilos De Iluminacion	
Techo	80–130
Haz De Hilos De Iluminacion Techo	

INDICE ALFABETICO

C23

	PAGE
Plataforma	**80–160**
Haz De Hilos De Motor	**80–35**
Haz De Hilos De Panel De Instrumentos	**80–50**
Haz De Hilos De Sobre Full Powershift	
Descansabrazo	**80–80**
Haz De Hilos De Techo	**80–125**
Plataforma	**80–125**
Haz De Hilos Del Luces De Campo	**80–140**
Haz De Hilos Panel Instrument / Reposa Brazos	**80–75**
Panel De Instrumentos Con Indicapores	**80–5**
Con Dynashift	**80–5**
Con Full Powershift	**80–25**
Plataforma	
Cables Electricos	**80–150**
Equipo electronica	
Arnes De Caja De Control / Consola	
Cabina	**90–125**
Platforma	**90–130**
Arnes De Electrovalvula / Arnes Etcu−Arnes De Instrum.	
Cabina	**90–95**
Plataforma	**90–110**
Arnes Dynashift	
Cabine	**90–115**
Cableado Electrico	**90–5**
Caja De Control	
Cabina	**90–75**
Plataforma	**90–85**
Computador A Bordo	**90–60**
Cables	**90–60**
Calcomanias	**90–55**
Elevador Hidraulico	
Plataforma	**90–35**
Equipo Electronico	
Sensores	**90–40**
Full Powershift	
Mazo Cables De Repuesto	**90–150**
Mazo Cables Principale Transmi	**90–145**
Levante Electronico	
Consola	**90–30**
Levante Hidraulico	
Arnes Principal	**90–10**
Levante Hidraulico Plataforma	
Arnes Principal	**90–45**
Mazo Cables Dynashift	
Plataforma	**90–120**
Radar	**90–65**
Rele Diferir Controles De Frenos	
Full Powershift	**90–155**
Sensores De Arnes	
Cabina	**90–135**
Plataforma	**90–140**
Hidraulicos	
Acoplador Hidraulico	**70–390**
Bomba Direccion	**70–30**
Circuito Hidraulico Engrase	**70–140**
Con Full Powershift	**70–140**
Distribuidor Auxiliar	**70–280**
Distribuidor De Levante	**70–270**
Enfriador El Aciete	**70–155**
Frenos	
Assistados − Tuberias Y Accesorio	**70–205**
Cilindro Maestro	**70–185**
Mecanico − Tuberias Y Accesorio	**70–235**
Pedals	**70–175**
Tubos Frenos Y Cilindro Principal	**70–200**
Tubos Hidraulica	**70–250**
Hidraulicos	
Coperchio Derecho	**70–65**
Instalacion Hidraulica De Direccion	**70–35**
Load Sensing	
Coperchio Derecho	**70–50**
Instalacion Distribuidores Auxil.	**70–285**
Tapa Izquierdo − Bomba / Filtro	**70–45**
Load Sensing Con Inversor Sub Par	
Coperchio Derecho	**70–85**
Mando Alumbrado Dynashift	**70–20**
Mando Alumbrado Y Inversor	**70–25**
Mando Con 2 Distribuidors	**70–415**

INDICE ALFABETICO

C24

	PAGE
Mando Con 3 Distribuidors	70–430
Con Dual Control	70–430
Mando Con 4 Distribuidors	70–455
Con Dual Control	70–455
Sistema Hidraulico Auxiliar	
Plataforma	70–465
Valvula Hidraulica	70–170
Varilla Aceite / Alojamiento Centro	70–410
Volante Direccion Y Columna Fija	70–5
Volante Direccion Y Columna Telescopico	70–10
Llanta E Pesos De Ruedas	
Cunas De Rueda	130–85
Doble Traccion De Eje Frontal	
Guardabarros Y Soporte	130–30
Pesos De Rueda	130–80
Ruedas Delanteras	
2 Ruedas Motrices	130–5
4 Ruedas Motrices	130–10
Ruedas Traseras	130–70
Fijacion Con Cono	130–70
Mecanismo Accionamiento Toma De Fuerza	
Eje Toma De Fuerza	50–5
Embrague De Toma De Fuerza Independiente	50–20
Mecanismo Accionamiento Toma De Fuerza	
Plataforma	50–60
Mecanismo De Mando De Toma De Fuerza Independiente	
2 Velocidades	50–25
Tdf − Mecanismo De Mando De Acople	50–50
Tdf − Mecanismo De Mando Proporcional	50–55
Tdf Delantera	
Arnes	50–120
Caja	50–75
Embrague Ipto	50–90
Lineas	50–110
Mando	50–85
Motor Y Equipamente	
Acelerador Manual	
Plataforma	10–310
Admision Y Escape	10–90
Alternador	
Magneti Marelli	10–30
Valeo	10–35
Alternador Y Support	10–20
Arranque	
Magneti Marelli	10–40
Battery Y Cable	10–170
Bloque−Cylindros	10–50
Bomba Del Agua, Termostato Cambiador De Temperatura	10–130
Calentador Motor	10–165
Carter Del Aceite Lubricante	10–120
Ciguenal, Pistones A Bielas	10–55
Compresor Sanden	10–190
Culata	10–60
Distribucion Y Eje De Levas	10–100
Eje De Balancin	10–75
Equipo De Inyeccion Del Combustible (Diesel)	10–105
Escape Vertical Lano Lateral	10–270
Filtro Del Aire	
Elemento Doble Seco	10–255
Filtro Y Engriador Integral	10–125
Jeugos De Empaquetaduras De Motor	10–160
Mandos Acelerador	10–290
Motor Y Equipamente	10–5
Recuperacion Del Aceite	10–70
Reniflard Y Llenado Del Aceite Lubricante	10–65
Seccion De Mando De Ventilador	10–45
Sedimentador	10–245
Sistema Combustible	
Deposito Combustible Sujecciones	10–205
Filtros Combustible Y Conduccione	10–225
Sistema De Calefaccion De Cabina	
Pieza De Motor	10–200
Sistema De Combustible A Baja Presion	10–140
Sistema De Refrigeracion	
Instalacion Con Aire Acondicionad	10–185
Sistema Refrigeracion	
Motor	10–195

	PAGE
Turbo−Soplador	10–80
Tubos Y Protect.Contra El Calor	10–80
Plataforma	
Callomanias	
Plataforma	115–25
Plataforma	
Revestimiento	115–15
Revestimiento Panel Instrumentos	115–10
Plataforma Con Montantes	
Retrovisor	115–20
Techo	115–5
Transmision	
Caja Del Velocidades Full Power Shift	25–175
Bomba	25–175
Eje Primario	25–180
Pinones 2 Eme	25–185
Pinones 3 Eme	25–190
Pinones 4 Eme	25–195
Pinones 5 Eme	25–200
Pinones 6 Eme	25–205
Pinones 7 Eme	25–210
Dynashift	25–10
Dynashift Con Inversor Sub Par	25–20
Full Powershift	
Electrovalvula	25–215
Mando De Caja Superlenta	25–105
Mando Full Powershift	25–145
Palanca De Cambio	25–120
Palanca De Cambio De Velocidades	
Plataforma	25–125
Palancas De Mando Inversor Mecanico	
Mandos Izquierda	25–115
Reposa Brazos De Control	25–130
Sincronizade Transmision Servicio Pesado	25–55
Transmision	
Arbol Generador De Fuerza	25–95
Transmision Dynashift	25–60
Arbol Generador De Fuerza	25–60
Carter	25–5
Eje Impulsor Con Cambio Sincro.	25–35
Eje Principal	25–45
Eje Secundario	25–40
Transmision Servicio Pesado Inversor Sub Par	
Eje Principal	25–50
Transmission Dynashift	
Pinones Receptores	25–30
Unidad Epicicloidal	25–85

RESERVED

RECOMMENDED STOCKING PARTS

D1

		Qty	PAGE
BELT	3386214M1	1	**10 185**
BULB	3405180M1	1	**120–65**
BULB	3713341M1	2	**120 40**
		2	**120 45**
BULB	71129920	1	**80–130**
BULB	72505208	26	**80 25**
BULB 12V 1.2W	3302213M1	1	**110–225**
BULB 12V 1.2W	3405185M1	1	**80 5**
		33	**80–10**
		33	**80–15**
		33	**80–20**
		1	**80 30**
		1	**110–230**
BULB 12V 10W	3002706X1	1	**120–15**
		1	**120 25**
BULB 12V 10W	3385821M1	2	**80–105**
		2	**80–110**
		2	**80 115**
		2	**80–120**
BULB 12V 5W	1420037M1	1	**120–5**
		1	**120 10**
BULB 12V 5W	963333M1	1	**110–220**
BULB 21W SIDE	621235M1	1	**120 5**
		1	**120 10**
		2	**120–15**
		1	**120–20**
		1	**120 25**
BULB H/L 45/40W	961866M1	1	**120–5**
		1	**120–10**
BULB H3	1628494M1	1	**120 5**
		4	**120–40**
		1	**120–40**
		2	**120 45**
		1	**120–50**
		2	**120–50**
		1	**120–55**
		2	**120 60**
BULB P/LAMP	70928348	1	**120–50**
BULB S/L 21/5W	908543M1	1	**120 20**
		1	**120–25**
CAB FILTER	3388840M2	1	**110–45**
		1	**110 125**
CAB FILTER	3389746M1	1	**110–45**
		1	**110–125**

		Qty	PAGE
DIODE	1897312M1	1	**25 110**
		1	**90–95**
		1	**90–110**
DIODE	3777531M1	2	**80 50**
		2	**80–55**
		2	**80–60**
		2	**80–65**
		2	**80 70**
ELECTRICAL PLUG	3760032M1	1	**110–225**
ELECTROVALVE	3791106M1	1	**30 20**
ELECTROVALVE	3792468M2	2	**20–80**
ELEMENT,AIR FITR	3901477M1	1	**10–265**
ELEMENT,AIR FITR	3901478M1	1	**10–265**
ENG.SPEED SENSOR	3779280M1	1	**25–160**
		1	**25 165**
FEMALE COUPLER	3792559M1	1	**70–390**
		1	**70–395**
		1	**70 400**
		1	**70–405**
FEMALE COUPLER	3792561M1	1	**70–390**
		1	**70 395**
		1	**70–400**
		1	**70–405**
FEMALE COUPLER	3792562M1	1	**70 395**
		1	**70–400**
		1	**70–405**
FEMALE COUPLER	3792563M1	1	**70 400**
		1	**70–405**
FILTER	3712495M1	1	**10–185**
FILTER	3792285M91	1	**20 70**
FILTER INSERT	3618662M1	1	**70–55**
		1	**70 60**
		1	**70 115**
		1	**70–120**
		1	**70–140**
FILTER INSERT	3780299M1	1	**10 245**
FILTER INSERT	3780931M1	1	**10–245**
FILTER INSERT	3792287M1	1	**20 70**
FUEL ELEMENT	836218M91	1	**10–155**
FUSE	1695939M1	3	**80 65**
		3	**80–70**
FUSE	1695966M1	6	**80–65**
		7	**80 70**
		1	**90–155**

		Qty	PAGE
FUSE	3387318M1	1	**10 180**
		1	**50–120**
		X	**80–50**
		1	**80–60**
		1	**90 45**
FUSE	3387319M1	1	**80–40**
		X	**80–50**
		X	**80 55**
		4	**80–60**
		3	**80–65**
		3	**80–70**
FUSE	3387322M1	X	**80–50**
		X	**80–55**
		4	**80–60**
		3	**80 65**
		3	**80–70**
FUSE	3580868M1	1	**80–50**
		1	**80 55**
		2	**80–60**
		2	**80–65**
		3	**80 70**
		1	**90 10**
		1	**90–15**
		1	**90–20**
		1	**90 25**
FUSE	3620025M1	X	**80–50**
		X	**80–55**
		4	**80 60**
FUSE	3620026M1	1	**80–40**
		1	**80–45**
		X	**80 50**
		X	**80–55**
		15	**80–60**
FUSE	3712661M1	X	**80 50**
		X	**80–55**
		4	**80–60**
		6	**80–65**
		4	**80 70**
		1	**110–225**
		1	**110–230**
FUSE	3780003M1	1	**80 60**
		1	**80–70**
HEADLAMP	5015739M91	2	**120–50**
HOOK CABLE	3715975M3	1	**40 185**
		1	**40–190**
HOSE	3780230M1	1	**10 195**

		Qty	PAGE
HOSE	3780508M3	1	**10 195**
IGNITION KEY	3813361M1	1	**80–30**
INDICATOR	3618663M3	1	**70 55**
		1	**70 60**
		1	**70–115**
		1	**70–120**
INDUCTIVE TAKER	3583287M2	1	**25 5**
		1	**90–40**
INDUCTIVE TAKER	3618249M1	1	**25–75**
		1	**25 80**
		1	**90–115**
		1	**90–120**
INDUCTIVE TAKER	3712058M1	1	**90 40**
INDUCTIVE TAKER	3712728M3	1	**40–5**
INDUCTIVE TAKER	3790881M1	1	**90 40**
INTAKE HEATER	3583543M2	1	**10–90**
		2	**10–95**
KIT, BELT	3617180M91	1	**10–5**
		1	**10–10**
		1	**10–15**
KIT, JOINT	3792639M1	1	**70 320**
		1	**70–360**
		1	**70–370**
KIT, SPANNER	3902584M91	1	**110 10**
KIT,JOINT/GASKET	4223732M91	1	**10–160**
LAMP	3714399M92	2	**120 5**
		6	**120–60**
LIGHT	3713911M92	2	**120–25**
LIGHT	3714184M92	2	**120–5**
		2	**120–10**
LIGHT	3714185M91	2	**120 10**
LIGHT	3778456M92	2	**120–60**
LOW PR.OIL TRMTR	3381387M4	1	**25 165**
		1	**70 50**
		1	**70–115**
		1	**70–120**
MALE COUPLER	1026700M91	4	**70 390**
		6	**70–395**
		8	**70–400**
MALE COUPLER	3583932M1	4	**70 390**
		6	**70–395**
		8	**70–400**

RECOMMENDED STOCKING PARTS

D2

		Qty	PAGE
NUT SPECIAL	3384600M2	1	30 20
		24	130–55
		24	130–60
		24	130–65
		16	130 75
NUT SPECIAL	3712611M2	20	130–10
		20	130–15
		20	130 20
		20	130–25
		20	130–70
O RING	1001833M1	1	70 50
O RING	1007240M1	2	70–50
OIL FILTER	1447048M1	2	10 125
OLIVE	376524X1	1	10–105
		1	10–115
		1	10 140
		1	10 145
		5	10–145
OLIVE	376525X1	1	10 75
PIN HITCH	3716103M2	1	40–125
		1	40–130
		1	40 135
		1	40 140
		1	40–145
PIN HITCH	3793419M2	1	40 115
POTENTIOMETER	3902946M91	1	25–145
		1	25–155
POTENTIOMETER	3903312M91	1	25 135
		1	25–145
PRESSURE INTAKE	3384387M1	1	20–75
		5	20 80
		1	70–55
		2	70–55
		1	70 60
		2	70 60
		1	70–110
		1	70–115
		1	70 120
		2	70–130
		1	70–205
		1	70–215
		1	70 220
PRESSURE SWITCH	1877721M92	1	80–35
PRESSURE SWITCH	3808462M1	1	10 255
		1	10 260
PRESSURE VALVE	3581307M2	1	70 80
		1	70–85
		1	70–125
PRESSURE VALVE	3779283M91	1	25 160
PTO SPEED SENSOR	3716042M1	1	90–40
RADIATOR CAP	180224M92	1	10 195
REAR LIGHT	5015731M91	2	120–20
RELAY	3387326M2	1	80–30
		X	120 40
		2	120–50
		1	120–55
RELAY	3615652M1	1	25 110
		1	50–120
		1	80–30
		2	80–30
		X	120 40
		X	120–45
		3	120–55
		1	120 60
RELAY	3618239M1	1	25–110
RELAY	3779879M1	1	80–30
		1	80 35
RELIEF VALVE	3779244M91	1	25–165
		1	25–170
SENDER	1877731M92	1	80–35
SENDER	5015257M1	1	80–35
SENDER	72512518	1	80 35
SENSING PIN	3713764M1	2	40–35
		2	40 40
		2	40 45
SENSOR	3782556M1	1	25–120
SOLENOID	3619763M1	2	20 75
		2	20–80
		1	25–75
		1	25 80
		1	30 60
		1	30–65
		2	70–65
		3	70 75
SOLENOID	3779284M91	4	25–160
		5	25–165
SPOOL	3619762M1	1	20 75
		1	20–80
		1	25–75
		1	25–80
		1	30 60
		1	30–65
		1	50–75
		1	50–80
		2	70 65
		3	70–75
SPOOL	3619824M1	1	20–75
		1	20 80
STRAINER	3712404M1	1	20–45
STRAINER	3714453M1	1	70 45
STRAINER	3716334M1	1	70–140
STRAINER	3790002M1	1	70 45
STUD	3384601M4	16	30–35
		16	30–40
		16	30 45
STUD	3384602M4	16	30–35
		16	30–40
		16	30 45
SWITCH	3370427M91	1	80–30
SWITCH	3712201M1	1	10–180
SWITCH,INDIRECT	3616429M1	1	110–175
		1	110–180
SWITCH,INDIRECT	3619445M1	1	50 30
SWITCH,INDIRECT	3712668M2	1	70–55
		1	70–60
		1	70 115
		1	70–120
SWITCH,INDIRECT	3713142M2	1	80–30
SWITCH,INDIRECT	3713145M1	1	80 130
SWITCH,INDIRECT	3713146M1	1	110–165
		1	120 65
SWITCH,INDIRECT	3713147M1	1	110–195
SWITCH,INDIRECT	3713149M2	1	80–30
SWITCH,INDIRECT	3713348M1	1	90–105
		1	90–125
		1	90–130
SWITCH,INDIRECT	3713669M2	1	70–20
		1	70–25
SWITCH,INDIRECT	3714137M1	3	90 10
		3	90–15
		3	90–20
		3	90–25
		1	90 45
SWITCH,INDIRECT	3714138M1	3	90–10
		3	90–15
		3	90 20
		3	90–25
SWITCH,INDIRECT	3715822M4	1	70–20
SWITCH,INDIRECT	3777568M2	1	90–10
		1	90–15
		1	90–20
		1	90 25
SWITCH,INDIRECT	3778375M2	1	20–95
SWITCH,INDIRECT	3778391M1	1	120 40
		1	120 45
		1	120–50
		1	120–55
		1	120 60
SWITCH,INDIRECT	3780077M2	1	25–130
		1	25–140
		1	25 150
SWITCH,INDIRECT	3780395M2	1	20–85
		1	30–25
		2	70 175
		2	70–180
		1	80–105
		1	80–110
		1	80 115
		1	80–120
SWITCH,INDIRECT	3780552M1	1	120–40
		1	120 45
		1	120–50
		1	120–55
SWITCH,INDIRECT	3780580M1	1	20 85
		1	20–90
		1	20–95
SWITCH,INDIRECT	3780581M1	1	25 105
		1	25–110
		2	50–50
		2	50–55
		1	50 60
		X	50–60
SWITCH,INDIRECT	3782108M1	1	25–130
		1	25 140

RECOMMENDED STOCKING PARTS

		Qty	PAGE
SWITCH,INDIRECT	3783086M1	1	**50 120**
SWITCH,INDIRECT	3783832M1	1	**20–90**
		1	**20–95**
SWITCH,INDIRECT	3792196M1	1	**25 75**
		1	**25–80**
		1	**30–20**
SWITCH,INDIRECT	3902860M1	1	**25 145**
		1	**25–155**
THERMOCONTACT	3790121M1	1	**70–50**
		1	**70 115**
		1	**70–120**
TOGGLE	3042427M1	2	**40–40**
		2	**40 45**
TOGGLE	3042428M1	2	**40–40**
		2	**40–45**
TOGGLE	3042430M1	2	**40–40**
		2	**40–45**
TOGGLE	3042431M1	2	**40 40**
		2	**40–45**
TOGGLE	3042433M1	1	**40–25**
TOGGLE	3104945M1	1	**60 40**
TOGGLE	3764286M1	2	**60–70**
TOGGLE	3782685M1	2	**40 195**
TOGGLE	3782686M1	2	**40–195**
TOGGLE	3791537M1	1	**40 20**
TOGGLE	3900885M1	1	**40–195**
TOOL	3813582M1	1	**100 5**
TRANSMITTER	3777157M2	1	**20–90**
		1	**20–95**
TRANSMITTER	3779237M1	1	**25 165**
TRANSMITTER	72502305	1	**80–35**
WIPER BLADE	3713195M1	1	**110 195**

Qty	PAGE

Qty	PAGE

Qty	PAGE

PIECES DONT LE STOCKAGE EST RECOMMANDE

D4

		Qty	PAGE
AMPOULE	3405180M1	1	120 65
AMPOULE	3713341M1	2	120–40
		2	120–45
AMPOULE	71129920	1	80 130
AMPOULE	72505208	26	80–25
AMPOULE 12V 1.2W	3302213M1	1	110 225
AMPOULE 12V 1.2W	3405185M1	1	80–5
		33	80–10
		33	80 15
		33	80–20
		1	80–30
		1	110–230
AMPOULE 12V 10W	3002706X1	1	120–15
		1	120–25
AMPOULE 12V 10W	3385821M1	2	80 105
		2	80–110
		2	80–115
		2	80–120
AMPOULE 12V 5W	1420037M1	1	120–5
		1	120–10
AMPOULE 12V 5W	963333M1	1	110 220
AMPOULE 21/5W	908543M1	1	120–20
		1	120–25
AMPOULE 45/40W	961866M1	1	120 5
		1	120–10
AMPOULE H3	1628494M1	1	120 5
		4	120 40
		1	120–40
		2	120–45
		1	120 50
		2	120–50
		1	120–55
		2	120–60
AMPOULE LAT 21W	621235M1	1	120–5
		1	120–10
		2	120–15
		1	120 20
		1	120–25
BALAI ESSUIE GL	3713195M1	1	110–195
BOUCHONRADIATEUR	180224M92	1	10–195
BROCHE	3716103M2	1	40–125
		1	40 130
		1	40–135
		1	40–140
		1	40–145
BROCHE	3793419M2	1	40 115
CABL CDE CROCHET	3715975M3	1	40 185
		1	40–190
CAPTEUR EFFORT	3713764M1	2	40–35
		2	40 40
		2	40–45
CAPTEUR INDUCTIF	3583287M2	1	25–5
		1	90 40
CAPTEUR INDUCTIF	3618249M1	1	25–75
		1	25–80
		1	90 115
		1	90–120
CAPTEUR INDUCTIF	3712058M1	1	90–40
CAPTEUR INDUCTIF	3712728M3	1	40 5
CAPTEUR INDUCTIF	3790881M1	1	90–40
CAPTEUR VIT MOT	3779280M1	1	25 160
		1	25–165
CAPTEUR VIT PTO	3716042M1	1	90–40
CLE DE CONTACT	3813361M1	1	80–30
CONTACTEUR	3616429M1	1	110–175
		1	110 180
CONTACTEUR	3619445M1	1	50–30
CONTACTEUR	3712668M2	1	70–55
		1	70 60
		1	70–115
		1	70–120
CONTACTEUR	3713142M2	1	80 30
CONTACTEUR	3713145M1	1	80–130
CONTACTEUR	3713146M1	1	110 165
		1	120–65
CONTACTEUR	3713147M1	1	110–195
CONTACTEUR	3713149M2	1	80 30
CONTACTEUR	3713348M1	1	90–105
		1	90 125
		1	90 130
CONTACTEUR	3713669M2	1	70–20
		1	70 25
CONTACTEUR	3714137M1	3	90–10
		3	90–15
		3	90–20
		3	90 25
		1	90–45
CONTACTEUR	3714138M1	3	90–10
		3	90 15
		3	90–20
		3	90–25
CONTACTEUR	3715822M4	1	70 20
CONTACTEUR	3777568M2	1	90 10
		1	90–15
		1	90–20
		1	90–25
CONTACTEUR	3778375M2	1	20–95
CONTACTEUR	3778391M1	1	120–40
		1	120 45
		1	120–50
		1	120–55
		1	120–60
CONTACTEUR	3780077M2	1	25–130
		1	25–140
		1	25–150
CONTACTEUR	3780395M2	1	20–85
		1	30–25
		2	70–175
		2	70 180
		1	80–105
		1	80–110
		1	80–115
		1	80 120
CONTACTEUR	3780552M1	1	120–40
		1	120–45
		1	120 50
		1	120–55
CONTACTEUR	3780580M1	1	20–85
		1	20 90
		1	20–95
CONTACTEUR	3780581M1	1	25–105
		1	25 110
		2	50–50
		2	50–55
		1	50 60
		X	50 60
CONTACTEUR	3782108M1	1	25–130
		1	25–140
CONTACTEUR	3783086M1	1	50–120
CONTACTEUR	3783832M1	1	20–90
		1	20 95
CONTACTEUR	3792196M1	1	25–75
		1	25–80
		1	30 20
CONTACTEUR	3902860M1	1	25–145
		1	25–155
COUPLEUR FEMELLE	3792559M1	1	70 390
		1	70–395
		1	70–400
		1	70–405
COUPLEUR FEMELLE	3792561M1	1	70–390
		1	70–395
		1	70–400
		1	70 405
COUPLEUR FEMELLE	3792562M1	1	70–395
		1	70–400
		1	70 405
COUPLEUR FEMELLE	3792563M1	1	70–400
		1	70–405
COUPLEUR MALE	1026700M91	4	70–390
		6	70–395
		8	70–400
COUPLEUR MALE	3583932M1	4	70 390
		6	70–395
		8	70–400
COURROIE	3386214M1	1	10 185
CREPINE	3712404M1	1	20–45
CREPINE	3714453M1	1	70 45
CREPINE	3716334M1	1	70–140
CREPINE	3790002M1	1	70 45
DETECTEUR	3782556M1	1	25–120
DIODE	1897312M1	1	25 110
		1	90 95
		1	90–110
DIODE	3777531M1	2	80 50
		2	80 55
		2	80–60
		2	80–65
		2	80 70
DURITE	3780230M1	1	10–195
DURITE	3780508M3	1	10 195
ECROU SPECIAL	3384600M2	1	30–20
		24	130–55
		24	130–60
		24	130 65
		16	130–75
ECROU SPECIAL	3712611M2	20	130–10
		20	130 15
		20	130–20
		20	130–25
		20	130 70
ELECTROVANNE	3791106M1	1	30–20

PIECES DONT LE STOCKAGE EST RECOMMANDE

D5

		Otv	PAGE
ELECTROVANNE	3792468M2	2	**20 80**
ELEMENT FILTRANT	3618662M1	1	**70−55**
		1	**70−60**
		1	**70 115**
		1	**70−120**
		1	**70−140**
ELEMENT FILTRANT	3780299M1	1	**10 245**
ELEMENT FILTRANT	3780931M1	1	**10−245**
ELEMENT FILTRANT	3792287M1	1	**20−70**
ELEMENT, FIL AIR	3901477M1	1	**10−265**
ELEMENT, FIL AIR	3901478M1	1	**10−265**
ELEMENTCARBURANT	836218M91	1	**10−155**
EMETTEUR	1877731M92	1	**80−35**
EMETTEUR	5015257M1	1	**80 35**
EMETTEUR	72512518	1	**80−35**
FEU	3713911M92	2	**120 25**
FEU	3714184M92	2	**120−5**
		2	**120−10**
FEU	3714185M91	2	**120−10**
FEU	3778456M92	2	**120−60**
FEU ARRIERE	5015731M91	2	**120 20**
FILTRE	3712495M1	1	**10−185**
FILTRE	3792285M91	1	**20 70**
FILTRE CABINE	3388840M2	1	**110−45**
		1	**110−125**
FILTRE CABINE	3389746M1	1	**110 45**
		1	**110−125**
FILTRE HUILE	1447048M1	2	**10 125**
FUSIBLE	1695939M1	3	**80−65**
		3	**80−70**
FUSIBLE	1695966M1	6	**80 65**
		7	**80−70**
		1	**90−155**
FUSIBLE	3387318M1	1	**10 180**
		1	**50−120**
		X	**80−50**
		1	**80 60**
		1	**90 45**
FUSIBLE	3387319M1	1	**80−40**
		X	**80−50**
		X	**80 55**
		4	**80−60**
		3	**80−65**
		3	**80 70**

		Otv	PAGE
FUSIBLE	3387322M1	X	**80 50**
		X	**80−55**
		4	**80−60**
		3	**80−65**
		3	**80 70**
FUSIBLE	3580868M1	1	**80−50**
		1	**80−55**
		2	**80 60**
		2	**80−65**
		3	**80−70**
		1	**90−10**
		1	**90 15**
		1	**90−20**
		1	**90−25**
FUSIBLE	3620025M1	X	**80 50**
		X	**80−55**
		4	**80−60**
FUSIBLE	3620026M1	1	**80 40**
		1	**80−45**
		X	**80−50**
		X	**80 55**
		15	**80 60**
FUSIBLE	3712661M1	X	**80−50**
		X	**80 55**
		4	**80 60**
		6	**80−65**
		4	**80−70**
		1	**110 225**
		1	**110−230**
FUSIBLE	3780003M1	1	**80−60**
		1	**80 70**
GOUJON	3384601M4	16	**30−35**
		16	**30−40**
		16	**30 45**
GOUJON	3384602M4	16	**30−35**
		16	**30−40**
		16	**30 45**
INDICATEUR	3618663M3	1	**70−55**
		1	**70−60**
		1	**70 115**
		1	**70−120**
INTERRUPTEUR	3370427M91	1	**80−30**
INTERRUPTEUR	3712201M1	1	**10 180**
JEU CLES	3902584M91	1	**110−10**

		Otv	PAGE
JEU COURROIES	3617180M91	1	**10 5**
		1	**10−10**
		1	**10−15**
JEU DE JOINTS	4223732M91	1	**10 160**
JEU JOINTS	3792639M1	1	**70−320**
		1	**70−360**
		1	**70 370**
JOINT TORIQUE	1001833M1	1	**70−50**
JOINT TORIQUE	1007240M1	2	**70−50**
LAMPE	70928348	1	**120−50**
MANO CONTACT	1877721M92	1	**80−35**
MANO CONTACT	3808462M1	1	**10−255**
		1	**10−260**
OLIVE	376524X1	1	**10 105**
		1	**10−115**
		1	**10−140**
		1	**10−145**
		5	**10 145**
OLIVE	376525X1	1	**10−75**
OUTIL	3813582M1	1	**100 5**
PHARE	3714399M92	2	**120−5**
		6	**120−60**
PHARE AVANT	5015739M91	2	**120 50**
POTENTIOMETRE	3902946M91	1	**25−145**
		1	**25−155**
POTENTIOMETRE	3903312M91	1	**25−135**
		1	**25−145**
PRISE ELECTRIQUE	3760032M1	1	**110 225**
PRISE PRESSION	3384387M1	1	**20−75**
		5	**20−80**
		1	**70 55**
		2	**70−55**
		1	**70−60**
		2	**70−60**
		1	**70 110**
		1	**70−115**
		1	**70−120**
		2	**70−130**
		1	**70 205**
		1	**70−215**
		1	**70−220**
RELAIS	3387326M2	1	**80 30**
		X	**120−40**
		2	**120−50**
		1	**120 55**

		Otv	PAGE
RELAIS	3615652M1	1	**25 110**
		1	**50−120**
		1	**80−30**
		2	**80−30**
		X	**120 40**
		X	**120−45**
		3	**120−55**
		1	**120−60**
RELAIS	3618239M1	1	**25−110**
RELAIS	3779879M1	1	**80−30**
		1	**80 35**
ROTULE	3042427M1	2	**40−40**
		2	**40−45**
ROTULE	3042428M1	2	**40−40**
		2	**40−45**
ROTULE	3042430M1	2	**40 40**
		2	**40 45**
ROTULE	3042431M1	2	**40−40**
		2	**40 45**
ROTULE	3042433M1	1	**40−25**
ROTULE	3104945M1	1	**60−40**
ROTULE	3764286M1	2	**60−70**
ROTULE	3782685M1	2	**40−195**
ROTULE	3782686M1	2	**40 195**
ROTULE	3791537M1	1	**40−20**
ROTULE	3900885M1	1	**40 195**
SOLENOIDE	3619763M1	2	**20−75**
		2	**20−80**
		1	**25 75**
		1	**25−80**
		1	**30−60**
		1	**30 65**
		2	**70 65**
		3	**70−75**
SOLENOIDE	3779284M91	4	**25 160**
		5	**25 165**
THERMOCONTACT	3790121M1	1	**70−50**
		1	**70−115**
		1	**70 120**
THERMOSTART	3583543M2	1	**10−90**
		2	**10−95**

PIECES DONT LE STOCKAGE EST RECOMMANDE

D6

		Otv	PAGE
TIROIR	3619762M1	1	**20 75**
		1	**20–80**
		1	**25–75**
		1	**25–80**
		1	**30 60**
		1	**30–65**
		1	**50–75**
		1	**50–80**
		2	**70 65**
		3	**70–75**
TIROIR	3619824M1	1	**20–75**
		1	**20 80**
TR HUILE BASSEPR	3381387M4	1	**25–165**
		1	**70–50**
		1	**70 115**
		1	**70–120**
TRANSMETTEUR	3777157M2	1	**20–90**
		1	**20 95**
TRANSMETTEUR	3779237M1	1	**25–165**
TRANSMETTEUR	72502305	1	**80 35**
VALVE	3581307M2	1	**70–80**
		1	**70–85**
		1	**70 125**
VALVE	3779283M91	1	**25–160**
VALVE SECURITE	3779244M91	1	**25 165**
		1	**25 170**

LAGERVORSCHLAGSTEILE

D7

		Otv	PAGE
ANSAUGDRUCK	3384387M1	1	20 75
		5	20–80
		1	70–55
		2	70–55
		1	70 60
		2	70–60
		1	70–110
		1	70–115
		1	70 120
		2	70–130
		1	70–205
		1	70 215
		1	70–220
ANSCHLUSS	3713764M1	2	40–35
		2	40 40
		2	40 45
ANZEIGER	3618663M3	1	70–55
		1	70 60
		1	70 115
		1	70–120
DICHTUNGS–SATZ	4223732M91	1	10 160
DICHTUNGSSATZ	3792639M1	1	70–320
		1	70–360
		1	70 370
DIODE	1897312M1	1	25–110
		1	90–95
		1	90 110
DIODE	3777531M1	2	80–50
		2	80–55
		2	80 60
		2	80 65
		2	80–70
DRUCKSCHALTER	1877721M92	1	80 35
DRUCKSCHALTER	3808462M1	1	10–255
		1	10–260
DRUCKSCHNIEDERDR	3381387M4	1	25 165
		1	70–50
		1	70–115
		1	70–120
DRUCKVENTIL	3581307M2	1	70–80
		1	70–85
		1	70–125
DRUCKVENTIL	3779283M91	1	25–160
ELECTRON.VENTIL	3791106M1	1	30–20
ELECTRON.VENTIL	3792468M2	2	20 80
FAHRSCHEINWERFER	5015739M91	2	120–50

		Otv	PAGE
FILTER	3712495M1	1	10 185
FILTER	3792285M91	1	20–70
FILTEREINSATZ	3618662M1	1	70 55
		1	70 60
		1	70–115
		1	70–120
		1	70 140
FILTEREINSATZ	3780299M1	1	10–245
FILTEREINSATZ	3780931M1	1	10–245
FILTEREINSATZ	3792287M1	1	20–70
FILTEREINSATZ.	836218M91	1	10–155
FILTERSIEB	3712404M1	1	20–45
FILTERSIEB	3714453M1	1	70–45
FILTERSIEB	3716334M1	1	70 140
FILTERSIEB	3790002M1	1	70–45
GEBER	1877731M92	1	80 35
GEBER	5015257M1	1	80–35
GEBER	72512518	1	80 35
GELENKZAPFEN	3042427M1	2	40–40
		2	40–45
GELENKZAPFEN	3042428M1	2	40 40
		2	40–45
GELENKZAPFEN	3042430M1	2	40–40
		2	40 45
GELENKZAPFEN	3042431M1	2	40–40
		2	40–45
GELENKZAPFEN	3042433M1	1	40–25
GELENKZAPFEN	3104945M1	1	60–40
GELENKZAPFEN	3764286M1	2	60 70
GELENKZAPFEN	3782685M1	2	40–195
GELENKZAPFEN	3782686M1	2	40 195
GELENKZAPFEN	3791537M1	1	40–20
GELENKZAPFEN	3900885M1	1	40 195
GLUEHL 12V 1.2W	3302213M1	1	110–225
GLUEHL 12V 1.2W	3405185M1	1	80 5
		33	80 10
		33	80–15
		33	80–20
		1	80 30
		1	110–230
GLUEHL 12V 10W	3002706X1	1	120–15
		1	120 25
GLUEHL 12V 10W	3385821M1	2	80–105
		2	80–110
		2	80 115
		2	80–120

		Otv	PAGE
GLUEHL 12V 5W	1420037M1	1	120 5
		1	120–10
GLUEHL 12V 5W	963333M1	1	110–220
GLUEHL.45/40W	961866M1	1	120 5
		1	120–10
GLUEHL.ARB.SCH.	70928348	1	120 50
GLUEHLAMPE	3405180M1	1	120–65
GLUEHLAMPE	3713341M1	2	120–40
		2	120 45
GLUEHLAMPE	71129920	1	80–130
GLUEHLAMPE	72505208	26	80 25
GLUEHLAMPE 21/5W	908543M1	1	120–20
		1	120–25
GLUEHLAMPE 21W	621235M1	1	120 5
		1	120–10
		2	120–15
		1	120 20
		1	120–25
GLUEHLAMPE H3	1628494M1	1	120–5
		4	120 40
		1	120 40
		2	120–45
		1	120–50
		2	120 50
		1	120–55
		2	120–60
HAKENKABEL	3715975M3	1	40 185
		1	40–190
KABINE FILTER	3388840M2	1	110–45
		1	110 125
KABINE FILTER	3389746M1	1	110–45
		1	110–125
KONTAKTSCHALTER	3616429M1	1	110 175
		1	110–180
KONTAKTSCHALTER	3619445M1	1	50 30
KONTAKTSCHALTER	3712668M2	1	70–55
		1	70–60
		1	70–115
		1	70 120
KONTAKTSCHALTER	3713142M2	1	80–30
KONTAKTSCHALTER	3713145M1	1	80 130
KONTAKTSCHALTER	3713146M1	1	110–165
		1	120–65
KONTAKTSCHALTER	3713147M1	1	110–195
KONTAKTSCHALTER	3713149M2	1	80–30

		Otv	PAGE
KONTAKTSCHALTER	3713348M1	1	90 105
		1	90–125
		1	90–130
KONTAKTSCHALTER	3713669M2	1	70 20
		1	70–25
KONTAKTSCHALTER	3714137M1	3	90–10
		3	90 15
		3	90–20
		3	90–25
		1	90–45
KONTAKTSCHALTER	3714138M1	3	90–10
		3	90–15
		3	90–20
		3	90 25
KONTAKTSCHALTER	3715822M4	1	70–20
KONTAKTSCHALTER	3777568M2	1	90 10
		1	90 15
		1	90–20
		1	90–25
KONTAKTSCHALTER	3778375M2	1	20 95
KONTAKTSCHALTER	3778391M1	1	120–40
		1	120 45
		1	120 50
		1	120–55
		1	120–60
KONTAKTSCHALTER	3780077M2	1	25 130
		1	25–140
		1	25–150
KONTAKTSCHALTER	3780395M2	1	20 85
		1	30–25
		2	70–175
		2	70 180
		1	80–105
		1	80–110
		1	80–115
		1	80 120
KONTAKTSCHALTER	3780552M1	1	120–40
		1	120–45
		1	120 50
		1	120–55
KONTAKTSCHALTER	3780580M1	1	20–85
		1	20 90
		1	20–95

LAGERVORSCHLAGSTEILE

D8

		Otv	PAGE
KONTAKTSCHALTER	3780581M1	1	**25 105**
		1	**25–110**
		2	**50–50**
		2	**50–55**
		1	**50 60**
		X	**50–60**
KONTAKTSCHALTER	3782108M1	1	**25–130**
		1	**25 140**
KONTAKTSCHALTER	3783086M1	1	**50–120**
KONTAKTSCHALTER	3783832M1	1	**20 90**
		1	**20–95**
KONTAKTSCHALTER	3792196M1	1	**25–75**
		1	**25 80**
		1	**30–20**
KONTAKTSCHALTER	3902860M1	1	**25–145**
		1	**25 155**
KUEHLERDECKEL	180224M92	1	**10–195**
KUPPLST.AUSSEN	3792559M1	1	**70–390**
		1	**70 395**
		1	**70–400**
		1	**70–405**
KUPPLST.AUSSEN	3792561M1	1	**70 390**
		1	**70–395**
		1	**70–400**
		1	**70 405**
KUPPLST.AUSSEN	3792562M1	1	**70–395**
		1	**70–400**
		1	**70 405**
KUPPLST.AUSSEN	3792563M1	1	**70–400**
		1	**70–405**
KUPPLST.INNEN	1026700M91	4	**70 390**
		6	**70–395**
		8	**70–400**
KUPPLST.INNEN	3583932M1	4	**70 390**
		6	**70–395**
		8	**70–400**
KUPPLUNGSBOLZEN	3716103M2	1	**40 125**
		1	**40–130**
		1	**40–135**
		1	**40–140**
		1	**40 145**
KUPPLUNGSBOLZEN	3793419M2	1	**40–115**
LEUCHTE	3713911M92	2	**120 25**
LEUCHTE	3714184M92	2	**120–5**
		2	**120–10**
LEUCHTE	3714185M91	2	**120 10**

		Otv	PAGE
LEUCHTE	3778456M92	2	**120 60**
LUFTF.EINSATZ	3901477M1	1	**10–265**
LUFTF.EINSATZ	3901478M1	1	**10 265**
MAGNETSPULE	3619763M1	2	**20–75**
		2	**20–80**
		1	**25 75**
		1	**25 80**
		1	**30–60**
		1	**30–65**
		2	**70 65**
		3	**70–75**
MAGNETSPULE	3779284M91	4	**25–160**
		5	**25 165**
O–RING	1001833M1	1	**70–50**
O–RING	1007240M1	2	**70–50**
OELFILTER	1447048M1	2	**10–125**
POTENTIOMETER	3902946M91	1	**25–145**
		1	**25 155**
POTENTIOMETER	3903312M91	1	**25–135**
		1	**25–145**
RELAIS	3387326M2	1	**80 30**
		X	**120–40**
		2	**120–50**
		1	**120 55**
RELAIS	3615652M1	1	**25–110**
		1	**50–120**
		1	**80 30**
		2	**80–30**
		X	**120–40**
		X	**120–45**
		3	**120 55**
		1	**120–60**
RELAIS	3618239M1	1	**25–110**
RELAIS	3779879M1	1	**80–30**
		1	**80–35**
RIEMEN	3386214M1	1	**10 185**
RIEMENSATZ	3617180M91	1	**10–5**
		1	**10–10**
		1	**10 15**
RUECKF.SCHEINW.	5015731M91	2	**120–20**
SCHALTER	3370427M91	1	**80–30**
SCHALTER	3712201M1	1	**10–180**
SCHEINWERFER	3714399M92	2	**120–5**
		6	**120 60**
SCHLAUCH	3780230M1	1	**10–195**
SCHLAUCH	3780508M3	1	**10 195**

		Otv	PAGE
SCHLUESSEL–SATZ	3902584M91	1	**110 10**
SCHNEIDRING	376524X1	1	**10–105**
		1	**10–115**
		1	**10 140**
		1	**10–145**
		5	**10–145**
SCHNEIDRING	376525X1	1	**10 75**
SENSOR GESCHWIN.	3583287M2	1	**25–5**
		1	**90–40**
SENSOR GESCHWIN.	3618249M1	1	**25 75**
		1	**25–80**
		1	**90–115**
		1	**90 120**
SENSOR GESCHWIN.	3712058M1	1	**90–40**
SENSOR GESCHWIN.	3712728M3	1	**40–5**
SENSOR GESCHWIN.	3790881M1	1	**90–40**
SENSOR MOTORDREH	3779280M1	1	**25–160**
		1	**25 165**
SENSOR ZAPFWDREH	3716042M1	1	**90–40**
SENSOR.	3782556M1	1	**25 120**
SICHERUNG	1695939M1	3	**80–65**
		3	**80–70**
SICHERUNG	1695966M1	6	**80 65**
		7	**80–70**
		1	**90–155**
SICHERUNG	3387318M1	1	**10 180**
		1	**50–120**
		X	**80–50**
		1	**80 60**
		1	**90 45**
SICHERUNG	3387319M1	1	**80–40**
		X	**80 50**
		X	**80 55**
		4	**80–60**
		3	**80–65**
		3	**80 70**
SICHERUNG	3387322M1	X	**80–50**
		X	**80–55**
		4	**80 60**
		3	**80–65**
		3	**80–70**

		Otv	PAGE
SICHERUNG	3580868M1	1	**80 50**
		1	**80–55**
		2	**80–60**
		2	**80–65**
		3	**80 70**
		1	**90–10**
		1	**90–15**
		1	**90–20**
		1	**90 25**
SICHERUNG	3620025M1	X	**80–50**
		X	**80–55**
		4	**80 60**
SICHERUNG	3620026M1	1	**80–40**
		1	**80–45**
		X	**80 50**
		X	**80–55**
		15	**80–60**
SICHERUNG	3712661M1	X	**80 50**
		X	**80–55**
		4	**80–60**
		6	**80 65**
		4	**80 70**
		1	**110–225**
		1	**110–230**
SICHERUNG	3780003M1	1	**80 60**
		1	**80–70**
SPEZIALMUTTER	3384600M2	1	**30 20**
		24	**130 55**
		24	**130–60**
		24	**130–65**
		16	**130 75**
SPEZIALMUTTER	3712611M2	20	**130–10**
		20	**130–15**
		20	**130 20**
		20	**130–25**
		20	**130–70**
STECKER	3760032M1	1	**110 225**
STEHBOLZEN	3384601M4	16	**30–35**
		16	**30–40**
		16	**30 45**
STEHBOLZEN	3384602M4	16	**30–35**
		16	**30–40**
		16	**30 45**

LAGERVORSCHLAGSTEILE

D9

		Otv	PAGE
STEUERSCHIEBER	3619762M1	1	**20 75**
		1	**20–80**
		1	**25–75**
		1	**25–80**
		1	**30 60**
		1	**30–65**
		1	**50–75**
		1	**50–80**
		2	**70 65**
		3	**70–75**
STEUERSCHIEBER	3619824M1	1	**20–75**
		1	**20 80**
THERMOKONTAKT	3790121M1	1	**70–50**
		1	**70–115**
		1	**70 120**
UEBERDR.VENTIL	3779244M91	1	**25–165**
		1	**25–170**
UEBERTRAGER	3777157M2	1	**20–90**
		1	**20–95**
UEBERTRAGER	3779237M1	1	**25 165**
UEBERTRAGER	72502305	1	**80–35**
VORWAERMER	3583543M2	1	**10 90**
		2	**10 95**
WERKZEUG	3813582M1	1	**100–5**
WISCHERBLATT	3713195M1	1	**110 195**
ZUENDSCHLUESSEL	3813361M1	1	**80–30**

Otv	PAGE

Otv	PAGE

Otv	PAGE

PEZZI CHE RECCOMANDIANO DI TENERE A MAGAZZINO

D10

		Otv	PAGE
ANELLO OR	1001833M1	1	70 50
ANELLO OR	1007240M1	2	70–50
ATTREZZO	3813582M1	1	100 5
BULBO	3405180M1	1	120–65
BULBO	3713341M1	2	120–40
		2	120 45
BULBO	71129920	1	80–130
BULBO	72505208	26	80 25
BULBO 12V 1,2W	3302213M1	1	110–225
BULBO 12V 1,2W	3405185M1	1	80–5
		33	80 10
		33	80–15
		33	80–20
		1	80 30
		1	110–230
BULBO 12V 10W	3002706X1	1	120–15
		1	120 25
BULBO 12V 10W	3385821M1	2	80–105
		2	80–110
		2	80 115
		2	80 120
BULBO 12V 5W	1420037M1	1	120–5
		1	120 10
BULBO 12V 5W	963333M1	1	110–220
BULBO 21/5W	908543M1	1	120–20
		1	120 25
BULBO 21W LATER.	621235M1	1	120–5
		1	120–10
		2	120 15
		1	120–20
		1	120–25
BULBO 45/40W HL	961866M1	1	120 5
		1	120–10
BULBO E LAMPADA	70928348	1	120–50
BULBO H3	1628494M1	1	120–5
		4	120–40
		1	120–40
		2	120 45
		1	120–50
		2	120–50
		1	120–55
		2	120 60
CAVO DE GANCHIO	3715975M3	1	40–185
		1	40–190
CHIAVE CONTATTO	3813361M1	1	80–30
CINGHIA	3386214M1	1	10–185

		Otv	PAGE
COLINO	3712404M1	1	20 45
COLINO	3714453M1	1	70–45
COLINO	3716334M1	1	70 140
COLINO	3790002M1	1	70–45
DADO SPECIALE	3384600M2	1	30–20
		24	130 55
		24	130–60
		24	130–65
		16	130–75
DADO SPECIALE	3712611M2	20	130–10
		20	130–15
		20	130–20
		20	130 25
		20	130–70
DIODO	1897312M1	1	25–110
		1	90 95
		1	90–110
DIODO	3777531M1	2	80–50
		2	80 55
		2	80–60
		2	80–65
		2	80 70
ELEM FILTRO ARIA	3901477M1	1	10–265
ELEM FILTRO ARIA	3901478M1	1	10–265
ELEM.CARBURANTE	836218M91	1	10–155
ELEMENTO FILTRAN	3618662M1	1	70–55
		1	70 60
		1	70–115
		1	70–120
		1	70–140
ELEMENTO FILTRAN	3780299M1	1	10–245
ELEMENTO FILTRAN	3780931M1	1	10–245
ELEMENTO FILTRAN	3792287M1	1	20 70
ELETTROVALVOLA	3791106M1	1	30–20
ELETTROVALVOLA	3792468M2	2	20 80
EMITTENTE	1877731M92	1	80–35
EMITTENTE	5015257M1	1	80 35
EMITTENTE	72512518	1	80–35
FARO	3713911M92	2	120–25
FARO	3714184M92	2	120–5
		2	120–10
FARO	3714185M91	2	120 10
FARO	3778456M92	2	120–60
FILTRO	3712495M1	1	10 185
FILTRO	3792285M91	1	20–70

		Otv	PAGE
FILTRO CABINA	3388840M2	1	110 45
		1	110–125
FILTRO CABINA	3389746M1	1	110–45
		1	110 125
FILTRO OLIO	1447048M1	2	10–125
FUSIBILE	1695939M1	3	80 65
		3	80 70
FUSIBILE	1695966M1	6	80–65
		7	80–70
		1	90 155
FUSIBILE	3387318M1	1	10–180
		1	50–120
		X	80 50
		1	80–60
		1	90–45
FUSIBILE	3387319M1	1	80 40
		X	80–50
		X	80–55
		4	80 60
		3	80 65
		3	80–70
FUSIBILE	3387322M1	X	80 50
		X	80 55
		4	80–60
		3	80–65
		3	80 70
FUSIBILE	3580868M1	1	80–50
		1	80–55
		2	80 60
		2	80–65
		3	80–70
		1	90–10
		1	90 15
		1	90–20
		1	90–25
FUSIBILE	3620025M1	X	80 50
		X	80–55
		4	80–60
FUSIBILE	3620026M1	1	80 40
		1	80–45
		X	80–50
		X	80–55
		15	80 60

		Otv	PAGE
FUSIBILE	3712661M1	X	80 50
		X	80–55
		4	80–60
		6	80–65
		4	80 70
		1	110–225
		1	110–230
FUSIBILE	3780003M1	1	80 60
		1	80–70
GIUNTO FEMMINA	3792559M1	1	70–390
		1	70 395
		1	70–400
		1	70–405
GIUNTO FEMMINA	3792561M1	1	70 390
		1	70–395
		1	70–400
		1	70–405
GIUNTO FEMMINA	3792562M1	1	70–395
		1	70–400
		1	70–405
GIUNTO FEMMINA	3792563M1	1	70–400
		1	70–405
GIUNTO MASCHIO	1026700M91	4	70 390
		6	70–395
		8	70–400
GIUNTO MASCHIO	3583932M1	4	70 390
		6	70–395
		8	70–400
INDICATORE	3618663M3	1	70 55
		1	70–60
		1	70–115
		1	70–120
INTERRUTTORE	3370427M91	1	80–30
INTERRUTTORE	3712201M1	1	10–180
INTERRUTTORE IND	3616429M1	1	110 175
		1	110–180
INTERRUTTORE IND	3619445M1	1	50–30
INTERRUTTORE IND	3712668M2	1	70–55
		1	70–60
		1	70–115
		1	70 120
INTERRUTTORE IND	3713142M2	1	80–30
INTERRUTTORE IND	3713145M1	1	80 130
INTERRUTTORE IND	3713146M1	1	110–165
		1	120–65
INTERRUTTORE IND	3713147M1	1	110 195

PEZZI CHE RECCOMANDIANO DI TENERE A MAGAZZINO

		Otv	PAGE
INTERRUTTORE IND	3713149M2	1	80 30
INTERRUTTORE IND	3713348M1	1	90–105
		1	90–125
		1	90 130
INTERRUTTORE IND	3713669M2	1	70–20
		1	70–25
INTERRUTTORE IND	3714137M1	3	90 10
		3	90–15
		3	90–20
		3	90 25
		1	90–45
INTERRUTTORE IND	3714138M1	3	90–10
		3	90 15
		3	90–20
		3	90–25
INTERRUTTORE IND	3715822M4	1	70 20
INTERRUTTORE IND	3777568M2	1	90–10
		1	90–15
		1	90 20
		1	90 25
INTERRUTTORE IND	3778375M2	1	20–95
INTERRUTTORE IND	3778391M1	1	120 40
		1	120–45
		1	120–50
		1	120 55
		1	120 60
INTERRUTTORE IND	3780077M2	1	25–130
		1	25 140
		1	25 150
INTERRUTTORE IND	3780395M2	1	20–85
		1	30 25
		2	70 175
		2	70–180
		1	80–105
		1	80 110
		1	80–115
		1	80–120
INTERRUTTORE IND	3780552M1	1	120 40
		1	120–45
		1	120–50
		1	120–55
INTERRUTTORE IND	3780580M1	1	20–85
		1	20–90
		1	20–95

		Otv	PAGE
INTERRUTTORE IND	3780581M1	1	25 105
		1	25–110
		2	50–50
		2	50–55
		1	50 60
		X	50–60
INTERRUTTORE IND	3782108M1	1	25–130
		1	25 140
INTERRUTTORE IND	3783086M1	1	50–120
INTERRUTTORE IND	3783832M1	1	20 90
		1	20–95
INTERRUTTORE IND	3792196M1	1	25–75
		1	25 80
		1	30–20
INTERRUTTORE IND	3902860M1	1	25–145
		1	25 155
INTERRUTTORE PRE	1877721M92	1	80–35
INTERRUTTORE PRE	3808462M1	1	10–255
		1	10 260
KIT CHIAVE	3902584M91	1	110–10
KIT CINGHIA	3617180M91	1	10 5
		1	10–10
		1	10–15
KIT GIUNTO	3792639M1	1	70 320
		1	70–360
		1	70–370
KIT GUARN/GIUNTO	4223732M91	1	10 160
LAMPADA	5015739M91	2	120–50
LAMPADINA	3714399M92	2	120 5
		6	120 60
LUCE POSTERIORE	5015731M91	2	120–20
OLIVA	376524X1	1	10 105
		1	10–115
		1	10–140
		1	10 145
		5	10 145
OLIVA	376525X1	1	10–75
PERNO ATTACCO	3716103M2	1	40 125
		1	40–130
		1	40–135
		1	40–140
		1	40 145
PERNO ATTACCO	3793419M2	1	40–115
POTENZIOMETRO	3902946M91	1	25 145
		1	25–155

		Otv	PAGE
POTENZIOMETRO	3903312M91	1	25 135
		1	25–145
PRESA PRESSIONE	3384387M1	1	20–75
		5	20 80
		1	70–55
		2	70–55
		1	70–60
		2	70 60
		1	70–110
		1	70–115
		1	70–120
		2	70 130
		1	70–205
		1	70–215
		1	70 220
PRESA.	3713764M1	2	40–35
		2	40–40
		2	40 45
PRESAELETTRICITA	3760032M1	1	110–225
PRIGIONIERO	3384601M4	16	30–35
		16	30 40
		16	30–45
PRIGIONIERO	3384602M4	16	30–35
		16	30 40
		16	30–45
RELE	3387326M2	1	80–30
		X	120 40
		2	120–50
		1	120–55
RELE	3615652M1	1	25 110
		1	50–120
		1	80–30
		2	80 30
		X	120 40
		X	120–45
		3	120–55
		1	120 60
RELE	3618239M1	1	25–110
RELE	3779879M1	1	80–30
		1	80 35

		Otv	PAGE
ROCCHETTO	3619762M1	1	20 75
		1	20–80
		1	25–75
		1	25–80
		1	30 60
		1	30–65
		1	50–75
		1	50–80
		2	70 65
		3	70–75
ROCCHETTO	3619824M1	1	20–75
		1	20 80
ROTULA	3042427M1	2	40–40
		2	40–45
ROTULA	3042428M1	2	40–40
		2	40–45
ROTULA	3042430M1	2	40 40
		2	40–45
ROTULA	3042431M1	2	40–40
		2	40 45
ROTULA	3042433M1	1	40–25
ROTULA	3104945M1	1	60 40
ROTULA	3764286M1	2	60–70
ROTULA	3782685M1	2	40–195
ROTULA	3782686M1	2	40–195
ROTULA	3791537M1	1	40–20
ROTULA	3900885M1	1	40 195
SENSORE	3782556M1	1	25–120
SENSORE GIRI PTO	3716042M1	1	90 40
SENSORE GIRIMOTO	3779280M1	1	25–160
		1	25–165
SENSORE INDUTTIV	3583287M2	1	25–5
		1	90–40
SENSORE INDUTTIV	3618249M1	1	25 75
		1	25–80
		1	90–115
		1	90–120
SENSORE INDUTTIV	3712058M1	1	90–40
SENSORE INDUTTIV	3712728M3	1	40–5
SENSORE INDUTTIV	3790881M1	1	90 40
SENSORE PRESS.	3381387M4	1	25–165
		1	70–50
		1	70 115
		1	70–120

PEZZI CHE RECCOMANDIANO DI TENERE A MAGAZZINO

		Otv	PAGE
SOLENOIDE	3619763M1	2	**20 75**
		2	**20–80**
		1	**25–75**
		1	**25–80**
		1	**30 60**
		1	**30–65**
		2	**70–65**
		3	**70–75**
SOLENOIDE	3779284M91	4	**25–160**
		5	**25–165**
SPAZZOLA TERGICR	3713195M1	1	**110 195**
TAPPO RADIATORE	180224M92	1	**10–195**
TERMASTO CONTAT	3790121M1	1	**70 50**
		1	**70–115**
		1	**70–120**
TERMOSTARTER	3583543M2	1	**10 90**
		2	**10 95**
TRASMETTITORE	3777157M2	1	**20–90**
		1	**20 95**
TRASMETTITORE	3779237M1	1	**25–165**
TRASMETTITORE	72502305	1	**80–35**
TUBO FLESSIBILE	3780230M1	1	**10–195**
TUBO FLESSIBILE	3780508M3	1	**10–195**
VALVOLA LIMITATR	3779244M91	1	**25 165**
		1	**25–170**
VALVOLA PRESSION	3581307M2	1	**70 80**
		1	**70 85**
		1	**70–125**
VALVOLA PRESSION	3779283M91	1	**25 160**

Otv	PAGE

Otv	PAGE

Otv	PAGE

RECAMBIO QUE SE RECOMIENDA MANTENER EN STOCK

		Otv	PAGE
ACOPLADOR HEMBRA	3792559M1	1	70 390
		1	70–395
		1	70–400
		1	70–405
ACOPLADOR HEMBRA	3792561M1	1	70–390
		1	70–395
		1	70–400
		1	70 405
ACOPLADOR HEMBRA	3792562M1	1	70–395
		1	70–400
		1	70 405
ACOPLADOR HEMBRA	3792563M1	1	70–400
		1	70–405
ACOPLADOR MACHO	1026700M91	4	70–390
		6	70–395
		8	70–400
ACOPLADOR MACHO	3583932M1	4	70 390
		6	70–395
		8	70–400
ALUMBRADO	3713911M92	2	120 25
ALUMBRADO	3714184M92	2	120–5
		2	120 10
ALUMBRADO	3714185M91	2	120–10
ALUMBRADO	3778456M92	2	120–60
BOMB C/I 21/5W	908543M1	1	120–20
		1	120–25
BOMB COSTADO21W	621235M1	1	120 5
		1	120–10
		2	120–15
		1	120–20
		1	120 25
BOMB LAMP.PILOTO	70928348	1	120–50
BOMBFARO 45/40W	961866M1	1	120 5
		1	120–10
BOMBILLA 12V 10W	3002706X1	1	120–15
		1	120 25
BOMBILLA 12V 10W	3385821M1	2	80–105
		2	80–110
		2	80 115
		2	80–120
BOMBILLA 12V 5W	1420037M1	1	120–5
		1	120 10
BOMBILLA 12V 5W	963333M1	1	110–220
BOMBILLA 12V1,2W	3302213M1	1	110–225

		Otv	PAGE
BOMBILLA 12V1,2W	3405185M1	1	80 5
		33	80–10
		33	80–15
		33	80–20
		1	80 30
		1	110–230
BOMBILLA H3	1628494M1	1	120–5
		4	120 40
		1	120–40
		2	120–45
		1	120–50
		2	120 50
		1	120–55
		2	120–60
CABLE DE GANCHO	3715975M3	1	40 185
		1	40–190
CALENTADOR ADM	3583543M2	1	10–90
		2	10 95
CAPTADOR INDUCT.	3583287M2	1	25–5
		1	90–40
CAPTADOR INDUCT.	3618249M1	1	25–75
		1	25–80
		1	90–115
		1	90 120
CAPTADOR INDUCT.	3712058M1	1	90–40
CAPTADOR INDUCT.	3712728M3	1	40 5
CAPTADOR INDUCT.	3790881M1	1	90–40
CARRETE	3619762M1	1	20 75
		1	20 80
		1	25–75
		1	25–80
		1	30 60
		1	30–65
		1	50–75
		1	50–80
		2	70 65
		3	70–75
CARRETE	3619824M1	1	20–75
		1	20 80
COLADOR	3712404M1	1	20–45
COLADOR	3714453M1	1	70 45
COLADOR	3716334M1	1	70–140
COLADOR	3790002M1	1	70–45
CONTACTOR	3616429M1	1	110–175
		1	110–180
CONTACTOR	3619445M1	1	50 30

		Otv	PAGE
CONTACTOR	3712668M2	1	70 55
		1	70–60
		1	70–115
		1	70–120
CONTACTOR	3713142M2	1	80–30
CONTACTOR	3713145M1	1	80–130
CONTACTOR	3713146M1	1	110 165
		1	120–65
CONTACTOR	3713147M1	1	110–195
CONTACTOR	3713149M2	1	80–30
CONTACTOR	3713348M1	1	90–105
		1	90 125
		1	90–130
CONTACTOR	3713669M2	1	70–20
		1	70 25
CONTACTOR	3714137M1	3	90–10
		3	90–15
		3	90 20
		3	90–25
		1	90–45
CONTACTOR	3714138M1	3	90 10
		3	90–15
		3	90–20
		3	90–25
CONTACTOR	3715822M4	1	70–20
CONTACTOR	3777568M2	1	90–10
		1	90 15
		1	90–20
		1	90–25
CONTACTOR	3778375M2	1	20 95
CONTACTOR	3778391M1	1	120–40
		1	120–45
		1	120 50
		1	120–55
		1	120–60
CONTACTOR	3780077M2	1	25 130
		1	25–140
		1	25–150
CONTACTOR	3780395M2	1	20 85
		1	30–25
		2	70–175
		2	70–180
		1	80 105
		1	80–110
		1	80–115
		1	80–120

		Otv	PAGE
CONTACTOR	3780552M1	1	120 40
		1	120–45
		1	120–50
		1	120–55
CONTACTOR	3780580M1	1	20–85
		1	20–90
		1	20–95
CONTACTOR	3780581M1	1	25–105
		1	25–110
		2	50–50
		2	50 55
		1	50–60
		X	50–60
CONTACTOR	3782108M1	1	25 130
		1	25–140
CONTACTOR	3783086M1	1	50–120
CONTACTOR	3783832M1	1	20 90
		1	20–95
CONTACTOR	3792196M1	1	25 75
		1	25 80
		1	30–20
CONTACTOR	3902860M1	1	25 145
		1	25 155
CORREA	3386214M1	1	10–185
CORREAS JUEGO	3617180M91	1	10 5
		1	10–10
		1	10–15
DETECTOR	3782556M1	1	25 120
DIODO	1897312M1	1	25–110
		1	90–95
		1	90 110
DIODO	3777531M1	2	80–50
		2	80–55
		2	80 60
		2	80–65
		2	80–70
ELECTROVALVULA	3791106M1	1	30 20
ELECTROVALVULA	3792468M2	2	20–80
ELEMENTO GASOLEO	836218M91	1	10 155
EMISOR	1877731M92	1	80–35
EMISOR	5015257M1	1	80–35
EMISOR	72512518	1	80–35

RECAMBIO QUE SE RECOMIENDA MANTENER EN STOCK

D14

		Otv	PAGE
ENTRADA PRESION	3384387M1	1	20 75
		5	20–80
		1	70–55
		2	70–55
		1	70 60
		2	70–60
		1	70–110
		1	70–115
		1	70 120
		2	70–130
		1	70–205
		1	70 215
		1	70–220
ESCOBILLA L P BR	3713195M1	1	110–195
ESPARRAGO	3384601M4	16	30 35
		16	30–40
		16	30–45
ESPARRAGO	3384602M4	16	30 35
		16	30–40
		16	30–45
FARO	3714399M92	2	120 5
		6	120–60
FARO DELANTERO	5015739M91	2	120–50
FILTRO	3712495M1	1	10–185
FILTRO	3792285M91	1	20–70
FILTRO AIRE	3901477M1	1	10 265
FILTRO AIRE	3901478M1	1	10–265
FILTRO CABINA	3388840M2	1	110 45
		1	110–125
FILTRO CABINA	3389746M1	1	110–45
		1	110 125
FILTRO DE ACEITE	1447048M1	2	10–125
FLEXIBLE	3780230M1	1	10 195
FLEXIBLE	3780508M3	1	10–195
FUSIBLE	1695939M1	3	80 65
		3	80 70
FUSIBLE	1695966M1	6	80–65
		7	80–70
		1	90 155
FUSIBLE	3387318M1	1	10–180
		1	50–120
		X	80 50
		1	80–60
		1	90–45

		Otv	PAGE
FUSIBLE	3387319M1	1	80 40
		X	80–50
		X	80–55
		4	80–60
		3	80 65
		3	80–70
FUSIBLE	3387322M1	X	80–50
		X	80 55
		4	80–60
		3	80–65
		3	80–70
FUSIBLE	3580868M1	1	80–50
		1	80–55
		2	80–60
		2	80 65
		3	80–70
		1	90–10
		1	90 15
		1	90 20
		1	90–25
FUSIBLE	3620025M1	X	80 50
		X	80 55
		4	80–60
FUSIBLE	3620026M1	1	80 40
		1	80 45
		X	80–50
		X	80–55
		15	80 60
FUSIBLE	3712661M1	X	80–50
		X	80–55
		4	80 60
		6	80–65
		4	80–70
		1	110–225
		1	110 230
FUSIBLE	3780003M1	1	80–60
		1	80–70
HERRAMIENTA	3813582M1	1	100–5
INDICADOR	3618663M3	1	70–55
		1	70 60
		1	70–115
		1	70–120
INTERRUP PRESION	1877721M92	1	80 35
INTERRUP PRESION	3808462M1	1	10–255
		1	10–260
INTERRUPTOR	3370427M91	1	80 30

		Otv	PAGE
INTERRUPTOR	3712201M1	1	10 180
JGO.JUNTAS/EMPAQ	4223732M91	1	10–160
JUEGO ALICATES	3902584M91	1	110 10
JUEGO JUNTAS	3792639M1	1	70–320
		1	70–360
		1	70 370
JUNTA TORICA	1001833M1	1	70–50
JUNTA TORICA	1007240M1	2	70–50
LAMPARA	3405180M1	1	120–65
LAMPARA	3713341M1	2	120–40
		2	120 45
LAMPARA	71129920	1	80–130
LAMPARA	72505208	26	80–25
LLAVE CONTACTO	3813361M1	1	80–30
LUZ TRASERA	5015731M91	2	120–20
OLIVA	376524X1	1	10–105
		1	10–115
		1	10–140
		1	10 145
		5	10–145
OLIVA	376525X1	1	10–75
PASADOR ENGAN.	3716103M2	1	40 125
		1	40–130
		1	40–135
		1	40 140
		1	40–145
PASADOR ENGAN.	3793419M2	1	40–115
PERNO ENGANCHE	3042427M1	2	40 40
		2	40–45
PERNO ENGANCHE	3042428M1	2	40 40
		2	40 45
PERNO ENGANCHE	3042430M1	2	40–40
		2	40 45
PERNO ENGANCHE	3042431M1	2	40–40
		2	40–45
PERNO ENGANCHE	3042433M1	1	40 25
PERNO ENGANCHE	3104945M1	1	60–40
PERNO ENGANCHE	3764286M1	2	60 70
PERNO ENGANCHE	3782685M1	2	40–195
PERNO ENGANCHE	3782686M1	2	40–195
PERNO ENGANCHE	3791537M1	1	40–20
PERNO ENGANCHE	3900885M1	1	40–195
REGULADOR ELECT.	3902946M91	1	25–145
		1	25–155
REGULADOR ELECT.	3903312M91	1	25 135
		1	25–145

		Otv	PAGE
RELE	3387326M2	1	80 30
		X	120–40
		2	120–50
		1	120–55
RELE	3615652M1	1	25–110
		1	50–120
		1	80–30
		2	80 30
		X	120–40
		X	120–45
		3	120–55
		1	120 60
RELE	3618239M1	1	25–110
RELE	3779879M1	1	80 30
		1	80–35
SENSOR VEL.MOTOR	3779280M1	1	25–160
		1	25 165
SENSOR VEL.TDF	3716042M1	1	90–40
SOLENOIDE	3619763M1	2	20 75
		2	20 80
		1	25–75
		1	25–80
		1	30 60
		1	30–65
		2	70–65
		3	70–75
SOLENOIDE	3779284M91	4	25–160
		5	25–165
SUPLEMENT FILTRO	3618662M1	1	70 55
		1	70–60
		1	70–115
		1	70–120
		1	70 140
SUPLEMENT FILTRO	3780299M1	1	10–245
SUPLEMENT FILTRO	3780931M1	1	10 245
SUPLEMENT FILTRO	3792287M1	1	20–70
TAPON RADIADOR	180224M92	1	10–195
TERMOSTA CONTACT	3790121M1	1	70–50
		1	70–115
		1	70–120
TOMA	3713764M1	2	40–35
		2	40–40
		2	40–45
TOMACORRIENTE	3760032M1	1	110–225

RECAMBIO QUE SE RECOMIENDA MANTENER EN STOCK

D15

		Otv	PAGE
TRANS.ACEITE BP	3381387M4	1	**25 165**
		1	**70–50**
		1	**70–115**
		1	**70–120**
TRANSMISOR	3777157M2	1	**20–90**
		1	**20–95**
TRANSMISOR	3779237M1	1	**25 165**
TRANSMISOR	72502305	1	**80–35**
TUERCA ESPECIAL	3384600M2	1	**30–20**
		24	**130 55**
		24	**130–60**
		24	**130–65**
		16	**130 75**
TUERCA ESPECIAL	3712611M2	20	**130–10**
		20	**130–15**
		20	**130 20**
		20	**130 25**
		20	**130–70**
VALV.DESCARG	3779244M91	1	**25 165**
		1	**25 170**
VALVULA PRESION	3581307M2	1	**70–80**
		1	**70 85**
		1	**70 125**
VALVULA PRESION	3779283M91	1	**25–160**

Otv	PAGE

Otv	PAGE

Otv	PAGE

RESERVED

NUMERICAL INDEX
INDEX NUMERIQUE
NUMMERN–INDEX
INDICE NUMERICO
INDICE NUMERICO

G1

1001465M1 **25 75**
25 80
1001489M1 **20 65**
70 45
1001833M1 **70 50**
1006234M1 **70 140**
1006335M1 **25–75**
25–80
1007240M1 **70 50**
1026700M91 **70 390**
70 395
70 400
11298X **70 110**
11940X **10 55**
1420037M1 **120–5**
120–10
1426515M1 **50 40**
1427000M1 **90 50**
110 55
110 60
115 15
1427873M1 **110 165**
110–170
1429153M1 **70–30**
1429154M1 **70 30**
1429155M1 **70 30**
1429157M91 **70 30**
1440011X1 **25 15**
50 25
1440012X1 **90 115**
90–120
1440022X1 **10–270**
10 275
10 280
10 285
110 295
120 40
120 45
1440029X1 **70–110**
1440207X1 **90–65**
90 70
90 75
1440231X1 **130 10**
130 15
130 40
1440264X1 **10 255**
10–260

1440329X1 **10 185**
10 205
10 215
25 120
40 170
1440330X1 **10 305**
40–30
1440349X1 **20–35**
20 40
25 25
40 205
50 105
110 255
110 265
1440350X1 **10–300**
20–45
30 15
50 40
50 105
1440351X1 **70 55**
70 60
70 115
70–120
1440352X1 **70–110**
1440354X1 **70 50**
1440356X1 **70 110**
70 140
1440360X1 **70 45**
1440389X1 **25 70**
1440394X1 **30 15**
1440396X1 **110–20**
1440475X1 **70–15**
1440480X1 **60 50**
70 110
1440516X1 **50 95**
1440528X1 **25 10**
25 20
1440533X1 **60 50**
1440716X1 **10–25**
1440819X1 **60–50**
1440827X1 **120 15**
1440848X1 **60 40**
1440860X1 **10 210**
10 220
10 270
10 275
1440872X1 **70–15**

1440921X1 **70 5**
70 10
1440922X1 **60 65**
70 415
70 420
70 425
70–430
70–435
70 440
70 445
70 450
70 455
70 460
100 15
100–20
1440961X1 **50–25**
1440988X1 **30 25**
110 25
1441000X1 **30 55**
110 250
110 255
110 260
110–265
110–280
1441100X1 **120 5**
120 10
1441133X1 **70 380**
70 385
1441163X1 **20 25**
20 30
1441204X1 **110–25**
1441206X1 **25–145**
25 155
80 30
110 270
110 275
120 50
1441226X1 **130 35**
1441247X1 **25–85**
25–95
1441366X1 **50 100**
1441403X1 **60 50**

1441461X1 **10 270**
10 275
10 290
10 295
20 50
20 60
20–65
25–105
25 110
25 115
25 120
40 170
40 185
50 50
50–55
70–415
70 420
70 425
70 430
70 435
70 440
70 445
70–450
70–455
70 460
110 255
110 265
110 270
110 275
1441462X1 **10–250**
20–50
20 60
20 65
25 120
1441494X1 **10 235**
10 240
80 35
110–105

1441500X1 **10 220**
10 250
25 130
25 140
25 150
70 225
70–230
70–235
70 240
70 245
70 415
70 420
70 425
70 430
70–435
70–440
70 445
70 450
70 455
70 460
90 45
90 155
100–65
110–30
110 295
1441521X1 **60 45**
1441590X1 **40 200**
60 5
1441664X1 **40 170**
1441685X1 **60 5**
60–10
1441704X1 **120–40**
1441708X1 **70 45**
1441722X1 **70 45**
70 50
70 115
70 120
1441772X1 **25 65**
25–70
25–75
25 80
1441785X1 **70 50**
70 110
1441835X1 **25 40**
1441858X1 **25 120**
40 5
40–10
60–65

1441885X1 **60 50**
1441917X1 **110 80**
110 85
1441932X1 **10 275**
1441946X1 **70 60**
70 115
1441961X1 **120–10**
1441967X1 **110–40**
1442174X1 **25 105**
25 110
50 50
50 55
1442190X1 **10 270**
10 310
90–35
130–35
1442336X1 **70 80**
70 85
70 125
1442477X1 **70 270**
70 380
70 385
1442486X1 **60–90**
1442487X1 **10–185**
1442492X1 **40 150**
40 155
1442502X1 **50 85**
1442508X91 **40 175**
1442522X1 **70 45**
70 50
1442560X1 **60–80**
1442602X1 **130–35**
1442647X1 **25 90**
1442668X1 **40 65**
40 105
40 110
40 115
40 120
40–125
40–130
40 140
40 200
1442674X1 **90 75**
1442697X1 **50 15**
60 85
1442739X1 **40 105**
40–110
40–120

1442783X1 110 260
1442829X1 25 145
25 155
1442921X1 60 40
1442963X1 110 10
1442981X1 40 10
1442993X1 30–20
1442994X1 20–85
1443615X1 10 165
90 20
1444034X1 70 45
1444071X1 60 85
1444232X1 25 20
1444351X1 10 290
10–295
110–255
110 265
1444488X1 20 25
25 45
25 50
1446894M1 10 155
1447048M1 10 125
1447128M1 10–55
1447207M1 10–55
1447690M1 10 100
1447691M1 10 50
1447752M1 10 100
1476037M1 10 55
1476108X1 10 50
1476145X1 10 100
1476192X1 10–50
10–60
10 125
10 130
1476193X1 10 100
1476243X1 10 60
1476280X1 10 100
1476281X1 10 70
10–120
1476282X1 10–50
1476283M1 10 125
152613M1 30 60
152623M1 50 35
50 40
50 45
1605415M1 60 75
1606575M1 60–45

1610191M1 30 35
30 40
30 45
1610204M2 30 35
30 40
30 45
1610243M2 50–35
1610244M1 50–35
1610254M1 50 65
1610870M4 25 5
1610890M1 25 65
25 70
1610891M1 25 65
25 70
1611168M4 25–15
25–20
25 25
1611277M1 30 50
30 55
30 60
30 65
30 70
1611422M1 30–35
30–40
1611669M1 25 65
25 70
1611670M1 25 65
25 70
1612096M1 130 70
1612097M1 130–70
1612098M2 130–70
1612707M1 50 35
50 40
50 45
1613986M4 20 85
20 100
1614384M1 130 5
1614385M1 130–5
1614882M3 25–40
1617869M2 10 205
10 210
10 215
10 220
1618190M1 40 120
1618225M1 40 120
1618290M1 40–120

1619032M1 20 5
20 10
1619912M1 70 5
70 10
1625198M1 10 270
10 275
1625401M2 80–40
1626321M2 20–85
20 90
20 95
70 175
70 180
1626976M2 30 35
30 40
30–45
1627465M1 20–85
1628494M1 120 5
120 40
120 45
120 50
120 55
120 60
1633270M3 25–65
25–70
1633899M1 40 160
1635883M1 70 30
1635884M91 70 30
1642034M91 20 100
1650388M1 10 50
10 140
10–145
1677803M1 110–185
1678404M1 120 5
120 10
120 50
1680172M1 60 5
60 10

1684844M1 20 90
20 95
70 415
70 420
70 425
70 430
70–435
70–440
70 445
70 450
70 455
70 460
100 45
100 50
1691972M1 110–115
110–120
1691973M1 110 115
110 120
1693965M1 30 25
1693970M1 30 25
1693973M1 30 25
1693974M1 30 25
1693976M1 30–25
1693980M1 30–25
1694047M1 110 130
1694534M1 80 30
1695939M1 80 65
80 70
1695966M1 80 65
80 70
90–155
1696186M93 100–60
1696477M1 110 130
1699748M1 10 300
10 305
10 310
1719857M1 110 285
1719867M1 110 270
110–275
1719891M1 110–260
1719896M1 110 270
110 275
1719900M1 110 260
1719902M1 110 260
1719903M1 110 260
1719910M1 110 260
1719914M1 110–260
1719917M1 110–260

1719918M1 110 260
1719920M1 110 260
1719921M1 110 260
1719923M1 110 260
1719932M1 110 260
1719935M1 110 260
180224M92 10–195
180418M2 25–85
25 90
1806002M1 10 40
1806184M1 70 275
1806303M1 70 30
1806310M1 70 30
1806311M1 70 30
1806312M1 70–30
1806313M1 70–30
1806314M1 70 30
1806315M1 70 30
1806316M1 70 30
1806317M1 70 30
1806318M1 70 30
1806319M1 70 30
1806416M1 70–30
1810503M92 70–30
1810832M91 70 185
1810833M91 70 190
70 195
1823598M1 130 5
1850909M91 30 60
30 70
1851533M91 30–50
1851891M1 10–155
1852568M1 20 35
1866538M2 25 85
25 90
1866539M1 25 85
25 90
1866542M1 25 85
25–90
1866543M1 25–85
25 90
1866544M2 25 85
25 90
1866545M2 25 85
25 90
1866552M1 25 85
25–90

1866553M2 25 85
25 90
1866558M93 25 85
25 90
1872134M92 50 20
50 90
1874535M3 80–30
187689M2 30–60
1877721M92 80 35
1877731M92 80 35
1882958M1 20 20
70 130
70 285
70 295
70–305
70–315
70 325
70 335
70 345
70 355
70 365
70 375
1887719M1 70–30
1887727M1 70–30
1887730M1 70 30
1887967M91 10 40
1890402M1 70 30
1894414M91 70 30
1894415M1 70 30
1896464M1 10 105
1897312M1 25–110
90–95
90 110
1897317M92 10 40
1897432M91 70 30
1897434M1 70 30
1897608M91 70 30
1897696M1 10 30
191124M2 30–60
191125M2 30–60
191221M1 25 65
25 70
25 75
25 80
191314M1 20 15
20 35
20–40
194626M1 10–155

19466X	30 10
195234M1	30 25
195561M1	30 15
195562M1	50 75
	50 80
	70 50
195654M1	20–45
195868M1	50–40
	50 45
195876M1	25 75
	25 80
195960M1	20 50
	20 60
	20 65
	70–105
	70–130
	70 145
	70 150
2191950K91	80 30
2196X	10 55
	10 100
22277X	70 50
22428X	90–90
	110–5
	110 80
	120 5
	120 10
	120 35
22576X	40 175
	70 100
	70–225
	70–240
22608X	40 10
22833X	20 105
	70 100
	70 235
2746135M2	30 50
2746322M1	30 50
274797M1	50–85
2752579M1	100–80
	100 125
293854M1	25 215
3000046X1	40 155
3000052X1	50 25
3000258X1	70 55
	70 60
	70–115
	70–120
3000261X1	110 35
	110 40
3000483X1	10 10
	10 195
	10 200
	110 115
	110–130
	110–155
	110 165
	110 170
3000570X91	60 35
3000705X1	70 45
	70 50
	70 110
3000926X1	110–225
	110–270
	120 30
3001162X1	25 120
	80 105
	80 110
	80 115
	80 120
	90–20
3001189X1	40–150
3001254X1	110 285
3001293X1	25 85
	25 90
3001414X1	110 270
	110 275
3001429X1	40 35
	40–40
	40–45
	40 130
	40 135
	40 140
	40 145
3001725X1	120 25
3001758X1	30 20
3001856X1	80–105
	80–110
	80 115
	80 120
3001915X1	100 30
	100 35
	100 40
	100 55
3001968X1	40–200
	60–10
3002169X1	50 65
	50 70
3002233X1	50 90
3002706X1	120 15
	120 25
3003277X1	50 10
	50–15
3004566X1	25–135
	25 145
	25 155
3004715X1	50 25
3004861X1	70 200
	70 210
3005728X1	10 205
	10–210
	10–215
	10 220
3005823X1	40 205
	40 210
3005888X1	60 40
3006020X1	25 95
	25 100
3006154X1	10–165
3006290X1	50–40
	50 45
3006429X1	40 45
	40 195
3006442X1	50 20
3006465X1	110 35
3006587X1	25 25
3006699X1	120–65
3007077X1	50–90
3007118X1	30 20
3007432X1	70 390
	70 395
	70 400
3007458X1	25 65
	25 75
3007850X1	10–290
	10–295
	10 305
3007920X1	70 165
3007934X1	110 200
3008025X1	20 35
3008120X1	60 80
3008179X1	25 135
	25 145
	25 155
	40 20
	40 25
	110 165
	110–170
3008317X1	40–40
	40 45
	40 195
3008342X1	110 30
3008596X1	25 65
	25 70
3008654X1	30 35
	30–40
3008823X1	60–5
	60 10
3008868X1	60 40
3008914X1	110 190
3009052X1	110 285
3009130X1	10 290
	10 295
	25–115
3009270X1	70–390
	70 395
	70 400
3009280X1	90 40
3009281X1	25 120
	115 5
3009283X1	70 55
	70–60
3009285X1	25–85
	25 115
3009286X1	50 35
3009287X1	10 5
	10 10
	10 15
	20 35
	20–40
3009288X1	10–10
	10 15
3009289X1	20 65
3009292X1	50 35
	50 40
	50 45
	70 380
	70–385
3009293X1	25–100
3009296X1	60 80
3009297X1	70 45
3009299X1	70 115
	70 120
3009300X1	70 45
	70 115
	70–120
3009301X1	30–15
	70 110
3009302X1	70 50
3009303X1	70 50
3009311X1	25 5
3009322X1	110 255
	110 265
3009332X1	70–415
	70–420
	70 425
	70 435
3009336X1	70 425
	70 430
	70 435
	70 440
	70–445
	70–450
	70 455
	70 460
3009351X1	20 35
	20 55
	50 20
	70 140
3009429X1	30–15
3009439X1	110–40
	110 255
	110 265
3009450X1	50 20
3009491X1	100 30
	100 35
	100 45
	100–50
	120–60
3009492X1	10 20
	10 25
	10 195
	40 105
	40 110
	40 115
	40–120
	40–125
	40 130
	40 135
	40 140
	40 145
	100 25
	100 30
	100–35
	100–40
	100 55
3009493X1	60 50
	60 55
	60 65
	100 30
	100 35
	100–40
	100–55
	110 5
	115 5
	130 30
	130 35
3009494X1	10 25
	10 165
	10–185
	25–130
	25 140
	25 150
	70 5
	70 10
	90 20
3009495X1	10 25
3009496X1	130–35
3009497X1	100–15
	100 20
3009498X1	10 185
	10 210
	10 215
	10 275
3009501X1	10 25
3009502X1	10–185
	70–160

3009505X1 10 20
40 195
50 100
3009507X1 25 85
70 410
3009509X1 130 35
3009512X1 60–40
3009513X1 130–30
3009515X1 10 270
30 65
60 40
3009516X1 130 30
3009517X1 70 45
3009518X1 70 45
3009531X1 10–165
25–135
25 145
3009532X1 80 130
3009534X1 25 145
25 155
3009535X1 110 70
120 40
3009538X1 90–85
120–35
3009674X1 25 135
25 145

3009693X1 10 5
10 10
10 15
10 25
10 185
10 215
25–120
25–130
25 140
25 150
70 160
70 415
70 420
70 425
70–430
70–435
70 440
70 445
70 450
70 455
70 460
90 20
100–30
100–35
100 40
100 55
110 245
110 280
130 35
3009695X1 60 40
70–110
130–30
3009696X1 70 430
70 440
70 455
70 460
3009711X1 50 80
50 85
3009746X1 120–40
3009747X1 40–200
3009748X1 25 5
3009805X1 30 5
30 10
3009806X1 30 5
30 10
40 5

3009853X1 50 35
50 40
50 45
3009920X1 10 5
10 10
10 15
25–215
3010003X1 70–415
70 420
70 425
70 430
70 435
70 440
70 445
70–450
70–455
70 460
3010007X1 20 15
25 5
30 5
60 25
60 30
3010008X1 25–5
40–205
60 15
3010010X1 20 15
30 50
30 55
3010021X1 10 195
3010034X91 25 40
50–35
3010040X91 25–40
3010045X1 40 110
40 115
40 120
60 35
3010046X1 60 80
3010058X91 60 35
3010059X1 25–60
3010060X1 25–60
3010065X1 110 175
110 180
3010066X1 40 10
3010067X1 60 35
3010115X91 25 35
3010118X91 25 60
3010127X1 20–30

3010128X1 25 10
25 15
25 20
25 25
25 85
3010138X1 20 30
25–20
3010143X1 20–15
3010144X1 20 35
20 40
3010151X91 25 35
3010153X1 25 15
25 25
3010177X1 150 55
3010182X1 115–5
3010183X1 25–25
3010238X1 50 105
3010239X1 20 10
3010345X1 25 20
3010346X1 25 15
3010347X1 25 10
3010348X1 25 35
3010349X1 20–35
20–40
3010425X1 20 35
20 40
3010426X1 20 35
20 40
3010428X1 60 30
3010434X1 40 35
40–40
40–45
3010445X1 100 10
3010448X1 70 110
3010452X1 20 15
3010460X1 40 195
3010462X1 20 20
20 25
3010463X1 20–20
20–25
3010464X1 20 20
20 25
3010465X1 20 35
20 40
3010466X1 20 35
20 45
20–55

3010467X1 25 120
110 105
110 295
120 40
3010470X1 40 205
3010471X1 10 185
110–115
110–120
3010472X1 10 185
3010473X1 110 115
110 120
3010474X1 10 185
110 115
110 120
3010477X1 10–180
30–25
50 120
70 430
70 440
70 455
70 460
80 30
80–35
80–50
80 55
80 60
80 65
80 70
90 25
90 35
90–75
110–165
110 225
120 5
120 15
120 25
120 35
120 40
120–45
120–50
120 55
3010479X1 25 10
25 15
25 20
25 25
3010481X1 20 75
3010482X1 25–10

3010493X1 20 20
20 25
3010498X1 20 50
20 60
20 65
3010499X1 80 5
80–10
80–15
80 20
3010501X1 20 20
20 25
3010502X1 10 185
110 115
110 120
3010505X1 20–15
3010506X1 70–415
70 420
70 425
70 430
70 435
70 440
70 445
70–450
70–455
70 460
80 45
90 10
90 15
90 20
90 25
90–50
110–55
110 60
110 80
110 85
110 90
110 165
110 170
110–225
110–230
115 10
115 15
3010509X1 25 20
3010546X91 70 35

3010553X1 40 125
40 130
40 135
40 140
40 145
3010554X1 50 35
50–40
50–45
3010555X1 50 40
50 45
3010556X1 30 30
40 150
40 155
3010557X1 30 30
40–125
40–130
40 135
40 140
40 145
3010558X1 30 30
40 35
40 40
40–45
3010559X1 90–10
90 15
90 20
90 25
3010560X1 40 70
40 75
40 80
3010561X1 40–50
40–55
40 60
40 65
40 70
40 130
40 135
40 140
40–145
40–170
3010562X1 40 50
40 55
40 60
40 65
40 70
40 75
40–80
40–170

3010563X1 30 30
3010565X1 30 35
3010566X1 40 5
3010570X1 60 10
3010572X1 10 270
10 275
10–280
10–285
120 55
3010575X1 30 30
3010578X1 25 130
25 140
25 150
90 50
110–80
110–85
110 90
110 225
115 10
120 5
3010594X1 110 65
110 70
3010597X1 110–30
110–70
110 75
120 55
3010599X1 25 145
25 155
90 35
3010600X1 90 35
3010612X1 50–85
3010624X1 50–35
50 40
50 45
3010630X1 25 5
3010631X1 40 50
40 55
40 60
3010633X1 60–25
3010640X1 20–30
25 60
25 85
25 90
3010663X1 30 20
3010664X1 60 55
3010670X1 80 140
3010683X1 110–115
3010691X91 25–60

3010697X91 60 50
3010709X1 70 115
70 120
3010714X91 30 55
3010720X91 30 50
30 55
3010726X91 30–65
3010733X1 10–280
10 285
3010735X91 30 50
30 55
3010740X1 30 15
3010741X1 25 85
3010742X1 120 45
3010750X1 25–85
3010754X1 110–70
3010755X1 60 25
3010760X1 30 30
3010761X1 30 20
3010762X1 110 190
3010767X1 50 20
3010769X1 115 5
3010770X1 30–50
30–55
3010775X1 110 5
110 10
110 20
110 25
3010777X1 40 75
40 80
40–170
3010783X1 30–55
3010784X1 30 70
3010785X1 50 20
3010791X1 80 25
3010799X1 25 75
25 80
3010800X1 50 70
3010805X1 50–90
3010808X1 50–110
50 115
3010812X1 70 380
70 385
3010818X1 70 25
3010819X1 80 130
3010827X1 70 115
70–120
3010833X1 20–15

3010836X1 20 30
3010838X1 20 25
3010839X91 20 25
3010856X1 10 185
3010859X1 10 175
10 180
3010860X1 10–175
10–180
3010867X1 60 30
3010868X1 60 65
3010875X1 30 35
30 40
30 45
40 5
40–205
60–15
60 25
60 30
3010876X91 25 45
25 50
3010890X1 25 75
25 80
30–20
3010895X1 70–25
3010901X91 25 60
3010904X1 40 170
3010909X1 110 105
3010917X1 50 65
50 70
3010920X1 40 205
40–210
3010921X1 40–210
3010922X1 40 205
40 210
3010932X1 40 50
40 55
40 60
40 75
40–80
3010933X1 25–120
3010935X1 100 5
100 15
100 20
3010942X1 10 270
10 275
100 30
100–35

3010945X1 40 135
40 145
3010946X1 30 20
3010948X91 20 70
3010950X91 25 25
3010956X91 25 25
3010969X1 50–10
50–15
3010974X1 70 430
70 440
3010975X1 70 455
70 460
3010980X1 70 380
70 385
3010981X1 20–30
3010989X1 20–30
25 25
3010990X1 30 30
3010997X1 40 85
3011002X1 130 35
3015017X1 70 55
70 120
3015036X1 100–10
3015134X1 25–85
25 90
130 85
3015150X1 70 380
70 385
3015257X1 110 155
3015474X1 70 410
3019139X1 25–120
25–135
25 145
80 105
80 110
80 115
80 120
3019213X1 20 85
70–175
70–180
3019228X1 40 150
3019268X1 50 10
3019274X1 20 20
20 25
3019302X91 70 390
70 395
70–400
3019304X1 40–5

3019306X1 50 90
3019377X91 70 250
3019379X91 70 80
70 85
70 90
70 95
70–125
70–130
3019381X91 20 55
70 105
70 130
3019382X1 70 200
70 210
3019383X91 70 35
70–40
3019385X91 20–80
3019387X91 20 105
70 80
70 90
70 225
70 230
70 240
70–245
70–395
70 400
3019389X91 70 55
70 60
70 115
70 120
3019391X91 70 130
3019393X1 20–35
20–55
30 35
70 100
70 135
70 390
70 395
70 400

3019394X1 **20 55**, **20 75**, **60 60**, **70 35**, **70 40**, **70 70**, **70–80**, **70–85**, **70 90**, **70 95**, **70 250**

3019395X1 **20 50**, **20 60**, **20 65**, **20–75**, **20–80**, **30 20**, **50 110**, **50 115**, **70 35**, **70 50**, **70 70**, **70–80**, **70–85**, **70 90**, **70 95**, **70 105**, **70 125**, **70 130**, **70 145**, **70–150**, **70–205**, **70 210**, **70 215**, **70 220**, **70 255**, **70 260**, **70 265**

3019396X1 **20 55**, **20 75**, **20 80**, **25 75**, **25 80**, **40 5**, **70–40**, **70–105**, **70 130**, **70 390**, **70 395**, **70 400**

3019397X1 **20 80**, **20 105**, **30–30**, **30–35**, **50 75**, **50 80**, **70 35**, **70 40**, **70 80**, **70 85**, **70–90**, **70–95**, **70 130**, **70 145**, **70 150**, **70 240**, **70 245**

3019398X1 **20 55**, **20 65**, **20 70**, **20 105**, **25 75**, **25 80**, **40–10**, **70–50**, **70 55**, **70 60**, **70 70**, **70 80**, **70 85**, **70 90**, **70–95**, **70–105**, **70 110**, **70 115**, **70 120**, **70 125**, **70 130**, **70 215**, **70–225**, **70–230**, **70 235**, **70 240**, **70 245**, **70 270**, **70 390**, **70 395**, **70–400**, **70–410**

3019399X1 **30 5**, **30 10**, **70 80**, **70 85**, **70 90**, **70 95**, **70–130**, **70–380**, **70 385**, **70 390**, **70 395**, **70 400**

3019408X91 **20 35**, **20 55**

3019410X91 **70–35**, **70–40**

3019412X91 **30 20**, **50 110**, **50 115**, **70 70**, **70 105**

3019414X91 **20 75**, **70–40**, **70–130**

3019416X91 **20 80**, **20 105**, **70 80**, **70 90**, **70 130**, **70 145**, **70–150**, **70–240**, **70 245**

3019418X91 **20 70**, **25 75**, **25 80**, **40 10**, **70 130**, **70–215**, **70–225**, **70 235**, **70 390**, **70 395**, **70 400**, **70 410**

3019420X91 **70 80**

3019422X91 **70–85**, **70–90**, **70 95**

3019424X1 **30 20**, **70 45**, **70 410**

3019438X1 **30 20**, **50 65**, **50–70**, **40–170**, **10 230**, **10 240**, **110 165**, **120 30**

3019467X1

3019541X1

3019558X1

3019560X1

3019564X1 **10 70**, **10 200**, **110 125**, **110 175**, **110 180**

3019566X1 **70 165**

3019571X1 **50–90**

3019574X1 **70–200**, **70 210**

3019575X1 **40 160**, **60 30**, **100 30**, **100 35**, **100 40**, **100–55**, **115–5**, **130 80**

3019584X91 **70 80**, **70 85**, **70 90**, **70 95**, **70 260**, **70–265**

3019586X91 **20–75**, **20 80**

3019588X91 **70 35**, **70 40**

3019592X91 **70 390**, **70 395**, **70 400**

3019613X91 **70–270**

3019627X91 **70–85**, **70 95**

3019633X91 **70 380**, **70 385**

3019635X91 **30 35**

3019639X91 **20 75**, **70 50**, **70–70**, **70–145**, **70 215**, **70 255**, **70 260**

3019642X1 **50 10**, **50 15**

3019645X91 **70 50**, **70 70**, **70 105**, **70 110**

3019649X91 **30 5**, **30 10**

3019658X91 **70–80**, **70–85**, **70 90**, **70 95**, **70 125**, **70 130**

3019660X91 **70 100**, **70 135**, **70–390**, **70–395**, **70 400**

3019694X91 **70 80**, **70 85**, **70 90**, **70 95**, **70 125**, **70–130**, **70–215**, **70 220**

3019700X91 **20 55**, **20 75**, **60 60**, **70 70**, **70 80**, **70–85**, **70–90**, **70 95**

3019851X1 **20 35**

3019856X1 **60 85**

3019861X1 **20 35**, **20 40**

3019862X1 **20 35**, **20–40**, **70–380**, **70 385**

3019868X1 **60 25**, **60 30**

3019871X1 **30 35**, **30 40**, **30 45**

3019874X1 **40–5**

3019888X1 **60–30**

3019890X1	60 30
3019894X1	90 65
	90 70
3019897X1	70 110
3019899X1	20 15
	30 50
	30–55
	30–60
	30 65
	30 70
3019901X1	20 15
	30 40
	30 45
3019905X1	30 40
	30–45
3019908X1	10–185
	10 225
	10 230
	10 235
	10 240
3019920X1	70 110
3019927X1	60 85
3019950X1	110–70
3033343M1	60–50
3038134M1	10 270
	10 275
3039014M1	30 35
3040758M1	120 15
	120 25
3041656M1	120 35
3041932M1	110–80
	110–85
3042087M1	120 15
3042257M1	120 5
	120 10
	120 50
3042422M1	130 85
3042427M1	40 40
	40–45
3042428M1	40–40
	40 45
3042430M1	40 40
	40 45
3042431M1	40 40
	40 45
3042433M1	40 25
3042434M1	40–25
3042464M1	80 55
	80 70
3042523M1	10 300
	90 50
	120 5
	120 55
3042581M2	10–305
	10–310
3042637M2	60 65
3042671M1	90 50
3042847M1	25 40
3042848M2	25 40
3042866M1	25 40
3042898M2	25 40
3045014M2	100–60
	110–205
3045560M3	25 65
	25 70
3046114M1	30 35
	30 40
	30 45
3052440M92	50 35
3052650M1	30–45
3052926M5	30–45
3052943M2	120 30
3052944M2	120 30
3052952M6	30 40
	30 45
3052960M1	20 75
	70 250
3101494M1	110–255
	110–265
3101653M1	110 255
3101663M1	110 270
	110 275
3101934M1	40 40
3101996M1	110 255
	110 265
	110–270
	110–275
3102068M1	70 275
3102069M1	70 275
3102086M91	40 40
	40 45
3102130M1	110 285
3102131M1	110 285
3102133M1	110–285
3102136M1	110–285
3102137M1	110 285
3102139M1	110 285
3102141M1	110 285
3102150M1	110 285
3102240M1	70 275
3102292M2	110 285
3102387M1	110–285
3102389M1	110–285
3102390M1	110 285
3102391M1	110 285
3102393M1	110 285
3102394M1	110 285
3102396M1	110 285
3102397M1	110 285
3102399M1	110–285
3102400M91	110–285
3102401M1	110 270
	110 275
	110 285
3102794M1	110 285
3103289M1	110 275
3103596M1	110 260
3103597M1	110–260
3103605M1	110–260
3103608M1	110 260
3103612M91	110 260
3103830M1	40 40
3104724M1	70 275
3104936M1	70 275
3104944M1	60 40
3104945M1	60–40
3104946M1	60–40
3104947M1	60 40
3104948M1	60 40
3105050M1	120 25
3105100M1	110 285
3105382M1	110 270
	110 275
3105395M1	110–270
	110–275
3105397M1	110 270
	110 275
3105404M1	110 270
	110 275
3105505M1	120 5
	120 10
3105506M1	120–10
3105793M1	110 255
	110 265
3105795M1	110 255
	110 265
3105797M1	110 255
	110 265
3105953M91	40–95
	40–100
3106461M1	40 40
3106496M1	110 185
3107223M1	110 285
3107224M1	110 285
3107225M1	110 285
3107226M1	110 285
3107227M1	110–285
3107228M1	110–285
3107940M92	40 90
	40 95
	40 100
3107941M91	40 95
	40 100
3108232M1	70 275
3108233M1	70–275
3108238M1	70–275
3108244M1	70 275
3108248M1	70 275
3108257M1	70 275
3108258M1	70 275
3108259M1	70 275
3301742M1	110 40
3301743M1	110–40
3302213M1	110–225
3303019M3	110 40
3303021M91	110 40
3303074M1	110 35
	110 40
3303075M1	110 40
3303076M1	110 40
3303077M1	110–35
	110–40
3304510M92	110 135
	110 150
330924X1	20 85
3310307M91	120 20
3310669M91	110 155
	110 165
3310764M1	30–15
3310765M1	30–15
3310825M1	110 150
3310827M92	110 140
	110 155
3310831M91	110 135
	110 150
3310833M1	110 135
	110–150
3310834M1	110–135
	110 150
3310836M1	110 155
3310837M1	110 135
	110 140
	110 150
	110 155
3310839M1	110–140
	110–155
3310840M1	110 135
	110 150
3310841M1	110 135
	110 150
3310842M1	110 135
	110 150
3310843M1	110–135
	110–150
3310848M1	110 135
3310849M1	110 135
	110 150
3310850M1	110 135
3310871M1	110 165
	110 170
3310945M1	110–140
	110–155
3310946M1	110 140
	110 155
3311579M91	110 155
3311603M91	60 70
3320197M1	30 25
3321291M1	30 35
	30–40
	30–45
3322250M3	50 65
3322463M2	25 65
	25 70
	25 75
	25 80
3370427M91	80 30
3380040M1	25–45
	25–50
3380041M1	25 45
	25 50
3380042M1	25 45
	25 50
3380192M2	25 40
3380422M1	90 10
	90–15
	90–20
	90 25
	90 50
	115 15
3380713M2	30 35
	30 40
	30 45
3380806M1	30–40
	30–45
3381258M1	30 45
3381387M4	25 165
	70 50
	70 115
	70 120
3381874M1	70 65
	70–75
3382069M2	50–40
	50 45
3382235M1	25 20
3382343M1	25 85
	25 90
3382377M1	30 60
3382476M2	30 60
3382477M4	30–60
3382480M1	30–60
3382481M2	30 60
3382789M4	60 5
	60 10
3382812M91	60 5
	60 10
3382813M91	60 5
	60–10
3382824M1	40–50
	40 160
3382825M1	40 80
3382826M1	40 105
	40 110
	40 115
	40 120
	40–170

3382828M1 25 45
25 50
3382831M1 25 45
25 50
3382868M1 50 35
50 40
50–45
3382874M1 50–35
50 40
50 45
60 50
3382971M1 50 40
50 45
3382972M2 50 40
50–45
3382979M1 25–85
25 90
50 40
50 45
50 50
50 55
3383009M1 50 40
3383079M5 70–190
70–195
3383164M2 25 45
25 50
3383171M1 25 45
25 50
338334X1 50 85
110 285
3383476M1 25–35
3383477M1 25–35
3383516M1 25 35
3383517M1 25 35
3383526M1 25 70
3383531M1 25 70
25 120
3383533M1 25 70
3383709M1 30–35
30–40
3383712M1 30 45
3383714M1 30 45
3383977M1 10 185
3383989M1 60 35
3383990M1 60 35
3383996M1 60 35
3383999M1 60–35
3384105M1 60–35

3384126M1 60 35
3384129M1 60 25
3384131M1 20 15
60 25
60 30
3384133M1 60 35
3384183M1 40–130
40–135
40 140
40 145
3384183M2 10 165
40 35
40 40
40 45
3384265M6 60–20
3384279M1 30–55
3384348M1 60 20
3384387M1 20 75
20 80
70 55
70 60
70 110
70–115
70–120
70 130
70 205
70 215
70 220
3384388M1 50 90
3384414M2 60 50
3384427M1 60–50
3384488M1 60–50
3384502M1 50 90
3384523M1 60 50
3384524M1 60 50
3384597M1 30 35
30 40
30 45
3384600M2 30–20
130–55
130 60
130 65
130 75
3384601M4 30 35
30 40
30 45

3384602M4 30 35
30 40
30 45
3384603M1 130 55
130 60
130 65
3384620M1 130–10
130–15
3384624M1 130 40
3384656M1 70 175
70 180
3384657M1 70 180
3384658M1 20 85
3384685M3 70 185
3384950M1 20–35
3384958M2 20–35
20 55
3385446M1 110 40
3385465M1 110 35
3385525M2 20 35
20 40
3385534M1 40 130
40–135
40–140
40 145
3385604M1 20 85
20 90
20 95
25 115
70 175
70–180
3385612M3 20–85
70 175
3385620M3 25 65
25 70
3385621M2 25 65
25 70
3385622M2 25 75
25–80
3385643M1 25–65
25 70
3385644M1 25 65
25 70
3385674M1 40 5
3385676M1 10 200

3385713M91 20 35
20 50
20 60
30 60
30 65
30 70
60–55
70–70
70 105
70 145
3385769M2 25 75
25 80
338577X1 130 10
130 15
130–20
130–40
3385791M1 25 70
3385793M1 25 70
3385796M2 70 5
3385821M1 80 105
80 110
80 115
80–120
3385839M2 25–85
30 5
30 30
40 5
3385863M1 25 70
3385884M2 25 45
3385913M2 10 290
10–295
3385963M1 60–5
60 10
338612X1 80 35
338614X1 10 70
10 195
10 205
10 215
338615X1 10–10
10–95
40 15
3386166M1 25 105
25 110
50 50
50 55
338616X1 10 270
10–275
110–125

338618X1 10 195
3386192M1 25 105
25 110
50 50
50 55
3386195M2 25 85
25–90
3386198M1 25–105
25 110
50 50
50 55
50 60
3386214M1 10 185
3386216M1 50 75
50–80
60–5
60 25
60 30
338622X1 10 255
10 260
338627X1 110 260
3386314M15 60 30
3386369M1 40–160
3386412M2 25–65
25 70
3386413M1 25 65
25 70
3386414M1 25 65
25 70
3386416M1 25 65
25–70
3386457M2 40–15
3386466M1 130 80
3386471M1 60 20
3386472M1 60 20
3386514M1 40 185
70 415
70 420
70–425
70–430
70 435
70 440
70 445
70 450
70 455
70 460

3386515M1 40 185
70 430
70 440
70 455
70 460
3386519M1 25 45
3386520M1 25–45
3386678M91 70–200
70 210
3386681M92 70 200
70 210
70 220
70 235
3386683M1 25 35
25–65
25–70
25 75
25 80
3386903M1 50 75
50 80
3386947M1 70 225
70 230
3386987M1 50–95
3386990M1 10–205
10 215
10 230
10 235
3387135M1 60 35
3387137M1 60 35
3387153M1 40 165
3387161M2 40–15
40–20
40 25
3387182M1 60 50
3387192M2 50 90
3387193M1 50 20
50 90
3387198M1 50 20
50–90
3387233M1 60–40
3387270M91 60 5
60 10
3387281M1 30 50
3387318M1 10 180
50 120
80 50
80–60
90–45

3387319M1	80 40
	80 50
	80 55
	80 60
	80 65
	80 70
3387322M1	80–50
	80–55
	80 60
	80 65
	80 70
3387325M1	80 50
	80 60
	80 65
	80–70
3387326M2	80–30
	120 40
	120 50
	120 55
3387346M1	50 20
	50 90
3387347M1	50 20
	50–90
3387381M1	50–95
3387447M1	40 185
	70 415
	70 420
	70 425
	70 430
	70 435
	70–440
	70–445
	70 450
	70 455
	70 460
3387509M92	50 35
3387512M1	110 125
3387513M1	110 125
3387515M1	110–125
3387574M91	70–200
	70 210
3387578M1	110 225
	110 230
3387626M2	25 125
3387727M1	60 50
338773X1	70 105
	70–135
3387756M1	80–35

3387838M11	60 35
3387842M1	60 35
3387843M2	60 40
3387937M1	60 40
3387938M1	60 40
3387939M2	60 40
3388030M1	110–165
3388063M1	50–75
	50 80
3388231M1	110 90
	115 10
3388272M1	100 30
	100 35
	100 40
	100–55
3388399M2	60–40
3388458M4	110 215
3388511M91	110 40
3388603M1	25 125
3388743M1	110 45
	110 125
3388758M2	110 125
3388779M1	110–115
3388837M1	25–125
3388840M2	110 45
	110 125
3388889M1	10 255
	10 260
	120 55
3388920M93	70 5
	70–10
338909X1	60–45
3389211M1	50 20
3389250M1	110 165
3389332M2	50 85
3389333M1	50 95
3389337M1	50 95
3389338M1	50 95
3389339M2	50–95
3389342M93	50–75
	50 80
3389345M3	50 75
	50 80
3389346M1	50 95
3389347M2	50 85
3389349M1	50 85
3389351M1	110–165

3389401M1	80 50
	80 55
	80 60
	80 65
	80 70
3389410M1	10 230
	10–240
338941X1	70–5
	70 10
3389423M91	10 230
	10 240
3389452M1	10 240
3389506M1	25 125
3389552M1	60 30
3389553M1	60–30
3389580M2	50–45
	50 50
	50 55
3389596M1	120 30
3389599M1	50 95
3389603M1	50 85
3389604M1	50 85
3389605M1	50–85
3389610M1	50–85
3389611M1	50 85
3389612M1	50 85
3389613M2	50 95
3389614M1	50 85
3389615M1	50 75
	50 80
3389631M91	50–85
	50–120
3389664M1	110 190
3389702M1	60 60
3389746M1	110 45
	110 125
3389749M1	110 200
3389750M1	110 200
3389766M1	50–105
338977X1	120–5
	120 25
3389791M1	50 105
338980X1	110 30
3389825M1	50 105
3389841M1	60 60

3389854M1	110 55
	110 60
	110 165
	110 200
	110 205
3389861M91	50 85
3389907M92	120–15
	120–25
3389910M92	120 15
	120 25
3389958M1	70 5
	70 10
339003X1	60 90
339009X1	10 185
	20–85
	25–115
	40 30
	110 125
339010X1	10 20
	10 255
	10 260
	70 145
	70–150
	100–60
	120 30
339011X1	70 155
	70 160
339018X1	10 270
	10 275
339024X1	10 230
	10–235
	10–240
	110 85
339026X1	90 35

339030X1	10 70
	10 180
	10 185
	10 290
	10 295
	20 85
	25–115
	50–100
	50 110
	50 115
	60 60
	60 65
	70 225
	70 230
	70–235
	70–240
	70 245
	70 415
	70 420
	70 425
	70 435
	70 445
	70–450
	70–465
	80 30
	90 65
	90 70
	90 75
	100 10
	100 15
	100–20
	110–65
	115 5
	120 15
	120 20
	120 50
	120 60
339034X1	40 170
	40–205
	40–210
	100 30
	100 35
	100 40
	100 55
	115 5
	130 80
339035X1	40–65
	60–10

339070X1	20 85
	20 90
	20 95
	70 5
	70 10
339073X1	50 90
339080X1	40–25
	60–5
	60 10
339081X1	110 280
339096X1	50 110
	50 115
	70 415
	70 420
	70–425
	70–430
	70 435
	70 440
	70 445
	70 450
	70 455
	70 460
	90–90
339102X1	25–120
	25 135
	25 145
	25 155
	80 105
	80 110
	80 115
	80–120
	90–20
	110 30
	110 165
339106X1	10 170
	10 175
	10 180
339107X1	10 185
	10–235
	10–240
	100 45
	100 50
339114X1	40 75
	40 80

339123X1
10 185
10 195
10 235
10 240
10 255
20 50
20–60
20–65
20 85
20 90
20 95
25 70
25 115
25 120
30–25
40–175
40 180
50 60
50 75
50 100
50 110
50 115
70–35
70–40
70 185
70 190
70 195
70 205
70 215
70 220
70–380
70–385
70 390
70 395
70 400
70 465
80 35
100 25
100–30
100–35
110 5
110 30
110 40
110 70
110 75
110 80
110–85
110–105
110 185
110 190
110 235
110 240
120 15
120 25
120–35
120–55
120 65

339124X1
10 70
10 185
10 230
10 240
10 255
10–260
10–290
10 295
20 50
20 60
20 65
20 105
25 115
25–125
40–35
40 40
40 45
70 5
70 10
70 35
70 40
70–160
100–10
100 15
110 100
110 115
110 120
110 130
110 250
110–285
110–295
120 10
120 40
100 5
70 400
20 50
20 60

339129X1
339136X1
339159X1

339160X1
80 50
80 55
80 60
80 65
80 70
110 125

339169X1
10 20
10 175
10 180
10 185
10 195
10 200
10–225
10–230
10 235
10 240
10 255
10 260
10 270
10 275
20–50
20–60
20 65
20 85
20 90
20 95
20 105
50 75
50–80
70–45
70 185
70 190
70 195
70 390
70 395
70 400
80–35
90–105
100 5
100 15
100 20
100 25
100 30
100 35
110–10
110–30
110 40
110 70
110 80
110 85
110 105
110 190
110–255
110–260
110 265
110 270
110 275
110 295
120 5
120 10
120–15
120–25
120 35
120 40
120 45

339204X1
10 210
339228X1
10 195
10 220
10–270
10–275
10 280
10 285
20 85
25 105
25 110
25 120
25–130
25–140
25 150
25 215
30 15
30 25
50 50
50 55
90–90
100–5
100 10
100 15
100 20
110 5
110 25
110 285

339229X1
40–175
110–30

339230X1
90 65
90 70

339244X1
20 80
90 45

339246X1
40 95

339262X1
10 70
20 50
20 60
20 65
20 80
70 465
70–470
100–10
110 65

339269X1
10 20
10 25

339275X1
100 30
100 35

339282X1
70 5
70–10
110–80
110 85

339287X1
110 255
110 265
110 270
110 275

339290X1
40 40
339291X1
10–20
110–105

339299X1
50 75
50 80

339328X1
20 50
20 60
20 65

339337X1
10 195
10–255
10–260
10 270
25 65
25 70
70 250
90 105
100 25
100–60

339356X1
30–25
339362X1
110 270
110 275

339368X1
10 305
339369X1
60 40

339374X1 80 40
110 120
110 285
120 5
120 10
120 15
120–25
120–35
339375X1 80 30
90 75
110 200
110 205
120 15
339376X1 110 285
339402X1 60–65
339469X1 50–10
339470X1 20 20
20 25
339481X1 60 50
70 110
339488X1 50 35
50 40
50–45
339494X1 25–5
50 75
50 80
90 40
339498X1 100 30
339531X1 30 20
339548X1 10 290
10–295

339560X1 10 180
10 255
10 260
25 135
25 145
25 155
40–30
40–125
40 130
40 135
40 140
40 145
50 60
60 60
70–110
70–415
70 420
70 425
70 430
70 435
70 440
70 445
70–450
70–455
70 460
80 30
90 35
90 80
100 10
100 20
110–5
110–30
110 90
110 190
110 200
110 260
115 5
115 10
115–20
120–15
339563X1 10 230
10 240
339583X1 20 5
20 10
339592X1 25 5
25 125
90–40

339605X1 25 25
25 85
339606X1 25 85
339608X1 40 150
50 75
50 80
50–100
60–25
60 30
60 35
60 40
339613X1 90 70
339616X1 40 170
100 30
100–35
339666X1 10–180
25 115
50 100
70 185
70 190
90 80
90 155
100–15
100–20
110 65
110 75
110 205
120 20
120 40
339761X1 10 10
10–20
10–175
10 185
10 200
10 270
10 275
25 120
50 75
50–80
70–185
70 190
70 195
80 40
90 40
100 25
100 60
110–185

339783X1 40 40
40 45
40 195
339794X1 20 95
339804X1 110 65
110 70
110–295
115–5
339805X1 100 30
100 35
100 40
100 55
130 80
339881X1 40 160
40–200
3405180M1 120–65
3405185M1 80 5
80 10
80 15
80 20
80 30
110 230
3426255M1 60–70
3426266M1 60–85
3426619M1 60 90
3426768M1 60 90
3426771M1 60 90
3426851M2 60 90
3426855M3 60 90
3426938M1 60 80
3427079M1 60–85
3427185M1 60–80
60 90
3427281M1 60 85
3427282M1 60 85
3427283M1 60 85
3427284M1 60 85
3427285M1 60 85
3427286M1 60–85
3427313M1 60–85
3427431M1 60 90
3427443M1 60 85
3427444M1 60 85
3427445M1 60 85
3427460M1 60 85
3427462M1 60 85
3427463M1 60–85
3427466M1 60–85

3427837M2 60 85
3427838M1 60 85
3427839M1 60 85
3428064M1 60 80
3428141M3 60 90
3428155M91 60 90
3428156M1 60–90
3428303M1 60–90
3428305M1 60 90
3428314M1 60 85
3428397M1 60 90
3428408M1 60 85
3428657M3 60 80
3428722M1 60 90
3428723M1 60–90
3428724M1 60–90
3428725M1 60 90
3428726M1 60 90
3428727M1 60 90
3428942M1 60 90
3429318M1 60 90
3429322M1 60 90
3429323M1 60–90
3429400M1 60–80
60 90
3429520M1 60 90
3429521M1 60 90
3429676M1 60 85
3429678M1 60 85
3429679M1 60 85
3429680M1 60–85
3429681M1 60–85
3429682M1 60 85
3429683M1 60 85
3429759M93 60 70
60 75
3429815M3 60 90
3429864M1 60 90
3429920M2 60–85
3429921M1 60–85
3429943M1 60 90
3429948M95 60 80
3429956M1 60 90
3429957M1 60 90
3443413M1 60 45
3443428M1 60 45
3443429M1 60–45
3443430M1 60–45

3443432M1 60 45
3443433M93 60 45
3443703M92 60 45
3443707M91 60 45
3443896M1 60 45
3443901M1 60 45
3467187M1 20–35
20–80
3467932M1 50 105
3467933M1 50 105
3476132M91 110 20
3476133M91 110 20
3476502M91 70 30
3476715M91 10 30
3477529M91 10–30
3477859M1 10–30
3478051M1 110 20
3478052M1 110 20
3478386M1 10 30
348281X1 10 50
3483098M92 60 40
60 45
3484804M1 60–45
352438X1 40–170
3530168M1 110 40
353428X1 110 255
110 265
353431X1 25 120
110 285
353436X1 70 50
70–145
70–150
353439X1 25 5
353443X1 40 110
40 115
40 120
40 140
40 145
353558X1 110–295
353561X1 110–255
110 265
353691X1 25 15
70 35
70 40
353693X1 30 35
30 40
30–45
353724X1 25–5

353754X1	30 25
353766X1	60 35
353775X1	70 50
	100 30
	100 35
	130 70
353807X1	110–285
354048X1	30–15
354057X1	30 25
354066X1	25 70
	25 120
	100 25
354068X1	60 40
354071X1	60 40
354083X1	60–70
354092X1	40–20
	40 25
354190X1	30 15
354262X1	25 65
	25 70
354264X1	25 65
	25 90
354276X1	25–5
354469X1	70–260
	70 265
354649X1	25 5
354663X1	30 35
	30 40
	30 45
354700X1	20 35
	20–55
354702X1	20–50
	20 60
	20 65
354704X1	10 220
	90 65
354708X1	30 45
354710X1	100 30
	100–35
355529X1	50–110
	50 115
355547X1	30 35
	30 40
	30 45
355566X1	10 175
355647X1	70 110
355782X1	70–410
355829X1	70 260
	70 265
355921X1	25 40
356005X1	30 60
356039X1	25 75
	25 80
356040X1	20–35
	20–40
356375X1	20 35
	20 55
356376X1	70 105
356560X1	20 65
	70 105
356561X1	70 145
356578X1	70–145
356579X1	20–50
	20 60
	70 225
	70 230
	70 240
	70 245
356580X1	70 145
	70–225
	70–230
	70 240
	70 245
356627X1	20 50
	20 60
	20 65
	70 105
	70–130
	70–135
356629X1	40 175
	70 100
	70 225
	70 240
356633X1	70 140
357145X1	10 290
	10–295
	10–300
	10 305
	10 310
357146X1	10 290
	10 295
	70 175
	70 180
357197X91	70 285
	70 295
	70 305
	70 315
	70 325
	70 335
	70–345
	70–355
	70 365
	70 375
357831X1	70 415
	70 420
	70 425
	70 430
	70–435
	70–440
	70 445
	70 450
	70 455
	70 460
	70 465
	70 470
3580173M1	110–210
	110–215
3580195M1	40 15
3580198M1	40 15
3580231M1	60 10
3580247M1	70 110
3580257M1	110 55
	110 210
	110–215
	120–15
	120 25
3580313M1	100 100
3580315M1	100 80
3580320M5	100 100
3580321M5	100 80
3580396M1	20 10
3580436M1	30–35
	30–40
	30 45
3580458M2	30 35
	30 40
3580502M1	30 25
3580524M91	40 25
3580564M1	100 60
3580565M97	100–60
3580599M1	10 250
	80 140
	80 145
	80 155
3580604M91	50 105
3580617M12	30 35
3580618M12	30–35
3580619M2	30–35
	30 40
	30 45
3580639M1	100 60
3580695M1	70 185
	70 190
	90 90
	110–45
3580720M1	60–80
3580767M1	90 35
3580776M1	110 70
3580796M1	20 15
3580856M1	10 215
	100 60
3580868M1	80 50
	80–55
	80–60
	80 65
	80 70
	90 10
	90 15
	90 20
	90 25
3580888M5	60–5
	60–10
3580902M1	110 195
3580933M91	110 40
3580934M91	110 40
3580971M1	10 235
	10 240
3580974M2	10 205
	10–210
	10–215
	10 220
3580982M1	110 80
	110 85
3580984M1	10 310
	90 95
	90 100
	90 105
	90 110
	120 15
	120–20
	120–25
3580985M1	50 85
3581051M1	30 35
	30 40
3581074M2	30 35
	30 40
3581075M2	30 35
	30–40
3581116M11	50–75
	50 80
3581124M11	50 75
	50 80
3581130M1	50 75
	50 80
	50 95
3581132M1	50–75
	50–80
	70 130
3581239M1	110 245
3581305M1	30 15
3581307M2	70 80
	70 85
	70 125
358139X1	10–185
3581424M1	10–195
	80 65
	80 70
3581440M1	50 40
3581463M2	70 210
	70 220
3581464M1	70 210
	70–220
3581491M1	70–210
	70 220
3581507M1	110 115
	110 245
3581524M5	100 105
3581525M6	100 110
3581526M4	100 115
3581527M1	60–30
3581532M1	100–115
3581533M2	100 110
3581563M1	100 80
3581564M1	100 100
3581566M1	100 110
3581568M1	100 115
3581570M2	100 105
3581571M2	100–110
3581573M2	100–115
3581576M3	10 5
	10 10
	10 15
	10 40
3581636M1	60 5
	60 10
3581642M1	20–15
	40–205
3581687M1	40 165
3581690M1	20 85
3581696M1	50 110
	50 115
	70 70
	70 105
3581703M1	120–30
3581721M1	60–35
3581788M1	130 40
3581789M3	130 40
3581857M2	130 15
3581859M2	130 15
3581900M1	10 300
3581980M1	40 110
	40–115
	40–140
	40 145
3581997M1	40 15
3582043M2	40 25
3582094M1	80 30
	90 95
	90 100
	90–105
	90–110
	110 115
	110 125
	110 145
	110 160
3582139M4	130 55
	130 60
	130–65
3582194M1	30–35

3582195M1	30 35
3582197M1	40 50
3582200M1	60 25
	60 30
3582201M1	60 25
	60 30
3582213M3	40–50
3582216M1	40–50
3582441M1	110 185
3582442M1	110 185
3582443M1	110 185
3582444M91	110 185
3582445M1	10 185
3582455M2	50 105
3582456M1	50–105
3582802M1	90–65
	90 70
3582832M1	10 230
	10 240
3582836M1	90 45
3582848M2	10 210
	10 220
	10–230
	10–235
3582867M92	60 5
	60 10
3582876M1	10 220
3582877M2	10 210
3582880M1	10 220
3582881M1	10 220
3582883M91	10–220
3582885M91	10–220
3582887M1	10 220
3582888M1	10 220
3582893M1	50 20
	50 90
3582933M1	50 20
	50 90
3582934M1	50–20
	50–90
3582936M1	10 210
	10 220
3583069M1	110 190
	110 195
3583086M1	110 185
3583099M2	130 15
3583103M93	10–220
3583105M1	10–220
3583240M1	30 5
	30 10
3583287M2	25 5
	90 40
3583301M91	25 75
	25 80
3583308M92	80–85
	80–90
	80 95
	80 100
3583344M1	80 35
	80 150
	80 155
	90 100
	90–105
3583347M2	130–15
3583478M1	25 40
3583497M1	100 105
3583509M12	30 45
3583510M12	30 45
3583514M1	80 135
3583524M1	10 220
3583530M2	30–35
	30–40
	30 45
3583538M2	30 35
	30 40
3583543M2	10 90
	10 95
3583548M1	90 65
	90–70
3583585M2	60–50
3583586M2	60 50
3583591M1	70 295
	70 305
	70 315
	70 335
	70 345
	70–355
	70–375
3583649M1	110 135
	110 150
3583727M3	30 45
3583924M2	70 180
3583925M1	70 180
3583930M3	70 175
	70–180
3583932M1	70 390
	70 395
	70 400
3583950M1	10 230
	10 240
3583973M2	110 175
	110–180
3583993M1	30–35
3583994M91	30 30
	50 75
	50 80
358724X91	20 55
	70 145
	70 150
358733X1	70–285
	70–295
	70 305
	70 315
	70 325
	70 335
	70 345
	70 355
	70–365
	70–375
358882X1	130 70
358956X1	40 170
359008X1	30 65
	30 70
359118X1	30 60
359130X1	25 20
359135X1	60–40
359187X1	10–210
359236X1	60 85
359288X1	70 320
	70 360
	70 370
359291X1	70 55
	70 60
359299X1	70–50
359300X1	70–50
	70 115
	70 120
359306X1	70 115
	70 120
3595678M1	100 80
	100 125
3595679M1	100–80
	100–125
3595680M1	100 80
	100 125
3595685M1	100 80
	100 125
3596029M1	100 100
3596037M1	100 100
3596045M1	100–100
3596432M1	100–80
3596459M1	100 100
3596467M1	100 100
3597428M1	100 105
3597429M1	100 110
3597430M1	100 115
3597432M1	100 110
3597433M1	100–115
3597435M1	100–110
3597436M1	100 115
3597443M1	110 290
3597445M1	110 290
3597446M1	100 105
3597447M1	100 110
3597448M1	100 115
3597449M1	100–105
3597450M1	100–110
3597451M1	100 115
3597454M1	110 290
3597673M1	100 25
3598904M1	80 150
	80 155
3600190M1	25 105
	25–110
	40–185
	40 190
	50 50
	50 55
	50 60
	70 415
	70 420
	70–425
	70–430
	70 435
	70 440
	70 445
	70 450
	70 455
	70 460
	70–465
	70–470
3600191M1	25 90
	25 105
	25 110
	40 185
	40 190
	50 50
	50–55
	50–60
3600195M91	10 205
	10 215
	10 220
3600218M1	110 115
	110 120
3600219M1	110 115
	110–120
3600224M1	80–40
	80 45
3600444M91	10 205
	10 215
360201X1	110 295
360367X1	110 205
360567X1	25 115
360955X1	50–105
3611638M1	10–40
3611662M1	10 40
3611893M1	110 145
	110 160
3611972M1	10 165
3611973M1	10 165
3611974M1	10 165
3613599M91	10–180
3613871M3	25–115
3615225M2	25 10
	25 20
3615226M2	25 10
	25 20
3615232M2	25 15
	25 25
3615236M1	25–15
	25–25
3615246M2	25 10
	25 20
3615247M1	25 10
	25 20
3615257M1	50 75
	50 80
3615331M1	10 225
	10 230
	10 235
	10 240
3615346M1	25 10
	25 20
3615370M3	130–55
	130–60
	130 65
3615444M1	25 15
	25 25
3615467M1	25 15
	25 25
3615468M1	25 15
	25–25
3615557M1	90–50
	110 55
	110 60
3615601M1	50 85
3615602M1	50 95
3615603M2	50 95
3615604M1	50 75
3615609M2	50–75
	50–80
3615647M1	40 150
	40 155
3615652M1	25 110
	50 120
	80 30
	120 40
	120–45
	120–55
	120 60
3615707M93	40 150
3615708M1	40 150
3615709M1	40 150
3615710M1	40 150
3615711M1	40 150
3615712M2	40–150
3615822M1	70–390
	70 395
	70 400
3615903M1	120 30
3615904M1	120 30
3615912M91	120 30
3616003M91	60 35
3616020M2	25–30
3616056M2	50–90

3616062M1 110 175
110 180
3616064M1 110 175
110 180
3616128M2 10 175
3616189M91 10 180
3616193M2 10–180
3616258M2 10–10
3616259M1 70 80
70 85
70 125
3616277M1 30 25
110 5
110 10
110–80
110–85
110 100
110 105
110 190
110 195
110 295
115 5
120–65
3616298M1 40–40
3616299M1 40 40
3616324M1 25 45
3616340M1 100 60
3616399M1 10 305
10 310
3616400M2 60 50
3616410M91 25–45
3616429M1 110–175
110 180
3616435M1 10 230
10 240
3616503M2 25 10
25 20
3616516M1 25 45
3616572M1 60–80
3616573M1 60–80
3616592M91 25 45
3616740M2 70 430
70 440
70 455
70 460
130 85

3616741M1 25 20
30 65
3616742M1 25 20
30 65
30 70
3616745M1 25–20
3616746M1 25–20
3616749M1 25 10
25 20
3616783M1 25 15
25 25
3616827M2 25 45
3616860M1 25 35
3616904M1 30–25
3616905M1 30–25
3616909M1 10 205
10 210
10 215
10 220
3616910M1 10 220
3616911M1 10 205
10–210
10–215
10 220
3617117M1 50 95
3617118M1 40 160
3617180M91 10 5
10 10
10 15
3617193M1 25–15
25–25
3617219M1 25 45
25 60
3617226M1 70 205
70 215
70 220
3617236M1 25 35
3617237M1 25–35
3617238M1 25–35
3617243M1 25 35
3617272M3 25 40
3617281M93 25 45
25 50
3617305M92 70 195
3617308M3 25 35
3617321M1 50–85
3617323M1 50–85

3617343M1 25 15
25 25
3617344M1 25 25
3617345M1 25 15
25 25
3617346M1 25 25
3617347M1 25–25
3617348M1 25–25
3617349M2 25 15
3617352M3 25 10
25 15
25 20
25 25
3617364M1 50 100
3617365M1 50–100
3617367M1 50–100
3617368M1 50 100
3617394M1 110 210
110 215
3617395M1 110 210
110 215
3617401M5 25 10
25–20
3617494M91 120–55
3617574M3 40 150
3617594M93 70 185
70 190
3617596M1 70 185
70 190
3617629M92 110 210
110–215
3617649M91 30–35
30 40
30 45
3617677M12 25 15
3617708M6 20 50
20 60
20 65
3617737M4 25–30
3617744M1 25–35
3617813M1 90 20
3617848M91 110 225
110 230
3617859M1 120 65
3617860M1 120 65
3617865M1 80 30
3617884M1 25–60

3617983M1 10 225
10 230
3618001M3 70 45
3618017M1 110 185
3618103M2 25 35
3618104M1 25 35
3618127M2 70–430
70–440
70 455
70 460
3618157M2 50 75
50 80
3618167M1 50 100
3618168M1 25 45
3618169M1 25–45
3618170M1 25–45
3618239M1 25 110
3618249M1 25 75
25 80
90 115
90 120
3618260M1 100 125
3618261M1 100–125
3618262M1 100–125
3618263M1 100 125
3618264M1 100 125
3618346M1 90 135
3618557M1 20 85
3618603M1 90 115
90 120
3618653M1 90–75
3618662M1 70–55
70 60
70 115
70 120
70 140
3618663M3 70 55
70 60
70–115
70–120
3618680M1 80 35
80 50
80 55
80 60
80 65
80 70
3618683M1 50–65
50–70

3618690M1 10 210
3618713M1 60 5
60 10
3618722M12 25 15
25 25
3618723M10 25 15
25–25
3618738M1 110–90
115 10
3618739M1 110 90
115 10
3618865M1 25 75
25 80
3618871M1 25 75
25–80
3618872M1 25–75
25 80
3618880M1 25 35
3618911M2 25 15
25 25
3618912M2 25 35
3618933M5 25 60
3618934M5 25–40
3618937M3 130–40
3618968M2 25 40
3618970M91 70 5
70 10
3618971M2 70 110
3618974M3 25 30
3618975M5 25 30
3618976M5 25–30
3618996M3 25–30
3618998M3 25 40
3619001M1 30 35
3619014M1 25 10
25 20
3619015M1 25 15
25 25
3619018M91 120–15
3619034M93 25–45
25 50
3619042M3 25 35
3619096M1 25 130
25 140
25 150
130 30
3619144M1 25–15
25–25

3619148M1 50 20
50 90
3619151M1 60 35
3619155M1 20 20
20 25
3619156M1 20 20
20–25
3619191M1 130–85
3619219M1 40 40
40 45
3619220M1 40 25
3619229M2 130 30
130 35
3619236M1 20 20
20–25
3619240M1 25–10
3619241M1 110 25
110 80
110 85
3619243M2 20 35
20 55
20 75
20–80
3619253M2 20–20
20 25
3619257M1 25 10
3619345M1 30 45
3619346M1 30 35
30 40
3619347M92 25 60
3619366M4 25–45
25–50
3619445M1 50 30
3619471M1 110 10
3619473M1 60 50
3619501M1 10 280
10 285
3619551M1 20 50
20–60
20–65
20 105
3619553M1 50 90
3619555M1 50 90
3619589M12 25 10
3619603M1 110 25
3619604M1 110 25
3619605M1 110–25

3619609M1	110 25	3619762M1	20 75	3624903M91	60 75	3637073M1	10 75	3638414M1	10 50	3641648M1	10 95
	110 80		20 80	362782X1	30 50	3637075M91	10 100		10 100	3641654M1	10 110
	110 85		25 75		30 60	3637076M1	10 100	3638435M1	10 135	3641699M1	10 105
3619610M1	110 25		25 80		30 65	3637078M1	10 100	3638444M1	10 140	3641739M1	10 100
3619622M1	10 200		30 60	363510X1	70 65	3637085M1	10 100		10 145	3641756M1	10 50
	10 210		30 65		70 75	3637092M1	10 100	3638445M1	10 110	3641760M1	10 100
	10–220		50–75	3637005M91	10–50		10–130		10–140	3641779M91	10–120
	10–305		50–80	3637006M1	10–50	3637095M1	10–120		10–145	3641787M1	10–80
	10 310		70 65	3637007M1	10 50		10 130	3638499M1	10 75	3641818M1	10 120
	25 110		70 75	3637008M1	10 50		10 135	3638500M1	10 75	3641847M1	10 50
	50 120	3619763M1	20 75		10 65	3637096M1	10 100	3638532M1	10 95		10 100
	80 35		20 80		10 80	3637102M1	10 100	3638562M1	10 120	3641863M1	10 120
	80 105		25 75		10 95		10 140	3638588M1	10 55	3641889M1	10 65
	80 110		25 80		10 100		10 145	3638589M1	10 55	364281X1	30 20
	80–115		30–60		10–105		10–150	3638590M1	10–55	364461X1	40–110
	80–120		30–65		10–130	3637137M1	10–105	3638592M1	10–45		40–115
	80 125		70 65		10 140		10 120	3638640M1	10 65		40 120
	80 140		70 75		10 145		10 125	3638664M1	10 50		40 140
	80 145	3619764M1	50 75	3637011M1	10 65	3637139M1	10 105	3638671M1	10 80		40 145
	90 10		50 80		10 80		10 140	3638684M1	10 120		50 100
	90 15	3619780M1	25 35		10 100		10 155	3638708M1	10 125	364603X1	50 110
	90 20	3619807M1	20 50		10 120	3637157M1	10 105	3638809M1	10 50		50 115
	90–25		20–60		10–125		10–110	3640340M1	10–155		70–80
	90–65		20–65		10–135		10–115	3640628M1	10–130		70–85
	90 100		20 105	3637019M91	10 55	3637171M1	10 110		10 135		70 90
	90 105	3619813M1	40 205	3637020M91	10 55		10 115	3640678M1	10 100		70 95
	90 115		60 15	3637021M91	10 55		10 145	3640868M91	10 50		70 125
	90 120	3619814M1	40 205	3637022M91	10 55	3637173M1	10 110	3640871M1	10 125		70 155
	90 140		60 15	3637023M91	10 55		10 115	3640872M1	10 125		70 215
	100 45	3619824M1	20 75	3637024M91	10 55	3637174M1	10 110	3640876M91	10 120		70 285
	100–50		20–80	3637025M91	10–55		10–115	364105X1	40–5		70–295
	110–45	3619906M1	110–25	3637026M91	10–55	3637199M1	10–130	3641171M91	10–120		70–305
	110 180	3619907M1	110 25	3637027M91	10 55		10 135	3641207M1	10 125		70 315
	110 210	3619908M1	110 25	3637044M1	10 105	3637207M1	10 120	3641208M1	10 125		70 325
	110 215	3619913M1	25 15		10 120	3637217M91	10 155	3641231M1	10 65		70 335
	120 10		25 25		10 125	3637219M1	10 155	364125X1	10 130		70 345
	120 50	3619929M1	50 105		10 130	3637221M1	10 155		10 135		70 355
3619629M1	20 20	3619931M1	10 165		10 135	3637224M1	10 140	3641266M1	10 65		70 365
3619630M1	20–35	3620025M1	80–50	3637046M1	10–130		10–145	3641267M1	10–65		70–375
	20–55		80–55		10–135	3637236M1	10–120	3641284M1	10–65	364704X1	40–175
3619657M1	20 35		80 60	3637048M1	10 80	3637240M91	10 120	3641286M1	10 125		70 85
	20 55	3620026M1	80 40		10 120	3637242M91	10 120	3641287M1	10 125		70 95
3619666M1	20 20		80 45		10 130	3637243M1	10 120	3641291M1	10 120		
	20 25		80 50		10 135	3637247M1	10 120	3641292M1	10 120		
3619673M1	20 35		80 55	3637051M1	10 60	3638256M1	10 80	3641336M1	10 90		
3619728M1	60 5		80 60		10 125	3638329M1	10 120	3641401M1	10 150		
	60–10	3623923M91	60–75	3637066M1	10–75	3638382M1	10–120	3641405M1	10–80		
		3624902M91	60–75	3637067M1	10–75	3638403M1	10–75	3641568M1	10–105		

364735X1 20 50
20 60
20 65
20 105
70 80
70 85
70–90
70–95
70 105
70 130
70 135
70 200
70 210
364777X1 70 45
70–50
70–115
70 120
365139X1 40 70
365233X1 20 60
70 35
70 70
70 80
70–85
70–90
70 95
70 105
70 125
70 225
70 230
70 240
70–245
365801X1 50–90
365916X1 110 165
110 170
365925X1 110 170
366434X1 30 20
60 85
366462X1 70 160
366617X1 70–380
70–385
70 410
366665X1 60 60
367073X1 40 25
367156X1 50 20
367261X1 20 105
70 80
70–90
367277X1 70–140
367386X1 20 70
20 105
70 285
70 295
70 305
70 315
70–325
70–335
70 345
70 355
70 365
70 375
70 395
70 400
367439X1 10–235
10–240
80 135
80 150
80 155
120 25
120 60
368523X1 110 115
110–120
368524X1 10–185
368543X1 10 185
368544X1 110 115
110 120
3697199M1 100 130
3698067M91 110 280
110 285
370087X1 70–115
70–120
3712002M12 50 35
3712058M1 90 40
3712070M12 60 30
3712072M1 60 30
3712073M1 60 65
3712074M1 60 35
60–65
3712076M1 60–65
3712077M1 60 35
60 65
3712078M1 50 75
50 80
60 25
3712081M1 50 75
50–80
3712093M11 60–25
3712170M1 25 25
25 35
3712185M1 120 15
120 25
3712199M91 40 30
3712201M1 10 180
3712204M1 20–35
3712249M1 70–50
70 110
3712250M1 70 30
3712271M1 10 305
3712275M1 25 105
25 110
50 55
3712276M1 40–185
3712277M1 25–105
25 110
50 50
50 55
3712279M3 70 425
70 430
70 435
70–440
70–445
70 450
70 455
70 460
3712280M1 40 185
3712281M3 25 105
25 110
3712282M3 50–50
50–55
3712297M1 20 20
3712300M1 20 20
20 25
3712304M1 20 35
20 40
3712307M1 20 75
3712323M2 20–75
3712347M2 25–10
25 20
3712354M1 25 15
25 25
3712358M1 20 50
20 60
3712399M1 70 30
3712404M1 20–45
3712408M1 110 80
110 85
3712410M1 110 80
110 85
3712412M1 110 80
110 85
3712413M2 110–80
110–85
3712414M1 110 80
110 85
3712417M1 110 90
3712419M1 110 90
3712419M2 110 90
3712420M1 110 90
3712420M2 110–90
3712421M2 110–80
110 85
3712430M1 25 10
25 20
3712431M1 25 10
25 20
3712464M1 10 205
10–210
10–215
10 220
10 225
10 230
10 235
10 240
3712479M1 25 10
25–20
3712495M1 10–185
3712526M1 10 185
3712540M1 70 285
70 295
70 305
70 315
70 325
70–335
70–345
70 355
70 365
70 375
3712543M93 20 85
3712546M1 10 165
3712578M1 130 15
3712587M1 130–15
3712590M1 130–10
3712606M1 110 55
3712607M2 110 55
3712608M1 110 55
3712609M3 110 165
3712611M2 130 10
130 15
130–20
130–25
130 70
3712626M1 130 80
3712661M1 80 50
80 55
80 60
80 65
80–70
110–225
110 230
3712664M1 20 35
20 55
3712665M1 20 35
20 55
3712668M2 70 55
70–60
70–115
70 120
3712685M18 20 50
20 60
20 75
3712689M1 70 80
70 85
70–90
70–95
70 130
3712691M1 25 15
25 25
70 295
3712693M1 100 30
100 35
100 40
100–55
3712707M1 70–80
70 85
70 90
70 95
70 130
3712719M1 20 20
20 25
20–20
20–25
3712724M1 90 10
90 15
90 20
90 25
3712725M1 90 10
90 15
90–20
90–25
3712726M1 90 10
90 15
90 20
90 25
3712728M3 40 5
3712744M1 110 175
110–180
3712752M5 110–55
110 60
3712809M2 100 30
100 35
100 40
100 55
3712813M11 20 35
3712815M11 20–20
3712819M11 20–20
20 25
3712820M12 20 20
3712831M2 110 65
3712832M1 110 65
3712833M2 110 65
3712847M94 25 60
3712851M91 10–290
10–295
3712852M2 10 290
10 295
3712855M3 110 295
3712856M1 110 295
3712857M2 110 295
3712859M1 110 295
3712860M1 110–295
3712861M1 110–295
3712862M1 25 75
25 80
3712866M2 10 290
3712867M1 10 290
10 295
3712872M1 60 65
3712873M1 60–65

3712886M1 10 290
10 295
3712899M1 110 295
3712906M91 20 50
20 60
3712909M91 20 50
20–60
3712911M91 20–50
20 60
20 65
3712912M1 25 130
25 140
25 150
3712925M1 110 80
110–85
3712956M3 70–415
70 420
70 425
70 430
70 435
70 440
3712959M1 110 35
3712960M1 110–40
3712976M2 25–105
25 110
40 190
50 50
50 55
50 60
70 465
70–470
90–35
3712979M2 70 415
70 420
70 425
70 430
70 435
70 440
70–445
70–450
70 455
70 460

3712980M2 70 415
70 420
70 425
70 430
70 435
70 440
70–445
70–450
70 455
70 460
3712981M2 70 415
70 420
70 425
70 430
70–435
70–440
70 445
70 450
70 455
70 460
3712984M1 25 105
25 110
40–185
50–50
50 55
110 80
110 85
3712989M2 25 90
25 105
25 110
50–60
3713025M6 10–300
3713042M1 10 290
10 295
25 115
40 185
3713072M4 90 50
110 55
110–60
3713090M1 80–50
80 60
3713103M1 80 30
3713113M2 90 130
3713121M1 90 115
3713127M1 110 225

3713129M1 80 105
80 110
80 115
80 120
3713130M91 120 40
120 45
120–50
3713132M91 120–40
120 45
3713134M91 120 40
120 50
3713137M1 120 40
120 45
3713138M1 110 295
3713139M1 110–295
3713140M1 110–295
3713142M2 80 30
3713145M1 80 130
3713146M1 110 165
120 65
3713147M1 110 195
3713148M2 80 30
3713149M2 80–30
3713151M1 25–150
80 30
110 55
110 60
110 165
110 195
120 40
120–45
120–55
120 60
120 65
3713152M1 110 55
110 60
3713153M1 110 55
110 60
3713158M1 110–30
3713159M1 110–30
3713160M91 110 35
3713161M1 110 35
3713163M1 110 30
3713164M1 110 30
3713165M1 110 30
3713166M2 110 30
3713167M1 110–30
3713195M1 110–195

3713196M2 110 195
3713226M1 110 75
3713260M1 120 65
3713289M1 110 5
3713290M1 110 5
3713291M1 110 5
3713292M1 110–5
3713331M1 80–130
3713339M1 120 40
3713341M1 120 40
120 45
3713348M1 90 105
90 125
90 130
3713349M1 90–105
90–125
90 130
3713356M1 110 225
3713357M1 110 225
110 230
3713364M1 110 220
3713373M4 110 120
3713374M1 110–125
110–135
110 140
3713375M2 110 115
110 125
110 150
110 155
3713385M1 80 5
80–10
80–15
80 20
3713388M91 20 75
3713394M11 20 75
3713395M11 20 75
3713396M12 20 75
3713403M1 80 30
3713404M1 120–15
120–65
3713405M2 120 65
3713409M1 20 85
3713445M1 50 75
50 80
3713461M1 110 125
3713462M1 110 115
3713469M1 110–125
110–130

3713470M1 110 115
3713473M1 20 75
3713477M2 25 45
3713478M1 25 45
3713479M3 25 45
3713480M1 25 45
3713481M1 25–45
3713483M1 25–45
3713500M2 110 80
110 85
3713501M1 110 80
110 85
3713519M12 60 50
3713522M1 120 30
3713532M3 110–165
3713550M1 110–90
115 10
3713553M1 60 50
3713554M1 60 50
3713556M3 80 85
80 90
80 95
80–100
3713557M1 20–75
3713561M96 70 195
3713562M96 70 185
70 190
3713576M1 70 175
70 180
3713587M1 25 105
25–110
40–185
50 55
50 60
110 45
110 80
110 85
120 50
3713615M1 110–115
3713616M1 110–80
110 85
3713621M1 110 55
3713633M1 20 50
20 60
3713635M1 110 45
110 165
110–170

3713669M2 70 20
70 25
3713670M1 70 20
3713680M1 70 20
3713686M11 25 10
3713696M1 120 15
3713698M1 100–100
3713699M1 100–80
100 125
3713700M1 100 105
3713701M1 100 110
3713702M1 100 115
3713704M3 100 100
3713705M3 100 80
100–125
3713706M3 100–105
3713721M3 100 110
3713722M3 100 115
3713738M2 110 195
3713741M1 110 195
3713742M1 80 155
110 195
3713744M1 110–165
110–170
3713745M1 110 125
110 130
3713746M1 110 165
110 170
3713764M1 40 35
40 40
40–45
3713782M2 90–105
90 125
3713785M1 70 20
70 25
3713802M1 110 30
3713803M1 110 70
120 40
3713805M1 10–270
10–275
3713807M91 25 125
3713812M1 80 50
3713868M2 70 10
70 15
3713870M93 110 95
3713881M92 110 95
3713884M93 110–95
3713896M5 110–95

3713897M5	110 95	3714124M1	10 270	3714316M2	120 5	3714646M1	70 415	3714886M1	90 105	3715112M1	130 85
3713898M5	110 95	3714135M1	90 10	3714317M2	120 5		70 420		90 125	3715118M1	110 295
3713899M3	110 95		90 15	3714330M2	10 230		70 425		90 130	3715122M2	70 320
3713905M1	70 415		90 20		10 240		70 430	3714887M92	80 130		70 360
	70 420		90 25	3714371M91	120 15		70 435	3714916M1	90 50		70 370
	70 425	3714137M1	90 10		120 25		70 440	3714918M2	90 50	3715129M1	80 140
	70–430		90–15	3714399M92	120–5		70–445	3714919M1	90–50		80–145
	70–435		90–20		120–60		70–450		110–55	3715130M1	80–140
	70 440		90 25	3714416M2	60 65		70 455		110 60		80 145
	70 445		90 45	3714426M1	120 40		70 460	3714925M1	25 75		80 150
	70 450	3714138M1	90 10	3714445M1	70 185	3714650M94	70 5		25 80		80 155
	70 455		90 15		70 190	3714660M1	90 55	3714935M1	25 75	3715142M1	25 130
	70 460		90 20	3714448M94	110 95	3714661M1	90 55		25 80		25 140
3713911M92	120 25		90 25	3714453M1	70 45	3714662M1	90 55	3714944M1	10 20		25 150
3713912M91	120–25	3714143M1	110–115	3714454M1	10–175	3714663M1	90–55		10–30		110–55
3713927M4	70–300		110–120	3714481M1	110–80	3714664M1	90–55	3714953M1	70–335		110–60
	70 340	3714144M1	110 115		110 85	3714665M1	90 55		70 345		110 80
	70 370	3714145M1	25 80	3714482M1	110 80	3714666M1	110 80		70 355		110 85
3713928M3	150 40	3714184M92	120 5		110 85		110 85		70 365		110 90
3713928M5	70 290		120 10	3714488M3	20 85	3714681M1	110 5		70 375		110 210
	70 300	3714185M91	120 10		20 90	3714694M1	110 120	3714956M1	70 285		110 215
	70 310	3714209M1	110 90		20 95		120 40		70 295		115 10
	70–330		115–10		70–175		120–45		70–305	3715143M1	110–80
	70–340	3714223M1	70–415		70–180		120–50		70–315		110–85
	70 350		70 420	3714515M1	110 225		120 65		70 325		110 90
	70 360		70 425	3714516M1	110 225	3714784M1	130 15		70 335		115 10
	70 370		70 430	3714529M1	110 80	3714786M1	130 10		70 345	3715144M92	120 65
3713930M1	60 25		70 435		110 85	3714794M1	10 220		70 355	3715149M2	110 295
3713939M1	60 35		70 440	3714530M12	50 90	3714804M1	40 80		70 365	3715151M2	110 295
3713940M1	60 35		70 445	3714535M13	50 85	3714805M1	40 80		70 375	3715170M1	110 80
3713952M91	120–25		70–450		50–90	3714828M1	10–230	3714981M15	30–50		110–85
3713954M1	120–25		70–455	3714538M1	110–175		10–240	3714982M4	30–50		110–295
3713984M1	20 5		70 460		110 180	3714845M1	80 105	3714996M1	100 130	3715179M2	110 80
3714029M94	100 40		70 465	3714539M92	25 110		80 110	3715011M1	100 130		110 85
3714072M91	110 200		70 470	3714566M1	110 225		80 115	3715012M1	100 130	3715185M2	50 50
	110 205	3714235M1	110 80		110 230		80 120	3715013M2	100 130	3715248M1	50 95
3714076M2	110 165		110 85	3714575M1	60 65	3714846M1	110 165	3715063M1	100 130		50 100
3714077M1	110 165	3714238M94	25 35	3714645M1	70 415	3714857M1	120 5	3715064M1	100 130	3715364M1	70 425
3714080M92	110–185	3714246M1	110–115		70–420	3714858M1	120–5	3715065M1	100–130		70–440
3714088M93	110–30		110–120		70–425	3714871M1	110–125	3715067M1	100–130		70–445
3714090M1	110 30	3714262M1	90 60		70 430	3714872M1	110 125	3715068M1	100 130		70 455
3714101M1	110 295	3714264M1	90 60		70 435	3714873M1	110 125	3715069M1	100 130	3715365M1	70 415
3714102M1	110 295	3714288M1	10 230		70 440		110 130	3715072M1	100 130		70 425
3714109M1	25 45		10 240		70 445	3714874M1	10 200	3715073M91	110 225		70 440
3714113M1	120 15	3714290M2	90 65		70 450	3714884M1	110 65		110 230		70 445
3714118M1	110 195		90 70		70 455		110 70	3715099M1	110 210		70 455
3714119M1	110–195	3714291M2	90–65		70–460	3714885M1	110–65	3715100M1	110–210	3715366M1	70–445
3714120M2	110–195		90–70				110–70	3715111M91	130–85		70–455

3715367M1 70 415
70 425
70 440
70 445
70 455
3715413M1 80 30
3715419M1 30–60
3715422M1 110–65
3715426M13 50 90
3715435M1 100 35
3715436M1 100 35
3715438M1 110 15
3715459M1 70 430
70 440
70–455
70–460
90 35
3715463M1 90 35
3715466M1 70 430
70 440
70 455
70 460
90–35
3715467M1 90–35
3715469M1 90 35
3715470M1 90 35
3715471M1 90 35
3715482M1 115 15
120 25
3715483M1 50 50
50–55
3715489M3 50–50
3715495M1 40 185
70 415
70 420
70 425
70 430
70 435
70–440
70–445
70 450
70 455
70 460

3715496M1 40 185
70 415
70 420
70 425
70 430
70 435
70–440
70–445
70 450
70 455
70 460
3715497M1 70 415
70 420
70 425
70–430
70–435
70 440
70 445
70 450
70 455
70 460
3715498M1 70 425
70–430
70–435
70 440
70 445
70 450
70 455
70 460
3715499M1 70 445
70–450
70–455
70 460
3715534M1 25 95
3715537M1 60 10
3715539M1 60 35
3715581M3 100 120
3715582M3 100 120
3715583M1 100–120
3715584M1 100–120
3715585M1 100 120
3715586M1 100 120
3715587M1 50 50
100 120
3715588M1 100 120
3715589M1 100 120
3715590M1 100–120
3715591M1 100–120

3715610M1 110 195
3715616M1 70 50
70 110
3715618M1 70 50
70 110
3715619M1 70 50
70–110
3715621M92 70–50
3715676M1 110 65
3715677M1 110 65
3715678M1 110 65
3715679M1 110 65
3715681M3 40 25
3715685M91 40 25
3715689M1 40–20
40–25
3715690M1 40 20
40 25
3715691M1 40 20
40 25
3715695M4 60 25
60 30
3715702M2 80–55
80–70
3715771M14 25 65
25 70
3715772M91 70 45
3715773M1 70 45
3715785M2 25 65
25 70
3715817M91 120–15
120–25
3715822M4 70 20
3715828M91 40 20
3715849M1 40 25
3715878M3 70 225
70 230
70 235
70–240
70–245
3715880M1 70 225
70 230
70 235
70 240
70 245

3715881M1 70 225
70 230
70 235
70 240
70 245
3715882M1 70 225
70–230
70–235
70 240
70 245
3715923M91 120 35
3715925M1 120 35
3715926M1 100 30
100 35
100–40
100–55
3715927M1 80 5
80 10
80 15
80 20
3715934M1 90 10
90 15
90–20
90–25
90 45
3715941M1 30 25
3715942M1 30 25
3715943M1 30 25
3715975M3 40 185
40 190
3715991M1 110–80
110–85
3715994M2 70 55
70 60
3715996M1 80 35
3716000M5 30 30
3716001M2 50 35
3716002M2 50 40
50–45
3716003M2 50–35
50 40
50 45
3716004M2 50 35
3716005M1 50 40
50 45
3716006M1 50 40
50–45

3716007M1 50 35
50 40
50 45
3716009M13 50 40
50 45
3716012M12 50 40
50–45
3716014M2 50–35
50 40
50 45
3716016M1 50 70
3716017M1 50 35
50 40
50 45
3716018M1 50–70
3716019M1 50–70
3716021M1 50 65
50 70
3716022M1 50 35
50 40
50 45
3716023M2 50 35
3716024M1 50–40
50–45
3716025M2 50 40
50 45
3716027M2 50 40
50 45
3716028M1 50 35
50 40
50–45
3716029M2 50–65
3716030M1 50 20
3716033M1 50 20
3716034M1 50 20
3716037M1 50 35
50 40
50 45
3716038M1 50–35
50–40
50 45
3716042M1 90 40
3716043M3 50 65
3716045M4 50 65
3716049M1 50 40
3716053M1 50 35
50–40
50–45

3716054M1 50 35
50 40
50 45
3716057M13 50 40
50 45
3716059M4 30 55
3716061M12 50–20
3716063M14 50–20
3716064M1 50 20
3716067M2 60 50
3716068M3 50 65
3716070M2 50 65
3716071M1 50 65
50 70
3716072M1 50–70
3716073M1 50–70
3716074M1 50 70
3716075M2 50 65
3716079M3 50 35
3716080M1 50 20
3716082M4 30 40
30 45
3716083M3 30–40
30–45
3716103M2 40 125
40 130
40 135
40 140
40 145
3716106M3 130 70
3716121M1 40–125
3716129M3 40–20
40 25
3716137M1 40 160
3716138M1 40 160
3716140M1 40 160
3716141M1 40 160
3716143M1 40 160
3716144M1 40–160
3716148M1 40–15
3716151M2 20 35
3716171M92 20 50
20 65
3716180M1 50 25
3716181M1 50 25
3716182M3 25 5
3716195M1 70–55
70–60

3716228M1	30 20
3716237M3	25 60
3716238M4	25 100
3716239M2	25 65
	25 70
3716240M3	25 100
3716252M1	30–35
	30–40
	30 45
3716281M1	25 60
3716282M1	25 60
3716283M1	25 60
3716284M1	25 60
3716285M1	25 60
3716286M1	25–60
3716287M2	20–80
	25 25
	25 65
	25 70
3716288M1	50 40
	50 45
3716290M12	50 40
	50–45
3716306M91	40–125
3716309M13	30 65
3716310M1	30 15
3716314M1	70 280
	70 290
	70 300
	70 310
	70–330
	70–340
	70 350
3716315M1	70 320
	70 360
	70 370
3716316M1	70 280
	70 290
	70–300
	70–310
	70 320
	70 330
	70 340
	70 350
	70 360
	70 370
3716317M93	70–280
	70–285
3716318M93	70 290
	70 295
3716319M93	70 300
	70 305
3716320M93	70 310
	70 315
3716321M93	70–320
	70–325
3716322M93	70 330
	70 335
3716323M93	70 340
	70 345
3716324M93	70 350
	70 355
3716325M1	70–380
	70–385
3716327M3	30 55
3716331M4	30 60
3716332M4	30 50
3716334M1	70 140
3716335M1	30 35
	30 40
	30–45
	30–50
	30 55
	30 60
	30 65
	30 70
3716339M2	50 5
3716340M2	50 5
3716348M91	25–165
3716351M1	70–45
3716355M1	70 60
	70 115
3716357M1	70 55
	70 60
	70 115
	70 120
3716358M1	70–140
3716360M1	25–5
3716365M1	70 50
3716366M1	70 290
	70 300
	70 310
	70 320
3716367M1	70 330
	70 340
	70 350
	70 360
	70 370
3716370M2	70 50
3716371M1	70–55
	70–60
3716375M91	70 45
3716376M92	70 50
	70 115
	70 120
3716377M91	70 50
	70 115
	70–120
3716382M1	70–270
3716383M1	40 10
	70 270
3716385M1	40 10
	70 270
3716393M93	70 360
	70 365
3716394M93	70–370
	70–375
3716396M1	70 410
3716396M2	70 410
3716397M1	70 80
	70 85
	70 90
	70 95
	70–380
	70–385
3716398M1	70 285
	70 295
	70 305
	70 315
	70 325
	70 335
	70–345
	70–355
	70 365
	70 375
3716399M1	70 100
	70 135
3716406M94	30 50
3716411M2	30 15
3716413M4	30–5
3716414M4	30–10
3716415M1	25 85
	25 95
3716418M1	50 10
3716420M1	50 10
	50 15
3716421M2	50 10
3716422M1	30–50
	30–55
3716430M2	30 50
	30 55
3716431M2	30 50
	30 55
3716432M2	30 50
	30 55
3716433M2	30–50
	30–55
3716434M2	30 50
	30 55
3716441M2	60 50
3716442M1	25 85
	25 95
3716447M2	25 85
	25–90
3716449M1	25–85
	25 90
3716450M1	30 50
	30 55
3716452M4	60 50
3716453M15	60 50
3716459M3	25 95
3716460M1	50–10
3716463M1	30–55
3716464M4	30 55
3716467M1	30 70
3716470M2	30 55
3716472M3	30 55
3716473M3	30 55
3716474M4	30 55
	30–70
3716477M2	30–15
3716479M1	30 70
3716480M1	30 70
3716486M1	30 70
3716489M1	50 10
3716496M2	30 30
	50 15
3716499M1	40 35
	40 40
	40 45
	40 130
	40 135
	40 140
	40–145
3716501M1	30–15
3716502M2	30 15
	30 25
3716503M2	30 15
3716506M13	40 5
3716510M2	40 5
3716511M13	40 5
3716513M4	40–5
3716514M1	30–40
	30 45
3716515M1	30 35
3716521M14	40 5
3716522M2	40 5
3716526M11	60 50
3716527M13	40 5
3716531M4	60–50
3716538M2	40–5
3716539M1	30 15
3716540M1	30 15
3716542M1	30 15
3716543M1	30 15
	30 25
3716544M1	30 15
3716548M1	30–20
3716551M4	30–20
3716553M2	60 50
	60 55
3716554M2	30 15
3716560M1	30 15
3716561M1	30 15
3716562M12	30 70
3716563M2	60–50
	60–55
3716564M2	50 10
3716566M1	30 50
	30 55
3716567M1	30 50
	30 55
3716568M1	30 50
	30–55
3716569M1	30 50
	30 55
3716571M2	30 60
	30 65
	30 70
3716572M1	60 50
	60–55
3716573M1	60–50
	60 55
3716580M3	30 70
3716581M3	90 40
3716601M93	40 10
3716609M1	40 10
3716616M1	40 5
3716619M3	40–125
	40–130
	40 135
	40 140
	40 145
3716621M2	40 125
	40 130
	40 135
	40–140
	40–145
3716622M1	40 125
	40 130
	40 135
	40 140
	40 145
3716624M1	40 35
	40–40
	40–45
	40 125
	40 130
	40 135
	40 140
	40 145
3716627M2	40 10
3716631M94	40–125
3716640M91	50–65
	50 70
3716643M1	50 65
	50 70
3716661M1	40 15
3716680M2	40 10
3716682M2	40 10
3716689M1	40–5

3716693M92	50 65	3716821M2	25 85	3716938M3	70 45	375738X1	10 110	3764225M1	60 85	3764965M91	60 85
	50 70		25 90	3716943M2	40 205		10 115	3764226M1	60 85	3764967M91	60 85
3716696M91	50 65	3716835M3	25 90		60 15	375750X1	10 140	3764227M1	60 85	3764970M91	60 85
	50 70	3716837M1	25 85	3716944M2	40 205		10 145	3764228M1	60 85	3764971M91	60 85
3716703M15	70 50	3716838M2	25 85		60 15	375751X1	10 140	3764229M1	60 85	3764973M1	60 85
3716727M92	20 35	3716840M11	25 85	3716945M1	25 5		10 145	3764230M1	60 85	3764974M1	60 85
3716728M2	20–45	3716843M1	25–85		30–10	375782X1	10–80	3764231M1	60–85	376501X1	10–120
3716732M11	70–110	3716845M1	25–85	3716948M93	40–50	375837X1	10–80	3764232M1	60–85	376521X1	10–105
3716735M1	70 110		25 90	3716954M92	40 55	3759758M92	70 5	3764233M1	60 85		10 140
3716737M1	70 115	3716846M3	25 85	3716969M92	40 105		70 10	3764234M1	60 85		10 145
	70 120	3716847M2	25 85		40 115	3760032M1	110 225	3764235M1	60 85	376524X1	10 105
3716737M2	70 115	3716851M3	30 65	3716970M92	40 105	3760678M1	110 290	3764236M1	60 85		10 115
	70 120	3716853M14	30 65		40 110	3760697M1	80 50	3764237M1	60 85		10 140
3716738M1	70 110	3716854M1	30 65		40 120		80 55	3764238M1	60 85		10 145
3716739M1	70–110	3716855M3	30–65	3716978M1	40–15		80–60	3764239M1	60–85	376525X1	10–75
3716741M1	70–110	3716856M2	30–65	3716979M1	40–15		80–65	3764240M1	60–85	376526X1	10–140
3716742M1	70 110	3716857M1	30 65	3716983M3	40 35		80 70	3764241M1	60 85		10 145
3716743M1	70 110	3716858M1	30 65		40 40		80 95	3764242M1	60 85		10 225
3716744M1	70 115	3716859M1	30 65		40 45		80 105	3764243M1	60 85		10 230
	70 120	3716860M1	30 65	3716984M3	40 35		80 110	3764286M1	60 70		10 235
3716745M1	70 115	3716862M3	25 85		40 40		80 115	3764466M1	60 85		10 240
	70 120		25 90		40 45		80 120	3764700M1	60 70	3765790M91	60 85
3716746M1	70–110	3716869M3	25–90	3716994M2	40–35		80–125	3764822M1	60–90	376606X1	10–50
3716747M1	70–110	3716879M91	70–145		40–40		80–130	3764823M1	60–90		10–60
3716748M1	70 115		70 150		40 45		80 135	3764828M1	60 90		10 100
	70 120	3716884M91	70 145	3716995M2	40 35		80 140	3764839M1	60 90		10 130
3716758M3	30 40		70 150		40 40		80 145	3764840M1	60 90		10 135
	30 45	3716900M5	70 380		40 45		80 150	3764851M1	60 85	376616X1	10 50
3716770M1	30 35		70 385	3716997M14	40 35		80 155	3764853M91	60 90	376656X1	10 65
	30 40		70 410		40 40		80 160	3764855M91	60 90	376670X1	10 50
	30–45	3716901M1	70–140		40–45	376077X1	10–95	3764857M1	60–90	3771353M1	25–35
3716772M91	70–145	3716902M1	70–140	3716998M14	40–35	376123X1	10–75	3764858M1	60–90		25–55
	70 150	3716903M1	70 140		40 40	376137X1	10 75	3764859M1	60 90		25 60
3716773M2	40 150	3716907M92	70 140		40 45	376178X1	10 60	3764860M1	60 90	3771354M1	25 35
	40 155	3716910M1	70 250	372543X1	20 50	376180X1	10 50	3764872M91	60 90		25 55
3716774M2	40 150	3716911M1	70 250		20 60	3764103M1	60 85	3764873M91	60 90		25 60
	40 155	3716912M1	70 250		20 65	3764160M1	60 85	3764874M1	60 85	3771355M1	25 35
3716780M92	20 105	3716913M1	70 250	373215X1	20 75	3764202M1	60 70	3764875M1	60 90		25 55
	70–80	3716914M92	70–380	373778X1	70–250	3764203M2	60–90	3764878M1	60–90		25–60
	70–90		70–385	373784X1	70–400	3764216M1	60–85	3764881M1	60–90	3771408M1	25–70
3716801M1	60 50	3716917M3	30 30	373793X1	70 140	3764217M1	60 85	3764882M1	60 90		25 80
3716802M1	60 50	3716918M2	30 30	373796X1	70 400	3764218M1	60 85	3764883M91	60 90		25 115
3716803M1	60 50	3716920M91	30 15	375048X1	70 140	3764219M1	60 85	3764885M1	60 90		25 120
3716804M1	60 50	3716932M1	30 15	375102X1	40 110	3764220M1	60 85	3764886M1	60 90	3771550M1	120 5
3716807M1	50 10	3716933M1	30 15		40 115	3764221M1	60 85	3764955M91	60 70		120 10
3716810M1	60 50	3716934M1	40 5		40 120	3764222M1	60 85	3764961M1	60 90	3771996M1	120 5
	60–55	3716936M4	30–35		40–140	3764223M1	60–85	3764962M1	60–90		120–10
3716815M3	60–50	3716937M4	30–35		40–145	3764224M1	60–85	3764963M1	60–90		

3772121M91	110 280	3777308M1	10 270	3777564M2	50 100	3777712M1	110 130	3778045M2	70 215	3778296M96	10 210
	110 290		10 275	3777567M1	80 30	3777716M1	130 30		70 230	3778297M1	10 210
377218X1	70 100	3777309M1	10 270	3777568M2	90 10	3777737M1	110 115		70 245	3778298M1	10 250
	70 200		10 275		90 15	3777739M91	20 85	3778052M1	110 5	3778304M1	110 30
	70 210	3777324M11	150 80		90 20	3777741M1	110 115	3778055M1	110 80	3778313M1	110 75
377353X1	70 140	3777332M11	150 65		90 25	3777744M1	110 115		110 85	3778314M1	110 75
377378X1	20–85	3777369M2	100–30	3777572M1	115–5	3777801M1	10–205	3778063M2	10–270	3778315M1	110–205
377424X1	25–85		100–40	3777574M1	115–5		10–210	3778068M1	110–45	3778317M1	10–250
	25 90		100 55	3777575M2	120 10		10 215	3778069M1	110 45	3778321M1	110 120
377494X1	20 20	3777370M2	100 30	3777576M1	120 10		10 220	3778070M1	110 45		110 130
	20 35		100 40	3777577M1	115 5		10 230	3778071M1	110 45	3778322M1	110 45
	20 50		100 55	3777578M1	115 5		10 235	3778072M1	110 45	3778335M1	110 180
	20 55	3777377M2	110 100	3777579M1	115 5		10 240	3778073M3	110 170	3778337M91	100 30
	20 60	3777378M3	110 100	3777586M2	130 30	3777837M1	10 270	3778091M1	110 245		100 35
	20–65	3777384M94	10–205		130–35	3777839M1	10–270	3778092M1	110–245	3778359M1	110–180
	30–60	3777386M93	10–210	3777587M2	130–30	3777881M1	10–185	3778093M91	120–65	3778361M1	110–130
	30 65	3777389M2	10 205		130 35	3777884M1	10 210	3778094M1	120 65	3778366M2	110 130
	30 70	3777390M2	10 215	3777588M1	130 30	3777938M1	80 35	3778108M1	110 210	3778369M2	10 270
	60 50	3777391M1	10 205	3777589M1	130 30	3777982M2	115 5	3778115M2	110 145		10 275
377602X1	50 95		10 215	3777590M1	130 30	3777983M2	115 5	3778116M4	110 120	3778374M11	150 65
377651X1	20 50	3777392M3	10 210	3777591M1	130 30	3777984M1	120 55		110 130	3778375M2	20 95
	20 60	3777396M1	110 45	3777602M2	110 15	3777985M1	120 55		110 160	3778376M2	10 255
	20–65	3777397M1	110–75	3777603M1	110–90	3778011M1	110–60	3778212M1	80–130		10–260
	20–105	3777398M1	110–75	3777604M1	110–90	3778013M3	110–170	3778213M2	80–135	3778385M1	10–250
	70 145	3777399M1	110 75	3777606M1	110 90	3778017M1	110 175	3778240M92	100 30	3778390M2	110 280
3777000M1	120 15	3777402M1	110 60	3777607M1	110 190		110 180		100 35	3778391M1	120 40
	120 20	3777412M1	70 225	3777608M1	110 190	3778018M11	60 35	3778242M1	100 30		120 45
3777015M1	10 305		70 230	3777613M1	110 115	3778020M11	60 35	3778251M1	110 85		120 50
	10 310		70 235	3777614M1	110 115	3778023M1	120 65	3778252M2	110 85		120 55
3777017M2	100 80		70 240	3777616M1	110 115	3778024M1	120 65	3778253M2	110 85		120 60
	100–85		70–245	3777618M3	90–110	3778025M1	120–65	3778258M1	110–190	3778396M1	90–35
	100–95	3777417M1	100–30	3777628M1	90–140	3778028M2	70–235	3778259M1	110–190	3778397M1	90–35
	100 125		100 35	3777629M1	80 125	3778029M2	70 235	3778279M1	70 225	3778398M1	90 35
3777018M1	100 85		100 40	3777630M1	80 160	3778030M2	70 225		70 230	3778399M2	10 310
	100 95		100 55	3777648M1	110 190	3778031M2	70 225		70 235	3778400M1	10 310
3777019M1	100 90	3777486M1	115 15	3777649M1	110 190	3778032M2	70 230		70 240	3778401M1	40 190
	100 95		120 25	3777696M3	80 115	3778033M2	70 230		70 245	3778402M3	70 465
3777020M1	100 85	3777520M1	80 95		80 120	3778034M3	70 220	3778280M1	70 225	3778403M3	70 465
	100–95	3777521M1	80–80	3777698M92	110–190		70–235		70–230	3778404M3	70–470
3777021M2	100–85	3777527M1	80–55	3777699M2	110–190	3778035M2	70–230		70–235	3778405M2	50–60
	100 95		80 60	3777700M2	110 190	3778040M2	70 225		70 240	3778406M2	50 60
3777022M1	40 150	3777529M5	80 145	3777706M1	110 205		70 240		70 245	3778407M2	10 310
3777078M1	10 180	3777531M1	80 50	3777707M1	110 120	3778041M3	70 225	3778289M1	110 45		70 465
3777157M2	20 90		80 55	3777708M1	110 120		70 240	3778290M1	110 45	3778408M4	50 60
	20 95		80 60	3777709M1	110 45	3778042M2	70 230	3778294M2	100 30	3778409M1	50 60
3777216M1	60 65		80 65	3777710M1	110 45		70 245		100 35	3778410M1	50 60
3777219M2	60–65		80–70	3777711M1	110–130	3778043M3	70–230	3778295M2	100–30		
		3777563M2	50–100		110–180		70–245		100–35		

3778411M1 40 190
50 60
70 465
70 470
3778412M1 50 60
70 470
3778413M6 115–15
3778414M1 90–35
3778415M1 50 60
3778416M1 90 35
3778418M1 40 190
3778426M1 110 85
3778428M92 120 20
3778445M91 110 95
3778447M91 110–100
3778448M92 110–100
3778449M93 110 100
3778452M1 30 25
3778453M2 30 25
3778456M92 120 60
3778478M92 30 25
3778479M1 110 80
110–85
3778480M91 25–105
25 110
40 185
50 50
50 55
70 415
70 420
70–425
70–430
70 435
70 440
70 445
70 450
70 455
70 460
3778481M2 70–415
70–420
70 425
70 435
70 445
70 450
3778482M2 70 415
70 420
70 425
70 430
70 435
70 440
70–445
70–450
70 455
70 460
3778483M2 70 425
70 430
70 435
70 440
70–445
70–450
70 455
70 460
3778484M3 70 445
70 450
3778486M1 70 415
70 420
3778487M1 70–425
70–430
70 435
70 440
3778488M1 70 445
70 450
70 455
70 460
3778497M2 110–125
3778504M93 90–10
3778505M92 90 10
90 15
3778506M1 110 80
110 85
3778510M94 90 10
90 15
90–20
90–25
90 30
3778514M1 80 75
3778515M1 80 90
3778516M12 60 25
3778517M1 25 130
25 140
25–150
3778518M2 25 140
25 150
3778519M1 25 130
25 140
25 150
3778520M1 25 130
25–140
25–150
3778521M1 25 130
25 140
25 150
3778528M2 25 130
25 140
25 150
3778531M1 10–210
3778560M2 70–425
70 440
70 445
70 455
3778562M2 50 30
3778566M2 70 415
70 420
70–425
70–430
70 435
70 440
70 445
70 450
70 455
70 460
3778583M2 10–305
3778585M1 70–225
70 230
70 235
70 240
70 245
3778586M2 70 230
70 235
70–245
3778588M1 70–35
70 40
3778589M1 70 35
70 40
3778590M2 70 35
70 40
3778627M1 120 55
3778630M91 100–45
3778639M1 10 305
10 310
3778645M94 10 305
3778652M2 90 95
3778658M1 110 125
3778659M1 110 125
3778660M92 120–20
3778663M1 70–240
70 245
3778664M2 70 240
70 245
3778665M1 70 220
70 235
3778672M1 25 130
25–140
25–150
3778674M2 25 130
25 140
25 150
3778685M93 80 15
3778688M1 10 280
3778701M3 90 50
90–60
3778702M1 90–10
90 20
90 25
3778703M1 110 75
3778704M1 110 45
3778705M1 110 75
3778706M1 110 75
3778707M1 90–10
90–15
90 20
90 25
3778708M1 90 10
90 15
90 20
90 25
3778710M1 110–45
3778711M1 110–45
3778712M93 70 205
70 215
70 220
3778718M92 70 205
70 215
70 220
3778722M93 90–95
3778733M2 10–205
3778737M1 80 60
3778741M2 30 25
3778744M91 110 75
3778745M1 110 75
3778746M1 110 75
3778747M1 25 130
3778749M1 110–170
3778761M1 10–210
3778766M1 70 205
70 215
70 220
3778767M1 70 205
70 215
70 220
3778781M1 10–210
3778784M1 110–75
3778785M1 110 75
3778789M1 110 100
3778790M1 110 80
110 85
3778806M1 80 100
3778808M1 90 10
90–15
90–20
90 25
115 15
3778809M1 10 270
3778811M1 120 15
3778813M1 60 35
3778841M1 120 5
3778855M1 115–5
3778857M93 115–5
3778868M2 115 15
3778874M2 10 205
3778876M1 115 5
3778877M1 115 5
3778881M2 120 10
3778883M2 115 5
3778886M1 115–5
3778897M1 110–105
3778898M1 110 105
3778926M1 115 10
3778927M1 115 10
3778928M1 115 10
3778928M2 115 10
3778929M1 115 10
3778929M2 115–10
3778930M1 115–10
3778931M1 115 5
3778985M1 25 125
3778990M1 10 185
10 255
10 260
3778991M1 10 185
3778994M1 100–60
3779009M1 70–465
70 470
3779022M1 10 5
3779023M1 10 15
3779042M1 70 25
3779043M91 80 40
3779046M2 110 5
3779048M91 80–45
3779119M1 115–25
3779120M1 115 25
3779121M1 115 25
3779123M1 115 25
3779124M2 115 25
3779125M1 115 25
3779126M2 120 35
3779127M1 120–35
3779128M1 90–120
3779132M92 30 25
3779133M92 30 25
3779141M93 90 45
3779149M1 100 75
3779150M1 100 75
3779157M1 100 75
3779158M1 100–75
3779170M1 10–15
3779176M1 100 70
3779180M1 100 70
3779185M1 100 70
3779189M1 100 70
3779192M93 110 5
3779194M93 90 10
3779204M1 25–185
25–190
25 195
25 200
25 205
25 210

3779205M1	25 185	3779220M1	25 185	3779240M1	25 185	3779266M91	25 190	3779407M1	100 95	3779611M91	110 250
	25 190		25 190		25 190	3779267M91	25 195	3779435M1	20 85	3779612M1	110 255
	25 195		25 195		25 195	3779268M91	25 200	3779446M1	70 225		110 265
	25 200		25 200		25 200	3779269M91	25 205		70 230	3779631M1	10 10
	25 205		25 205		25 205	3779270M91	25 210	3779448M2	70 35	3779632M1	10 10
	25 210		25 210		25 210	3779271M1	25 185		70 40	3779634M1	110 295
3779206M1	25–160	3779222M1	25–160	3779242M1	25–160	3779272M91	25–175		70–225	3779636M1	110–295
3779207M1	25–160		25–165	3779243M1	25–185	3779273M1	25–175		70–230	3779638M1	110–295
3779208M1	25 160	3779224M1	25 160		25 190	3779274M1	25 205		70 240	3779641M92	110 295
3779209M1	25 185	3779225M1	25 165		25 195	3779276M1	25 180		70 245	3779643M2	10 5
	25 190	3779227M1	25 175		25 200	3779278M1	25 165	3779450M1	10 230		10 10
	25 195	3779228M1	25 175		25 205	3779279M1	25 160	3779452M1	10 230		10 15
	25 200	3779229M1	25 185		25 210	3779280M1	25 160		10 240	3779651M1	25 125
	25 205		25 190	3779244M91	25 165		25 165	3779453M91	10 290	3779652M1	25 125
	25–210		25–195		25–170	3779281M91	25–160		10–295	3779667M1	100–135
3779210M1	25–185		25–200	3779245M1	25–185	3779283M91	25–160	3779460M93	90–45	3779668M1	100–135
	25 190		25 205		25 195	3779284M91	25 160	3779469M1	70 415	3779669M1	100 135
	25 195		25 210	3779246M1	25 185		25 165		70 425	3779670M1	100 135
	25 200	3779230M1	25 200	3779247M1	25 185	3779302M2	100 15		70 440	3779671M1	100 135
	25 205		25 205	3779248M1	25 190		100 20		70 445	3779672M1	100 135
	25 210		25 210	3779249M1	25 195	3779303M1	25 170		70 455	3779675M1	100 135
3779211M1	25 185	3779231M1	25 185	3779250M1	25 195	3779304M1	25 170	3779478M1	90 45	3779676M1	100 135
	25–190		25–190	3779251M1	25–190	3779305M1	25–170	3779479M1	70–415	3779678M1	100–135
	25–195		25–195	3779252M1	25–200	3779306M1	25–170		70–425	3779683M4	80–140
3779212M1	25 180		25 200	3779253M1	25 205	3779307M1	25 170		70 440	3779699M1	80 30
	25 190		25 205	3779254M1	25 205	3779308M1	25 160		70 445	3779720M1	80 30
3779213M1	25 205		25 210	3779255M1	25 210		25 170		70 455	3779739M1	110 125
3779214M1	25 185	3779232M1	25 185	3779256M1	25 210	3779309M1	25 170	3779500M4	90 125		110 130
	25 190		25 190	3779257M1	25 190	3779310M1	25 170	3779516M1	120 55	3779744M97	80 55
	25 195		25 195	3779258M1	25 200	3779311M1	25 170	3779517M1	120 55	3779753M94	80 50
	25–200		25–200	3779259M1	25–190	3779312M1	25–170	3779518M1	115–20	3779755M93	80–50
	25–205		25–205		25–195	3779313M1	25–170	3779519M1	115–20	3779757M93	80–50
	25 210		25 210		25 200	3779314M1	25 170	3779530M1	120 55	3779762M1	80 115
3779215M1	25 160	3779233M1	25 185		25 205	3779315M1	25 170	3779547M1	25 130	3779767M1	100 30
3779216M1	25 185		25 190	3779260M1	25 185	3779316M1	25 170		25 140		100 35
	25 190		25 195		25 210	3779317M1	25 170		25 150		100 40
	25 195		25 200	3779261M1	25 190	3779375M1	10 20		90 105	3779768M1	100 30
	25 200	3779234M1	25 160	3779262M1	25 180		10 25	3779560M2	80 35		100 35
	25–205		25–165		25–185	3779377M1	80–60	3779561M2	80–35		100–40
	25–210	3779235M1	25–165		25–190		80–70	3779565M2	130–30	3779784M1	110–230
3779217M1	25 175	3779237M1	25 165		25 195		90 145	3779567M1	130 30	3779785M2	110 230
3779218M1	25 160	3779238M91	25 185		25 200	3779384M1	10 180		130 35	3779807M1	110 230
3779219M1	25 185	3779239M1	25 200	3779263M1	25 185	3779389M1	25 120	3779572M1	90 45	3779849M4	90 105
	25 190		25 205		25 195		110 100		90 95	3779879M1	80 30
	25 195		25 210	3779264M1	25 200	3779396M1	10 230		90 100		80 35
	25 200				25 205		10 240		90 110	3779892M91	110 120
	25–205				25–210	3779399M1	100–25	3779599M1	80–135	3779893M91	110–120
	25–210			3779265M1	25–160	3779400M2	10–195	3779607M2	10–185	3779905M1	110–120

3779906M1	110 120	3780301M1	100 25	3780540M91	110 50	3780683M1	70 155	3781063M1	10 185	3781240M1	70 35
3779976M1	10 200	3780302M1	130 55	3780544M1	110 50	3780692M92	110 5	3781076M2	10 270		70 40
3780003M1	80 60		130 60	3780550M1	70 225	3780693M2	100 15		10 275	3781242M92	25 115
	80 70		130 65		70 230		100 20	3781078M3	80 35	3781247M11	150 70
3780025M1	10 255	3780303M1	100 5		70 235	3780694M2	100 15	3781079M3	80 35	3781249M11	150 75
	10 260	3780314M91	110 185		70 240		100 20	3781088M1	70 35	3781252M2	100 5
	10–265	3780317M1	115–5		70–245	3780699M4	100–10		70–40	3781262M1	10–230
3780040M91	110–5	3780318M1	115–5	3780552M1	120–40	3780714M91	110–45	3781089M1	70–35		10–240
3780048M92	110 5	3780365M1	25 115		120 45	3780718M1	100 80		70 40	3781283M1	10 175
3780049M91	110 5	3780370M1	10 70		120 50	3780727M1	10 255	3781090M1	110 295	3781290M2	80 35
3780077M2	25 130	3780372M2	80 105		120 55		10 260	3781101M2	10 270	3781297M1	10 255
	25 140	3780373M1	80 105	3780553M1	120 60	3780728M1	10 255		10 275		10 260
	25 150	3780374M1	10 70	3780557M1	10 195		10 260		10 280	3781298M91	110 5
3780090M2	90 5	3780375M1	25 115	3780558M3	10 225	3780742M1	100 115		10 285	3781304M2	10 195
3780098M1	10–295	3780387M1	100–5		10–230	3780743M1	100–125	3781102M2	10–270	3781307M2	60–65
3780127M1	80–130	3780388M1	100–5		10–235	3780744M1	100–120		10–275	3781309M1	90–65
	80 135	3780390M1	10 10		10 240	3780745M1	100 130		10 280	3781310M1	90 65
3780154M96	80 65	3780395M2	20 85	3780560M2	10 25	3780746M1	100 105		10 285		90 70
3780156M96	80 65		30 25	3780574M1	10 255	3780747M1	100 110	3781110M2	10 170	3781312M1	110 195
3780159M96	80 65		70 175		10 260	3780859M2	100 5		10 175	3781314M91	10 225
3780161M96	80 70		70 180	3780579M92	80 20	3780860M2	100 5		10 180		10 235
3780175M1	50 55		80 105	3780580M1	20 85	3780862M1	10 270	3781117M2	110 105		10 245
3780180M1	70–205		80–110		20–90		10–275	3781118M2	110–105	3781315M1	90–70
	70–215		80–115		20–95	3780888M1	110–70	3781143M1	10–175	3781316M1	10–185
	70 220		80 120	3780581M1	25 105	3780926M1	25 115		10 180	3781317M1	10 230
3780189M91	10 250	3780399M1	110 90		25 110	3780928M1	110 215	3781153M1	25 120		10 240
3780201M1	10 5	3780410M1	110 250		50 50	3780931M1	10 245	3781166M3	100 15	3781318M91	20 10
	10 10	3780415M1	80 65		50 55	3780939M1	20 90	3781174M1	70 160	3781332M1	10 235
	10 15	3780440M91	20 5		50 60		20 95	3781189M1	100 30		10 240
3780204M1	10 10	3780442M1	20 15	3780592M2	10 185	3780941M3	20 95		100 35	3781363M1	80 35
	10–15	3780445M95	80–60	3780596M94	70–25	3780942M3	20–90	3781194M3	100–15	3781374M93	100–30
3780206M1	10–5	3780456M2	80–110	3780626M1	110–80		20–95	3781195M3	100–10		100–35
3780220M2	10 195	3780457M1	80 110		110 85	3780978M2	20 90	3781198M3	10 170	3781375M93	10 250
3780221M2	10 195	3780466M1	80 30	3780629M91	110 250		20 95		10 175	3781377M1	10 250
3780222M2	10 195	3780467M1	130 35	3780634M1	10 25	3780988M3	100 10		10 180	3781384M1	20 85
3780230M1	10 195	3780468M2	130 35		10 35	3780990M2	100 10	3781199M2	10 235	3781401M1	100 80
3780243M2	10 255	3780472M1	110 50	3780646M91	110 250	3780998M92	100 10		10 240		100 130
	10 260	3780473M1	110 50	3780653M91	110 5	3781002M1	25 120	3781203M1	10 195	3781422M1	100 65
3780252M2	10–255	3780474M1	110–50	3780654M1	25–115	3781003M1	80–50	3781204M2	10–195	3781423M1	100–65
	10–260	3780481M1	80–120	3780662M1	60–40		80–55	3781226M5	100–25	3781427M1	100–65
3780253M2	10 255	3780483M1	10 270	3780665M1	110 80		80 65	3781230M1	100 135	3781428M1	100 65
	10 260		10 275	3780666M1	110 80	3781005M91	10 5	3781233M1	100 10	3781444M92	120 15
3780275M2	70 155	3780487M1	10 70	3780667M1	110 80	3781006M1	10 5		110 105	3781445M92	120 15
	70 160	3780508M3	10 195	3780675M1	110 65		10 10	3781237M5	100 25	3781446M2	110 110
	70 165	3780523M91	110 50		120 40		10 15	3781238M1	70 35	3781447M2	110 110
3780279M1	110 55	3780529M91	110 50	3780676M1	110 65	3781031M11	150 30		70 40	3781448M2	110 110
3780289M1	30–25	3780532M91	110–50		120–40	3781036M11	150–30	3781239M2	70–35	3781449M2	110–110
3780299M1	10–245	3780538M91	110–50	3780682M1	70–155	3781060M1	25–120		70–40	3781488M1	10–295

3781557M1	100 25	3781929M1	130 55	3782028M1	10 5	3782172M1	90 10	3782425M1	70 35	3782541M3	80 85
3781559M1	25 120	3781930M1	130 55		10 10		90 15		70 40	3782545M3	100 25
3781561M3	25 120	3781935M1	25 120	3782043M1	10 205		90 20		70 235	3782555M3	25 120
3781566M1	25 120	3781936M1	70 155		10 215		90 25	3782428M2	10 170	3782556M1	25 120
3781572M1	50 110		70 160	3782045M1	10 195	3782181M6	10 255	3782429M1	10 175	3782559M1	10 20
	50 115	3781937M1	10 185	3782047M1	10 70		10 260	3782432M3	10 255	3782569M1	50 30
	70–155	3781953M1	70–160	3782048M1	10–70	3782186M1	80–50	3782433M3	10–255	3782598M1	25–115
	70–215	3781968M1	130–50	3782050M1	10–70		80–55	3782435M2	10–170	3782599M2	110–105
3781577M91	25 120	3781969M2	130 50	3782072M1	100 15		80 60		10 180	3782603M1	70 155
3781577M92	25 120	3781970M1	130 50		100 20	3782208M1	10 230	3782436M2	10 170	3782604M1	70 155
3781578M1	25 120	3781971M1	130 50	3782073M1	100 15		10 240		10 175	3782607M1	10 25
3781582M1	25 120	3781972M1	130 50		100 20	3782217M1	25 115		10 180	3782611M1	10 185
3781583M94	25 120	3781976M1	100 10	3782075M3	100 15	3782218M1	25 115	3782448M2	10 170	3782613M2	10 185
3781585M1	25 120	3781977M91	10 230		100 20	3782220M1	25 115		10 175		10 190
3781586M1	25–120		10–240	3782076M3	100–15	3782221M1	25–115		10–180	3782614M3	90–75
3781587M1	25–120		10–245		100–20	3782222M1	25–115	3782456M1	60–5		90–80
3781620M2	10 195	3781979M2	25 120	3782092M1	110 110	3782223M1	25 115		60 10		110 5
3781649M2	50 30	3781979M3	25 120	3782101M2	10 70	3782335M91	10 205	3782461M92	60 5	3782615M91	90 15
3781657M1	20 85	3781981M1	130 50	3782106M2	10 185		10 215		60 10	3782620M91	90 110
3781674M11	150 35	3781982M1	130 50	3782107M1	10 185	3782337M2	70 205	3782462M4	60 5	3782629M2	100 25
3781676M11	150 30	3781983M91	60 60	3782108M1	25 130		70 215	3782478M91	150 55	3782630M2	100 15
3781677M11	150 30	3781999M2	100 15		25 140		70 225	3782479M1	150 55		100 20
3781678M11	150–35		100–20	3782112M2	10–195		70–240	3782480M91	150–55	3782641M1	130–45
3781679M11	150–35	3782000M2	100–5	3782113M1	10–195		70–245	3782481M1	150–55	3782645M1	30–25
3781689M1	70 175	3782001M2	100 5	3782117M1	70 175	3782340M1	10 205	3782482M1	150 55	3782646M1	30 25
3781792M1	50 30	3782002M1	100 5	3782118M1	70 175		10 215	3782484M1	150 55	3782647M1	30 25
3781881M1	110 105	3782003M1	100 5	3782120M2	20 90	3782342M2	110 185	3782486M1	110 5	3782648M1	30 25
3781882M1	110 105	3782004M1	100 15		20 95	3782343M1	10 205	3782487M1	110 5	3782649M1	30 25
3781883M4	110 110		100 20	3782122M1	100 5		10 215	3782489M1	100 80	3782666M1	110 80
3781884M4	110 110	3782005M1	25 120	3782135M1	10 185	3782344M1	10 255		100 85	3782675M1	40 195
3781885M4	110–110	3782008M5	10–5	3782138M2	10–170		10–260		100–95	3782678M1	40–195
3781886M4	110–110		10–15		10–175	3782355M2	10–200		100–100	3782679M1	40–195
3781889M1	110 105	3782009M4	10 5		10 180	3782356M1	10 270		100 105	3782680M1	40 195
3781890M1	110 105		10 10	3782139M2	10 170		10 275		100 110	3782681M1	40 200
3781891M2	110 110		10 15		10 175	3782364M4	100 60		100 115	3782682M1	40 195
3781892M2	110 110	3782014M93	25 140		10 180	3782384M1	10 215		100 120	3782684M1	40 195
3781912M1	70 160	3782015M92	25 130	3782142M93	10 210	3782394M1	10 215		100 125	3782685M1	40 195
3781913M1	70 160	3782018M92	25 150	3782154M1	130 55	3782421M1	10 205		100 130	3782686M1	40 195
3781914M1	70–160	3782019M2	25–130	3782155M1	130–65		10–210		100–135	3782688M1	40–195
3781915M1	70–160		25–140	3782156M1	130–60		10–215	3782493M1	100–5	3782689M1	40–195
3781918M2	70 155	378201X1	50 95	3782157M1	130 60		10 220	3782494M1	100 55	3782690M1	40 195
	70 160	3782020M2	25 130	3782160M3	10 255		10 240	3782495M1	100 55	3782691M1	40 195
3781919M1	70 160		25 140		10 260	3782423M1	70 35	378251X1	70 50	3782693M1	25 120
3781920M1	70 160	3782022M3	25 130	3782161M1	10 255		70 40	3782522M1	40 195	3782696M1	110 90
3781921M2	70 155		25 140		10 260	3782424M1	70 35	3782533M1	10 270		115 10
	70 160	3782023M1	25 130	3782162M1	10 180		70 40		10 275	3782697M1	110 90
3781924M1	50–30		25–140					3782534M91	110–100		115–10
3781926M1	130–65	3782025M1	25–120					3782538M1	25–120	3782704M2	10–270

3782711M2	10 185	3782952M1	25 140	3783063M92	100 45	3783211M1	10 255	3783396M1	100 80	3783512M1	70 35
3782712M2	10 185		25 150	3783070M1	100 60	3783217M91	90 20		100 105		70 40
3782714M1	10 185	3782969M1	110 30	3783076M91	100 50		90 25		100 110	3783514M1	70 35
3782715M1	10 185	3782972M1	100 5	3783084M91	100 55	3783218M91	90 20		100 115		70 40
3782716M1	10 185	3782973M1	10 300	3783086M1	50 120		90 25		100 120	3783516M1	70 35
3782717M1	10 185	3782975M1	100 25	3783088M1	10 260	3783229M1	70 430		100 125		70 40
3782722M2	100–15	3782986M1	80–50	3783102M1	80–150		70–435		100–130	3783517M1	70–35
	100–20		80–55	3783103M1	80–155		70–450	3783397M1	10–225		70–40
3782726M3	100 15		80 60	3783108M1	25 115		70 460		10 235	3783523M1	70 35
	100 20	3782987M1	10 280	3783109M1	25 115	3783230M1	70 420	3783400M1	70 420		70 40
3782727M3	100 15		10 285	3783129M1	110 45		70 430		70 430	3783524M1	70 35
	100 20	3782988M1	10 280	3783135M1	25 120		70 435		70 435		70 40
3782728M1	100 25		10 285	3783137M1	25 120		70 450		70 450	3783525M1	70 35
3782729M1	100 25	3782989M1	40 200	3783142M1	70 430		70 460		70 460		70 40
3782730M1	100–25	3782990M1	40–200		70–440	3783232M1	110–5	3783401M1	70–420	3783526M1	70–35
3782731M1	100–25	3782997M1	40–205		70–455	3783253M1	10–165		70–430		70–40
3782732M1	100 25		40 210		70 460	3783267M93	40 180		70 435	3783528M1	70 35
3782733M1	100 25	3782998M1	40 205	3783143M1	70 430	3783272M1	10 195		70 450		70 40
3782763M1	100 15		40 210		70 440	3783315M1	25 140		70 460	3783529M1	70 35
	100 20		150 25		70 455		25 150	3783402M1	70 430		70 40
3782772M1	100 5	3782999M1	40 205		70 460	3783350M1	10 5		70 435	3783537M1	110 165
3782773M1	100 5		40 210	3783144M1	70 430		10 10		70 450		110 170
3782844M2	60–30	3783007M2	40–200		70–440		10–15		70–460	3783538M91	110–5
3782868M1	130–45	3783008M1	40–210		70–455	3783352M1	10–10	3783403M1	70–450	3783567M1	10–255
3782869M1	70 155	3783009M2	40 205		70 460		10 15		70 460		10 260
378287X1	25 20	3783010M2	40 205	3783145M1	70 430	3783361M2	10 255	3783408M2	100 30	3783591M1	80 25
3782881M1	110 45		40 210		70 440	3783367M1	40 200		100 35	3783599M1	10 210
3782882M2	10 270	3783011M1	40 195		70 455		60 10	3783413M1	20 95	3783659M1	20 90
	10 275		150 25		70 460	3783368M1	40 200	3783415M1	100 65		20 95
3782884M93	100 45	3783012M1	110 105	3783146M1	70 455		60 10	3783416M1	120 35	3783660M1	25 130
	100–50	3783013M1	10–280		70–460	3783372M1	120–30	3783417M1	120–35		25–140
3782889M1	100–45		10–285	3783148M92	90–20	3783373M1	120–30	3783425M1	90–155		25–150
	100 50	3783014M1	80 65		90 25	3783380M1	120 40	3783431M1	50 110	3783662M1	90 155
3782892M1	10 185		80 70	3783149M1	100 25	3783393M1	100 100		50 115	3783665M1	10 205
	110 90	3783015M1	25 150	3783151M1	70 420	3783394M1	100 80	3783432M1	50 110	3783675M1	50 120
	115 10	3783017M1	10 260		70 430		100 105		50 115	3783700M1	10 20
3782893M2	10 185	3783018M1	10 260		70 435		100 110	3783453M1	90 90	3783702M1	10 25
3782896M1	10 270	3783019M1	10 260		70 450		100 115	3783455M1	110 125	3783772M1	25 130
	10–275	3783036M92	40–195		70–460		100–120	3783463M1	25–120		25–140
3782897M1	120–5		40–200	3783153M1	90–155		100–125	3783464M1	25–120	3783825M11	150–5
378289X1	25 20		40 210	3783154M2	90 155		100 130	3783465M2	80 140	3783826M11	150 10
3782903M1	110 165		150 20	3783196M1	100 70	3783395M1	100 100		80 145	3783832M1	20 90
	110 170	3783038M93	40 195	3783197M1	100 70			3783467M1	20 85		20 95
3782904M1	110 165		40 200	3783199M1	100 15			3783469M91	80 5	3783836M1	20 90
	110 170		40 205		100 20			3783470M91	80 10		20 95
378290X1	25 20		150 15	3783204M1	25 125			3783496M11	150 40	3783837M1	40 205
3782951M2	25–140	3783043M1	100–20	3783205M1	90–20			3783497M11	150–40	3783838M1	10–285
	25–150	3783045M1	100–20	3783210M1	10–255					3783839M1	40–195

3783840M1	40 195
3783841M1	60 65
3783842M1	60 65
3783857M1	80 55
	80 65
3783859M1	80 35
3783921M91	10–210
3783927M11	150–85
3783928M11	150 85
3783929M11	150 85
3783956M1	10 200
3783962M1	90 25
3783970M91	90 25
3783973M1	100 130
3783975M1	90–25
3784009M1	50–110
	50 115
3784010M1	50 110
	50 115
3784011M1	50 110
3784012M1	50 115
3784013M1	50 110
	50–115
3784014M1	50–110
	50 115
3784015M1	10 250
3784034M1	10 10
	10 15
3784036M1	40 210
3784044M91	50 120
3784049M1	10–275
3784052M1	10–275
3784054M1	10 275
3784085M1	10 225
	10 235
3784086M1	10 230
	10 240
3784095M1	25 130
	25–140
3784133M1	130–75
3784145M91	100 140
3784146M91	100 140
3784147M91	100 140
3784148M91	100 140
3784149M91	100 140
3784150M91	100 140
3784151M91	100–140
3784152M91	100–140
3784153M91	100 140
3784154M91	100 140
3784174M1	130 45
3784175M1	130 45
3784206M1	10 275
3784395M1	10 10
3784396M1	10–10
3784398M1	10–10
3784447M1	10 10
3784448M1	10 10
3784564M1	100 45
	100 50
3784565M1	100 45
	100 50
3784566M1	110–165
3784573M1	10–10
3784593M1	110 30
	110 45
3784594M1	110 55
3784595M11	150 60
3784596M1	110 115
	110 125
	110–130
3784680M1	10–200
3784700M1	110 35
3784899M1	60 60
3784906M1	10 305
	10 310
3784943M91	130 35
3784944M91	130 35
3784947M1	130–35
3784948M1	130–35
3784976M2	130 35
3785027M1	130 35
3785049M1	130 35
3785050M1	130 35
3785051M1	130 35
3785052M1	130 35
3785053M1	130–35
3785087M1	80–35
3785088M1	80 35
3785266M1	130 35
3785267M1	130 35
3785271M1	130 35
3790001M91	70 45
3790002M1	70 45
3790004M1	40–150
3790005M1	40–150
3790025M1	70 55
	70 120
3790027M11	70 55
	70 60
	70 115
	70 120
3790036M1	70–55
	70–120
3790048M12	30 40
3790049M11	30 40
3790074M91	70 80
	70 85
	70 90
	70 95
3790094M1	40–105
	40–110
	40 120
3790121M1	70 50
	70 115
	70 120
3790170M1	25 65
	25 70
	25–75
	25–80
3790193M1	70 50
3790241M1	20 30
3790266M2	20 30
3790270M1	20 30
3790271M1	20 30
3790323M1	20 30
3790324M1	20–30
3790325M1	20–30
3790349M91	40 105
	40 110
	40 115
	40 120
	40 170
3790353M1	25 20
	25–25
3790354M1	25–20
3790409M1	20 50
	20 60
	20 65
	20 105
3790442M1	20 50
	20 60
	20–65
3790457M1	40 110
	40 115
	40 120
	40 140
	40 145
3790470M1	40 105
	40–110
	40–115
	40 120
3790474M2	40 105
	40 110
	40 120
3790494M1	30 15
3790533M1	20 35
3790546M1	25–50
3790735M2	20–5
3790749M1	40 105
	40 110
	40 115
	40 120
	40 125
	40 130
	40–135
	40–140
	40 145
3790750M4	40 105
	40 110
	40 115
	40 120
3790751M91	40 105
	40–110
	40–115
	40 120
3790773M11	70 280
	70 290
	70 300
	70 310
	70 320
	70–330
	70–340
	70 350
	70 360
	70 370
3790797M11	70 280
	70 290
	70 300
	70 310
	70 320
	70 330
	70–340
	70–350
	70 360
	70 370
3790808M3	25 60
3790842M1	90 90
3790853M1	90 90
3790863M1	70 115
	70–120
3790868M1	50–15
3790871M2	70 145
	70 150
3790881M1	90 40
3790883M1	70 160
	70 170
3790885M1	25 60
3790887M1	70–140
3790892M91	70–145
3790894M91	70 145
3790896M91	70 145
3790898M91	70 145
	70 150
3790900M1	70 115
	70 120
3790908M5	90–145
3790910M2	90–90
3790912M1	90 90
3790918M91	70 145
	70 150
3790920M91	70 145
3790922M91	70 145
3790924M91	70 145
	70–150
3790928M93	70–145
	70 150
3790931M1	30 30
3790933M1	40 130
	40 135
	40 140
	40 145
3790936M91	40 130
	40 135
	40 140
	40 145
3790937M1	40 130
	40 135
	40–140
	40–145
3790940M1	40 130
	40 135
	40 140
	40 145
3790951M1	30 20
3791098M1	90 90
3791105M2	90–150
3791106M1	30–20
3791107M1	30 20
3791109M1	70 55
	70 60
	70 115
	70 120
3791110M2	70 140
3791124M2	30–20
3791125M4	30–20
3791141M91	30 20
3791158M1	25 90
3791165M1	25 15
	25 25
3791175M92	70 155
	70 215
3791186M1	25–215
3791191M1	25–215
3791193M1	40 35
	40 40
	40 45
3791194M91	70 250
3791196M91	70 250
3791198M91	70 250
3791200M91	70–250
3791202M91	70–80
	70 85
	70 90
	70 95
3791208M2	30 35
3791227M2	30 55
3791274M91	70 145
	70–150
3791286M1	30–20

3791288M1	70 410
3791328M4	70 45
3791352M1	70 390
	70 395
	70 400
3791375M91	70 70
3791376M91	70–70
3791380M1	30–20
3791382M91	70 160
3791393M91	70 140
3791398M91	20 20
	20 25
3791400M1	60 50
3791409M4	20 20
3791412M1	20–80
	70–65
	70 75
3791415M1	30 50
3791418M1	70 270
	70 275
3791419M91	70 70
3791431M1	30 15
3791438M1	30–35
3791466M2	70–410
3791467M1	40 140
	40 145
3791468M91	20 50
	20 60
3791469M1	40 110
	40 115
	40–140
	40–145
3791470M1	40 110
	40 115
	40 120
	40 140
	40 145
3791474M1	40 110
	40–115
3791475M91	40–60
3791483M1	40 75
3791484M1	40 75
	40 80
	40 85
3791486M91	70 250
3791488M2	30 15
3791502M1	40 75
	40 80
	40 85
3791530M1	70 45
3791535M92	40 25
3791536M92	40 20
3791537M1	40–20
3791538M1	40–25
3791539M1	40 20
3791540M1	40 20
	40 25
3791541M1	40 20
	40 25
3791542M91	40 65
3791545M1	40–120
3791558M1	20–20
	20 25
3791559M1	20 20
	20 25
3791563M1	20 20
3791565M2	25 85
3791570M1	30 20
3791571M2	30–20
3791602M1	40–160
3791611M1	70 80
	70 85
3791616M1	30 55
3791617M1	30 55
3791618M1	30 55
3791630M1	40 35
	40–45
3791631M1	40–35
	40 45
3791633M1	25 85
	25 90
3791642M1	40 155
3791643M1	40 125
	40 130
	40–135
	40–140
	40 145
3791650M1	25 50
3791655M1	70 380
	70 385
3791669M1	30 15
3791677M92	40 65
3791686M1	30–50
3791687M1	30–50
3791689M1	30 50
3791696M1	40 5
3791697M91	70 265
3791700M5	90 80
3791706M1	30 30
3791709M1	70 130
	70–380
	70–385
3791710M1	70 130
3791711M1	70 130
3791712M1	70 105
3791713M1	70 105
3791714M1	70 105
3791715M1	70 105
3791716M1	70–150
3791717M1	70–105
3791720M93	60 50
3791782M1	30 70
3791783M1	30 70
3791784M1	30 65
3791821M1	25 85
	25 95
3791822M1	25–100
3791823M1	40–110
	40 115
	40 120
	40 140
	40 145
3791831M91	40 105
3791833M2	40 105
3791835M1	40–80
3791839M1	25–90
3791844M1	70 110
3791845M91	70 260
3791847M91	70 260
	70 265
3791858M1	40 120
3791859M1	50 45
3791860M1	50–50
	50–55
3791867M11	40 35
	40 45
3791868M11	40 35
	40 45
3791873M2	70 140
3791874M2	70 140
3791879M1	70–380
	70–385
3791880M1	70 380
	70 385
3791884M2	70 270
	70 380
	70 385
3791889M1	70 110
3791900M1	70–45
3791912M1	70–115
	70 120
3791925M1	50 15
3791926M1	50 15
3791927M1	25 40
3791928M1	50 15
3791929M1	50 15
3791932M1	25–40
3791939M1	25–40
3791940M1	25 40
3791941M1	25 40
3791942M1	25 40
3791953M91	70 145
	70 150
3791963M11	50 15
3791966M91	25–40
3792015M91	40–15
3792019M1	70 150
3792033M1	70 105
3792040M91	70 115
	70 120
3792041M1	70 125
3792042M1	70 130
	70–285
	70–295
	70 305
	70 315
	70 325
	70 335
	70 345
	70 355
	70–365
	70–375
3792054M1	90 40
3792081M1	40 170
3792083M1	40 170
3792091M1	40 170
3792094M1	90 75
	90 85
3792105M3	30–30
3792107M1	70 260
	70 265
3792164M1	70 295
	70 305
	70 315
	70 325
	70–335
	70–345
	70 355
	70 365
3792167M1	70 325
	70 365
3792183M1	40 30
3792196M1	25–75
	25–80
	30 20
3792255M1	40 30
3792268M1	20 5
3792280M1	70 410
3792285M91	20 70
3792287M1	20 70
3792313M1	70–130
3792314M1	30–5
	30 10
3792315M1	30 5
	30 10
3792320M1	25 85
	25 90
3792321M1	25 85
	25–90
3792322M1	25–85
	25 90
3792324M1	60 55
3792328M2	30 50
	30 55
3792329M2	30 50
	30 55
3792330M2	30–50
	30–55
3792331M2	30 50
	30 55
3792344M1	20 10
3792345M2	20 10
3792346M1	20 10
3792347M1	70 50
3792361M1	25–85
	25–90
3792364M1	20 60
3792365M1	70 50
3792376M1	25 35
3792379M1	25 50
3792383M1	25 50
3792397M93	40 130
	40–140
3792398M92	40–135
	40 145
3792408M91	40 70
3792432M1	40 130
	40 135
	40 140
	40 145
3792433M1	40–75
	40–80
	40 85
3792437M92	90 50
3792454M1	30 60
3792455M1	30 60
3792456M1	30 60
3792463M1	20 20
	20–25
3792468M2	20–80
3792470M1	25 40
3792488M2	130 70
3792496M1	25 75
	25 80
3792504M1	90 145
3792538M1	40 45
3792539M1	40–45
3792559M1	70–390
	70 395
	70 400
	70 405
3792561M1	70 390
	70 395
	70 400
	70–405
3792562M1	70–395
	70 400
	70 405
3792563M1	70 400
	70 405
3792574M1	40 75

3792577M1	40 130
	40 135
	40 140
	40 145
3792589M1	40 35
3792590M1	40 35
3792591M1	40–35
3792592M1	40–35
3792593M1	40 35
3792594M1	40 35
3792595M1	40 35
3792618M1	70 55
	70 60
	70 115
	70–120
3792619M2	130–70
3792628M91	40 15
3792629M91	40 15
3792637M91	40 15
3792639M1	70 320
	70 360
	70 370
3792640M1	70–280
	70–290
	70 300
	70 310
	70 320
	70 330
	70 340
	70 350
	70–360
	70–370
3792645M1	40 170
3792646M91	40 170
3792647M1	40 170
3792648M91	40 170
3792649M1	40 170
3792650M1	40 170
3792651M1	40–170
3792652M91	40–170
3792653M91	40 170
3792654M91	40 170
3792658M91	40 170
3792660M1	40 170
3792662M91	40 170
3792663M91	40 170
3792664M1	40–170
3792665M91	40–170
3792666M1	40 170
3792667M91	40 170
3792667M92	40 170
3792679M91	50 65
	50 70
3792720M91	70 400
3792727M1	40–170
3792734M1	70–390
	70 395
	70 400
3792736M1	70 80
	70 85
	70 125
3792739M1	70 390
	70–395
	70–400
3792741M1	70 390
	70 395
	70 400
3792745M1	70 390
	70 395
	70 400
3792747M1	70–400
3792750M1	70–390
	70 395
	70 400
3792751M2	70 395
	70 400
3792769M91	70 390
	70 395
	70–400
3792776M1	40–175
3792777M2	40 175
3792781M91	30 55
3792786M1	40 170
3792787M1	40 175
3792791M1	30 55
3792800M11	30 70
3792802M1	70–280
	70–290
	70 320
	70 330
	70 360
3792803M3	70 280
	70 290
	70 320
	70–330
	70–360
3792834M91	40 170
3792837M1	50 65
	50 70
3792838M1	50 65
	50 70
3792872M1	40 175
3792875M92	40–175
3792922M1	30–35
3792923M1	30 35
	30 40
	30 45
3792924M1	30 35
	30 40
	30 45
3792926M1	20–50
	20–60
	20 65
3792932M91	40 75
	40 80
	40 85
	40 90
3792934M91	40 75
	40–80
	40–85
	40 90
3792936M1	20 105
3793048M1	130 70
3793049M1	130 70
3793082M1	30 35
3793083M1	30 35
3793128M1	20–20
	20–25
3793135M91	50 65
	50 70
3793160M11	40 130
	40 135
	40 140
	40 145
3793161M11	40–125
3793226M91	40–35
3793227M91	40 35
3793246M1	50 65
	50 70
3793263M1	20 105
3793264M1	20 55
3793346M1	70 50
	70–115
	70–120
3793410M2	70 390
3793419M2	40 115
3793421M1	40 135
	40 145
3793445M1	70 100
3793447M91	20 20
3793452M1	70–145
3793500M1	25–50
3793504M1	30 20
3793505M91	30 20
3793517M1	70 145
3793518M91	70 145
3793559M1	25 65
	25 70
3793575M1	70–65
	70–75
3793579M1	25 50
3793580M1	25 50
3793583M91	25 40
3793584M1	50 5
3793586M11	25 20
3793588M11	25 25
3793589M1	25–25
3793590M1	25–25
3793592M11	25 20
3793593M1	25 20
3793595M1	25 25
3793597M1	25 25
3793599M11	25 20
3793601M1	25 25
3793602M1	25–25
3793603M1	25–25
3793604M1	25 25
3793606M1	20 30
3793608M11	20 30
3793609M1	20 30
3793610M1	20 30
3793611M11	20 30
3793612M1	20–30
3793613M1	20–25
3793617M1	20 25
3793619M1	20 25
3793622M1	20 30
3793624M1	20 30
3793627M11	20 30
3793628M1	20 40
3793629M1	20–25
3793630M1	20–30
3793631M1	20 25
3793632M1	20 30
3793633M1	20 40
3793635M91	20 55
3793636M1	20 30
3793639M1	20 80
3793641M1	20–65
3793643M1	20–65
3793644M1	20 55
3793645M1	20 65
3793646M1	20 55
3793647M11	20 65
	20 80
3793648M1	20 5
3793673M91	20–75
	20–80
3793686M91	20 55
	20 65
3793687M91	20 55
3793689M1	20 35
3793689M2	20 55
3793690M11	20 50
	20–60
	20–75
3793694M1	25 65
3793699M91	25 50
	25 55
3793700M91	25 50
	25 55
3793708M91	25 65
3793732M1	20–70
3793734M1	20–55
3793735M1	20 65
3793736M1	20 65
3793737M1	20 65
3793738M1	20 55
3793739M1	20 55
3793740M1	20 55
3793768M1	50–25
3793772M91	70–70
	70 105
3793785M1	90 100
3793999M1	40 170
3794000M1	40 170
3794041M1	30 35
	30 40
3794042M1	30–35
	30–40
3794178M91	40 170
3794196M1	20 105
3794220M1	25 85
	25 90
3794221M91	40 85
3794227M1	40 85
3794230M91	40–85
3794232M1	40–85
3794374M1	30 30
3794411M91	40 150
3794472M91	40 150
3794474M91	40 150
3794522M1	25 20
3794614M1	40 85
3794662M1	40–85
3794663M1	40–85
3794694M1	30 35
	30 40
	30 45
	130 75
3795042M1	30 35
	30 40
	30–45
380003X1	70–105
	70 145
	70 150
380005X1	30 35
380006X1	20 35
	20 55
380009X1	20 50
	20–60
	20–65
380018X1	20 50
	20 60
	20 65
	20 105
380021X1	20 45
380023X91	20 45
380026X1	110–125
	110–165

380031X91	70 285	3808564M1	100 90	385361X1	10 5	385362X1	10 215	3900285M1	120 65	3900986M1	25 35
	70 295		100 95		10 10		40 35	3900295M91	110 285		25 55
	70 305	3808567M2	100 85		10 15		40 40	3900383M1	90 50		25 60
	70 315		100 95		10 20		40 45		110 230	3900993M91	20 75
	70 325	3808664M1	100 15		20 35		40 105	3900512M92	70 320		20 80
	70 335		100 20		20 40		40 110		70 360	3900994M91	20 75
	70–345	3808671M1	100–25		25–105		40–115		70–370		20–80
	70–355	3808727M1	10–45		25–110		40–120	3900577M1	40–25		25–75
	70 365	3808841M1	10 170		40 185		40 125	3900578M1	40 25		25 80
	70 375		10 175		50 50		40 130	3900589M91	40 25		30 60
3800373M1	100 5		10 180		50 55		40 135	3900613M2	25 5		30 65
3800376M1	100 5	3809345M91	120 5		50 60		40 140		30 5		50 75
380048X1	10 235		120 10		70 415		40 145		30 10		50 80
	10 240	3809346M91	120 5		70 420		80 40		30 30		70 65
380055X91	70–285		120–10		70–425		100–25	3900691M91	10–30		70–75
	70–295	3809347M1	80–40		70–430		110–5	3900862M1	40–195	3900995M91	20–35
	70 305		120 5		70 435		110 245	3900865M1	40 205		20 55
	70 335		120 10		70 440		110 280		40 210		20 75
	70 345	3809661M1	70 5		70 445		115 5	3900868M1	40 195		20 80
	70 365		70 10		70 450		120 5		40 205	3901147M91	10 190
380059X1	20 105	3809699M92	60 35		70 455	385363X1	10 205		40 210	3901150M1	10 190
3804660M1	110 10	3810054M1	100 90		70 460	385365X1	10 220		150 25	3901152M91	10 190
3804661M1	110–10		100–95		80–35		30–30	3900869M1	40–205	3901153M1	10–190
3804662M1	110–10	3810567M3	10–195		100–5		40–135		40–210	3901154M1	10–190
3804663M1	110 10	3810570M1	10 195		100 15		40 145	3900873M1	40 205	3901155M1	10 190
3805876M91	100 15	3811722M1	70 115		100 20		50 75		40 210	3901157M1	10 190
	100 20		70 120		100 25		50 80	3900877M1	40 205	3901162M1	10 190
3806376M1	110 25	3812633M1	90 45		110 10		60 10		40 210	3901191M1	10 40
3806610M92	110 235	3813361M1	80 30		110 25		60 25	3900878M1	40 205	3901195M91	10 40
3806611M92	110 235	3813582M1	100 5		110 105		60 30		40 210	3901206M1	110 30
3806614M91	110–235	3814929M2	100–95		110–235	385373X1	130–30	3900880M1	40–205	3901477M1	10–265
	115–20	3816384M91	110–210		110–240	3900145M1	70–15		40–210	3901478M1	10–265
3806618M91	110 245	3817055M1	70 5		115 5	3900146M91	70 15	3900882M1	40 205	3901499M1	110 145
3807934M1	110 60		70 10			3900164M91	70 15		40 210		110 160
3808163M91	100 65	3818552M1	110 240			3900166M91	70 15	3900883M1	40 205	3901500M1	110 145
3808186M1	10 195	3818647M92	110 240			3900167M91	70 15		40 210		110 160
3808455M1	10 255	3818648M92	110 240			3900241M91	70 15	3900885M1	40 195	3901501M91	110 145
	10 260	3819546M1	100 5			3900242M91	70 15	3900887M1	40 195		110 160
3808462M1	10–255	3819644M1	40–15			3900245M91	25–10	3900913M91	20–20	3901502M1	110–145
	10–260		40–150			3900246M91	25–10		20–25	3901503M1	110–145
3808479M1	100 90					3900247M91	25 15	3900914M1	40 205		110 160
	100 95					3900248M91	25 15		40 210	3901504M1	110 145
3808550M2	100 85					3900255M91	25 10	3900979M1	25 35	3901505M1	110 145
	100 95					3900256M91	25 15		25 55		110 160
3808558M2	100 90					3900258M91	25 10		25 60	3901506M1	110 145
3808561M2	100 85					3900259M91	25 10	3900982M2	25 55	3901512M1	110 145
	100–95					3900281M1	120–65		25–60		110–160
						3900282M1	120–65			3901513M1	110–160

3901515M2	110 160
3901516M1	110 160
3901517M1	110 160
3901518M1	110 160
3901519M1	110 160
3901521M1	120 5
	120–10
3901522M1	120–5
	120 10
3901822M1	110 160
3901823M1	110 160
390202X1	50 75
	50 80
	90 40
3902066M91	70–280
	70–290
	70 300
	70 310
	70 320
	70 330
	70 340
	70 350
	70–360
	70–370
3902076M91	70 30
3902089M1	110 140
	110 155
3902090M1	110 140
	110 155
3902094M91	70 55
	70–120
3902116M1	110–10
3902119M91	110 10
3902120M91	110 10
3902121M3	110 10
3902122M1	110 15
3902123M1	110 15
3902124M1	110 15
3902128M1	110–20
3902129M1	110–20
	110 25
3902130M1	110 15
3902131M1	110 15
3902133M1	110 15
3902134M1	110 20
3902135M92	110 25
3902136M2	110–25
3902137M1	110–25
3902140M1	110 25
3902144M1	110 15
3902145M1	110 10
	110 20
	110 25
3902149M1	110 15
3902150M1	110–15
3902174M91	110–200
	110 205
3902175M91	110 200
	110 205
3902176M91	110 200
	110 205
3902191M1	110 220
3902200M91	70–415
	70–420
	70 425
	70 430
	70 435
	70 440
	70 445
	70 450
	70–455
	70–460
3902202M1	110 165
	110 170
3902203M1	110 165
	110 170
3902204M1	110 165
	110 170
3902205M1	110–165
	110–170
3902206M1	110 165
	110 170
3902208M1	110 165
	110 170
3902210M1	110 165
	110 170
3902211M1	110–165
	110–170
3902212M1	110 155
	110 165
3902213M1	110 165
	110 170
3902214M1	110 165
	110 170
3902214M2	110–165
	110–170
3902215M1	110 165
	110 170
3902217M1	110 165
	110 170
3902218M1	110 165
	110 170
3902225M1	40–205
	40–210
3902227M1	40 195
	150 25
3902257M2	25 35
3902299M1	110 165
	110 170
3902318M91	110 150
3902320M1	110–135
	110–150
3902322M1	110 135
	110 150
3902327M1	110 140
	110 155
3902329M2	110 155
3902331M91	110 155
3902332M1	110–140
	110–155
3902334M91	110 155
3902342M1	110 190
	110 195
3902345M1	80 5
	80 10
	80 15
	80–20
3902346M91	80–5
	80 10
3902347M91	80 5
	80 15
3902348M91	80 5
	80 10
3902349M92	80 5
	80–10
3902356M91	100–10
	110 10
3902363M1	110 5
3902365M1	110 20
	110 25
	115 5
3902366M1	110 10
3902367M1	110–10
3902368M1	110–10
3902369M1	110 10
3902370M91	110 10
3902371M1	110 10
3902372M1	110 10
3902373M91	110 15
3902376M1	80 5
	80–10
	80–15
	80 20
3902377M91	80 5
	80 10
3902378M92	80 5
	80 10
	80 15
	80–20
3902380M91	80–10
	80 20
3902383M91	80 15
	80 20
3902384M91	80 15
	80 20
3902385M92	80 15
	80–20
3902386M91	110–25
3902390M91	10 40
3902391M91	10 40
3902392M91	10 40
3902411M1	110 10
3902412M1	110 10
3902414M1	110 10
3902415M1	110–10
3902417M1	110–25
3902432M1	10 30
3902440M1	90 30
3902452M1	90 30
3902455M1	110 20
3902461M1	110 195
3902462M1	110 195
3902463M1	110–195
3902469M1	120–65
390246X1	10 5
	10 10
	10 15
	10 195
	30 15
	40 20
	40–25
	70–270
3902499M1	110 155
3902500M1	110 155
3902503M91	110 15
3902549M91	110 155
3902550M1	110 155
3902551M1	110 155
3902564M1	70–15
3902565M1	70–15
3902566M91	70 15
3902567M91	70 15
3902568M91	70 15
3902577M1	80 5
	80 10
	80 15
	80–20
3902578M1	70–5
	70 15
3902580M91	110 195
3902584M91	110 10
3902591M2	110 165
	110 170
3902614M91	70 50
3902633M1	25–35
	25–60
3902662M1	70 50
3902667M1	30 15
3902668M1	30 15
3902669M1	30 15
3902682M1	25 35
	25 55
	25–60
3902700M1	110–130
	110 170
3902701M91	110 170
3902719M1	110 145
	110 160
3902720M91	110 145
	110 160
3902732M91	70–280
3902734M91	70–320
	70 360
	70 370
3902765M1	40 10
3902766M1	40 10
3902767M1	40 10
3902768M1	40 10
3902773M1	110–10
3902774M92	20 80
	70 65
	70 75
3902778M1	10 30
3902794M1	40 35
3902795M1	40 35
3902796M91	80–15
3902797M91	70–280
	70 290
	70 300
	70 310
	70 320
	70 330
	70 340
	70–350
	70–360
	70 370
3902808M1	90 30
3902809M94	90 30
3902810M91	90 30
3902811M1	90 30
3902813M91	70 280
	70–290
	70–320
	70 330
	70 360
3902816M1	90 45
3902826M1	25 135
	25 145
3902829M1	25 135
	25–145
	25–155
3902830M1	25 135
	25 145
3902832M1	25 135
	25 145
3902833M1	25 135
	25 145
3902836M1	25–135
	25–145
3902838M1	25 145
	25 155
3902842M1	25 135
	25 145
3902843M1	25 135
	25 145
3902850M1	25–145
	25–155

3902859M1	25 145
	25 155
3902860M1	25 145
	25 155
3902862M1	25 145
	25 155
3902863M1	25–135
	25–145
	25 155
3902866M1	25 145
	25 155
3902869M91	110 50
390287X1	110 270
	110 275
3902881M1	10–195
3902888M1	40–155
3902889M1	40 155
3902890M1	40 155
3902891M1	40 155
3902892M1	40 155
3902893M1	40 155
3902894M1	40 155
3902896M1	40–155
3902897M1	40–155
3902898M1	40 155
3902899M1	40 155
3902900M1	40 155
3902901M1	40 155
3902902M1	40 155
3902906M1	40 155
3902932M1	70–275
3902933M1	70–275
3902934M1	70 275
3902935M1	70 275
3902936M1	70 275
3902937M1	70 275
3902938M91	70 275
3902940M1	25 135
	25–145
	25–155
3902941M1	25 135
	25 145
	25 155
3902942M1	25 145
	25 155
3902943M1	25 135
	25–145
	25–155
3902944M1	25 145
	25 155
3902945M2	25 145
	25 155
3902946M91	25 145
	25 155
3902947M1	25–145
	25–155
3902955M1	25 145
	25 155
3902961M91	70 275
3902974M91	40 95
3902975M91	40 95
3902976M91	40 95
3902977M91	40–95
3902978M91	40–95
3902979M91	40 95
3902980M91	40 95
3902981M91	40 95
3902982M1	40 95
3902983M91	40 95
3902984M91	40 100
3903017M1	40–80
3903018M91	70–115
	70 120
3903019M1	70 115
	70 120
3903020M91	70 45
3903021M1	70 115
	70 120
3903022M1	70–115
	70–120
3903032M91	110 270
	110 275
3903033M1	110 270
	110 275
3903034M1	110 270
	110 275
3903035M1	110–270
	110–275
3903036M1	110 270
	110 275
3903037M91	110 270
	110 275
3903038M91	110 275
3903039M91	110 270
	110–275
3903040M1	110 270
	110 275
3903041M91	110 275
3903042M1	110 270
	110 275
3903044M1	110 270
	110–275
3903045M91	110–270
	110 275
3903046M91	110 275
3903047M91	110 270
	110 275
3903048M1	110 270
	110 275
3903049M1	110–270
	110–275
3903050M1	110 270
	110 275
3903051M91	110 270
	110 275
3903052M1	110 270
	110 275
3903053M1	110–270
	110–275
3903054M1	110 270
	110 275
3903055M91	110 275
3903056M91	110 275
3903057M91	110 270
	110 275
3903058M91	110–270
	110–275
3903059M91	110 270
	110 275
3903060M91	110 275
3903061M91	110 275
3903062M1	110 270
	110 275
3903063M1	110–270
	110–275
3903064M1	110 270
	110 275
3903065M1	110 270
	110 275
3903066M1	110 270
	110 275
3903067M1	110–270
	110–275
3903068M1	110 270
	110 275
3903070M91	110 255
	110 265
3903071M91	110 255
	110 265
3903072M91	110–255
	110–265
3903073M1	110 255
	110 265
3903074M1	110 255
	110 265
3903075M1	110 255
	110 265
3903076M1	110–255
	110–265
3903077M1	110 255
	110 265
3903078M91	110 255
	110 265
3903079M91	110 255
	110 265
3903080M1	110–255
	110–265
3903081M1	110 255
	110 265
3903082M1	110 255
	110 265
3903083M91	110 255
	110 265
3903084M91	110–265
3903085M91	110–255
	110 265
3903086M91	110 255
	110 265
3903087M1	110 255
	110 260
	110 265
3903088M91	110–255
	110–265
3903092M1	110 255
	110 265
3903093M1	110 255
	110 265
3903094M1	110 255
	110 265
3903098M1	110–255
	110–265
3903099M91	110 255
	110 265
3903100M91	110 255
	110 265
3903101M1	110 255
	110 265
3903102M1	110–255
	110–265
3903117M1	110 255
	110 265
3903118M1	110 255
	110 265
3903129M91	110 270
3903130M1	110 270
3903132M91	110–270
3903133M91	110–260
3903135M91	110 270
3903136M1	110 270
3903137M91	110 270
3903138M91	110 270
3903139M91	110 270
3903140M91	110 270
3903141M91	110–270
3903142M1	110–255
	110 260
3903145M1	110 260
3903148M1	110 260
3903152M1	110 260
3903153M1	110 260
3903164M91	110 270
	110–275
3903180M91	110–270
3903181M91	90 75
	90 85
3903186M1	110 10
3903187M1	110 10
3903190M1	40 155
3903191M91	40 155
3903192M1	40–155
3903193M1	40–155
3903194M1	20 70
3903195M1	20 70
3903199M91	25 145
	25 155
3903200M1	100 25
3903209M1	10 265
3903210M1	10–265
3903214M91	80–20
3903215M1	40 35
3903218M1	130 25
3903219M1	130 25
3903220M1	130 25
3903221M1	130 25
3903222M1	130 25
3903223M1	70–25
3903224M1	70–25
3903225M1	70 25
3903226M1	70 25
3903227M1	70 25
3903228M1	70 25
3903230M1	70 25
3903232M1	70 25
3903233M1	70–25
3903234M1	70–25
3903235M1	70 25
3903236M1	70 25
3903238M1	70 25
3903239M1	70 25
3903243M1	70 25
3903255M91	10 190
3903256M91	10–190
3903257M91	10–190
3903258M91	10 190
3903259M91	10 190
3903260M92	10 190
3903261M92	10 190
3903262M91	10 190
3903263M91	10 190
3903264M91	40–95
3903266M91	40–95
3903267M91	40 95
3903268M91	40 95
3903269M1	40 95
3903270M1	25 145
	25 155
3903274M91	110 260
3903275M1	110–260
3903276M91	110–260
3903277M1	110 260
3903278M1	110 260
3903279M1	110 260
3903280M91	110 260
3903281M91	110 260
3903282M1	110 260
3903283M1	110–260
3903284M1	110–260

3903285M91 110 260
3903286M91 110 260
3903287M91 110 260
3903288M91 110 260
3903289M1 110 260
3903290M91 110 260
3903291M1 110–260
3903292M1 10–245
3903293M1 10 245
3903294M1 10 245
3903295M1 10 245
3903296M1 10 245
3903297M1 10 245
3903298M1 10 245
3903299M1 10–245
3903300M91 10–245
3903301M91 10 245
3903302M91 70 25
3903303M91 70 25
3903311M91 25 135
3903312M91 25 135
25 145
3903314M91 40–45
40–195
3903317M91 40 195
3903318M91 10 35
3903319M91 10 35
3903320M91 10 35
3903321M91 10 35
3903322M1 10 35
3903323M91 10–35
3903324M91 10–35
390333X1 80 105
80 110
80 115
80 120
3903344M91 100 5
3903345M91 100 5
390336X1 30–20
3903394M91 40–90
40 95
3903397M91 40 90
3903398M91 40 90
3903399M91 110 240
3903400M91 110 240
3903401M91 70 165
3903402M1 70–165
3903403M1 70–165
3903404M1 70 165
3903405M1 70 165
3903406M1 70 165
3903407M1 70 165
3903413M11 150 45
3903414M11 150 50
3903415M11 150–45
3903416M11 150–50
3903431M91 40 90
3903445M91 25 145
25 155
3903446M91 25 145
25 155
3903447M1 25 145
25–155
3903448M1 25–145
25 155
3903449M91 25 145
25 155
3903450M91 25 145
25 155
3903451M1 25 145
25–155
3903452M1 90–30
3903453M91 20 55
3903454M1 70 405
3903455M1 70 405
3903456M1 70 405
3903457M1 70 405
3903458M1 70 405
3903459M1 70–405
390345X1 110–120
110 130
3903460M1 70 405
3903461M91 70 405
3903462M1 70 405
3903463M91 70 405
3903464M1 70 405
3903465M1 70–405
3903466M1 70–405
3903467M1 70 405
3903468M1 70 405
3903475M1 25 155
3903476M1 25 145
3903477M1 25 135
3903493M91 70 145
3903494M91 80–5
3903495M91 80–10
3903497M91 40 170
3903504M1 110 10
3903507M1 70 25
3903526M1 150 25
3903533M91 150 25
3903558M1 25 55
3903559M1 25–55
3903571M91 40–170
3903572M91 40 170
3903573M91 40 170
3903585M1 20 35
20 55
3903586M1 20 35
20 55
3904102M91 110–50
3904103M1 110–50
3904104M1 110 50
3904181M91 10 40
3904184M1 10 40
3904185M1 10 40
3904186M1 10 40
390419X1 70 115
70–120
390468X1 100–10
390469X1 70 430
70 440
70 455
70 460
80 35
90 25
90–35
110–105
110 125
120 5
390538X1 40 25
390597X1 60 65
110 80
110 85
110–285
390721X1 40–170
390734X1 10 20
10 25
10 185
10 195
10 205
10 215
25–120
40–95
40 170
70 5
70 10
70 160
90 20
100 25
110–285
120–60
130 30
130 35
390735X1 25 70
25 120
110 285
130 30
130–35
390738X1 10–170
60 55
390809X1 130 35
390830X1 10 250
390864X1 100 30
100 35
390876X1 60 35
390881X1 110–285
390912X1 10–205
390933X1 25 75
25 80
390950X1 25 75
25 80
390971X1 10 70
10 185
10 305
10 310
25 120
25 130
25–140
25–150
40 30
40 130
40 135
40 140
40 145
50 60
50–100
50–110
50 115
70 415
70 420
70 425
70 430
70 435
70–440
70–445
70 450
70 455
70 460
70 465
70 470
90 35
90–65
90–70
100 10
100 15
100 20
100 65
110 5
110 20
110–30
110–200
110 295
390972X1 10 10
10 170
10 175
10 180
10 185
10 195
10–220
10–225
10 230
10 235
10 240
10 270
10 275
10 280
10–285
10–290
10 295
10 300
10 305
20 90
20 95
25 115
25–120
25–130
25 140
25 150
30 25
40 30
40 35
40 40
40–45
40–180
40 185
50 60
70 35
70 40
70 185
70 190
70–195
70–390
70 395
70 400
70 415
70 420
70 425
70 430
70–435
70–440

70 445
70 450
70 455
70 460
70 465
90 90
90–105
100–25
100 30
100 35
100 60
110 5
110 30
110 40
110–70
110–80
110 85
110 100
110 105
110 115
110 185
110 250
110–265
110–270
110 275
110 280
110 285
110 295
115 5
120 10
120–35
120–40
120 45
120 55
120 65
390973X1 20 90
20 95
70 5
70–10
390974X1 60–40
390975X1 40 85

390990X1 10 180
10 235
10 240
80 30
80 35
90 25
110–30
120–30
390995X1 120 30
391005X1 10 5
10 10
10 15
391018X1 40 85
391025X1 110 10
110–25
391026X1 110–245
115 5
391038X1 10 180
10 250
10 255
10 260
70 225
70–230
70–235
70 240
70 245
90 75
90 80
90 155
110 5
110–10
110–30
110 65
110 70
110 75
110 125
115 5
115 20
120–20
120–40

391039X1 10 195
10 225
10 230
10 235
10 240
10 255
10–260
10–275
25 120
110 120
110 130
110 185
110 190
110 255
110–260
110–265
391061X1 50 20
50 90
391074X1 25 75
25 80
25 130
25 140
25–150
50–75
50 80
80 85
80 90
80 95
80 100
90 75
100–15
100–20
110 5
110 65
115 5
391120X1 40 160
391129X1 20 20
20 25
50–10
50–15
50 40
50 45
391148X1 110 255
110 265
391233X1 60 70
391244X1 20 80
110–205
391261X1 50–95

391265X1 70 45
70 410
391269X1 100 60
391286X1 10 290
10 295
391289X1 90 90
110–20
110–25
110 190
391290X1 20 85
20 90
20 95
40 150
70 175
70–180
391329X1 60–5
391332X1 40 140
40 145
40 200
391339X1 60 85
391349X1 25 130
25 140
60–35
90–10
90 15
90 20
90 25
90 50
110 230
391354X1 100 10
100–20
391371X1 40–150
391376X1 50 85
391403X1 40 50
391415X1 110 285
391563X1 50 35
50 45
70 410
391565X1 110–255
391832X1 50–90
391883X1 10 290
10 295
80 35
90 35
391884X1 80 85
80 90
80–95
80–100

391889X1 100 30
100 35
115 5
391891X1 60 10
391989X1 20 20
20 25
20–35
20–55
20 65
50 50
50 55
50 105
60 15
70 145
70–150
110–250
391990X1 110 255
110 265
392054X1 60 65
392224X1 70 380
70 385
392235X1 10 290
10–295
392310X1 20–85
130 30
392376X1 25 85
25 95
392404X1 20 85
20 90
20 95
70–175
70–180
392420X1 60 70
392463X1 10 290
10 295
25 115
40 185
392531X1 70 45
392536X1 90–35
392758X1 40–170
3930274M92 30 50
30 55
393764X1 20 105

394367X1 20 85
25 120
40 20
40 25
40 30
110 30
110–105
110–295
120 30
394842X1 20 65
395520X1 40 95
395579X1 110 40
409965M1 120 35
4222012M1 10 50
10–65
4222016M91 10–45
4222017M1 10 50
4222041M1 10 65
4222043M1 10 50
4222069M1 10 75
4222083M1 10 105
4222084M1 10 105
4222099M1 10–120
4222100M1 10–120
4222105M91 10 150
4222128M1 10 50
4222129M1 10 50
4222131M1 10 55
4222132M1 10 55
4222133M1 10 55
4222134M91 10–55
4222135M1 10–55
4222136M91 10 55
4222139M1 10 60
4222140M1 10 60
4222141M1 10 60
4222144M1 10 60
4222146M1 10 60
4222147M91 10–60
4222148M1 10–60
4222149M91 10 60
4222153M1 10 135
4222155M1 10 130
10 135
4222156M1 10 75
4222157M1 10 75
4222158M1 10–75
4222159M1 10–75

4222161M1	10 100
4222165M91	10 90
4222168M1	10 80
4222170M1	10 60
4222171M1	10 140
	10 145
4222182M1	10–105
4222190M1	10–105
4222192M1	10 105
4222193M1	10 105
4222194M1	10 105
4222197M1	10 45
4222198M1	10 90
4222200M1	10 80
4222213M1	10–140
	10–145
4222217M1	10 140
	10 145
4222219M91	10 150
4222228M1	10 60
4222234M1	10 125
4222236M1	10 95
4222237M1	10–80
4222238M1	10–80
4222239M1	10 80
4222240M1	10 80
4222241M1	10 95
4222245M1	10 95
4222246M91	10 85
4222247M1	10 85
4222248M1	10–85
4222252M91	10–105
4222255M1	10 105
4222256M1	10 105
4222260M1	10 145
4222261M1	10 145
4222262M1	10 145
4222279M91	10 55
4222294M1	10–105
4222298M1	10–120
4222301M1	10 45
4222306M91	10 140
	10 145
4222322M1	10 95
4222333M1	10 60
4222334M91	10 75
4222335M91	10–75
4222338M1	10 90
	10 95
4222340M1	10 90
	10 95
4222354M1	10 60
4222439M1	10 50
	10–60
4222451M1	10–90
4222497M91	10 50
4222499M1	10 95
4222507M1	10 125
4222512M1	10 50
4222546M1	10 125
4222547M1	10 125
4222548M1	10–125
4222549M1	10–125
4222550M1	10 125
4222551M91	10 125
4222552M1	10 60
4222702M1	10 125
4222709M1	10 105
4222712M1	10 120
4222713M1	10–65
4222828M1	10–100
4222832M1	10 105
4222836M1	10 120
	10 130
	10 135
4222841M91	10 130
	10 135
4222842M1	10–130
	10–135
4222845M1	10 130
4222847M1	10 130
4222848M1	10 130
	10 135
4222849M1	10 130
	10 135
4222850M1	10–130
4222851M1	10–130
4222874M1	10 90
	10 95
4222878M91	10 5
	10 10
	10 15
4222894M1	10 60
4222895M1	10–60
4222896M1	10–60
4222897M1	10 60
4222930M1	10 65
4222976M1	10 105
4223010M1	10 95
	10 115
	10 120
4223019M1	10–95
4223085M1	10–105
4223101M91	10 130
4223102M1	10 135
4223106M1	10 105
4223107M1	10 105
4223432M91	10 55
4223433M91	10 55
4223434M91	10–55
4223435M91	10–55
4223442M1	10 60
4223472M1	10 100
4223508M1	10 80
4223509M1	10 115
4223581M1	10 60
4223587M1	10 50
4223590M1	10–95
4223594M91	10–60
4223596M1	10 100
4223597M1	10 105
4223598M1	10 105
4223669M1	10 80
4223715M1	10 105
4223716M1	10 105
4223717M1	10–105
4223718M1	10–105
4223723M91	10 65
4223724M1	10 65
4223725M1	10 65
4223727M1	10 90
	10 95
4223728M1	10 90
	10–95
4223731M91	10–140
	10 145
4223732M91	10 160
4223733M91	10 160
4223751M1	10 90
	10 95
4223754M1	10 130
4223757M91	10–60
4223759M91	10–105
4223760M91	10 105
4223761M1	10 105
4223763M1	10 130
	10 135
4223764M91	10 130
	10 135
4223765M1	10–90
4223766M1	10–90
4223767M91	10 85
4223768M1	10 80
4223769M91	10 140
4223770M1	10 135
4223771M1	10 135
4223772M1	10 95
4223773M1	10–95
4223774M1	10–95
4223777M91	10 95
4223782M1	10 95
4223841M1	10 135
4223842M1	10 135
4223860M91	10 110
4223862M1	10 105
4223884M91	10–140
	10–145
4223885M1	10 140
	10 145
4223886M1	10 140
	10 145
4223888M1	10 125
4223908M91	10 135
4223912M91	10–125
4223933M1	10–75
4223935M91	10 65
4223936M1	10 80
4223950M91	10 125
4223951M91	10 125
4223953M1	10 105
4223966M1	10 90
4223968M1	10–135
4223969M1	10–95
4223970M1	10 95
4223977M1	10 95
4223987M1	10 60
4224003M1	10 120
4224171M1	10 105
4224385M91	10 50
5015255M1	80–35
5015257M1	80–35
5015264M2	80 35
5015287M93	110 105
5015288M93	110 105
5015292M6	110 105
5015293M5	110 105
5015296M2	110 105
5015298M93	110–105
5015330M3	70–40
5015465M2	110 105
5015466M2	110 105
5015727M92	110 70
5015730M3	110 70
5015731M91	120 20
5015739M91	120 50
5015903M2	70–35
	70–40
5015906M3	70 35
5016001M91	110 30
5016401M91	70 160
5016845M1	120 5
	120 60
5016887M2	120 60
509816M2	130–70
511411M3	130–70
518826M1	10 200
519954M1	30 35
	30 40
	30 45
519955M1	30 35
	30 40
	30–45
519956M1	30–35
	30 40
	30 45
519957M1	30 35
	30 40
	30 45
521401M2	30 60
523784M3	110–290
539613M1	100–100
621235M1	120 5
	120 10
	120 15
	120 20
	120 25
656632M4	120 10
70917032	80–35
70921230	120–60
70921325	70 80
	70 90
70921887	70 140
70922195	70 380
	70 385
70923358	70 170
70923561	20–55
	20–65
70923591	30 65
	30 70
	70 115
	70 120
70923737	60 55
	70 145
	70–150
	70–235
70923841	70 55
	70 60
	70 115
	70 120
70924776	70 140
70925617	70 35
	70–40
70926191	20–5
	20 10
70928348	120 50
70934293	70 170
70934582	25 120
70935768	70 160
70950947	130 20
71129920	80–130
71379435	120–15
72161441	100 10
72501110	120 50
72502305	80 35
72502614	80 130
72505208	80 25
72506343	130 20
72506345	130–20
72506938	130–20
72508983	130 20
72508984	130 20
72508986	130 20
72508987	130 20
72508990	130 20
72511856	70 170
72511858	70–170
72512518	80–35

72514301 70 170
72514302 70 170
72514303 70 170
731033M1 10 100
731250M1 10 110
10 115
731330M1 10–75
731338M1 10–225
10 230
10 235
10 240
731352M1 10 140
10 145
731354M1 10 50
10–60
731410M1 10–60
731516M1 10 75
731563M1 10 140
10 145
731654M1 10 80
731947M1 10 50
731996M1 10 50
10–105
731997M1 10–130
733072M1 10 50
733680M1 20 15
733728M1 10 100
733811M1 10 75
733812M1 10 75
733817M1 10 75
733868M1 10–110
10–115
733869M1 10 110
10 115
735111M1 10 140
10 145
735220M1 10 125
735742M1 10 55
735743M1 10–55
735852M1 10–100
736640M1 10 70
736868M1 10 50
737734M1 10 145
739513M91 10 75
739562M1 10 120
740597M1 10 65
742536M1 10–55
742692M1 10–120
743028M1 10 115
744397M1 10 120
744534M1 10 120
745489M1 10 65
745540M1 10 65
745662M1 10 60
745663M1 10–60
746259M1 10–50
10 60
747128M1 10 55
747129M1 10 55
747557M1 10 100
747673M1 10 140
747674M1 10 110
747679M1 10–140
10–145
10 225
10 235
747680M1 10 140
10 145
747961M1 10 95
748072M91 10 100
748074M1 10–55
748149M1 10–50
748160M1 10 120
748201M1 10 55
748244M1 10 120
748315M1 10 55
748393M1 10 50
762548M1 10 200
763786M1 130–70
825776M1 30–50
827276M1 10 110
10 115
831180M1 25 40
831196M1 70 55
70 60
70 115
70–120
831225M1 40–120
831452M1 20 35
20 80
70 285
70 295
70 305
70 315
70–325
70–335
70 345
70 355
70 365
70 375
831461M1 10 155
831496M1 20 85
831497M1 20–55
30–60
30 65
30 70
60 50
60 55
70 55
70 60
70–65
70–70
70 75
70 105
70 115
70 120
70 145
70 150
831564M1 130–70
832038M1 50–90
832297M1 10 300
10 305
10 310
833062M1 120 40
120 45
120 50
833083M1 40–120
834820M1 50–90
835007M91 70 130
835013M91 70 285
70 295
70 305
70 315
70 325
70 335
70–345
70–355
70 365
70 375
835024M1 20 55
70 285
70 295
70 305
70–335
70–345
70 365
835026M1 70 140
70 160
835130M1 70 115
70 120
836218M91 10 155
842332M1 50–95
70–55
70 60
70 115
70 120
70 140
851150M1 70 45
851258M1 25 5
25–85
25–90
852140M1 70 140
880712M1 10 305
10 310
884691M1 25 5
884748M1 10 225
10 230
10–235
10–240
885518M5 30 50
891947M1 30 50
892170M2 30 60
892171M2 30 60
892172M2 30 60
892173M2 30 60
894225M1 110–35
908543M1 120 20
120 25
961866M1 120 5
120 10
963333M1 110 220
968634M91 25 45
25–50
50–35
50 40
50 45
973052M1 50 40