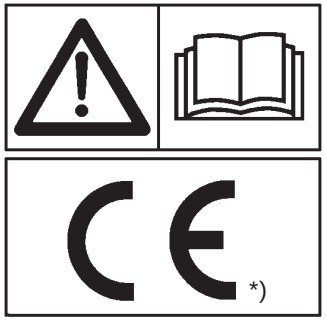

GASPARDO

MASCHIO GASPARDO S.p.A.

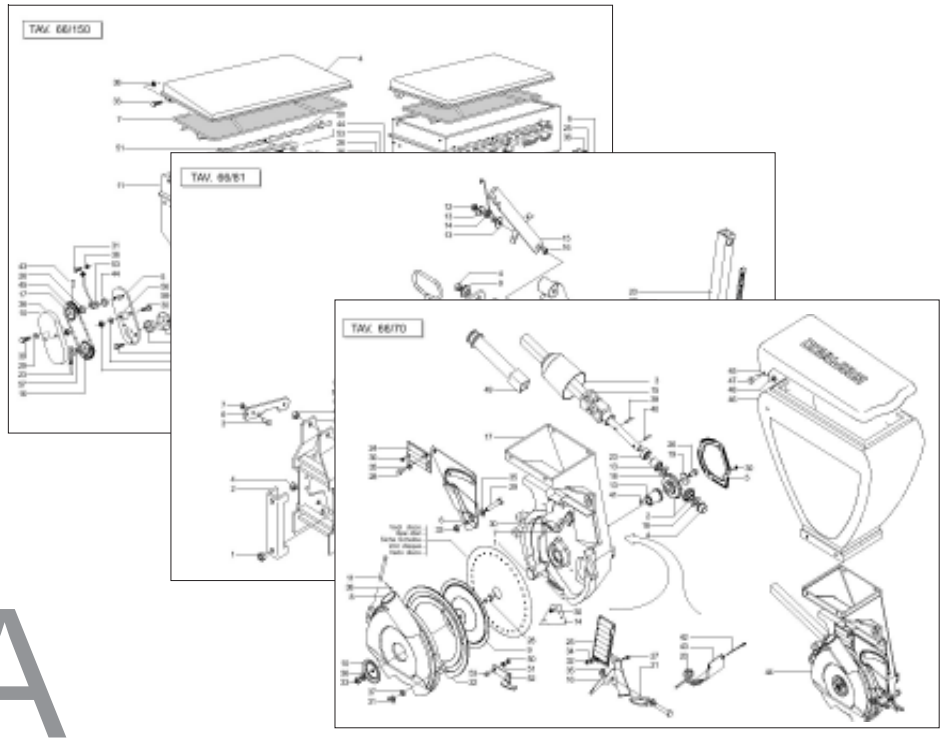

SP DORADA

Cod: G19530197 12.2007

*) Valido per Paesi UE
*) Valid for EU member countries
*) Valable dans les Pays UE
*) Gilt für EU-Mitgliedsländer
*) Válido para Países UE

IT PARTI DI RICAMBIO
EN *SPARE PARTS*
DE ERSATZTEILE
FR *PIECES DÉTACHÉES*
ES PIEZAS DE REPUESTO

ITALIANO

PARTI DI RICAMBIO

Le ordinazioni delle parti di ricambio vanno fatte presso i nostri concessionari di zona e devono essere sempre corredate dalle seguenti indicazioni:

- **Tipo, modello e numero di matricola dell'attrezzatura.** Tali dati sono stampigliati nell'apposita targhetta di cui è dotata ogni attrezzatura.

- **Numero di codice della parte richiesta** rilevabile dal catalogo ricambi.

- **Descrizione del particolare e quantità richiesta.**

- **Numero della tavola.**

- **Mezzo di trasporto.** Nel caso questa voce non sia specificata, la Ditta Costruttrice, pur dedicando a questo servizio una particolare cura, non risponde di eventuali ritardi di spedizione dovuti a cause di forza maggiore.
Le spese di trasporto si intendono sempre a carico del destinatario. La merce viaggia a rischio e pericolo del committente anche se venduta franco destino.

NOTA: Il termine (**Dx**) **Destro** o (**Sx**) **Sinistro** della macchina o di parti di essa, è inteso guardando la macchina dalla parte posteriore. Le eccezioni saranno indicate.

ENGLISH

SPARE PARTS

Orders must be transmitted through our area dealers and should always include the following indications:

- ***Type, model and serial number of the machine.*** *These data are punched on the data plate with which every implement is equipped.*

- ***Code number of the required spare part.*** *This will be found in the spare parts catalogue.*

- ***Description of the part and required quantity.***

- ***Table number.***

- ***Means of dispatch.*** *If this item is not indicated, the Manufacturer, while dedicating particular care to this service, shall not be held responsible for delays in delivery caused by cases of force majeure.*
Transport expenses shall always be at the consignee's charge. The goods travel at the purchaser's risk and peril even when sold ex destination.

NOTE: *The symbols* ***(Dx) right*** *and* ***(Sx) left****, concerning the machine or single parts of it, are referred, as in the figure, to a rear view of them. Exceptions will be indicated.*

DEUTSCH

ERSATZTEILE

Die Bestellungen müssen bei unseren Gebietshändrer aufgegeben werden. Bei der Bestellung sind stets die folgenden Angaben zu machen:

- **Typ, Modell und Serien-Nummer des Geräts**. Diese Daten stehen auf dem Typenschild, mit dem jedes Gerät versehen ist.

- **Artikel Nr. der erforderlichen Ersatzteile.** Diese stehen im Ersatzteil-Katalog.

- **Beschreibung des Ersatzteils und die erforderliche Stückzahl.**

- **Tafelnummer.**

- **Versandmittel.** Wenn dieser Punkt nicht spezifiziert wird, haftet die Herstellerfirma nicht für etwaigen Lieferverzug aufgrund höherer Gewalt, auch wenn er diesen Service besonders aufmerksam abwickelt.
Die Frachtkosten gehen dagegen immer zu Lasten des Empfängers. Die Ware reist auf Gefahr und Risiko des Auftraggebers, auch wenn frei Haus Verkauft vereinbart worden ist.

N.B.: Die Merkzeichen (**Dx**) **rechts** und (**Sx**) **links** betreffen eine rückwärtige Aussicht der Maschine oder Teile von ihr (siehe Bild). Ausnahmen werden gezeigt.

FRANÇAIS

PIECES DÈTACHÈES

Les ordres doivent être effectués auprés de nos concessionaires de zone en précisant les indications suivantes:

- ***Type, modéle et numéro de série de la machine****. Ces données sont gravées sur la plaque d'identification de chaque outil.*

- ***Numéro de code de la piéce détachée*** *indiqué sur le catalogue des piéces détachées.*

- ***Description de la piéce et quantité requise****.*

- ***Numéro de plan****.*

- ***Moyen d'expédition****. Si cette rubrique n'est pas indiquée, le Constructeur, bien que soucieux de ce service, ne répond pas des retards d'expédition pour des causes de force majeure.*
Les frais de transport sont toujours à la charge du destinataire. La marchandise voyage aux risques et périls de l'acheteur même si vendue franco de port.

N.B.: *Les références* ***(Dx) droit*** *et* ***(Sx) gauche*** *de la machine ou des parties de la même, est entendue, comme de la figure, en regardant la machine de derriere dans le sens de marche.*

ESPAÑOL

RESPUESTOS

Los pedidos han de efectuarse en nuestros consesionarios de zona y deben incluir siempre las siguientes indicaciones:

- **Tipo, modelo y número de matrícula del equipo**. Dichos datos están impresos en la relativa placa presente en el equipo.

- **Número de código de la parte requerida** presente en el catálogo respuestos.

- **Descripcíon de la pieza y cantidad requerida**.

- **Numero de illustración**.

- **Medio de transporte**. En caso que este ítem no esté especificado, el Fabricante, aún prestando la debidas consideraciones para este aspecto, no responde por eventuales retardos de env'o debidos a causas de fuerza mayor.
Los gastos de transporte se consideran siempre a cargo del destinatario. La mercandería viaja bajo riesgo y peligro del comprador, incluso cuando se vende franco destino.

N.B.: La refencia (**Dx**) **derecha** o (**Sx**) **izquierda** de la máquina o de sus componentes, se entiende, como en la figura, mirando la máquina por la parte trasera. Se indicarán las excepciones.

N° Tavola	*Descrizione*	*Pagina*
TAV. 014	Telaio e attacco 3 punti	4
TAV. 020	Comando segnafile meccanico	6
TAV. 035	Segnafile	8
TAV. 293	Segnafile rinforzato	10
TAV. 043	Impianto oleodinamico segnafile	12
TAV. 053	Depressore	14
TAV. 063	Scatola di rinvio elemento	16
TAV. 075	Distributore semi	18
TAV. 230	Dischi di semina	22
TAV. 084	Telaio elemeto	24
TAV. 096	Elementi assolcatori	26
TAV. 103	Ruote di compressione	28
TAV. 112	Bilanciere	30
TAV. 263	Esclusione elettrica file di semina	34
TAV. 125	Cambio	36
TAV. 135	Ruote di trasmissione	38
TAV. 135-A	Ruote di trasmissione anteriori	42
TAV. 320	Scaletta ruote portanti	46
TAV. 283	Ruote regolabili	48
TAV. 221	Presa di potenza posteriore	50
TAV. 273	Kit ruote per terreni sassosi - Flangiatura ruote	54
TAV. 244	Supporti serbatoi spandiconcime ferro	56
TAV. 251	Serbatoi spandiconcime ferro	58
TAV. 143	Supporti serbatoi spandiconcime plastica	62
TAV. 153	Serbatoi spandiconcime plastica	64
TAV. 304	Supporti serbatoio spandiconcime unico	68
TAV. 314	Serbatoio spandiconcime unico	70
TAV. 165	Elementi di concimazione	74
TAV. 204	Speedy set	76
TAV. 191	Concimazione pneumatica	78
TAV. 175	Microgranulatore	80
TAV. 182	Trasmissione spandiconcime e microgranulatore	84
TAV. 331	Applicazione doppio microgranulatore	86
TAV. 212	Accessori	88
TAV. 340	Cardani	90

TAV. 14

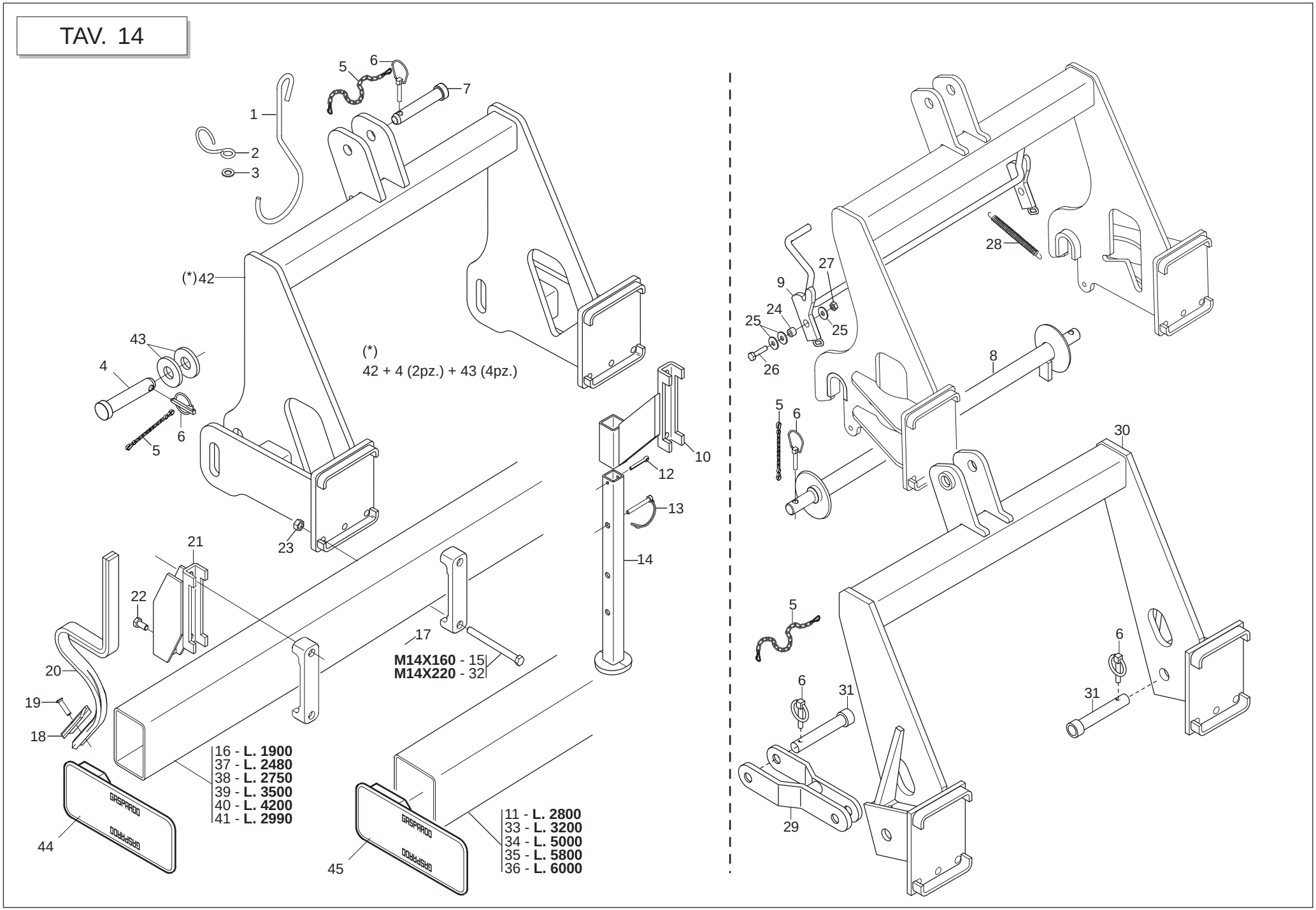

GASPARDO

cod. G19530197

TELAIO E ATTACCO 3 PUNTI

TAV. 14

Pos.	Cod.	Descrizione	Description	Description	Benennung	Descripcion
1	F20120400	GANCIO SOSTEGNO CARDANO	SHAFT HOOK	SUPPORT CARDAN	GELENKWELLE - HACKEN	SOPORTE CARDAN
2	G65336004	MOLLA SPEC.ZN AGG.SEMINAT. SP	SPEC SPRING- ZN ADD. SEEDER SP	RESSORT SPEC. ZN ATTELAGE SEME	SPEZIALFEDER ZN SZELEM. KUPPL.	MUELLE ESPEC. ZN CONEX. SEMBRA
3	F01410088	ROS.M14 15X 28X2,5 U6592 ZN	WAS.M14 15X 28X2,5 U6592 ZB	RON.M14 15X 28X2,5 U6592 ZB	SCH.M14 15X 28X2,5 U6592 ZB	ARA.M14 15X 28X2,5 U6592 ZB
4	F20100074	SPINA 1°-2° PUNTO ZN	PIN FOR BAR LINKAGE	GOUJON ATTELAGE BARRE	VERB.BOLZEN SCHUTZHOLM	PERNO ATAQUE BARRA
5	G13812311	CATENELLA CON MOSCHETTONE	CHAIN WITH SPRING CATCH	CHAINETTE AVEC MOUSQUETON	KETTE MIT KARABINERHAKEN	CADENA CON GANCHO
6	F02200507	SPINA SCATTO D. 9 B/83 ZN	SNAP PIN D 9 B/83	FICHE A DETENTE D 9 B/83	EINRASTSTIFT D 9 B/83	CLAVIJA DE MUELLE D 9 B/83
7	F20100062	SPINA GASPARDO 25X128 ZN	FOR 3RD POINT	GOUJON 3EME POINT	BOLZEN 3. PUNKT	PERNO 3 PUNTO
8	G15211270	BARRA 1°-2° PUNTO	1-2 LINKAGE BAR	BARRE 1.-2. P.	STAB 1.-2. P.	BARRA 1.-2. P.
9	G15211411	FERMO ATTACCO RAPIDO	QUICK LINKAGE STOP	ARRET ATTELAGE RAPIDE	FESTSTELLVORRICHTUNG SCHNELLAN	BLOQUEO CONEXION RAPIDA
10	G15112711	SUPPORTO PUNTELLO	PROP SUPPORT	SUPPORT ETRESILLON	STsTZLAGER	STsTZLAGER
11	G22505031	TUBO TELAIO L=2800	FRAME PIPE L=2800	TUBE BATI L=2800	ROHR RAHMEN L=2800	TUBO BASTIDOR L=2800
12	F02200246	COPIGLIA 6X 45 U1336 ZN	SPLIT PIN 6 X45 1336 GALVAN.	GOUPILLE 6 X45 1336 ZN	SPLINT 6 X45 1336 ZN	PASADOR 6 X45 1336 ZN
13	F02200584	SPINA SICUR. D. 12X70 ZN	GALVAN. SAFETY PIN D.12X70	GOUPILLE DE S+CURIT+ D.12X70 Z	SCHERSTIFT D.12X70 ZN	PASADOR DE SEGURIDAD D 12X70 Z
14	G15112691	PUNTELLO ST250	PROP ST250	ETRESILLON ST250	STsTZE ST250	PUNTAL ST250
15	F01020225	VITE M14X 2X160 U5737 8.8 BR	BOLT M 14 X160 5737 8.G	VIS M 14 X160 5737 8.G	SCHRAUBE M 14 X160 5737 8.G	TORNILLO M 14 X160 5737 8.G
16	G16610040	TUBO RET.150X100X1900	RECTANGULAR PIPE 150X100X1900	TUBE RECTANGULAIRE 150X100X190	RECHTECK.ROHR150X100X1900	TUBO RECT.150X100X1900
17	G19204030	SCONTRO FISS.150 2F D15				
18	F20120017	VOMERO REVERSIBIL.F37 40X5X135	SWIVEL PLOUGH-SHARE F37 40X5X1	SOC REVERS. F37 40X5X135	UMKEHRBARE SCHAR F37 40X5X135	REJAS REVERS. F37 40X5X135
19	G67002011	BULLONE TESTA OVALE M10X35	OVAL HEAD BOLT M10X35	BOULON TETE OVALE M10X35	SCHRAUBE OVALER KOPFM10X35	PERNO CABEZA OVALADA M10X35
20	G22270462	MOLLA ROMPITRACCIA VERNICIATA	PAINTED TRACE BR. SPRING	RESSORT BRISEUR DE TRACES VERN	FEDER SPURMESSER LACKIERT	MUELLE ROMPEHUELLA BARNIZADA
21	G15471612	SUPPORTO ROMPITRACCIA Q.150	ROW-BREAKER SUPPORT 150	SUPPORT EFFACEUR DE TRACES 150	HALTERUNG SPURAUFREISSER 150	SOPORTE BORRAHUELLAS 150
22	F01020510	VITE M12X1,75X30 U5739 8.8 ZN	BOLT M 12X30	VIS M 12X30	SCHRAUBE M 12X30	TORNILLO M 12X30
23	F01200306	DADO M14X 2 U5588 6.8 ZN	NUT M14X2	ECROU M14X2	MUTTER M14X2	DADO M14X2
24	G18800320	BOCCOLA 10,25X18X13	BUSHING 10,50X18X31	BOITE 10,50X18X31	B_CHSE 10,50X18X31	CASQUILLO 10,50X18X31
25	F01420060	ROS.M10 10,5X 30X2,5 U6593 ZN	WASHER 10,5X30	RONDELLE 10,5X30	SCHEIBE 10,5X30	ARANDELA 10,5X30
26	F01020484	VITE M10X 1,5X45 U5739 8.8 ZN	BOLT 10X45 5739 8.G GALVANIZED	VIS 10X45 5739 8.G ZN	SCHRAUBE 10X45 5739 8.G ZN	TORNILLO 10X45 5739 8.G ZN
27	F01220033	DADO M10X 1,5 D980 8 ZN	NUT M10X 1,5 D980 8 ZB	ECRO.M10X 1,5 D980 8 ZB	MUTT.M10X 1,5 D980 8 ZB	TUER.M10X 1,5 D980 8 ZB
28	G18902960	MOLLA TRAZ.TRASM.RUOTA ZN	TRANSMISSION TENSIONER SPRING	RESSORT TRACT. ENTRAIN. ROUE Z	ZUGFEDER RADANTRIEB ZN	MUELLE TRAC. TRANSM.RUEDA ZN
29	G15410122	PRIMO/SECONDO PUNTO	FIRST/SECOND POINT	PREMIER/DEUXIEME POINT	ERSTER/ZWEITER PUNKT	PRIMER/SEGUNDO PUNTO
30	G15211770	TERZO PUNTO RINF.150	THIRD POINT REINFORCEMENT 150	TROISIEME POINT RENFORCE	DRITTER PUNKT VERSTZRKT	TERCER PUNTO REF.
31	F20100078	PERNO D28 L93 C40 ZN	PIN D.28	GOUJON D.28	BOLZEN D.28	PERNO D.28
32	F01020236	VITE M14X 2X220 U5737 8.8 BR	SCREW M14X2X220 U5737 8.8 BR	VIS M14X2X220 U5737 8.8 BR	SCHRAUBE M14X2X220 U5737 8.8	TORNILLO M14X2X220 U5737 8.8
33	G22505032	TUBO TELAIO L=3200	FRAME PIPE L=3200	TUBE BATI L=3200	ROHR RAHMEN L=3200	TUBO BASTIDOR L=3200
34	G15210690	TUBO TELAIO FISSO 150X5000	FIXED FRAME PIPE 150X5000	TUBE BATI FIXE 150X5000	ROHR FIXER RAHMEN 150X5000	TUBO BASTIDOR FIJO 150X5000
35	G22505035	TUBO TELAIO L=5800	FRAME PIPE L=5800	TUBE BATI L=5800	ROHR RAHMEN L=5800	TUBO BASTIDOR L=5800
36	G15210740	TUBO TELAIO FISSO 150X6000	FIXED FRAME PIPE 150X6000	TUBE BATI FIXE 150X6000	ROHR FIXER RAHMEN 150X6000	TUBO BASTIDOR FIJO 150X6000
37	G16610050	TUBO R.150X100X2480	RECTANGULAR PIPE 150X100X6X248	TUBE RECT.150X100X6X2480	R. ROHR150X100X6X2480	TUBO RECT.150X100X6X2480
38	G16610080	TUBO R.150X100X 6X2750	RECTANGULAR PIPE 150X100X6X275	TUBE RECT.150X100X6X2750	R. ROHR150X100X6X2750	TUBO RECT.150X100X6X2750
39	G16610060	TUBO R.150X100X3500	RECTANGULAR PIPE 150X100X3500	TUBE RECT.150X100X3500	R. ROHR150X100X3500	TUBO RECT.150X100X3500
40	G16610070	TUBO R.150X100X4200	RECTANGULAR PIPE 150X100X4200	TUBE RECT.150X100X4200	R. ROHR150X100X4200	TUBO RECT.150X100X4200
41	G15211250	TUBO R.150X100X 6X2990	RECTANGULAR PIPE 150X100X6X299	TUBE RECT.150X100X6X2990	R. ROHR150X100X6X2990	TUBO RECT.150X100X6X2990
42	G16610461	ASS.TERZO PUNTO 2 CATEGORIA				
43	G20970120	RONDELLA 70X8X28,5	WASHER 70X8X28-5	RONDELLE 70X8X28-5	UNTERLEGSCHEIBE 70X8X28-5	ARANDELA 70X8X28-5
44	G16610110	TAPPO TELAIO 150X100 COMPL.	COMPL. FRAME PLUG 150X100 B319	BOUCHON CH-SSIS 150X100 COMPL.	PFROPFEN RAHMEN 150X100 KOMPL.	TAPËN BASTIDOR 150X100 COMPL.
45	G19003000	TAPPO PER TELAIO 150	CAP FOR FRAME 150	BOUCHON POUR BATI 150	PFROPFEN FOR RAHMEN 150	TAPON PARA BASTIDOR 150

TAV. 20

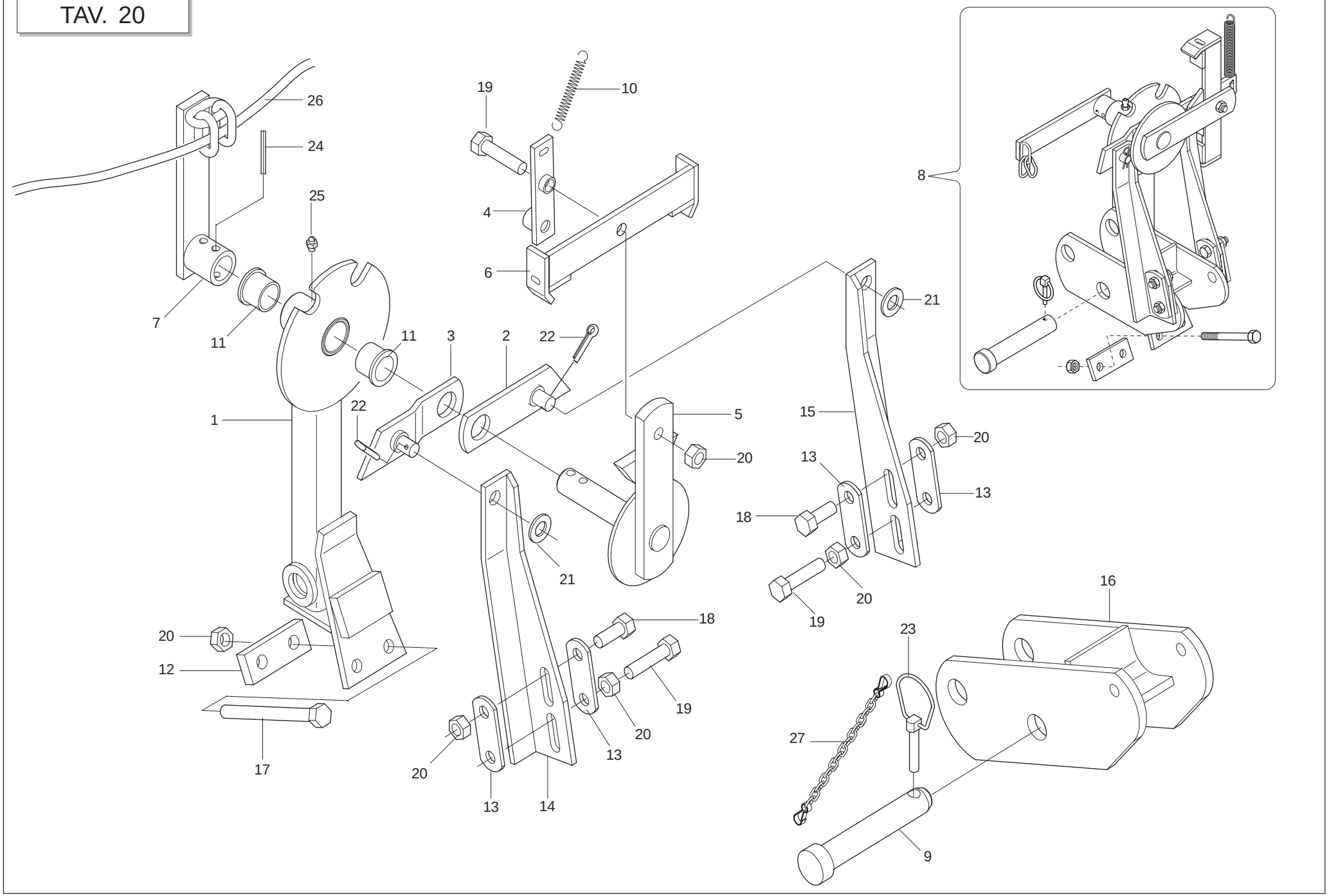

GASPARDO

cod. G19530197

COMANDO SEGNAFILE MECCANICO

TAV. 20

Pos.	Cod.	Descrizione	Description	Description	Benennung	Descripcion
1	G15410920	COMANDO SEGNAFILE	ROWMARKER CONTROL	COMMANDE TRACEUR	SPURREISSERSCHALTUNG	MANDO MARCADOR DE FILAS
2	G15410950	LEVA PIANA	FLAT LEVER	LEVIER PLAT	FLACHER HEBEL	PALANCA PLANA
3	G15410960	LEVA STAMPATA	PRESSED LEVER	LEVIER IMPRESSION	GEPRESSTER HEBEL	PALANCA MOLDEADA
4	G15410990	LEVA SCATTO SEGNAFILE	ROWMARKER SNAP LEVER	LEVIER DETENTE TRACEUR	SCHNAPPHEBEL REIHENANREISSER	PALANCA DISPARO MARCADOR DE FI
5	G15411110	SUPPORTO LEVA SCATTO	SNAP LEVER SUPPORT	SUPPORT LEVIER DETENTE	HALTERUNG SCHNAPPHEBEL	SOPORTE PALANCA DISPARADOR
6	G15411120	FERMO LEVE AGGANCIO	LEVERS HOOK UP STOP	ARRET LEVIER ACCORCHAGE	FESTSTELLVORRICHTUNG KUPPLUNGS	BLOQUEO PALANCA ENGANCHE
7	G15411130	FERMO CORDE SEGNAFILE SP	ROWMARKER ROPE STOP SP	ARRET CORDES TRACEUR SP	FESTSTELLVOR. SEILE REIHENANRE	BLOQUEO CUERDAS MARCADOR FILAS
8	G15411140	MONT.SCATTO AUTOMATICO SP	UPRIGHT- AUTOMATIC SNAP SP	MONTANT DETENTE AUTOMATIQUE SP	STZNDER AUTOMATISCHES EINRASTE	MONT.DISPARADOR AUTOMæTICO SP
9	F20100062	SPINA GASPARDO 25X128 ZN	FOR 3RD POINT	GOUJON 3EME POINT	BOLZEN 3. PUNKT	PERNO 3 PUNTO
10	G18902680	MOLLA TRAZ.ZN SERBATOIO SV290	GALV.TANK TRACT.SPRING SV290	RESSORT RAZ.ZN RESERVOIR SV290	ZUGFEDER ZN BEHZLTER SV290	MUELLE TRAC.ZN DEPSITO SV290 A
11	G21120067	BOCCOLA IN BRONZO	BRONZE BUSHING	BOITE EN BRONZE	BRONZEBsCHSE	CASQUILLO DE BRONCE
12	G22220124	SCONTRO	STRIKER PLATE	BUTEE	ANSCHLAG	ELEMENTO DE EMPALME
13	G22220132	SCONTRO BRACCI	STRIKER PLATE- ARMS	BUTEE BRAS	ARME ANSCHLAG	ELEMENTO DE EMPALME BRAZOS
14	G22270021	BRACCIO INF.SX COMANDO SEGNAF.	ARM-LOWER LEFT ROWMARK. CONTR.	BRAS INF. GCH. COMMANDE TRACEU	LINKER UNT. ARM SPURREISSERSTE	BRAZO INF.IZQ. MANDO MARC. FIL
15	G22270022	BRACCIO INF.DX COMANDO SEGNAF.	RIGHT LOWER ARM-ROWMARK.CONTR.	BRAS INF. DRT. COMMANDE TRACEU	RECHTER UNT. ARM SPURREISSERST	BRAZO INF.DER. MANDO MARC. FIL
16	G13810341	ATTACCO COMANDO 3°PUNTO	CONTROL COUPLING 3. POINT	FIXATION COMMANDE 3 POINT K	UPPLUNG STEUERUNG 3. PUNKT C	ONEXIN MANDO 3PUNTO OPR
17	F01020177	VITE M12X1,75X140 5737 8.8 ZN	BOLT M12X1,75X140 U5737 8.8 ZG	VIS M12X1,75X140 U5737 8.8 ZG	SCHRAUBE M12X1,75X140 U5737 8.	TORNIL. M12X1,75X140 U5737 8.8
18	F01020510	VITE M12X1,75X30 U5739 8.8 ZN	BOLT M 12X30	VIS M 12X30	SCHRAUBE M 12X30	TORNILLO M 12X30
19	F01020517	VITE M12X1,75X50 U5739 8.8 ZN	BOLT M12X1,75X50	VIS M12X1,75X50	SCHRAUBE M12X1,75X50	TORNILLO M12X1,75X50
20	F01200293	DADO M12X1,75 U5588 6.8 ZN	NUT M12	ECROU M12	MUTTER M12	DADO M12
21	F01410088	ROS.M14 15X 28X2,5 U6592 ZN	WAS.M14 15X 28X2,5 U6592 ZB	RON.M14 15X 28X2,5 U6592 ZB	SCH.M14 15X 28X2,5 U6592 ZB	ARA.M14 15X 28X2,5 U6592 ZB
22	F02200227	COPIGLIA 5X 30 U1336 ZN	SPLIT PIN 5 X30 1336 GALVAN.	GOUPILLE 5 X30 1336 ZN	SPLINT 5 X30 1336 ZN	PASADOR 5 X30 1336 ZN
23	F02200507	SPINA SCATTO D. 9 B/83 ZN	SNAP PIN D 9 B/83	FICHE A DETENTE D 9 B/83	EINRASTSTIFT D 9 B/83	CLAVIJA DE MUELLE D 9 B/83
24	F02100141	SPINA E.P. 8X 36 U6873 C70 BR	PIN EL. 8 X36 DIN 1481	FICHE EL. 8 X36 DIN 1481	SPANNSTIFT 8 X36 DIN 1481	CLAVIJA EL.8 X36 DIN 1481
25	F01100011	ING.M 6X1 7663-A 9SMNPB28 ZN	SPHERE NIPPLE M6X1/A	GRAISSEUR A BILLES M6X1/A	KUGELFETTBsCHSE M6X1/A	ENGRAS. DE ESFERAS M6X1/A
26	F05150399	CORDA POLIPROPILENE D.12	POLIPROPILENE 12 CABLE	CORDE POLIPROPILENE 12	SEIL POLIPROPILENE 12	CUERDA POLIPROPILENE 12
27	G13812311	CATENELLA CON MOSCHETTONE	CHAIN WITH SPRING CATCH	CHAINETTE AVEC MOUSQUETON	KETTE MIT KARABINERHAKEN	CADENA CON GANCHO

TAV. 35

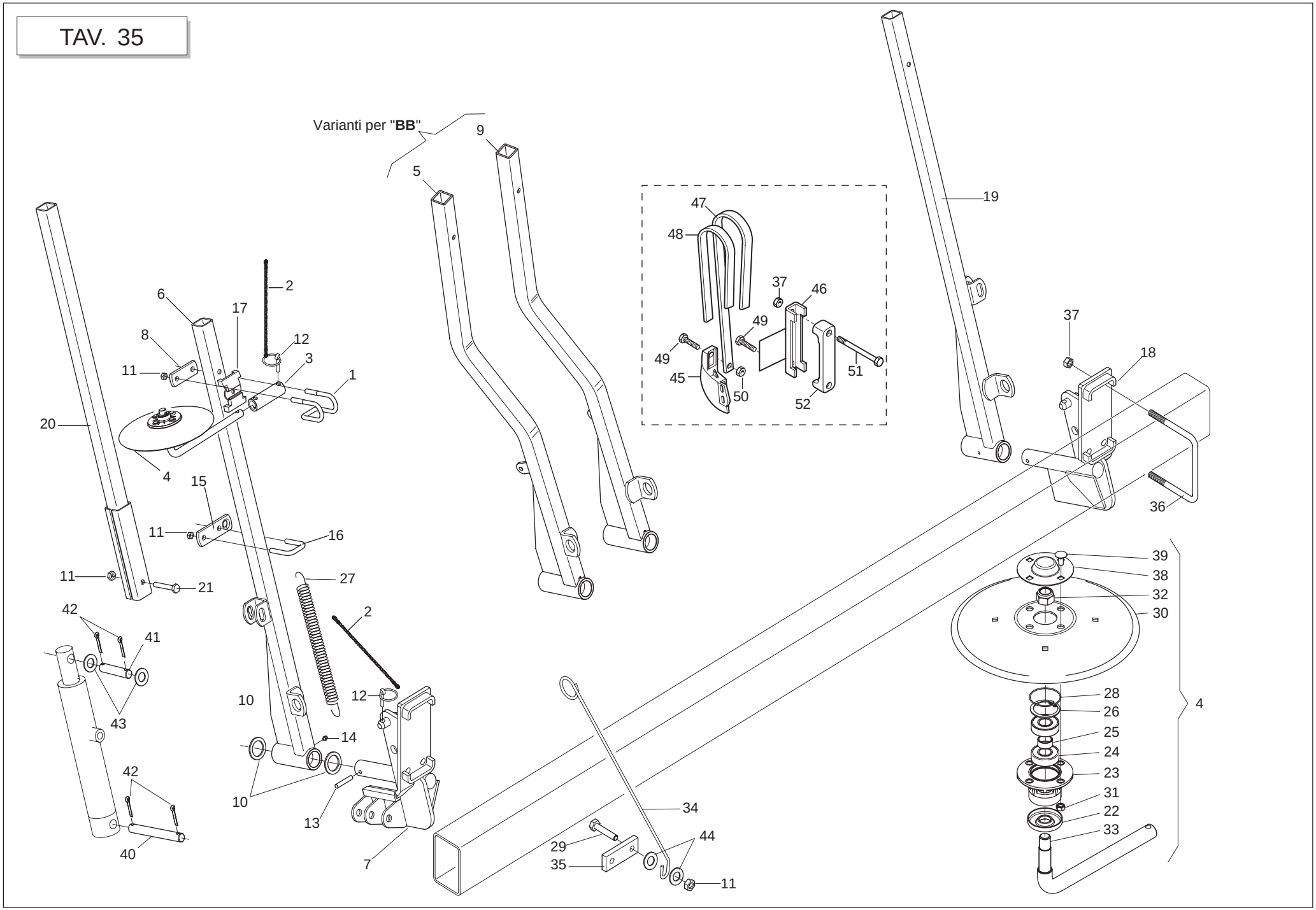

GASPARDO

cod. G19530197

SEGNAFILE OLEODINAMICO

TAV. 35

Pos.	Cod.	Descrizione	Description	Description	Benennung	Descripcion
1	G16610230	CAVALLOTTO MANICOTTO DISCO	DISK SLEEVE U BOLT	ETRIER MANCHON DISQUE	_BERBR_CKUNG MUFFE SCHEIBE	ABRAZADERA MANGUITO DE DISCO
2	G13812311	CATENELLA CON MOSCHETTONE	CHAIN WITH SPRING CATCH	CHAINETTE AVEC MOUSQUETON	KETTE MIT KARABINERHAKEN	CADENA CON GANCHO
3	G17111290	MANICOTTO DISCO	DISC COUPLING SLEEVE	MANCHON DISQUE	SCHEIBENMUFFE	MANGUITO DISCO
4	G16610200	DISCO D.320 COMPL	DISK D.320 COMPL	DISQUE D.320 COMPLET	SCHEIBE D.320 KOMP	DISCO D.320 COM
5	G15211911	BRACCIO SEGNAFILE SX				
6	G15412691	BRACCIO SEGNAFILE SX	LH FOLDING ARM	BRAS PLIANT GCH.	KLAPPBARER ARM LI.	BRAZO PLEGABLE IZQ.
7	G15412681	ASS.SUPP.SEGNAFILE SX				
8	G23440198	SCONTRO ATTACCO BRACCIO HL/2	STRIKER PLATE ARM ATTACH. HL/2	BUTEE FIXATION BRAS HL/2	ARMKUPPLUNGSANSCHLAG HL/2	ELEMENTO DE EMPALME CONEXIN BC
9	G15211931	BRACCIO SEGNAFILE DX				
10	G18701600	RONDELLA 35,5 X50 X3 ZN	WASHER 35.5 X 50 X 3- GALVANIZ	RONDELLE 35-5 X50 X3 ZN	UNTERLEGSCHEIBE 35-5 X50 X3	ARANDELA 35-5 X50 X3 ZN
11	F01200270	DADO M10X 1,5 U5588 6.8 ZN	NUT M10	ECROU M10	MUTTER M10	DADO M10
12	F02200507	SPINA SCATTO D. 9 B/83 ZN	SNAP PIN D 9 B/83	FICHE A DETENTE D 9 B/83	EINRASTSTIFT D 9 B/83	CLAVIJA DE MUELLE D 9 B/83
13	F02100146	SPINA E.P. 8X 55 U6873 C70 BR	PIN EL. .8 X55 DIN 1481	FICHE EL.8 X55 DIN 1481	SPANNSTIFT 8 X55 DIN 1481	CLAVIJA EL.8 X55 DIN 1481
14	F01100011	ING.M 6X1 7663-A 9SMNPB28 ZN	SPHERE NIPPLE M6X1/A	GRAISSEUR A BILLES M6X1/A	KUGELFETTBsCHSE M6X1/A	ENGRAS. DE ESFERAS M6X1/A
15	G15412810	ATTACCO FUNE SEGNAFILE	ROW MARKER ROPE LINKAGE	FIXATION CABLE TRACEUR	SEILKUPPLUNG SPURANZEIGER	CONEXIÓN CABLE MARCADOR DE FIL
16	F20110705	CAV.Q.M10X 1,5X 30 51X 62 ZN	U-BOLT GALVAN	CAVALIER ZN	BsGELBOLZEN ZN	PERNO EN U ZN
17	G19203740	ELEMENTO FISSAGGIO GAMBO ZN.	GALVAN. SHANK FASTENING ELEMEN	ELEMENT FIXATION TIGES ZN	BEFESTIGUNGSELEMENT SCHZCHTE Z	ELEMENTO SUJECIN VµSTAGOS ZN
18	G15412851	ASS.SUPP.SEGNAFILE DX				
19	G15412861	BRACCIO SEGNAFILE DX	RH FOLDING ARM	BRAS PLIANT DRT.	KLAPPBARER ARM RE.	BRAZO PLEGABLE DER.
20	G15412780	PROLUNGA BRACCIO SEGNAFILE	ROWMARKER EXTENSION	RALLONGE TRACEUR SOL.	VERLZNGERUNG SPURREISSER	PROLONG. MARC. DE FILAS
21	F01020122	VITE 10X 1,5X 70 U5737 8.8 ZN	BOLT 10X 1,5X 70 U5737 8.8 ZB	VIS 10X 1,5X 70 U5737 8.8 ZB	SCHR.10X 1,5X 70 U5737 8.8 ZB	TORN.10X 1,5X 70 U5737 8.8 ZB
22	G16610430	FONDELLO ZN.				
23	G16610160	SUPP.CUSCINETTI DISCO SEGN.ZN.	GALVAN. ROWMAKER DISK BEARING	SUPPORT ROULEMENTS DISQUE TRAC	SCHEIBENLAGERHALTERUNG	SOPORTE COJINETE DE DISCO MARC
24	F04010156	CUSC.d20 D47 B14 6204 2RSH				
25	G18801270	BOCCOLA 21 X25 X12 ZN	BUSHING 21 X 25 X 12 ZN	BOITE 21 X25 X12 ZN	BsCHSE 21 X25 X12 ZN	CASQUILLO 21 X25 X12 ZN
26	F02050370	ANELLO E. DI 47X1,75 U7437 C70	SEEGER RING 47X 1,75 U7437 C70	SEEGER E. 47X 1,75 U7437 C70	SEEGERING E. 47X1,75 U7437 C70	ANILLO E. 47X 1,75 U7437 C70
27	G65337004	MOLLA TRAZ.SOLLEV. FU	TRACTION SPRING LIFT. FU	RESSORT TRACT. LEVAGE FU	ZUGFEDER HEBUNG FU	MUELLE TRAC. LEVDEL. FU
28	F03010576	ANELLO OR 50,52X1,78 NBR	GASKET OR 033 DOWTY	BAGUE OR 033 DOWTY	RING OR 033 DOWTY	ANILLO OR 033 DOWTY
29	F01020476	VITE M10X 1,5X30 U5739 8.8 ZN	BOLT M 10X30	VIS M 10X30	SCHRAUBE M 10X30	TORNILLO M 10X30
30	G16610170	DISCO SEGNAFILE D.320	ROW MARKER DISK D.320	DISQUE TRACEUR D320	SPURREISSERSCHEIBE D. 320	DISCO MARCARDOR DE FILAS O 320
31	F01200244	DADO M 8X1,25 U5588 6.8 ZN	NUT M8	ECROU M8	MUTTER M8	DADO M8
32	F01230098	DADO M18X 2,5 D982 8 ZN	NUT M18X 2,5 D982 8 ZB	ECRO.M18X 2,5 D982 8 ZB	MUTT.M18X 2,5 D982 8 ZB	TUER.M18X 2,5 D982 8 ZB
33	G16610180	PERNO REGGIDISCO SEGNAF.	ROWMAKER DISC-HOLDER PIN	PIVOT PORTE-DISQUE TRACEUR	SCHEIBENTRAGBOLZEN	PERNO SOPORTE DISCO MARCAFILA
34	G65336135	MOLLA GUIDACORDA D.45	ROPE GUIDE SPRING D.45	RESSORT GUIDE-CORDE D. 45	FEDER SEILFsHRUNG D.45	MUELLE GUA CUERDA D.45 A
35	G15470810	SUPPORTO GUIDACORDA SP	ROPE GUIDE SUPPORT SP	SUPPORT GUIDE-CORDE SP	HALTERUNG SEILFsHRUNG SP	SOPORTE GUIACUERDA SP
36	F20110780	CAV.Q.M14X 2X 50 165X129 ZN	U-BOLT M14X165-128	CAVALIER M14X165-128	VERBINDUNG M14X165-128	PERNO EN U M14X165-128
37	F01200306	DADO M14X 2 U5588 6.8 ZN	NUT M14X2	ECROU M14X2	MUTTER M14X2	DADO M14X2
38	G16610190	CHIUSURA CUSCINETTO ZN	GALVAN. BEARING CLOSURE	FERMETURE ROULEMENT ZN	LAGERVERSCHLUSS ZN	CIERRE COJINETE ZN
39	F01060040	BUL.M 8X1,25X 20 U5732 4.6 ZG	BOLT 8 X20 5732 4.6 GALVANIZED	VIS 8 X20 5732 4.6 ZN	SCHRAUBE 8 X20 5732 4.6 ZN	TORNILLO 8 X20 5732 4.6 ZN
40	G15413020	SPINA 15X120 ZN	GALVANIZED PIN 15X120	GOUPILLE 15X120 ZN	STIFT 15X120 ZN	CLAVIJA 15X120 ZN
41	G15413010	SPINA 15X62 ZN	PIN 15X62 ZN	GOUPILLE 15X62 ZN	BOLZENSTIFT 15X62 ZN	PASADOR 15X62 ZN
42	F02200194	COPIGLIA 4X 25 U1336 ZN	SPLIT PIN 4 X25 1336 GALVAN.	GOUPILLE 4 X25 1336 ZN	SPLINT 4 X25 1336 ZN	PASADOR 4 X25 1336 ZN
43	G18700690	RONDELLA 15 X40 X6 ZN	WASHER 15 X 40 X 6 ZN	RONDELLE 15 X40 X6 ZN	UNTERLEGSCHEIBE 15 X40 X6 ZN	ARANDELA 15 X40 X6 ZN
44	G20970111	RONDELLA 29,8X2X16,5	WASHER 29,8X2X16,5	RONDELLE 29,8X2X16,5	UNTERLEGSCHEIBE 29,8X2X16,5	ARANDELA 29,8X2X16,5
45	G13811261	FALCIONE SEGNAFILE INT.	INNER ROWM. CUTTER	HACHOIR TRACEUR INT.	SZSCHAR SPURREISSER INNEN	GUADA¥ADORA MARCADOR DE HILE
46	G15470232	SUPPORTO MOLLA PIATTA 150	FLAT SPRING SUPPORT 150	SUPPORT RESSORT PLAT 150	HALTERUNG FLACHFEDER 150	SOPORTE MUELLE PLANO 150
47	G18901092	GAMBO CONCIMAZ.MOLLA PIATTA SP	FLAT SPRING MANURING LEG SP	TIGE FUMAGE RESSORT PLAT SP	SCHAFT DsNGUNG FLACHE FEDER SP	VæSTAGO ABONO MUELLE CHATO SP
48	G18902861	RINF.MOLLA PIATTA CONCIM.SP	MANUR.PLATE SPRING REINFORCE.S	RENF. RESSORT PLAT FUMAGE SP	VERSTZRKUNG FLACHFEDER DsNGUNG	REFUERZO MUELLE ABONO SP
49	F01020512	VITE M12X1,75X35 U5739 8.8 ZN	SCREW M 12X35	VIS M 12X35	SCHRAUBE M 12X35	TORNILLO M 12X35
50	F01200293	DADO M12X1,75 U5588 6.8 ZN	NUT M12	ECROU M12	MUTTER M12	DADO M12
51	F01020236	VITE M14X 2X220 U5737 8.8 BR	SCREW M14X2X220 U5737 8.8 BR	VIS M14X2X220 U5737 8.8 BR	SCHRAUBE M14X2X220 U5737 8.8	TORNILLO M14X2X220 U5737 8.8
52	G19204030	SCONTRO FISS.150 2F D15				

TAV. 293

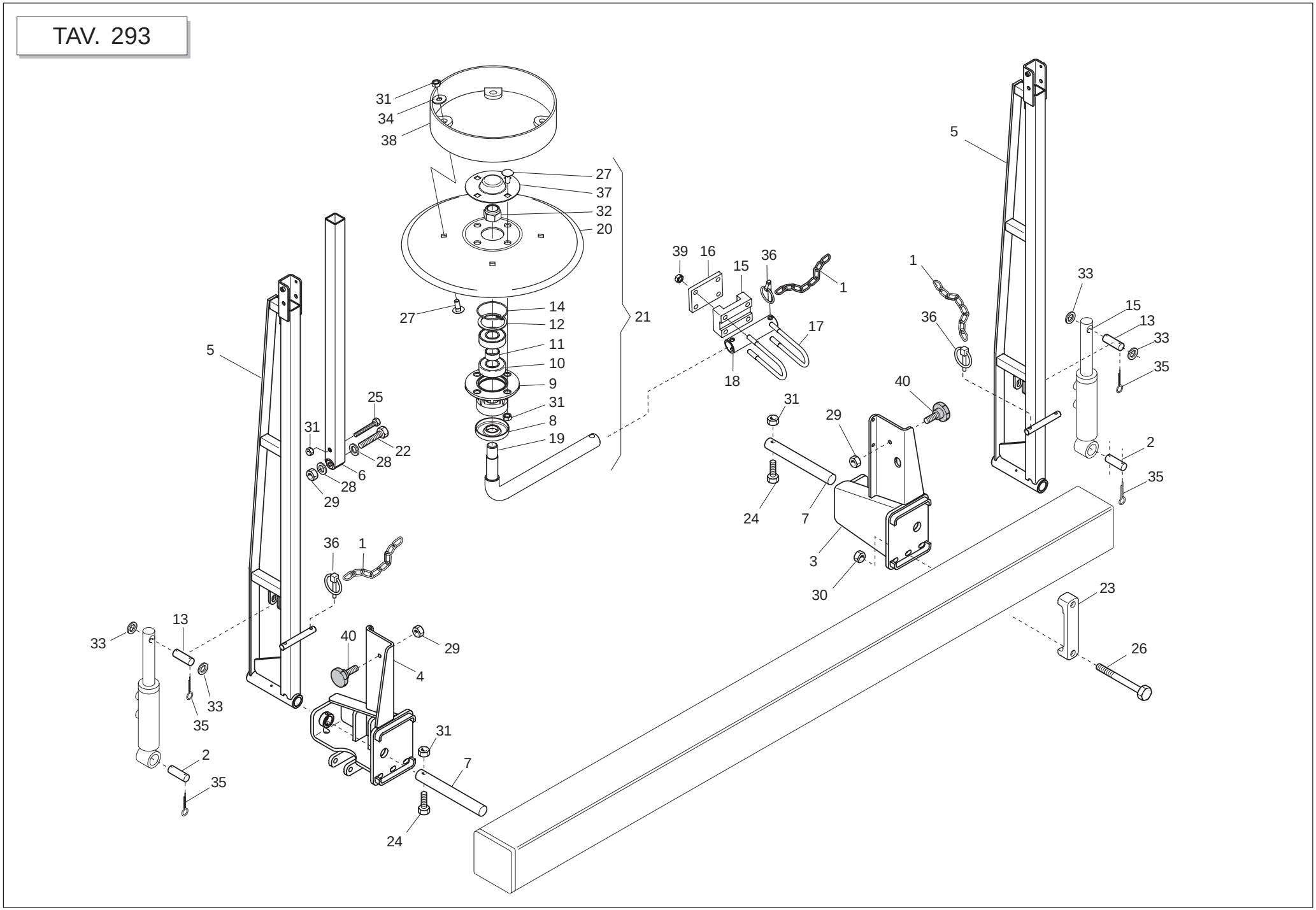

GASPARDO

SEGNAFILE RINFORZATO

TAV. 293

Pos.	Cod.	Descrizione	Description	Description	Benennung	Descripcion
1	G13812311	CATENELLA CON MOSCHETTONE	CHAIN WITH SPRING CATCH	CHAINETTE AVEC MOUSQUETON	KETTE MIT KARABINERHAKEN	CADENA CON GANCHO
2	G15413020	SPINA 15X120 ZN	GALVANIZED PIN 15X120	GOUPILLE 15X120 ZN	STIFT 15X120 ZN	CLAVIJA 15X120 ZN
3	G15411381	SUPPORTO BRACCIO DX	RIGHT ARM SUPPORT	RACLEUR GCH BAGUE	HALTERUNG ARM RE	SOPORTE BRAZO DER
4	G15411391	SUPPORTO BRACCIO SX	LEFT ARM SUPPORT	SUPPORT BRAS GCH	HALTERUNG ARM LI	SOPORTE BRAZO IZQ
5	G15411471	BRACCIO SEGNAFILE FRANCIA	FRENCH ROWMARKER ARM	BRAS TRACEUR	SPURREISSERARM	BRAZO MARCADOR DE FILAS
6	G16072220	BRACCIO SEGNAFILE	ROW MARKER BEAM	BRAS TRACEUR	REIHENANREISSARM	BRAZO MARCADOR DE FILAS
7	G14215830	ASSE SEGNAFILE ZN	GALVAN. ROWMAKER AXLE	AXE BRAS TRACEUR ZN	REISSERASCHE	EJE MARCADOR DE FILAS
8	G16610430	FONDELLO ZN.				
9	G16610160	SUPP.CUSCINETTI DISCO SEGN.ZN.	GALVAN. ROWMAKER DISK BEARING	SUPPORT ROULEMENTS DISQUE TRAC	SCHEIBENLAGERHALTERUNG	SOPORTE COJINETE DE DISCO MARC
10	F04010156	CUSC.d20 D47 B14 6204 2RSH				
11	G18801270	BOCCOLA 21 X25 X12 ZN	BUSHING 21 X 25 X 12 ZN	BOITE 21 X25 X12 ZN	BsCHSE 21 X25 X12 ZN	CASQUILLO 21 X25 X12 ZN
12	F02050370	ANELLO E. DI 47X1,75 U7437 C70	SEEGER RING 47X 1,75 U7437 C70	SEEGER E. 47X 1,75 U7437 C70	SEEGERING E. 47X1,75 U7437 C70	ANILLO E. 47X 1,75 U7437 C70
13	G15413010	SPINA 15X62 ZN	PIN 15X62 ZN	GOUPILLE 15X62 ZN	BOLZENSTIFT 15X62 ZN	PASADOR 15X62 ZN
14	F03010576	ANELLO OR 50,52X1,78 NBR	GASKET OR 033 DOWTY	BAGUE OR 033 DOWTY	RING OR 033 DOWTY	ANILLO OR 033 DOWTY
15	G16912470	SCONTRO FISS.MANICOTTO TQ.50	STRIKER PLATE SLEEVE	BUTEE MANCHON	ANSCHLAG MUFFE	ELEMENTO DE EMPALME MANGUITO
16	G17111330	SCONTRO 90X70 -10 4F11 66X46	STOP TEETH 90X70 -10 4F11 66X4	BUT+E 90X70 -10 4TROUS 11 66X4	ANSCHLAG 90X70 -10 4F11 66X46	DIENTE DE PARADA 90X70 -10 4F1
17	F20110860	CAV.T.M10X 1,5X 30 46X128,5ZN	U BOLT M10X46 ZN	CAVALIER M10X46 ZN	VERBINDUNG M10X46 ZN	PERNO EN U M10X46 ZN
18	G17111290	MANICOTTO DISCO	DISC COUPLING SLEEVE	MANCHON DISQUE	SCHEIBENMUFFE	MANGUITO DISCO
19	G16610180	PERNO REGGIDISCO SEGNAF.	ROWMAKER DISC-HOLDER PIN	PIVOT PORTE-DISQUE TRACEUR	SCHEIBENTRAGBOLZEN	PERNO SOPORTE DISCO MARCAFILA
20	G16610170	DISCO SEGNAFILE D.320	ROW MARKER DISK D.320	DISQUE TRACEUR D320	SPURREISSERSCHEIBE D. 320	DISCO MARCARDOR DE FILAS O 320
21	G16610222	MONT.DISCO D.320 LIM.				
22	F01020168	VITE M12X1,75X90 U5737 8.8 ZN	BOLT 12X90 5737 8.G GALVANIZED	VIS 12X90 5737 8.G ZN	SCHRAUBE 12X90 5737 8.G ZN	TORNILLO 12X90 5737 8.G ZN
23	G19204030	SCONTRO FISS.150 2F D15				
24	F01020077	VITE M 8X1,25X60 U5737 8.8 ZN	BOLT M 8X60	VIS M 8X60	SCHRAUBE M 8X60	TORNILLO M 8X60
25	F01020088	VITE M 8X1,25X90 U5737 8.8 ZN	BOLT 8 X90 5737 8.G GALVANIZED	VIS 8 X90 5737 8.G ZN	SCHRAUBE 8 X90 5737 8.G ZN	TORNILLO 8 X90 5737 8.G ZN
26	F01020236	VITE M14X 2X220 U5737 8.8 BR	SCREW M14X2X220 U5737 8.8 BR	VIS M14X2X220 U5737 8.8 BR	SCHRAUBE M14X2X220 U5737 8.8	TORNILLO M14X2X220 U5737 8.8
27	F01060040	BUL.M 8X1,25X 20 U5732 4.6 ZG	BOLT 8 X20 5732 4.6 GALVANIZED	VIS 8 X20 5732 4.6 ZN	SCHRAUBE 8 X20 5732 4.6 ZN	TORNILLO 8 X20 5732 4.6 ZN
28	F01410076	ROS.M12 13X 24X2,5 U6592 ZN	PLANE WASHER D12 UNI 6592 ZN	RONDELLE D12 UNI 6592 ZN	SCHEIBE D12 UNI 6592 ZN	ARANDELA D12 UNI 6592 ZN
29	F01200293	DADO M12X1,75 U5588 6.8 ZN	NUT M12	ECROU M12	MUTTER M12	DADO M12
30	F01200306	DADO M14X 2 U5588 6.8 ZN	NUT M14X2	ECROU M14X2	MUTTER M14X2	DADO M14X2
31	F01200244	DADO M 8X1,25 U5588 6.8 ZN	NUT M8	ECROU M8	MUTTER M8	DADO M8
32	F01230098	DADO M18X 2,5 D982 8 ZN	NUT M18X 2,5 D982 8 ZB	ECRO.M18X 2,5 D982 8 ZB	MUTT.M18X 2,5 D982 8 ZB	TUER.M18X 2,5 D982 8 ZB
33	F01410088	ROS.M14 15X 28X2,5 U6592 ZN	WAS.M14 15X 28X2,5 U6592 ZB	RON.M14 15X 28X2,5 U6592 ZB	SCH.M14 15X 28X2,5 U6592 ZB	ARA.M14 15X 28X2,5 U6592 ZB
34	F01420048	ROS.M8 8,4X 24X 2 U6593 ZN	PLANE WASHER D.8	RONDELLE D.8	SCHEIBE D.8	ARANDELA D.8
35	F02200227	COPIGLIA 5X 30 U1336 ZN	SPLIT PIN 5 X30 1336 GALVAN.	GOUPILLE 5 X30 1336 ZN	SPLINT 5 X30 1336 ZN	PASADOR 5 X30 1336 ZN
36	F02200507	SPINA SCATTO D. 9 B/83 ZN	SNAP PIN D 9 B/83	FICHE A DETENTE D 9 B/83	EINRASTSTIFT D 9 B/83	CLAVIJA DE MUELLE D 9 B/83
37	G16610190	CHIUSURA CUSCINETTO ZN	GALVAN. BEARING CLOSURE	FERMETURE ROULEMENT ZN	LAGERVERSCHLUSS ZN	CIERRE COJINETE ZN
38	G16610210	ASS.LIMITATORE PROFONDITA'	LIMITER DEPTH COUPLYNG	GR. ASS. LIMITEUR DE PROFONDEU	TIEFENBEGRENZERKOMPLEX	CONJ. LIMITADOR DE PROFUNDIDAD
39	F01200270	DADO M10X 1,5 U5588 6.8 ZN	NUT M10	ECROU M10	MUTTER M10	DADO M10
40	F05150459	PARACOLPI CIL.75X25 M12 SH70	RUBBER BUFFER- CYLINDR. 75X25	PARE-CHOCS CYL. 75X25 M12 7811	PUFFER ZYL.75X25 M12 781103	PARAGOLPES CIL.75X25 M12 78110

TAV. 43

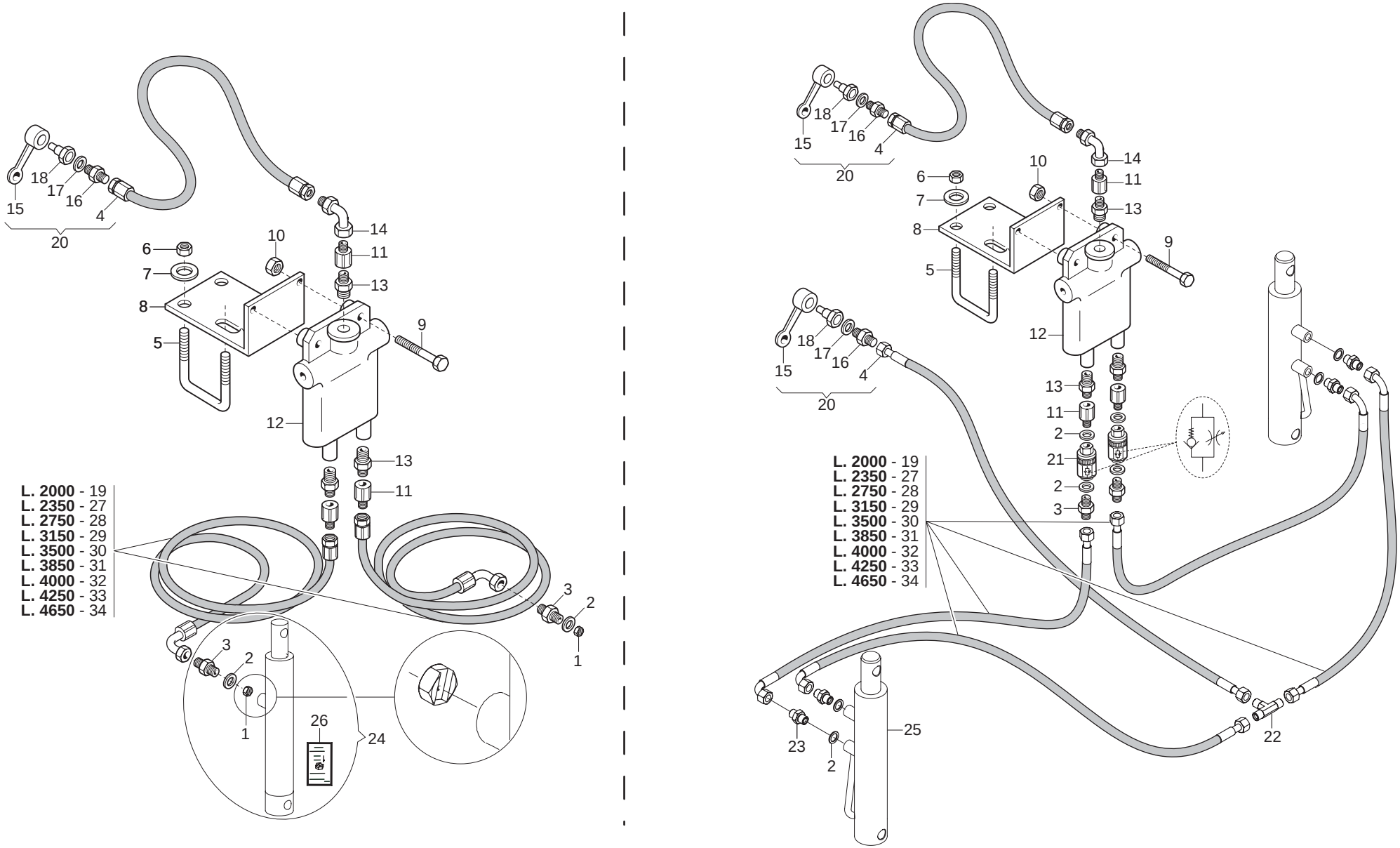

GASPARDO

IMPIANTO OLEODINAMICO SEGNAFILE

TAV. 43

Pos.	Cod.	Descrizione	Description	Description	Benennung	Descripcion
1	G15413050	STROZZATORE A PASTIGLIA D.0,8	PAD VENTURI D.0,8	ETRANGLEUR D.0,8	DROSSEL D.0,8	ESTRANGULADOR D.0,8
2	F03151238	RONDELLA RAME 13X19X1,5 -1/4"	1/4 COPPER WASHER	RONDELLE CUIVRE 1/4	UNTERLEGSCHEIBE KUPFER 1/4	ARANDELA COBRE 1/4
3	F03150266	NIPPLO MM CIL-CIL 1/4-1/4 ZN	NIPPLE GALV.CYL.MALE 1/4 ZN	NIPPLE MALE CYL. 1/4 ZN	NIPPELZYL.1/4 ZN	NIPLE MACHO CIL.1/4 ZN
4	G22270463	TUB.TR.1/4R2 F-F 1/4 L1500 LM	TUBE TR.1/4R2 F-F1/4 L1500 LM	TUB.TR.1/4R2 F-F 1/4 L1500 LM	ROHR1/4R2 F-F 1/4 L1500 LM	TUB.TR.1/4R2 F-F 1/4 L1500 LM
5	F20110770	CAV.Q.M14X 2X 50 96X119 ZN	U-BOLT M14X96 - 119 ZN	CAVALIER M14X96 - 119 ZN	VERBINDUNG M14X96 - 119 ZN	PERNO EN U M14X96 - 119 ZN
6	F01200306	DADO M14X 2 U5588 6.8 ZN	NUT M14X2	ECROU M14X2	MUTTER M14X2	DADO M14X2
7	G18700690	RONDELLA 15 X40 X6 ZN	WASHER 15 X 40 X 6 ZN	RONDELLE 15 X40 X6 ZN	UNTERLEGSCHEIBE 15 X40 X6 ZN	ARANDELA 15 X40 X6 ZN
8	G15412351	SUPPORTO VALVOLA				
9	F01020068	VITE M 8X1,25X40 U5737 8.8 ZN				
10	F01200244	DADO M 8X1,25 U5588 6.8 ZN	NUT M8	ECROU M8	MUTTER M8	DADO M8
11	F03151194	PROLUNGA CORTA 036 1/4	SHORT EXTENSION 036 1/4	RALLONGE COURTE 036 1/4	KURZE VERLZNGERUNG 036 1/4	PROLONG. CORTA 036 1/4
12	F03150577	VALVOLA SEGNAF.CROSS SQV	ROW MARKER VALVE ATI C128513	SOUPAPE TRACEUR C.SQV	VENTIL SPURREISSER ATI C128513	VæLVULA MARCAFILAS ATI C128513
13	F03150122	NIPPLO MM 3/4 JIC OR 1/4 OR ZG	NIPPLE- 3/4 JIC OR - 1/4	NIPPLE 3/4 JIC OR - 1/4	NIPPEL 3/4 JIC OR - 1/4	NIPLE 3/4 JIC OR - 1/4
14	F03150859	CURVA 90°F.GIREV.1/4 - M.1/4	ELBOW 90[F. SWIVEL 1/4 -M.1/4	COUDE 90[F.TOURN.1/4 - M.1/4	KNIESTsCK 90[F.DREHB.1/4 - M.	CURVA 90 F.GIRAT..1/4 - M.1/4C
15	F05150325	CAPPUCCIO PROT.INNESTO RAP.1/2	COVER 1/2	COUVERCLE 1/2	DECKEL 1/2	TAPA 1/2
16	F03150211	NIPPLO MM CIL-CIL 1/2-1/4 ZN	NIPLE 1/4-1/2	NIPLE 1/4-1/2	NIPLE 1/4-1/2	NIPLE 1/4-1/2
17	F03151237	RONDELLA RAME 21X27X1,5 -1/2"	1/2 COPPER WASHER	RONDELLE CUIVRE 1/2	UNTERLEGSCHEIBE KUPFER 1/2	ARANDELA COBRE 1/2
18	F03150935	INNESTO RAP.MASCH.1/2 A VALV.	QUICK CONNECT MALE CONE 1/2 CO	CONNEXION RAPIDE MALE CONE 1/2	SCHNELLKUPPLUNG GEWINDE KONISC	ACOPLAMIENTO RAPIDO MACHO CONO
19	G23440517	TUBO 1/4R2 C-F 1/4 L2000 HL/ID	PIPE 1/4R2 C-F 1/4 L2000 HL/ID	TUBE 1/4R2 C-F 1/4 L2000 HL/ID	ROHR 1/4R2 C-F 1/4 L2000 HL/ID	TUBO 1/4R2 C-F 1/4 L2000 HL/ID
20	G13811211	TUBO X COLLEG. AL TRATTORE	PIPE FOR CONNECTION TO TRACTOR	TUBE POUR CONN. AU TRACTEUR	ROHR F. KUPPLUNG AM SCHLEPPER	TUBO P/CONEXIN AL TRACTOR T
21	F03151226	REGOL.DI FLUSSO VRF 1/4' GAS	1/4' GAS VALVE VRF	SOUPAPE REG DEBIT VRF 1/4" GAZ	VENITL VRF 1/4' GAS	VæLVULA VRF 1/4' GAS
22	F03151219	RACCORDO -T- MASCHIO 1/4 ZN	MALE T-UNION 1/4 ZINC.	RACCORD -T- MALE 1/4 ZING.	ANSCHLUSSTsCK -T- GEWINDE 1/4	UNIN -T- MACHO 1/4 CINC. R
23	G16011690	MONT.NIPPLO 1/4 GRANO F.1,0	UPRIGHT 1/4" NIPPLE WITH GRUB	MONTANT NIPPLE 1/4 AVEC GRAIN	STZNDER NIPPEL 1/4 MIT STIFT 8	MONT.NIPLE 1/4 TORNIL.SIN CABE
24	G15413110	CILINDRO SEGNAFILE SP COMPL.	ROW MARKER CYLINDER SP	CYLINDRE TRACEUR SP	SYLINDER REIHENANREISSER SP	CILINDRO MARCADOR DE FILAS
25	G16610140	CILINDRO DE 30X40 -155	CYLINDER D.E.30-40/155	CYLINDRE D.E. 30-40/155	ZYLINDER D.E.30-40/155	CILINDRO D.E. 30-40/155
26	G19702710	DECAL.POSIZIONE STROZZATORE	VENTURI POSITION STICKER	DECALCOM POSITION TAQUET	ABZIEHBILD POSIZION DROSSELSTE	CALCOMAN-A. POSICIËN ESTRANGUL
27	G22505140	TUBO 1/4R2 C-F 1/4 L.2350 LM	PIPE 1/4R1 C-F 1/4 L.2350 LM	TUBE 1/4R1 C-F 1/4 L. 2350 LM	ROHR 1/4R1 C-F 1/4 L.2350 LM	TUBO 1/4R1 C-F 1/4 L.2350 LM
28	G22505141	TUBO 1/4R2 C-F L.2750 LM	PIPE 1/4R1 C-F L.2750 LM	TUBE 1/4R1 C-F L. 2750 LM	ROHR 1/4R1 C-F L.2750 LM	TUBO 1/4R1 C-F L.2750 LM
29	G15210950	TUBO 1/4 R2 C-F 1/4 L.3150	PIPE 1/4-R2 C-F 1/4 M.3150	TUBE 1/4-R2 C-F 1/4 M.3150	ROHR 1/4-R2 C-F 1/4 M.3150	TUBO 1/4-R2 C-F 1/4 M.3150
30	G15210561	TUBO 1/4R2 CF1/4- F1/4 3500				
31	G15413060	TUBO 1/4R2 CF1/4- F1/4 3850	TUBE 1/4R2 CF1/4-F1/4 3850	TUYAU 1/4R2 CF1/4-F1/4 3850	SCHLAUCH 1/4R2 CF1/4-F1/4 3850	TUBO 1/4R2 CF1/4-F1/4 3850
32	G16012650	TUBO R2 1/4 C-F L.4000	PIPE 1/4 R2 C-F 1/4 L.4000	TUBE 1/4 R2 C-F 1/4 L. 4000	ROHR 1/4 R2 C-F 1/4 L 4000	TUBO 1/4 R2 C-F 1/4 L.4000
33	G15413070	TUBO 1/4R2 CF1/4- F1/4 4250	TUBE 1/4R2 CF1/4-F1/4 4250	TUYAU 1/4R2 CF1/4-F1/4 4250	SCHLAUCH 1/4R2 CF1/4-F1/4 4250	TUBO 1/4R2 CF1/4-F1/4 4250
34	G15413080	TUBO 1/4 C-F L.4650	TUBE 1/4 C-F L.4650	TUBE 1/4 C-F L.4650	ROHR 1/4 C-F L.4650	TUBO 1/4 C-F L.4650

TAV. 53

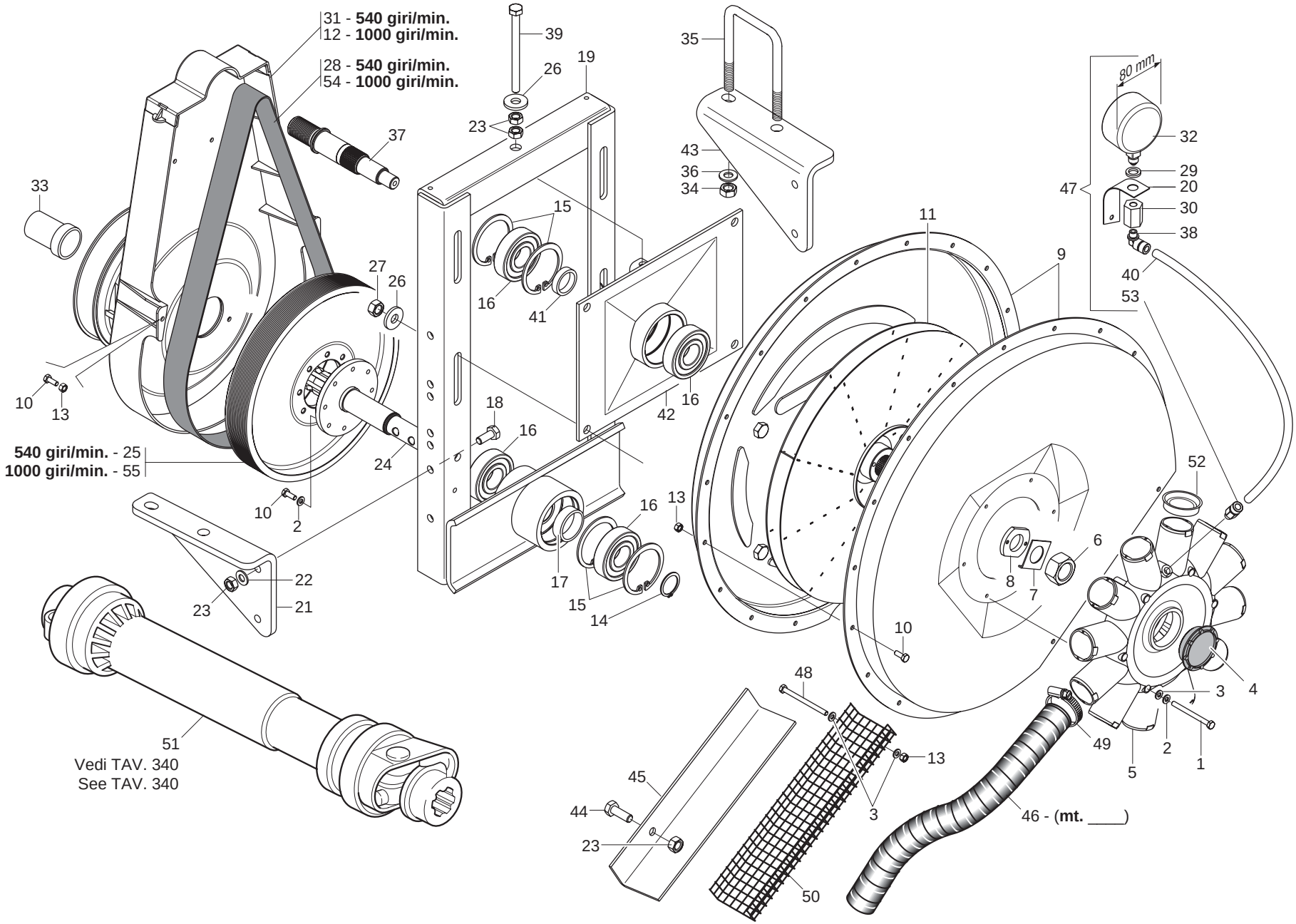

GASPARDO

DEPRESSORE

TAV. 53

Pos.	Cod.	Descrizione	Description	Description	Benennung	Descripcion
1	F01020047	VITE M 6X 1X 70 U5737 8.8 ZN	BOLT 6 X70 5737 8.G GALVANIZED	VIS 6 X70 5737 8.G ZN	SCHRAUBE 6 X70 5737 8.G ZN	TORNILLO 6 X70 5737 8.G ZN
2	F01430047	ROS.M6 6,4X 11X0,7 U8842J ZN	WASHER D6 DIN 6798 D.INT.GALV.	RONDELLE D6 DIN 6798 D. INT. Z	UNT. SCHEIBE D6 DIN 6798 D. IN	ARANDELA D6 DIN 6798 D.INT.ZN
3	F01420036	ROS.M6 6,4X 18X 2 U6593 ZN	FLAT WASHER 6-6X 18X2 6593 ZN	ROND. PLATE 6-6X 18X2 6593 ZN	SCHEIBE 6-6X 18X2 6593 ZN	ARAND. PLANA 6-6X 18X2 6593 ZN
4	F03150722	TAPPO 700 M52X2	M52 X 2 PLUG	BOUCHON M52 X 2	PFROPFEN M52 X 2	TAPN M52 X 2 D
5	G19004480	CONVOGLIATORE 12 USCITE	CONVEYOR 12 OUTLETS	CONVOYEUR 12 SORTIES	TRICHTER MIT 12 AUSG-NGEN	TRANSPORTADOR 12 SALIDAS
6	F01230143	DADO M24X 2 D982 8 ZN	NORMAL SELF-LOCK.NUT 24X2 GAL	ECROU AUTOB. NOR. 24X2 ZN	MUTTER AUTOB.NOR.24X2 ZN	TUERCA AUTOB. NOR.24X2 ZN
7	G13912060	PIASTRINA DI TENUTA	STOP PLATE	PLAQUETTE DE TENUE	DICHTPLZTTCHEN	PLACA DE RETENCIN P
8	G13912050	RONDELLA DI FERMO	STOP WASHER	RONDELLE DE BLOCAGE	FESTSTELLSCHEIBE	ARANDELLA DE BLOQUEO
9	G22230335	INVOLUCRI DEPRESSORE	VACUUM PUMP CASINGS	ENVELOPPES DEPRESSEUR H	sLLEN VAKUUMPUMPE C	AJAS BOMBA VACO CA
10	F01020403	VITE M 6X 1X 16 U5739 8.8 ZN	BOLT M 6X16	VIS M 6X16	SCHRAUBE M 6X16	TORNILLO M 6X16
11	G22230015	GIRANTE	IMPELLER	ROUE TURBINE	LAUFRAD	RODETE
12	G15450500	PROTEZIONE CINGHIA 1000 GIRI	BELT GUARD 1000 RPM	PROTECTION COURROIE 1000 TOURS	RIEMENSCHUTZ 1000 UMDR.	PROTECCIN CORREA 1000 REV. P
13	F01220011	DADO M 6X 1 D980 8 ZN	SELF LOCKING NUT M6	ECROU AUTOBL. M6	SELBSTSPERR.MUTTER M6	DADO AUTOBL. M6
14	F02050112	ANELLO E. DE 30X 1,5 U7435 C70	SEEGER RING 30X 1,5 U7435 C70	SEEGER E. 30 X 1,5 U7435 C70	SEEGERING E. 30X 1,5 U7435 C70	ANILLO E. 30 X 1,5 U7435 C70
15	F02050403	ANELLO E. DI 72X 2,5 U7437 C70	SEEGER RING E.72X2,5 U7437 C70	SEEGER E. 72X 2,5 U7437 C70	SEEGERING E. 72X 2,5 U7437 C70	ANILLO E. 72X 2,5 U7437 C70
16	F04010215	CUSC.D30 D72 B19 6306 2RSC3 EX	BEARING 6306 2RS C3	PALIER 6306 2RS C3	LAGER 6306 2RS C3	COJINETE 6306 2RS C3
17	G22230010	DISTANZIALE CUSCINETTI	BEARING SPACER	ENTRETOISE PALIERS	DISTANZSTsCK LAGER	DISTANCIADOR COJINETES
18	F01020476	VITE M10X 1,5X30 U5739 8.8 ZN	BOLT M 10X30	VIS M 10X30	SCHRAUBE M 10X30	TORNILLO M 10X30
19	G15850200	INCASTELLATURA DEPRESSORE	DIFFUSION AIR PUMP FRAME	B-TI POMPE A D+PRESSION	GESTELL VAKUUMPUMPE	ARMAZËN BOMBA VAC-O
20	G22270134	SUPPORTO VACUOMETRO SP	VACUUM METER SUPPORT SP	SUPPORT VACUOMETRE SP	HALTERUNG VAKUUMMETER SP	SOPORTE VACUMETRO SP S
21	G15450060	SUPPORTO SX	LEFT SUPPORT	SUPPORT GCH	HALTERUNG LI	SOPORTE IZQ
22	F01430023	ROS.M10 10,5X 18X0,9 U8842J ZN	WASHER D10 DIN 6798 D.INT.ZN	RONDELLE D10 DIN 6798 D. INT.	UNT. SCHEIBE D10 DIN 6798 D.IN	ARANDELA D10 DIN 6798 D.INT.ZN
23	F01200270	DADO M10X 1,5 U5588 6.8 ZN	NUT M10	ECROU M10	MUTTER M10	DADO M10
24	G22270369	P.DI P.CON CODOLO	POWER TAKE-OFF- W/ SPIGOT	PRISE DE FORCE AVEC CONE	KRAFTABTRIEB MIT ENDSTsCK	TOMA DE FUERZA CON MANGO
25	G22230012	PULEGGIA MOTRICE	DRIVING PULLEY	POULIE MOTRICE 540T	ANTRIEBSSCHEIBE	POLEA MOTRIZ
26	G20970035	RONDELLA 32X4X13	WASHER 32X4X13	RONDELLE 32X4X13	UNTERLEGSCHEIBE 32X4X13	ARANDELA 32X4X13
27	F01200293	DADO M12X1,75 U5588 6.8 ZN	NUT M12	ECROU M12	MUTTER M12	DADO M12
28	F06010160	CINGHIA POLY V 1287 J-16 GOLE	BELT- POLY V 1287 J-16 GOLE	COURROIE POLY V 1287 J-16 CANN	RIEMEN POLY V 1287 J-16 RILLEN	CORREA POLY V 1287 J-16 GARGAN
29	F05150479	ROND.APPOGGIO MANOMETRI SV	PRESSURE GAUGE REST WASHER	ROND. LOGEMENT MANOMETRES SV	STsTZSCHEIBE MANOMETER SV	ARAND. SOPORTE MANOMETROS SV
30	G22250274	COLLEGAMENTO MANOMETRI SP-SV	PRESSURE GAUGE CONNECT. SP-SV	RACCORD MANOMETRES SP-SV	VERBINDUNG MANOMETER SP-SV	CONEXIN MANMETROS SP-SV LE
31	G15450342	PROTEZ.CINGHIA DEPRES.COMPLETO				
32	F03151288	VACUOM.0-100 MBAR C.SM.INC.D80				
33	G66248227	CUFFIA PROTEZIONE P.D.P.	POWER TAKE-OFF PROTECTION HOUS	PROTECTEUR PRISE DE PUISSANCE	SCHUTZKASTEN KRAFTABTRIEB	ENVOLTURA PROTECCIN T. DE P. G
34	F01200306	DADO M14X 2 U5588 6.8 ZN	NUT M14X2	ECROU M14X2	MUTTER M14X2	DADO M14X2
35	F20110770	CAV.Q.M14X 2X 50 96X119 ZN	U-BOLT M14X96 - 119 ZN	CAVALIER M14X96 - 119 ZN	VERBINDUNG M14X96 - 119 ZN	PERNO EN U M14X96 - 119 ZN
36	G18700690	RONDELLA 15 X40 X6 ZN	WASHER 15 X 40 X 6 ZN	RONDELLE 15 X40 X6 ZN	UNTERLEGSCHEIBE 15 X40 X6 ZN	ARANDELA 15 X40 X6 ZN
37	G15450390	PULEGGIA CONDOTTA	DRIVEN PULLEY D.28	POULIE ENTRAINEE D. 28	GETRIEBENE SCHEIBE D.28	POLEA CONDUCIDA D.28
38	F03151200	RACCORDO 90° C5 1/8' 6/8	UNION 90[C5 1/8" 6/8	RACCORD 90[C5 1/8" 6/8	ANSCHLUSSTsCK 90[C5 1/8' 6/8	UNIN 90 C5 1/8" 6/8 RA
39	G15450270	VITE 10X130 8.8 FIL.60 ZN	GALVANIZ. SCREW 10X130 8.8 FIL	VIS 10X130 8.8 FIL.60 ZN	SCHRAUBE 10X130 8.8 GEW.60 ZN	TORNILLO 10X130 8.8 FIL.60 ZN
40	F03100391	TUBO POLIURETANO 8-6				
41	G22230014	DISTANZIALE	SPACER	ENTRETOISE	DISTANZSTsCK	DISTANCIADOR
42	G15450091	SUPPORTO PULEGGIA CONDOTTA	DRIVEN PULLEY SUPPORT	SUPPORT POULIE ENTRAINEE	HALTERUNG GETRIEBENE RIEMENSCH	SOPORTE POLEA CONDUCIDA
43	G15450050	SUPPORTO DX	RIGHT SUPPORT	SUPPORT DRT	HALTERUNG RE	SOPORTE DER
44	F01020472	VITE M10X 1,5X25 U5739 8.8 ZN	BOLT 10X25 5739 8.G GALVANIZED	VIS 10X25 5739 8.G ZN	SCHRAUBE 10X25 5739 8.G ZN	TORNILLO 10X25 5739 8.G ZN
45	G15450280	PROTEZIONE DEPRESSORE	VACUUM PUMP PROTECTION	PROTECTION DEPRESSEUR	SCHUTZ VAKUUMPUMPE	PROTECCIN BOMBA DE VACO PR
46	F03100506	TUBO EOLO 45 NL1	EOLO PIPE 45 PU			
47	G22270093	VACUOMETRO COMPL. SP LM	VACUUM METER ASSY. SP LM	VACUOMETRE COMPL. SP LM	KOMPL. VAKUUMMETER SP LM	VACUMETRO COMPL. SP LM V
48	F01020050	VITE M 6X 1X 80 U5737 8.8 ZN	BOLT 6 X80 5737 8.G GALVANIZED	VIS 6 X80 5737 8.G ZN	SCHRAUBE 6 X80 5737 8.G ZN	TORNILLO 6 X80 5737 8.G ZN
49	F05150058	FASCETTA POLYAM.7,8X550 31920	POLYAMIDE FASTENING STRAPS 9X5	COLLIER POLYAMIDE 9X508 31920	SCHELLE POLYAMID 9X508 31920	ABRAZADERA POLIAMIDA 9X508 319
50	G10150291	GRIGLIA PROTEZIONE ZN	AIR PUMP PROTECT. GRID	GRILLE DE PROTECT.DISP. DEPRES	SCHUTZGITTER VAKUUMPUMPE	REJILLA DE PROTECCIN BOMBA VAG
51	F08011711	CARD.B1 Z6-Z6 L700	UNIVERSAL JOINT S10 0700F 112	CARD NORM S10 0700F1121121CAT	KARDAN S10 0700F 112 112 1CAT	CARDæN S10 0700F 112 112 1CAT
52	F05050020	TAPPO SALVAFILETTO D.39	CONVEYOR PLUG D.39	BOUCHON PROTEGE-FILET D. 39	GEWINDESCHUTZPFROPFEN D.39	TAPN GUARDARROSCA D.39 D
53	F03151206	RACCORDO DIR. C1 1/8' 6/8	UNION STRAIGHT C1 1/8" 6/8	RACCORD DRT. C1 1/8" 6/8	ANSCHLUSSTsCK GERADE C1 1/8"	UNIN DER. C1 1/8" 6/8 R
54	F06010161	CINGHIA POLY-V 1016 J-16 GOLE	BELT- POLY V 1016 J-16 GOLE	COURROIE POLY-V 1016 J-16 GORG	RIEMEN POLY-V 1016 J-16 RILLEN	CORREA POLY-V 1016 J-16 GARGA
55	G15450310	PULEGGIA MOTRICE 1000 GIRI	DRIVING PULLEY 1000 REVS	POULIE MOTRICE 1000T	ANTRIEBSSCHEIBE 1000 UMDREHUNG	POLEA MOTRIZ 1000 REVOLUCIONES

TAV. 63

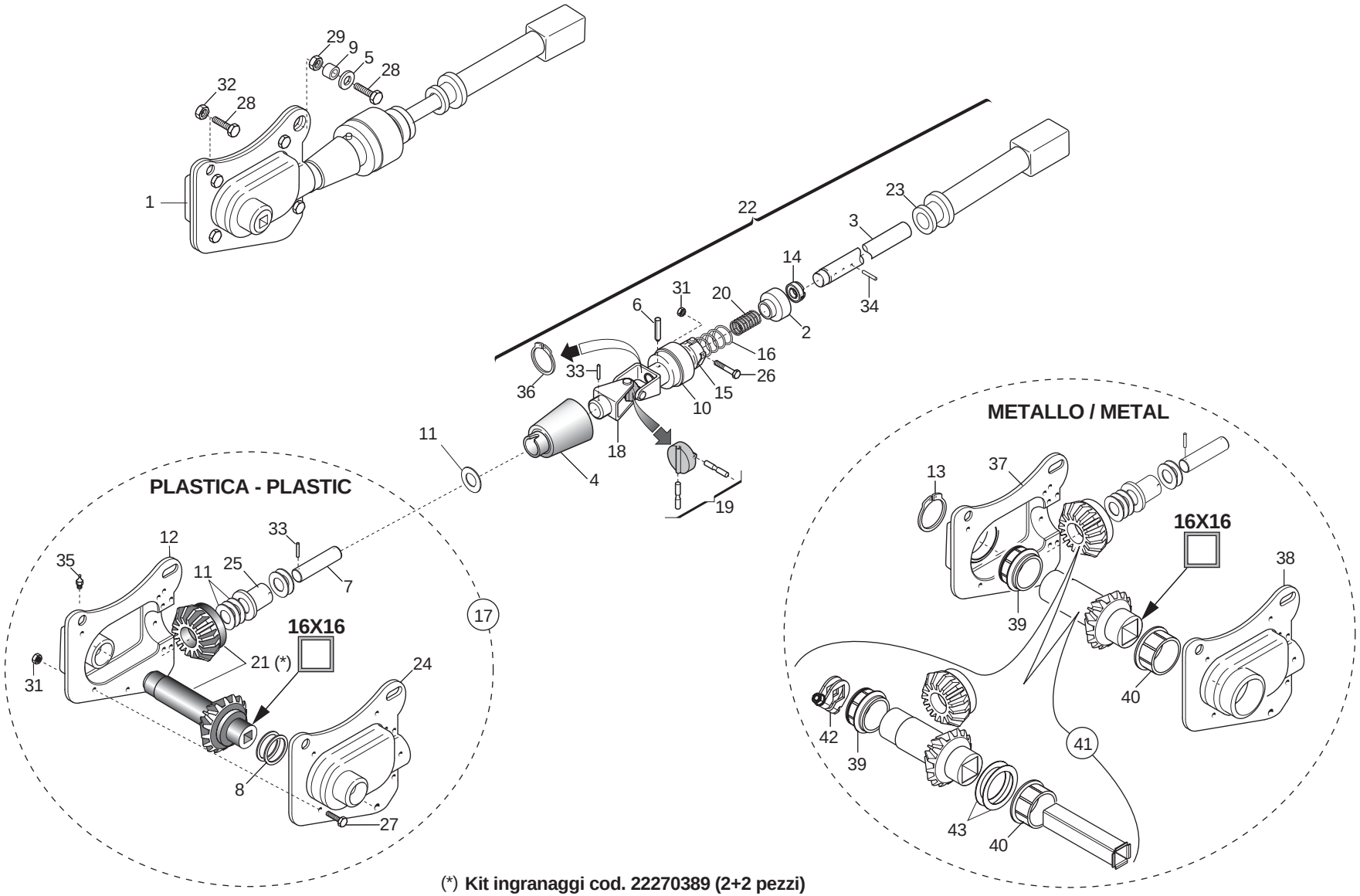

(*) **Kit ingranaggi cod. 22270389 (2+2 pezzi)**

SCATOLA DI RINVIO ELEMENTO

TAV. 63

Pos.	Cod.	Descrizione	Description	Description	Benennung	Descripcion
1	G16621060	MONT.SCATOLA RINVIO Q.16 EL.SP				
2	G66248102	ANELLO SICUREZZA SP	SAFETY RING	BAGUE SECURITE SP	SICHERHEITSRING SP	ANILLO DE SEGURIDAD SP
3	G15220691	ASSE AVVISATORE MT	SIGNALLING AXIS MT	AXE AVERTISSEUR MT	ACHSE SIGNALHUPE MT	EJE INDICADOR MT
4	G19002840	COPRICARDANO SUPERIORE	TOP CARDAN JOINT COVER	COUVRE-CARDAN SUPERIEUR	OBERE KARDANABDECKUNG	CUBRECARDæN SUPERIOR
5	G20970032	RONDELLA 32X4X8,5	WASHER 32X4X8-5	RONDELLE 32X4X8-5	UNTERLEGSCHEIBE 32X4X8-5	ARANDELA 32X4X8-5
6	G66248057	SPINA DI SICUREZZA SP	SAFETY PIN SP	BROCHE PLASTIC SECURITE CARDAN	SICHERHEITSSTIFT SP	CLAVIJA DE SEGURIDAD SP
7	G22270452	ALBERO SCATOLA RINVIO SP/S	INTERMEDIATE BOX SHAFT	ARBRE TRANSMISSION SP/S	WELLE VORGELEGEGEHZUSE SP/S	æRBOL CAJA DE TRANSMISIN SP/SA
8	G20970051	RONDELLA 40X0,6X32	WASHER 40X0-6X32	RONDELLE 40X0-6X32	UNTERLEGSCHEIBE 40X0-6X32	ARANDELA 40X0-6X32
9	G20980024	BOCCOLA 15X8,5X8	BUSHING 15X8-5X8	BOITE 15X8-5X8	BsCHSE 15X8-5X8	CASQUILLO 15X8-5X8
10	G22220071	AVVISATORE ACUSTICO	HOOTER	SIGNALISATION ACOUSTIQUE	HUPE	INDICADOR ACSTICO A
11	G22220073	RONDELLA 28X0,3X16,5	WASHER 28X0-3X16-5	RONDELLE 28X0-3X16-5	UNTERLEGSCHEIBE 28X0-3X16-5	ARANDELA 28X0-3X16-5
12	G22220102	CONCHIGLIA DX	RIGHT SHELL	COQUILLE DRT.	SCHALE RECHTS	MOLDE DER.
13	F02050179	ANELLO E. DE 42X U7435				
14	G22220105	BOCCOLA DI SPINTA	THRUST BUSHING	BOITE DE POUSSEE	SCHUBBsCHSE	CASQUILLO DE APRIETE
15	G22220155	ELEM.TENUTA MOLLE COMP.	SPRING SEAL ELEMENT ASSY.	ELEMENT D'ETANCHEITE RESSORTS	DICHTUNGSELEMENT FEDERN KOMP.	ELEM. RESISTENCIA MUELLES COMP
16	G65338039	MOLLA COMP.ZN INNESTO SP	ZN COUPLING COMP. SPRING SP	RESSORT COMPL. ZN ACCOUPLEM.	DRUCKFEDER ZN KUPPLUNG SP	MUELLE COMP.ZN ACOPLAMIENTO SP
17	G16033200	MONT.SCATOLA RINVIO PE >	TRANSFER CASE	BOITE RENVOI	VORGELEGEGEHZUSE	CAJA DE DISTRIBUCIN
18	G22270453	SNODO AVVISATORE SP/S	SIGNALLER ARTICULATION SP/S	ARTICULATION SIGNALISATION SP/	HUPGELENK SP/S	ARTICULACIN AVISADOR SP/S A
19	G22270454	CROCIERA COMPL. SP/S	SPIDER SP/S	CROSILLON COMPL CARDAN TRANSM	GELENKKREUZ KOMPL. SP/S	CRUCETA COMPL. SP/S
20	G65338018	MOLLA COMP.ZN SCATOLA RINV.SP	TRANSM. BOX COMP. SPRING . SP	RESSORT COMPL. ZN TRANSMISSION	DRUCKFEDER ZN VORGELEGEGEHZUSE	MUELLE COMP.ZN CAJA TRANSFER..
21	G22270389	2+2 INGR.SCATOLA DI RINVIO >	2+2 INTERM. TRANSM. GEAR BOX	COUPLE CON RENV ANGLE (2+2)	2+2 ZAHNRZDER VORGELEGEGEHZUSE	2+2 ENGRANAJES CAJA DE LA TRAN
22	G16620620	ASSE AVVISATORE SP COMPL.	COMPL. HORN SHAFT SP	AXE AVERTISSEUR SP COMPL.	ACHSE SIGNALHUPE SP KOMPL.	EJE AVISADOR SP COMPL.
23	G15421830	INNESTO	COUPLING	ACCOUPLEMENT	KUPPLUNG	ACOPLAMIENTO
24	G22220103	CONCHIGLIA SX	LEFT SHELL	COQUILLE GCH.	SCHALE LINKS	MOLDE IZQ.
25	G66349001	BOCCOLA	BUSHING	BOITE	B_CHSE	CASQUILLO
26	F01020041	VITE M 6X 1X 45 U5737 8.8 ZN	BOLT 6 X45 5737 8.G GALVANIZED	VIS 6 X45 5737 8.G ZN	SCHRAUBE 6 X45 5737 8.G ZN	TORNILLO 6 X45 5737 8.G ZN
27	F01020403	VITE M 6X 1X 16 U5739 8.8 ZN	BOLT M 6X16	VIS M 6X16	SCHRAUBE M 6X16	TORNILLO M 6X16
28	F01020440	VITE M 8X1,25X25 U5739 8.8 ZN	BOLT M8 X25 5739 8.8 ZN	VIS M8 X25 5739 8.8 ZN	SCHRAUBE M8 X25 5739 8.8 ZN	TORNILLO M8 X25 5739 8.8 ZN
29	F01200244	DADO M 8X1,25 U5588 6.8 ZN	NUT M8	ECROU M8	MUTTER M8	DADO M8
30	F01260021	DADO CIECO M8 U5721 5.8 ZN	CAP NUT M8 5.8 ZN UNI 5721	ECROU BORGNE M8 5.8 ZN UNI 57	BLINDE MUTTER M8 5.8 ZN UNI 57	TUERCA CIEGA M8 5.8 ZN UNI 572
31	F01220011	DADO M 6X 1 D980 8 ZN	SELF LOCKING NUT M6	ECROU AUTOBL. M6	SELBSTSPERR.MUTTER M6	DADO AUTOBL. M6
32	F01220022	DADO M 8X1,25 D980 8 ZN	SELF LOCKING NUT M8X1,25 980V	ECROU AUTOBL. M8X1,25 980-V	SELBSTSP.MUTT. M8X1,25 980-V	DADO AUTOBL. M8X1,25 980-V
33	F02100114	SPINA E.P. 6X 30 U6873 C70 BR	ELASTIC PIN 6X30	GOUJON ELASTIQUE 6X30	SPANNHUELSE 6X30	ESPINA ELASTICA 6X30
34	F02100121	SPINA E.P. 6X 40 U6873 C70 BR	ELASTIC PIN 6X40	GOUJON ELASTIQUE 6X40	SPANNHUELSE 6X40	PASADOR 6X40
35	F01100011	ING.M 6X1 7663-A 9SMNPB28 ZN	SPHERE NIPPLE M6X1/A	GRAISSEUR A BILLES M6X1/A	KUGELFETTBsCHSE M6X1/A	ENGRAS. DE ESFERAS M6X1/A
36	F02050045	ANELLO E. DE 16X 1 U7435 C70	SEEGER RING 16X 1 U7435 C70	BAGUE SEEGER 16 X 1 U7435 C70	SEEGERING 16 X 1 U7435 C70	ANILLO 16X 1 U7435 C70
37	G16620880	ASS.CONCHIGLIA DX				
38	G22505069	CONCHIGLIA SX	LEFT SHELL	COQUILLE GCH.	SCHALE LINKS	MOLDE IZQ.
39	G19005681	BOCCOLA EST.SCATOLA RINVIO				
40	G19005671	BOCCOLA INT.SCATOLA RINVIO				
41	G16621080	KIT INGR.RINVIO ZAMA				
42	G22505085	FERMO ASSE IN LAMIERA	PLATE AXLE STOP	ARRET AXE EN TOLE	FESTSTELLVORRICHTUNG BLECHACHS	BLOQUEO EJE DE CHAPA
43	G20970141	RONDELLA 50X37X0,6	WASHER 50X37X0-6	RONDELLE 50X37X0-6	UNTERLEGSCHEIBE 50X37X0-6	ARANDELA 50X37X0-6

TAV. 75

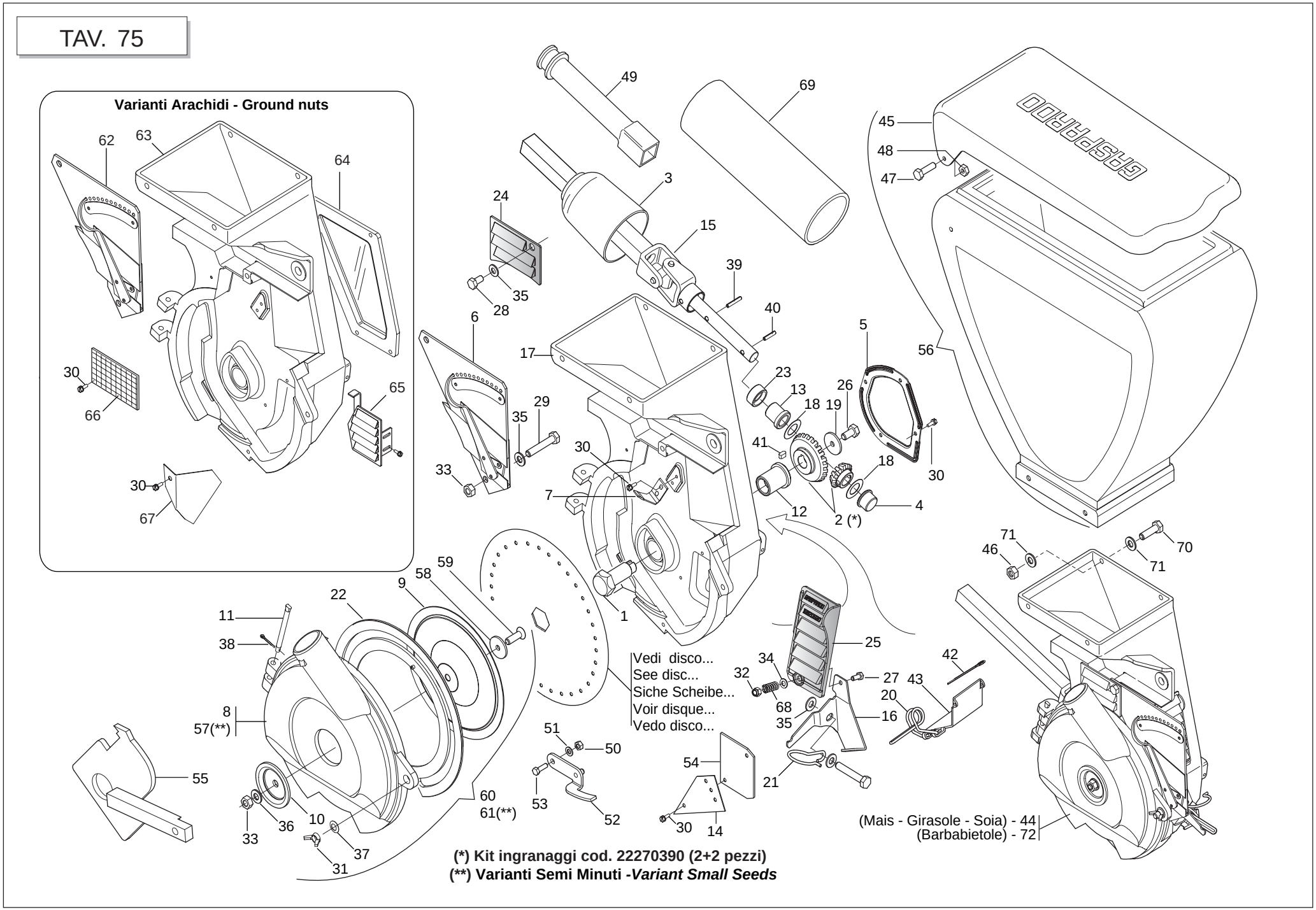

(*) Kit ingranaggi cod. 22270390 (2+2 pezzi)
(**) Varianti Semi Minuti -*Variant Small Seeds*

DISTRIBUTORE SEMI

TAV. 75

Pos.	Cod.	Descrizione	Description	Description	Benennung	Descripcion
1	G22230046	ASSE TRASMISSIONE DISCO	DISK GEAR AXLE	AXE ENTRAINEMENT DISQUE	ACHSE SCHEIBENANTRIEB	EJE TRANSMISIN DISCO A
2	G22270390	KIT COPPIA CONICA DISTRIB.SEMI	KIT- SEED DISTR. CONICAL PAIR	COUPLE CON DISTR GRAINES (2+2)	KIT KEGELTRIEB SAMEN SZAPPARAT	SET PAR CONICO DISTRIB. SEMILL
3	G66248094	COPRICARDANO SP	UNIVERSAL JOINT COVER SP	COUVRE-CARDAN SP	KARDANABDECKUNG SP	CUBRECARDæN SP
4	G66349008	BOCCOLA	BUSHING	BOITE	BsCHSE	CASQUILLO
5	G22230035	COPERCHIO SCATOLA INGRAN.	GEARWHEEL BOX COVER	COUVERCLE BOITE ENGRENAGE	DECKEL ZAHNRZDERGEHZUSE	TAPA CAJA ENGRAN.
6	G22230040	SELETTORE MOBILE COMPLETO	MOBILE SELECTOR ASSY.	SELECTEUR MOBILE COMPL.	KOMPL. BEWEGLICHER WZHLER	SELECTOR MVIL COMPLETO S
7	G22230041	SELETTORE FISSO	SELECTOR FIXED	SELECTEUR FIXE	FESTER WZHLER	SELECTOR FIJO
8	G13822430	COPERCHIO MAGGIORATO				
9	G22230037	TENUTA GUARNIZIONE	SEAL	BLOQUAGE GARNITURE	DICHTUNG	JUNTA ESTANCA
10	G16620470	TAPPO CENTRALE H=7,5	CENTRAL PLUG H=7.5	BOUCHON CENTRAL H=7,5	ZENTRALER PFROPFEN H=7,5	TAPËN CENTRAL H=7,5
11	G22230039	PERNO COPERCHIO	COVER PIN	PIVOT COUVERCLE	DECKELZAPFEN	PERNO TAPA
12	G66349002	BOCCOLA SINT.BASSOFONDO	BUSHING- SINTERED	BOITE FRITTEE	SYNTH. B_CHSE	CASQUILLO SINT.
13	G22270071	BOCCOLA COLL.SINTER.20X24	20X24 SINTERED COLLARED BUSH	BOITE COLLIER FRITTEE 20X24	ANSCHLUSSBUECHSE SINTER.20X24	CASQUILLO CONEX. SINTER.20X24
14	G22270204	PIASTRA ANTI TRABOCC.SEMI SP	SEED ANTI-OVERFLOW PLATE SP	PLAQUE ANTI-DEBORD.T GRAINES S	SAMENsBERLAUFPLATTE SP	PLACA ANTI DESBORDAMIENTO SEMI
15	G15421141	ASSE PORTA PIGNONE COMPL.	COMPL. PINION HOLDER SPINDLE	AXE PORTE PIGNON COMPL.	RITZELTRZGERACHSE KOMPLETT	EJE PORTAPI¾N COMPLETO A
16	G15421151	FERMO MOLLA FALCIONE	CUTTER SPRING STOP	ARRET RESSORT HACHOIR	FESTSTELLVOR. FEDER FUTTERSCHN	BLOQUEO MUELLE GUADA¾ADORA
17	G16620120	CORPO DI DISTRIBUZIONE SP540	DISTRIBUTION ASSEMBLY SP540	CORPS DE DISTRIBUTION SP540	STREUBEH-LTER SP540	CUERPO DISTRIBUCIËN SP540
18	G22220073	RONDELLA 28X0,3X16,5	WASHER 28X0-3X16-5	RONDELLE 28X0-3X16-5	UNTERLEGSCHEIBE 28X0-3X16-5	ARANDELA 28X0-3X16-5
19	F01420037	ROS.M6 6,4X 24X 2 U6593 ZN				
20	G18902951	MOLLA SPEC.ZN SCARICO	SPEC SPRING ZN DISCHARGE	RESSORT TRAPPE VIDANGE	SPEZIALFEDER ZN ENTLADUNG	MUELLE ESPEC. ZN DESCARGA
21	G18903180	MOLLA CONVOGLIATORE MICRO	MICRO CONVEYOR SPRING	RESSORT CONVOYEUR MICRO	FEDER MIKRO FTRDERER	MUELLE CONDUCTOR MICRO
22	G66248068	GUARNIZIONE COPERCH.DISTR. SP	DISTRIB. COVER GASKET. SP	JOINT ETANCH PORTE SP520/540	DICHTUNG SZAPPARATDECKEL SP	JUNTA TAPA DISTR. SP
23	G66248219	ANELLO PARAPOLVERE SP-520	DUST COVER RING	BAGUE PARE-POUSSIERE SP-520	STAUBSCHUTZRING SP-520	ANILLO GUARDAPOLVO SP-520
24	G16620540	PORTA DI PROTEZIONE	SAFETY HATCH	PORTE DE PROTECTION	SCHUTZÍFFNUNG	PUERTA DE PROTECCIËN
25	G16620530	PORTA DI CONTROLLO	INSPECTION DOOR	PORTE CONTROLE	KONTROLLTsR	PUERTA DE CONTROL
26	F01020403	VITE M 6X 1X 16 U5739 8.8 ZN	BOLT M 6X16	VIS M 6X16	SCHRAUBE M 6X16	TORNILLO M 6X16
27	F01020382	VITE M 5X0,8X 25 U5739 8.8 ZN	BOLT 5 X25 5739 8.G GALVANIZ.	VIS 5 X25 5739 8.G ZN	SCHRAUBE 5 X25 5739 8.G ZN	TORNILLO 5 X25 5739 8.G ZN
28	F01020432	VITE M 8X1,25X16 U5739 8.8 ZN	BOLT M 8X16	VIS M 8X16	SCHRAUBE M 8X16	TORNILLO M 8X16
29	F01020451	VITE M 8X1,25X45 U5739 8.8 ZN	BOLT M 8X45	VIS M 8X45	SCHRAUBE M 8X45	TORNILLO M 8X45
30	F01070011	VIT.A.4,2X1,41X 9,5 6950 4.8NI	BOLT- SELF-TAPPING 4-2X9-5T.E.	VIS AUTOTAR. 4-2X9-5 T. E. COU	SELBSTSCHNEID. SCHRAUBE 4-2X9-	TORNILLO AUTORROSC. 4-2X9-5
31	F01240024	DADO M 8X1,25 U5448 5.8 ZN	NUT 8 UNI 5448 5.8 ZN	ECROU 8 UNI 5448 5.8 ZN	MUTTER 8 UNI 5448 5.8 ZN	TUERCA 8 UNI 5448 5.8 ZN
32	F01230019	DADO M 5X 0,8 D982 8 ZN	NORM.SELF-LOCKING NUT 5 GALVAN	ECROU AUTOB.NOR.5 ZN	SELBSTSP. MUTTER NOR.5 ZN	TUERCA AUTOB. NOR. 5 ZN
33	F01200244	DADO M 8X1,25 U5588 6.8 ZN	NUT M8	ECROU M8	MUTTER M8	DADO M8
34	F01410023	ROS.M5 5,3X 10X 1 U6592 ZN	WASHER D5 UNI 6592 ZN	RONDELLE D5 UNI 6592 ZN	UNTERLEGSCHEIBE D5 UNI 6592 ZN	ARANDELA D5 UNI 6592 ZN
35	F01410051	ROS.M8 8,4X 17X1,6 U6592 ZN	PLANE WASHER D.8	RONDELLE D.8	SCHEIBE D.8	ARANDELA D.8
36	F01430059	ROS.M8 8,4X 15X0,8 U8842J ZN	WASHER D8 DIN 6798 D.INT.ZN	RONDELLE D8 DIN 6798 D. INT. Z	UNT. SCHEIBE D8 DIN 6798 D. IN	ARANDELA D8 DIN 6798 D.INT.ZN
37	F01460115	ROS.OND. 8,4X 15X0,5 BR D137A	WASHER D8 DIN 137/A	RONDELLE D8 DIN 137/A	UNTERLEGSCHEIBE D8 DIN 137/A	ARANDELA D8 DIN 137/A
38	F02200137	COPIGLIA 2X 15 U1336 ZN	SPLIT PIN 2 X15 1336 GALVAN.	GOUPILLE 2 X15 1336 ZN	SPLINT 2 X15 1336 ZN	PASADOR 2 X15 1336 ZN
39	F02100079	SPINA E.P. 5X 16 U6873 C70 BR				
40	F02100083	SPINA E.P. 5X 24 U6873 C70 BR	PIN EL. 5 X24 DIN 1481	FICHE EL. 5 X24 DIN 1481	SPANNSTIFT 5 X24 DIN 1481	CLAVIJA EL.5 X24 DIN 1481
41	F02150012	LINGUETTA 5X 5X 10 U6604A	TAB 05X5X10 UNI6604	LANGUETTE 05X5X10 UNI6604	FEDERKEIL 05X5X10 UNI6604	LENGsETA 05X5X10 UNI6604
42	F02200200	COPIGLIA 4X 70 U1336 ZN	SPLIT PIN 4 X70 1336 GALVAN.	GOUPILLE 4 X70 1336 ZN	SPLINT 4 X70 1336 ZN	PASADOR 4 X70 1336 ZN
43	G15421870	PORTA DI SCARICO DISTRIBUTORE	DISTRIBUTOR DISCHARGE DOOR	PORTE DE DECHARGEMENT DISTRIB,	ENTLADUNGSTsR SZAPPARAT	PUERTA DESCARGA DISTRIBUIDOR
44	G16620101	CORPO DISTRIBUTORE COMPL.SP540	COMPL. DISTRIBUTOR BODY SP540	CORPS DISTRIBUTEUR COMPL.SP540	STREUERKÍRPER, KOMPL.SP540	CUERPO DISTRIBUIDOR COMPL.SP54
45	G19002750	COPERCHIO SERBATOIO SEME 530	SEED TANK COVER 530	COUVERCLE RES GRAINES 530-MT	SAMENBEHZLTERDECKEL 530	TAPA DEPSITO SEMILLA 530 A
46	F01220011	DADO M 6X 1 D980 8 ZN	SELF LOCKING NUT M6	ECROU AUTOBL. M6	SELBSTSPERR.MUTTER M6	DADO AUTOBL. M6
47	F01020403	VITE M 6X 1X 16 U5739 8.8 ZN	BOLT M 6X16	VIS M 6X16	SCHRAUBE M 6X16	TORNILLO M 6X16
48	F01200232	DADO M 6X 1 U5588 6.8 ZN				
49	G15421830	INNESTO	COUPLING	ACCOUPLEMENT	KUPPLUNG	ACOPLAMIENTO
50	F01200220	DADO M 5X 0,8 U5588 6.8 ZN	NUT 5 UNI 5588 6.8 GALVANIZED	ECROU 5 UNI 5588 6.8 ZN	MUTTER 5 UNI 5588 6.8 ZN	TUERCA 5 UNI 5588 6.8 ZN
51	F01430035	ROS.M5 5,3X 10X0,6 U8842J ZN	WASHER D5 DIN 6798 D.INT.ZN	RONDELLE D5 DIN 6798 D. INT. Z	UNT. SCHEIBE D5 DIN 6798 D. IN	ARANDELA D5 DIN 6798 D.INT.ZN
52	G16620010	ESPULSORE SEMI BIETOLA	SUGAR BEET EJECTOR	EXPULSEUR BETTES	AUSWERFER RÜBEN	EXPULSOR REMOLACHA
53	F01020381	VITE M5X 0,8X 20 U5739 A2 IX	BOLT 5X20 5739	VIS 5X20 5739	SCHRAUBE 5X20 5739	TORNILLO 5X20 5739
54	G22270133	PIASTRINA ANTI TRABOC.SEMI MIN	MINUTE SEED PLATE SP	PLAQUETTE GRAINES PETITES SP	PLZTTCHEN KLEINE SAMEN SP	PLAQUETA SEMILLAS PEQUE¾AS SP
55	G16620360	DIMA SELETTORE FISSO	POSITION PLATE FOR FIXED SELEC	GABARIT POSITION SELECTEUR FIX	EINSTELLEHRE F_R FIXEN ABSTREI	PLACA PARA LA POSICIËN SELECTO

TAV. 75

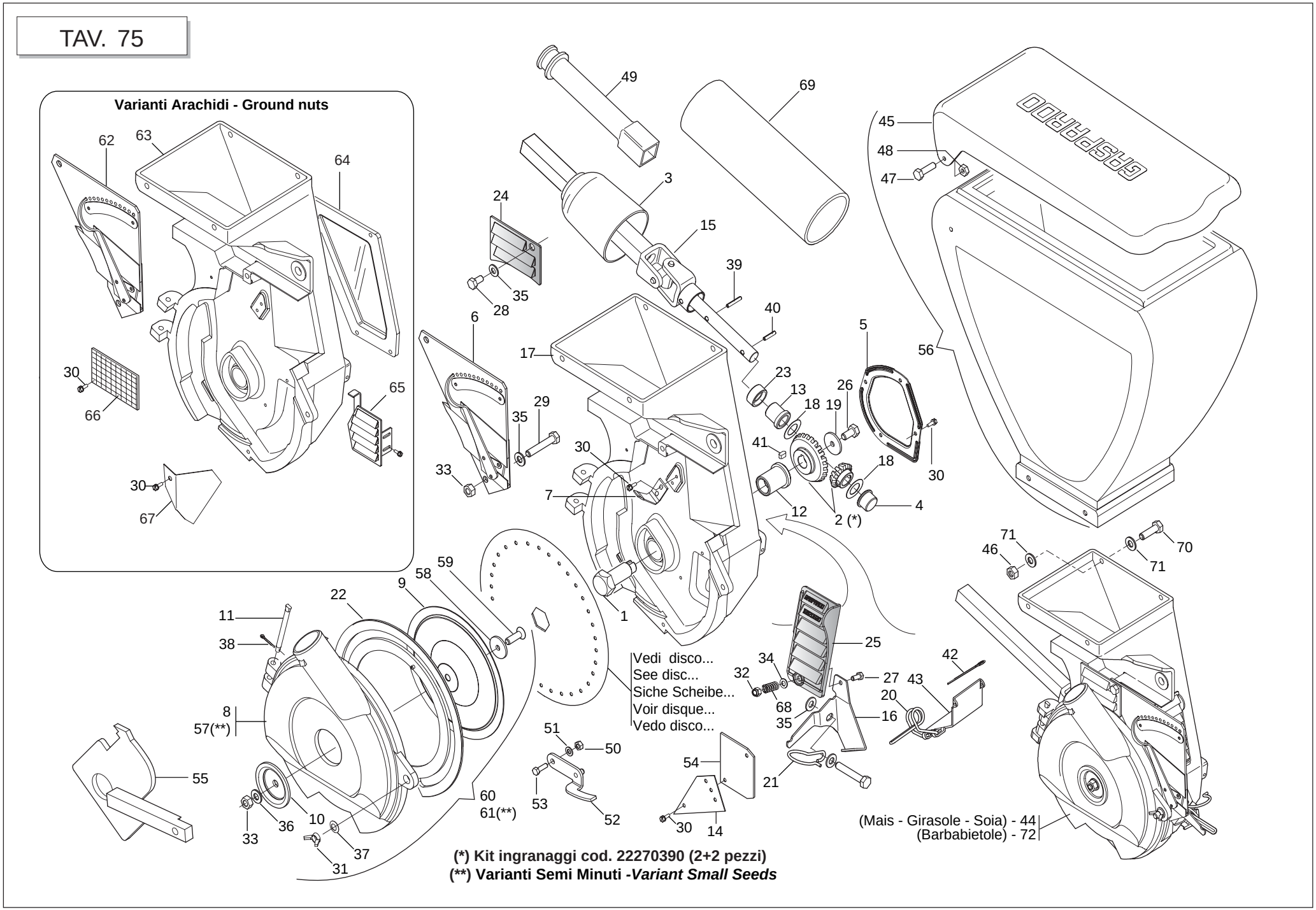

(*) Kit ingranaggi cod. 22270390 (2+2 pezzi)
(**) Varianti Semi Minuti -*Variant Small Seeds*

DISTRIBUTORE SEMI

TAV. 75

Pos.	Cod.	Descrizione	Description	Description	Benennung	Descripcion
56	G15422241	SERBATOIO SEME COMPLETO SP	SEED TANK ASSY.	RESERVOIR GRAINES COMP PLA SP	SAMENBEHZLTER KOMPLETT	DEPSITO SEMILLAS COMPLETO B
57	G16620450	COPERCHIO MAGGIORATO SEMI MIN.	INCREASED SEED DISTRIB. COVER	COUVERC. MAJOR.DISTRIB. GRAINE	_BERBEM. DECKEL SAMENSZAPPARAT	TAPA SOBREDIMENS. DISTRIB. SEM
58	G18701890	RONDELLA D.8,5 SVASATA ZN.	FLARED WASHER D.8.5 ZN.	RONDELLE D.8,5 +VAS+E ZN.	F-CHERSCHEIBE D.8,5 ZN.	ARANDELA Ï 8,5 ABOCINADA ZN.
59	F01030055	VITE M 8X1,25X20 U5933 10.9 ZD	BOLT M 8X20	VIS M 8X20	SCHRAUBE M 8X20	TORNILLO M 8X20
60	G13822440	COPERCHIO MAGGIOR.D45 COMPLETO	ASSY.INCREASED COVER	COUVERC. MAJOR.COMPL.	sBERBEM. DECKEL KOMPLETT	TAPA SOBREDIMENS. COMPLETO
61	G16620460	COPERCHIO SEMI MINUTI COMPL.	COMPL. MINUTE SEED COVER	COUVERCLE GRAINES PETITES COMP	DECKEL KLEINSAMEN KOMPL.	TAPA SEMILLAS PEQUEðAS COMPL
62	G22270128	SELETTORE MOBILE ARACHIDI SP	MOBILE SELECTOR- PEANUTS SP	SELECTEUR MOBILE ARACHIDES SP	BEWEGLICHER WZHLER ERDNsSSE SP	SELECTOR MVIL CACAHUETES. S
63	G15422520	CORPO DISTRIBUTORE ARACHIDI SP	PEANUT DISTRIBUTION CASING	CORPS DE DISTRIBUTION ARACHIDE	VERTEILUNGSKTRPER ERDNsSSE	CUERPO DE DISTRIBUC.CACAHUETES
64	G22270132	FINESTRELLA CONTR.ARACHIDI SP	PEANUT CONTRA. WINDOW SP	FENETRE CONTR. ARACHIDES SP	LUKE ERDNUSSKONTROLLE SP	VENTANILLA CONTR. CACAHUETES.
65	G22230033	PORTA CONTROLLO SEME	SEED INSPECTION DOOR	PORTE CONTROLE GRAINES	KONTROLLTsR SAMEN	PUERTA DE CONTROL SEMILLAS
66	G22270095	GRIGLIA PROTEZIONE SP	PROTECT. GRID SP	GRILLE PROTECTION SP	SCHUTZGITTER SP	REJILLA PROTECCIN SP G
67	G22270130	PIASTRINA ANTI TRABOC.ARACHIDI	PEANUT CLOSING PLATE	PLAQUETTE FERMETURE ARACH. SP	ABSCHLUSSPLZTTCHEN ERDNsSSE SP	PLAQUETA CIERRE CACAHUETES SP
68	G18904240	MOLLA APERTURA PORTA CONTROLLO	SPRING	RESSORT	FEDER	MUELLE
69	G19005100	TUBO D.63X3X280 NERO	PIPE D.63X3X280	TUBE D.63X3X280	ROHR D.63X3X280	TUBO D.63X3X280
70	F01020404	VITE M 6X 1X20 U5739 8.8 ZN	BOLT 6X20 5739 8.G GALVANIZED	VIS 6X20 5739 8.G ZN	SCHRAUBE 6X20 5739 8.G ZN	TORNILLO 6X20 5739 8.G ZN
71	F01420036	ROS.M6 6,4X 18X 2 U6593 ZN	FLAT WASHER 6-6X 18X2 6593 ZN	ROND. PLATE 6-6X 18X2 6593 ZN	SCHEIBE 6-6X 18X2 6593 ZN	ARAND. PLANA 6-6X 18X2 6593 ZN
72	G16620061	CORPO DISTRIBUZIONE BIETOLE	BEET DISTRIBUTION ASSEMBLY	CORPS DISTRIBUTION BETTERAVES	STREUBEH-LTER R_BEN	CUERPO DISTRIBUCIËN REMOLACHAS

TAV. 230

Codice *Code* Code *Kodex* Codigo	Nr e fori *Nr and ø holes* Nr et trous *Nr und ø löcher* Nr y agujeros		Coltura	*Seeds*	Cultures	*Samen*	Semillas	Distanza semina Seeding dist. Dist. de semis Saatabstandes Dist. siembra
22230298	20	0,8 **(1)**						
22230319	20	1 **(1)**	Cavolo broccolo	*Broccoli*	Chou-Broccoli	*Brokkoli*	Bróculi	
22230327	20	1,1 **(1)**	Cavolo verza	*Cabbage,Savoy*	Chou de Milan	*Wirsing*	Col de Milán	
22230320	20	1,5						
22230294	20	2,1	Zucchino Melone Anguria Cardo	*Squash* *Melon* *Watermelon* -	Courgette Melon Past que -	*Kürbis* *Melone* *Wassermelone* -	Calabacín Melón Sandía -	**min.10,4 cm.**
22230203	20	2,5	Girasole	*Sunflower*	Tournesol	*Sonnenblumen*	Girasol	
22230192	20	3,5	Cotone Mais (Piccolo)	*Cotton* *Corn (Little)*	- Mais (Petit)	*Baumwohl* *Mais (Klein)*	- Maiz (Peque o)	**max. 41,7 cm.**
22230048	20	4,5	Mais	*Corn*	Mais	*Mais*	Maiz	
22230047	20	5,5	Mais (Grosso) Ceci Fagiolo borlotto e cannellino Arachidi	*Corn (Big)* *Pulses* *Beans* *Peanut*	Mais (Gros) - Haricot -	*Mais (Grosse)* - *Bohnen* -	Maiz (Grueso) - Poroto -	
22230205	20	7	Arachidi Lupino	*Peanut* -	- -	- -	- -	
10124030R	26	1 **(1)**						
22230253	26	1,5						
22230296	26	2,1	Zucchino Melone Anguria Cardo	*Squash* *Melon* *Watermelon* -	Courgette Melon Past que -	*Kürbis* *Melone* *Wassermelone* -	Calabacín Melón Sandía -	**min. 8 cm.**
22230289	26	2,5	Girasole	*Sunflower*	Tournesol	*Sonnenblumen*	Girasol	
22230249	26	3,5	Cotone Mais (Piccolo)	*Cotton* *Corn (Little)*	- Mais (Petit)	*Baumwohl* *Mais (Klein)*	- Maiz (Peque o)	
22230050	26	4,5	Mais	*Corn*	Mais	*Mais*	Maiz	**max. 32,1 cm.**
22230303	26	5						
22230049	26	5,5	Mais (Grosso) Ceci Fagiolo borlotto e cannellino Arachidi	*Corn (Big)* - *Beans* -	Mais (Gros) - Haricot -	*Mais (Grosse)* - *Bohnen* -	Maiz (Grueso) - Poroto -	
22230317	36	1,1 **(1)**	Pomodoro	*Tomato*	Tomate	*Tomate*	Tomate	
22230196	36	1,5	Lenticchia Cetriolo Pomodoro conf. 2,5÷3,5 mm	- *Cucumber* *Tomato pilled* *ø 2,5÷3,5 mm*	- Concombre Tomate enrob 2,5÷3,5 mm	- *Gurke* *Tomate pilliert* *ø 2,5÷3,5 mm*	- Pepino Tomate conf. 2,5÷3,5 mm	
22230051	36	2,1	Barbabietola Zucchino Melone Anguria Cardo Sorgo Sesamo	*Beets* *Squash* *Melon* *Watermelon* - *Sorghum* -	Betteraves Courgette Melon Past que - Sorgo -	*Rüben* *Kürbis* *Melone* *Wassermelone* - *Hirse* -	Remolacha Calabacín Melón Sandía - Sorgo -	**min. 5,8 cm.**

Codice *Code* Code *Kodex* Codigo	Nr e fori *Nr and ø holes* Nr et trous *Nr und ø löcher* Nr y agujeros		Coltura	*Seeds*	Cultures	*Samen*	Semillas	Distanza semina Seeding dist. Dist. de semis Saatabstandes Dist. siembra
22230290	36	2,5	Pomodoro conf. 3,5÷4,5 mm Ginseng	*Tomato pilled* *ø 3,5÷4,5 mm* *Ginseng*	Tomate enrob 3,5÷4,5 mm Ginseng	*Tomate pilliert* *ø 3,5÷4,5 mm* *Ginseng*	Tomate conf. 3,5÷4,5 mm Ginseng	**max. 23,2 cm.**
22230197	36	3,5	Fagiolino Piselli Soia	*Beans (Little)* *Peas* *Soyabeans*	Haricot (Petit) Pois Soja	*Grüne Bohnen* *Erbsen* *Soja*	Judias verdes Arveja Soja	
22230199	36	4,5	Fagiolo Piselli Favino	*Beans* *Peas* -	Haricot Pois -	*Bohnen* *Erbsen* -	Poroto Arveja -	
22230295	36	5,5	Fagiolo	*Beans*	Haricot	*Bohnen*	Poroto	
10123760R	36	5,5 **(2)**	Fagiolo	*Beans*	Haricot	*Bohnen*	Poroto	
22230304	36	7						
22230321	52	1,5						**min. 4 cm.**
22230328	52	2,1	Barbabietola	*Beets*	Betteraves	*Rüben*	Remolacha	
22230299	52	2,5						
22230316	52	3,5	Fagiolino	*Beans (Little)*	Haricot (Petit)	*Grüne Bohnen*	Judias verdes	
22230288	52	4,25	Soia	*Soyabeans*	Soja	*Soja*	Soja	**max. 16 cm.**
22230194	72	0,5 **(1)**	Endivia Lattuga	*Endive* *Lettuce*	Chicor e Laitue	*Winterendivien* *Kopfsalat*	Escarola Lechuga	
22230195	72	0,8 **(1)**	Endivia Lattuga Rapa Senape Finocchio Anice	*Endive* *Lettuce* *Turnip* *Mustard* *Fennel* -	Chicor e Laitue Navet Moutarde Fenouil -	*Winterendivien* *Kopfsalat* *Speiserüben* *Senft* *Fenchel* -	Escarola Lechuga Nabo - Hinojo -	
22230193	72	1,1 **(1)**	Pomodoro Rapa Finocchio Colza Panico	*Tomato* *Turnip* *Fennel* *Canola* -	Tomate Navet Fenouil Colza -	*Tomate* *Speiserüben* *Fenchel* *Raps* -	Tomate Nabo Hinojo Colza -	**min. 2,9 cm.**
22230257	72	1,5	Spinacio Ravanello Asparagio Pomodoro conf. 2,5÷3,5 mm	*Spinach* *Radish* *Asparagus* *Tomato pilled* *ø 2,5÷3,5 mm*	Epinard Radis Asperge Tomate enrob 2,5÷3,5 mm	*Spinat* *Radies* *Spargel* *Tomate pilliert* *ø 2,5÷3,5 mm*	Espinaca Rabanito Espárrago Tomate conf. 2,5÷3,5 mm	**max. 11,6 cm.**
22230213	72	2,1	Bieta a coste Saggina	*Swiss Chard* -	Poir e -	*Mangold* -	Acelga -	
10124040R	72	2,5						
22230198	72	3,5	Fagiolino Soia	*Beans (Little)* *Soyabeans*	Haricot (Petit) Soja	*Grüne Bohnen* *Soja*	Judias verdes Soja	
10124020R	72	4,25	Soia	*Soyabeans*	Soja	*Soja*	Soja	
22230256	72	4,5						

DISCHI DI SEMINA

TAV. 230

Pos.	Cod.	Descrizione	Description	Description	Benennung	Descripcion
1	G10121460	DISCO 96 FORI D 1,0 SP	DISK 96 HOLES D.1,0 SP	DISQUE 96 TROUS D. 1,0 SP	SCHEIBE 96 LTCHER D.1,0 SP	DISCO 96 ORIFICIOS D. 1,0 SP
2	G10123970	DISCO 102 F.D.2 SP	DISK 102 HOLES D. 2 SP	DISQUE 102 TROUS D. 2 SP	SCHEIBE 102 LTCHER D.2 SP	DISCO 102 ORIFICIOS D. 2 SP
3	G10124010	DISCO 60 FORI D.4,5 SP LM	DISK 60 HOLES D.4-5 SP LM	DISQUE 60 TROUS D. 4-5 SP LM	SCHEIBE 60 LTCHER D.4-5 SP LM	DISCO 60 ORIFICIOS D.4-5 SP LM
4	G10124020	DISCO 72 FORI D.4,25 SP LM	DISK 72 HOLES D.4-25 SP LM	DISQUE 72 TROUS D. 4-25 SP LM	SCHEIBE 72 LTCHER D.4-25 SP	DISCO 72 ORIFICIOS D.4-5 SP LM
5	G10124030	DISCO ACC. 26 FORI D 1,0 SP	STEEL DISK 26 HOLES D 1.0 SP	DISQUE ACC. 26 TROUS D 1-0 SP	SCHEIBE ZUB. 26 LTCHER D 1-0 S	DISCO AC. 26 ORIFICIOS D 1-0 S
6	G10124040	DISCO ACC. 72 FORI D 2,5 SP	DISK ST. 72 H. D 2,5	DISQUE ACIER 72 TROUS D 2,5	STAHLSCHEIBE 72 L. D 2,5	DISCO ACERO 72 ORIF. D 2,5
7	G10124050	DISCO ACC.104 FORI D 1,1 SP	STEEL DISC 104 HOLES D 1.1 SP	DISQUE ACIER 104 TROUS D 1,1	STAHLSCHEIBE 104 BOHR. D 1,1	DISCO ACC.104 AGUJEROS D 1,1
8	G10124060	DISCO 26 F. D.4	DISC 26 F. D.4	DISQUE 26 TROUS D.4	SCHEIBE 26 B. D.4	DISCO 26 AGUJEROS ï 4
9	G10124070	DISCO 36 FORI D 1,7 SP LM	DISK 36 HOLES D.1.7 SP LM	DISQUE 36 TROUS D.1,7 SP LM	SCHEIBE 36 LTCHER D.1,7 SP LM	DISCO 36 ORIFICIOS D.1,7 SP LM
10	G10124090	DISCO 6 FORI D.4,5	DISK 6 HOLES D.4,5	DISQUE 6 TROUS D. 4,5	SCHEIBE 6 LTCHER D.4,5	DISCO 6 ORIFICIOS D.4,5
11	G10124100	DISCO 6 FORI D.3,0	DISK 6 HOLES D.3,0	DISQUE 6 TROUS D. 3,0	SCHEIBE 6 LTCHER D.3,0	DISCO 6 ORIFICIOS D.3,0
12	G22230047	DISCO 20 F. D.5,5 SP LM	DISK 20 H. D.5-5 CORN SP LM	DISQUE 20 TROUS D. 5-5 MAIS SP	SCHEIBE 20 L. D.5-5 MAIS SP LM	DISCO 20 ORIF. D.5-5 MAZ SP LD
13	G22230048	DISCO 20 F. D.4,5 SP LM	DISK 20 H. D.4-5 SUNF..SP LM	DISQUE 20 TROUS D. 4-5 TOURN.	SCHEIBE 20 L. D.4-5 SONNENBLU.	DISCO 20 ORIF. D.4-5 GIRA.SP L
14	G22230049	DISCO 26 F. D.5,5 SP LM	DISK 26 H. D.5-5 CORN SP LM	DISQUE 26 TROUS D. 5-5 MAIS SP	SCHEIBE 26 L. D.5-5 MAIS SP LM	DISCO 26 ORIF. D.5-5 MAZ SP LD
15	G22230050	DISCO 26 F. D.4,5 SP LM	DISK 26 H. D.4-5 CORN SP LM	DISQUE 26 TROUS D. 4-5 MAIS	SCHEIBE 26 L. D.4-5 MAIS	DISCO 26 ORIF. D.4-5 MAIZ SP L
16	G22230051	DISCO 36 F. D.2,1 SP LM	DISK 36 H. D.2-1 BEET.SP LM	DISQUE 36 TROUS D. 2-1 BETTES	SCHEIBE 36 L.R. D.2-1 RsBEN SP	DISCO 36 ORIF. D.2-1 REMOLACHA
17	G22230192	DISCO 20 FORI D.3,5 SP LM	DISK 20 HOLES D.3-5 SP LM	DISQUE 20 TROUS D. 3-5 SP LM	SCHEIBE 20 LTCHER D.3-5 SP LM	DISCO 20 ORIFICIOS D.3-5 SP LM
18	G22230193	DISCO 72 FORI D.1,1 SP LM	DISK 72 HOLES D.1-1 SP LM	DISQUE 72 TROUS D. 1-1 SP LM	SCHEIBE 72 LTCHER D.1-1 SP LM	DISCO 72 ORIFICIOS D.1-1 SP LM
19	G22230194	DISCO 72 FORI D.0,5 SP LM	DISK 72 HOLES D.0-5 SP LM	DISQUE 72 TROUS D. 0-5 SP LM	SCHEIBE 72 LTCHER D.0-5 SP LM	DISCO 72 ORIFICIOS D.0-5 SP LM
20	G22230195	DISCO 72 FORI D.0,8 SP LM	DISK 72 HOLES D.0-8 SP LM	DISQUE 72 TROUS D. 0-8 SP LM	SCHEIBE 72 LTCHER D.0-8 SP LM	DISCO 72 ORIFICIOS D.0-8 SP LM
21	G22230196	DISCO 36 FORI D.1,5 SP LM	DISK 36 HOLES D.1-5 SP LM	DISQUE 36 TROUS D. 1-5 SP LM	SCHEIBE 36 LTCHER D.1-5 SP LM	DISCO 36 ORIFICIOS D.1-5 SP LM
22	G22230197	DISCO 36 FORI D.3,5 SP LM	DISK 36 HOLES D.3-5 SP LM	DISQUE 36 TROUS D. 3-5 SP LM	SCHEIBE 36 LTCHER D.3-5 SP LM	DISCO 36 ORIFICIOS D.3-5 SP LM
23	G22230198	DISCO 72 FORI D.3,5 SP LM	DISK 72 HOLES D.3-5 SP LM	DISQUE 72 TROUS D. 3-5 SP LM	SCHEIBE 72 LTCHER D.3-5 SP LM	DISCO 72 ORIFICIOS D.3-5 SP LM
24	G22230199	DISCO 36 FORI D.4,5 SP LM	DISK 36 HOLES D.4-5 SP LM	DISQUE 36 TROUS D. 4-5 SP LM	SCHEIBE 36 LTCHER D.4-5 SP LM	DISCO 36 ORIFICIOS D.4-5 SP LM
25	G22230203	DISCO 20 F0RI D.2,5 SP LM	DISK 20 HOLES D.2-5 SP LM	DISQUE 20 TROUS D. 2-5 SP LM	SCHEIBE 20 LÖCHER D.2-5 SP LM	DISCO 20 ORIF. D.2-5 SP LM
26	G22230205	DISCO 20 F. D.7,0 ARAC.SP LM	DISK 20 H. D.7-0 PEAN..SP LM	DISQUE 20 TROUS D. 7-0 ARACHID	SCHEIBE 20 L. D.7-0 ERDNUSS SP	DISCO 20 ORIF. D.7-0 CACAH. SP
27	G22230213	DISCO 72 FORI D.2,1 SP LM	DISK 72 HOLES D.2-1 SP LM	DISQUE 72 TROUS D. 2-1 SP LM	SCHEIBE 72 LTCHER D.2-1 SP LM	DISCO 72 ORIFICIOS D.2-1 SP LM
28	G22230216	DISCO 144 FORI D.1,1 SP LM	DISK 144 HOLES D.1-1 SP LM	DISQUE 144 TROUS D. 1-1 SP LM	SCHEIBE 144 LTCHER D.1-1 SP LM	DISCO 144 ORIFICIOS D.1-1 SP L
29	G22230217	DISCO 36 FORI D.5,5 SP LM	DISK 36 HOLES D.5-5 SP LM	DISQUE 36 TROUS D. 5-5 SP LM	SCHEIBE 36 LTCHER D.5-5 SP LM	DISCO 36 ORIFICIOS D.5-5 SP LM
30	G22230249	DISCO 26 FORI D 3,5 SP LM	DISK 26 HOLES D 3-5 SP LM	DISQUE 26 TROUS D 3-5 SP LM	SCHEIBE 26 LTCHER D 3-5 SP LM	DISCO 26 ORIFICIOS D 3-5 SP LM
31	G22230250	DISCO 144 FORI D.2,1 SP LM	DISK 144 HOLES D.2-1 SP LM	DISQUE 144 TROUS D. 2-1 SP LM	SCHEIBE 144 LTCHER D.2-1 SP LM	DISCO 144 ORIFICIOS D.2-1 SP L
32	G22230253	DISCO 26 FORI D.1,5 SP LM	DISK 26 HOLES D.1-5 SP LM	DISQUE 26 TROUS D. 1-5 SP LM	SCHEIBE 26 LTCHER D.1-5 SP LM	DISCO 26 ORIFICIOS D.1-5 SP LM
33	G22230256	DISCO 72 FORI D.4,5 SP LM	DISK 72 HOLES D.4-5 SP LM	DISQUE 72 TROUS D. 4-5 SP LM	SCHEIBE 72 LTCHER D.4-5 SP LM	DISCO 72 ORIFICIOS D.4-5 SP LM
34	G22230257	DISCO 72 FORI D.1,5 SP LM	DISK 72 HOLES D.1-5 SP LM	DISQUE 72 TROUS D. 1-5 SP LM	SCHEIBE 72 LTCHER D.1-5 SP LM	DISCO 72 ORIFICIOS D.1-5 SP LM
35	G22230287	DISCO 144 FORI D.1,5 SP LM	DISK 144 HOLES D.1-5 SP LM	DISQUE 144 TROUS D. 1-5 SP LM	SCHEIBE 144 LTCHER D.1-5 SP LM	DISCO 144 ORIFICIOS D.1-5 SP L
36	G22230288	DISCO 52 FORI D.4,25 SP LM	DISK 52 HOLES D.4-25 SP LM	DISQUE 52 TROUS D. 4-25 SP LM	SCHEIBE 52 LTCHER D.4-25 SP LM	DISCO 52 ORIFICIOS D.4-25 SP L
37	G22230289	DISCO 26 FORI D.2,5 SP LM	DISK 26 HOLES D.2-5 SP LM	DISQUE 26 TROUS D. 2-5 SP LM	SCHEIBE 26 LTCHER D.2-5 SP LM	DISCO 26 ORIFICIOS D.2-5 SP LM
38	G22230290	DISCO 36 FORI D.2,5 SP LM	DISK 36 HOLES D.2-5 SP LM	DISQUE 36 TROUS D. 2-5 SP LM	SCHEIBE 36 LTCHER D.2-5 SP LM	DISCO 36 ORIFICIOS D.2-5 SP LM
39	G22230294	DISCO 20 FORI D.2,1 SP LM	DISK 20 HOLES D.2-1 SP LM	DISQUE 20 TROUS D. 2-1 SP LM	SCHEIBE 20 LTCHER D.2-1 SP LM	DISCO 20 ORIFICIOS D.2-1 SP LM
40	G22230296	DISCO 26 FORI D.2,1 SP LM	DISK 26 HOLES D.2-1 SP LM	DISQUE 26 TROUS D. 2-1 SP LM	SCHEIBE 26 LÖCHER D.2-1 SP LM	DISCO 26 ORIFICIOS D.2-1 SP LM
41	G22230297	DISCO 144 FORI D.0,8 SP LM	DISK 144 HOLES D.0-8 SP LM	DISQUE 144 TROUS D. 0-8 SP LM	SCHEIBE 144 LTCHER D.0-8 SP LM	DISCO 144 ORIFICIOS D.0-8 SP L
42	G22230298	DISCO 20 FORI D.0,8 SP LM	DISK 20 HOLES D.0-8 SP LM	DISQUE 20 TROUS D. 0-8 SP LM	SCHEIBE 20 LTCHER D.0-8 SP LM	DISCO 20 ORIFICIOS D.0-8 SP LM
43	G22230299	DISCO 52 FORI D.2,5 SP LM	DISK 52 HOLES D.2-5 SP LM	DISQUE 52 TROUS D. 2-5 SP LM	SCHEIBE 52 LTCHER D.2-5 SP LM	DISCO 52 ORIFICIOS D.2-5 SP LM
44	G22230300	DISCO POST.10G-3F-D2,1 SP LM	DISK POST.10G-3F-D2-1 SP LM	DISQUE ARRIERE 10G. 3 TROUS D2	HINTERSCHEIBE 10G-3L-D2-1 SP L	DISCO TRAS.10G. 3 ORIF. D2-1 S
45	G22230301	DISCO 144 FORI D.0,5 SP LM	DISK 144 HOLES D.0-5 SP LM	DISQUE 144 TROUS D. 0-5 SP LM	SCHEIBE 144 LTCHER D.0-5 SP LM	DISCO 144 ORIFICIOS D.0-5 SP L
46	G22230303	DISCO 26 FORI D.5,0 SP LM	DISK 26 HOLES D.5-0 SP LM	DISQUE 26 TROUS D. 5-0 SP LM	SCHEIBE 26 LTCHER D.5-0 SP LM	DISCO 26 ORIFICIOS D.5-0 SP LM
47	G22230304	DISCO 36 FORI D.7 LM	DISK 36 HOLES D.7 LM	DISQUE 36 TROUS D. 7 LM	SCHEIBE 36 LTCHER D.7 LM	DISCO 36 ORIFICIOS D.7 LM
48	G22230306	DISCO 12 FORI D.2,1 SP LM	DISK 12 HOLES D.2-1 SP LM	DISQUE 12 TROUS D. 2-1 SP LM	SCHEIBE 12 LTCHER D.2-1 SP LM	DISCO 12 ORIFICIOS D.2-1 SP LM
49	G22230316	DISCO 52 FORI D.3,5 SP LM	DISC 52 HOLES D.3-5 SP LM	DISQUE 52 TROUS D. 3-5 SP LM	SCHEIBE 52 LTCHER D.3-5 SP LM	DISCO 52 ORIFICIOS D.3-5 SP LM
50	G22230317	DISCO 36 FORI D.1,1 SP LM	DISK 36 HOLES D.1-1 SP LM	DISQUE 36 TROUS D. 1-1 SP LM	SCHEIBE 36 LTCHER D.1-1 SP LM	DISCO 36 ORIFICIOS D.1-1 SP LM
51	G22230318	DISCO 10 FORI D.1,5 SP LM	DISK 10 HOLES D.1-5 SP LM	DISQUE 10 TROUS D. 1-5 SP LM	SCHEIBE 10 LTCHER D.1-5 SP LM	DISCO 10 ORIFICIOS D.1-5 SP LM
52	G22230319	DISCO 20 FORI D.1,0 SP LM	DISK 20 HOLES D.1-0 SP LM	DISQUE 20 TROUS D. 1-0 SP LM	SCHEIBE 20 LTCHER D.1-0 SP LM	DISCO 20 ORIFICIOS D.1-0 SP LM
53	G22230320	DISCO 20 FORI D.1,5 SP LM	DISK 20 HOLES D.1-5 SP LM	DISQUE 20 TROUS D. 1-5 SP LM	SCHEIBE 20 LTCHER D.1-5 SP LM	DISCO 20 ORIFICIOS D.1-5 SP LM
54	G22230321	DISCO 52 FORI D.1,5 SP LM	DISK 52 HOLES D.1-5 SP LM	DISQUE 52 TROUS D. 1-5 SP LM	SCHEIBE 52 LTCHER D.1-5 SP LM	DISCO 52 ORIFICIOS D.1-5 SP LM
55	G22230322	DISCO 80 FORI D.1,5 SP LM	DISK 80 HOLES D.1-5 SP LM	DISQUE 80 TROUS D. 1-5 SP LM	SCHEIBE 80 LTCHER D.1-5 SP LM	DISCO 80 ORIFICIOS D.1-5 SP LM
56	G22230323	DISCO 100 FORI D.1,5 SP LM	DISK 100 HOLES D.1-5 SP LM	DISQUE 100 TROUS D. 1-5 SP LM	SCHEIBE 100 LTCHER D.1-5 SP LM	DISCO 100 ORIFICIOS D.1-5 SP L
57	G22230324	DISCO 120 FORI D.1,5 SP LM	DISK 120 HOLES D.1-5 SP LM	DISQUE 120 TROUS D. 1-5 SP LM	SCHEIBE 120 LTCHER D.1-5 SP LM	DISCO 120 ORIFICIOS D.1-5 SP L
58	G22230325	DISCO 160 FORI D.1,5 SP LM	DISK 160 HOLES D.1-5 SP LM	DISQUE 160 TROUS D. 1-5 SP LM	SCHEIBE 160 LTCHER D.1-5 SP LM	DISCO 160 ORIFICIOS D.1-5 SP L
59	G22230326	DISCO 180 FORI D.1,5 SP LM	DISK 180 HOLES D.1-5 SP LM	DISQUE 180 TROUS D. 1-5 SP LM	SCHEIBE 180 LTCHER D.1-5 SP LM	DISCO 180 ORIFICIOS D.1-5 SP L
60	G22230327	DISCO 20 FORI D.1,1 SP LM	DISK 20 HOLES D.1-1 SP LM	DISQUE 20 TROUS D. 1-1 SP LM	SCHEIBE 20 LTCHER D.1-1 SP LM	DISCO 20 ORIFICIOS D.1-1 SP LM
61	G22230328	DISCO 52 FORI D.2,1 SP LM	DISK 2 HOLES D.2-1 SP LM	DISQUE 52 TROUS D. 2-1 SP LM	SCHEIBE 52 LTCHER D.2-1 SP LM	DISCO 52 ORIFICIOS D.2-1 SP LM
62	G22230332	DISCO 13 FORI D.3,5 SP LM	DISK 13 HOLES D.3.5 SP LM	DISQUE 13 TROUS D.3-5 SP LM	SCHEIBE 13 LTCHER D.3-5 SP LM	DISCO 13 ORIFICIOS D.3-5 SP

TAV. 84

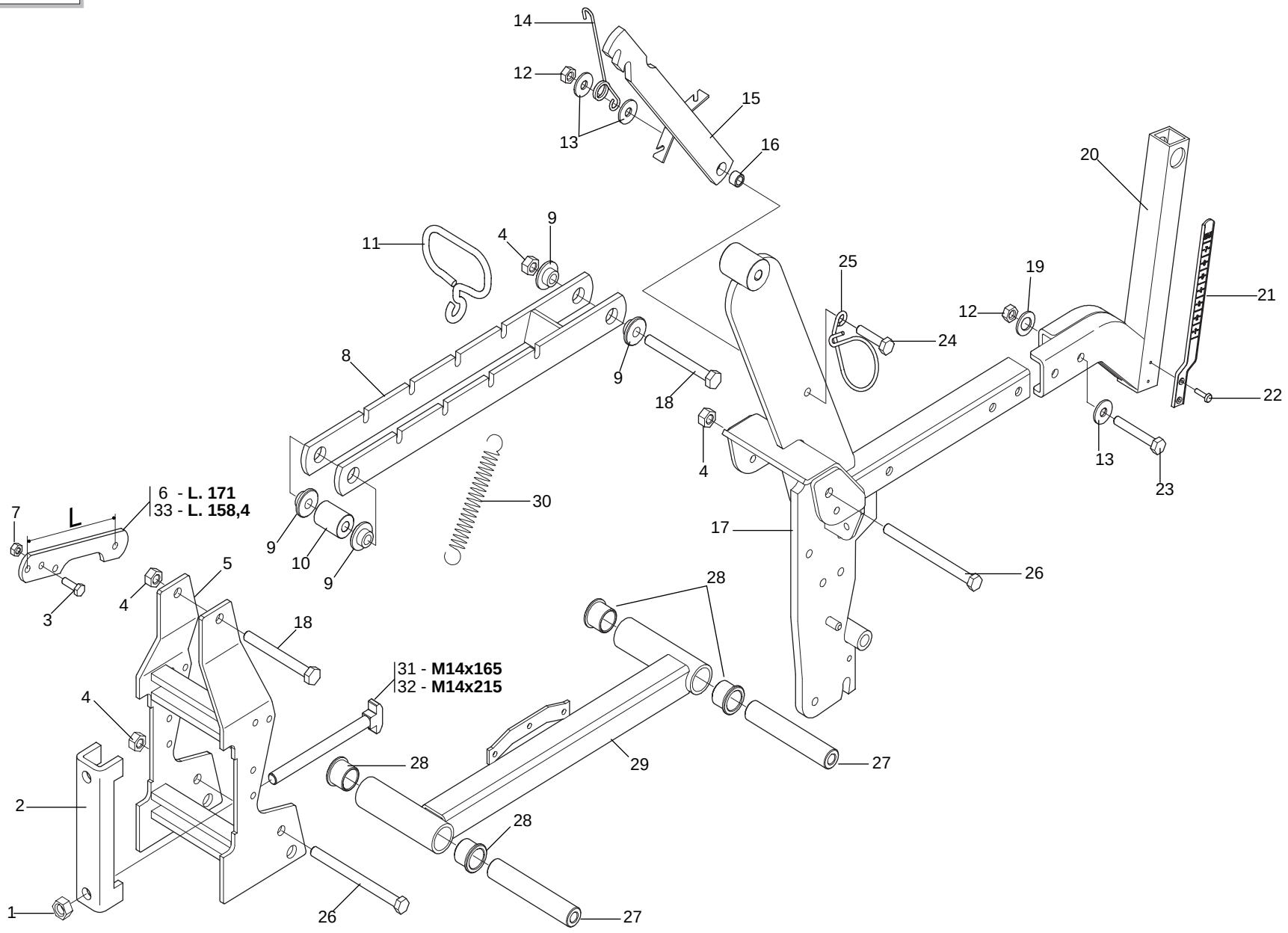

GASPARDO

TELAIO ELEMENTO

TAV. 84

Pos.	Cod.	Descrizione	Description	Description	Benennung	Descripcion
1	F01200306	DADO M14X 2 U5588 6.8 ZN	NUT M14X2	ECROU M14X2	MUTTER M14X2	DADO M14X2
2	G19204030	SCONTRO FISS.150 2F D15				
3	F01020440	VITE M 8X1,25X25 U5739 8.8 ZN	BOLT M8 X25 5739 8.8 ZN	VIS M8 X25 5739 8.8 ZN	SCHRAUBE M8 X25 5739 8.8 ZN	TORNILLO M8 X25 5739 8.8 ZN
4	F01220048	DADO M12X1,75 D980 8 ZN	SELF LOCKING NUT M12X1,75 980V	ECROU AUTOBL. M12X1,75 980-V	SIEHE 00553312	DADO AUTOBL. M12X1,75 980-V
5	G15421111	PIASTRA ATTACCO 150	COUPLING PLATE 150	PLAQUE ATTELAGE 150	KUPPLUNGSPLATTE 150	PLACA CONEXIN 150 P
6	G16620130	SUPPORTO SCATOLA RINVIO	SUPPORT BOITE DE RENVOI	GEARBOX SUPPORT	HALTERUNG VORGELEGEGEH-USE	SOPORTE CAJA TRANSMISI-N
7	F01220022	DADO M 8X1,25 D980 8 ZN	SELF LOCKING NUT M8X1,25 980V	ECROU AUTOBL. M8X1,25 980-V	SELBSTSP.MUTT. M8X1,25 980-V	DADO AUTOBL. M8X1,25 980-V
8	G15420102	PARALLELO SUPERIORE	UPPER PARALLEL	PARALL. SUP.	PARALLELOGRAMM OBEN	PARALELO SUPERIOR
9	G15421232	BOCCOLA BRACCIO PARALLELO SP.8	ARM BUSHING PARALLEL SP.8	BOITE BRAS PARALLELE SP.8	BsCHSE ARM PARALLEL SP.8	CASQUILLO BRAZO PARALELO SP.8
10	G18802170	BOCCOLA 12,25X30X40 ZN	BUSHING 12,25X30X40 ZN	BOITE 12,25X30X40 ZN	BsCHSE 12,25X30X40 ZN	CASQUILLO 12,25X30X40 ZN
11	G18903690	ATTACCO MOLLA	SPRING COUPLING	FIXATION RESSORT	KUPPLUNG FEDER	CONEXIN MUELLE O
12	F01200270	DADO M10X 1,5 U5588 6.8 ZN	NUT M10	ECROU M10	MUTTER M10	DADO M10
13	F01420060	ROS.M10 10,5X 30X2,5 U6593 ZN	WASHER 10,5X30	RONDELLE 10,5X30	SCHEIBE 10,5X30	ARANDELA 10,5X30
14	G18902880	MOLLA FERMO PARALLELO SP	PARALLEL STOP SPRING SP	RESSORT ARRET PARALLELE SP	FEDER FESTSTELLVORRICHT. PARAL	MUELLE BLOQUEO PARALELO SP
15	G16620160	FERMO PARALLELO	PARALLEL LOCK	ARRET PARALLELOGRAMME	FESTSTELLVORRICHTUNG PARALLELO	BLOQUEO PARALELO
16	G18801610	BOCCOLA 10,25X16 X11 ZN	BUSHING 10.25 X 16 X 11- GALVA	BOITE 10-25X16 X11 ZN	BsCHSE 10-25X16 X11 ZN	CASQUILLO 10-25X16 X11 ZN
17	G16620310	CORPO CENTRALE SP540	CENTRAL CASING SP540	CORPS CENTRALE SP540	MITTELKTRPER SP540	CUERPO CENTRAL SP540
18	F01020168	VITE M12X1,75X90 U5737 8.8 ZN	BOLT 12X90 5737 8.G GALVANIZED	VIS 12X90 5737 8.G ZN	SCHRAUBE 12X90 5737 8.G ZN	TORNILLO 12X90 5737 8.G ZN
19	F01430023	ROS.M10 10,5X 18X0,9 U8842J ZN	WASHER D10 DIN 6798 D.INT.ZN	RONDELLE D10 DIN 6798 D. INT.	UNT. SCHEIBE D10 DIN 6798 D.IN	ARANDELA D10 DIN 6798 D.INT.ZN
20	G16620550	SUPPORTO REGOLAZIONE	REGULATION SUPPORT	SUPPORT R+GLAGE	HALTERUNG EINSTELLUNG	SOPORTE REGULACIËN
21	G19003400	ASTA INDICAZIONE PROFONDITA'	DEPTH INDICATING ROD	TIGE INDICATION PROFONDEUR	TIEFENANZEIGESTAB	VARILLA INDICACIÓN PROFUNDIDAD
22	F02250077	RIVETTO STR. 3X 14 U9200A AL	3X14 ALUMINIUM PULL RIVET	RIVET A RUPTURE 3X14 ALUMINIUM	REISSNIETE3X14 ALL.	REMACHE DESGAR. 3X14 ALL.
23	F01020122	VITE 10X 1,5X 70 U5737 8.8 ZN	BOLT 10X 1,5X 70 U5737 8.8 ZB	VIS 10X 1,5X 70 U5737 8.8 ZB	SCHR.10X 1,5X 70 U5737 8.8 ZB	TORN.10X 1,5X 70 U5737 8.8 ZB
24	F01020112	VITE M10X 1,5X45 U5737 8.8 ZN	BOLT 10X45 5737 8.G GALVANIZED	VIS 10X45 5737 8.G ZN	SCHRAUBE 10X45 5737 8.G ZN	TORNILLO 10X45 5737 8.G ZN
25	G18903140	MOLLA GUIDATUBO	PIPE GUIDE SUPPORT	RESSORT GUIDE-TUBE	FEDER ROHRFsHRUNG	MUELLE GUA TUBOS A
26	F01020183	VITE 12X1,75X170 U5737 8.8 ZN	BOLT 12X170 5737 8.G GALVANIZ.	VIS 12X170 5737 8.G ZN	SCHRAUBE 12X170 5737 8.G ZN	TORNILLO 12X170 5737 8.G ZN
27	G22230057	MOZZO ANTERIORE	ANT. HUB	MOYEU AVANT	VORDERNABE	CUBO DELANTERO
28	G66349003	BOCCOLA SINT.	BUSHING- SINTERED	BOITE FRITTEE	SYNTH. BUECHSE	CASQUILLO SINT.
29	G15420122	BRACCIO INFERIORE	LOWER ARM	BRAS INFERIEUR	UNTERER ARM	BRAZO INFERIOR
30	G65337015	MOLLA TRAZ.ZN REGOL.ELEM. SP	TRACTION SPRING ZN REGUL. ELEM	RESSORT TRACT. ZN REGL. ELEMEN	ZUGFEDER ZN ELEMENTEINSTELLUNG	MUELLE TRAC. ZN REGUL.ELEM. SP
31	G16610010	VITE A MARTELLO M14X165	WINGED SCREW M14X165	VIS A TETE MARTEAU M14X165	ZWEIFLÜGEL- SCHRAUBEN M14X165	TORNILLO DE MARIPOSA M14X165
32	G16610020	VITE A MARTELLO M14X215	WINGED SCREW M14X215	VIS A TETE MARTEAU M14X215	ZWEIFLÜGEL- SCHRAUBEN M14X215	TORNILLO DE MARIPOSA M14X215
33	G15422091	SUPPORTO SCATOLA RINVIO	GEARBOX SUPPORT	SUPPORT BOITE DE RENVOI	HALTERUNG VORGELEGEGEH-USE	SOPORTE CAJA TRANSMISIËN

TAV. 96

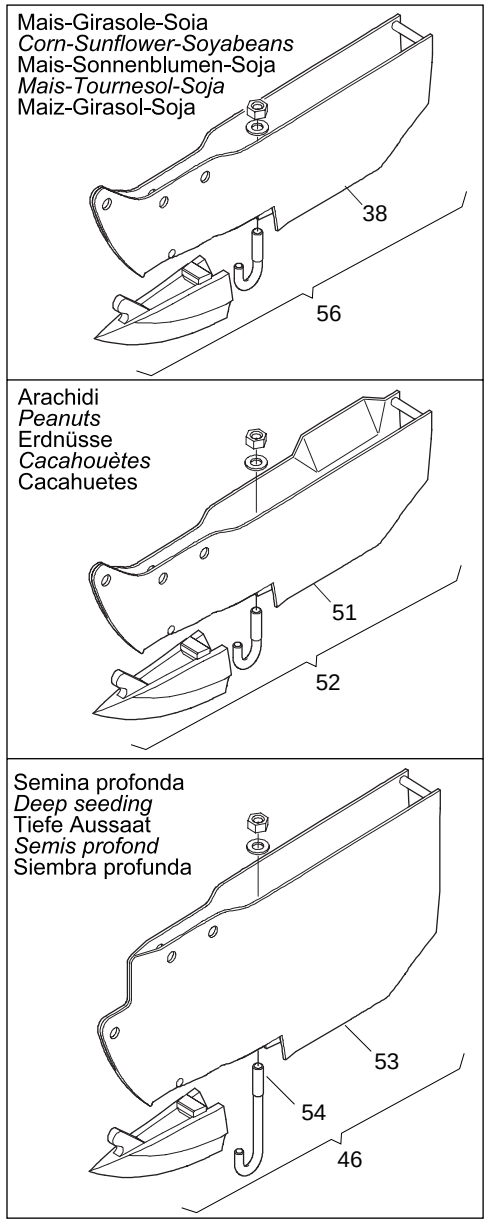

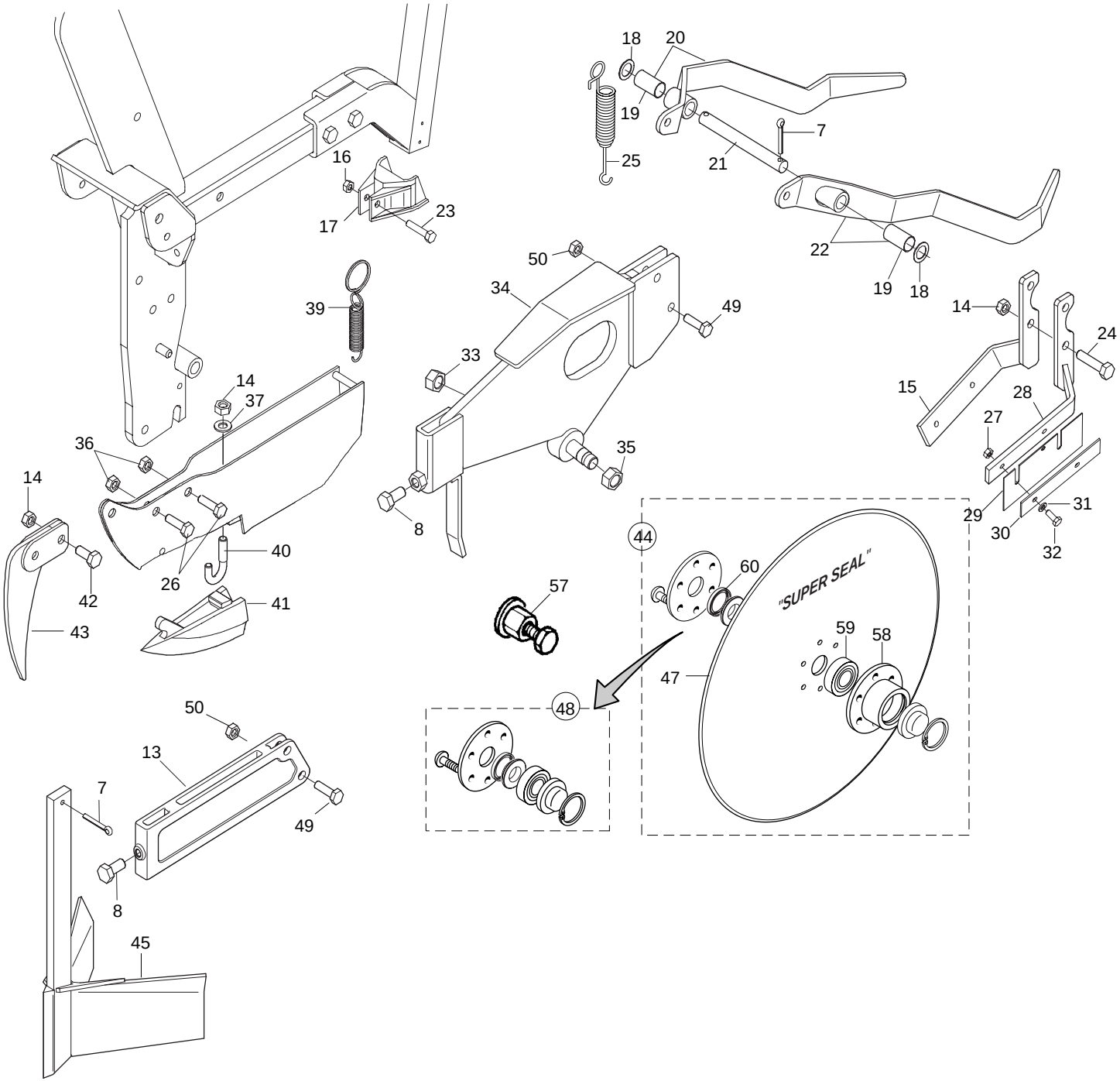

GASPARDO

ELEMENTI ASSOLCATORI

TAV. 96

Pos.	Cod.	Descrizione	Description	Description	Benennung	Descripcion
1	G65337015	MOLLA TRAZ.ZN REGOL.ELEM. SP	TRACTION SPRING ZN REGUL. ELEM	RESSORT TRACT. ZN REGL. ELEMEN	ZUGFEDER ZN ELEMENTEINSTELLUNG	MUELLE TRAC. ZN REGUL.ELEM. SP
2	G18903690	ATTACCO MOLLA	SPRING COUPLING	FIXATION RESSORT	KUPPLUNG FEDER	CONEXIN MUELLE O
3	G15422420	ATTACCO MOLLA SPARTIZOLLE	SOD BREAKER SPRING COUPLING	FIXATION RESSORT ECART. MOTTES	FEDERANSCHLUSS KLOTENRZUMER	CONEXIN MUELLE DIVISOR TERRONO
4	F01220022	DADO M 8X1,25 D980 8 ZN	SELF LOCKING NUT M8X1,25 980V	ECROU AUTOBL. M8X1,25 980-V	SELBSTSP.MUTT. M8X1,25 980-V	DADO AUTOBL. M8X1,25 980-V
5	G15422400	ASSE SPARTIZOLLE MOBILE	MOBILE SOD BREAKER SPINDLE	AXE ECARTEUR MOTTES MOBILE	ACHSE MOBILER KLOTENRZUMER	EJE DIVISOR DE TERRONES MVIL A
6	G15422390	SUPPORTO SPARTIZOLLE MOBILE	MOBILE SOD BREAKER SUPPORT	SUPP. ECARTEUR MOTTES MOBILE	HALTERUNG MOBILER KLOTENRZUMER	SOPORTE DIVISOR DE TERRONES MO
7	F02200227	COPIGLIA 5X 30 U1336 ZN	SPLIT PIN 5 X30 1336 GALVAN.	GOUPILLE 5 X30 1336 ZN	SPLINT 5 X30 1336 ZN	PASADOR 5 X30 1336 ZN
8	F01020510	VITE M12X1,75X30 U5739 8.8 ZN	BOLT M 12X30	VIS M 12X30	SCHRAUBE M 12X30	TORNILLO M 12X30
9	G15422410	FERMO SPARTIZOLLE MOBILE	MOBILE SOD BREAKER STOP	ARRET ECARTEUR MOTTES MOBILE	FESTSTELLVOR. MOBILER KLOTENRZ	BLOQUEO DIVISOR DE TERRONES MO
10	G18800560	BOCCOLA 8,25 X16 X7	BUSHING 8.25 X 16 X 7	BOITE 8-25 X16 X7	BsCHSE 8-25 X16 X7	CASQUILLO 8-25 X16 X7
11	F01420048	ROS.M8 8,4X 24X 2 U6593 ZN	PLANE WASHER D.8	RONDELLE D.8	SCHEIBE D.8	ARANDELA D.8
12	F01020063	VITE M8X1,25X 35 U5737 8.8 ZN	BOLT 8 X35 5737 8.G GALVANIZED	VIS 8 X35 5737 8.G ZN	SCHRAUBE 8 X35 5737 8.G ZN	TORNILLO 8 X35 5737 8.G ZN
13	G19203990	SUPP.SPARTIZOLLE				
14	F01200270	DADO M10X 1,5 U5588 6.8 ZN	NUT M10	ECROU M10	MUTTER M10	DADO M10
15	G15422211	SUPP.RASCHIATERRA DISCHI DX	RIGHT SOIL SCRAPER DISC SUPP.	SUPP.RACLE-BOUE DISQUES DRT	HALTER.ERDSCHABER SCHEIBEN REC	SOP.RASCADOR TIERRA DISCOS DER
16	F01230022	DADO M 6X 1 D982 8 ZN	NORM.SELF-LOCKING NUT 6 GALVAN	ECROU AUTOB.NOR.6 ZN	SELBSTSP. MUTTER NOR.6 ZN	TUERCA AUTOB. NOR. 6 ZN
17	G19002701	PROTEZIONE FOTOCELLULA >	PHOTOCELL PROTECTION	PROTECT CAPT PHOTOC SP4 >	SCHUTZ PHOTOZELLE	PROTECCIN FOTOCLULA PR
18	G18701820	RONDELLA 16,5X25X1,0 ZN	WASHER 16.5 X 25 X 1- GALVAN.	RONDELLE 16,5 X25 X1 ZN	UNTERLEGSCHEIBE 16,5 X25 X1 ZN	ARANDELA 16,5 X25 X1 ZN
19	F04150024	BOCCOLA PAP 15X17X25	PAP BUSH 15X17X25	BOITE PAP 15X17X25	BsCHSE PAP 15X17X25	CASQUILLO PAP 15X17X25
20	G16620690	COPRISEME MAIS DX				
21	G15421080	ASSE COPRISEME ZN	SEED COVER SPINDLE ZN	AXE COUVRE-GRAINES	SAMENDECKACHSE ZN	EJE CUBRESEMILLA ZN
22	G16620700	COPRISEME MAIS SX				
23	F01020408	VITE M 6X 1X 30 U5739 8.8 ZN	BOLT M 6X1X30	VIS M 6X1X30	SCHRAUBE M 6X1X30	TORNILLO M 6X1X30
24	F01020110	VITE M10X 1,5X40 U5737 8.8 ZN	BOLT 10X40 5737 8.G GALVANIZED	VIS 10X40 5737 8.G ZN	SCHRAUBE 10X40 5737 8.G ZN	TORNILLO 10X40 5737 8.G ZN
25	G18903170	MOLLA TRAZ.ZN RASCHIAT. SP530	TRACTION SPRING ZN SCRAPER SP5	RESSORT TRACT. ZN RACLEUR SP53	ZUGFEDER ZN ABSCHABER SP530	MUELLE TRAC. ZN RASCADOR SP530
26	F01020476	VITE M10X 1,5X30 U5739 8.8 ZN	BOLT M 10X30	VIS M 10X30	SCHRAUBE M 10X30	TORNILLO M 10X30
27	F01200232	DADO M 6X 1 U5588 6.8 ZN				
28	G15422221	SUPP.RASCHIATERRA DISCHI SX	LEFT SOIL SCRAPER DISC SUPP.	SUPP.RACLE-BOUE DISQUES GCH	HALTER.ERDSCHABER SCHEIBEN LIN	SOP.RASCADOR TIERRA DISCOS IZQ
29	G15422231	RASCHIATERRA DISCO				
30	G15423400	DISTANZIALE	SPACER	ENTRETOISE	DISTANZSTsCK	DISTANZSTsCK
31	F01420036	ROS.M6 6,4X 18X 2 U6593 ZN	FLAT WASHER 6-6X 18X2 6593 ZN	ROND. PLATE 6-6X 18X2 6593 ZN	SCHEIBE 6-6X 18X2 6593 ZN	ARAND. PLANA 6-6X 18X2 6593 ZN
32	F01020403	VITE M 6X 1X 16 U5739 8.8 ZN	BOLT M 6X16	VIS M 6X16	SCHRAUBE M 6X16	TORNILLO M 6X16
33	F01200442	DADO M16X 1,5 U5589 6.8 ZN	NUT 16X1-5 UNI 5589 6.8 GALVAN	ECROU 16X1-5 UNI 5589 6.8 ZN	MUTTER 16X1-5 UNI 5589 6.8 ZN	TUERCA 16X1-5 UNI 5589 6.8 ZN
34	G15422361	SUPPORTO DISCHI	DISKS SUPPORT	SUPPORT DISQUES	SCHEIBENHALTERUNG	SOPORTES DISCOS
35	G15220540	DADO M16X1,5 SX	NUT M16X1-5 LEFT	ECROU M16X1-5 GCH	MUTTER M16X1-5 LI	TUERCA M16X1-5 IZQ
36	F01220033	DADO M10X 1,5 D980 8 ZN	NUT M10X 1,5 D980 8 ZB	ECRO.M10X 1,5 D980 8 ZB	MUTT.M10X 1,5 D980 8 ZB	TUER.M10X 1,5 D980 8 ZB
37	F01430023	ROS.M10 10,5X 18X0,9 U8842J ZN	WASHER D10 DIN 6798 D.INT.ZN	RONDELLE D10 DIN 6798 D. INT.	UNT. SCHEIBE D10 DIN 6798 D.IN	ARANDELA D10 DIN 6798 D.INT.ZN
38	G15420713	LAMIERE FALCIONE MAIS SP540	MAIZE COULTER SHEET SP540	TÈLES SOC MA¤S SP540	BLECHE S-SCHAR MAIS SP540	CHAPAS BOTA MA-Z SP540
39	G18902481	MOLLA TRAZIONE AGG.FALCIONE	COULTER HOOK-UP TRACT. SPRING	RESSORT TRACTION FIX. SOC	ZUGFEDER KUPPL. SÄSCHAR	MUELLE TRACCIÓN CONEX. BOTA
40	G22270428	GANCIO TAGLIENTE SP/S	HOOK - CUTTER SP/S	CROCHET HACHOIR SP/S	HAKEN SZSCHAR SP/S	GANCHO GUADA¾ADORA SP/S
41	G22270397	TAGLIENTE FALCIONE MAIS SP/S	CORN CUTTER EDGE SP/S	POINTE DE SOC MAIS SP520/540	SCHARSCHNEIDE MAIS SP/S	FILO DE CORTE. GUADA¾AD. MAIZ
42	F01020472	VITE M10X 1,5X25 U5739 8.8 ZN	BOLT 10X25 5739 8.G GALVANIZED	VIS 10X25 5739 8.G ZN	SCHRAUBE 10X25 5739 8.G ZN	TORNILLO 10X25 5739 8.G ZN
43	G15423390	PROLUNGA FALCIONE	COULTER EXTENSION	RALLONGE SOC	VERLÄNGERUNG SÄSCHAR	PROLONGACIÓN BOTA
44	G15225500	DISCO ASSOLC.PROTETTO COMPL.	COMPL. PROTECTED DISC COULTER	DISQUE DU SOC PROT+G+ COMPLET	GESCH_TZTE FURCHENFORMSCHEIBE	DISCO SURC.PROTEGIDO COMPL.
45	G15420852	ASS.SPIANATERRA	GROUND LEVELLER	CHASSE MOTTE SP540	EINHEIT ERDEBNER	APLANADORA DE TIERRA
46	G16620231	FALCIONE SEMINA PROFONDA	DEEP SEEDING COULTER	SOC SEMIS PROFOND	S-SCHAR TIEFE SAAT	BOTA SIEMBRA PROFUNDA
47	G13825091	DISCO ASSOLCATORE D.373	FURROW OPENER DISK D.373	DISQUE D. 373 6 T.D.6	SCHEIBE SZSCHARENREISSER D.373	DISCO SURCADOR D.373
48	G15226600	KIT X DISCO SUPER SEAL				
49	F01020479	VITE M10X 1,5X35 U5739 8.8 ZN	BOLT M 10X35	VIS M 10X35	SCHRAUBE M 10X35	TORNILLO M 10X35
50	F01200416	DADO M10X 1,5 U5589 6S ZN	NUT 10 UNI5589 6.8 GALVANIZED	ECROU 10 UNI 5589 6.8 ZN	MUTTER 10 UNI 5589 6.8 ZN	TUERCA 10 UNI 5589 6.8 ZN
51	G16620240	SUPPORTO FALCIONE ARACHIDI	SUPPORT PEANUT CUTTER	SUPPORT HACHOIR ARACHIDES	HALTERUNG SZSCHAR ERDN_SSE	SOPORTE GUADA¥ADORA CACAHUETE
52	G16620260	FALCIONE ARACHIDI COMPL.SP540	COMPL. PEANUT COULTER SP540	HACHOIR ARACHIDES COMPL.SP540	S-SCHAR ERDN_SSE KOMPL.SP540	BOTA CACAHUETES COMPL. SP540
53	G16620181	SUPPORTO FALCIONE SEMINA PROF.	CUTTER SUPPORT ASS. DEEP SEEDI	SUPPORT DE SOC SEMIS PROFOND	HALTERUNG SZSCHAR TIEFE AUSSA	CONJ. SOPORTE GUAD. SIEMBRA PR
54	G16620220	GANCIO TAGLIENTE SEM.PROFONDA	HOOK - CUTTER DEEP SEEDING	CROCHET HACHOIR SEMIS PROFOND	HAKEN SZSCHAR TIEFE AUSSAAT	GANCHO FILO DE CORTE SIEMBRA P
55	F01020481	VITE M10X 1,5X40 U5739 8.8 ZN	BOLT 10X40 5739 8.G GALVANIZED	VIS 10X40 5739 8.G ZN	SCHRAUBE 10X40 5739 8.G ZN	TORNILLO 10X40 5739 8.G ZN
56	G15420735	MONT.FALCIONE MAIS SP99				
57	G15225240	ESTRATTORE DISCHI ELEMENTO MT	SEED PLATE EXTRACTOR ELEM. MT	EXTRACTEUR DISQUE ELEMENT MT	SCHEIBENAUSZIEHER ELEMENT MT	EXTRACTOR DISCOS ELEMENTO MT
58	G15223651	SUPPORTO CUSCINETTO DISCO	DISK BEARING SUPPORT	SUPPORT PALIER DISQUE	SCHEIBENLAGERBsCHSE	SOPORTE COJINETE DISCO
59	F04010084	CUSC.D17D47 B22,2 3303 LLU/DDU	BEARING 3303 2RS	PALIER 3303 2RS	LAGER 3303 2RS	COJINETE 3303 2RS
60	F03011075	AN. TENUTA B1OF 24X32X4	SEALING RING G24X32X4	BAGUE D'ETANCHEITE G24X32X4	DICHTRING G24X32X4	ANILLO AISLADOR G24X32X4

TAV. 103

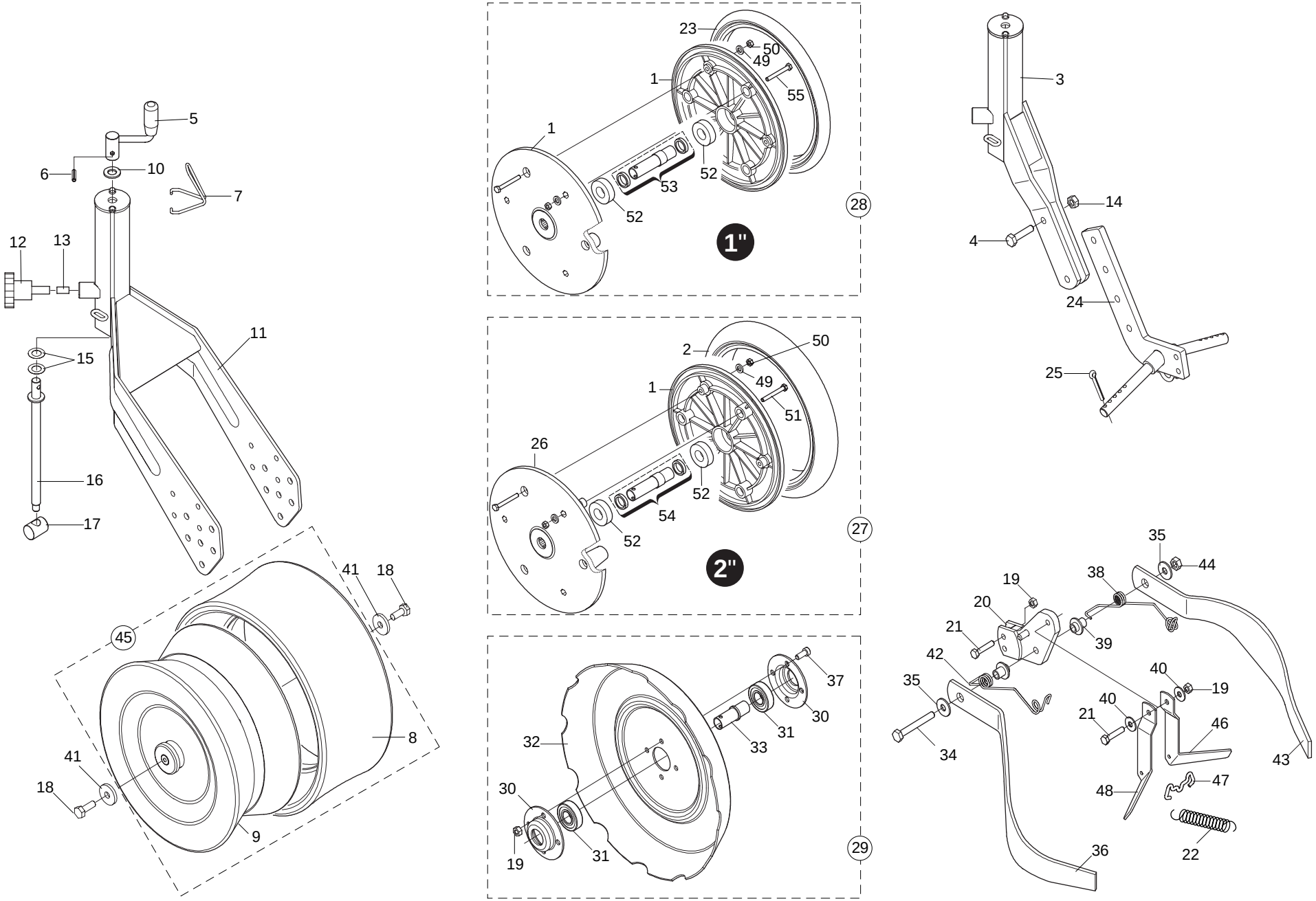

GASPARDO

RUOTE DI COMPRESSIONE

TAV. 103

Pos.	Cod.	Descrizione	Description	Description	Benennung	Descripcion
1	F06120146	SEMICERCHIO PLA RUOTA 1"	PLASTIC HALF RIM 1' WHEEL	DEMI-JANTE PLAST. ROUE 1"	HALBFELGE PLA RAD 1"	SEMIARO PL-ST.RUEDA 1"
2	F06120165	COPERTURA 2' X 13'	RUBBER RING 2X13'	COUVERT FARMF ROUE COMPR 2"X13	MANTEL 2' X 13'	CUBIERTA 2' X 13'
3	G15420913	SUPPORTO RUOTE A V	V-WHEEL SUPPORT	SUPPORT ROUES EN V	V RADER HALTERUNG	SOPORTE RUEDAS A V
4	F01020481	VITE M10X 1,5X40 U5739 8.8 ZN	BOLT 10X40 5739 8.G GALVANIZED	VIS 10X40 5739 8.G ZN	SCHRAUBE 10X40 5739 8.G ZN	TORNILLO 10X40 5739 8.G ZN
5	G22270235	MANIGLIA REGOLAZIONE B4	ADJUSTMENT HANDLE B4	POIGNEE REGLAGE B4	EINSTELLGRIFF B4	MANIJA REGULACIN B4 M
6	F02100109	SPINA E.P. 6X 24 U6873 C70 BR	PIN EL. .6 X24 DIN 1481	FICHE EL. 6 X24 DIN 1481	SPANNSTIFT 6 X24 DIN 1481	CLAVIJA EL.6 X24 DIN 1481
7	G65336100	MOLLA SPEC.FERMO MANIGLIA SP	SPEC SPRING HANDLE STOP SP	RESSORT SPEC. ARRET POIGNEE SP	SPEZIALFEDER GRIFFSPERRE SP	MUELLE ESPEC. BLOQUEO MANIJA S
8	F06120155	COPERTURA FARMF.370X165 'A'	COVERING FARMF.370X165 'A'	COUVERTURE FARMF. 370X165 'A'	MANTEL FARMF.370X165 'A'	CUBIERTA FARMF.370X165 'A'
9	F06120022	CERCHIO FARMF.370X165 COMPL.	FARMFLEX RING 370X165 ASSY.	JANTE FARMF. 370X165 COMPL.	REIFEN FARMF.370X165 KOMPL.	LLANTA FARMF.370X165 COMPL.
10	F01410088	ROS.M14 15X 28X2,5 U6592 ZN	WAS.M14 15X 28X2,5 U6592 ZB	RON.M14 15X 28X2,5 U6592 ZB	SCH.M14 15X 28X2,5 U6592 ZB	ARA.M14 15X 28X2,5 U6592 ZB
11	G16620430	SUPPORTO RUOTE				
12	F06220013	VOLANT.8L.PERN.M12X30-40 VPA55	8-LOBE PIN HANDWHEEL M12X30-40	VOLANT 8 LOBES PIVOT M12X30-40	HANDRAD.8L.ZAPFENM12X30-40 VPA	VOLDEL.8L.PERN.M12X30-40 VPA55
13	G14820991	FERMO REGOLAZIONE	ADJUSTMENT STOP	BUTEE REGLAGE	EINSTELLUNGSSPERRE	BLOQUEO REGULACIËN
14	F01200270	DADO M10X 1,5 U5588 6.8 ZN	NUT M10	ECROU M10	MUTTER M10	DADO M10
15	G22220073	RONDELLA 28X0,3X16,5	WASHER 28X0-3X16-5	RONDELLE 28X0-3X16-5	UNTERLEGSCHEIBE 28X0-3X16-5	ARANDELA 28X0-3X16-5
16	G22230062	VITE DI REGOLAZIONE	ADJUSTMENT BOLT	VIS DE REGLAGE	EINSTELLSCHRAUBE	TORNILLO DE REGULACIN S
17	G22230063	ELEMENTO ARTICOLATO	ARTICULATED ELEMENT	ELEMENT ARTICULE	GELENKELEMENT	ELEMENTO ARTICULADO
18	F01020476	VITE M10X 1,5X30 U5739 8.8 ZN	BOLT M 10X30	VIS M 10X30	SCHRAUBE M 10X30	TORNILLO M 10X30
19	F01220022	DADO M 8X1,25 D980 8 ZN	SELF LOCKING NUT M8X1,25 980V	ECROU AUTOBL. M8X1,25 980-V	SELBSTSP.MUTT. M8X1,25 980-V	DADO AUTOBL. M8X1,25 980-V
20	G15423460	ATTACCO COPRISEME RASCHIATERRA	SOIL SCRAPER SEED COV.LINKAGE	FIXATION COUVRE-GRAINES RACLEU	KUPPLUNG SAMENABDEC.ERDSCHABER	CONEXIÓN CUBRESEM.RASCADOR TI.
21	F01020449	VITE M 8X1,25X35 U5739 8.8 ZN	BOLT M 8X35	VIS M 8X35	SCHRAUBE M 8X35	TORNILLO M 8X35
22	G65337028	MOLLA TRAZ.ZN SUPP.RUOTA SV	TRACTION SPRING ZN WHEEL SUPP.	RESSORT TRACT. ZN SUPPORT ROUE	ZUGFEDER ZN RADHALTERUNG SV	MUELLE TRAC. ZN SOPORTE RUEDA
23	F06120181	ANELLO IN GOMMA 1 POLLICE MT	RUBBER RING 1X12'	COUVERT FARMF ROUE COMPR 1"X12	MANTEL FARMF.R.DRUCK .MT	CUBIERTA FARMF. R. COMPR. MT
24	G15423840	REGOLAZIONE RUOTE	WHEEL ADJUSTMENT	REGLAGE ROUES	RADEINSTELLUNG	REGULACIÓN RUEDAS
25	F02200227	COPIGLIA 5X 30 U1336 ZN	SPLIT PIN 5 X30 1336 GALVAN.	GOUPILLE 5 X30 1336 ZN	SPLINT 5 X30 1336 ZN	PASADOR 5 X30 1336 ZN
26	F06120147	SEMICERCHIO PLA RUOTA 2"	PLASTIC HALF RIM 2' WHEEL	DEMI-JANTE PLAST. ROUE 2"	HALBFELGE PLA RAD 2"	SEMIARO PL-ST.RUEDA 2"
27	F06120075	RUOTA DA 2 POLLICI MT	RUBBER WHEEL 2'X13' PLA.2 BEAR	ROUE CAOUTCHOUTEE	GUMMIRAD	RUEDA DE CAUCHO
28	F06120076	RUOTA DA 1 POLLICE MT	RUBBER WHEEL 1'X12' PLA.2 BEAR	ROUE CAOUTCHOUTEE	GUMMIRAD	RUEDA DE CAUCHO
29	G15423860	RUOTA POSTERIORE COMPL.	REAR WHEEL ASSY	ROUE POSTERIEURE COMPL.	HINTERES RAD KOMPLETT	RUEDA TRASERA COMPL.
30	G16242190	SUPPORTO CUSCINETTO	BEARING SUPPORT	SUPPORT PALIER	LAGERBsCHSE	SOPORTE COJINETE
31	F04010165	CUSC.D20 D47 B14 6204,2RSC3	BEARING 6204 2RS	PALIER 6204 2RS	LAGER 6204 2RS	COJINETE 6204 2RS
32	G14820871	RUOTA POSTERIORE FERRO	REAR IRON WHEEL	ROUE ARRIERE FER	EISENHINTERRAD	RUEDA TRAS. HIERRO
33	G15423850	BOCCOLA RUOTA FERRO	STEEL WHEEL BUSH	DOUILLE ROUE FER	BÜCHSE EISENRAD	BUJE RUEDA DE HIERRO
34	F01020128	VITE M10X 1,5X80 U5737 8.8 ZN				
35	F01420060	ROS.M10 10,5X 30X2,5 U6593 ZN	WASHER 10,5X30	RONDELLE 10,5X30	SCHEIBE 10,5X30	ARANDELA 10,5X30
36	G10120621	COPRISEME SX	LEFT SEED COVER	COUVRE-GRAINES GHT.	LINKER SAMENABDECKER	CUBRESEMILLA IZQ.
37	F01040091	VITE M 8X1,25X20 U5931 8.8 ZN	SCREW 8 X20 5931 8.G ZN	VIS 8 X20 5931 8.G ZN	SCHRAUBE 8 X20 5931 8.G ZN	TORNILLO 8 X20 5931 8.G ZN
38	G18902910	MOLLA COPRISEME DX SP	RIGHT SEED COVER SPRING SP	RESSORT COUVRE-GRAINE DRT SP	FEDER SAMENABDECKER RE SP	MUELLE CUBRESEMILLAS DER SP
39	G15422500	BOCCOLA SUPP.MOLLA COPRISEMI	SEED COVER SPRING SUPPORT BUSH	BOITE SUPP. RESSORT COUVRE-GR.	BsCHSE HALTERUNG FEDERSAMENABD	CASQUILLO SUPER.MUELLE CUBRESE
40	F01420048	ROS.M8 8,4X 24X 2 U6593 ZN	PLANE WASHER D.8	RONDELLE D.8	SCHEIBE D.8	ARANDELA D.8
41	G18701140	RONDELLA 11 X35 X5	WASHER 11 X 35 X 5	RONDELLE 11 X35 X5	UNTERLEGSCHEIBE 11 X35 X5	ARANDELA 11 X35 X5
42	G18902920	MOLLA COPRISEME SX SP	LEFT SEED COVER SPRING SP	RESSORT COUVRE-GRAINE GCH SP	FEDER SAMENABDECKER LI SP	MUELLE CUBRESEMILLAS IZQ SP
43	G10120611	COPRISEME DX	RIGHT SEED COVER	COUVRE-GRAINES DRT.	RECHTER SAMENABDECKER	CUBRESEMILLA DER.
44	F01220033	DADO M10X 1,5 D980 8 ZN	NUT M10X 1,5 D980 8 ZB	ECRO.M10X 1,5 D980 8 ZB	MUTT.M10X 1,5 D980 8 ZB	TUER.M10X 1,5 D980 8 ZB
45	G14821590	RUOTA FARMFLEX 370X165 PROF.A	FARMFLEX WHEEL 370X165 DEPTH.A	ROUE FARMFLEX 370X165 PROF.A	RAD FARMFLEX 370X165PROF.A	RUEDA FARMFLEX
46	G15422481	RASCHIATERRA DX RUOTE A V	RIGHT 'V' WHEEL SOIL SCRAPER	RACLEUR DRT ROUES EN 'V'	ERDSCHABER RE 'V'-FTRMIGE RZDE	RASCADOR TIERRA DER RUEDAS EN
47	G18902930	AGGANCIO RASCHIATERRA	SOIL SCRAPER HOOK	ATTELAGE RACLEUR	KUPPLUNG ERDSCHABER	ENGANCHE RASCADOR TIERRA
48	G15422491	RASCHIATERRA SX RUOTE A V	LEFT 'V' WHEEL SOIL SCRAPER	RACLEUR GCH ROUES EN 'V'	ERDSCHABER LI 'V'-FTRMIGE RZDE	RASCADOR TIERRA IZQ RUEDAS EN
49	F01410037	ROS.M6 6,4X12,5X1,6 U6592 ZN	PLANE WASHER D.6	RONDELLE D.6	SCHEIBE D.6	ARANDELA D.6
50	F01230022	DADO M 6X 1 D982 8 ZN	NORM.SELF-LOCKING NUT 6 GALVAN	ECROU AUTOB.NOR.6 ZN	SELBSTSP. MUTTER NOR.6 ZN	TUERCA AUTOB. NOR. 6 ZN
51	F01020042	VITE M 6X 1X 50 U5737 8.8 ZN	BOL.M 6X 1X 50 U5737 8.8 ZG	VIS 6 X50 5737 8.G ZN	SCHRAUBE 6 X50 5737 8.G ZN	TORNILLO 6x50 5737 8.G ZN
52	F04010131	CUSC.D20 D42 B12 6004-2RSH EX>	BEARING 6004 2RS EX. SKF	ROULEMENT 6004	LAGER 6004	COJINETE 6004
53	G15226610	KIT DIST./GUARNIZIONI RUOTA V1				
54	G15226620	KIT DIST./GUARNIZIONI RUOTA V2				
55	F01020406	VITE M 6X 1X 25 U5739 8.8 ZN	BOLT M 6X25	VIS M 6X25	SCHRAUBE M 6X25	TORNILLO M 6X25

TAV. 112

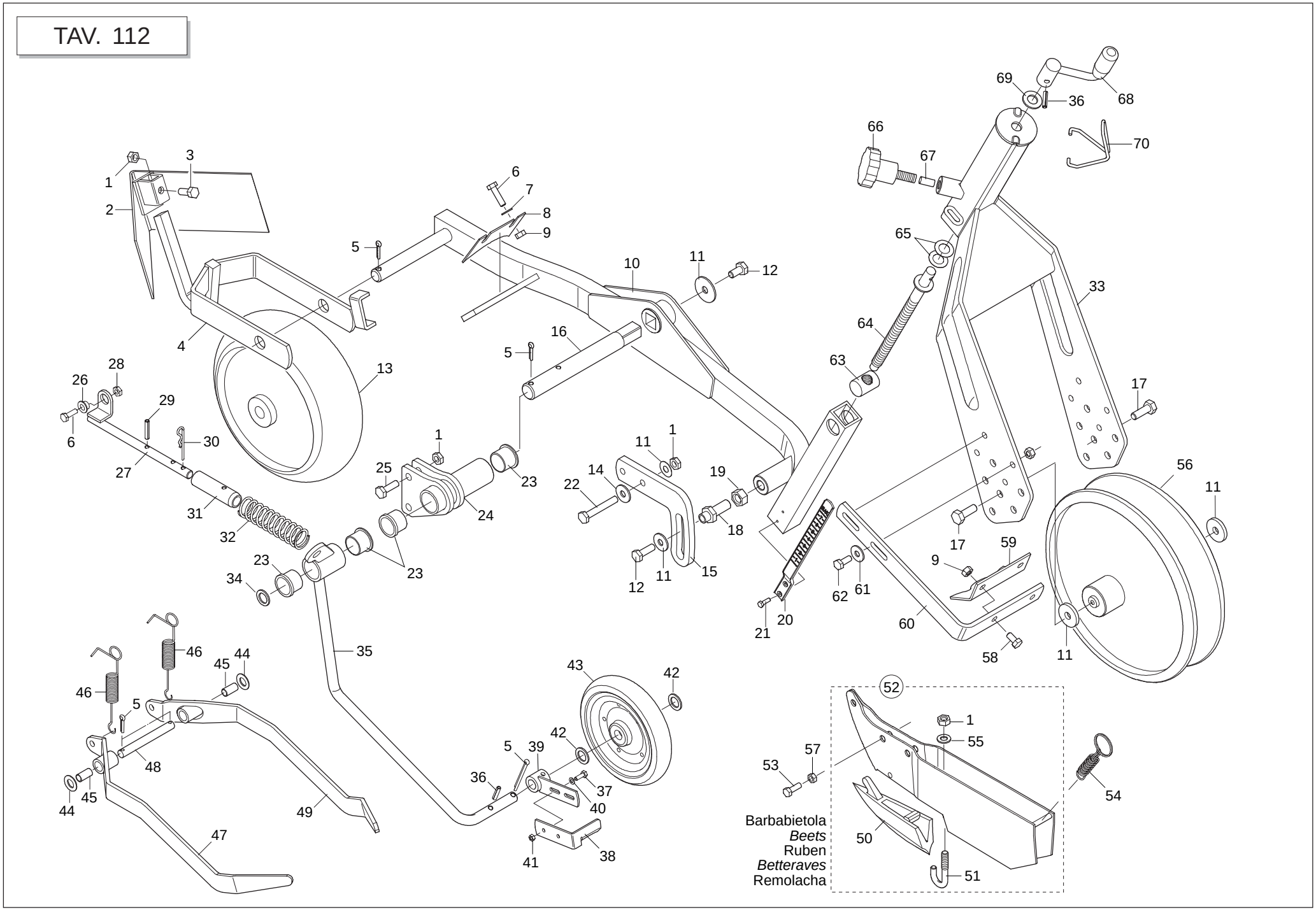

GASPARDO

BILANCIERE

TAV. 112

Pos.	Cod.	Descrizione	Description	Description	Benennung	Descripcion
1	F01200270	DADO M10X 1,5 U5588 6.8 ZN	NUT M10	ECROU M10	MUTTER M10	DADO M10
2	G22270241	SPARTIZOLLE BILANCIERE B4	SOD-BREAKER ROCKERS B4	ECARTEUR DE MOTTES BALANCIER B	KIPPHEBEL KLOTENRZUMER B4	DIVISOR DE TERRONES BALANCN BS
3	F01020472	VITE M10X 1,5X25 U5739 8.8 ZN	BOLT 10X25 5739 8.G GALVANIZED	VIS 10X25 5739 8.G ZN	SCHRAUBE 10X25 5739 8.G ZN	TORNILLO 10X25 5739 8.G ZN
4	G15422672	SUPPORTO RUOTA COMPRESSIONE	COMPRESS. WHEEL SUPPORT	SUPPORT ROUE DE COMPRESSION	HALTERUNG KOMPRESSIONSRAD	SOPORTE RUEDA DE COMPRESION
5	F02200246	COPIGLIA 6X 45 U1336 ZN	SPLIT PIN 6 X45 1336 GALVAN.	GOUPILLE 6 X45 1336 ZN	SPLINT 6 X45 1336 ZN	PASADOR 6 X45 1336 ZN
6	F01020440	VITE M 8X1,25X25 U5739 8.8 ZN	BOLT M8 X25 5739 8.8 ZN	VIS M8 X25 5739 8.8 ZN	SCHRAUBE M8 X25 5739 8.8 ZN	TORNILLO M8 X25 5739 8.8 ZN
7	F01410051	ROS.M8 8,4X 17X1,6 U6592 ZN	PLANE WASHER D.8	RONDELLE D.8	SCHEIBE D.8	ARANDELA D.8
8	G15420510	RASCHIATERRA BILANCIERE	SOIL SCRAPER ROCKER	RACLEUR BALANCIER	ERDSCHABER KIPPHEBEL	RASCADOR TIERRA BALANCN R
9	F01200244	DADO M 8X1,25 U5588 6.8 ZN	NUT M8	ECROU M8	MUTTER M8	DADO M8
10	G16620440	BILANCIERE	ROCKER	BALANCIER	KIPPHEBEL	KIPPHEBEL
11	G18701140	RONDELLA 11 X35 X5	WASHER 11 X 35 X 5	RONDELLE 11 X35 X5	UNTERLEGSCHEIBE 11 X35 X5	ARANDELA 11 X35 X5
12	F01020470	VITE M10X 1,5X20 U5739 8.8 ZN	BOLT M 10X20	VIS M 10X20	SCHRAUBE M 10X20	TORNILLO M 10X20
13	G15420490	RUOTINO ANT.BILANC.D.280	FRONT ROCKER WHEEL D.280	ROUET ANT. BALANC. D 260	KLEINES VORD. RAD KIPPHEBEL D.	RUEDECILLA DEL. BALANCN D.280R
14	F01420060	ROS.M10 10,5X 30X2,5 U6593 ZN	WASHER 10,5X30	RONDELLE 10,5X30	SCHEIBE 10,5X30	ARANDELA 10,5X30
15	G15423251	PIASTRA DI REGOLAZIONE	ADJUSTING PLATE	PLAQUE DE REGLAGE	EINSTELLPLATTE	PLACA DE REGULACIÓN
16	G15422572	ASSE BILANCIERE	ROCKER SPINDLE	AXE BALANCIER	KIPPHEBELACHSE	EJE BALANC
17	F01020476	VITE M10X 1,5X30 U5739 8.8 ZN	BOLT M 10X30	VIS M 10X30	SCHRAUBE M 10X30	TORNILLO M 10X30
18	G15423521	VITE REGOLAZIONE ZN	ADJUSTING SCREW - GALVANIZED	VIS RÉGLAGE ZN	STELLSCHRAUBE ZN	TORNILLO REGULACIÓN ZN
19	F01200432	DADO M14X 1,5 U5589 6S ZN	NUT M14X1.5	ECROU M14X1.5	MUTTER M14X1.5	DADO M14X1.5
20	G19003400	ASTA INDICAZIONE PROFONDITA'	DEPTH INDICATING ROD	TIGE INDICATION PROFONDEUR	TIEFENANZEIGESTAB	VARILLA INDICACIÓN PROFUNDIDAD
21	F02250077	RIVETTO STR. 3X 14 U9200A AL	3X14 ALUMINIUM PULL RIVET	RIVET A RUPTURE 3X14 ALUMINIUM	REISSNIETE3X14 ALL.	REMACHE DESGAR. 3X14 ALL.
22	F01020122	VITE 10X 1,5X 70 U5737 8.8 ZN	BOLT 10X 1,5X 70 U5737 8.8 ZB	VIS 10X 1,5X 70 U5737 8.8 ZB	SCHR.10X 1,5X 70 U5737 8.8 ZB	TORN.10X 1,5X 70 U5737 8.8 ZB
23	G66349003	BOCCOLA SINT.	BUSHING- SINTERED	BOITE FRITTEE	SYNTH. BUECHSE	CASQUILLO SINT.
24	G15423680	SUPPORTO BILANCIERE SP540	ROCKERS SUPPORT SP540	SUPPORT BALANCIER SP540	EINHEIT KIPPHEBEL SP540	SOP. BALANC N SP540
25	F01020110	VITE M10X 1,5X40 U5737 8.8 ZN	BOLT 10X40 5737 8.G GALVANIZED	VIS 10X40 5737 8.G ZN	SCHRAUBE 10X40 5737 8.G ZN	TORNILLO 10X40 5737 8.G ZN
26	G22250398	BOCCOLA BRACCIO SUPERIORE SV/2	UPPER ARM BUSHING SV/2	BOITE BRAS SUP. SV/2	BsCHSE OBERARM SV/2	CASQUILLO BRAZO SUPERIOR SV/2
27	G15423810	SUPPORTO MOLLA	SPRING SUPPORT	SUPPORT RESSORT	FEDERHALTERUNG	SOPORTE MUELLE
28	F01220022	DADO M 8X1,25 D980 8 ZN	SELF LOCKING NUT M8X1,25 980V	ECROU AUTOBL. M8X1,25 980-V	SELBSTSP.MUTT. M8X1,25 980-V	DADO AUTOBL. M8X1,25 980-V
29	F02100087	SPINA E.P. 5X 30 U6873 C70 BR	PIN EL. 5 X30 DIN 1481	FICHE EL. 5 X30 DIN 1481	SPANNSTIFT 5 X30 DIN 1481	CLAVIJA EL.5 X30 DIN 1481
30	F02200363	COPIGLIA R 3X 62 ZN	SPLIT PIN R 3X62	GOUPILLE R 3X62	SPLINT R 3X62	CHAVETA R 3X62
31	G15423820	BOCCOLA NYLON SUPPORTO MOLLA	SPRING-SUPPORTING NYLON BUSH	DOUILLE NYLON SUPPORT RESSORT	NYLONBÜCHSE FEDERHALTERUNG	BUJE NYLON SOPORTE MUELLE
32	G18903670	MOLLA COMPRESSIONE RUOTINO	COMPR. WHEEL SPRING	RESSORT COMPRESSION ROUET	FEDER DsNGUNG ROLLE	MUELLE COMPRESIN RUEDECILLA A
33	G16620430	SUPPORTO RUOTE				
34	G18701590	RONDELLA 25X35X2,5 ZN	WASHER 25 x 35 x2,5 ZB	RONDELLE 25 x 35 x2,5 ZB	UNTERLEGSCHEIBE 25 x 35 x2,5	ARANDELA 25 x 35 x2,5 ZB
35	G15423780	SUPPORTO RUOTINO	WHEEL SUPPORT	SUPPORT ROUET	HALTERUNG ROLLE	SOPORTE RUEDECILLA
36	F02100109	SPINA E.P. 6X 24 U6873 C70 BR	PIN EL. .6 X24 DIN 1481	FICHE EL. 6 X24 DIN 1481	SPANNSTIFT 6 X24 DIN 1481	CLAVIJA EL.6 X24 DIN 1481
37	F01020378	VITE M5X 0,8X 16 U5739 8.8 ZN	BOLT 5X16 5739 8.G GALVANIZED	VIS 5X16 5739 8.G ZN	SCHRAUBE 5X16 5739 8.G ZN	TORNILLO 5X16 5739 8.G ZN
38	G15423271	RASCHIATERRA	SOIL SCRAPER	RACLEUR	ERDSCHABER	RASCADOR TIERRA
39	G15421671	SUPPORTO RASCHIATERRA	SOIL SCRAPER SUPPORT	SUPPORT RACLEUR	HALTERUNG ERDSCHABER	SOPORTE RASCADOR TIERRA
40	F01420022	ROS.M5 5,5X 10X 1 U6593 ZG	WASHER M5 5,5X10X1 U6593 ZG	RONDELLE M5 5,5X10X1 U6593 ZG	SCHEIBE M5 5,5X10X1 U6593 ZG	ARANDELA M5 5,5X10X1 U6593 ZG
41	F01200220	DADO M 5X 0,8 U5588 6.8 ZN	NUT 5 UNI 5588 6.8 GALVANIZED	ECROU 5 UNI 5588 6.8 ZN	MUTTER 5 UNI 5588 6.8 ZN	TUERCA 5 UNI 5588 6.8 ZN
42	G20970025	RONDELLA 25,2X2X16,5	WASHER 25-2X2X16-5	RONDELLE 25-2X2X16-5	UNTERLEGSCHEIBE 25-2X2X16-5	ARANDELA 25-2X2X16-5
43	F06120066	RUOTINO FLEX 170 X 30	FLEX WHEEL 170 X 30	ROUET FLEX 170 X 30	ROLLE FLEX 170 X 30	RUEDECILLA FLEX 170 X 30
44	G18701820	RONDELLA 16,5X25X1,0 ZN	WASHER 16.5 X 25 X 1- GALVAN.	RONDELLE 16,5 X25 X1 ZN	UNTERLEGSCHEIBE 16,5 X25 X1 ZN	ARANDELA 16,5 X25 X1 ZN
45	F04150024	BOCCOLA PAP 15X17X25	PAP BUSH 15X17X25	BOITE PAP 15X17X25	BsCHSE PAP 15X17X25	CASQUILLO PAP 15X17X25
46	G18903170	MOLLA TRAZ.ZN RASCHIAT. SP530	TRACTION SPRING ZN SCRAPER SP5	RESSORT TRACT. ZN RACLEUR SP53	ZUGFEDER ZN ABSCHABER SP530	MUELLE TRAC. ZN RASCADOR SP530
47	G16620720	COPRISEME BIETOLE SX				
48	G15421080	ASSE COPRISEME ZN	SEED COVER SPINDLE ZN	AXE COUVRE-GRAINES	SAMENDECKACHSE ZN	EJE CUBRESEMILLA ZN
49	G16620710	COPRISEME BIETOLE DX				
50	G22270226	TAGLIENTE FALCIONE B4 SP/S	KNIFE COULTER SUGAR BEET SP	POINTE DE SOC BETT SP520/540	SCHARSPITZE RUBE SP	PONTA SURCADOR REMOLACHA SP
51	G22270428	GANCIO TAGLIENTE SP/S	HOOK - CUTTER SP/S	CROCHET HACHOIR SP/S	HAKEN SZSCHAR SP/S	GANCHO GUADA¾ADORA SP/S
52	G15422474	MONT.FALCIONE BIETOLE H118				
53	F01020479	VITE M10X 1,5X35 U5739 8.8 ZN	BOLT M 10X35	VIS M 10X35	SCHRAUBE M 10X35	TORNILLO M 10X35
54	G18902481	MOLLA TRAZIONE AGG.FALCIONE	COULTER HOOK-UP TRACT. SPRING	RESSORT TRACTION FIX. SOC	ZUGFEDER KUPPL. SÄSCHAR	MUELLE TRACCIÓN CONEX. BOTA

TAV. 112

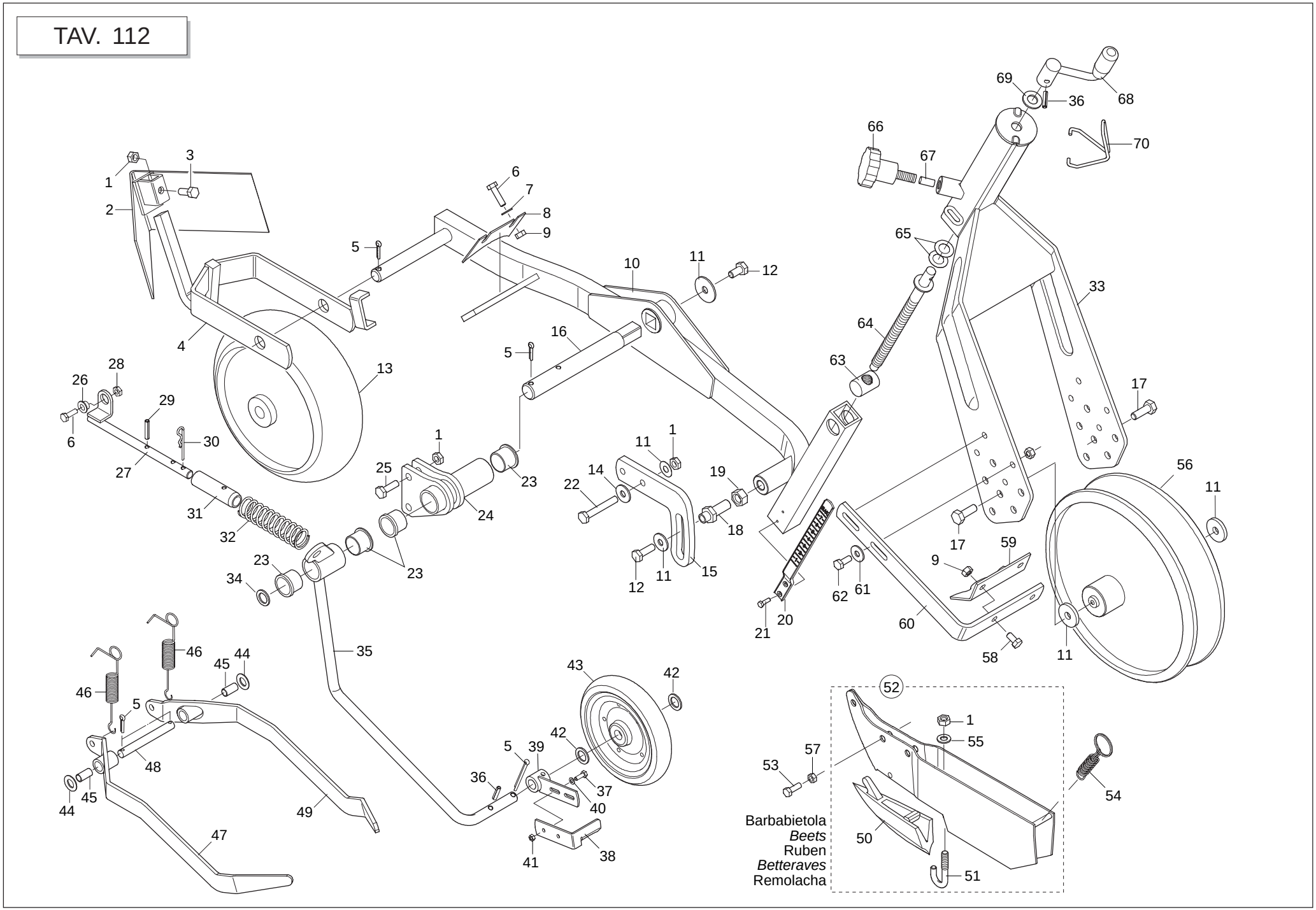

GASPARDO

BILANCIERE

TAV. 112

Pos.	Cod.	Descrizione	Description	Description	Benennung	Descripcion
55	F01430023	ROS.M10 10,5X 18X0,9 U8842J ZN	WASHER D10 DIN 6798 D.INT.ZN	RONDELLE D10 DIN 6798 D. INT.	UNT. SCHEIBE D10 DIN 6798 D.IN	ARANDELA D10 DIN 6798 D.INT.ZN
56	G15421240	RUOTA 290X80 FLEX	FLEX -BRASILE' WHEEL 290X80	ROUE 290X80 FLEX 'BRASILE'	RAD 290X80 FLEX 'BRASILE'	RUEDA 290X80 FLEX 'BRASILE'
57	F01220033	DADO M10X 1,5 D980 8 ZN	NUT M10X 1,5 D980 8 ZB	ECRO.M10X 1,5 D980 8 ZB	MUTT.M10X 1,5 D980 8 ZB	TUER.M10X 1,5 D980 8 ZB
58	F01020432	VITE M 8X1,25X16 U5739 8.8 ZN	BOLT M 8X16	VIS M 8X16	SCHRAUBE M 8X16	TORNILLO M 8X16
59	G15421030	RASCHIATERRA RUOTA POSTERIORE	SOIL SCRAPER REAR WHEEL	RACLEUR ROUE POSTERIEURE	ERDSCHABER HINTERES RAD	RASCADOR TIERRA TRASERO
60	G15421022	SUPP.RASCHIATERRA RUOTA	SCRAPER SUPPORT WHEEL	SUPP. RACLEUR ROUES	HALTERUNG ERDSCHABER RADER	SOP.RASCADOR TIERRA RUEDAS
61	F01420048	ROS.M8 8,4X 24X 2 U6593 ZN	PLANE WASHER D.8	RONDELLE D.8	SCHEIBE D.8	ARANDELA D.8
62	F01020440	VITE M 8X1,25X25 U5739 8.8 ZN	BOLT M8 X25 5739 8.8 ZN	VIS M8 X25 5739 8.8 ZN	SCHRAUBE M8 X25 5739 8.8 ZN	TORNILLO M8 X25 5739 8.8 ZN
63	G22230063	ELEMENTO ARTICOLATO	ARTICULATED ELEMENT	ELEMENT ARTICULE	GELENKELEMENT	ELEMENTO ARTICULADO
64	G22230062	VITE DI REGOLAZIONE	ADJUSTMENT BOLT	VIS DE REGLAGE	EINSTELLSCHRAUBE	TORNILLO DE REGULACIN S
65	G22220073	RONDELLA 28X0,3X16,5	WASHER 28X0-3X16-5	RONDELLE 28X0-3X16-5	UNTERLEGSCHEIBE 28X0-3X16-5	ARANDELA 28X0-3X16-5
66	F06220013	VOLANT.8L.PERN.M12X30-40 VPA55	8-LOBE PIN HANDWHEEL M12X30-40	VOLANT 8 LOBES PIVOT M12X30-40	HANDRAD.8L.ZAPFENM12X30-40 VPA	VOLDEL.8L.PERN.M12X30-40 VPA55
67	G14820991	FERMO REGOLAZIONE	ADJUSTMENT STOP	BUTEE REGLAGE	EINSTELLUNGSSPERRE	BLOQUEO REGULACIËN
68	G22270235	MANIGLIA REGOLAZIONE B4	ADJUSTMENT HANDLE B4	POIGNEE REGLAGE B4	EINSTELLGRIFF B4	MANIJA REGULACIN B4 M
69	F01410088	ROS.M14 15X 28X2,5 U6592 ZN	WAS.M14 15X 28X2,5 U6592 ZB	RON.M14 15X 28X2,5 U6592 ZB	SCH.M14 15X 28X2,5 U6592 ZB	ARA.M14 15X 28X2,5 U6592 ZB
70	G65336100	MOLLA SPEC.FERMO MANIGLIA SP	SPEC SPRING HANDLE STOP SP	RESSORT SPEC. ARRET POIGNEE SP	SPEZIALFEDER GRIFFSPERRE SP	MUELLE ESPEC. BLOQUEO MANIJA S

TAV. 263

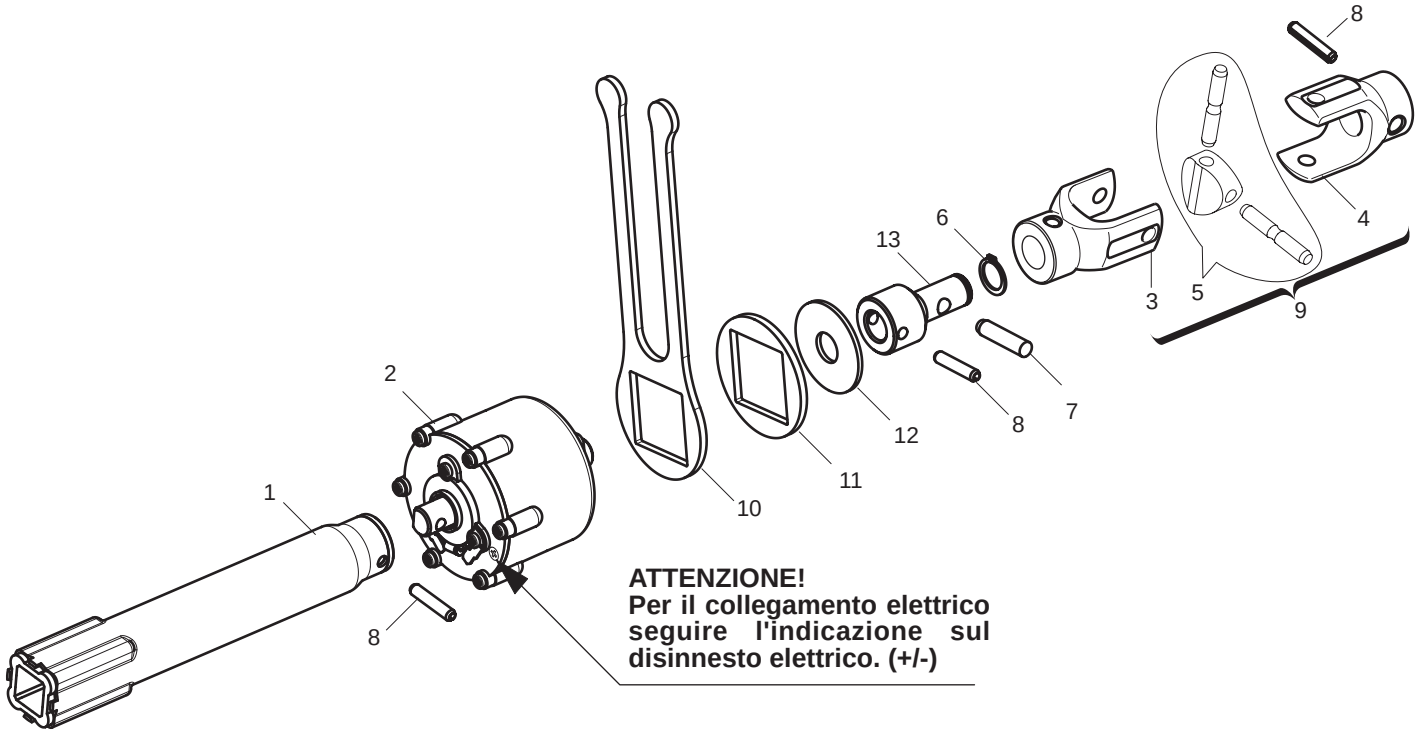

GASPARDO

ESCLUSIONE ELETTRICA FILE DI SEMINA

TAV. 263

Pos.	Cod.	Descrizione	Description	Description	Benennung	Descripcion
1	G15424011	INNESTO ESCL.ELETTRICA SP	ELECTRIC DISABLE CONNECTION SP	ACCOUPL. EXCL.+LECTRIQUE SP	STECKVORRICHT.ELEKT.AUSSCHALTU	CONECTOR DESC.EL+CTRICA SP
2	G16033701	DISINNESTO ELETTRICO 180 COMPL	COMPL. ELECTRIC RELEASE 180	D+BRAYAGE +LECTRIQUE 180 COMPL	ELEKTRISCHE ENTKUPPLUNG 180 KO	DESCONEXIËN EL+CTRICA 180 COMP
3	G19204080	FORCELLA				
4	G19204090	FORCELLA				
5	G22270454	CROCIERA COMPL. SP/S	SPIDER SP/S	CROSILLON COMPL CARDAN TRANSM	GELENKKREUZ KOMPL. SP/S	CRUCETA COMPL. SP/S
6	F02050045	ANELLO E. DE 16X 1 U7435 C70	SEEGER RING 16X 1 U7435 C70	BAGUE SEEGER 16 X 1 U7435 C70	SEEGERING 16 X 1 U7435 C70	ANILLO 16X 1 U7435 C70
7	F04150011	BOCCOLA AUTOL.40,5X30X5X33	SELF-LOCKING BUSHING 40-5X30X5	BOITE AUTOL. 40-5X30X5X33	BUCHSE SELBST. 40-5X30X5X33	CASQUILL0 AUTOL.40-5X30X5X33
8	F02100114	SPINA E.P. 6X 30 U6873 C70 BR	ELASTIC PIN 6X30	GOUJON ELASTIQUE 6X30	SPANNHUELSE 6X30	ESPINA ELASTICA 6X30
9	G15423980	FORCELLE SNODO ESCL.ELET.COMPL	FORK ELECTRIC DISABLE COMPLET	FOURCHETTE EXCL. +LECTR. COMPL	STAFEL ELEKT.AUSSCHALTU KOMPL.	HORQUILLA DESC.EL+CTRICA COMPL
10	G16033750	FERMO DISINNESTO ELETTRICO ZN	UNCOUPLING ELECTRIC STOP	ARRET DEBRAYAGE +LECT.	FESTSTELL. AUSKUPPLUNG EL.	BLOQUEO DESCONEXIN EL.
11	G16033740	DISTANZIALE DISINNESTO ELET.ZN	UNCOUPLING ELECTRIC SPACER	ENTRETOISE DEBRAYAGE +LECT.	DISTANZST_CK AUSKUPPLUNG EL.	DISTANCIADOR DESCONEXIN EL.
12	G18701970	RONDELLA 16X48X2,5	WASHER 16X48X2,5	RONDELLE 16X48X2,5	UNTERLEGSCHEIBE 16X48X2,5	ARANDELA 16X48X2,5
13	G16033730	ADATTATORE CROCIERA	SPIDER ADAPTOR	ADAPTATEUR CROISIERE	PASSST_CK GELENKKREUZ	ADAPTADOR CRUCETA

TAV. 125

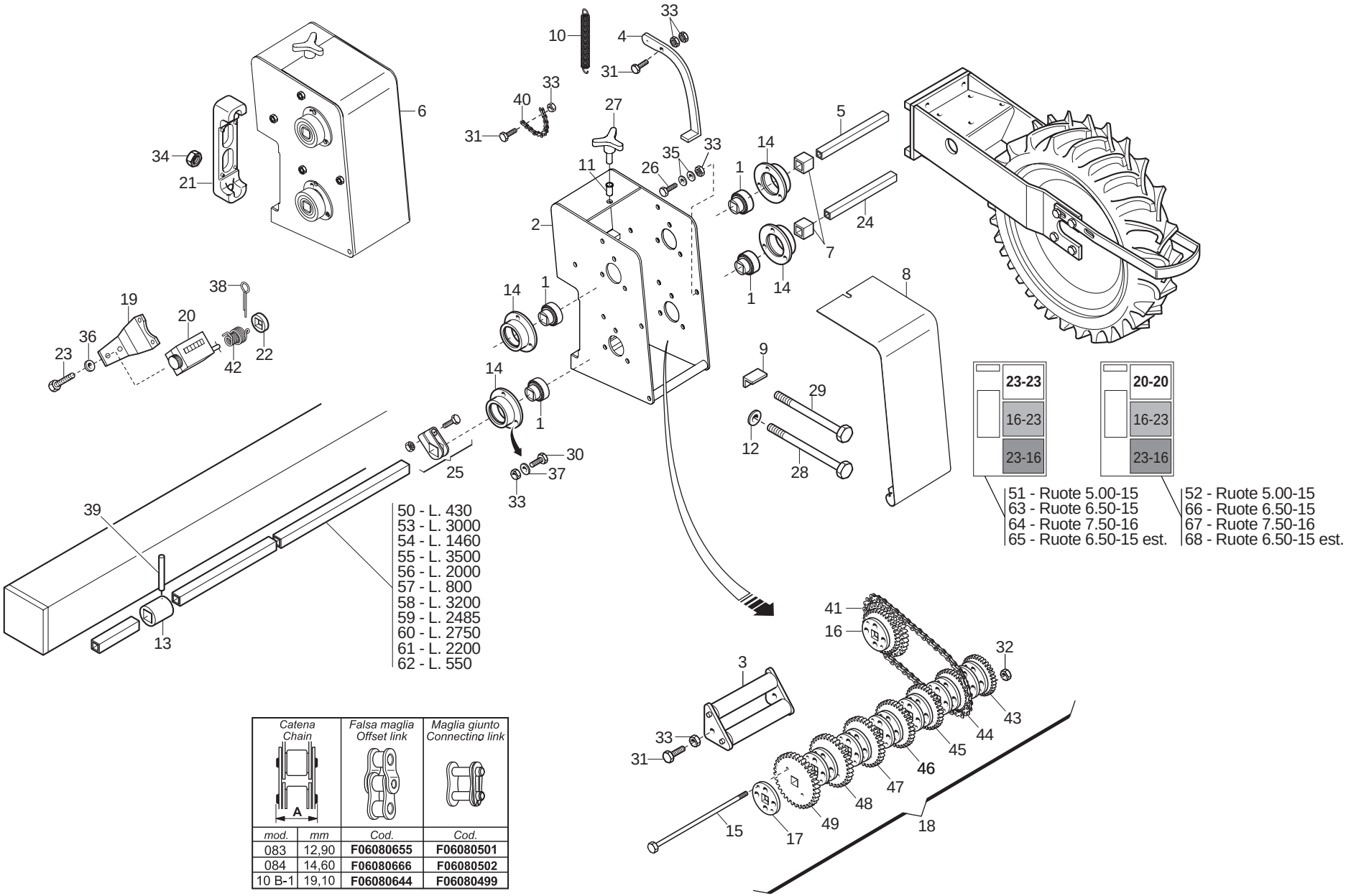

Catena Chain		Falsa maglia Offset link	Maglia giunto Connecting link
mod.	mm	Cod.	Cod.
083	12,90	**F06080655**	**F06080501**
084	14,60	**F06080666**	**F06080502**
10 B-1	19,10	**F06080644**	**F06080499**

CAMBIO

TAV. 125

Pos.	Cod.	Descrizione	Description	Description	Benennung	Descripcion
1	G14830390	CUSCINETTO FORO QUADRO	SQUARE-HOLED BEARING	ROULEMENT AL+SAGE CARR+	VIERKANTLAGER	COJINETE ORIFICIO CUADRADO
2	G16630840					
3	G15430321	RULLO TENDICATENA	CHAIN STRETCHER ROLLER	ROULEAU TENDEUR DE CHAINE	KETTENSPANNROLLE	RODILLO TENSOR DE CADENA
4	G15430331	LEVA CAMBIO	GEAR LEVER	LEVIER BOITE DE VITESSE	GETRIEBEHEBEL	PALANCA DE CAMBIO
5	G15430340	ASSE INGRANAGGI L.155	GEAR SPINDLE L.155	AXE ENGRENAGES L155	ACHSE ZAHNRZDER L.122	EJE ENGRANAJES L.155
6	G16630010	SCATOLA CAMBIO Q.150 COMPL.	GEARBOX 150	BOITE DE VITESSE 150	GETRIEBEKASTEN 150	CAJA DE CAMBIO DE VELOCIDAD 15
7	G15430501	DISTANZIALE INTERNO CAMBIO	GEARBOX INNER SPACER	ENTRETOISE INT. BOITE VITESSE	INNERES DISTANZSTsCK GETRIEBE	DISTANCIADOR INTERIOR CAMBIO
8	G15430711	COPERCHIO CAMBIO	GEAR COVER	COUVERCLE BOITE DE VITESSE	GETRIEBEDECKEL	TAPA CAMBIO
9	G15431020	FERMO VITE CAMBIO	GEAR SCREW STOP	ARRET VIS BOITE DE VITESSE	FESTSTELLVORRICH. GETRIEBESCHR	BLOQUEO TORNILLO
10	G18902970	MOLLA TRAZ.CAMBIO ZN SP	GALVAN. GEAR TRACT. SPRING SP	RESS. TRACT. BOITE VITESSE ZN	ZUGFEDER GETRIEBE ZN SP	MUELLE TRAC. CAMBIO ZN SP
11	F02250683	INSERTO FIL.M 8X17,5 ZN T.TOND	CYLINDRICAL NUT 8 TC 40	ECROU CYLINDRIQUE 8 TC 40	ZYLINDRISCHE MUTTER 8 TC 40	TUERCA CILINDRICA 8 TC 40
12	G18700690	RONDELLA 15 X40 X6 ZN	WASHER 15 X 40 X 6 ZN	RONDELLE 15 X40 X6 ZN	UNTERLEGSCHEIBE 15 X40 X6 ZN	ARANDELA 15 X40 X6 ZN
13	G22220085	SNODO	ARTICULATION	ARTICULATION	GELENK	ARTICULACIN A
14	G22230094	SUPPORTO CUSCINETTO	BEARING SUPPORT	SUPPORT PALIER	LAGERBsCHSE	SOPORTE COJINETE
15	G19203260	VITE M5X115 ZN	BOLT M5X115 ZN	VIS M5X115 ZN	SCHRAUBE M5X115 ZN	TORNILLO M5X115 ZN
16	G22270152	ING.Z 16-23 RUOTA-CAMBIO SP	WHEEL- GEARBOX GEARS SP	ENGR. Z 16-23 ROUE BOITE VIT.	ZAHNRAD Z 16-23 GETRIEBERAD SP	ENGRAN. Z 16-23 RUEDA-CAMBIO
17	G22270162	RINFORZO INGR.ASSE DA 20 SP	AXLE GEAR REINFORCEMENT 20 SP	RENFORC. ENGREN. AXE DE 20 SP	VERSTZRKUNG ACHSZAHNRAD 20 SP	REFUERZO ENGRAN. EJE DE 20 SP
18	G22270163	BLOCCO CAMBIO ASSE DA 20 SP	20 CM SPINDLE GEARBOX SP	ENSEMBLE BOITE DE VITESSE	GETRIEBEBLOCK ACHSE 20 SP	BLOQUE CAMBIO EJE DE 20 SP
19	G22270217	SUPP.CONTAETT. CAMB.35 SP LM	HECTARE COUNTER GEAR SUPPORT 3	SUPPORT COMPT. D'HECT. B. VIT.	HALT. GETRIEBE HEKTARZZHLER 35	SOPORTE CONTADOR HECT. CAMB.35
20	G22270218	CONTAETTARI TEN. STAG. SP LM	HECTARE COUNTER SEAL SP LM	COMPT. D'HECT. ETANCHE SP LM	HEKTARZZHLER DICHT SP LM	CUENTA HECTAREAS ESTANCO
21	G19204030	SCONTRO FISS.150 2F D15				
22	G66248218	RONDELLA DISTAN.SPAND.	MAN. SPR. SPACER WASHER	RONDELLE ENTRETOISE EP. ENGRAI	ABSTANDSCHEIBE DsNGERSTREUER	ARANDELA DISTAN.ABONAD.
23	F01040025	VITE M 4X 0,7X10 U5931 8.8 ZN	BOLT 4 X10 5931 8.G GALVANIZ.	VIS 4 X10 5931 8.G ZN	SCHRAUBE 4 X10 5931 8.G ZN	TORNILLO 4 X10 5931 8.G ZN
24	G22500171	MANICOTTO L.175	SLEEVE L.175	MANCHON L.175	MUFFE L.175	MANGUITO L.175
25	G22505085	FERMO ASSE IN LAMIERA	PLATE AXLE STOP	ARRET AXE EN TOLE	FESTSTELLVORRICHTUNG BLECHACHS	BLOQUEO EJE DE CHAPA
26	F01060040	BUL.M 8X1,25X 20 U5732 4.6 ZG	BOLT 8 X20 5732 4.6 GALVANIZED	VIS 8 X20 5732 4.6 ZN	SCHRAUBE 8 X20 5732 4.6 ZN	TORNILLO 8 X20 5732 4.6 ZN
27	F06220018	VOLANTINO 3LOBI D.65-M8X15	3-LOBE HANDWHEEL D.65-M8X15	VOLANT 3 LOBES D.65-M8X15	HANDRAD 3 BUCKEL D.65-M8X15	VOLANTE 3 LOBI D.65-M8X15
28	F01020225	VITE M14X 2X160 U5737 8.8 BR	BOLT M 14 X160 5737 8.G	VIS M 14 X160 5737 8.G	SCHRAUBE M 14 X160 5737 8.G	TORNILLO M 14 X160 5737 8.G
29	F01020232	VITE M14X 2X200 U5737 8.8 ZN	BOLT 14X200 5737 8.G GALVANIZ.	VIS 14X200 5737 8.G ZN	SCHRAUBE 14X200 5737 8.G ZN	TORNILLO 14X200 5737 8.G ZN
30	F01020432	VITE M 8X1,25X16 U5739 8.8 ZN	BOLT M 8X16	VIS M 8X16	SCHRAUBE M 8X16	TORNILLO M 8X16
31	F01020449	VITE M 8X1,25X35 U5739 8.8 ZN	BOLT M 8X35	VIS M 8X35	SCHRAUBE M 8X35	TORNILLO M 8X35
32	F01200220	DADO M 5X 0,8 U5588 6.8 ZN	NUT 5 UNI 5588 6.8 GALVANIZED	ECROU 5 UNI 5588 6.8 ZN	MUTTER 5 UNI 5588 6.8 ZN	TUERCA 5 UNI 5588 6.8 ZN
33	F01200244	DADO M 8X1,25 U5588 6.8 ZN	NUT M8	ECROU M8	MUTTER M8	DADO M8
34	F01200306	DADO M14X 2 U5588 6.8 ZN	NUT M14X2	ECROU M14X2	MUTTER M14X2	DADO M14X2
35	F01410051	ROS.M8 8,4X 17X1,6 U6592 ZN	PLANE WASHER D.8	RONDELLE D.8	SCHEIBE D.8	ARANDELA D.8
36	F01410011	ROS.M4 4,3X 9X0,8 U6592 ZN	PLANE WASHER 4,5X 9 6592	RONDELLE 4,5X 9 6592	SCHEIBE 4,5X 9 6592	ARANDELA 4,5X 9 6592
37	F01430059	ROS.M8 8,4X 15X0,8 U8842J ZN	WASHER D8 DIN 6798 D.INT.ZN	RONDELLE D8 DIN 6798 D. INT. Z	UNT. SCHEIBE D8 DIN 6798 D. IN	ARANDELA D8 DIN 6798 D.INT.ZN
38	F02200228	COPIGLIA 5X 35 U1336 ZN	SPLIT PIN 5 X35 1336 GALVAN.	GOUPILLE 5 X35 1336 ZN	SPLINT 5 X35 1336 ZN	PASADOR 5 X35 1336 ZN
39	F02100087	SPINA E.P. 5X 30 U6873 C70 BR	PIN EL. 5 X30 DIN 1481	FICHE EL. 5 X30 DIN 1481	SPANNSTIFT 5 X30 DIN 1481	CLAVIJA EL.5 X30 DIN 1481
40	F06080008	CATENA 1/2 ISO 083 16 MAGLIE	CHAIN SECTION 1/2-3/16 16 MES	TRONÃON CHA+NE 1/2-3/16 16 MAI	KET.ABSCHN.1/2-3/16 16 GLIEDER	TRAMO CAD.1/2-3/16 16 ESLABONE
41	F06080230	CATENA 5/8 ISO 10B 46 MAGLIE	CUT-DOWN CHAIN .ISO 10B-1 46-L	TRONCON CHAINE ISO 10B-1 46 MA	KETTENLZNGE ISO 10B-1 46 GLIE	TRECHO CADENA ISO 10B-1 46 ESL
42	G65336098	MOLLA CONTAETTARI CAMB.35 SP	HECT. COUNT. GEAR SPRING 35 SP	RESS. COMPTEUR D'HECTARES CH	FEDER HEKTARZZHLER GETRIEBE.35	MUELLE CONTADOR DE HECTAREAS C
43	G66248162	INGRANAGGIO Z-17 SP	GEAR Z-17 SP	ENGRENAGE Z-17 SP	ZAHNRAD Z-17 SP	ENGRANAJE Z-17 SP
44	G66248163	INGRANAGGIO Z-18 SP	GEAR Z-18 SP	ENGRENAGE Z-18 SP	ZAHNRAD Z-18 SP	ENGRANAJE Z-18 SP
45	G66248164	INGRANAGGIO Z-19 SP	GEAR Z-19 SP	ENGRENAGE Z-19 SP	ZAHNRAD Z-19 SP	ENGRANAJE Z-19 SP
46	G66248165	INGRANAGGIO Z-20 SP	GEAR Z-20 SP	ENGRENAGE Z-20 SP	ZAHNRAD Z-20 SP	ENGRANAJE Z-20 SP
47	G66248166	INGRANAGGIO Z-21 SP	GEAR Z-21 SP	ENGRENAGE Z-21 SP	ZAHNRAD Z-21 SP	ENGRANAJE Z-21 SP
48	G66248167	INGRANAGGIO Z-22 SP	GEAR Z-22 SP	ENGRENAGE Z-22 SP	ZAHNRAD Z-22 SP	ENGRANAJE Z-22 SP
49	G66248168	INGRANAGGIO Z-23 SP	GEAR Z-23 SP	ENGRENAGE Z-23 SP	ZAHNRAD Z-23 SP	ENGRANAJE Z-23 SP
50	G11430240	ASSE TRASMISSIONE L.430	TRANSMISSION AXLE L.430	AXE TRANSMISSION L430	sBERTRAGUNGSACHSE L.430	EJE TRANSMISIN L 430 A
51	G19701402	DECAL.CAMBIO RUOTA 5,00-15	GEARBOX WHEEL 5,00-15 STICKER	ETIQ. BOITE DE VIT. ROUE 5,00-	AUFKLEBER GETRIEBE RAD 5,00-15	CAL. CAMBIOVEL. RUEDA 5,00-15
52	G19701401	DECALCOMANIA TABELLA CAMBIO SP	GEAR CHART STICKER SP	DECALC. TABLEAU BOITE DE V. SP	ABZIEHB. TABELLE GETR. SP	CALCOMANIA TABLA CAMBIO SP
53	G13831520	ASSE TRASMISSIONE L.3000	TRANSMISSION AXLE L.3000	AXE TRANSMISSION L3000	sBERTRAGUNGSACHSE L.3000	EJE TRANSMISIN L 3000 A
54	G20860090	ASSE SX 5F.60 L.1460	AXLE- LEFT 5-R.60 L.1460	AXE GCH. 5 RANGEES 60 L. 1460	ACHSE LI 5R.F.60 L.1460	EJE IZQ. 5 FILA. 60 L.1460
55	G22220250	ASSE SX 6 FILE L.3500	AXLE LEFT 6-ROW L.3500	AXE GCH. 6 RANGEES L. 3500	ACHSE LINKS 6 REIHEN L.3500	EJE IZQ. 6 FILAS L.3500
56	G22230141	ASSE SEMINAT.6F.CM.80 L.2000	AXLE- 6-ROW SEEDER MACH. 80 CM	AXE SEMEUR 6 RANGEES CM. 80 L.	ACHSE SZAELEMENT 6 R.CM.80 L.2	EJE SEMBR. 6 FILAS. CM.80 L.20
57	G22230142	ASSE 4 FILE L.800	4-ROW SPINDLE L.800	AXE 4 RANGEES L. 800	ACHSE 4 REIHEN B. 800	EJE 4 FILAS L.800
58	G22250031	ASSE TRASM.SEMINAT.L.3200 SV	AXLE- SEEDING MACH. GEARBOX L.	AXE ENTRAINEMENT SEMEUR L.3200	ACHSE SZELEMENTANTRIEB .L.3200	EJE TRANS.SEMBR. L.3200 SV
59	G13732200	ASSE TRASMISSIONE L.2485	TRANSMISSION AXLE L2485	AXE TRANSMISSION L.2485	sBERTRAGUNGSACHSE L.2485	EJE TRANSMISIN L 2485 A
60	G22250275	ASSE TRASM.SEMINAT.L.2750 SV	AXLE- SEEDING MACH. GEARBOX L.	AXE ENTRAINEMENT SEMEUR L. 275	ACHSE SZELEMENTANTRIEB L.2750	EJE TRANS.SEMBR. L.2750 SV
61	G22250276	ASSE TRASM.SEMINAT.L.2200 SV	AXLE- SEEDING MACH. GEARBOX L.	AXE ENTRAINEMENT SEMEUR L. 220	ACHSE SZELEMENT-ANTRIEB.L.2200	EJE TRANS.SEMBR. L.2200 SV
62	G22280071	ASSE RUOTA-CAMBIO L.550 ID	GEARBOX WHEEL AXLE L. 550 ID	AXE ROUE BOITE DE VITESSE	RADACHSE-GETRIEBE L.550 ID	EJE RUEDA-CAMBIO L.550 ID
63	G19701412	DECAL.CAMBIO RUOTA 6,50-15	GEARBOX WHEEL 6,50-15 STICKER	ETIQ. BOITE DE VIT. ROUE 6,50-	AUFKLEBER GETRIEBE RAD 6,50-15	CAL. CAMBIOVEL. RUEDA 6,50-15
64	G19701451	DECAL.CAMBIO RUOTA 7,50-16	GEARBOX WHEEL 7,50-16 STICKER	ETIQ. BOITE DE VIT. ROUE 7,50-	AUFKLEBER GETRIEBE RAD 7,50-16	CAL. CAMBIOVEL. RUEDA 7,50-16
65	G19703161	DECAL.CAMBIO RUOTA 6,50-15 EST	GEARBOX WHEEL 6,50-15 STICKER	ETIQ. BOITE DE VIT. ROUE 6,50-	AUFKLEBER GETRIEBE RAD 6,50-15	CAL. CAMBIOVEL. RUEDA 6,50-15
66	G19701411	DECAL.TAB.CAMB.SP RUOTA MAG.	GEAR CHART STICKER SP	DECALC. TABLEAU BOITE DE V. SP	ABZIEHB. TABELLE GETR. SP	CALCOMANIA TABLA CAMBIO SP
67	G19701450	DECAL.CAMBIO RUOTA 7,50-16	GEARBOX WHEEL 7,50-16 STICKER	ETIQ. BOITE DE VIT. ROUE 7,50-	AUFKLEBER GETRIEBE RAD 7,50-16	CAL. CAMBIOVEL. RUEDA 7,50-16
68	G19703160	DECAL.CAMBIO R 6.5 RUOTE EST.	R 6.5 OUT. WHEELS GEARBOX TRAN	DECALC. BOITE DE VITESSE R 6.5	AUFKLEBER GETRIEBE R 6.5 AUSSE	ETIQUETA ADHES. CAMBIO R 6.5 R

TAV. 135

47 - **M14x220**
59 - **M14x160**

46

6

48

32 - **5.00-15 - 6.50/80-15**
69 - **7.50-16**

30 29

16 - **5.00-15 - 6.50/80-15**
65 - **7.50-16**

5.00-15 - 31
6.50/80-15 - 67
7.50-16 - 68

2

25

B

28

5.00-15 - 6.50/80-15 - 1
7.50-16 - 54

2 3

24

27 26

23

5.00-15 - 6.50/80-15 - 4
7.50-16 - 55

20

3

45 - **L. 1800**
19 - **L. 1000**
15 - **L. 800**
10 - **L. 1260**

8 7 6

5 - **5.00-15**
56 - **6.50/80-15**
57 - **7.50-16**

2

A

33

9

5.00-15 - 6.50/80-15 - 34
7.50-16 - 70

49

22 - **5.00-15 - 6.50/80-15**
66 - **7.50-16**

5.00-15 - 11
6.50/80-15 - 62
7.50-16 - 63

6

14

13 - **5.00-15**
13 - **6.50/80-15**
64 - **7.50-16**

12

35 - **5.00-15**
71 - **6.50/80-15**
72 - **7.50-16**

36 - **5.00-15**
21 - **6.50/80-15**

37 - **5.00-15**
17 - **6.50/80-15**
18 - **7.50-16**

5.00-15 - 58
6.50/80-15 - 60
7.50-16 - 61

Catena Chain		Falsa maglia Offset link	Maglia giunto Connecting link
mod.	mm	Cod.	Cod.
083	12,90	**F06080655**	**F06080501**
084	14,60	**F06080666**	**F06080502**
10 B-1	19,10	**F06080644**	**F06080499**

	Pos.
Z10	38
Z15	39
Z16	40
Z23	41
Z23 r.l.	42
Z25	43
Z30	44

< 2004

53 50 52

Ruote - Wheels
- 5.00-15
- 5.00-12
- 6.00-16

51

Ruote - Wheels
- 6.50/80-15
- 7.50-16
- 20x8.00-10 (*)
- 26x12.00-12 (*)
- 10.0x8/80-12 (*)
- 10.0/75-15.3 (*)
- 13.0/65-18 (*)

(*) a saldare - by welding

Ingranaggi trasmissione seminatori			
A	Z16	Z23	Z23
B	Z23	Z16	Z23
A	Z16	Z23 r.l.	Z23
B	Z23 r.l.	Z16	Z23 r.l.

Ingranaggi trasmissione spandiconcime e microgranulatore		
A	Z10	Z15
B	Z30	Z25

GASPARDO

RUOTE DI TRASMISSIONE

TAV. 135

Pos.	Cod.	Descrizione	Description	Description	Benennung	Descripcion
1	G16630360	CARTER SX	LEFT CASE	CARTE GCH	GEHZUSE LI	CARTER IZQ
2	F01020472	VITE M10X 1,5X25 U5739 8.8 ZN	BOLT 10X25 5739 8.G GALVANIZED	VIS 10X25 5739 8.G ZN	SCHRAUBE 10X25 5739 8.G ZN	TORNILLO 10X25 5739 8.G ZN
3	F01020481	VITE M10X 1,5X40 U5739 8.8 ZN	BOLT 10X40 5739 8.G GALVANIZED	VIS 10X40 5739 8.G ZN	SCHRAUBE 10X40 5739 8.G ZN	TORNILLO 10X40 5739 8.G ZN
4	G16630380	SCONTRO 100X70-3 4F11 70X40	STRIKER PLATE 100X70-3 4F	BUTEE 100X70-3 4F	ANSCHLAG 100X70-3 4F	ELEMENTO DE EMPALME 100X70-3 4
5	G22270280	ASSE RUOTA TRASM.NORMALE SP/S	NORMAL DRIVE WHEEL AXLE	AXE ROUE ENTRAINEMENT 5.00-15	RADACHSE NORMALER ANTRIEB SP/S	EJE RUEDA TRANS. NORMAL SP/S
6	F01200270	DADO M10X 1,5 U5588 6.8 ZN	NUT M10	ECROU M10	MUTTER M10	DADO M10
7	F04100137	SUPPORTO FY 25 TF	SUPPORT FY 25 TF	SUPPORT FY 25 TF	HALTERUNG FY 25 TF	SOPORTE FY 25 TF
8	F02050101	ANELLO E. DE 25X 1,2 U7435 C70	SEEGER RING E. 25X1,2 7435 C70	SEEGER E. 25X 1,2 U7435 C70	SEEGERING E. 25X 1,2 U7435 C70	ANILLO E. 25X 1,2 U7435 C70
9	F01010365	VITE M18X1,5X 50 U5740 8.8 ZN	SCREW 18X55 MB 5740 8.G ZN	VIS 18X55 MB 5740 8.G ZN	SCHRAUBE 18X55 MB 5740 8.G ZN	TORNILLO 18X55 MB 5740 8.G ZN
10	G22270049	ASSE 4F.85-6F.50 L.1260	4-ROW SPINDLE - 85-6-ROW-50 L.	AXE 4 RANGEES 85-6 RANGEES 50	ACHSE 4 REIHEN 85-6 REIH. 50	EJE 4 FILAS. 85-6 FILAS. 50 L.
11	G15430090	RASCHIATERRA	SOIL SCRAPER	RACLEUR	ERDSCHABER	RASCADOR TIERRA
12	F01420060	ROS.M10 10,5X 30X2,5 U6593 ZN	WASHER 10,5X30	RONDELLE 10,5X30	SCHEIBE 10,5X30	ARANDELA 10,5X30
13	F01250040	DADO COLON. 12X1.5 ZN	COLUMN NUT M12X1.5 STUD BOLT	ECROU M12X1. 5 COLONNE	SCHRAUBBOLZENMUTTER M12X1.5	TUERCA 12X1.5 COLUMNA
14	F02200452	SPINA SCATTO D.4,4 B/80 ZN	SNAP PIN D.4-4 B/80	FICHE A DETENTE D. 4-4 B/80	EINRASTSTIFT D 4-4 B/80	CLAVIJA DE MUELLE D.4-4 B/80
15	G22230142	ASSE 4 FILE L.800	4-ROW SPINDLE L.800	AXE 4 RANGEES L. 800	ACHSE 4 REIHEN B. 800	EJE 4 FILAS L.800
16	G16630311	SUPPORTO TRASMISSIONE SP540				
17	F06120207	CERCHIO 5J 15 H2 PV RAL 9001				
18	F06120208	CERCHIO 7.50-16 PV TU	RING 7.50-16 PV TU	JANTE 7.50-16 PV TU	REIFEN 7.50-16 PV TU	LLANTA 7.50-16 PV TU
19	G22230138	ASSE CAMBIO 4F.80-6F.45 L.1000	GEAR SPINDLE 4-ROW 80- 6-ROW.4	AXE BOITE DE VITESSE 4 RA	GETRIEBEACHSE 4 R. 80-6 R.45 L	EJE CAMBIO 4 FILAS. 80-6 FILAS
20	G16630810	KIT INGR.Z8 5/8"X3/8" CUSC.				
21	F06120135	CAMERA 15 T 340	CHAMBER 15 T 340	CHAMBRE 15 T 340	KAMMER 15 T 340	CAMARA 15 T 340
22	G16630350	CARTER DX	RIGHT CASE	CARTER DRT	GEHZUSE RE	CARTER DER
23	G22505085	FERMO ASSE IN LAMIERA	PLATE AXLE STOP	ARRET AXE EN TOLE	FESTSTELLVORRICHTUNG BLECHACHS	BLOQUEO EJE DE CHAPA
24	G66248218	RONDELLA DISTAN.SPAND.	MAN. SPR. SPACER WASHER	RONDELLE ENTRETOISE EP. ENGRAI	ABSTANDSCHEIBE DsNGERSTREUER	ARANDELA DISTAN.ABONAD.
25	F01020432	VITE M 8X1,25X16 U5739 8.8 ZN	BOLT M 8X16	VIS M 8X16	SCHRAUBE M 8X16	TORNILLO M 8X16
26	G22220083	RONDELLA AD IMBOCCO	LEAD-IN WASHER	RONDELLE EMBOUTIE	TRICHTERSCHEIBE	ARANDELA DE MUESCA
27	F01240024	DADO M 8X1,25 U5448 5.8 ZN	NUT 8 UNI 5448 5.8 ZN	ECROU 8 UNI 5448 5.8 ZN	MUTTER 8 UNI 5448 5.8 ZN	TUERCA 8 UNI 5448 5.8 ZN
28	G14830390	CUSCINETTO FORO QUADRO	SQUARE-HOLED BEARING	ROULEMENT AL+SAGE CARR+	VIERKANTLAGER	COJINETE ORIFICIO CUADRADO
29	G22230094	SUPPORTO CUSCINETTO	BEARING SUPPORT	SUPPORT PALIER	LAGERBsCHSE	SOPORTE COJINETE
30	F01220022	DADO M 8X1,25 D980 8 ZN	SELF LOCKING NUT M8X1,25 980V	ECROU AUTOBL. M8X1,25 980-V	SELBSTSP.MUTT. M8X1,25 980-V	DADO AUTOBL. M8X1,25 980-V
31	G16630290	SUPPORTO RUOTA 5,00-15	WHEEL SUPPORT 5,00-15	SUPPORT ROUE 5,00-15	RADLAGER 5,00-15	SOPORTE RUEDA 5,00-15
32	G16630320	ATTACCO AL SUPPORTO RUOTA	SUPP. WHEEL COUPLING	FIXATION SUPPORT ROUET	KUPPLUNG HALT. KL. RAD	CONEXIN SOP. RUEDECILLA
33	G19704690	DECAL.DISP.CATENE/INGR.R.POST.	STICKER	DECALCOMANIE	ABZIEHBILDER	CALCOMANIAS
34	F06080168	CATENA 5/8 ISO 10B 86 MAGLIE	CUT-DOWN CHAIN .ISO 10B-1 86 -	TRONCON CHAINE ISO 10B-1 86 MA	KETTENLZNGE ISO 10B-1 186 GLIE	TRECHO CADENA ISO 10B-1 86 ESL
35	F06120170	COPERTURA 5.00-15 IM 110 6PR	COVERING 500-15 IM110 4PR	COUVERTURE 500-15 IM110 4PR	MANTEL 500-15 IM110 4PR	CUBIERTA 500-15 IM110 4PR
36	F06120134	CAMERA 15 L 290	CHAMBER 15 L.290	CHAMBRE 15 L 290	KAMMER 15 L 290	CAMARA 15 L 290
37	F06120206	CERCHIO 3.00 D 15 PV RAL 9001				
38	G22220113	INGRANAGGIO Z-10 FERRO	GEAR Z-10 IRON	ENGRENAGE Z-10 FER	ZAHNRAD Z-10 EISEN	ENGRANAJE Z-10 HIERRO
39	G16630390	PIGNONE Z-15 ZN	PINION Z-15 ZN	PIGNON Z-15 ZN	RITZE Z-15 ZN	PINION Z-15 ZN
40	G16630400	PIGNONE Z-16 ZN.	PINION Z-16 ZN.	PIGNON Z-16 ZN.	RITZE Z-16 ZN.	PINION Z-16 ZN.
41	G16630410	PIGNONE Z-23 ZN.	PINION Z-23 ZN.	PIGNON Z-23 ZN.	RITZE Z-23 ZN.	PINION Z-23 ZN.
42	G16630370	INGRANAGGIO R.LIBERA Z-23 ZN	FREE WHEEL GEAR Z-23	ENGRENAGE Z-23 ROUE LIBRE	ZAHNRAD FREILAUF Z-23	ENGRANAJE R.LIBRE Z-23
43	G16630420	PIGNONE Z-25 ZN.	PINION Z-25 ZN.	PIGNON Z-25 ZN.	RITZE Z-25 ZN.	PINION Z-25 ZN.
44	G16630430	PIGNONE Z-30 ZN.	PINION Z-30 ZN.	PIGNON Z-30 ZN.	RITZE Z-30 ZN.	PINION Z-30 ZN.
45	G20870028	ASSE SERB.LATO TRAS.6F.L.1800	AXLE- GEARBOX SIDE- 6-ROW L.18	AXE RESERVOIR COTE ENTRAINEMEN	ACHSE BEHZLTER ANTRIEBSS. 6F.L	EJE DEPS. LADO TRANS. 6 FILA A
46	G19204030	SCONTRO FISS.150 2F D15				
47	F01020236	VITE M14X 2X220 U5737 8.8 BR	SCREW M14X2X220 U5737 8.8 BR	VIS M14X2X220 U5737 8.8 BR	SCHRAUBE M14X2X220 U5737 8.8	TORNILLO M14X2X220 U5737 8.8
48	F01200306	DADO M14X 2 U5588 6.8 ZN	NUT M14X2	ECROU M14X2	MUTTER M14X2	DADO M14X2
49	F02200452	SPINA SCATTO D.4,4 B/80 ZN	SNAP PIN D.4-4 B/80	FICHE A DETENTE D. 4-4 B/80	EINRASTSTIFT D 4-4 B/80	CLAVIJA DE MUELLE D.4-4 B/80
50	G16630460	PROTEZIONE VALVOLA R5.00	VALVE GUARD R5.00	PROTECTION SOUPAPE R5.00	VENTILSCHUTZ R5.00	PROTECIËN V+LVULA R5.00
51	G16630470	PROTEZIONE VALVOLA R6.50	VALVE GUARD R6.50	PROTECTION SOUPAPE R6.50	VENTILSCHUTZ R6.50	PROTECIËN V+LVULA R6.50
52	F01020440	VITE M 8X1,25X25 U5739 8.8 ZN	BOLT M8 X25 5739 8.8 ZN	VIS M8 X25 5739 8.8 ZN	SCHRAUBE M8 X25 5739 8.8 ZN	TORNILLO M8 X25 5739 8.8 ZN
53	F01230034	DADO M 8X1,25 D982 8	SELF LOCKING NUT M8X1,25	ECROU AUTOBL. M8X1,25	SELBSTSP.MUTT. M8X1,25	DADO AUTOBL. M8X1,25
54	G15231321	CARTER SX 7.50				
55	G22270284	ATTACCO RASCHIATERRA SP/S	SOIL SCRAPER COUPLING SP/S	FIXATION RACLEUR SP/S	KUPPLUNG ERDABSCHABER SP/S	CONEXIN RASPADOR SP/S O

TAV. 135

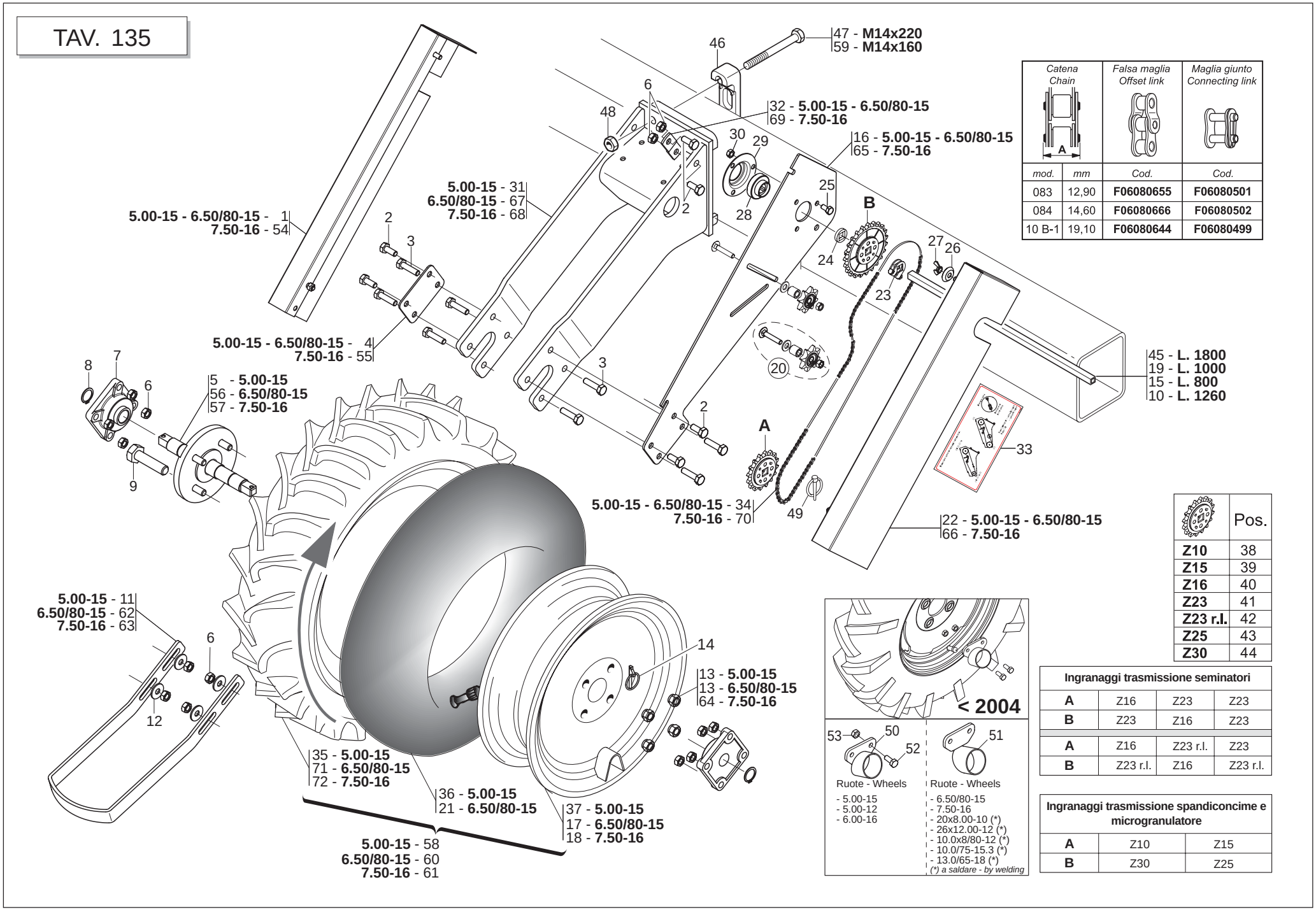

Catena Chain		Falsa maglia Offset link	Maglia giunto Connecting link
mod.	mm	Cod.	Cod.
083	12,90	**F06080655**	**F06080501**
084	14,60	**F06080666**	**F06080502**
10 B-1	19,10	**F06080644**	**F06080499**

	Pos.
Z10	38
Z15	39
Z16	40
Z23	41
Z23 r.l.	42
Z25	43
Z30	44

Ingranaggi trasmissione seminatori			
A	Z16	Z23	Z23
B	Z23	Z16	Z23
A	Z16	Z23 r.l.	Z23
B	Z23 r.l.	Z16	Z23 r.l.

Ingranaggi trasmissione spandiconcime e microgranulatore		
A	Z10	Z15
B	Z30	Z25

GASPARDO

RUOTE DI TRASMISSIONE

TAV. 135

Pos.	Cod.	Descrizione	Description	Description	Benennung	Descripcion
56	G22270281	ASSE RUOTA TRASM.MAGG. SP/S	INCREASED DRIVE WHEEL AXLE	AXE ROUE ENTRAINEMENT 6.50-15	RADACHSE sBERBEM. ANTRIEB SP/S	EJE RUEDA TRANS. SOBREDIMENS.
57	G15231161	ASSE RUOTA 7.50 X 16				
58	F06120113	RUOTA COMPL.5.00-15 6PR DX	COMPL. WHEEL 5.00-15 6PR RH.	ROUE COMPL. 5.00-15 6PR DRT.	RAD KOMPL.5.00-15 6PR RE	RUEDA COMPL.5.00-15 6PR DER.
59	F01020225	VITE M14X 2X160 U5737 8.8 BR	BOLT M 14 X160 5737 8.G	VIS M 14 X160 5737 8.G	SCHRAUBE M 14 X160 5737 8.G	TORNILLO M 14 X160 5737 8.G
60	F06120116	RUOTA 6.50/80-15 COMPL.	UPRIGHT- WIDE RUBBERED WHEEL	MONT. ROUE CAOUTCHOUT. LARG.	STZNDER BREITES GUMMIRAD	MONT.RUEDA DE GOMADA LARGA
61	F06120069	RUOTA 7.50-16 AG 10	WHEEL 7.50-16 AG10	ROUE 7.50-16 AG10	RAD 7.50-16 AG10	RUEDA 7.50-16 AG10
62	G15430660	RASCHIATERRA MAGGIORATO SP 530	INCREASED SOIL-SCRAPER SP 530	RACLEUR MAJOR. SP 530	sBERGROSSER ERDSCHABER SP 530	RASCADOR TIERRA OBREDIMENS. SP
63	G15231171	RASCHIATERRA RUOTA 7,50X16	WHEEL SOIL SCRAPER 7,50X16	RACLEUR ROUE 7,50X16	ERDSCHABER RAD 7,50X16	RASCADOR TIERRA RUEDA 7,50X16
64	F01250052	DADO COLON. 18X1,5 ZN	COLUMN NUT 18X1,5 STUD BOLT	ECROU 18X1,5 COLONNE	SCHRAUBBOLZENMUTTER 18X1,5	TUERCA 18X1,5 COLUMNA
65	G15231421	SUPPORTO TRASMISSIONE R.7.5-16	TRANSMSUPPORT 7,50X16	SUPPORT ENTRAINEMENT 7,50X16	HALTERUNG GETRIEBE 7,50X16	SOPORTE TRANSMISIN 7,50X16
66	G15231301	CARTER DX 7.50				
67	G16630300	SUPPORTO RUOTA 6,50/80-15	WHEEL SUPPORT 6,50/80-15	SUPPORT ROUE 6,50/80-15	RADLAGER 6,50/80-15	SOPORTE RUEDA 6,50/80-15
68	G15231141	SUPPORTO RUOTA 7.50	WHEEL SUPPORT 7.50	SUPPORT ROUE 7.50	RADLAGER 7.50	SOPORTE RUEDA 7.50
69	G15231330	ATTACCO AL SUPPORTO RUOTA	SUPP. WHEEL COUPLING	FIXATION SUPPORT ROUET	KUPPLUNG HALT. KL. RAD	CONEXIN SOP. RUEDECILLA
70	F06080245	CATENA 5/8 ISO 10B 94 MAGLIE				
71	F06120180	COPERTURA 6.5/80-15 IM 110 6PR	COVERING 6.5/80-15 IM 110 2PR	COUVERTURE 6.5/80-15 IM110 4PR	MANTEL .5/80-15 IM 110 2PR	CUBIERTA 6.5/80-15 IM 110 2PR
72	F06120400	COPERTURA 7.50-16 IM110 8PR TU	COVERING 7.50-16 IM110 8PR TU	COUVERTURE 7.50-16 IM110 8PR T	MANTEL 7.50-16 IM110 8PR TU	CUBIERTA 7.50-16 IM110 8PR TU

TAV.135-A

Ingranaggi trasmissione seminatori			
A	Z16	Z23	Z23
B	Z23	Z16	Z23
A	Z16	Z23 r.l.	Z23
B	Z23 r.l.	Z16	Z23 r.l.

Ingranaggi trasmissione spandiconcime e microgranulatore		
A	Z10	Z15
B	Z30	Z25

	Pos.
Z10	38
Z15	39
Z16	40
Z23	41
Z23 r.l.	42
Z25	43
Z30	44

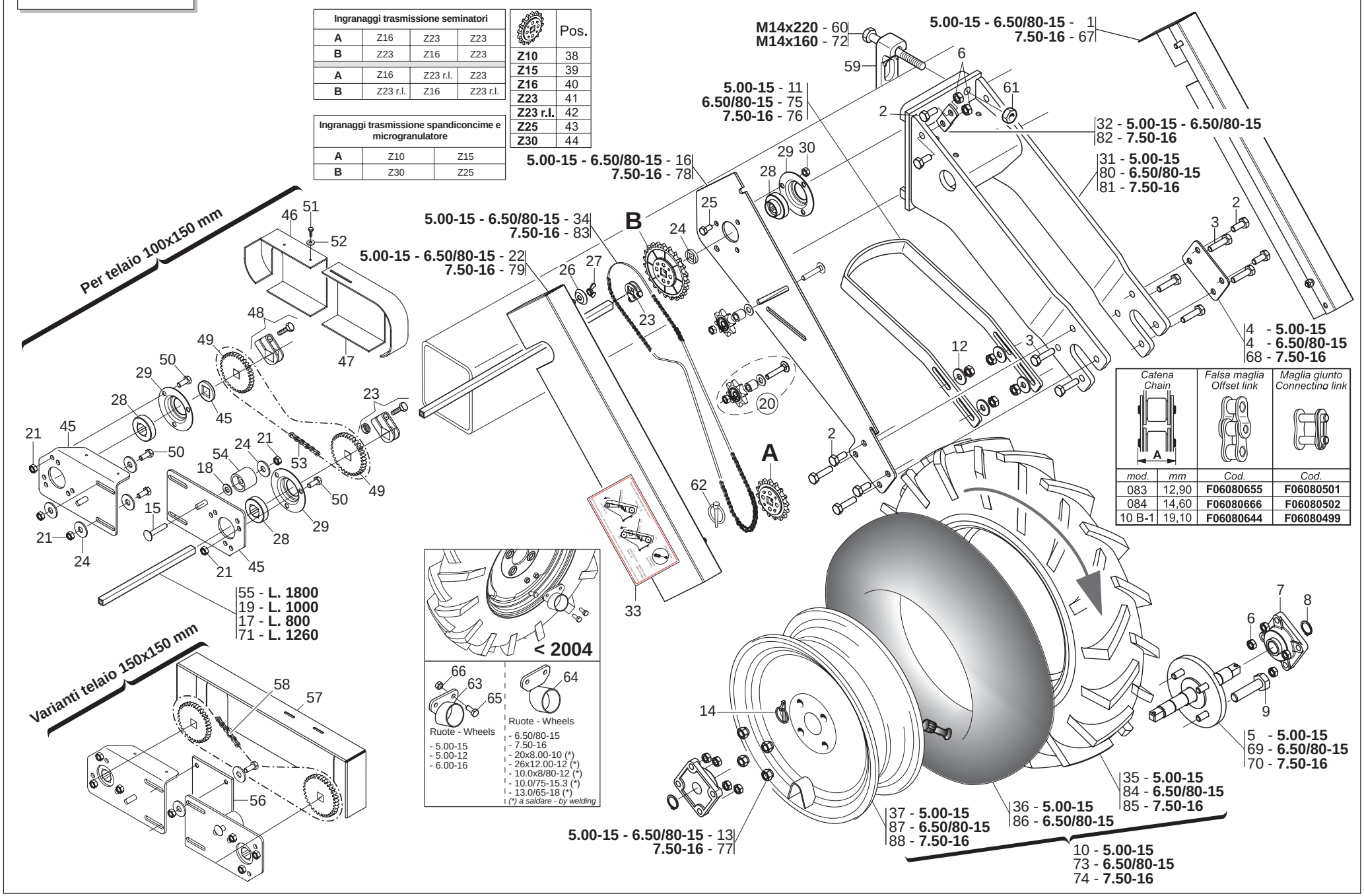

Catena Chain		Falsa maglia Offset link	Maglia giunto Connecting link
mod.	mm	Cod.	Cod.
083	12,90	F06080655	F06080501
084	14,60	F06080666	F06080502
10 B-1	19,10	F06080644	F06080499

GASPARDO

RUOTE DI TRASMISSIONE ANTERIORI

TAV.135-A

Pos.	Cod.	Descrizione	Description	Description	Benennung	Descripcion
1	G16630360	CARTER SX	LEFT CASE	CARTE GCH	GEHZUSE LI	CARTER IZQ
2	F01020472	VITE M10X 1,5X25 U5739 8.8 ZN	BOLT 10X25 5739 8.G GALVANIZED	VIS 10X25 5739 8.G ZN	SCHRAUBE 10X25 5739 8.G ZN	TORNILLO 10X25 5739 8.G ZN
3	F01020481	VITE M10X 1,5X40 U5739 8.8 ZN	BOLT 10X40 5739 8.G GALVANIZED	VIS 10X40 5739 8.G ZN	SCHRAUBE 10X40 5739 8.G ZN	TORNILLO 10X40 5739 8.G ZN
4	G16630380	SCONTRO 100X70-3 4F11 70X40	STRIKER PLATE 100X70-3 4F	BUTEE 100X70-3 4F	ANSCHLAG 100X70-3 4F	ELEMENTO DE EMPALME 100X70-3 4
5	G22270280	ASSE RUOTA TRASM.NORMALE SP/S	NORMAL DRIVE WHEEL AXLE	AXE ROUE ENTRAINEMENT 5.00-15	RADACHSE NORMALER ANTRIEB SP/S	EJE RUEDA TRANS. NORMAL SP/S
6	F01200270	DADO M10X 1,5 U5588 6.8 ZN	NUT M10	ECROU M10	MUTTER M10	DADO M10
7	F04100137	SUPPORTO FY 25 TF	SUPPORT FY 25 TF	SUPPORT FY 25 TF	HALTERUNG FY 25 TF	SOPORTE FY 25 TF
8	F02050101	ANELLO E. DE 25X 1,2 U7435 C70	SEEGER RING E. 25X1,2 7435 C70	SEEGER E. 25X 1,2 U7435 C70	SEEGERING E. 25X 1,2 U7435 C70	ANILLO E. 25X 1,2 U7435 C70
9	F01010365	VITE M18X1,5X 50 U5740 8.8 ZN	SCREW 18X55 MB 5740 8.G ZN	VIS 18X55 MB 5740 8.G ZN	SCHRAUBE 18X55 MB 5740 8.G ZN	TORNILLO 18X55 MB 5740 8.G ZN
10	F06120113	RUOTA COMPL.5.00-15 6PR DX	COMPL. WHEEL 5.00-15 6PR RH.	ROUE COMPL. 5.00-15 6PR DRT.	RAD KOMPL.5.00-15 6PR RE	RUEDA COMPL.5.00-15 6PR DER.
11	G15430090	RASCHIATERRA	SOIL SCRAPER	RACLEUR	ERDSCHABER	RASCADOR TIERRA
12	F01420060	ROS.M10 10,5X 30X2,5 U6593 ZN	WASHER 10,5X30	RONDELLE 10,5X30	SCHEIBE 10,5X30	ARANDELA 10,5X30
13	F01250040	DADO COLON. 12X1.5 ZN	COLUMN NUT M12X1.5 STUD BOLT	ECROU M12X1. 5 COLONNE	SCHRAUBBOLZENMUTTER M12X1.5	TUERCA 12X1.5 COLUMNA
14	F02200452	SPINA SCATTO D.4,4 B/80 ZN	SNAP PIN D.4-4 B/80	FICHE A DETENTE D. 4-4 B/80	EINRASTSTIFT D 4-4 B/80	CLAVIJA DE MUELLE D.4-4 B/80
15	F01060047	BUL.M 8X1,25X 45 U5732 4.6 ZN	BOLT 8X45 5732 4.6 GALVANIZED	VIS 8X45 5732 4.6 ZN	SCHRAUBE 8X45 5732 4.6 ZN	TORNILLO 8X45 5732 4.6 ZN
16	G16630311	SUPPORTO TRASMISSIONE SP540				
17	G22230142	ASSE 4 FILE L.800	4-ROW SPINDLE L.800	AXE 4 RANGEES L. 800	ACHSE 4 REIHEN B. 800	EJE 4 FILAS L.800
18	F01420060	ROS.M10 10,5X 30X2,5 U6593 ZN	WASHER 10,5X30	RONDELLE 10,5X30	SCHEIBE 10,5X30	ARANDELA 10,5X30
19	G22230138	ASSE CAMBIO 4F.80-6F.45 L.1000	GEAR SPINDLE 4-ROW 80- 6-ROW.4	AXE BOITE DE VITESSE 4 RA	GETRIEBEACHSE 4 R. 80-6 R.45 L	EJE CAMBIO 4 FILAS. 80-6 FILAS
20	G16630810	KIT INGR.Z8 5/8"X3/8" CUSC.				
21	F01200244	DADO M 8X1,25 U5588 6.8 ZN	NUT M8	ECROU M8	MUTTER M8	DADO M8
22	G16630350	CARTER DX	RIGHT CASE	CARTER DRT	GEHZUSE RE	CARTER DER
23	G22505085	FERMO ASSE IN LAMIERA	PLATE AXLE STOP	ARRET AXE EN TOLE	FESTSTELLVORRICHTUNG BLECHACHS	BLOQUEO EJE DE CHAPA
24	G66248218	RONDELLA DISTAN.SPAND.	MAN. SPR. SPACER WASHER	RONDELLE ENTRETOISE EP. ENGRAI	ABSTANDSCHEIBE DsNGERSTREUER	ARANDELA DISTAN.ABONAD.
25	F01020432	VITE M 8X1,25X16 U5739 8.8 ZN	BOLT M 8X16	VIS M 8X16	SCHRAUBE M 8X16	TORNILLO M 8X16
26	G22220083	RONDELLA AD IMBOCCO	LEAD-IN WASHER	RONDELLE EMBOUTIE	TRICHTERSCHEIBE	ARANDELA DE MUESCA
27	F01240024	DADO M 8X1,25 U5448 5.8 ZN	NUT 8 UNI 5448 5.8 ZN	ECROU 8 UNI 5448 5.8 ZN	MUTTER 8 UNI 5448 5.8 ZN	TUERCA 8 UNI 5448 5.8 ZN
28	G14830390	CUSCINETTO FORO QUADRO	SQUARE-HOLED BEARING	ROULEMENT AL+SAGE CARR+	VIERKANTLAGER	COJINETE ORIFICIO CUADRADO
29	G22230094	SUPPORTO CUSCINETTO	BEARING SUPPORT	SUPPORT PALIER	LAGERBsCHSE	SOPORTE COJINETE
30	F01220022	DADO M 8X1,25 D980 8 ZN	SELF LOCKING NUT M8X1,25 980V	ECROU AUTOBL. M8X1,25 980-V	SELBSTSP.MUTT. M8X1,25 980-V	DADO AUTOBL. M8X1,25 980-V
31	G16630290	SUPPORTO RUOTA 5,00-15	WHEEL SUPPORT 5,00-15	SUPPORT ROUE 5,00-15	RADLAGER 5,00-15	SOPORTE RUEDA 5,00-15
32	G16630320	ATTACCO AL SUPPORTO RUOTA	SUPP. WHEEL COUPLING	FIXATION SUPPORT ROUET	KUPPLUNG HALT. KL. RAD	CONEXIN SOP. RUEDECILLA
33	G19704701	DECAL.CATENE/INGR.RUOTE ANT.	STICKER	DECALCOMANIE	ABZIEHBILDER	CALCOMANIAS
34	F06080168	CATENA 5/8 ISO 10B 86 MAGLIE	CUT-DOWN CHAIN .ISO 10B-1 86 -	TRONCON CHAINE ISO 10B-1 86 MA	KETTENLZNGE ISO 10B-1 186 GLIE	TRECHO CADENA ISO 10B-1 86 ESL
35	F06120170	COPERTURA 5.00-15 IM 110 6PR	COVERING 500-15 IM110 4PR	COUVERTURE 500-15 IM110 4PR	MANTEL 500-15 IM110 4PR	CUBIERTA 500-15 IM110 4PR
36	F06120134	CAMERA 15 L 290	CHAMBER 15 L.290	CHAMBRE 15 L 290	KAMMER 15 L 290	CAMARA 15 L 290
37	F06120206	CERCHIO 3.00 D 15 PV RAL 9001				
38	G22220113	INGRANAGGIO Z-10 FERRO	GEAR Z-10 IRON	ENGRENAGE Z-10 FER	ZAHNRAD Z-10 EISEN	ENGRANAJE Z-10 HIERRO
39	G16630390	PIGNONE Z-15 ZN	PINION Z-15 ZN	PIGNON Z-15 ZN	RITZE Z-15 ZN	PINION Z-15 ZN
40	G16630400	PIGNONE Z-16 ZN.	PINION Z-16 ZN.	PIGNON Z-16 ZN.	RITZE Z-16 ZN.	PINION Z-16 ZN.
41	G16630410	PIGNONE Z-23 ZN.	PINION Z-23 ZN.	PIGNON Z-23 ZN.	RITZE Z-23 ZN.	PINION Z-23 ZN.
42	G16630370	INGRANAGGIO R.LIBERA Z-23 ZN	FREE WHEEL GEAR Z-23	ENGRENAGE Z-23 ROUE LIBRE	ZAHNRAD FREILAUF Z-23	ENGRANAJE R.LIBRE Z-23
43	G16630420	PIGNONE Z-25 ZN.	PINION Z-25 ZN.	PIGNON Z-25 ZN.	RITZE Z-25 ZN.	PINION Z-25 ZN.
44	G16630430	PIGNONE Z-30 ZN.	PINION Z-30 ZN.	PIGNON Z-30 ZN.	RITZE Z-30 ZN.	PINION Z-30 ZN.
45	G15470851	FIANCO SUPP.TRASM.SPANDI	SPREADER TRANSM. SIDE SUPPORT	COTE SUPPORT TRANSM. EPAND.	SEITEN HALTER. ANTRIEB DUNGERS	COSTADO SOPORTE TRANSM. ABONAD
46	G19002830	CARTER TRASMISSIONE SUPERIORE	TOP TRANSMISSION CASE	CARTER ENTRAINEMENT SUPERIEUR	OBERES ANTRIEBSGEHZUSE	CæRTER TRANSMISIN SUPERIOR C
47	G19002880	CARTER INFERIORE TRASM.SPAND.	BOTTOM SPREADER TRANSM. CASE	CARTER INFERIEUR TRANSM EPAND.	UNTER. ANTRIEBSGEHZUSE DsNG.GE	CæRTER INFER. TRANSMISIN ABONC
48	G22505085	FERMO ASSE IN LAMIERA	PLATE AXLE STOP	ARRET AXE EN TOLE	FESTSTELLVORRICHTUNG BLECHACHS	BLOQUEO EJE DE CHAPA
49	G22250007	INGR.CON MOZZO 1/2 Z-20 SV	GEARS- W/ HUB 1/2 Z-20 SV	ENGRENAGE 1/2 Z-20	ZAHNRAD MIT NABE 1/2 Z-20 SV	ENGRAN.CON PERNO 1/2 Z-20 SV
50	F01020436	VITE M 8X1,25X 20 U5739 8.8 ZN	BOLT M 8X20	VIS M 8X20	SCHRAUBE M 8X20	TORNILLO M 8X20
51	F01070074	VIT.A.4,2X1,41X 25 6954 4.8NI	BOLT 4-2X25 DIN 7981	VIS 4-2X25 DIN 7981	SCHRAUBE 4-2X25 DIN 7981	TORNILLO 4-2X25 DIN 7981
52	F01420011	ROS.M4 4,3X 16X 1 U6593 ZN	FLAT WASHER 4-3X 16X1-5 6593 G	ROND.PLATE 4-3X 16X1-5 6593 ZN	SCHEIBE 4-3X 16X1-5 6593 ZN	ARAND. PLANA 4-3X 16X1-5 6593
53	F06080216	CATENA 1/2 ISO 084 66 MAGLIE	CHAIN LINK1/2-3/16 66 MESH	MAILLON CHAINE 1/2-3/16 66 MA	KETTENGLIED 1/2-3/16 66 GLIED	ESL.CAD.1/2-3/16 66 ESLABONES
54	G66248207	TENDICATENA SPAND. SP-520	CHAIN TENSIONER	TENDEUR DE CHAINE EPAND. ENGR.	KETTENSPANNER DsNGERSTR. SP-52	TENSOR DE CADENA ABON. SP-520
55	G20870028	ASSE SERB.LATO TRAS.6F.L.1800	AXLE- GEARBOX SIDE- 6-ROW L.18	AXE RESERVOIR COTE ENTRAINEMEN	ACHSE BEHZLTER ANTRIEBSS. 6F.L	EJE DEPS. LADO TRANS. 6 FILA A

TAV.135-A

Ingranaggi trasmissione seminatori			
A	Z16	Z23	Z23
B	Z23	Z16	Z23
A	Z16	Z23 r.l.	Z23
B	Z23 r.l.	Z16	Z23 r.l.

Ingranaggi trasmissione spandiconcime e microgranulatore		
A	Z10	Z15
B	Z30	Z25

	Pos.
Z10	38
Z15	39
Z16	40
Z23	41
Z23 r.l.	42
Z25	43
Z30	44

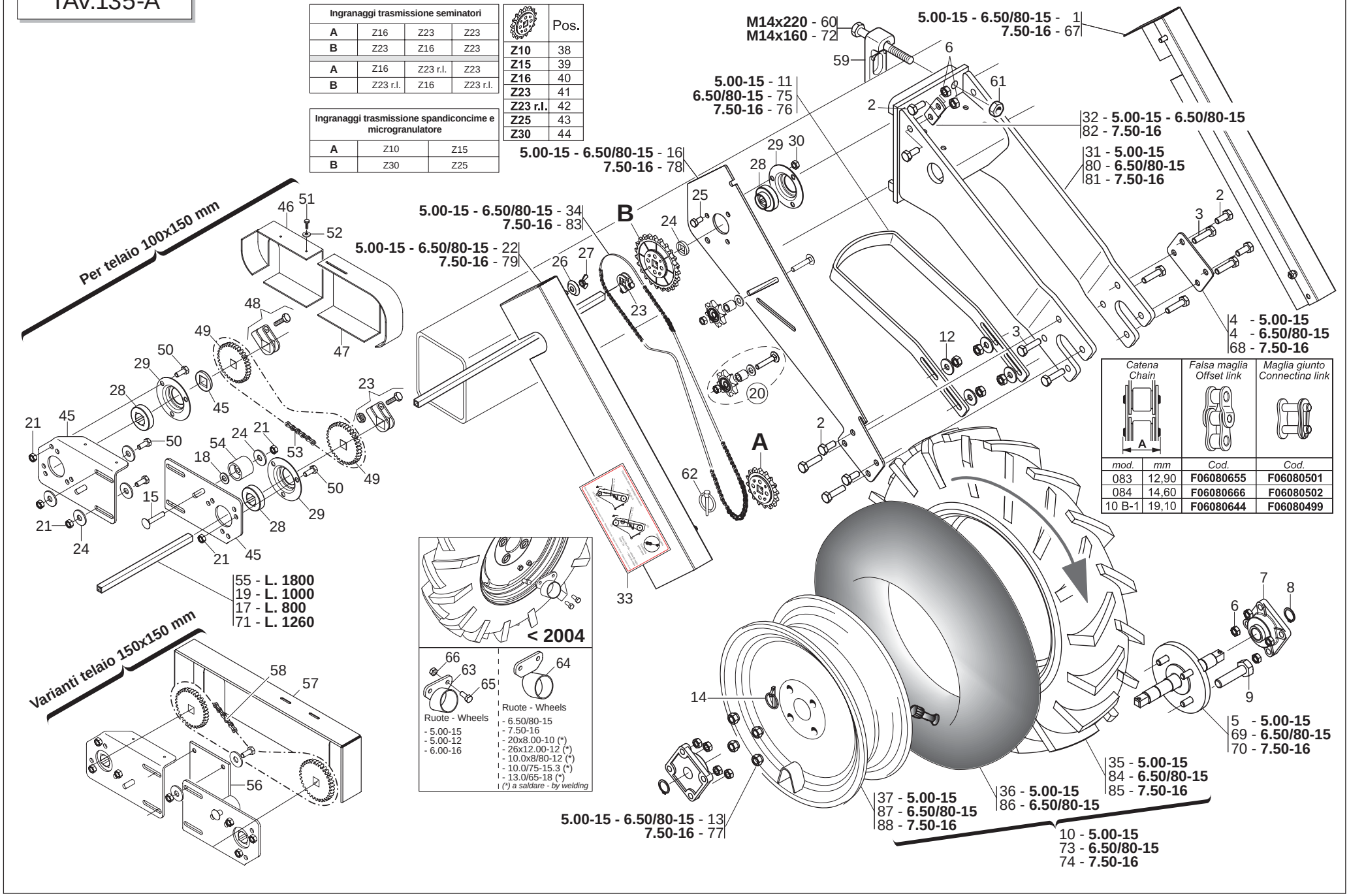

Catena Chain		Falsa maglia Offset link	Maglia giunto Connecting link
mod.	mm	Cod.	Cod.
083	12,90	F06080655	F06080501
084	14,60	F06080666	F06080502
10 B-1	19,10	F06080644	F06080499

GASPARDO

RUOTE DI TRASMISSIONE ANTERIORI

TAV.135-A

Pos.	Cod.	Descrizione	Description	Description	Benennung	Descripcion
56	G15272470	PIASTRA PROLUNGA TRASM.SPAND.	TRANSMISSION EXTENSION PLATE	PLAQUE RALL. TRANSMISSION	VERL.PLATTE GETRIEBE	PLACA PROL. TRANSMISIËN
57	G15473080	CARTER RINVIO DA ANT.A POST.	INTERMEDIATE CASE	CARTER TRANSMISSION	VORGELEGEGEHZUSE	CµRTER TRANSMISIN C
58	F06080038	CATENA 1/2 ISO 083 74 MAGLIE	CHAIN 1/2 ISO 083 74 LINKS	CHAINE 1/2 ISO 083 74 MAILLES	KETTE 1/2 ISO 083 94 GLIEDER	CADENA 1/2 ISO 083 74 ESLABNEL
59	G19204030	SCONTRO FISS.150 2F D15				
60	F01020236	VITE M14X 2X220 U5737 8.8 BR	SCREW M14X2X220 U5737 8.8 BR	VIS M14X2X220 U5737 8.8 BR	SCHRAUBE M14X2X220 U5737 8.8	TORNILLO M14X2X220 U5737 8.8
61	F01200306	DADO M14X 2 U5588 6.8 ZN	NUT M14X2	ECROU M14X2	MUTTER M14X2	DADO M14X2
62	F02200452	SPINA SCATTO D.4,4 B/80 ZN	SNAP PIN D.4-4 B/80	FICHE A DETENTE D. 4-4 B/80	EINRASTSTIFT D 4-4 B/80	CLAVIJA DE MUELLE D.4-4 B/80
63	G16630460	PROTEZIONE VALVOLA R5.00	VALVE GUARD R5.00	PROTECTION SOUPAPE R5.00	VENTILSCHUTZ R5.00	PROTECIËN V+LVULA R5.00
64	G16630470	PROTEZIONE VALVOLA R6.50	VALVE GUARD R6.50	PROTECTION SOUPAPE R6.50	VENTILSCHUTZ R6.50	PROTECIËN V+LVULA R6.50
65	F01020440	VITE M 8X1,25X25 U5739 8.8 ZN	BOLT M8 X25 5739 8.8 ZN	VIS M8 X25 5739 8.8 ZN	SCHRAUBE M8 X25 5739 8.8 ZN	TORNILLO M8 X25 5739 8.8 ZN
66	F01230034	DADO M 8X1,25 D982 8	SELF LOCKING NUT M8X1,25	ECROU AUTOBL. M8X1,25	SELBSTSP.MUTT. M8X1,25	DADO AUTOBL. M8X1,25
67	G15231321	CARTER SX 7.50				
68	G15231440	SUPP.RASCHIATERRA R.7,50 ANT.	SCRAPER SUPPORT 7,50 FRONT	SUPP. RACLE 7,50 AVANT	ERDSCHABERHALTERUNG 7,50	SOPORTE RASCADOR 7,50 ANT.
69	G22270281	ASSE RUOTA TRASM.MAGG. SP/S	INCREASED DRIVE WHEEL AXLE	AXE ROUE ENTRAINEMENT 6.50-15	RADACHSE sBERBEM. ANTRIEB SP/S	EJE RUEDA TRANS. SOBREDIMENS.
70	G15231161	ASSE RUOTA 7.50 X 16				
71	G22270049	ASSE 4F.85-6F.50 L.1260	4-ROW SPINDLE - 85-6-ROW-50 L.	AXE 4 RANGEES 85-6 RANGEES 50	ACHSE 4 REIHEN 85-6 REIH. 50	EJE 4 FILAS. 85-6 FILAS. 50 L.
72	F01020225	VITE M14X 2X160 U5737 8.8 BR	BOLT M 14 X160 5737 8.G	VIS M 14 X160 5737 8.G	SCHRAUBE M 14 X160 5737 8.G	TORNILLO M 14 X160 5737 8.G
73	F06120116	RUOTA 6.50/80-15 COMPL.	UPRIGHT- WIDE RUBBERED WHEEL	MONT. ROUE CAOUTCHOUT. LARG.	STZNDER BREITES GUMMIRAD	MONT.RUEDA DE GOMADA LARGA
74	F06120069	RUOTA 7.50-16 AG 10	WHEEL 7.50-16 AG10	ROUE 7.50-16 AG10	RAD 7.50-16 AG10	RUEDA 7.50-16 AG10
75	G15430660	RASCHIATERRA MAGGIORATO SP 530	INCREASED SOIL-SCRAPER SP 530	RACLEUR MAJOR. SP 530	sBERGROSSER ERDSCHABER SP 530	RASCADOR TIERRA OBREDIMENS. SP
76	G15231430	RASCHIATERRA RUOTA 7,5 ANT.	FRONT SOIL-SCRAPER WHEEL 7,5	RACLEUR ROUE AVANT 7,5	ERDSCHABER VORDERRAD 7,5	RASCADOR DE TIERRA RUEDA DEL.
77	F01250052	DADO COLON. 18X1,5 ZN	COLUMN NUT 18X1,5 STUD BOLT	ECROU 18X1,5 COLONNE	SCHRAUBBOLZENMUTTER 18X1,5	TUERCA 18X1,5 COLUMNA
78	G15231421	SUPPORTO TRASMISSIONE R.7.5-16	TRANSMSUPPORT 7,50X16	SUPPORT ENTRAINEMENT 7,50X16	HALTERUNG GETRIEBE 7,50X16	SOPORTE TRANSMISIN 7,50X16
79	G15231301	CARTER DX 7.50				
80	G16630300	SUPPORTO RUOTA 6,50/80-15	WHEEL SUPPORT 6,50/80-15	SUPPORT ROUE 6,50/80-15	RADLAGER 6,50/80-15	SOPORTE RUEDA 6,50/80-15
81	G15231141	SUPPORTO RUOTA 7.50	WHEEL SUPPORT 7.50	SUPPORT ROUE 7.50	RADLAGER 7.50	SOPORTE RUEDA 7.50
82	G15231330	ATTACCO AL SUPPORTO RUOTA	SUPP. WHEEL COUPLING	FIXATION SUPPORT ROUET	KUPPLUNG HALT. KL. RAD	CONEXIN SOP. RUEDECILLA
83	F06080245	CATENA 5/8 ISO 10B 94 MAGLIE				
84	F06120180	COPERTURA 6.5/80-15 IM 110 6PR	COVERING 6.5/80-15 IM 110 2PR	COUVERTURE 6.5/80-15 IM110 4PR	MANTEL .5/80-15 IM 110 2PR	CUBIERTA 6.5/80-15 IM 110 2PR
85	F06120400	COPERTURA 7.50-16 IM110 8PR TU	COVERING 7.50-16 IM110 8PR TU	COUVERTURE 7.50-16 IM110 8PR T	MANTEL 7.50-16 IM110 8PR TU	CUBIERTA 7.50-16 IM110 8PR TU
86	F06120135	CAMERA 15 T 340	CHAMBER 15 T 340	CHAMBRE 15 T 340	KAMMER 15 T 340	CAMARA 15 T 340
87	F06120207	CERCHIO 5J 15 H2 PV RAL 9001				
88	F06120208	CERCHIO 7.50-16 PV TU	RING 7.50-16 PV TU	JANTE 7.50-16 PV TU	REIFEN 7.50-16 PV TU	LLANTA 7.50-16 PV TU

TAV. 320

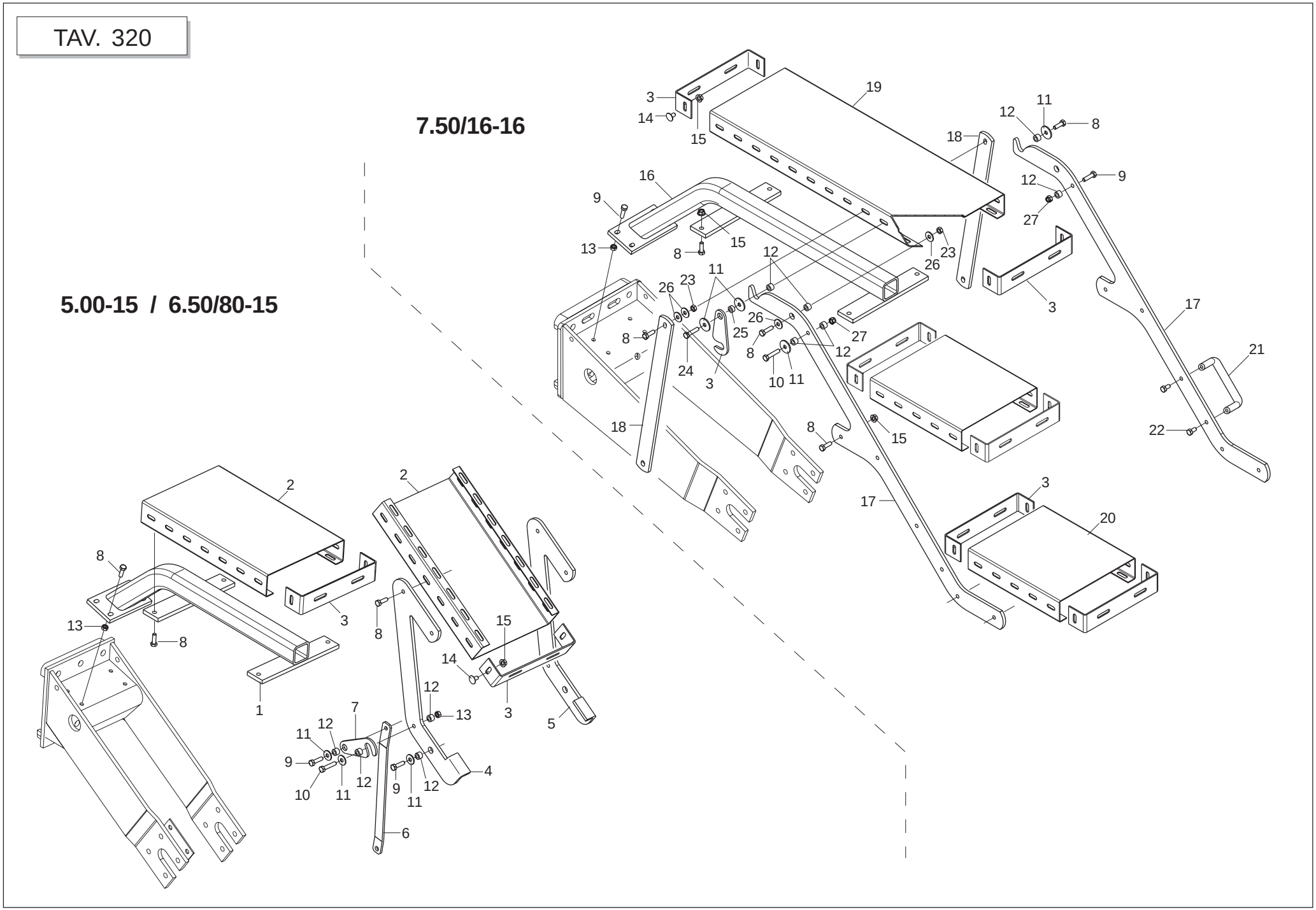

GASPARDO

cod. G19530197

SCALETTA RUOTE PORTANTI

TAV. 320

Pos.	Cod.	Descrizione	Description	Description	Benennung	Descripcion
1	G15171840	SUPPORTO SCALETTA R.5/6,5	STEP LADDER SUPPORT R.5/6,5	SUPPORT ECHELLE R.5/6,5	STUFENHALTERUNG R.5/6,5	SOPORTE ESCALERILLA R.5/6,5
2	G15312290	GRADINO	STEP	MARCHE	STUFE	ESCALN T
3	G07000379	TERMINALE PEDANA ZN	GALVANIZED PLATFORM END	PIECE TERMINALE MARCHEPIED ZN	LAUFSTEGABSCHLUSS ZN	TERMINAL PLATAFORMA ZN
4	G16013510	SUPPORTO SX PEDANA	LH FOOTPLATE SUPPORT	SUPPORT GCH.MARCHEPIED	TRITTBRETTHALTERUNG LI	SOPORTE IZQ. PLATAFORMA
5	G16013500	SUPPORTO DX PEDANA	RH FOOTPLATE SUPPORT	SUPPORT DRT. MARCHEPIED	RE TRITTBRETTHALTERUNG	SOPORTE DER. PLATAFORMA
6	G15211540	SUPPORTO SX SCALETTA	LEFT SUPPORT	SUPPORT GCH	HALTERUNG LI	SOPORTE IZQ
7	G15171791	FERMO SCALETTA ZN	RAMP STOP	BUTEE PETITE ECHELLE	LEITERSPERRE	BLOQUEO ESCALERA
8	F01020440	VITE M 8X1,25X25 U5739 8.8 ZN	BOLT M8 X25 5739 8.8 ZN	VIS M8 X25 5739 8.8 ZN	SCHRAUBE M8 X25 5739 8.8 ZN	TORNILLO M8 X25 5739 8.8 ZN
9	F01020445	VIT.M 8X1,25X 30 U5739 8.8 ZN	BOLT M 8X30	VIS M 8X30	SCHRAUBE M 8X30	TORNILLO M 8X30
10	F01020450	VITE M 8X1,25X40 U5739 8.8 ZN	BOLT M 8X40	VIS M 8X40	SCHRAUBE M 8X40	TORNILLO M 8X40
11	F01420049	ROS.M8 8,4X 32X 2 U6593 ZN	WASHER M8 8,4X32X2 U6593 ZG	RONDELLE M8 8,4X32X2 U6593 ZG	SCHEIBE M8 8,4X32X2 U6593 ZG	ARANDELA M8 8,4X32X2 U6593 ZG
12	G18801580	BOCCOLA 8,5 X15 X10 ZN	BUSH 8.5 X15 X10	DOUILLE 8,5 X15 X10	BUCHSE 8,5 X15 X10	MANGUITO 8,5 X15 X10
13	F01200244	DADO M 8X1,25 U5588 6.8 ZN	NUT M8	ECROU M8	MUTTER M8	DADO M8
14	F01030495	VITE TTCN 90' M8X16 + DADO ZN	TTCN 90' BOLT M8X16 GALVANIZED	VIS TTCN 90' M8X16 ZN	SCHRAUBE TTCN 90' M8X16 ZN	TORNILLO TTCN 90' M8x16 ZN
15	F01260043	DADO FLANG.M8 D6923 8.8 ZN	FLANGE NUT M8 DIN 6923 8.8 GAL	ECROU BRIDE .M8 DIN 6923 8.8 Z	GEFLANSCHTE MUTTER M8 DIN6923	TUERCA BRIDA M8 DIN 6923 8.8 Z
16	G15171750	SUPPORTO PEDANA	FOOTBOARD SUPPORT	SUPPORT MARCHEPIED	TRITTBRETTHALTERUNG	SOPORTE PLATAFORMA
17	G15171781	FIANCO SUPPORTO PEDANE	PLATFORM SUPPORT	SUPPORT MARCHEPIED	LAUFSTEGHALTERUNG	SOPORTE PLATAFORMAS COMPLETO
18	G15171800	APPOGGIO DI RINFORZO	REINFORCEMENT REST	REPOSE DE RENFORCEMENT	VERSTZRKUNGSAUFLAGE	APOYADOR DE REFUERZO
19	G15171760	PEDANA 250X720X60 SP2 ZN	PLATFORM 250X720X60 SP2 ZN	MARCHEPIED 250X720X60 SP2 ZN	TRITTBRETT 250X720X60 SP2 ZN	PLATAFORMA 250X720X60 SP2 ZN
20	G15171770	PEDANA 250X300X60 SP2 ZN				
21	F05150112	MANIGLIA INTERAS. 117 FORO 8MM	HANDLE	POIGNEE	HANDGRIFF	MANILLA
22	F01020432	VITE M 8X1,25X16 U5739 8.8 ZN	BOLT M 8X16	VIS M 8X16	SCHRAUBE M 8X16	TORNILLO M 8X16
23	F01220022	DADO M 8X1,25 D980 8 ZN	SELF LOCKING NUT M8X1,25 980V	ECROU AUTOBL. M8X1,25 980-V	SELBSTSP.MUTT. M8X1,25 980-V	DADO AUTOBL. M8X1,25 980-V
24	F01020449	VITE M 8X1,25X35 U5739 8.8 ZN	BOLT M 8X35	VIS M 8X35	SCHRAUBE M 8X35	TORNILLO M 8X35
25	G20980050	BOCCOLA 15X7X8,5 ZN	BUSHING 15X7X8-5 ZN	BOITE 15X7X8-5 ZN	BsCHSE 15X7X8-5 ZN	CASQUILLO 15X7X8-5 ZN
26	F01420048	ROS.M8 8,4X 24X 2 U6593 ZN	PLANE WASHER D.8	RONDELLE D.8	SCHEIBE D.8	ARANDELA D.8
27	F01230034	DADO M 8X1,25 D982 8	SELF LOCKING NUT M8X1,25	ECROU AUTOBL. M8X1,25	SELBSTSP.MUTT. M8X1,25	DADO AUTOBL. M8X1,25

TAV. 283

RUOTE REGOLABILI - SEMINA SU COLMI

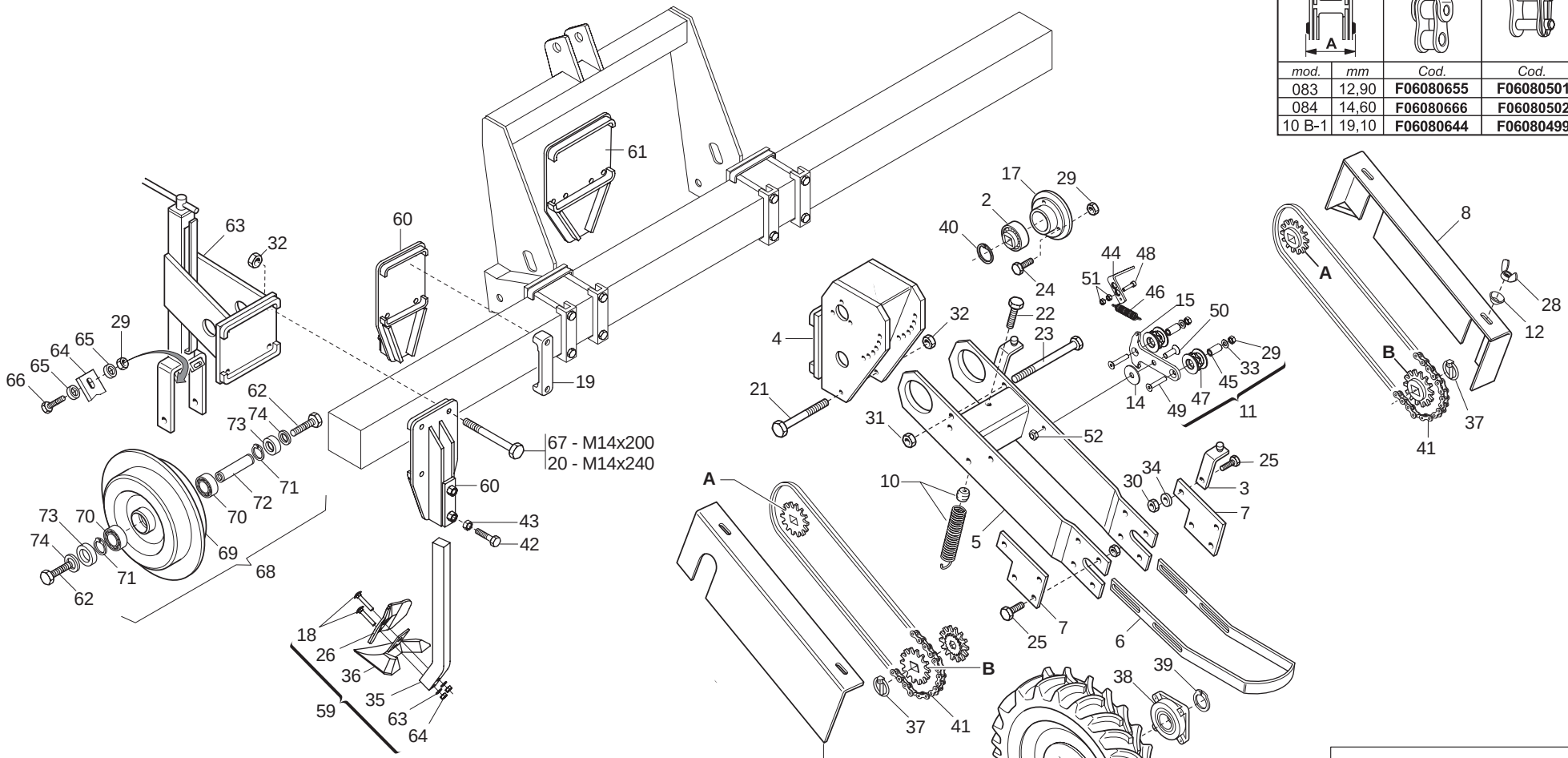

Catena Chain		Falsa maglia Offset link	Maglia giunto Connecting link
mod.	mm	Cod.	Cod.
083	12,90	**F06080655**	**F06080501**
084	14,60	**F06080666**	**F06080502**
10 B-1	19,10	**F06080644**	**F06080499**

Z	Pos.
Z10	53
Z15	54
Z16	55
Z23	56
Z25	57
Z30	58

Ingranaggi trasmissione seminatori			
A	Z16	Z23	Z23
B	Z23	Z16	Z23

Ingranaggi trasmissione spandiconcime e microgranulatore		
A	Z10	Z15
B	Z30	Z25

RUOTE REGOLABILI

TAV. 283

Pos.	Cod.	Descrizione	Description	Description	Benennung	Descripcion
1	F06120114	RUOTA COMPL.5.00-15 6PR PV-SX	COMPL. WHEEL 5.00-15 6PR PV-SX	ROUE COMPL. 5.00-15 6PR PV-SX	RAD KOMPL.5.00-15 6PR PV-SX	RUEDA COMPL.5.00-15 6PR PV-SX
2	G14830390	CUSCINETTO FORO QUADRO	SQUARE-HOLED BEARING	ROULEMENT AL+SAGE CARR+	VIERKANTLAGER	COJINETE ORIFICIO CUADRADO
3	G15430110	SUPPORTO CARTER	CASE SUPPORT	SUPPORT CARTER	HALTERUNG GEHZUSE	SOPORTE CæRTER
4	G15430751	ATTACCO RUOTE REGOLABILI	ADJUSTABLE WHEELS COVER	FIXATION ROUES REGLABLES	REGULIERBARE RADKUPPLUNG	CONEXIN RUEDAS REGULABLES O
5	G15430780	SUPPORTO RUOTA REGOLABILE	ADJUSTABLE WHEEL SUPPORT	SUPPORT ROUE REGLABLE	REGULIERBARES RADLAGER	SOPORTE RUEDA REGULABLE
6	G15430920	RASCHIATERRA	SOIL SCRAPER	RACLEUR	ERDSCHABER	RASCADOR DE TIERRA
7	G15430930	SUPPORTO RASCHIATERRA	SOIL SCRAPER SUPPORT	SUPPORT RACLEUR	HALTERUNG ERDSCHABER	SOPORTE RASCADOR TIERRA
8	G15430980	CARTER	CASE	CARTER	GEHZUSE	CæRTER
9	G15431050	CARTER SX RUOTA REGOLABILE	ADJUSTABLE LEFT WHEEL CASE	CARTER GCH ROUE REGLABLE	GEHZUSE LI REGULIERBARES RAD	CæRTER IZQ RUEDA REGULABLE
10	G15431180	MOLLA RUOTE REGOLABILI	ADJUSTABLE WHEEL SPRING	RESSORT ROUES REGLABLES F	EDER EINSTELLB. RZDER M	UELLE RUOTAS REGULABLES A
11	G16630710	TENDICATENA CON VITE	CHAIN TENSIONER WITH SCREW			
12	G22220083	RONDELLA AD IMBOCCO	LEAD-IN WASHER	RONDELLE EMBOUTIE	TRICHTERSCHEIBE	ARANDELA DE MUESCA
13	F01410051	ROS.M8 8,4X 17X1,6 U6592 ZN	PLANE WASHER D.8	RONDELLE D.8	SCHEIBE D.8	ARANDELA D.8
14	F01420061	ROS.M10 10,5X 40X2,5 U6593 ZN	WASHER 11X40X2.5 6593 ZN	RONDELLE 11X40X2,5 6593 ZN	UNTERLEGSCHEIBE 11X40X2,5 6593	ARANDELA 11X40X2,5 6593 ZN
15	G15830460	TENDICATENA SEM. R	SEEDER CHAIN TIGHTENER R	TENDEUR DE CHAINE SEMEUR R	KETTENSPANNER SZELEMENT R	TENSOR DE CADENA SEMBRADOR R
16	G22270280	ASSE RUOTA TRASM.NORMALE SP/S	NORMAL DRIVE WHEEL AXLE	AXE ROUE ENTRAINEMENT 5.00-15	RADACHSE NORMALER ANTRIEB SP/S	EJE RUEDA TRANS. NORMAL SP/S
17	G22310011	FLANGIA CAMBIO DP	GEARBOX FLANGE DP	BRIDE BOITE DE VITESSE DP	FLANSCH GETRIEBE DP	BRIDA CAMBIO DP
18	F01060086	BUL.M10X 1,5X 70 U5732 4.6 ZN	BOLT 10X70 5732 4.6 GALVANIZED	VIS 10X70 5732 4.6 ZN	SCHRAUBE 10X70 5732 4.6 ZN	TORNILLO 10X70 5732 4.6 ZN
19	G19204030	SCONTRO FISS.150 2F D15				
20	F01020238	VITE M14X 2X240 U5737 8.8 BR	BOLT M 14 X240 5737 8.G	VIS M 14 X240 5737 8.G	SCHRAUBE M 14 X240 5737 8.G	TORNILLO M 14 X240 5737 8.G
21	F01020229	VITE M14X 2X180 U5737 8.8 BR	SCREW 14X180 5737 8.G	VIS 14X180 5737 8.G	SCHRAUBE 14X180 5737 8.G	TORNILLO 14X180 5737 8.G
22	F01020256	VITE M16X 2X 60 U5737 8.8 ZN	BOLT M16X 2X 60 U5737 8.8 ZB	VIS M16X 2X 60 U5737 8.8 ZB	SCHR.M16X 2X 60 U5737 8.8 ZB	TORN.M16X 2X 60 U5737 8.8 ZB
23	F01020187	VITE M12X1,75X190 5737 8.8 ZN	BOLT 12X190 5737 8.G GALVANIZ	VIS 12X190 5737 8.G ZN	SCHRAUBE 12X190 5737 8.G ZN	TORNILLO 12X1900 5737 8.G ZN
24	F01020449	VITE M 8X1,25X35 U5739 8.8 ZN	BOLT M 8X35	VIS M 8X35	SCHRAUBE M 8X35	TORNILLO M 8X35
25	F01020472	VITE M10X 1,5X25 U5739 8.8 ZN	BOLT 10X25 5739 8.G GALVANIZED	VIS 10X25 5739 8.G ZN	SCHRAUBE 10X25 5739 8.G ZN	TORNILLO 10X25 5739 8.G ZN
26	G23440084	VOMERE SUPPLEMENTARE HL LM	PLOUGH-SHARE- SUPPLEM. HL LM	SOC SUPPLEMENTAIRE HL LM	ZUSZTZLICHE SCHAR HL LM	REJA SUPLEMENTARIA HL LM
27	F01020479	VITE M10X 1,5X35 U5739 8.8 ZN	BOLT M 10X35	VIS M 10X35	SCHRAUBE M 10X35	TORNILLO M 10X35
28	F01240024	DADO M 8X1,25 U5448 5.8 ZN	NUT 8 UNI 5448 5.8 ZN	ECROU 8 UNI 5448 5.8 ZN	MUTTER 8 UNI 5448 5.8 ZN	TUERCA 8 UNI 5448 5.8 ZN
29	F01200244	DADO M 8X1,25 U5588 6.8 ZN	NUT M8	ECROU M8	MUTTER M8	DADO M8
30	F01200270	DADO M10X 1,5 U5588 6.8 ZN	NUT M10	ECROU M10	MUTTER M10	DADO M10
31	F01200293	DADO M12X1,75 U5588 6.8 ZN	NUT M12	ECROU M12	MUTTER M12	DADO M12
32	F01200306	DADO M14X 2 U5588 6.8 ZN	NUT M14X2	ECROU M14X2	MUTTER M14X2	DADO M14X2
33	F01250040	DADO COLON. 12X1.5 ZN	COLUMN NUT M12X1.5 STUD BOLT	ECROU M12X1. 5 COLONNE	SCHRAUBBOLZENMUTTER M12X1.5	TUERCA 12X1.5 COLUMNA
34	F01420060	ROS.M10 10,5X 30X2,5 U6593 ZN	WASHER 10,5X30	RONDELLE 10,5X30	SCHEIBE 10,5X30	ARANDELA 10,5X30
35	G23440087	GAMBO ZAPPA POST. HL	SHANK - REAR HOE HL	TIGE HOUE ARRIERE HL	SCHAFT HINT. MESSER HL	VæSTAGO AZADA TRAS. HL
36	G10740301	ZAPPA POST.215 SP.6				
37	F02200452	SPINA SCATTO D.4,4 B/80 ZN	SNAP PIN D.4-4 B/80	FICHE A DETENTE D. 4-4 B/80	EINRASTSTIFT D 4-4 B/80	CLAVIJA DE MUELLE D.4-4 B/80
38	F04100137	SUPPORTO FY 25 TF	SUPPORT FY 25 TF	SUPPORT FY 25 TF	HALTERUNG FY 25 TF	SOPORTE FY 25 TF
39	F02050101	ANELLO E. DE 25X 1,2 U7435 C70	SEEGER RING E. 25X1,2 7435 C70	SEEGER E. 25X 1,2 U7435 C70	SEEGERING E. 25X 1,2 U7435 C70	ANILLO E. 25X 1,2 U7435 C70
40	F02050370	ANELLO E. DI 47X1,75 U7437 C70	SEEGER RING 47X 1,75 U7437 C70	SEEGER E. 47X 1,75 U7437 C70	SEEGERING E. 47X1,75 U7437 C70	ANILLO E. 47X 1,75 U7437 C70
41	F06080170	CATENA 5/8 ISO 10B 98 MAGLIE	CUT-DOWN CHAIN .ISO 10B-1 98 -	TRONCON CHAINE ISO 10B-1 98 MA	KETTENLZNGE ISO 10B-1 98 GLIED	TRECHO CADENA ISO 10B-1 98 ESL
42	F01020252	VITE M16X 2X 50 U5737 8 8 ZN	BOLT M16X 2X 50 U5737 8.8 ZB	VIS M16X 2X 50 U5737 8.8 ZB	SCHR.M16X 2X 50 U5737 8.8 ZB	TORN.M16X 2X 50 U5737 8.8 ZB
43	F01200444	DADO M16X 2 U5589 6S ZN	NUT M16X2	ECROU M16X2	MUTTER M16X2	DADO M16X2
44	G17130140	LEVA CAMBIO	GEAR LEVER	LEVIER BOITE DE VITESSE	GETRIEBE HEBEL	PALANCA DE CAMBIO
45	G18802610	BOCCOLA 8,1X14X28 INOX	BUSHING 8,1X14X28 INOX	BOITE 8,1X14X28 INOX	BUCHSE 8,1X14X28 INOX	MANGUITO 8,1X14X28 INOX
46	G18902970	MOLLA TRAZ.CAMBIO ZN SP	GALVAN. GEAR TRACT. SPRING SP	RESS. TRACT. BOITE VITESSE ZN	ZUGFEDER GETRIEBE ZN SP	MUELLE TRAC. CAMBIO ZN SP
47	G19005070	INGRANAGGIO TENDICATENA Z8	CHAIN TIGHTENER GEAR	ENGRENAGE TENDEUR DE CHAINE	KETTENSPANNER ZAHNRAD	ENGRANAJE TENSOR DE LA CADENA
48	F01040064	VITE M 6X 1X25 U5931 8.8 ZN	BOLT 6 X25 5931 8.G GALVANIZ.	VIS 6 X25 5931 8.G ZN	SCHRAUBE 6 X25 5931 8.G ZN	TORNILLO 6 X25 5931 8.G ZN
49	F01030061	VITE M 8X1,25X45 U5933 10.9 ZD				
50	F01030096	VITE M10X 1,5X30 U5933 10.9 ZN				
51	F01200232	DADO M 6X 1 U5588 6.8 ZN				
52	F01220033	DADO M10X 1,5 D980 8 ZN	NUT M10X 1,5 D980 8 ZB	ECRO.M10X 1,5 D980 8 ZB	MUTT.M10X 1,5 D980 8 ZB	TUER.M10X 1,5 D980 8 ZB
53	G22220113	INGRANAGGIO Z-10 FERRO	GEAR Z-10 IRON	ENGRENAGE Z-10 FER	ZAHNRAD Z-10 EISEN	ENGRANAJE Z-10 HIERRO
54	G16630390	PIGNONE Z-15 ZN	PINION Z-15 ZN	PIGNON Z-15 ZN	RITZE Z-15 ZN	PINION Z-15 ZN
55	G16630400	PIGNONE Z-16 ZN.	PINION Z-16 ZN.	PIGNON Z-16 ZN.	RITZE Z-16 ZN.	PINION Z-16 ZN.

TAV. 283

RUOTE REGOLABILI - SEMINA SU COLMI

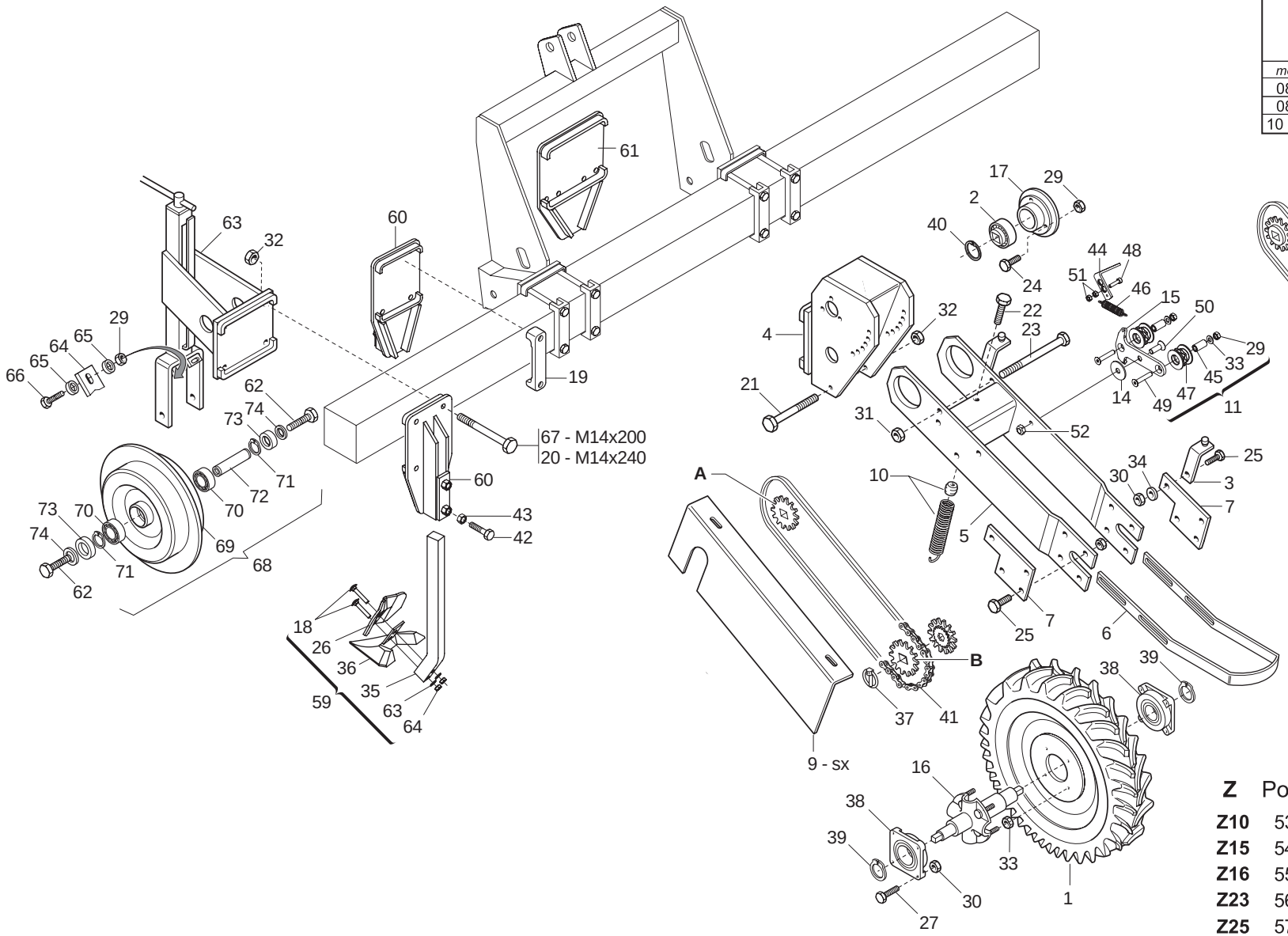

Catena Chain		Falsa maglia Offset link	Maglia giunto Connecting link
mod.	mm	Cod.	Cod.
083	12,90	**F06080655**	**F06080501**
084	14,60	**F06080666**	**F06080502**
10 B-1	19,10	**F06080644**	**F06080499**

Z	Pos.
Z10	53
Z15	54
Z16	55
Z23	56
Z25	57
Z30	58

Ingranaggi trasmissione seminatori			
A	Z16	Z23	Z23
B	Z23	Z16	Z23

Ingranaggi trasmissione spandiconcime e microgranulatore		
A	Z10	Z15
B	Z30	Z25

GASPARDO

RUOTE REGOLABILI

TAV. 283

Pos.	Cod.	Descrizione	Description	Description	Benennung	Descripcion
56	G16630410	PIGNONE Z-23 ZN.	PINION Z-23 ZN.	PIGNON Z-23 ZN.	RITZE Z-23 ZN.	PINION Z-23 ZN.
57	G16630420	PIGNONE Z-25 ZN.	PINION Z-25 ZN.	PIGNON Z-25 ZN.	RITZE Z-25 ZN.	PINION Z-25 ZN.
58	G16630430	PIGNONE Z-30 ZN.	PINION Z-30 ZN.	PIGNON Z-30 ZN.	RITZE Z-30 ZN.	PINION Z-30 ZN.
59	G16630720	RINCALZATORE ECON. COMPL				
60	G15430842	SUPPORTO RINCALZATORE LAT.				
61	G15431001	SUPPORTO RINCALZ.CENTRALE				
62	F01020514	VITE M12X1,75X40 U5739 8.8 ZN	BOLT M12X1,75X40	VIS M12X1,75X40	SCHRAUBE M12X1,75X40	TORNILLO M12X1,75X40
63	G15430891	SUPPORTO RUOTA DI PROFONDITA'	FROF. WHEEL SUPPORT	SUPPORT ROUE FROF.	HALTERUNG TIEFEN RAD	SOPORTE RUEDA FROF
64	G23440074	RASCHIATERRA RUOTA STERZ. HL	STEERING WHEEL SOIL-SCRAPER HL	RACLEUR ROUE BRAQUANTE HL	ERDSCHABER LENKRAD HL	RASCADOR TIERRA RUEDA ORIENTAB
65	F01410051	ROS.M8 8,4X 17X1,6 U6592 ZN	PLANE WASHER D.8	RONDELLE D.8	SCHEIBE D.8	ARANDELA D.8
66	F01020436	VITE M 8X1,25X 20 U5739 8.8 ZN	BOLT M 8X20	VIS M 8X20	SCHRAUBE M 8X20	TORNILLO M 8X20
67	F01020232	VITE M14X 2X200 U5737 8.8 ZN	BOLT 14X200 5737 8.G GALVANIZ.	VIS 14X200 5737 8.G ZN	SCHRAUBE 14X200 5737 8.G ZN	TORNILLO 14X200 5737 8.G ZN
68	G13610620	RUOTA COMPLETA 320X100 CRESTA	COMPL. WHEEL 320X100	ROUE COMPL. 320X100	RAD KOMPL. 320X100	RUEDA COMPL. 320X100
69	G23440072	RUOTA CON MOZZO HL	WHEEL- W/ HUB HL	ROUE AVEC MOYEU HL	RAD MIT NABE HL	RUEDA CON PERNO HL
70	F04010170	CUSC.D25 D52 B15 6205 2RS	BEARING 6205 2RS	ROULEMENT 6205 2RS	LAGER 6205 2RS	COJINETE 6205 2RS
71	F02050101	ANELLO E. DE 25X 1,2 U7435 C70	SEEGER RING E. 25X1,2 7435 C70	SEEGER E. 25X 1,2 U7435 C70	SEEGERING E. 25X 1,2 U7435 C70	ANILLO E. 25X 1,2 U7435 C70
72	G23430059	PERNO RUOTA	WHEEL PIN	PIVOT ROUE	RADZAPFEN	PERNO RUEDA
73	G18705130	ROND.FOND.12,5 X62 X1,5X11	BOTTOM WASHER 12.5 X 62 X 1.5	ROND. FOND. 12-5 X62 X1-5X11	BODENSCHEIBE 12-5 X62 X1-5X11	ARANDELA 12-5 X62 X1-5X11
74	F01410076	ROS.M12 13X 24X2,5 U6592 ZN	PLANE WASHER D12 UNI 6592 ZN	RONDELLE D12 UNI 6592 ZN	SCHEIBE D12 UNI 6592 ZN	ARANDELA D12 UNI 6592 ZN

TAV. 221

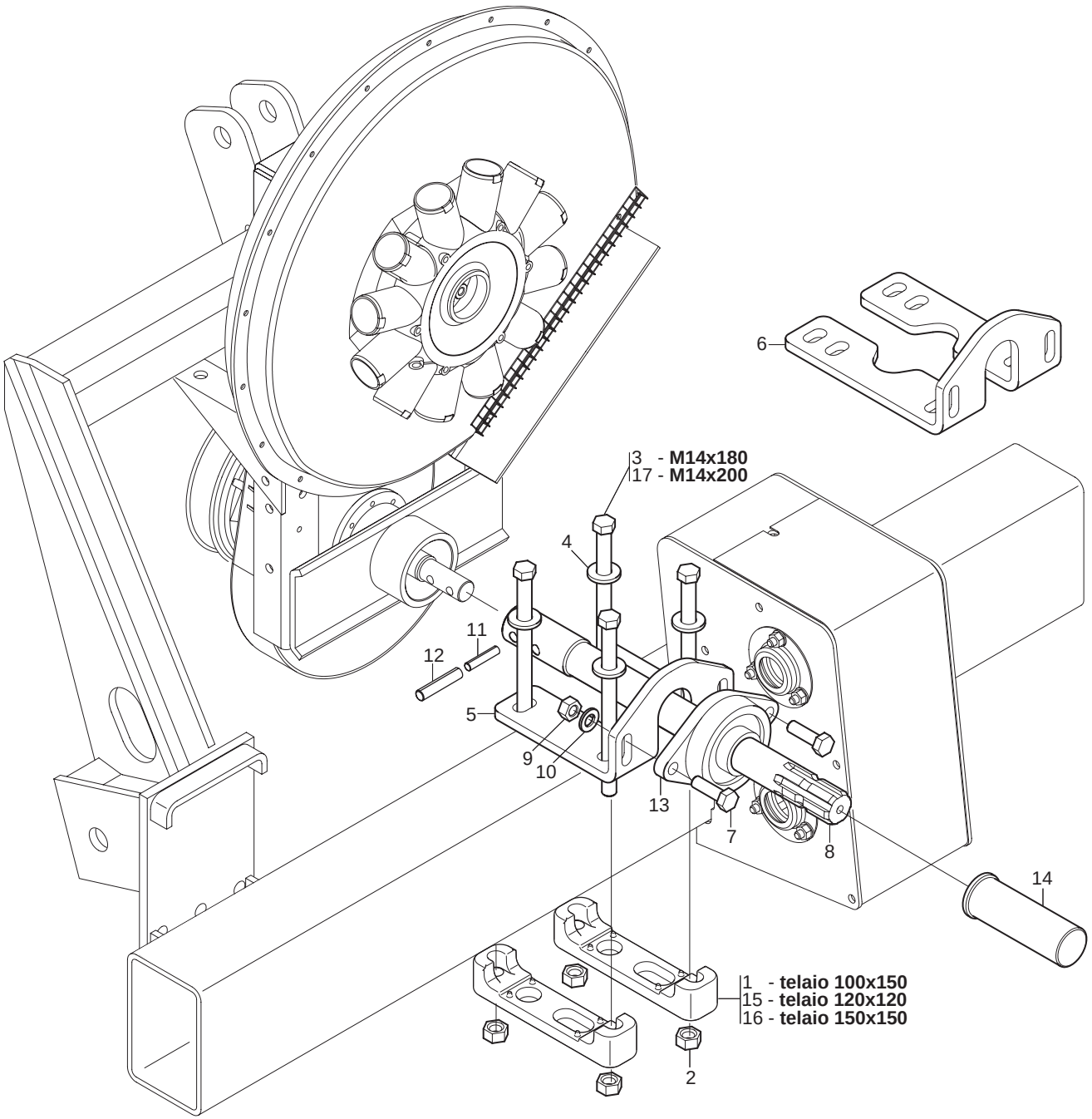

GASPARDO

PRESA DI POTENZA POSTERIORE

TAV. 221

Pos.	Cod.	Descrizione	Description	Description	Benennung	Descripcion
1	G19203820	SCONTRO FISS.100 2F D16,5				
2	F01200306	DADO M14X 2 U5588 6.8 ZN	NUT M14X2	ECROU M14X2	MUTTER M14X2	DADO M14X2
3	F01020229	VITE M14X 2X180 U5737 8.8 BR	SCREW 14X180 5737 8.G	VIS 14X180 5737 8.G	SCHRAUBE 14X180 5737 8.G	TORNILLO 14X180 5737 8.G
4	F01410088	ROS.M14 15X 28X2,5 U6592 ZN	WAS.M14 15X 28X2,5 U6592 ZB	RON.M14 15X 28X2,5 U6592 ZB	SCH.M14 15X 28X2,5 U6592 ZB	ARA.M14 15X 28X2,5 U6592 ZB
5	G14850040	SUPPORTO PDP POST. T.100	PDP REAR SUPPORT T.100	SUPPORT ARRIERE PDP T.100	HINT. HALTERUNG PDP T.100	SOPORTE TRASERO TDP T.100
6	G14850050	SUPPORTO PRESA DI POTENZA	PTO SUPPORT	SUPPORT PRISE DE FORCE	ZAPFWELLENHALTERUNG	SOPORTE TOMA DE FUERZA
7	F01020514	VITE M12X1,75X40 U5739 8.8 ZN	BOLT M12X1,75X40	VIS M12X1,75X40	SCHRAUBE M12X1,75X40	TORNILLO M12X1,75X40
8	G14850030	PRESA DI POTENZA POSTERIORE	REAR POWER TAKE-OFF	PRISE DE FORCE ARRI+RE	HINTERE LEISTUNGSABNAHME	TOMA DE FUERZA TRASERA
9	F01220048	DADO M12X1,75 D980 8 ZN	SELF LOCKING NUT M12X1,75 980V	ECROU AUTOBL. M12X1,75 980-V	SIEHE 00553312	DADO AUTOBL. M12X1,75 980-V
10	F01410076	ROS.M12 13X 24X2,5 U6592 ZN	PLANE WASHER D12 UNI 6592 ZN	RONDELLE D12 UNI 6592 ZN	SCHEIBE D12 UNI 6592 ZN	ARANDELA D12 UNI 6592 ZN
11	F02100121	SPINA E.P. 6X 40 U6873 C70 BR	ELASTIC PIN 6X40	GOUJON ELASTIQUE 6X40	SPANNHUELSE 6X40	PASADOR 6X40
12	F02100161	SPINA E.P. 10X 40 U6873 C70 BR	PIN EL. 10 X40 DIN 1481	FICHE EL. 10 X40 DIN 1481	SPANNSTIFT 10X40 DIN 1481	CLAVIJA EL.10 X40 DIN 1481
13	F04100139	SUPPORTO FY TB35 TF	SUPPORT FY TB35 TF	SUPPORT FY TB35 TF	HALTERUNG FY TP35 TF	SOPORTE FY TB35 TF
14	G66248227	CUFFIA PROTEZIONE P.D.P.	POWER TAKE-OFF PROTECTION HOUS	PROTECTEUR PRISE DE PUISSANCE	SCHUTZKASTEN KRAFTABTRIEB	ENVOLTURA PROTECCIN T. DE P. G
15	G14255000	SCONTRO 120	STRIKER 120	BUTEE 120	ANSCHLAG 120	ELEM. DE EMPALME 120
16	G19204030	SCONTRO FISS.150 2F D15				
17	F01020232	VITE M14X 2X200 U5737 8.8 ZN	BOLT 14X200 5737 8.G GALVANIZ.	VIS 14X200 5737 8.G ZN	SCHRAUBE 14X200 5737 8.G ZN	TORNILLO 14X200 5737 8.G ZN

TAV. 273

5.00-15 / 6.50/80-15 / 7.50/16-16

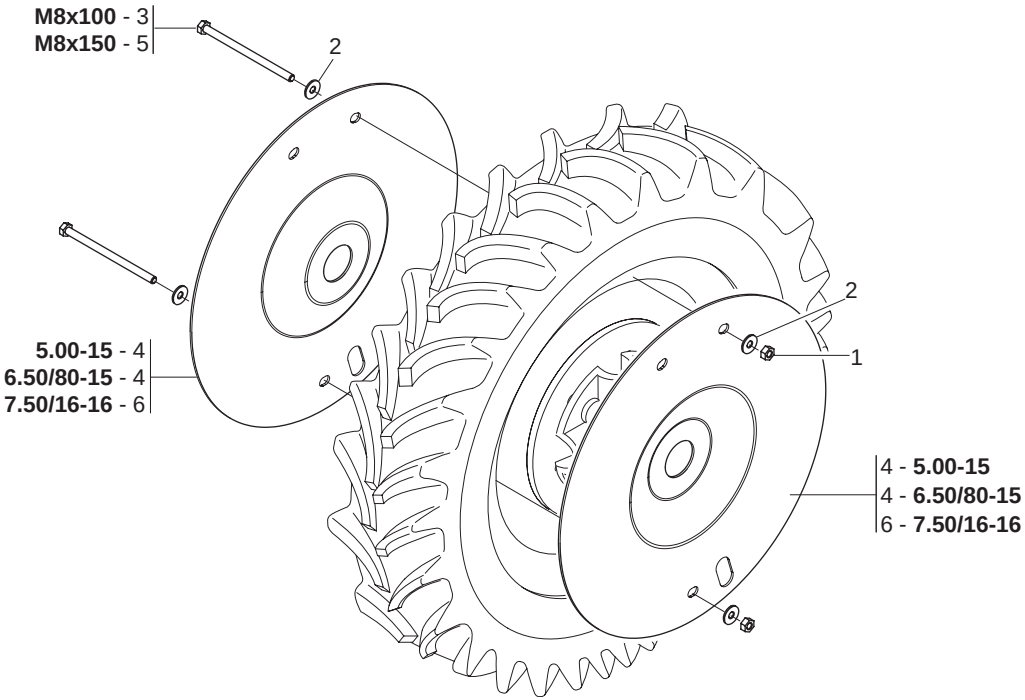

GASPARDO

KIT RUOTE PER TERRENI SASSOSI - FLANGIATURA RUOTE

TAV. 273

Pos.	Cod.	Descrizione	Description	Description	Benennung	Descripcion
1	F01220022	DADO M 8X1,25 D980 8 ZN	SELF LOCKING NUT M8X1,25 980V	ECROU AUTOBL. M8X1,25 980-V	SELBSTSP.MUTT. M8X1,25 980-V	DADO AUTOBL. M8X1,25 980-V
2	F01420048	ROS.M8 8,4X 24X 2 U6593 ZN	PLANE WASHER D.8	RONDELLE D.8	SCHEIBE D.8	ARANDELA D.8
3	F01020090	VITE M8X1,25X100 U5737 8.8 ZN	BOLT 8 X100 5737 8.G GALVANIZ.	VIS 8 X100 5737 8.G ZN	SCHRAUBE 8 X100 5737 8.G ZN	TORNILLO 8 X100 5737 8.G ZN
4	G14830221	DISCO PROTEZIONE SASSI	DISK STONE PROTECTION	DISQUE PROTECTION SOLS GRAVELE	STEINSCHUTZ-SCHEIBE	DISCO PROTECIËN PIEDRAS
5	F01020097	VITE M8X1,25X150 U5737 8.8 ZN	SCREW 8X150 5737 8.G GALVANIZ.	VIS 8 X150 5737 8.G ZN	SCHRAUBE 8 X150 5737 8.G ZN	TORNILLO 8 X150 5737 8.G ZN
6	G15231910	DISCO PROTEZIONE SASSI R7.50				

TAV. 244

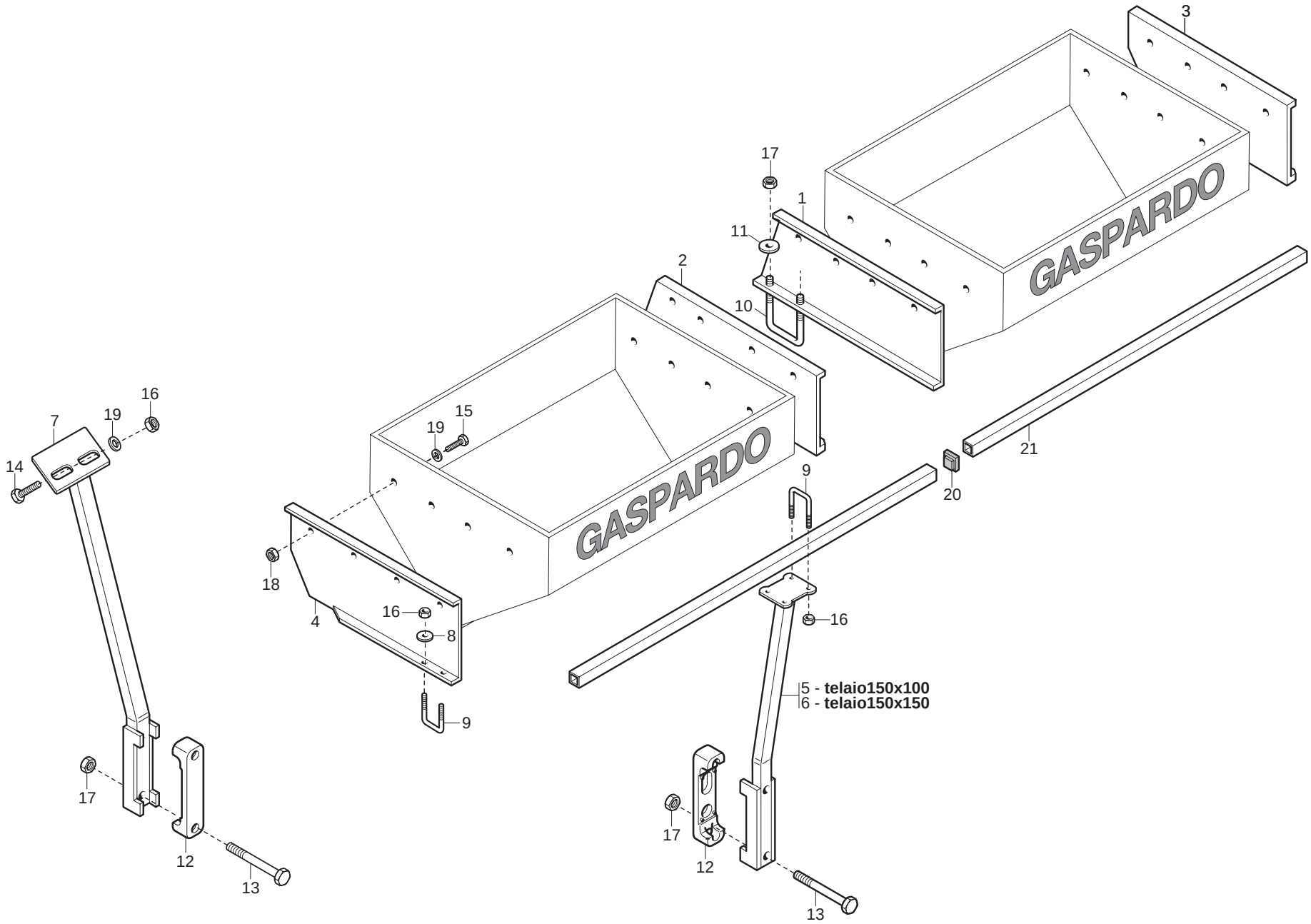
3
17
1
11
2
10
16
7
19
15
19
14
21
9
20
18
4
16
8
16
5 - **telaio150x100**
6 - **telaio150x150**
9
17
12
13
17
12
13

SUPPORTI SERBATOI SPANDICONCIME FERRO

TAV. 244

Pos.	Cod.	Descrizione	Description	Description	Benennung	Descripcion
1	G15470632	SUPP.SPANDI CENTR.DX				
2	G15470642	SUPP.SPANDI CENTR.SX				
3	G15171380	SUPPORTO ESTERNO SPANDI DX	MAN.SPR. EXT. RIGHT SUPPORT	SUPPORT EXT. DRT. EP. ENGRAIS	RECHTE ZUSSERE HALTER.DsNGERST	SOPORTE EXT.DER. ABONADORA .
4	G15171390	SUPPORTO ESTERNO SPANDI SX	MAN.SPR.EXT.LEFT SUPPORT	SUPPORT EXT. GCH. EP. ENGRAIS	LINKER ZUSSERE HALTER.DsNGERST	SOPORTE EXTERIOR IZQ.ABONADORA
5	G16670011	SUPPORTO SPANDI	SPREADER SUPPORT	SUPPORT +PANDEUR	HALTERUNG SPANDI	SOPORTE ABONADORA
6	G15472901	SUPPORTO SPANDI Q.150	SQ. FERTILIZER SPREADER SUPPOR	SUPPORT +PANDEUR CARR+ 150	HALTERUNG SPANDI Q.150	SOPORTE ABONADORA Q.150
7	G15473051	SUPPORTO SERBATOIO ANT.	FRONT HOPPER SUPPORT	SUPPORT TR+MIE AVANT	HALTERUNG VORDERER BEH-LTER	SOPORTE DEPËSITO ANT.
8	G18701140	RONDELLA 11 X35 X5	WASHER 11 X 35 X 5	RONDELLE 11 X35 X5	UNTERLEGSCHEIBE 11 X35 X5	ARANDELA 11 X35 X5
9	F20110706	CAV.Q.M10X 1,5X 30 47X 60 ZN	DISK SUPPORT.ELEMENT U BOLT SV	CAVALIER SUPPORT DISQUE SV	VERBINDUNG SCHEIBENHALTERUNG S	PERNO EN U SOP. DISCO SV
10	F20110770	CAV.Q.M14X 2X 50 96X119 ZN	U-BOLT M14X96 - 119 ZN	CAVALIER M14X96 - 119 ZN	VERBINDUNG M14X96 - 119 ZN	PERNO EN U M14X96 - 119 ZN
11	G18700690	RONDELLA 15 X40 X6 ZN	WASHER 15 X 40 X 6 ZN	RONDELLE 15 X40 X6 ZN	UNTERLEGSCHEIBE 15 X40 X6 ZN	ARANDELA 15 X40 X6 ZN
12	G19204030	SCONTRO FISS.150 2F D15				
13	F01020238	VITE M14X 2X240 U5737 8.8 BR	BOLT M 14 X240 5737 8.G	VIS M 14 X240 5737 8.G	SCHRAUBE M 14 X240 5737 8.G	TORNILLO M 14 X240 5737 8.G
14	F01020463	VITE M10X1,5 X25 U5739 A2 IX	SCREW 10X25 5739 INOX A2	VIS 10X25 5739 INOX A2	SCHRAUBE 10X25 5739 INOX A2	TORNILLO 10X25 5739 INOX A2
15	F01020465	VITE M10X1,5 X35 U5739 A2 IX	SCREW 10X35 5739 INOX A2	VIS 10X35 5739 INOX A2	SCHRAUBE 10X35 5739 INOX A2	TORNILLO 10X35 5739 INOX A2
16	F01200271	DADO M10X 1,5 U5588 A2 IX	NUT 10 5588 6.8 INOX	ECROU 10 5588 6.8 INOX	MUTTER 10 5588 6.8 INOX	TUERCA 10 5588 6.8 INOX
17	F01200306	DADO M14X 2 U5588 6.8 ZN	NUT M14X2	ECROU M14X2	MUTTER M14X2	DADO M14X2
18	F01200271	DADO M10X 1,5 U5588 A2 IX	NUT 10 5588 6.8 INOX	ECROU 10 5588 6.8 INOX	MUTTER 10 5588 6.8 INOX	TUERCA 10 5588 6.8 INOX
19	F01420059	ROS.M10 10,5X 30X2,5 U6593 IX	WASHER 11X30X2,5 6593 A2	RONDELLE 11X30X2,5 6593 A2	UNTERLEGSCHEIBE 11X30X2,5 6593	ARANDELA 11X30X2,5 6593 A2
20	F20120346	PUNTALE Q 35 ALETT.POLIT.NERO				
21	G15472970	TUBO Q. 35X 4X1200	SQUARE PIPE 35 X4 X1200	TUBE CARRE 35 X4 X1200	VIERKANTROHR 35 X4 X1200	TUBO CUADRADO 35 X4 X1200

TAV. 251

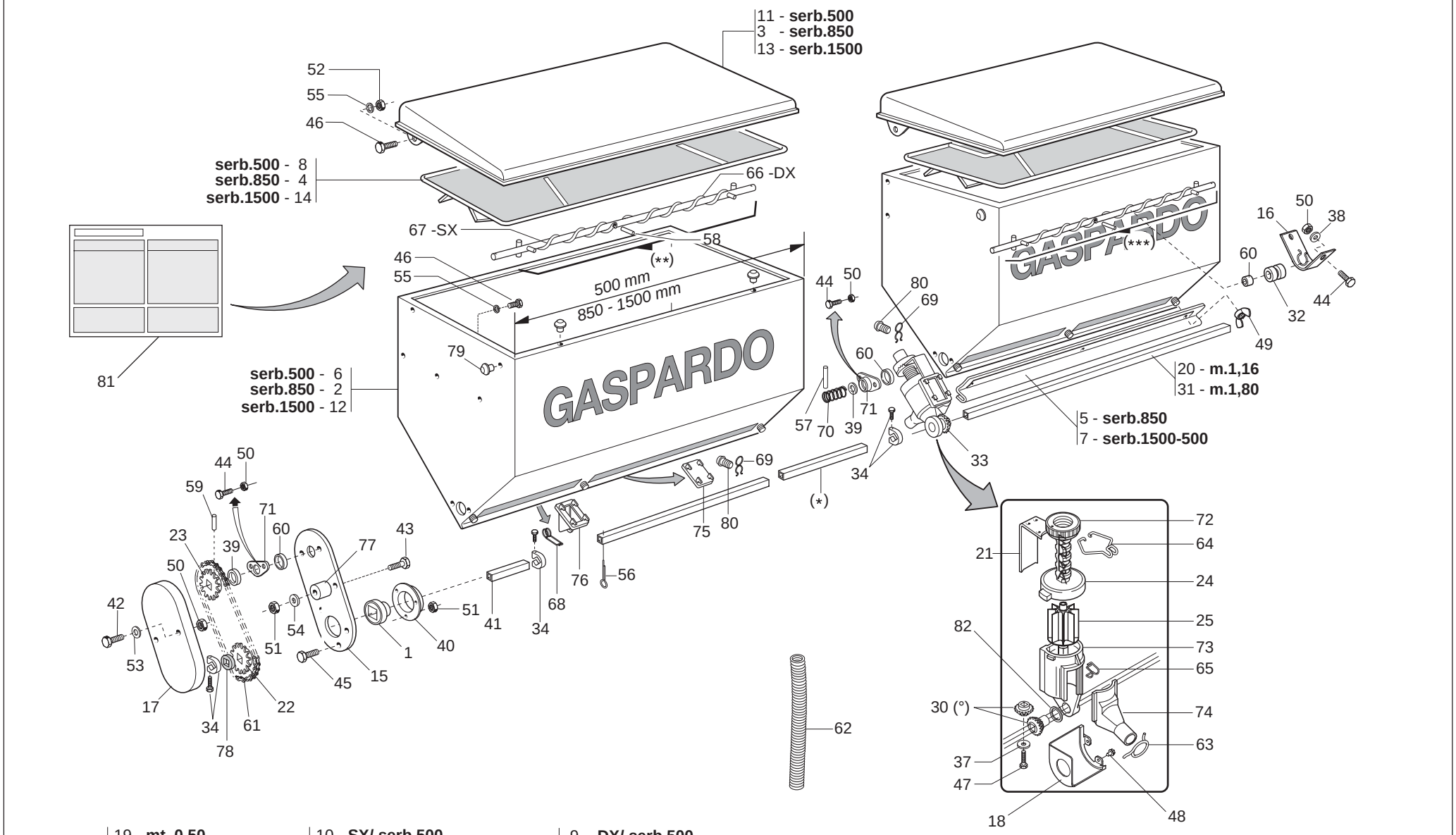

	19 - **mt. 0,50**		10 - **SX/ serb.500**		9 - **DX/ serb.500**
*	36 - **mt. 1,18**	**	27 - **SX/ serb.850**	***	26 - **DX/ serb.850**
	35 - **mt. 1,375**		29 - **SX/ serb.1500**		28 - **DX/ serb.1500**

(°) Kit ingranaggi cod. 20860126 (2+2 pezzi)

SERBATOI SPANDICONCIME FERRO

TAV. 251

Pos.	Cod.	Descrizione	Description	Description	Benennung	Descripcion
1	G14830390	CUSCINETTO FORO QUADRO	SQUARE-HOLED BEARING	ROULEMENT AL+SAGE CARR+	VIERKANTLAGER	COJINETE ORIFICIO CUADRADO
2	G15470500	SERBATOIO CONCIME 850	MANURE TANK 850	RESERVOIR ENGRAIS 850	DsNGERBEHZLTER 850	DEPSITO ABONO 850 B
3	G15470580	COPERCHIO SERBATOIO 850	TANK TOP 850	COUVERCLE RESERVOIR 650	BEHZLTERDECKEL 850	TAPA DEPSITO 850 A
4	G15470700	GRIGLIA 850	GRID 850	GRILLE 850	GITTER 850	REJILLA 850
5	G15470780	PORTA DI PULIZIA SERB.850	TANK 850 CLEANING DOOR	PORTE DE NETTOYAGE RESERVOIR 8	REINIGUNGSTsR BEHZLTER 850	PUERTA DE LIMPIEZA DEPS. 850 P
6	G15471010	SERBATOIO CONCIME 500	FERTILIZER TANK 500	RESERVOIR ENGRAIS 500	DsNGERBEHZLTER 500	DEPSITO ABONO 500 B
7	G15471040	PORTA DI PULIZIA	CLEANING DOOR	PORTE DE NETTOYAGE	REINIGUNGSTsR	PUERTA LIMPIEZA
8	G15471090	GRIGLIA 500	GRID 500	GRILLE 500	GITTER 500	REJILLA 500
9	G15471120	ASSE AGITAT.DX SERBATOIO 500	RIGHT TANK STIRRER SPINDLE 500	AXE AGIT. DRT RESERVOIR 500	ACHSE SAMENMISCHER RE BEHZLTER	EJE AGITADOR DER DEPSITO 500 A
10	G15471130	ASSE AGITAT. SX SERBATOIO 500	LEFT TANK STIRRER SPINDLE 500	AXE AGIT. GCH RESERVOIR 500	ACHSE SAMENMISCHER LI BEHZLTER	EJE AGITADOR IZQ DEPSITO 500 A
11	G15471140	COPERCHIO SERBATOIO 500	TANK COVER 500	COUVERCLE RESERVOIR 500	BEHZLTERDECKEL 500	TAPA DEPSITO 500 A
12	G15471280	SERBATOIO CONCIME 1500	FERTILIZER TANK 1500	RESERVOIR ENGRAIS 1500	DsNGERBEHZLTER 1500	DEPSITO ABONO 1500 B
13	G15471320	COPERCHIO SERBATOIO 1500	TANK COVER 1500	COUVERCLE RESERVOIR 1500	BEHZLTERDECKEL 1500	TAPA DEPSITO 1500 A
14	G15471390	GRIGLIA 1500	GRID 1500	GRILLE 1500	GITTER 1500	REJILLA 1500
15	G15471930	PROTEZIONE	GUARD	PROTECTION	SCHUTZ	PROTECCIN P
16	G15471990	SUPPORTO COCLEA	SCREW SUPPORT	SUPPORT VIS ALIMENTATION	HALTERUNG SCHNECKE	SOPORTE CCLEA S
17	G19002710	PROTEZ.RINVIO SPANDICONCIME	FERTILIZER TRANSM. PROTECTION	PROTECTION RENVOI FERTILISEUR	SCHUTZ VORGELEGE DUNGERSTREUER	PROTECCION TRANSMISION ABONADO
18	G19002850	PROTEZIONE PIGNONE	PINION GUARD	PROTECTION PIGNON	RITZELSCHUTZ	PROTECCIN PI¾N PR
19	G20860012	MANICOTTO DI UNIONE L.500	JOINT SLEEVE L.500	MANCHON DE RACCORD L. 500	VERBINDUNGSMUFFE L.500	MANGUITO DE UNIN L.500 M
20	G20860008	ASSE LATO CAMBIO 2 F. L.1160	GEARBOX SIDE SPINDLE- 2-ROW L.	AXE COTE BOITE DE VITESSE	ACHSE GETRIEBESEITE 2 R. L. 11	EJE LADO CAMBIO 2 FIL. L.1
21	G20860052	REGOLATORE APERTURA	OPENING REGULATOR	REGULATEUR OUVERTURE	TFFNUNGSEINSTELLER	REGULADOR ABERTURA
22	G20860086	INGRANAGGIO 1/2 Z-12 F.Q.	GEAR 1/2 Z-12 F.Q.	ENGRENAGE 1/2 Z-12 TROUS CARRE	ZAHNRAD 1/2 Z-12 F.Q.	ENGRANAJE 1/2 Z-12 F.Q.
23	G20860088	INGRANAGGIO 1/2 Z-12 F.T.	GEAR 1/2 Z-12 F.T.	ENGRENAGE 1/2 Z-12 TROUS RONDS	ZAHNRAD 1/2 Z-12 F.T.	ENGRANAJE 1/2 Z-12 F.T.
24	G20860093	VITE DI REGOL.	ADJUSTMENT BOLT	VIS DE REGLAGE	EINSTELLSCHRAUBE.	TORNILLO DE REGULACIN S
25	G20860106	DOSATORE SPANDI 8 PALE COMPL.	FERT.METERING DEVICE ASS.8 GRO	ROTOR DOSEUR 8C FERTI	DOSIERER DUNGER.KOMPL. 8 SEKT	DOSIFICADOR ABONO COMP.8 SECT
26	G20860121	ASSE AGITAT.DX SERB.850 COMPL.	STIRRER SPINDLE- RIGHT 850 TAN	AXE AGITATEUR DRT. RESERVOIR 8	SAMENMISCHERACHSE RE BEH.850	EJE AGITAD. DER. DEPS.850 COMA
27	G20860122	ASSE AGITAT.SX SERB.850 COMPL.	STIRRER SPINDLE- LEFT 850 TANK	AXE AGITATEUR GCH. RESERVOIR 8	SAMENMISCHERACHSE LI BEH.850	EJE AGITAD. IZQ. DEPS. 850 COA
28	G20860123	AGIT.DX SERB.1500 3-4 USC.COMP	RIGHT 1500 TANK STIRRER- 3-4 O	AGITATEUR DRT. RESERVOIR 1500	SAMENMI. RE BEH.1500 3-4AUSG.	AGIT. DER. DEPS. 1500 3-4 SALA
29	G20860124	AGIT.SX SERB.1500 3-4 USC.COMP	LEFT 1500 TANK STIRRER- 3-4 OU	AGITATEUR GCH. RESERVOIR 1500	SAMENMI. LI BEH.1500 3-4 AUSG.	AGIT. IZQ. DEPS. 1500 3-4 SALA
30	G20860126	KIT INGR DISTR CONCIME (2+2)	KIT- MAN. DISTR. GEARS	COUPLE CON DISTR ENGRAIS (2+2)	KIT ZAHNRZDER DsNGERSTREUER	SET ENGRANAJES DISTRIB. ABONO
31	G20870028	ASSE SERB.LATO TRAS.6F.L.1800	AXLE- GEARBOX SIDE- 6-ROW L.18	AXE RESERVOIR COTE ENTRAINEMEN	ACHSE BEHZLTER ANTRIEBSS. 6F.L	EJE DEPS. LADO TRANS. 6 FILA A
32	G19005040	BOCCOLA ASSE SPANDI	FERT. SPREADER AXLE BUSH	DOUILLE AXE +PANDEUR	ACHSENBUCHSE STREUER	MANGUITO -RBOL ABONADORA
33	G20880044	DISTR.COMPL.8PALE SPANDI FE	COMPL.IRON FERTIL.DISTR.8 RIBS	MINIMAX COMPL 8C FER	KOMPL.DOSIER.MET.DÜNGERSTR.8S	DISTR.COMP.ABONO HIER.8ALETAS
34	G22505085	FERMO ASSE IN LAMIERA	PLATE AXLE STOP	ARRET AXE EN TOLE	FESTSTELLVORRICHTUNG BLECHACHS	BLOQUEO EJE DE CHAPA
35	G20910044	MANICOTTO UNIONE L.1375	JOINT SLEEVE L.1375	MANCHON RACCORD L. 1375	VERBINDUNGSMUFFE L.1375	MANGUITO DE UNIN L.1375 M
36	G20910045	MANICOTTO UNIONE L.1180	JOINT SLEEVE L.1180	MANCHON RACCORD L. 1180	VERBINDUNGSMUFFE L.1180	MANGUITO DE UNIN L.1180 M
37	G20970097	RONDELLA 32X3X4,5	WASHER 32X3X4-5	RONDELLE 32X3X4-5	UNTERLEGSCHEIBE 32X3X4-5	ARANDELA 32X3X4-5
38	G20970125	RONDELLA 28X2,5X6,5	WASHER 28X2-5X6-5	RONDELLE 28X2-5X6-5	UNTERLEGSCHEIBE 28X2-5X6-5	ARANDELA 28X2-5X6-5
39	G22220073	RONDELLA 28X0,3X16,5	WASHER 28X0-3X16-5	RONDELLE 28X0-3X16-5	UNTERLEGSCHEIBE 28X0-3X16-5	ARANDELA 28X0-3X16-5
40	G22230094	SUPPORTO CUSCINETTO	BEARING SUPPORT	SUPPORT PALIER	LAGERBsCHSE	SOPORTE COJINETE
41	G22250287	MANICOTTO DISTANZIALE SV	SPACER SLEEVE SV	MANCHON ENTRETOISE SV	ABSTANDSMUFFE SV	MANGUITO DISTANCIADOR SV
42	F01020043	VITE M 6X 1X 60 U5737 8.8 ZN	BOLT 6 X60 5737 8.G GALVANIZED	VIS 6 X60 5737 8.G ZN	SCHRAUBE 6 X60 5737 8.G ZN	TORNILLO 6 X60 5737 8.G ZN
43	F01020068	VITE M 8X1,25X40 U5737 8.8 ZN				
44	F01020419	VITE M 6X1 X 16 U5739 A2 IX	BOLT M6 X1 X 16 U5739 8.8 IX	VIS M6 X1 X 16 U5739 8.8 IX	SCHRAUBE M6 X1 X 16 U5739 8.	TORNIL. M6 X1 X 16 U5739 8.8
45	F01020432	VITE M 8X1,25X16 U5739 8.8 ZN	BOLT M 8X16	VIS M 8X16	SCHRAUBE M 8X16	TORNILLO M 8X16
46	F01020463	VITE M10X1,5 X25 U5739 A2 IX	SCREW 10X25 5739 INOX A2	VIS 10X25 5739 INOX A2	SCHRAUBE 10X25 5739 INOX A2	TORNILLO 10X25 5739 INOX A2
47	F01070075	VIT.A.4,2X1,41X 38 6954 4.8NI	BOLT 4-2X38 DIN 7981	VIS 4-2X38 DIN 7981	SCHRAUBE 4-2X38 DIN 7981	TORNILLO 4-2X38 DIN 7981
48	F01070011	VIT.A.4,2X1,41X 9,5 6950 4.8NI	BOLT- SELF-TAPPING 4-2X9-5T.E.	VIS AUTOTAR. 4-2X9-5 T. E. COU	SELBSTSCHNEID. SCHRAUBE 4-2X9-	TORNILLO AUTORROSC. 4-2X9-5
49	F01240012	DADO M 6X 1 U5448 5.8 ZN	NUT 6 UNI 5448 5.8 ZN	ECROU 6 UNI 5448 5.8 ZN	MUTTER 6 UNI 5448 5.8 ZN	TUERCA 6 UNI 5448 5.8 ZN
50	F01200233	DADO M 6X 1 U5588 A2 IX	NUT M 6X 1 U5588 IX	ECROU M 6X 1 U5588 I	MUTTER M 6X 1 U5588	TUERCA M 6X 1 U5588
51	F01200244	DADO M 8X1,25 U5588 6.8 ZN	NUT M8	ECROU M8	MUTTER M8	DADO M8
52	F01200271	DADO M10X 1,5 U5588 A2 IX	NUT 10 5588 6.8 INOX	ECROU 10 5588 6.8 INOX	MUTTER 10 5588 6.8 INOX	TUERCA 10 5588 6.8 INOX
53	F01410037	ROS.M6 6,4X12,5X1,6 U6592 ZN	PLANE WASHER D.6	RONDELLE D.6	SCHEIBE D.6	ARANDELA D.6
54	F01410051	ROS.M8 8,4X 17X1,6 U6592 ZN	PLANE WASHER D.8	RONDELLE D.8	SCHEIBE D.8	ARANDELA D.8
55	F01420059	ROS.M10 10,5X 30X2,5 U6593 IX	WASHER 11X30X2,5 6593 A2	RONDELLE 11X30X2,5 6593 A2	UNTERLEGSCHEIBE 11X30X2,5 6593	ARANDELA 11X30X2,5 6593 A2

TAV. 251

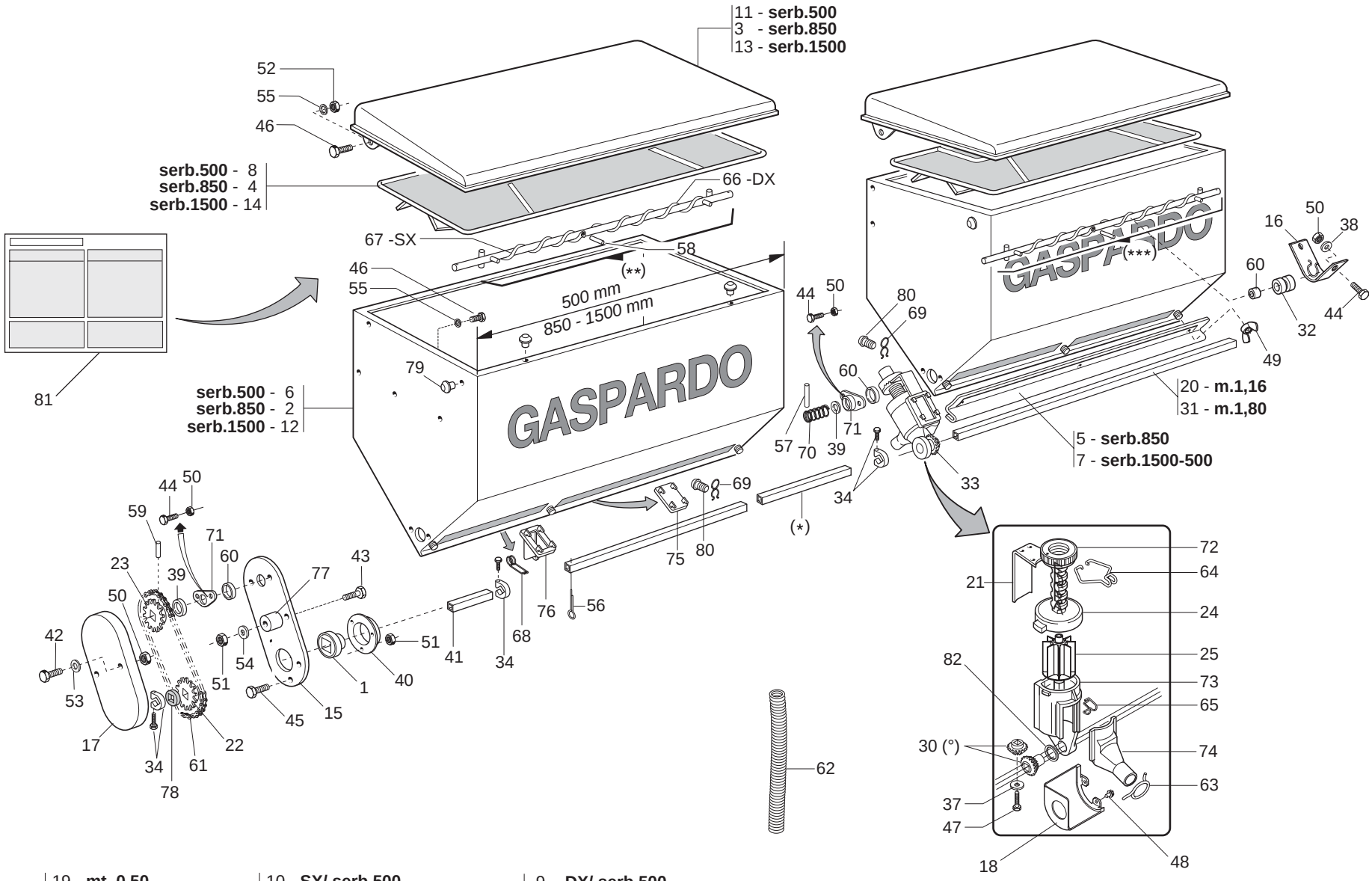

	19 - **mt. 0,50**		10 - **SX/ serb.500**		9 - **DX/ serb.500**
*	36 - **mt. 1,18**	**	27 - **SX/ serb.850**	***	26 - **DX/ serb.850**
	35 - **mt. 1,375**		29 - **SX/ serb.1500**		28 - **DX/ serb.1500**

(°) Kit ingranaggi cod. 20860126 (2+2 pezzi)

SERBATOI SPANDICONCIME FERRO

TAV. 251

Pos.	Cod.	Descrizione	Description	Description	Benennung	Descripcion
56	F02200227	COPIGLIA 5X 30 U1336 ZN	SPLIT PIN 5 X30 1336 GALVAN.	GOUPILLE 5 X30 1336 ZN	SPLINT 5 X30 1336 ZN	PASADOR 5 X30 1336 ZN
57	F02100079	SPINA E.P. 5X 16 U6873 C70 BR				
58	F02100089	SPINA E.P. 5X 36 U6873 C70 BR	PIN EL. 5 X36 DIN 1481	FICHE EL. 5 X36 DIN 1481	SPANNSTIFT 5 X36 DIN 1481	CLAVIJA EL.5 X36 DIN 1481
59	F02100114	SPINA E.P. 6X 30 U6873 C70 BR	ELASTIC PIN 6X30	GOUJON ELASTIQUE 6X30	SPANNHUELSE 6X30	ESPINA ELASTICA 6X30
60	F03011081	GUARNIZIONI LABBRO DE100				
61	F06080196	CATENA 1/2 ISO 083 32 MAGLIE	CUT-DOWN CHAIN .1/2 ISO 083 32	TRONCON CHAINE 1/2 ISO 083 32	KETTENLZNGE 1/2 ISO 083 32 GL	TRECHO CADENA 1/2 ISO 083 32
62	F03100500	TUBO EOLO 35 PU	EOLO PIPE 35 PU	TUBE EOLO 35 PU	ROHR EOLO 35 PU	TUBO EOLO 35 PU
63	G65336025	MOLLA SPEC.ZN STRINGIT.ASP.SP	SPEC SPRING ZN FAN . PIPE CLAM	RESSORT SPEC. ZN SERRE-TUBE AS	SPEZIALFEDER ZN RORHSCHELLE AB	MUELLE ESPEC. ZN APRIETA TUBOS
64	G65336055	MOLLA SPEC.REGOL.SPAND. SP	SPEC SPRING MAN. SPR. ADJUSTM.	RESSORT SPEC. REGL. EP. ENTRAI	SPEZIALFEDER STREUEREINSTELLUN	MUELLE ESPEC. REGUL. ABONADORA
65	G65336062	MOLLA SPEC.SCIV.DISTR.SPAND.SP	SPEC SPRING - MAN. SPR. DISTR.	RESS. SPEC. LANCOIR DISTR. EP.	SPEZ.FEDER RUTSCHE SZAPP. STRE	MUELLE ESPEC.PLANO INCL.DISTR.
66	G65336064	MOLLA SPEC.COCLEA DX SPAND.HL	SPEC. WORM SCREW SPRING RIGHT	RESSORT SPEC. VIS DRT. EP. ENG	SPEZ.FEDER RE SCHNECKE STREUER	MUELLE ESPEC. TORN.S/F DER. AB
67	G65336065	MOLLA SPEC.COCLEA SX SPAND.HL	SPEC. WORM SCREW SPRING LEFT M	RESSORT SPEC. VIS GCH. EP. ENG	SPEZ.FEDER LI SCHNECKE STREUER	MUELLE ESPEC. TORN.S/F IZQ. AB
68	G65336080	MOLLA SPEC.SCARICO SPAND.T.M.	SPEC.SPRING- MAN. SPR. DISCHAR	RESSORT SPEC. DECHARGEMENT FER	SPEZIALFEDER STREUERENTLADUNG	MUELLE ESPEC. DESCARGA ABONAD.
69	G65336089	MOLLA SPEC.TENUTA FERMO SPAND.	SPEC.SPRING- BLOCK. MAN. SPR.	RESSORT SPEC. D'ETANCHEITE ARR	SPEZIALFEDER DICHTUNG STREUER	MUELLE ESPEC. RETENC. BLOQ
70	G65338043	MOLLA COMP.ZN SERB. M80	ZN TANK COMP.SPRING M80	RESSORT COMPL. ZN RESERVOIR M8	DRUCKFEDER ZN BEHZLTER M80	MUELLE COMP.ZN DEPS. M80 A
71	G66248121	BOCCOLA CON FLANGIA M80	BUSHING W/ FLANGE M80	SUPPORT AVEC BRIDE M80	BsCHSE MIT FLANSCH M80	CASQUILLO CON BRIDA M80
72	G66248125	GHIERA REGOLAZIONE M80	ADJUSTMENT KNURLED NUT M80	BAGUE REGLAGE M80	EINSTELLMUTTER M80	CONTRATUERCA REGULACIN M80 G
73	G66248176	CORPO DISTR.SPAND. SP	MANURE SPREADER DISTR. CASING	CORPS DISTRIB. EP. ENGRAIS SP	VERTEILUNGSKTRPER STREUER SP	CUERPO DISTR. ABON. SP
74	G66248178	SCIVOLO DISTR.SPAND. SP	CHUTE- MANURE-SPREADER DISTRIB	LANCOIR DISTRIBUTION EP. ENGR.	DsNGERSTREUER RUTSCHE SP	PLANO INCLINADO DISTR. ABON. S
75	G66248184	CHIUSURA USCITA SERB.SPAND.SP	OUTLET CLOSURE- MAN.SPREAD. TA	FERMETURE SORTIE RESERVOIR FER	VERSCHLUSS AUSTRITT DsNGERSTR.	CIERRE SALIDA DEPS. ABON. SP I
76	G66248187	SCARICO SERB.SPAND.TIPO MICRO	MICRO TYPE MAN.SPR.TANK DISCH.	TRAPPE DE VIDANGE TYPE MICRO	BEHZLTERENTLADUNG STREUER TYP	DESCARGA DEPS. ABON.TIPO MICRD
77	G66248207	TENDICATENA SPAND. SP-520	CHAIN TENSIONER	TENDEUR DE CHAINE EPAND. ENGR.	KETTENSPANNER DsNGERSTR. SP-52	TENSOR DE CADENA ABON. SP-520
78	G66248218	RONDELLA DISTAN.SPAND.	MAN. SPR. SPACER WASHER	RONDELLE ENTRETOISE EP. ENGRAI	ABSTANDSCHEIBE DsNGERSTREUER	ARANDELA DISTAN.ABONAD.
79	G66248223	TAPPO SUPP.SPAND.D.11	PLUG MAN. SPR. SUPP. D.11	BOUCHON SUPPORT EP. ENGRAIS D.	HALTERUNGSPFROPFEN DsNGERSTR.	TAPN SOPORTE ABON.D.11 D
80	G66248224	FERMO DISTRIBUTORE SPAND.	FERT. SPR. DISTRIB. STOP	ARRET DISTRIBUTEUR EP. ENGRAIS	FESTSTELLVORRICHTUNG SZAPP. ST	BLOQUEO DISTRIBUIDOR ABON.
81	G19700821	TABELLA CONCIME SP540	FERTILIZER CHART STICKER	DECALC. TABLEAU DE ENGRAIS	ABZIEHB. TABELLE D_NGER	CAL.TABLA ABONO
82	G18701500	RONDELLA 29,5 X38 X0,3	WASHER 29,5 X 38 X 0,3	RONDELLE 29,5 X38 X0,3	UNTERLEGSCHEIBE 29,5X38X0,3	ARANDELA 29,5 X38 X0,3

TAV. 143

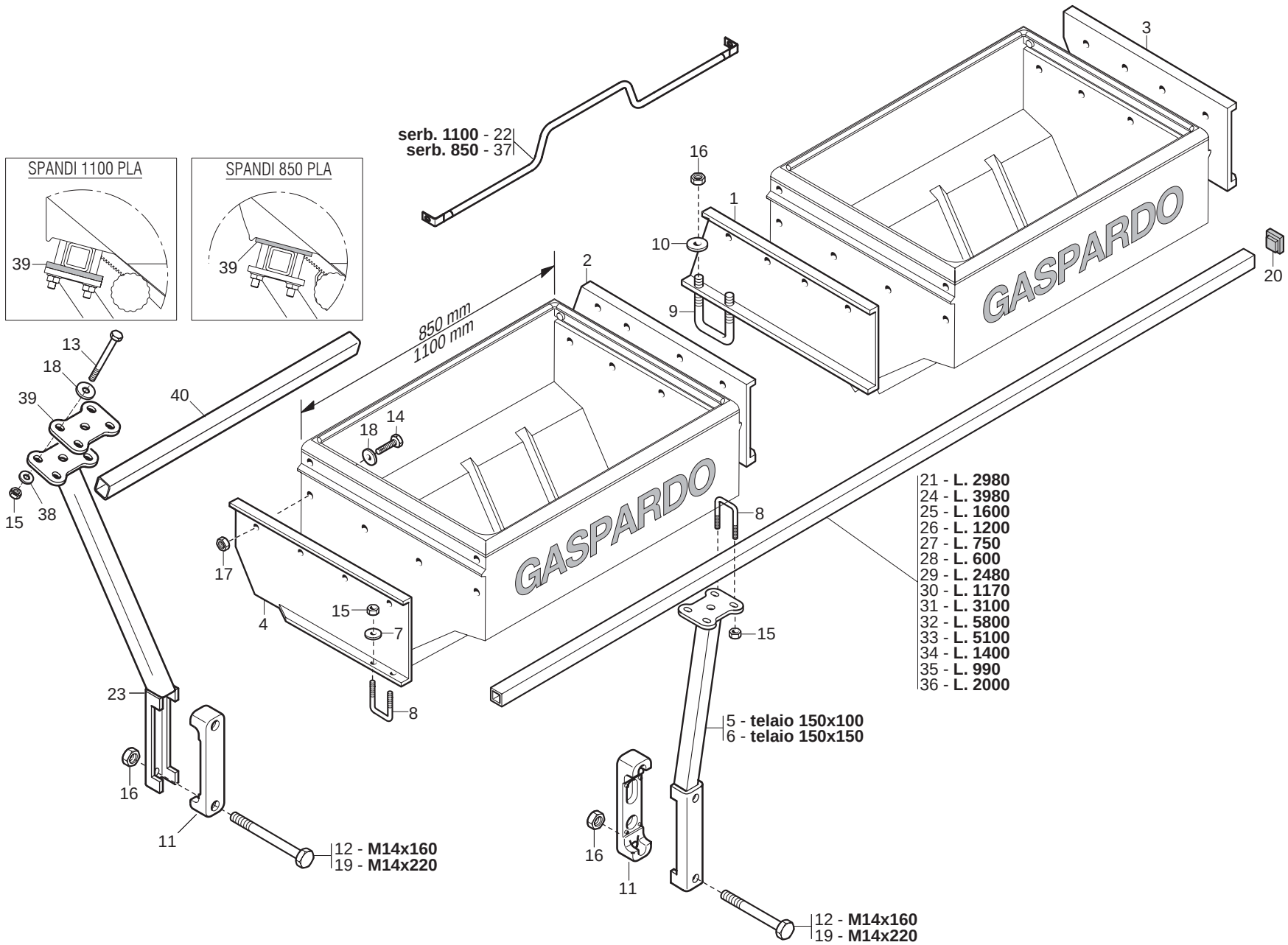
SPANDI 1100 PLA
SPANDI 850 PLA
39
39
serb. 1100 - 22
serb. 850 - 37
850 mm
1100 mm
GASPARDO
GASPARDO
3
16
1
10
9
2
20
13
18
39
40
14
18
15
38
17
4
15
7
8
8
15
23
16
11
12 - M14x160
19 - M14x220
21 - L. 2980
24 - L. 3980
25 - L. 1600
26 - L. 1200
27 - L. 750
28 - L. 600
29 - L. 2480
30 - L. 1170
31 - L. 3100
32 - L. 5800
33 - L. 5100
34 - L. 1400
35 - L. 990
36 - L. 2000
5 - telaio 150x100
6 - telaio 150x150
16
11
12 - M14x160
19 - M14x220

SUPPORTI SERBATOI SPANDICONCIME PLASTICA

TAV. 143

Pos.	Cod.	Descrizione	Description	Description	Benennung	Descripcion
1	G15470632	SUPP.SPANDI CENTR.DX				
2	G15470642	SUPP.SPANDI CENTR.SX				
3	G15171380	SUPPORTO ESTERNO SPANDI DX	MAN.SPR. EXT. RIGHT SUPPORT	SUPPORT EXT. DRT. EP. ENGRAIS	RECHTE ZUSSERE HALTER.DsNGERST	SOPORTE EXT.DER. ABONADORA .
4	G15171390	SUPPORTO ESTERNO SPANDI SX	MAN.SPR.EXT.LEFT SUPPORT	SUPPORT EXT. GCH. EP. ENGRAIS	LINKER ZUSSERE HALTER.DsNGERST	SOPORTE EXTERIOR IZQ.ABONADORA
5	G16670011	SUPPORTO SPANDI	SPREADER SUPPORT	SUPPORT +PANDEUR	HALTERUNG SPANDI	SOPORTE ABONADORA
6	G15472901	SUPPORTO SPANDI Q.150	SQ. FERTILIZER SPREADER SUPPOR	SUPPORT +PANDEUR CARR+ 150	HALTERUNG SPANDI Q.150	SOPORTE ABONADORA Q.150
7	G18701140	RONDELLA 11 X35 X5	WASHER 11 X 35 X 5	RONDELLE 11 X35 X5	UNTERLEGSCHEIBE 11 X35 X5	ARANDELA 11 X35 X5
8	F20110706	CAV.Q.M10X 1,5X 30 47X 60 ZN	DISK SUPPORT.ELEMENT U BOLT SV	CAVALIER SUPPORT DISQUE SV	VERBINDUNG SCHEIBENHALTERUNG S	PERNO EN U SOP. DISCO SV
9	F20110770	CAV.Q.M14X 2X 50 96X119 ZN	U-BOLT M14X96 - 119 ZN	CAVALIER M14X96 - 119 ZN	VERBINDUNG M14X96 - 119 ZN	PERNO EN U M14X96 - 119 ZN
10	G18700690	RONDELLA 15 X40 X6 ZN	WASHER 15 X 40 X 6 ZN	RONDELLE 15 X40 X6 ZN	UNTERLEGSCHEIBE 15 X40 X6 ZN	ARANDELA 15 X40 X6 ZN
11	G19204030	SCONTRO FISS.150 2F D15				
12	F01020225	VITE M14X 2X160 U5737 8.8 BR	BOLT M 14 X160 5737 8.G	VIS M 14 X160 5737 8.G	SCHRAUBE M 14 X160 5737 8.G	TORNILLO M 14 X160 5737 8.G
13	F01020463	VITE M10X1,5 X25 U5739 A2 IX	SCREW 10X25 5739 INOX A2	VIS 10X25 5739 INOX A2	SCHRAUBE 10X25 5739 INOX A2	TORNILLO 10X25 5739 INOX A2
14	F01020465	VITE M10X1,5 X35 U5739 A2 IX	SCREW 10X35 5739 INOX A2	VIS 10X35 5739 INOX A2	SCHRAUBE 10X35 5739 INOX A2	TORNILLO 10X35 5739 INOX A2
15	F01200271	DADO M10X 1,5 U5588 A2 IX	NUT 10 5588 6.8 INOX	ECROU 10 5588 6.8 INOX	MUTTER 10 5588 6.8 INOX	TUERCA 10 5588 6.8 INOX
16	F01200306	DADO M14X 2 U5588 6.8 ZN	NUT M14X2	ECROU M14X2	MUTTER M14X2	DADO M14X2
17	F01200271	DADO M10X 1,5 U5588 A2 IX	NUT 10 5588 6.8 INOX	ECROU 10 5588 6.8 INOX	MUTTER 10 5588 6.8 INOX	TUERCA 10 5588 6.8 INOX
18	F01420059	ROS.M10 10,5X 30X2,5 U6593 IX	WASHER 11X30X2,5 6593 A2	RONDELLE 11X30X2,5 6593 A2	UNTERLEGSCHEIBE 11X30X2,5 6593	ARANDELA 11X30X2,5 6593 A2
19	F01020236	VITE M14X 2X220 U5737 8.8 BR	SCREW M14X2X220 U5737 8.8 BR	VIS M14X2X220 U5737 8.8 BR	SCHRAUBE M14X2X220 U5737 8.8	TORNILLO M14X2X220 U5737 8.8
20	F20120346	PUNTALE Q 35 ALETT.POLIT.NERO				
21	G07000028	TUBO Q. 35X 4X2980	SQUARE PIPE 35 X 35 X 3 X 2980	TUBE CARRE 35 X 35 X 3 X 2980	VIERKANTROHR 35 X 35 X 3 X 298	TUBO CUADRADO 35 X 35 X 3 X 29
22	G15272961	RINFORZO SPANDICONCIME 1100	FERTILIZER 1100 REINFORCEMENT	RENFORT EPANDEUR D'ENGRAIS 110	VERSTZRKUNG DsNGERSTREUER 1100	REFUERZO ABONADORA 1100
23	G15275790	ASS.SUPPORTO ANT.SPANDI PLA				
24	G07000370	TUBO Q. 35X 3X3980	SQUARE PIPE 35X35X4X3980	TUBE CARRE 35X35X4X3980	VIERKANTROHR 35X35X4X3980	TUBO CUADRADO 35X35X4X3980
25	G07000375	TUBO Q. 35X 3X1600	SQUARE PIPE 35X35X4X1600	TUBE CARRE 35X35X4X1600	VIERKANTROHR 35X35X4X1600	TUBO CUADRADO 35X35X4X1600
26	G15472970	TUBO Q. 35X 4X1200	SQUARE PIPE 35 X4 X1200	TUBE CARRE 35 X4 X1200	VIERKANTROHR 35 X4 X1200	TUBO CUADRADO 35 X4 X1200
27	G15472980	TUBO Q. 35X 4X 750	SQUARE PIPE 35 X4 X750	TUBE CARRE 35 X4 X750	VIERKANTROHR 35 X4 X750	TUBO CUADRADO 35 X4 X750
28	G15472990	TUBO Q. 35X 4X 600	SQUARE PIPE 35 X4 X600	TUBE CARRE 35 X4 X600	VIERKANTROHR 35 X4 X600	TUBO CUADRADO 35 X4 X600
29	G15475130	TUBO SUPPORTO SERBATOIO L.2480	TANK SUPPORT PIPE L.2480	TUBE SUPPORT RESERVOIR L2460	ROHR HALTERUNG BEHZLTER L.2480	TUBO SOPORTE DEPSITO L 2480 T
30	G15475300	TUBO SUPPORTO MICRO L.1170	MICRO SUPPORT PIPE L.1170	TUBE SUPPORT MICRO L1170	ROHR HALTERUNG MIKRO L.1170	TUBO SOPORTE MICRO L1170
31	G15475390	TUBO SUPPORTO MICRO L.3100	MICRO SUPPORT PIPE L.3100	TUBE SUPPORT MICRO L3100	ROHR HALTERUNG MIKRO L.3100	TUBO SOPORTE MICRO L.3100
32	G15475400	TUBO SUPPORTO MICRO L.5800	MICRO SUPPORT PIPE L.3800	TUBE SUPPORT MICRO L5800	ROHR HALTERUNG MIKRO L.5800	TUBO SOPORTE MICRO L.5800
33	G15475540	TUBO SUPPORTO MICRO L.5100	MICRO SUPPORT PIPE L.5100	TUBE SUPPORT MICRO L5100	ROHR HALTERUNG MIKRO L.5100	TUBO SOPORTE MICRO L 51000
34	G20890207	BARRA DIFFUSORI DISERBO L.1400	WEEDKILLER SPREADER BAR L.1400	BARRE DIFFUSEURS DESHERBAGE L.	DIFFUSORENSTANGE UNKRAUTVERT.	BARRA DIFUSORES HERBICIDA L.1
35	G22220141	BRACCIO SCORREVOLE 4 FILE	SLIDING ARM- 4-ROW	BRAS GLISSANT 4 RANGEES	GLEITARM 4 REIHEN	BRAZO CORREDIZO 4 FILAS
36	G22270115	BRACC.SCORR.6F.100 L.2000 SP	SLIDING ARM 6-R. 100 L.2000 SP	BRAS GLISS. 6 RANG. 100 L. 200	GLEITARM 6R.100 L.2000 SP	BRAZO CORRED. 6 FILAS. 100 L.2
37	G15273180	RINFORZO SPANDICONCIME 850	FERTILIZER 850 REINFORCEMENT	RENFORT EPANDEUR D'ENGRAIS 850	VERSTZRKUNG DsNGERSTREUER 850	REFUERZO ABONADORA 850
38	F01410064	ROS.M10 10,5X 20X 2 U6592 ZN	WASHER 10,5X21	RONDELLE 10,5X21	SCHEIBE 10,5X21	ARANDELA 10,5X21
39	G14276330					
40	G15171650					

TAV. 153

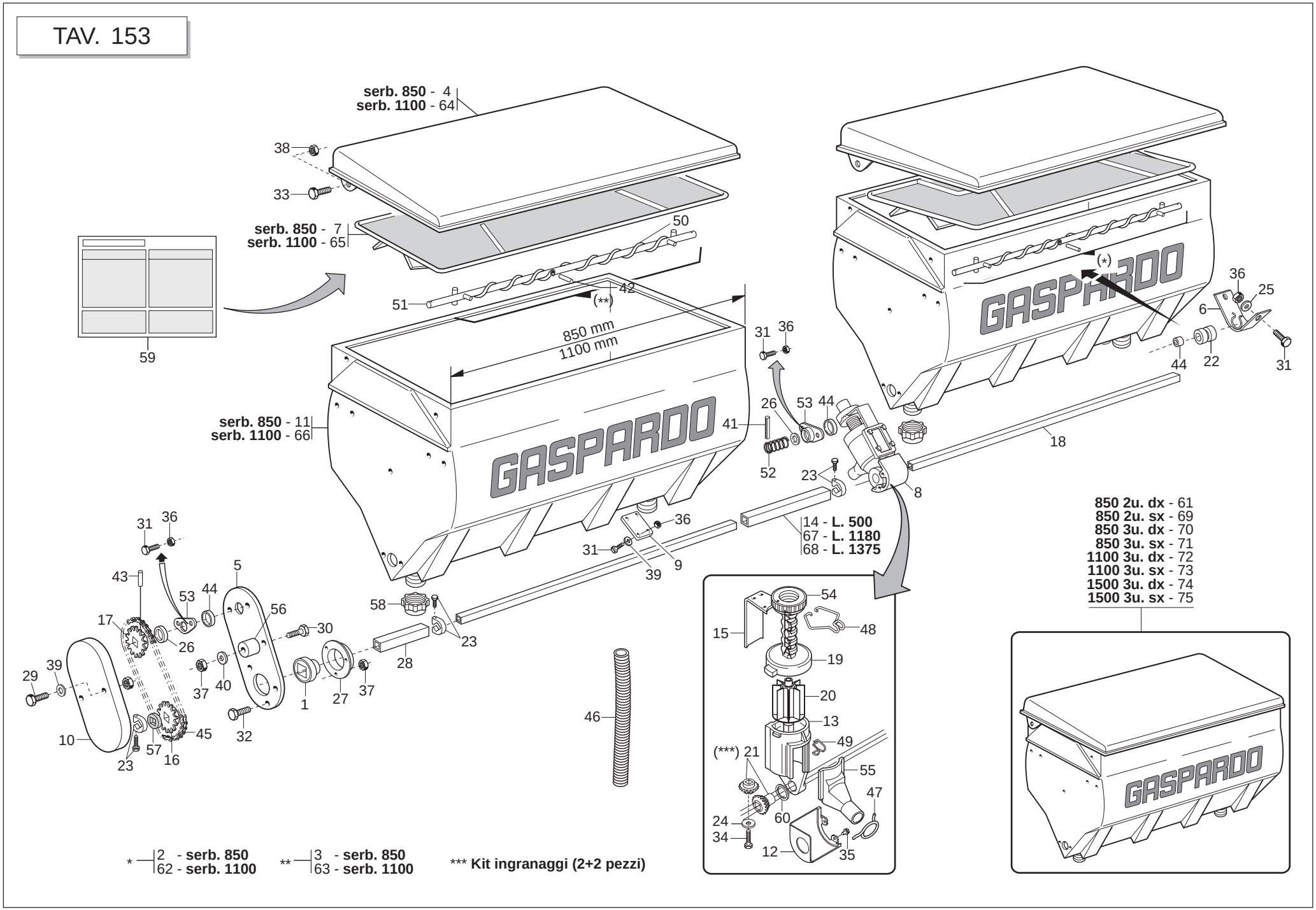

GASPARDO

cod. G19530197

SERBATOI SPANDICONCIME PLASTICA

TAV. 153

Pos.	Cod.	Descrizione	Description	Description	Benennung	Descripcion
1	G14830390	CUSCINETTO FORO QUADRO	SQUARE-HOLED BEARING	ROULEMENT AL+SAGE CARR+	VIERKANTLAGER	COJINETE ORIFICIO CUADRADO
2	G20860121	ASSE AGITAT.DX SERB.850 COMPL.	STIRRER SPINDLE- RIGHT 850 TAN	AXE AGITATEUR DRT. RESERVOIR 8	SAMENMISCHERACHSE RE BEH.850	EJE AGITAD. DER. DEPS.850 COMA
3	G20860122	ASSE AGITAT.SX SERB.850 COMPL.	STIRRER SPINDLE- LEFT 850 TANK	AXE AGITATEUR GCH. RESERVOIR 8	SAMENMISCHERACHSE LI BEH.850	EJE AGITAD. IZQ. DEPS. 850 COA
4	G15470580	COPERCHIO SERBATOIO 850	TANK TOP 850	COUVERCLE RESERVOIR 650	BEHZLTERDECKEL 850	TAPA DEPSITO 850 A
5	G15471930	PROTEZIONE	GUARD	PROTECTION	SCHUTZ	PROTECCIN P
6	G15471990	SUPPORTO COCLEA	SCREW SUPPORT	SUPPORT VIS ALIMENTATION	HALTERUNG SCHNECKE	SOPORTE CCLEA S
7	G15472760	GRIGLIA SERBATOIO PLASTICA 850	PLASTIC TANK GRID 850	GRILLE RESERVOIR PLASTIQUE 850	BEHZLTERGITTER PLAST.850	REJILLA DEPSITO PLAST.850 G
8	G15472770	DISTR.COMPL.8PALE SPANDI PL	COMPL.PLAS.FERTIL.DISTR.8RIBS	MINIMAX COMPL 8C PLA	KOMPL.DOSIER.PLA.DÜNGERSTR.8S	DISTR.COMP.ABONO PLAST. 8AL.
9	G15472780	TAPPO SPANDI PLASTICA	PLASTIC FERT. SPREADER PLUG	BOUCHON EPAND. PLASTIQUE	PLASTIKPFROPFEN DsNGERSTR.	TAPN ABONADORA PLæSTICO D
10	G19002710	PROTEZ.RINVIO SPANDICONCIME	FERTILIZER TRANSM. PROTECTION	PROTECTION RENVOI FERTILISEUR	SCHUTZ VORGELEGE DUNGERSTREUER	PROTECCION TRANSMISION ABONADO
11	G19004470	SERBATOIO CONCIME 850	FERTILIZER HOPPER 850	TR+MIE ENGRAIS 850	D_NGERTANK 850	DEPËSITO ABONO 850
12	G19002850	PROTEZIONE PIGNONE	PINION GUARD	PROTECTION PIGNON	RITZELSCHUTZ	PROTECCIN PI¾N PR
13	G19002920	CORPO DISTRIBUTORE SPANDI PLA.	PLA. F.SPREADER DISTRIB.CASING	CORPS DISTRIBUTEUR EPAND.	VERTEILUNGSKTRPER STREUER PLA.	CUERPO DIST. ABONADORA PLæS.
14	G20860012	MANICOTTO DI UNIONE L.500	JOINT SLEEVE L.500	MANCHON DE RACCORD L. 500	VERBINDUNGSMUFFE L.500	MANGUITO DE UNIN L.500 M
15	G20860052	REGOLATORE APERTURA	OPENING REGULATOR	REGULATEUR OUVERTURE	TFFNUNGSEINSTELLER	REGULADOR ABERTURA
16	G20860086	INGRANAGGIO 1/2 Z-12 F.Q.	GEAR 1/2 Z-12 F.Q.	ENGRENAGE 1/2 Z-12 TROUS CARRE	ZAHNRAD 1/2 Z-12 F.Q.	ENGRANAJE 1/2 Z-12 F.Q.
17	G20860088	INGRANAGGIO 1/2 Z-12 F.T.	GEAR 1/2 Z-12 F.T.	ENGRENAGE 1/2 Z-12 TROUS RONDS	ZAHNRAD 1/2 Z-12 F.T.	ENGRANAJE 1/2 Z-12 F.T.
18	G20860090	ASSE SX 5F.60 L.1460	AXLE- LEFT 5-R.60 L.1460	AXE GCH. 5 RANGEES 60 L. 1460	ACHSE LI 5R.F.60 L.1460	EJE IZQ. 5 FILA. 60 L.1460
19	G20860093	VITE DI REGOL.	ADJUSTMENT BOLT	VIS DE REGLAGE	EINSTELLSCHRAUBE.	TORNILLO DE REGULACIN S
20	G20860106	DOSATORE SPANDI 8 PALE COMPL.	FERT.METERING DEVICE ASS.8 GRO	ROTOR DOSEUR 8C FERTI	DOSIERER DUNGER.KOMPL. 8 SEKT	DOSIFICADOR ABONO COMP.8 SECT
21	G20860126	KIT INGR DISTR CONCIME (2+2)	KIT- MAN. DISTR. GEARS	COUPLE CON DISTR ENGRAIS (2+2)	KIT ZAHNRZDER DsNGERSTREUER	SET ENGRANAJES DISTRIB. ABONO
22	G19005040	BOCCOLA ASSE SPANDI	FERT. SPREADER AXLE BUSH	DOUILLE AXE +PANDEUR	ACHSENBUCHSE STREUER	MANGUITO -RBOL ABONADORA
23	G22505085	FERMO ASSE IN LAMIERA	PLATE AXLE STOP	ARRET AXE EN TOLE	FESTSTELLVORRICHTUNG BLECHACHS	BLOQUEO EJE DE CHAPA
24	G20970097	RONDELLA 32X3X4,5	WASHER 32X3X4-5	RONDELLE 32X3X4-5	UNTERLEGSCHEIBE 32X3X4-5	ARANDELA 32X3X4-5
25	G20970125	RONDELLA 28X2,5X6,5	WASHER 28X2-5X6-5	RONDELLE 28X2-5X6-5	UNTERLEGSCHEIBE 28X2-5X6-5	ARANDELA 28X2-5X6-5
26	G22220073	RONDELLA 28X0,3X16,5	WASHER 28X0-3X16-5	RONDELLE 28X0-3X16-5	UNTERLEGSCHEIBE 28X0-3X16-5	ARANDELA 28X0-3X16-5
27	G22230094	SUPPORTO CUSCINETTO	BEARING SUPPORT	SUPPORT PALIER	LAGERBsCHSE	SOPORTE COJINETE
28	G22250287	MANICOTTO DISTANZIALE SV	SPACER SLEEVE SV	MANCHON ENTRETOISE SV	ABSTANDSMUFFE SV	MANGUITO DISTANCIADOR SV
29	F01020043	VITE M 6X 1X 60 U5737 8.8 ZN	BOLT 6 X60 5737 8.G GALVANIZED	VIS 6 X60 5737 8.G ZN	SCHRAUBE 6 X60 5737 8.G ZN	TORNILLO 6 X60 5737 8.G ZN
30	F01020068	VITE M 8X1,25X40 U5737 8.8 ZN				
31	F01020403	VITE M 6X 1X 16 U5739 8.8 ZN	BOLT M 6X16	VIS M 6X16	SCHRAUBE M 6X16	TORNILLO M 6X16
32	F01020432	VITE M 8X1,25X16 U5739 8.8 ZN	BOLT M 8X16	VIS M 8X16	SCHRAUBE M 8X16	TORNILLO M 8X16
33	F01020472	VITE M10X 1,5X25 U5739 8.8 ZN	BOLT 10X25 5739 8.G GALVANIZED	VIS 10X25 5739 8.G ZN	SCHRAUBE 10X25 5739 8.G ZN	TORNILLO 10X25 5739 8.G ZN
34	F01070075	VIT.A.4,2X1,41X 38 6954 4.8NI	BOLT 4-2X38 DIN 7981	VIS 4-2X38 DIN 7981	SCHRAUBE 4-2X38 DIN 7981	TORNILLO 4-2X38 DIN 7981
35	F01070011	VIT.A.4,2X1,41X 9,5 6950 4.8NI	BOLT- SELF-TAPPING 4-2X9-5T.E.	VIS AUTOTAR. 4-2X9-5 T. E. COU	SELBSTSCHNEID. SCHRAUBE 4-2X9-	TORNILLO AUTORROSC. 4-2X9-5
36	F01200232	DADO M 6X 1 U5588 6.8 ZN				
37	F01200244	DADO M 8X1,25 U5588 6.8 ZN	NUT M8	ECROU M8	MUTTER M8	DADO M8
38	F01220033	DADO M10X 1,5 D980 8 ZN	NUT M10X 1,5 D980 8 ZB	ECRO.M10X 1,5 D980 8 ZB	MUTT.M10X 1,5 D980 8 ZB	TUER.M10X 1,5 D980 8 ZB
39	F01410037	ROS.M6 6,4X12,5X1,6 U6592 ZN	PLANE WASHER D.6	RONDELLE D.6	SCHEIBE D.6	ARANDELA D.6
40	F01410051	ROS.M8 8,4X 17X1,6 U6592 ZN	PLANE WASHER D.8	RONDELLE D.8	SCHEIBE D.8	ARANDELA D.8
41	F02100079	SPINA E.P. 5X 16 U6873 C70 BR				
42	F02100089	SPINA E.P. 5X 36 U6873 C70 BR	PIN EL. 5 X36 DIN 1481	FICHE EL. 5 X36 DIN 1481	SPANNSTIFT 5 X36 DIN 1481	CLAVIJA EL.5 X36 DIN 1481
43	F02100114	SPINA E.P. 6X 30 U6873 C70 BR	ELASTIC PIN 6X30	GOUJON ELASTIQUE 6X30	SPANNHUELSE 6X30	ESPINA ELASTICA 6X30
44	F03011081	GUARNIZIONI LABBRO DE100				
45	F06080196	CATENA 1/2 ISO 083 32 MAGLIE	CUT-DOWN CHAIN .1/2 ISO 083 32	TRONCON CHAINE 1/2 ISO 083 32	KETTENLZNGE 1/2 ISO 083 32 GL	TRECHO CADENA 1/2 ISO 083 32
46	F03100500	TUBO EOLO 35 PU	EOLO PIPE 35 PU	TUBE EOLO 35 PU	ROHR EOLO 35 PU	TUBO EOLO 35 PU
47	G65336025	MOLLA SPEC.ZN STRINGIT.ASP.SP	SPEC SPRING ZN FAN . PIPE CLAM	RESSORT SPEC. ZN SERRE-TUBE AS	SPEZIALFEDER ZN RORHSCHELLE AB	MUELLE ESPEC. ZN APRIETA TUBOS
48	G65336055	MOLLA SPEC.REGOL.SPAND. SP	SPEC SPRING MAN. SPR. ADJUSTM.	RESSORT SPEC. REGL. EP. ENTRAI	SPEZIALFEDER STREUEREINSTELLUN	MUELLE ESPEC. REGUL. ABONADORA
49	G65336062	MOLLA SPEC.SCIV.DISTR.SPAND.SP	SPEC SPRING - MAN. SPR. DISTR.	RESS. SPEC. LANCOIR DISTR. EP.	SPEZ.FEDER RUTSCHE SZAPP. STRE	MUELLE ESPEC.PLANO INCL.DISTR.
50	G65336064	MOLLA SPEC.COCLEA DX SPAND.HL	SPEC. WORM SCREW SPRING RIGHT	RESSORT SPEC. VIS DRT. EP. ENG	SPEZ.FEDER RE SCHNECKE STREUER	MUELLE ESPEC. TORN.S/F DER. AB
51	G65336065	MOLLA SPEC.COCLEA SX SPAND.HL	SPEC. WORM SCREW SPRING LEFT M	RESSORT SPEC. VIS GCH. EP. ENG	SPEZ.FEDER LI SCHNECKE STREUER	MUELLE ESPEC. TORN.S/F IZQ. AB
52	G65338043	MOLLA COMP.ZN SERB. M80	ZN TANK COMP.SPRING M80	RESSORT COMPL. ZN RESERVOIR M8	DRUCKFEDER ZN BEHZLTER M80	MUELLE COMP.ZN DEPS. M80 A
53	G66248121	BOCCOLA CON FLANGIA M80	BUSHING W/ FLANGE M80	SUPPORT AVEC BRIDE M80	BsCHSE MIT FLANSCH M80	CASQUILLO CON BRIDA M80
54	G66248125	GHIERA REGOLAZIONE M80	ADJUSTMENT KNURLED NUT M80	BAGUE REGLAGE M80	EINSTELLMUTTER M80	CONTRATUERCA REGULACIN M80 G
55	G66248178	SCIVOLO DISTR.SPAND. SP	CHUTE- MANURE-SPREADER DISTRIB	LANCOIR DISTRIBUTION EP. ENGR.	DsNGERSTREUER RUTSCHE SP	PLANO INCLINADO DISTR. ABON. S

TAV. 153

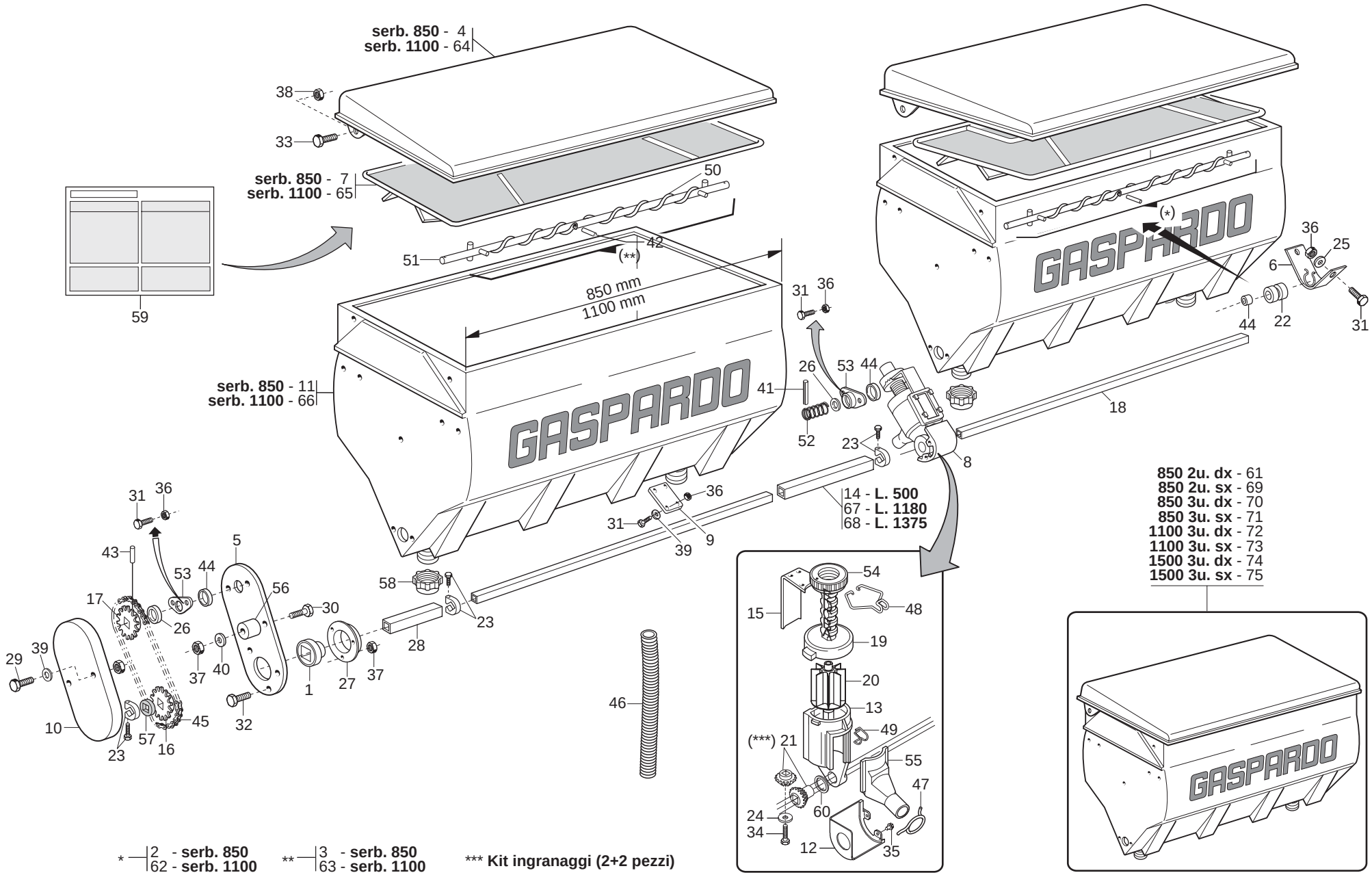
serb. 850 - 4
serb. 1100 - 64
38
33
serb. 850 - 7
serb. 1100 - 65
50
51
42
(**)
850 mm
1100 mm
59
serb. 850 - 11
serb. 1100 - 66
GASPARDO
31
36
26
53
44
41
52
23
8
18
(*)
6
25
22
14 - L. 500
67 - L. 1180
68 - L. 1375
9
39
58
28
30
5
56
43
17
29
10
1
27
37
40
32
45
57
16
46
54
48
15
19
20
13
49
(***) 21
55
47
60
24
34
12
35
850 2u. dx - 61
850 2u. sx - 69
850 3u. dx - 70
850 3u. sx - 71
1100 3u. dx - 72
1100 3u. sx - 73
1500 3u. dx - 74
1500 3u. sx - 75
* 2 - serb. 850
62 - serb. 1100
** 3 - serb. 850
63 - serb. 1100
*** Kit ingranaggi (2+2 pezzi)

SERBATOI SPANDICONCIME PLASTICA

TAV. 153

Pos.	Cod.	Descrizione	Description	Description	Benennung	Descripcion
56	G66248207	TENDICATENA SPAND. SP-520	CHAIN TENSIONER	TENDEUR DE CHAINE EPAND. ENGR.	KETTENSPANNER DsNGERSTR. SP-52	TENSOR DE CADENA ABON. SP-520
57	G66248218	RONDELLA DISTAN.SPAND.	MAN. SPR. SPACER WASHER	RONDELLE ENTRETOISE EP. ENGRAI	ABSTANDSCHEIBE DsNGERSTREUER	ARANDELA DISTAN.ABONAD.
58	F03150757	TAPPO FILETT.SERBAT.PLASTICA	PLASTIC TANK THREADED PLUG	BOUCHON FILETE RESERV.PLAST.	GEWINDEPFROPFEN PLASTIKBEH.	TAPN ROSCADO DEPS.PLæSTICO DO
59	G19700821	TABELLA CONCIME SP540	FERTILIZER CHART STICKER	DECALC. TABLEAU DE ENGRAIS	ABZIEHB. TABELLE D_NGER	CAL.TABLA ABONO
60	G18701500	RONDELLA 29,5 X38 X0,3	WASHER 29,5 X 38 X 0,3	RONDELLE 29,5 X38 X0,3	UNTERLEGSCHEIBE 29,5X38X0,3	ARANDELA 29,5 X38 X0,3
61	G15472790	SERBATOIO 850 PLA.2U DX	PLAS.FERT.TANK 850 2 OUT. RH	RESERV 850 PLA 2S COMPL DRT	BEHZLTER 850 PLAST. RE 2 AUSG.	DEPSITO 850 PLA.2 SAL. DER. B
62	G15271540	ASSE AGITATORE DX 1100	STIRRER SPINDLE-RIGHT 1100 TAN	AXE AGITATEUR DRT.RESERV.1100	SAMENMISCHERACHSE RE BEH.1100	EJE AGITAD.DER.DEPS.1100 COM A
63	G15271550	ASSE AGITATORE SX 1100	STIRRER SPINDLE- LEFT 1100	AXE AGITATEUR GCH. 1100	SAMENMISCHERACHSE LINKER 1100	EJE AGITAD. IZQ. 1100
64	G15471920	COPERCHIO SERBATOIO L.1100	TANK COVER L.1100	COUVERCLE RESERVOIR L.1100	BEHZLTERDECKEL L.1100	TAPA DEPS.L.1100 A
65	G15473130	GRIGLIA SERBATOIO 1100 PLAST.	PLASTIC TANK GRID 1100	GRILLE RESERVOIR PLAST.1100	BEHZLTERGITTER PLAST.1100	REJILLA DEPSITO PLAST.1100 G
66	G19003060	SERBATOIO 1100 PLASTICA	PLASTIC TANK 1100	RESERVOIR 1100 PLASTIQUE	PLASTIKBEHZLTER 1100	DEPSITO 1100 PLæSTICA B
67	G20910045	MANICOTTO UNIONE L.1180	JOINT SLEEVE L.1180	MANCHON RACCORD L. 1180	VERBINDUNGSMUFFE L.1180	MANGUITO DE UNIN L.1180 M
68	G20910044	MANICOTTO UNIONE L.1375	JOINT SLEEVE L.1375	MANCHON RACCORD L. 1375	VERBINDUNGSMUFFE L.1375	MANGUITO DE UNIN L.1375 M
69	G15472800	SERBATOIO 850 PLA.2U SX	PLAS.FERT.TANK 850 2 OUT. L	RESERV 850 PLA 2S COMPL GCH	BEHZLTER 850 PLAST. LI 2 AUSG.	DEPSITO 850 PLA.2 SAL. IZQ. B
70	G15472810	SERBATOIO 850 PLA.3U DX	PLAS.FERT.TANK 850 3 OUT. RH	RESERV 850 PLA 3S COMPL DRT	BEHZLTER 850 PLAST. RE 3 AUSG.	DEPSITO 850 PLA.3 SAL. DER. B
71	G15472820	SERBATOIO 850 PLA.3U SX	PLAS.FERT.TANK 850 3 OUT. LH	RESERV 850 PLA 3S COMPL GCH	BEHZLTER 850 PLAST. LI 3 AUSG.	DEPSITO 850 PLA.3 SAL. IZQ. B
72	G15272680	SERBATOIO 1100 3U.DX PLA.COMP.	TANK ASSY.1100 RIGHT 3U	RESERV 1100 PLA 3S COMPL DRT	KOMPL. BEHZLTER 1100 RE 3AUSG	DEPS. COMPL.1100 DER. 3 SAL. B
73	G15272720	SERBATOIO 1100 3U.SX PLA.COMP.	TANK ASSY. 1100 LEFT 3U	RESERV 1100 PLA 3S COMPL GCH	KOMPL. BEHZLTER 1100 LI 3AUSG	DEPS. COMPL.1100 IZQ. 3 SAL. B
74	G15471430	SERBATOIO 1500 3U DX	TANK ASSY.1500 LEFT 3U	RESERV 1500 FER 3S COMPL DRT	KOMPL. BEHZLTER 500 LI 3U	DEPS. COMPL.500 IZQ. 3 SAL. B
75	G15471440	SERBATOIO 1500 3U SX	TANK ASSY.1500 LEFT 3U	RESERV 1500 FER 3S COMPL DRT	KOMPL. BEHZLTER 1500 LI 3U	DEPS. COMPL.1500 IZQ. 3 SAL. B

TAV. 304

BBX = **B**ig **B**ag ino**X** *(capacità totale 650 litri / total capacity 650 liters)*
BBP = **B**ig **B**ag **P**lus *(capacità totale 1000 litri / total capacity 1000 liters)*

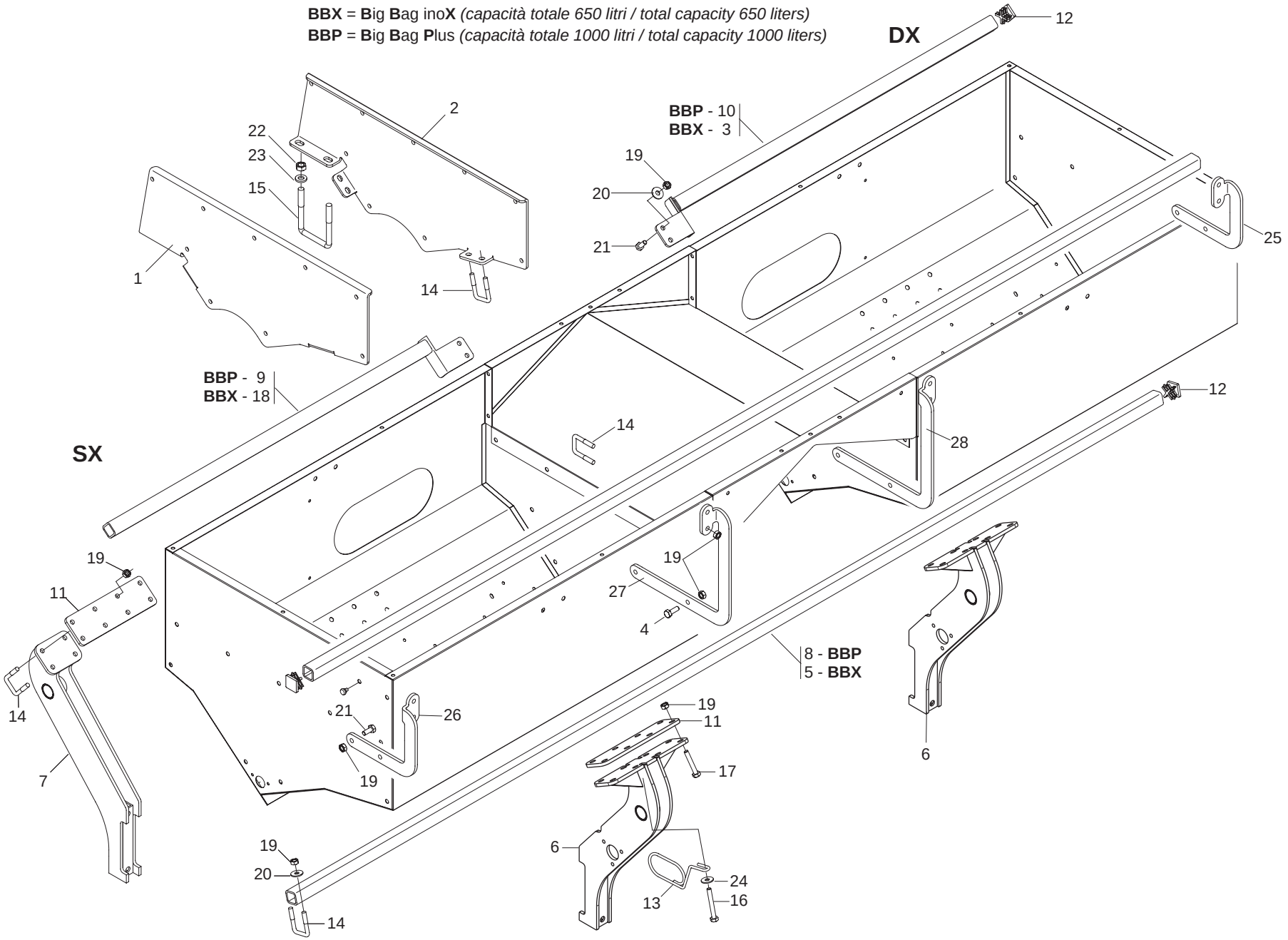

GASPARDO

SUPPORTI SERBATOIO SPANDICONCIME UNICO

TAV. 304

Pos.	Cod.	Descrizione	Description	Description	Benennung	Descripcion
1	G15273322	FIANCO SUPP.INTERNO SX.				
2	G15273332	FIANCO SUPP.INTERNO DX.				
3	G15274051	ASS.TUBO APPOGGIO FRONTALE DX				
4	F01020464	VITE M10X1,5 X30 U5739 A2 IX	BOLT M10X1,5 X 30 U5739 8.8 IX	VIS M10X1,5 X 30 U5739 8.8 IX	SCHRAUBE M10X1,5 X 30 U5739 8.	TORNIL. M10X1,5 X 30 U5739 8.8
5	G15475130	TUBO SUPPORTO SERBATOIO L.2480	TANK SUPPORT PIPE L.2480	TUBE SUPPORT RESERVOIR L2460	ROHR HALTERUNG BEHZLTER L.2480	TUBO SOPORTE DEPSITO L 2480 T
6	G15273443	SUPPORTO POSTERIORE				
7	G15273472	SUPPORTO FRONTALE				
8	G07000028	TUBO Q. 35X 4X2980	SQUARE PIPE 35 X 35 X 3 X 2980	TUBE CARRE 35 X 35 X 3 X 2980	VIERKANTROHR 35 X 35 X 3 X 298	TUBO CUADRADO 35 X 35 X 3 X 29
9	G15273501	ASS.TUBO APPOGGIO FRONT.SX.				
10	G15273521	ASS.TUBO APPOGGIO FRONT.DX.				
11	G15273531	PIASTRA ATTACCO SUPPORTO				
12	F20120346	PUNTALE Q 35 ALETT.POLIT.NERO				
13	G18904050	MOLLA GUIDA 2 TUBI DEPRESS.	TUBE GUIDE SPRING	RESSORT GUIDE-TUBES	EDER ROHRF_HRUNG	MUELLE GUA TUBOS
14	F20110706	CAV.Q.M10X 1,5X 30 47X 60 ZN	DISK SUPPORT.ELEMENT U BOLT SV	CAVALIER SUPPORT DISQUE SV	VERBINDUNG SCHEIBENHALTERUNG S	PERNO EN U SOP. DISCO SV
15	F20110770	CAV.Q.M14X 2X 50 96X119 ZN	U-BOLT M14X96 - 119 ZN	CAVALIER M14X96 - 119 ZN	VERBINDUNG M14X96 - 119 ZN	PERNO EN U M14X96 - 119 ZN
16	F01020144	VIT.M10X 1,5X 75 U5737 A2 IX				
17	F01020143	VITE M10X 1,5X65 U5737 A2 IX	BOLT M10X 1,5X 65 U5737 8.8 IX	VIS M10X 1,5X 65 U5737 8.8 IX	SCHRAUBE M10X 1,5X 65 U5737 8.	TORNIL. M10X 1,5X 65 U5737 8.8
18	G15274041	ASS.TUBO APPOGGIO FRONTALE SX				
19	F01200271	DADO M10X 1,5 U5588 A2 IX	NUT 10 5588 6.8 INOX	ECROU 10 5588 6.8 INOX	MUTTER 10 5588 6.8 INOX	TUERCA 10 5588 6.8 INOX
20	F01420059	ROS.M10 10,5X 30X2,5 U6593 IX	WASHER 11X30X2,5 6593 A2	RONDELLE 11X30X2,5 6593 A2	UNTERLEGSCHEIBE 11X30X2,5 6593	ARANDELA 11X30X2,5 6593 A2
21	F01020463	VITE M10X1,5 X25 U5739 A2 IX	SCREW 10X25 5739 INOX A2	VIS 10X25 5739 INOX A2	SCHRAUBE 10X25 5739 INOX A2	TORNILLO 10X25 5739 INOX A2
22	F01200306	DADO M14X 2 U5588 6.8 ZN	NUT M14X2	ECROU M14X2	MUTTER M14X2	DADO M14X2
23	G18700690	RONDELLA 15 X40 X6 ZN	WASHER 15 X 40 X 6 ZN	RONDELLE 15 X40 X6 ZN	UNTERLEGSCHEIBE 15 X40 X6 ZN	ARANDELA 15 X40 X6 ZN
24	F01420060	ROS.M10 10,5X 30X2,5 U6593 ZN	WASHER 10,5X30	RONDELLE 10,5X30	SCHEIBE 10,5X30	ARANDELA 10,5X30
25	G15273711	SUPPORTO SX TUBO MICRO				
26	G15273721	SUPPORTO DX TUBO MICRO				
27	G15273731	SUPPORTO LUNGO SX TUBO MICRO				
28	G15273741	SUPPORTO LUNGO DX TUBO MICRO				

TAV. 314

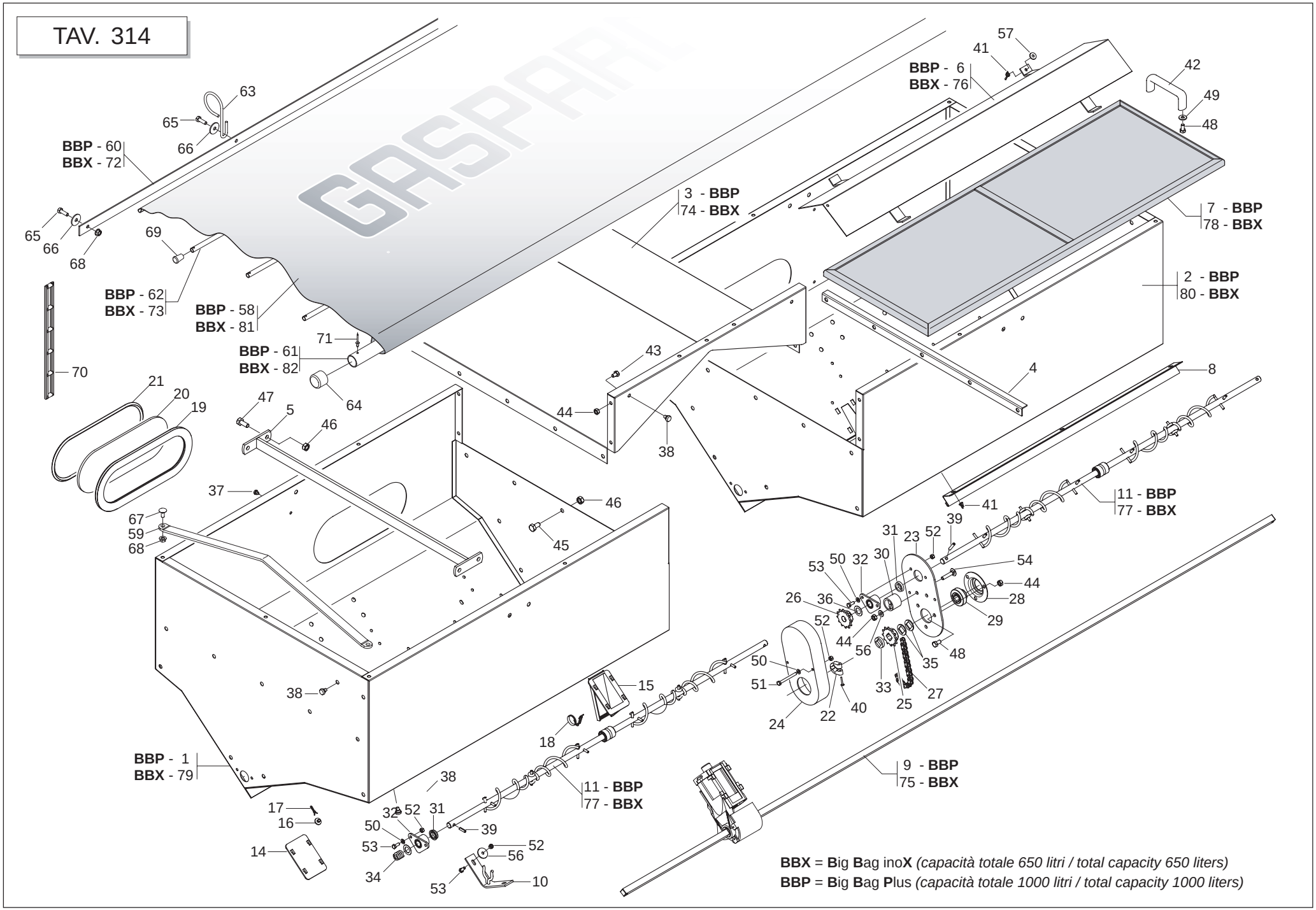
BBP - 60
BBX - 72
BBP - 62
BBX - 73
BBP - 58
BBX - 81
BBP - 61
BBX - 82
BBP - 6
BBX - 76
3 - BBP
74 - BBX
7 - BBP
78 - BBX
2 - BBP
80 - BBX
11 - BBP
77 - BBX
9 - BBP
75 - BBX
BBP - 1
BBX - 79
11 - BBP
77 - BBX
BBX = Big Bag inoX (capacità totale 650 litri / total capacity 650 liters)
BBP = Big Bag Plus (capacità totale 1000 litri / total capacity 1000 liters)

SERBATOIO SPANDICONCIME UNICO

TAV. 314

Pos.	Cod.	Descrizione	Description	Description	Benennung	Descripcion
1	G15273233	ASS.SERBATOIO SX. MTE300				
2	G15273283	ASS.SERBATOIO DX. MTE300				
3	G15273311	ASS.LAMIERA CENTRALE MTE300				
4	G15273540	LAMIERA APPOGGIO GRIGLIA	GRID SUPPORT BRACKET	+TRIER SUPPORT GRILLE	GITTERHALTB_GEL	ESTRIBO SOPORTE REJILLA
5	G15273560	TIRANTE INTERNO	INT. TIE ROD	TRINGLE INT.	INNERE SPANNSTANGE	TIRANTE INTERIOR
6	G15273581	TEGOLO MTE300				
7	G15273840	GRIGLIA SERBATOIO MTE300	TANK GRID. MTE300	GRILLE RESERVOIR MTE300	BEHZLTERGITTER MTE300	REJILLA DEPS. MTE300
8	G15273621	PORTA PULIZIA	CLEANING DOOR	PORTE DE NETTOYAGE	REINIGUNGST_R	PUERTA LIMPIEZA
9	G15273750	ASSE TRASM.L.2800	TRANSMISSION SHAFT L. 2800	AXE TRANSMISSION L.2800	ANTRIEBSACHSE L.2800	EJE TRANSM.L.2800
10	G15273700	SUPPORTO COCLEA	SCREW SUPPORT	SUPPORT VIS ALIMENTATION	HALTERUNG SCHNECKE	SOPORTE CËCLEA
11	G15273610	ASSE AGITAT.SERBAT.UNICO COMPL	STIRRER SPINDLE BB300 TANK	AXE AGITATEUR RESERVOIR BB300	SAMENMISCHERACHSE BEH. BB300	EJE AGITAD. DEPS. BB300
12	G19003660	SUPPORTO	SUPPORT	SUPPORT	HALTERUNG	SOPORTE
13	G16670180	INGRANAGGIO Z.15-DISTANZ.COMPL	COMPLETE GEAR Z.15-SPACER	ENGRENAGE Z.15 ENTRET. COMPL.	ZAHNRAD Z.15-KOMPL. DISTANZST	ENGRANAJE Z.15-DISTANC.COMPL
14	G66248184	CHIUSURA USCITA SERB.SPAND.SP	OUTLET CLOSURE- MAN.SPREAD. TA	FERMETURE SORTIE RESERVOIR FER	VERSCHLUSS AUSTRITT DsNGERSTR.	CIERRE SALIDA DEPS. ABON. SP I
15	G66248187	SCARICO SERB.SPAND.TIPO MICRO	MICRO TYPE MAN.SPR.TANK DISCH.	TRAPPE DE VIDANGE TYPE MICRO	BEHZLTERENTLADUNG STREUER TYP	DESCARGA DEPS. ABON.TIPO MICRD
16	G66248224	FERMO DISTRIBUTORE SPAND.	FERT. SPR. DISTRIB. STOP	ARRET DISTRIBUTEUR EP. ENGRAIS	FESTSTELLVORRICHTUNG SZAPP. ST	BLOQUEO DISTRIBUIDOR ABON.
17	G65336089	MOLLA SPEC.TENUTA FERMO SPAND.	SPEC.SPRING- BLOCK. MAN. SPR.	RESSORT SPEC. D'ETANCHEITE ARR	SPEZIALFEDER DICHTUNG STREUER	MUELLE ESPEC. RETENC. BLOQ
18	G65336080	MOLLA SPEC.SCARICO SPAND.T.M.	SPEC.SPRING- MAN. SPR. DISCHAR	RESSORT SPEC. DECHARGEMENT FER	SPEZIALFEDER STREUERENTLADUNG	MUELLE ESPEC. DESCARGA ABONAD.
19	F03011155	GUARNIZIONE VETRO TRAMOGGIA	GLASS SEAL	GARNITURE VERRE	GLASDICHTUNG	JUNTA VIDRIO
20	G16021080	VETRO CONTROLLO LIVELLO SEMI	SEED LEVEL CHECKING GLASS	VITRE CONTROLE NIV. GRAINES	KONTROLLFENSTER SAMENSTAND	VIDRIO CONTROL NIVEL SEMILLAS
21	G68005092	TENDITORE GUARNIZIONE	TURNBUCKLE GASKET	TENDEUR GARNITURE	DICHTUNGSSPANNER	TENSOR JUNTA
22	G22505085	FERMO ASSE IN LAMIERA	PLATE AXLE STOP	ARRET AXE EN TOLE	FESTSTELLVORRICHTUNG BLECHACHS	BLOQUEO EJE DE CHAPA
23	G15471930	PROTEZIONE	GUARD	PROTECTION	SCHUTZ	PROTECCIN P
24	G17170270	PROTEZIONE RINVIO SERBATOIO	INTERNAL TRANSMISS. TANK PROTE	PROTECTION RENVOI TREMIE	VORGELEGESCHUTZ BEH-LTER	PROTECCION ENVIO DEPOSITO
25	G20860086	INGRANAGGIO 1/2 Z-12 F.Q.	GEAR 1/2 Z-12 F.Q.	ENGRENAGE 1/2 Z-12 TROUS CARRE	ZAHNRAD 1/2 Z-12 F.Q.	ENGRANAJE 1/2 Z-12 F.Q.
26	G20860088	INGRANAGGIO 1/2 Z-12 F.T.	GEAR 1/2 Z-12 F.T.	ENGRENAGE 1/2 Z-12 TROUS RONDS	ZAHNRAD 1/2 Z-12 F.T.	ENGRANAJE 1/2 Z-12 F.T.
27	F06080196	CATENA 1/2 ISO 083 32 MAGLIE	CUT-DOWN CHAIN .1/2 ISO 083 32	TRONCON CHAINE 1/2 ISO 083 32	KETTENLZNGE 1/2 ISO 083 32 GL	TRECHO CADENA 1/2 ISO 083 32
28	G22230094	SUPPORTO CUSCINETTO	BEARING SUPPORT	SUPPORT PALIER	LAGERBsCHSE	SOPORTE COJINETE
29	G14830390	CUSCINETTO FORO QUADRO	SQUARE-HOLED BEARING	ROULEMENT AL+SAGE CARR+	VIERKANTLAGER	COJINETE ORIFICIO CUADRADO
30	G66248207	TENDICATENA SPAND. SP-520	CHAIN TENSIONER	TENDEUR DE CHAINE EPAND. ENGR.	KETTENSPANNER DsNGERSTR. SP-52	TENSOR DE CADENA ABON. SP-520
31	F03011081	GUARNIZIONI LABBRO DE100				
32	G66248121	BOCCOLA CON FLANGIA M80	BUSHING W/ FLANGE M80	SUPPORT AVEC BRIDE M80	BsCHSE MIT FLANSCH M80	CASQUILLO CON BRIDA M80
33	G66248218	RONDELLA DISTAN.SPAND.	MAN. SPR. SPACER WASHER	RONDELLE ENTRETOISE EP. ENGRAI	ABSTANDSCHEIBE DsNGERSTREUER	ARANDELA DISTAN.ABONAD.
34	G65338043	MOLLA COMP.ZN SERB. M80	ZN TANK COMP.SPRING M80	RESSORT COMPL. ZN RESERVOIR M8	DRUCKFEDER ZN BEHZLTER M80	MUELLE COMP.ZN DEPS. M80 A
35	G18701650	RONDELLA FORO QUADRO ZN	WASHER 16,5X30X2,5 ZN	RONDELLE 16,5X30X2,5 ZN	UNTERLEGSCHEIBE 16,5X30X2,5 ZN	ARANDELA 16,5X30X2,5 ZN
36	G22220073	RONDELLA 28X0,3X16,5	WASHER 28X0-3X16-5	RONDELLE 28X0-3X16-5	UNTERLEGSCHEIBE 28X0-3X16-5	ARANDELA 28X0-3X16-5
37	G19003160	TAPPO PER FORO D.7	PLUG FOR D.7 HOLE	BOUCHON POUR TROU D.7 P	FROPFEN FsR LOCH D.7 T	APN PARA AGUJERO D.7 DO
38	G66248223	TAPPO SUPP.SPAND.D.11	PLUG MAN. SPR. SUPP. D.11	BOUCHON SUPPORT EP. ENGRAIS D.	HALTERUNGSPFROPFEN DsNGERSTR.	TAPN SOPORTE ABON.D.11 D
39	F02100114	SPINA E.P. 6X 30 U6873 C70 BR	ELASTIC PIN 6X30	GOUJON ELASTIQUE 6X30	SPANNHUELSE 6X30	ESPINA ELASTICA 6X30
40	F01070074	VIT.A.4,2X1,41X 25 6954 4.8NI	BOLT 4-2X25 DIN 7981	VIS 4-2X25 DIN 7981	SCHRAUBE 4-2X25 DIN 7981	TORNILLO 4-2X25 DIN 7981
41	F01240012	DADO M 6X 1 U5448 5.8 ZN	NUT 6 UNI 5448 5.8 ZN	ECROU 6 UNI 5448 5.8 ZN	MUTTER 6 UNI 5448 5.8 ZN	TUERCA 6 UNI 5448 5.8 ZN
42	F05150112	MANIGLIA INTERAS. 117 FORO 8MM	HANDLE	POIGNEE	HANDGRIFF	MANILLA
43	F01020426	VITE M 8X1,25X12 U5739 A2 IX	BOLT M8 X1,25X 12 U5739 8.8 IX	VIS M8 X1,25X 12 U5739 8.8 IX	SCHRAUBE M8 X1,25X 12 U5739 8.	TORNIL. M8 X1,25X 12 U5739 8.8
44	F01200245	DADO M 8X1,25 U5588 A2 IX	NUT M 8X1,25 U5588 6.8 IX	ECROU M 8X1,25 U5588 6.8 I	MUTTER M 8X1,25 U5588 6.8	TUERCA M 8X1,25 U5588 6.8
45	F01020462	VITE M10X1,5 X20 U5739 A2 IX	BOLT M10X1,5 X 20 U5739 8.8 IX	VIS M10X1,5 X 20 U5739 8.8 IX	SCHRAUBE M10X1,5 X 20 U5739 8.	TORNIL. M10X1,5 X 20 U5739 8.8
46	F01200271	DADO M10X 1,5 U5588 A2 IX	NUT 10 5588 6.8 INOX	ECROU 10 5588 6.8 INOX	MUTTER 10 5588 6.8 INOX	TUERCA 10 5588 6.8 INOX
47	F01020463	VITE M10X1,5 X25 U5739 A2 IX	SCREW 10X25 5739 INOX A2	VIS 10X25 5739 INOX A2	SCHRAUBE 10X25 5739 INOX A2	TORNILLO 10X25 5739 INOX A2
48	F01020434	VITE M 8X1,25X16 U5739 A2 IX	BOLT M 8X1,25X 16 U5739 8.8 IX	VIS M 8X1,25X 16 U5739 8.8 IX	SCHRAUBE M 8X1,25X 16 U5739 8.	TORNIL. M 8X1,25X 16 U5739 8.8
49	G20970140	RONDELLA 20X2X8,5	WASHER 20X2X8,5	RONDELLE 20X2X8,5	UNTERLEGSCHEIBE 20X2X8,5	ARANDELA 20X2X8,5
50	F01410034	ROS.M6 6,4X12,5X1,6 U6592 IX	INOX A2 WASHER D6 UNI 6592	RONDELLE D6 UNI 6592 INOX A2	UNTERLEGSCHEIBE D6 UNI 6592 IN	ARANDELA D6 UNI 6592 INOX A2
51	F01020043	VITE M 6X 1X 60 U5737 8.8 ZN	BOLT 6 X60 5737 8.G GALVANIZED	VIS 6 X60 5737 8.G ZN	SCHRAUBE 6 X60 5737 8.G ZN	TORNILLO 6 X60 5737 8.G ZN
52	F01200233	DADO M 6X 1 U5588 A2 IX	NUT M 6X 1 U5588 IX	ECROU M 6X 1 U5588 I	MUTTER M 6X 1 U5588	TUERCA M 6X 1 U5588
53	F01020419	VITE M 6X1 X 16 U5739 A2 IX	BOLT M6 X1 X 16 U5739 8.8 IX	VIS M6 X1 X 16 U5739 8.8 IX	SCHRAUBE M6 X1 X 16 U5739 8.	TORNIL. M6 X1 X 16 U5739 8.8
54	F01020068	VITE M 8X1,25X40 U5737 8.8 ZN				
55	F01020398	VITE M 6X 1X 12 U5739 8.8 ZN	BOLT M 6X12	VIS M 6X12	SCHRAUBE M 6X12	TORNILLO M 6X12

TAV. 314

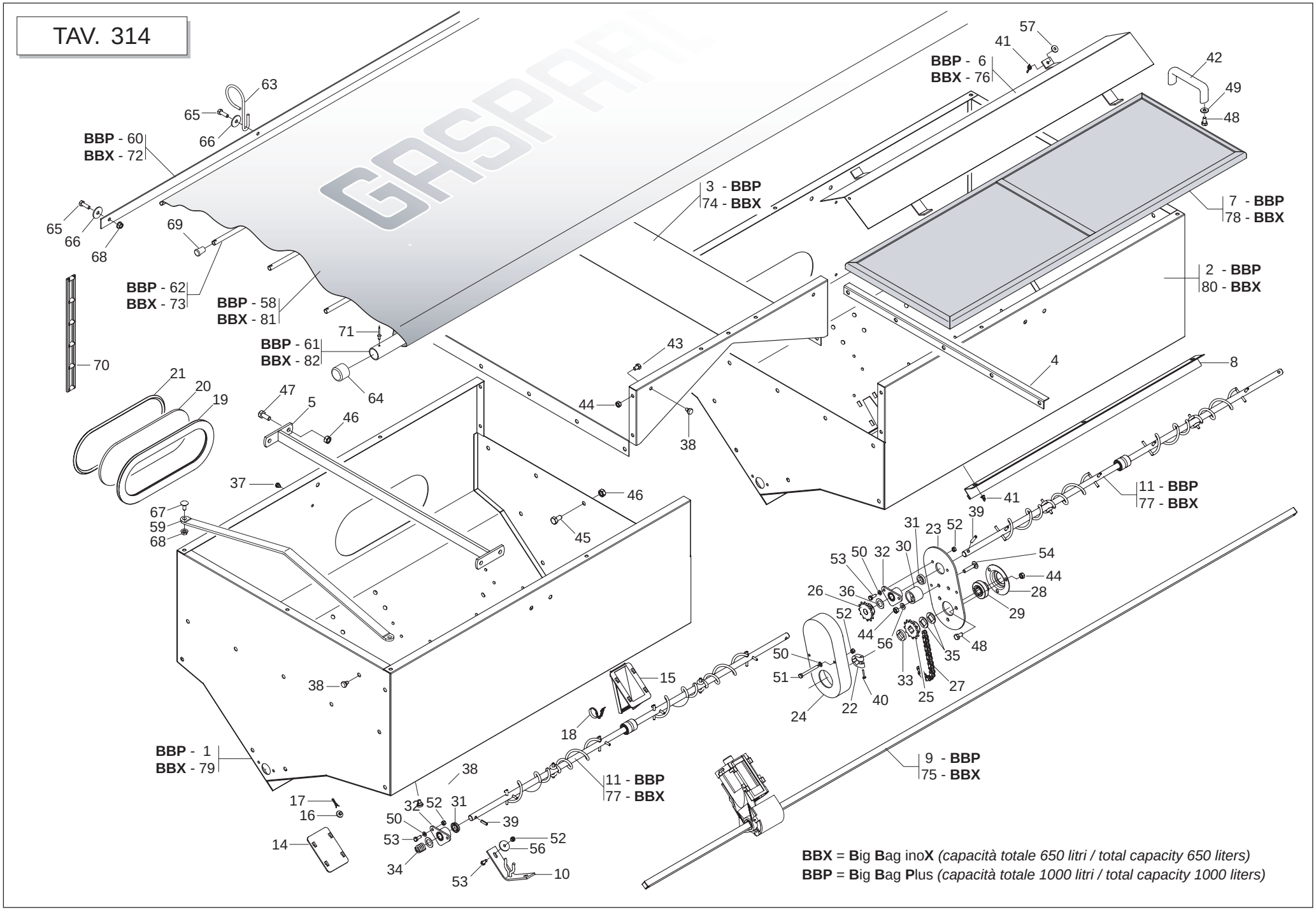
BBP - 60
BBX - 72
BBP - 62
BBX - 73
BBP - 58
BBX - 81
BBP - 61
BBX - 82
BBP - 6
BBX - 76
3 - BBP
74 - BBX
7 - BBP
78 - BBX
2 - BBP
80 - BBX
11 - BBP
77 - BBX
9 - BBP
75 - BBX
BBP - 1
BBX - 79
BBX = Big Bag inoX (capacità totale 650 litri / total capacity 650 liters)
BBP = Big Bag Plus (capacità totale 1000 litri / total capacity 1000 liters)

SERBATOIO SPANDICONCIME UNICO

TAV. 314

Pos.	Cod.	Descrizione	Description	Description	Benennung	Descripcion
56	G20970125	RONDELLA 28X2,5X6,5	WASHER 28X2-5X6-5	RONDELLE 28X2-5X6-5	UNTERLEGSCHEIBE 28X2-5X6-5	ARANDELA 28X2-5X6-5
57	F01420039	ROS.M6 6,4X 24X 2 U6593 IX	WASHER M6 6,4X24X2 U6593 IX	RONDELLE M6 6,4X24X2 U6593 IX	SCHEIBE M6 6,4X24X2 U6593 IX	ARANDELA M6 6,4X24X2 U6593 IX
58	G15273771	TELO COPRISERBATOIO MTE300	HOPPER COVER-SHEET MTE300	TOILE COUVRE-TREMIE MTE300	TRICHTERABDECKTUCH MTE300	ONA PROTEC. TOLVA MTE300
59	G15273632	SUPPORTO TELO COPRISERBATOIO				
60	G15273680	ASTA FISSAGGIO TELO	FIXING ROD	TIGE DE FIXATION	BEFESTIGUNGSTANGE	VARILLA DE FIJACIN
61	G15273660	TUBO TELO COPRISERBATOIO	HOPPER COVER-SHEET TUBE	TUBE TOILE COUVRE-TREMIE	ROHR TRICHTERABDECKTUCH	TUBO ONA PROTEC. TOLVA
62	G15273670	TUBO RINFORZO TELO	REINFORCEMENT ROD	TIGE DE RENFORCEMENT	VERSTZRKUNGSSTANGE	VARILLA DE REFUERZO
63	G65336131	ANELLO TUBO ASPIR.SEMINATORE	SEED DRILL ASPIRATN. TUBE RING	BAGUE TUBE ASPIR. SEMEUR	SAUGROHRRING SZREIHE	ANILLO TUBO ASPIR.SEMBRADOR
64	G66248098	TAPPO CONVOGLIATORE DEPR. SP	AIR PUMP CONVEYOR PLUG SP	BOUCHON CONVOYEUR TURBINE SP	VAKUUM FTRDERPFROPFEN SP	TAPN CONDUCTOR DEPR. SP D
65	F01020457	VITE M8 X1,25X20 U5739 A2 IX	BOLT M8 X1,25X 20 U5739 8.8 IX	VIS M8 X1,25X 20 U5739 8.8 IX	SCHRAUBE M8 X1,25X 20 U5739 8.	TORNIL. M8 X1,25X 20 U5739 8.8
66	F01420049	ROS.M8 8,4X 32X 2 U6593 ZN	WASHER M8 8,4X32X2 U6593 ZG	RONDELLE M8 8,4X32X2 U6593 ZG	SCHEIBE M8 8,4X32X2 U6593 ZG	ARANDELA M8 8,4X32X2 U6593 ZG
67	F01060040	BUL.M 8X1,25X 20 U5732 4.6 ZG	BOLT 8 X20 5732 4.6 GALVANIZED	VIS 8 X20 5732 4.6 ZN	SCHRAUBE 8 X20 5732 4.6 ZN	TORNILLO 8 X20 5732 4.6 ZN
68	F01260043	DADO FLANG.M8 D6923 8.8 ZN	FLANGE NUT M8 DIN 6923 8.8 GAL	ECROU BRIDE .M8 DIN 6923 8.8 Z	GEFLANSCHTE MUTTER M8 DIN6923	TUERCA BRIDA M8 DIN 6923 8.8 Z
69	F05150472	PUNTALE A CAMPANA PVC NERO D10	PVC TIP D.10	EMBOUT PVC D. 10	STTSSELSCHAFT PVC D.10	PUNTAL PVC D.10
70	F06080487	CATENA AGGANCIO TELO IN GOMMA	RUBBER FRAME CONNECTION CHAIN	CHA+NE ACCROCHAGE TOILE EN CAO	KETTE BEFESTIGUNG GUMMITUCH	CADENA ENGANCHE LONA DE CAUCHO
71	F02250123	RIVETTO STR. 4,8X 9 U9200A AL	PULL RIVET 4,8X 9 U9200A ALL	RIVET A RUPTURE 4,8X 9 U9200A	REISSNIETE 4,8X 9 U9200A ALL	REMACHE DESGAR. 4,8X 9 U9200A
72	G15274090	ASTA FISSAGGIO TELO	FIXING ROD	TIGE DE FIXATION	BEFESTIGUNGSTANGE	VARILLA DE FIJACIN
73	G13722250	TUBO RINFORZO TELO COPRISEME	REINFORCEMENT TUBE	TUBE DE RENFORCEMENT	VERSTZRKUNGROHR	TUBO DE REFUERZO
74	G15274680	LAMIERA CENTRALE INOX	UNION UNIT INOX	ELEM. UNION INOX	VERBINDUNGSELEM. INOX	ELEM.UNIËN INOX
75	G13732200	ASSE TRASMISSIONE L.2485	TRANSMISSION AXLE L2485	AXE TRANSMISSION L.2485	sBERTRAGUNGSACHSE L.2485	EJE TRANSMISIN L 2485 A
76	G15274061	TEGOLO 250				
77	G15274080	ASSE AGITAT.S.UNICO 250 COMPL	STIRRER SPINDLE BB250 TANK	AXE AGITATEUR RESERVOIR BB250	SAMENMISCHERACHSE BEH. BB250	EJE AGITAD. DEPS. BB250
78	G15274150	GRIGLIA SERBATOIO	TANK GRID.	GRILLE RESERVOIR	BEHZLTERGITTER	REJILLA DEPS.
79	G15274692	ASS.SERBATOIO SX 250 INOX				
80	G15274702	ASS.SERBATOIO DX 250 INOX				
81	G15274120	TELO COPRISERBATOIO BB	HOPPER COVER-SHEET BB	TOILE COUVRE-TREMIE BB	TRICHTERABDECKTUCH BB	ONA PROTEC. TOLVA BB
82	G15274100	TUBO TELO COPRISERBATOIO	HOPPER COVER-SHEET TUBE	TUBE TOILE COUVRE-TREMIE	ROHR TRICHTERABDECKTUCH	TUBO ONA PROTEC. TOLVA

TAV. 165

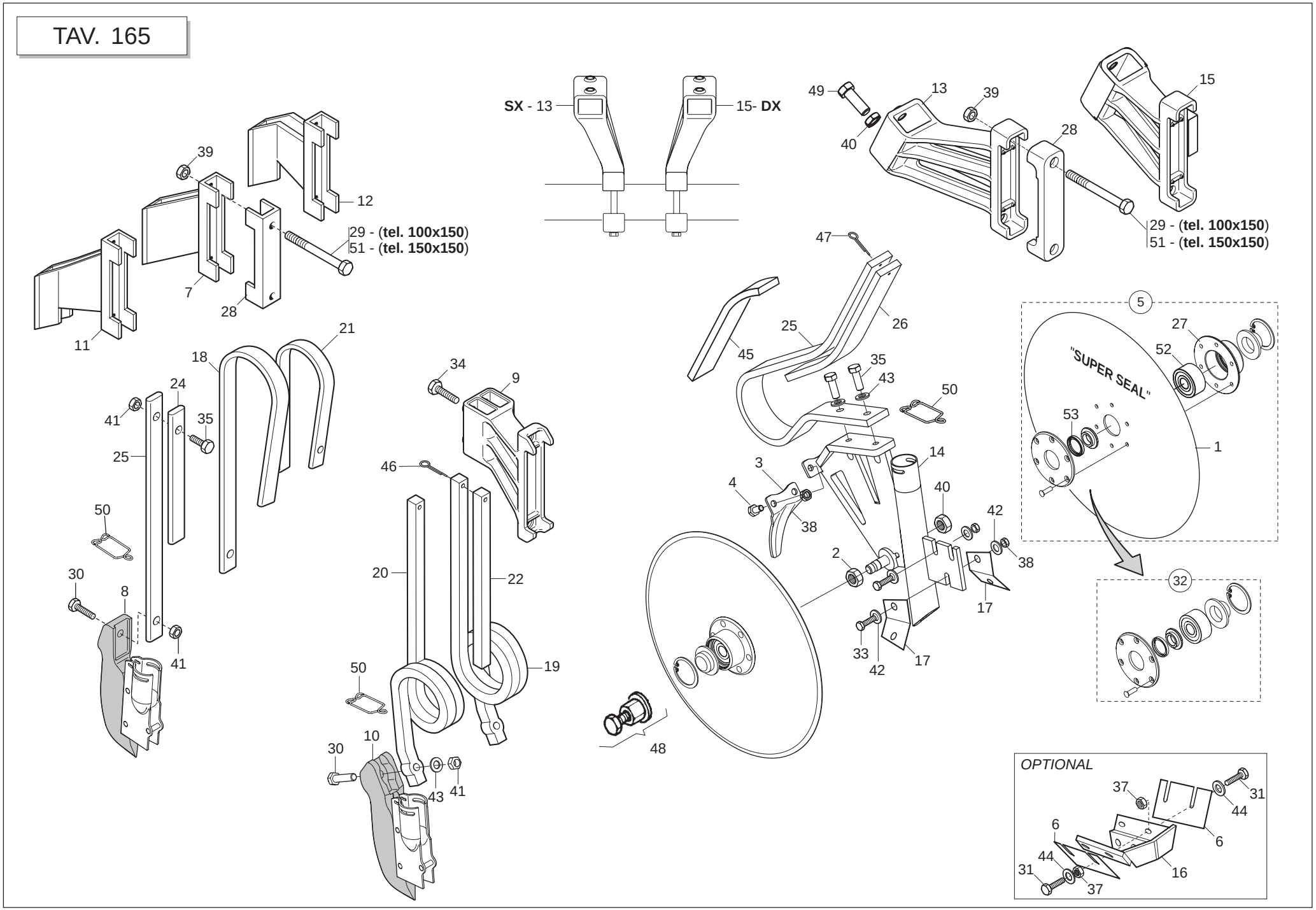

GASPARDO

cod. G19530197

ELEMENTI DI CONCIMAZIONE

TAV. 165

Pos.	Cod.	Descrizione	Description	Description	Benennung	Descripcion
1	G13825091	DISCO ASSOLCATORE D.373	FURROW OPENER DISK D.373	DISQUE D. 373 6 T.D.6	SCHEIBE SZSCHARENREISSER D.373	DISCO SURCADOR D.373
2	G15220540	DADO M16X1,5 SX	NUT M16X1-5 LEFT	ECROU M16X1-5 GCH	MUTTER M16X1-5 LI	TUERCA M16X1-5 IZQ
3	G15225860	PROTEZIONE DISCHI	DISC PROTECTION	PROTECTION DISQUE	DISCSCHUTZ	PROTECCIN DISCO
4	F01020470	VITE M10X 1,5X20 U5739 8.8 ZN	BOLT M 10X20	VIS M 10X20	SCHRAUBE M 10X20	TORNILLO M 10X20
5	G15225500	DISCO ASSOLC.PROTETTO COMPL.	COMPL. PROTECTED DISC COULTER	DISQUE DU SOC PROT+G+ COMPLET	GESCH_TZTE FURCHENFORMSCHEIBE	DISCO SURC.PROTEGIDO COMPL.
6	G15422231	RASCHIATERRA DISCO				
7	G15470232	SUPPORTO MOLLA PIATTA 150	FLAT SPRING SUPPORT 150	SUPPORT RESSORT PLAT 150	HALTERUNG FLACHFEDER 150	SOPORTE MUELLE PLANO 150
8	G16670610	FALCIONE ELEM.CONCIMAZ.PIATTA	FLAT FERTILIZATION COULTER ELE	SOC +LEM. FERTILIS. RESSORT PL	S-SCHAR ELEM.D_NGUNG FLACHFEDE	BOTA ELEM.ABONAD. MUELLE PLANO
9	G19203920	SUPP.MOLLA QUADRA DOPPIA POS.				
10	G16670600	FALCIONE ELEM.CONCIMAZ.QUADRA	BASIC SQUARE FERTILIZATION COU	SOC +LEM. FERTILIS. RESSORT CA	S-SCHAR ELEM.D_NGUNG QUADR.FED	BOTA ELEM.ABONAD.MUELLE CUADRA
11	G15471661	SUPPORTO MOLLA PIATTA DX 150	FLAT SPRING SUPPORT R.T 150	SUPPORT RESSORT PLAT DROIT 150	HALTERUNG FLACHFEDER RE 150	SOPORTE MUELLE PLANO DCHO 150
12	G15471671	SUPPORTO MOLLA PIATTA SX 150	FLAT SPRING SUPPORT L.T 150	SUPPORT RESSORT PLAT GAUCHE 15	HALTERUNG FLACHFEDER LI 150	SOPORTE MUELLE PLANO IZQDO 150
13	G19204110					
14	G16670271	SUPPORTO DISCHI CONCIMAZ.				
15	G19204100	SUPP.DX MOLLA DISCHI				
16	G15472290	SUPPORTO RASCHIAT.DISCHI CONC.	MANURE DISKS SOIL SCRAPER SUPP	SUPP. RACLEUR DISQUES FUMAGE	HALTER. ERDSCHABER DsNGUNGSSCH	SOPORTE RASCADOR DISCOS ABONO
17	G15472301	RASCHIATERRA INTERNO				
18	G18901092	GAMBO CONCIMAZ.MOLLA PIATTA SP	FLAT SPRING MANURING LEG SP	TIGE FUMAGE RESSORT PLAT SP	SCHAFT DsNGUNG FLACHE FEDER SP	VæSTAGO ABONO MUELLE CHATO SP
19	G18902770	MOLLA CONCIMAZIONE 20X20 DX	RIGHT MANURING SPRING 20X20	RESSORT FUMAGE 20X20 DRT	FEDER DsNGUNG 20X20 RE	MUELLE ABONO 20X20 DER
20	G18902780	MOLLA CONCIMAZIONE 20X20 SX	LEFT MANURING SPRING 20X20	RESSORT FUMAGE 20X20 GCH	FEDER DsNGUNG 20X20 LI	MUELLE ABONO 20X20 IZQ
21	G18902861	RINF.MOLLA PIATTA CONCIM.SP	MANUR.PLATE SPRING REINFORCE.S	RENF. RESSORT PLAT FUMAGE SP	VERSTZRKUNG FLACHFEDER DsNGUNG	REFUERZO MUELLE ABONO SP
22	G18903200	FERMO SPIRALE	SPIRAL STOP	ARRET SPIRALE	FESTSTELLVORRICHTUNG SPIRALE	BLOQUEO ESPIRAL
23	G18903210	MOLLA CONCIM.FILE DISPARI	ODD NUMBER ROW MANUR.SPRING	RESS. FUMAGE RANGEES IMPAIRES	FEDER DsNGUNG UNGERADE REIHEN	MUELLE ABONO FILAS IMPARES
24	G18903220	RINF.MOLLA CONCIM.FILE DISP.	ODD NUM. ROW MANUR.SPRING REIN	RENF. RESS. FUMAGE RANGEES IMP	VERST. FEDER DsNG. UNGERADE RE	REFUERZO MUELLE ABONO FILAS IM
25	G18903821	MOLLA CONCIMAZIONE				
26	G18903901	RINFORZO MOLLA CONCIMAZIONE				
27	G15223651	SUPPORTO CUSCINETTO DISCO	DISK BEARING SUPPORT	SUPPORT PALIER DISQUE	SCHEIBENLAGERBsCHSE	SOPORTE COJINETE DISCO
28	G19204030	SCONTRO FISS.150 2F D15				
29	F01020225	VITE M14X 2X160 U5737 8.8 BR	BOLT M 14 X160 5737 8.G	VIS M 14 X160 5737 8.G	SCHRAUBE M 14 X160 5737 8.G	TORNILLO M 14 X160 5737 8.G
30	F01020156	VITE M12X1,75X50 U5737 8.8 ZN	BOLT12X50 5737 8.G GALVANIZED	VIS 12X50 5737 8.G ZN	SCHRAUBE 12X50 5737 8.G ZN	TORNILLO 12X50 5737 8.G ZN
31	F01020403	VITE M 6X 1X 16 U5739 8.8 ZN	BOLT M 6X16	VIS M 6X16	SCHRAUBE M 6X16	TORNILLO M 6X16
32	G15226600	KIT X DISCO SUPER SEAL				
33	F01020476	VITE M10X 1,5X30 U5739 8.8 ZN	BOLT M 10X30	VIS M 10X30	SCHRAUBE M 10X30	TORNILLO M 10X30
34	F01020508	VITE M12X1,75X25 U5739 8.8 ZN	BOLT M 12X25	VIS M 12 X 25	SCHRAUBE M 12 X 25	TORNILLO M 12 X 25
35	F01020512	VITE M12X1,75X35 U5739 8.8 ZN	SCREW M 12X35	VIS M 12X35	SCHRAUBE M 12X35	TORNILLO M 12X35
36	F01020514	VITE M12X1,75X40 U5739 8.8 ZN	BOLT M12X1,75X40	VIS M12X1,75X40	SCHRAUBE M12X1,75X40	TORNILLO M12X1,75X40
37	F01200232	DADO M 6X 1 U5588 6.8 ZN				
38	F01200270	DADO M10X 1,5 U5588 6.8 ZN	NUT M10	ECROU M10	MUTTER M10	DADO M10
39	F01200306	DADO M14X 2 U5588 6.8 ZN	NUT M14X2	ECROU M14X2	MUTTER M14X2	DADO M14X2
40	F01200442	DADO M16X 1,5 U5589 6.8 ZN	NUT 16X1-5 UNI 5589 6.8 GALVAN	ECROU 16X1-5 UNI 5589 6.8 ZN	MUTTER 16X1-5 UNI 5589 6.8 ZN	TUERCA 16X1-5 UNI 5589 6.8 ZN
41	F01220048	DADO M12X1,75 D980 8 ZN	SELF LOCKING NUT M12X1,75 980V	ECROU AUTOBL. M12X1,75 980-V	SIEHE 00553312	DADO AUTOBL. M12X1,75 980-V
42	F01410064	ROS.M10 10,5X 20X 2 U6592 ZN	WASHER 10,5X21	RONDELLE 10,5X21	SCHEIBE 10,5X21	ARANDELA 10,5X21
43	F01410076	ROS.M12 13X 24X2,5 U6592 ZN	PLANE WASHER D12 UNI 6592 ZN	RONDELLE D12 UNI 6592 ZN	SCHEIBE D12 UNI 6592 ZN	ARANDELA D12 UNI 6592 ZN
44	F01420036	ROS.M6 6,4X 18X 2 U6593 ZN	FLAT WASHER 6-6X 18X2 6593 ZN	ROND. PLATE 6-6X 18X2 6593 ZN	SCHEIBE 6-6X 18X2 6593 ZN	ARAND. PLANA 6-6X 18X2 6593 ZN
45	G16670630	SPESSORE MOLLA DISCHI CONCIM.	SHIMS	CALE	ZWISCHENLEGSCHEIBE	ESPACIADOR
46	F02200229	COPIGLIA 5X 45 U1336 ZN	SPLIT PIN 5 X45 1336 GALVAN.	GOUPILLE 5 X45 1336 ZN	SPLINT 5 X45 1336 ZN	PASADOR 5 X45 1336 ZN
47	F02200228	COPIGLIA 5X 35 U1336 ZN	SPLIT PIN 5 X35 1336 GALVAN.	GOUPILLE 5 X35 1336 ZN	SPLINT 5 X35 1336 ZN	PASADOR 5 X35 1336 ZN
48	G15225240	ESTRATTORE DISCHI ELEMENTO MT	SEED PLATE EXTRACTOR ELEM. MT	EXTRACTEUR DISQUE ELEMENT MT	SCHEIBENAUSZIEHER ELEMENT MT	EXTRACTOR DISCOS ELEMENTO MT
49	F01020568	VITE M16X 2X45 U5739 8.8 ZN	BOLT M 16X 2X45 U5739 8.8 ZG	VIS M 16X 2X45 U5739 8.8 ZG	SCHRAUBE M 16X 2X45 U5739 8.8	TORNILLO M16X 2X45 U5739 8.8
50	G18903911	MOLLA FERMO TUBO D.35	PIPE LOCK SPRING D.35	RESSORT ARR-T TUBE D.35	ROHRSPERRFEDER D.35	MUELLE TOPE TUBO D. 35
51	F01020236	VITE M14X 2X220 U5737 8.8 BR	SCREW M14X2X220 U5737 8.8 BR	VIS M14X2X220 U5737 8.8 BR	SCHRAUBE M14X2X220 U5737 8.8	TORNILLO M14X2X220 U5737 8.8
52	F04010084	CUSC.D17D47 B22,2 3303 LLU/DDU	BEARING 3303 2RS	PALIER 3303 2RS	LAGER 3303 2RS	COJINETE 3303 2RS
53	F03011075	AN. TENUTA B1OF 24X32X4	SEALING RING G24X32X4	BAGUE D'ETANCHEITE G24X32X4	DICHTRING G24X32X4	ANILLO AISLADOR G24X32X4

TAV. 204

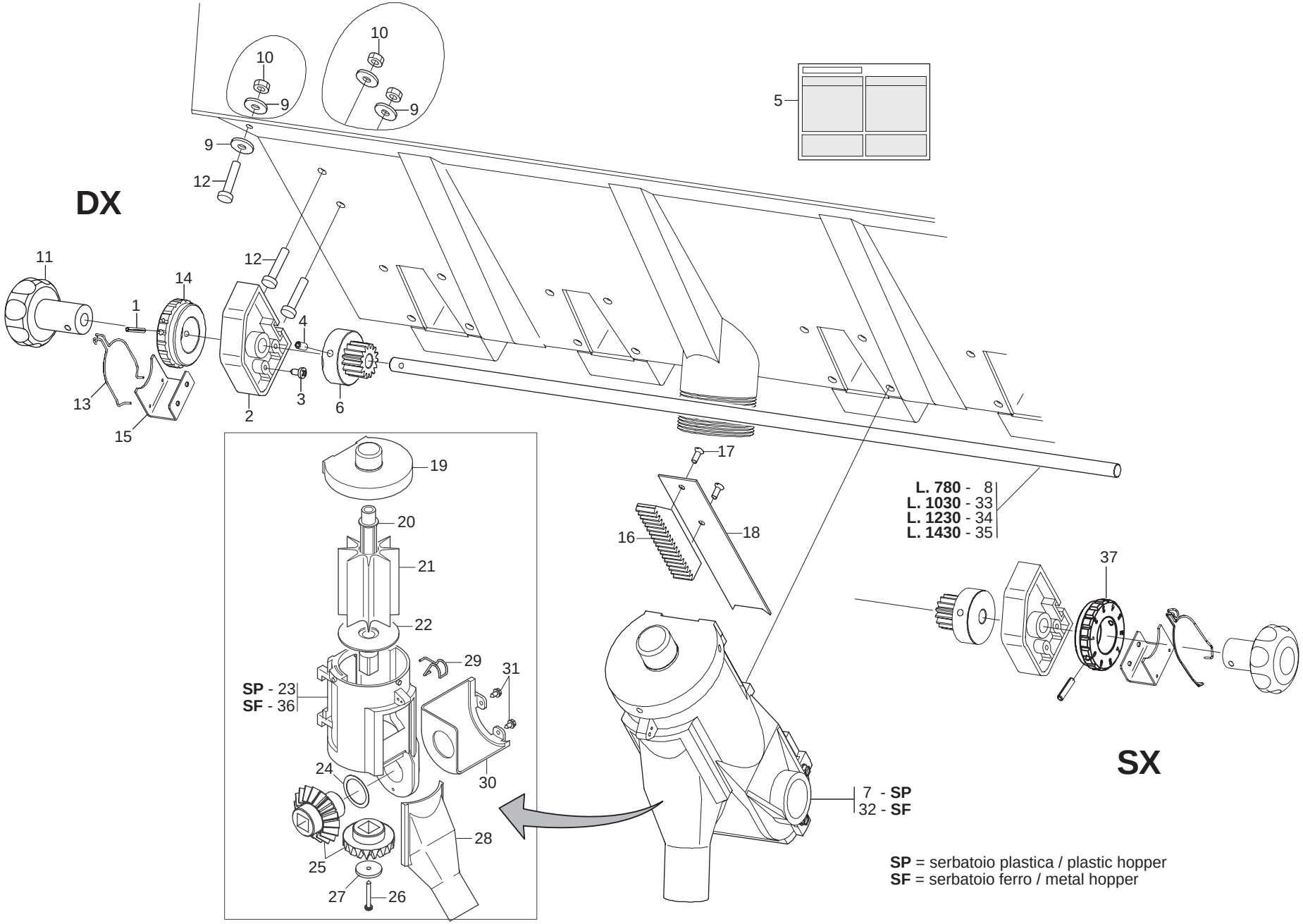

GASPARDO

SPEEDY SET

TAV. 204

Pos.	Cod.	Descrizione	Description	Description	Benennung	Descripcion
1	F02100066	SPINA E.P. 4X 36 U6873 C70 BR				
2	G19003660	SUPPORTO	SUPPORT	SUPPORT	HALTERUNG	SOPORTE
3	F01070061	VIT.A.3,9X1,34X 9,5 6954 4.8NI				
4	F01050083	VIT.M 5X 0,8X 12 U5927 A2 IX				
5	G19702951	DECAL.TAB.DISTRIB.SPEEDY-SET	SPEEDY-SET DISTRIB. CHART STI	DECALC.TABLEAU DISTRIB. SPE.-S	ABZIEHB. TAB.APPARAT SPEEDY-SE	CAL.TABLA DISTRIB. SPEEDY-SET
6	G19003680	INGRANAGGIO Z.15	GEAR Z 15	ENGRENAGE Z 15	ZAHNRAD Z 15	ENGRANAJE Z 15
7	G16670040	DISTR.COMPL.8PALE SPEEDY SET P	COMPL.PLA.SPEEDY SET DISTR.8R	MINIMAX COMPL 8C PLA SPEEDYSET	KOMPL.DOSIER.SPEEDY SET PLA.8S	DISTR.COMP.SPEEDY SET PLA.8AL.
8	G16670320	TONDO D.10X780	D.10X780 ROUND	ROND D.10X780	RUNDEISEN D.10X780	BARRA REDONDA D. 10X780
9	F01420038	ROS.M6 6,4X 18X 2 U6593 IX	WASHER M6 6,4X18X2 U6593 IX	RONDELLE M6 6,4X18X2 U6593 IX	SCHEIBE M6 6,4X18X2 U6593 IX	ARANDELA M6 6,4X18X2 U6593 IX
10	F01200233	DADO M 6X 1 U5588 A2 IX	NUT M 6X 1 U5588 IX	ECROU M 6X 1 U5588 I	MUTTER M 6X 1 U5588	TUERCA M 6X 1 U5588
11	G19003670	MANOPOLA SPEEDY SET	SPEEDY HANDLE SET	POIGN+E SPEEDY SET	GRIFF SPEEDY SET	EMPUĐADURA SPEEDY SET
12	F01020419	VITE M 6X1 X 16 U5739 A2 IX	BOLT M6 X1 X 16 U5739 8.8 IX	VIS M6 X1 X 16 U5739 8.8 IX	SCHRAUBE M6 X1 X 16 U5739 8.	TORNIL. M6 X1 X 16 U5739 8.8
13	G65336055	MOLLA SPEC.REGOL.SPAND. SP	SPEC SPRING MAN. SPR. ADJUSTM.	RESSORT SPEC. REGL. EP. ENTRAI	SPEZIALFEDER STREUEREINSTELLUN	MUELLE ESPEC. REGUL. ABONADORA
14	G19003720	GHIERA REGOLAZIONE SX	LEFT ADJUSTMENT KNURLED NUT	MANCHON DE REGLAGE GCH	EINSTELLMUTTER LINKS	ROSCA REGULACION IZQUIERDA
15	G16670140	SUPPORTO MOLLA REGOLATORE	REGULATOR SPRING SUPPORT	SUPPORT RESSORT R+GULATEUR	HALTERUNG EINSTELLFEDER	SOPORTE MUELLE REGULADOR
16	G19003690	CREMAGLIERA	RACK	CR+MAILL+RE	ZAHNSTANGE	CREMALLERA
17	F01080032	VITE M 4X 0,7X10 U7688 A2 IX	SCREW M4X 0,7X10 U7688 A2 IX	VIS M4X 0,7X10 U7688 A2 IX	SCHRAUBE M4X 0,7X10 7688 A2 IX	TORNILLO M4X0.7X10 U7688 A2 IX
18	G16670100	REGOLATORE APERTURA	OPENING REGULATOR	REGULATEUR OUVERTURE	TFFNUNGSEINSTELLER	REGULADOR ABERTURA
19	G19003700	COPERCHIO SPEEDY SET	COVER SPEEDY SET	COUVERCLE SPEEDY SET	DECKEL SPEEDY SET	TAPA SPEEDY SET
20	G66248173	ASSE DISTR.SPAND. SP	MANURE SPREADER DISTR. SPINDLE	AXE DISTRIBUTEUR EP.ENGRAIS SP	ACHSE SZAPPARAT STREUER SP	EJE DISTR. ABON. SP
21	G66248172	DOSATORE DISTR.SPAND. SP	MAN.SPR. SEED METERING DEVICE	DOSEUR DISTRIBUTEUR EP. ENGRAI	DOSIERER DsNGERSTREUER. SP	DOSIFICADOR DISTR.ABON. SP
22	G66248211	PERNO RONDELLA FUSA SPAND. SP	MAN. SPR. CAST WASHER PIN. SP	PIVOT RONDELLE MOULEE EP. ENGR	ZAPFEN LOSE UNTERLEGSCHEIBE ST	PERNO ARANDELA FUNDIDA ABONAD
23	G19002920	CORPO DISTRIBUTORE SPANDI PLA.	PLA. F.SPREADER DISTRIB.CASING	CORPS DISTRIBUTEUR EPAND.	VERTEILUNGSKTRPER STREUER PLA.	CUERPO DIST. ABONADORA PLæS.
24	G18701500	RONDELLA 29,5 X38 X0,3	WASHER 29,5 X 38 X 0,3	RONDELLE 29,5 X38 X0,3	UNTERLEGSCHEIBE 29,5X38X0,3	ARANDELA 29,5 X38 X0,3
25	G20860126	KIT INGR DISTR CONCIME (2+2)	KIT- MAN. DISTR. GEARS	COUPLE CON DISTR ENGRAIS (2+2)	KIT ZAHNRZDER DsNGERSTREUER	SET ENGRANAJES DISTRIB. ABONO
26	F01070075	VIT.A.4,2X1,41X 38 6954 4.8NI	BOLT 4-2X38 DIN 7981	VIS 4-2X38 DIN 7981	SCHRAUBE 4-2X38 DIN 7981	TORNILLO 4-2X38 DIN 7981
27	G20970097	RONDELLA 32X3X4,5	WASHER 32X3X4-5	RONDELLE 32X3X4-5	UNTERLEGSCHEIBE 32X3X4-5	ARANDELA 32X3X4-5
28	G66248178	SCIVOLO DISTR.SPAND. SP	CHUTE- MANURE-SPREADER DISTRIB	LANCOIR DISTRIBUTION EP. ENGR.	DsNGERSTREUER RUTSCHE SP	PLANO INCLINADO DISTR. ABON. S
29	G65336062	MOLLA SPEC.SCIV.DISTR.SPAND.SP	SPEC SPRING - MAN. SPR. DISTR.	RESS. SPEC. LANCOIR DISTR. EP.	SPEZ.FEDER RUTSCHE SZAPP. STRE	MUELLE ESPEC.PLANO INCL.DISTR.
30	G19002850	PROTEZIONE PIGNONE	PINION GUARD	PROTECTION PIGNON	RITZELSCHUTZ	PROTECCIN PI¾N PR
31	F01070011	VIT.A.4,2X1,41X 9,5 6950 4.8NI	BOLT- SELF-TAPPING 4-2X9-5T.E.	VIS AUTOTAR. 4-2X9-5 T. E. COU	SELBSTSCHNEID. SCHRAUBE 4-2X9-	TORNILLO AUTORROSC. 4-2X9-5
32	G13722330	DISTR.COMPL.8PALE SPEEDY SET F	COMPL.SPEEDY 8-BLADE DISTR. SE	DISTR.COMPL.8PALETTES SPEEDY S	SAATGUTAUS.8SCH.KOMPL.SPEEDY S	DISTR.COMPL.8PALETAS SPEEDY SE
33	G16670330	TONDO D.10X1030	D.10X1030 ROUND	ROND D.10X1030	RUNDEISEN D.10X1030	BARRA REDONDA D. 10X1030
34	G16670340	TONDO D.10X1230	D.10X1230 ROUND	ROND D.10X1230	RUNDEISEN D.10X1230	BARRA REDONDA D. 10X1230
35	G16670350	TONDO D.10X1430	D.10X1430 ROUND	ROND D.10X1430	RUNDEISEN D.10X1430	BARRA REDONDA D. 10X1430
36	G66248176	CORPO DISTR.SPAND. SP	MANURE SPREADER DISTR. CASING	CORPS DISTRIB. EP. ENGRAIS SP	VERTEILUNGSKTRPER STREUER SP	CUERPO DISTR. ABON. SP
37	G19003710	GHIERA REGOLAZIONE DX	RIGHT ADJUSTMENT KNURLED	BAGUE REGLAGE DROITE	EINSTELLMUTTER RE	CONTRATUERCA REGULACIN DER.

TAV. 191

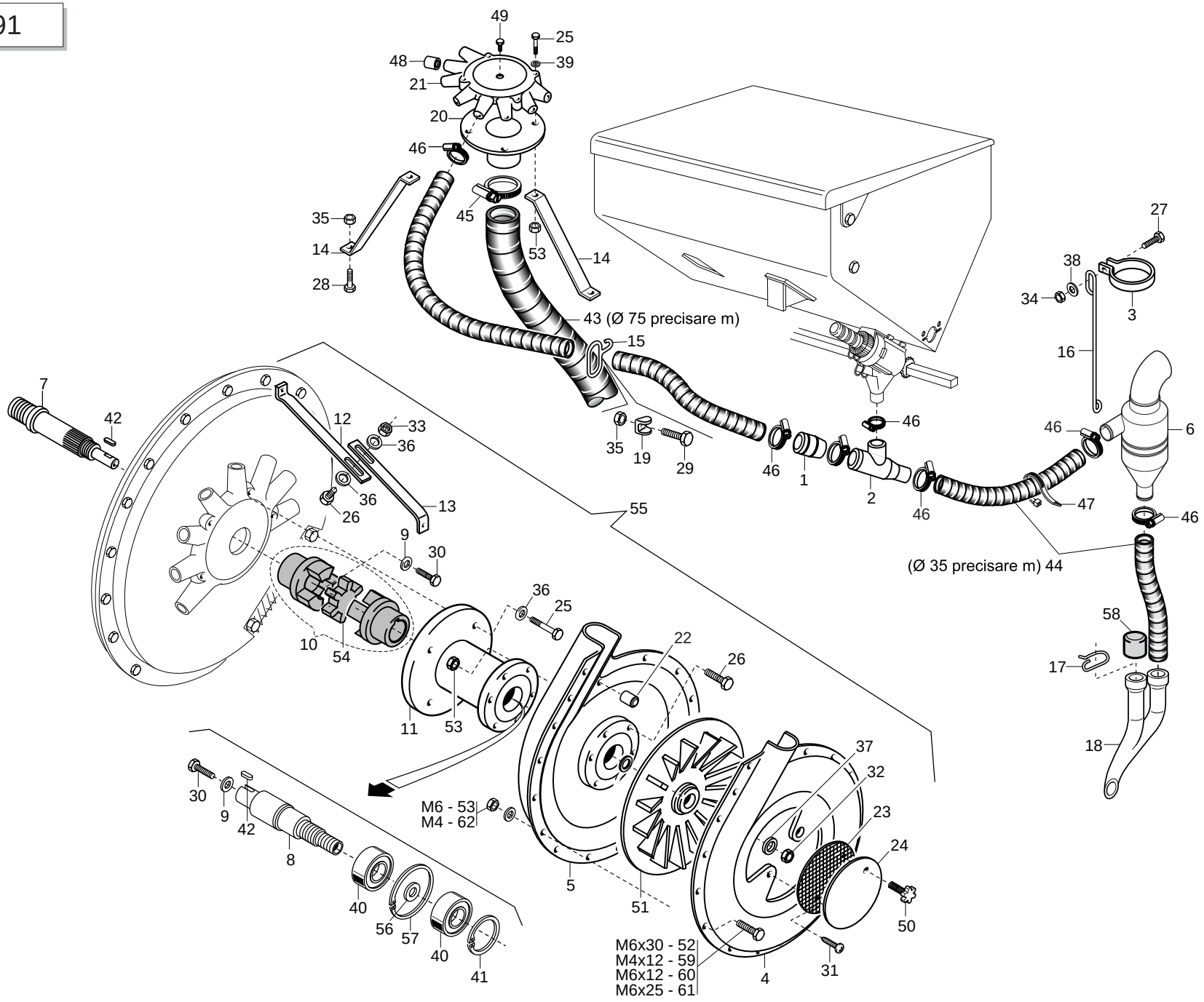

GASPARDO

CONCIMAZIONE PNEUMATICA

TAV. 191

Pos.	Cod.	Descrizione	Description	Description	Benennung	Descripcion
1	G13912101	UGELLO CONCIMAZIONE PNEUMATICA	PNEUMATIC FERTIL. NOZZLE	BUSE FUMAGE PNEUMATIQUE	DsSE PNEUMATISCHE DsNGUNG	BOQUILLA DE ABONO NEUMATICA
2	G13912131	TUBO CONCIMAZIONE PNEUMATICA	PIPE PNEUMATIC FERTILISATION	TUBE FUMAGE PNEUMATIQUE	ROHR PNEUMATISCHE DsNGUNG	TUBO DE ABONO NEUMAT.
3	G13912350	FASCETTA VASO ESPANSIONE	EXPANSION CHAMBER CLAMP	COLLIER VASE EXPANSION	SCHELLE EXPANSIONSGEFZSS	ABRAZADERA DEPSITO DE EXPANSIF
4	G13912460	COPRIVENTOLA LATO SCHIENALE	BACK FAN PROTECTION	PROTECTION ROTOR DOSSIER	RUECKENLAUFRADSCHUTZ	PROTECCIN VENTILADOR RESPALDOA
5	G13912470	COPRIVENTOLA LATO MOTORE	MOTOR FAN PROTECTION	PROTECTION ROTOR MOTEUR	MOTORLAUFRADSCHUTZ	PROTECCIN VENTILADOR MOTOR A
6	G13912512	VASO ESPANSORE D.35-50	D.35-50 EXPANSION TANK	VASE EXPANSION D.35-50	EXPANSIONSGEFZSS D.35-50	DEPSITO DE EXPANSIN D.35-50
7	G15450390	PULEGGIA CONDOTTA	DRIVEN PULLEY D.28	POULIE ENTRAINEE D. 28	GETRIEBENE SCHEIBE D.28	POLEA CONDUCIDA D.28
8	G15450400	PULEGGIA CONCIMAZ.PNEUMATICA	DRIVEN PULLEY	POULIE ENTRAINEE	GETRIEBENE SCHEIBE	POLEA CONDUCIDA
9	G15450410	RONDELLA X GIUNTO ELASTICO	LOCK WASHER	RONDELLE DE BLOCAGE	SPERRSCHEIBE	ARANDELA DE BLOQUEO
10	G15450420	GIUNTO ELASTICO LAVORATO	LOCK COUPLING	JOINT DE BLOCAGE	SPERRKUPPLUNG	JUNTA DE BLOQUEO
11	G15450431	FLANGIA SUPP.CONC.PNEUM.	FLANGE SUPPORT	BRIDE SUPPORT	LAGERFLANSCH	BRIDA DE SOPORTE
12	G15470410	RINFORZO ANTERIORE	FRONT REINFORCEMENT	RENFORCEMENT AVANT	VORDERE VERSTZRKUNG	REFUERZO DELANTERO
13	G15470420	RINFORZO POSTERIORE	REAR REINFORCEMENT	RENFORCEMENT ARRIERE	HINTERE VERSTZRKUNG	REFUERZO TRASERO
14	G15471471	SUPPORTO CONVOGLIATORE	CONVEYOR SUPPORT	SUPPORT CONVOYEUR	HALTERUNG FTRDERER	SOPORTE TRANSPORTADOR
15	G18901960	GUIDATUBI PER 3 TUBI	PIPE GUIDE FOR 3 PIPES	GUIDE-TUBES POUR 3 TUBES	ROHRFsHRUNG FsR 3 ROHRE	GUA TUBOS PARA 3 TUBOS G
16	G18902650	MOLLA SUPP.VASO ESPANSIONE	EXPANSION TANK SUPPORT SPRING	RESSORT SUPP. VAS EXPANSION	OB. FEDER EXPANSIONSGEFZSS	MUELLE SOP. DEPSITO DE EXPANSA
17	G18903180	MOLLA CONVOGLIATORE MICRO	MICRO CONVEYOR SPRING	RESSORT CONVOYEUR MICRO	FEDER MIKRO FTRDERER	MUELLE CONDUCTOR MICRO
18	G19002580	RACCORDO FINALE CONCIMAZ.PNEUM	PNEUMAT. MAN. SPR. END UNION	RACCORD FINAL FUMAGE PNEUMAT.	ENDANSCHLUSS PNEUM. DsNGUNG	UNIN FINAL DE ABONAD. NEUMAT.R
19	G22230264	RONDELLA TUBI DEPR.	AIR PUMP PIPE WASHER	RONDELLE TUBES DISPOSITIF DE D	UNTERLEGSCHEIBE VAKUUMPUMPENRO	ARANDELA TUBOS BOMBA VACO. S
20	G23440551	FLANGIA CONVOGLIATORE HL/ID	CONVEYOR FLANGE HL/ID	BRIDE CONVOYEUR HL/ID	FLANSCH FTRDERER HL/ID	BRIDA CONDUCTOR HL/ID
21	G23440553	CONVOGLIATORE D.35 HL/ID	CONVEYOR- D.35 HL/ID	CONVOYEUR D. 35 HL/ID	FTRDERER D.35 HL/ID	CONDUCTOR D.35 HL/ID
22	G23440562	DISTANZ.GUSCI SOFFIANTE HL/ID	BLOWER SHELL SPACER HL/ID	ENTRETOISE COQUES SOUFFLANTE H	DISTANZSTsCK SCHALEN GELBZSE H	DISTANC. CASCARAS SOPLAD. HL/I
23	G23440563	GRIGLIA DI PROTEZIONE HL/ID	PROTECT. GRID HL/ID	GRILLE DE PROTECTION HL/ID	SCHUTZGITTER HL/ID	REJILLA DE PROTECCIN HL/ID G
24	G23440564	COPERCHIO CHIUSURA SOFF. HL/ID	BLOWER CLOSING COVER . HL/ID	COUVERCLE FERMETURE SOUFFL. HL	ABSCHLUSSDECKEL GEBL. HL/ID	TAPA CIERRE SOPL. HL/ID
25	F01020048	VITE M 6X 1X 75 U5737 8.8 ZN	BOLT 6 X75 5737 8.G GALVANIZ.	VIS 6 X75 5737 8.G ZN	SCHRAUBE 6 X75 5737 8.G ZN	TORNILLO 6x75 5737 8.G ZN
26	F01020404	VITE M 6X 1X20 U5739 8.8 ZN	BOLT 6X20 5739 8.G GALVANIZED	VIS 6X20 5739 8.G ZN	SCHRAUBE 6X20 5739 8.G ZN	TORNILLO 6X20 5739 8.G ZN
27	F01020445	VIT.M 8X1,25X 30 U5739 8.8 ZN	BOLT M 8X30	VIS M 8X30	SCHRAUBE M 8X30	TORNILLO M 8X30
28	F01020472	VITE M10X 1,5X25 U5739 8.8 ZN	BOLT 10X25 5739 8.G GALVANIZED	VIS 10X25 5739 8.G ZN	SCHRAUBE 10X25 5739 8.G ZN	TORNILLO 10X25 5739 8.G ZN
29	F01020476	VITE M10X 1,5X30 U5739 8.8 ZN	BOLT M 10X30	VIS M 10X30	SCHRAUBE M 10X30	TORNILLO M 10X30
30	F01030054	VITE M 8X1,25X16 U5933 10.9 ZD	BOLT 8X16 UNI5933 10.9 GALVANI	VIS 8X16 UNI 5933 10.9 ZN	SCHRAUBE 8X16 UNI 5933 10.9 ZN	TORNILLO 8X16 UNI 5933 10.9 ZN
31	F01080044	VIT.M 5X 0,8X 14 U7688 4 8 ZN	BOLT 5 X14 7688 GALVANIZED	VIS 5 X14 7688 ZN	SCHRAUBE 5 X14 7688 ZN	TORNILLO 5 X14 7688 ZN
32	F01230048	DADO M10X 1,5 D982 8 ZN	NORM.SELF-LOCKING NUT 10 GALVA	ECROU AUTOB.NOR.10 ZN	SELBSTSP. MUTTER NOR. 10 ZN	TUERCA AUTOB. NOR. 10 ZN
33	F01200232	DADO M 6X 1 U5588 6.8 ZN				
34	F01200244	DADO M 8X1,25 U5588 6.8 ZN	NUT M8	ECROU M8	MUTTER M8	DADO M8
35	F01200270	DADO M10X 1,5 U5588 6.8 ZN	NUT M10	ECROU M10	MUTTER M10	DADO M10
36	F01410037	ROS.M6 6,4X12,5X1,6 U6592 ZN	PLANE WASHER D.6	RONDELLE D.6	SCHEIBE D.6	ARANDELA D.6
37	F01410064	ROS.M10 10,5X 20X 2 U6592 ZN	WASHER 10,5X21	RONDELLE 10,5X21	SCHEIBE 10,5X21	ARANDELA 10,5X21
38	F01420048	ROS.M8 8,4X 24X 2 U6593 ZN	PLANE WASHER D.8	RONDELLE D.8	SCHEIBE D.8	ARANDELA D.8
39	F01430047	ROS.M6 6,4X 11X0,7 U8842J ZN	WASHER D6 DIN 6798 D.INT.GALV.	RONDELLE D6 DIN 6798 D. INT. Z	UNT. SCHEIBE D6 DIN 6798 D. IN	ARANDELA D6 DIN 6798 D.INT.ZN
40	F04010165	CUSC.D20 D47 B14 6204,2RSC3	BEARING 6204 2RS	PALIER 6204 2RS	LAGER 6204 2RS	COJINETE 6204 2RS
41	F02050078	ANELLO E. DE 20X 1,2 U7435 C70	SEEGER RING E. 20X1,2 7435 C70	SEEGER 20X 1,2 U7435 C70	SEEGER E. 20X 1,2 U7435 C70	0
42	F02150036	LINGUETTA 6X 6X 20 U6604A	TAB 06X6X20 UNI6604	LANGUETTE 06X6X20 UNI6604	FEDERKEIL 06X6X20 UNI6604	LENGsETA 06X6X20 UNI6604
43	F03100367	TUBO FLESSIBILE PVC DI 75	FLEXIBLE PVC PIPE DI 75	TUBE FLEXIBLE PVC DI 75	75ER SCHLAUCH PVC	TUBO FLEXIBLE PVC DI 75
44	F03100500	TUBO EOLO 35 PU	EOLO PIPE 35 PU	TUBE EOLO 35 PU	ROHR EOLO 35 PU	TUBO EOLO 35 PU
45	F02300023	FASCETTA STRING. 80/100 H.8	PIPE CLAMP 77/95	COLLIER DE SERRAGE 77/95	ROHRSCHELLE 77/95	ABRAZADERA PARA MANGUERA 77/95
46	F02300018	FASCETTA STRING. 25/40 H.8	STRING FASTEN.STRAPS 25/40 H.8	COLLIER DE SERRAGE 25/40 H.8	SCHELLE 25/40 H.8	ABRAZADERA 25/40 H.8
47	F05150060	FASCETTA POLYAMIDE 9X360 31919	POLYAMIDE FASTENING STRAPS 9X3	COLLIER POLYAMIDE 9X350 31919	SCHELLE POLYAMID 9X350 31919	ABRAZADERA POLIAMIDA 9X350 319
48	G66248098	TAPPO CONVOGLIATORE DEPR. SP	AIR PUMP CONVEYOR PLUG SP	BOUCHON CONVOYEUR TURBINE SP	VAKUUM FTRDERPFROPFEN SP	TAPN CONDUCTOR DEPR. SP D
49	F03150664	TAPPO MASCHIO 1/8 ESAGONO	1/8 MALE HEXAGON. PLUG	BOUCHON MALE 1/8 HEXAGONAL	GEWINDEPFROPFEN 1/8 SECHSKANT	TAPN MACHO 1/8 HEXæGONO D
50	F06220034	VOLANTINO M5 X 25 VPA/25	HANDWHEEL M5 X 25 VPA/25	VOLANT M5 X 25 VPA/25	HANDRAD M5 X 25 VPA/25	VOLANTE M5 X 25 VPA/25
51	G67320001	VENTOLA PLASTICA DISCO L80M8	PLASTIC FAN- DISK L80M8	ROTOR PLASTIQUE DISQUE L80M8	SCHEIBE PLASTIKRAD L80M8	VENTILADOR PLæSTICO DISCO L80M
52	F01020037	VITE M 6X 1X 30 U5737 8.8 ZN	BOLT 6 X30 5737 8.G GALVANIZED	VIS 6 X30 5737 8.G ZN	SCHRAUBE 6 X30 5737 8.G ZN	TORNILLO 6 X30 5737 8.G ZN
53	F01220011	DADO M 6X 1 D980 8 ZN	SELF LOCKING NUT M6	ECROU AUTOBL. M6	SELBSTSPERR.MUTTER M6	DADO AUTOBL. M6
54	G58162014	ELEM.ELASTICO DEL GIUNTO 24.24	ELASTIC ELEMENT OF JOINT 24.24	ELEM. ELASTIQUE DU JOINT 24.24	ELAST. KUPPLUNGSELEM. 24.24	ELEM.ELÁSTICO DEL ACOPLAMIENTO
55	G15473770	SOFFIANTE CONC.PNEUM.COMPL.	COMPL. FERTILIZER PNEUMATIC BL	SOUFFLEUR ENGRAIS PNEUMATIQUE	PNEUMATISCHES GEBLZSE KOMPL.	SOPLADOR ABONO NEUM-TICO COMPL
56	F01440012	ROS. 20X28X 2 D988 IX	WASHER 20X28X2 DIN 988	RONDELLE 20X28X2 DIN 988	UNTERLEGSCHEIBE 20X28X2 DIN 98	ARANDELA 20X28X2 DIN 988
57	F02050370	ANELLO E. DI 47X1,75 U7437 C70	SEEGER RING 47X 1,75 U7437 C70	SEEGER E. 47X 1,75 U7437 C70	SEEGERING E. 47X1,75 U7437 C70	ANILLO E. 47X 1,75 U7437 C70
58	G66248098	TAPPO CONVOGLIATORE DEPR. SP	AIR PUMP CONVEYOR PLUG SP	BOUCHON CONVOYEUR TURBINE SP	VAKUUM FTRDERPFROPFEN SP	TAPN CONDUCTOR DEPR. SP D
59	F01020362	VITE M 4X0,7X 12 U5739 8.8 ZN	SCREW 4X12 5739 8.G GALVANIZED	VIS 4X12 5739 8.G ZN	SCHRAUBE 4X12 5739 8.G ZN	TORNILLO 4X12 5739 8.G ZN
60	F01020398	VITE M 6X 1X 12 U5739 8.8 ZN	BOLT M 6X12	VIS M 6X12	SCHRAUBE M 6X12	TORNILLO M 6X12
61	F01020406	VITE M 6X 1X 25 U5739 8.8 ZN	BOLT M 6X25	VIS M 6X25	SCHRAUBE M 6X25	TORNILLO M 6X25
62	F01230016	DADO M 4X 0,7 D982 8 ZN	NORM.SELF-LOCKING NUT 4 GALVAN	ECROU AUTOB.NOR.4 ZN	SELBSTSP. MUTTER NOR. 4 ZN	TUERCA AUTOB. NOR. 4 ZN

TAV. 175

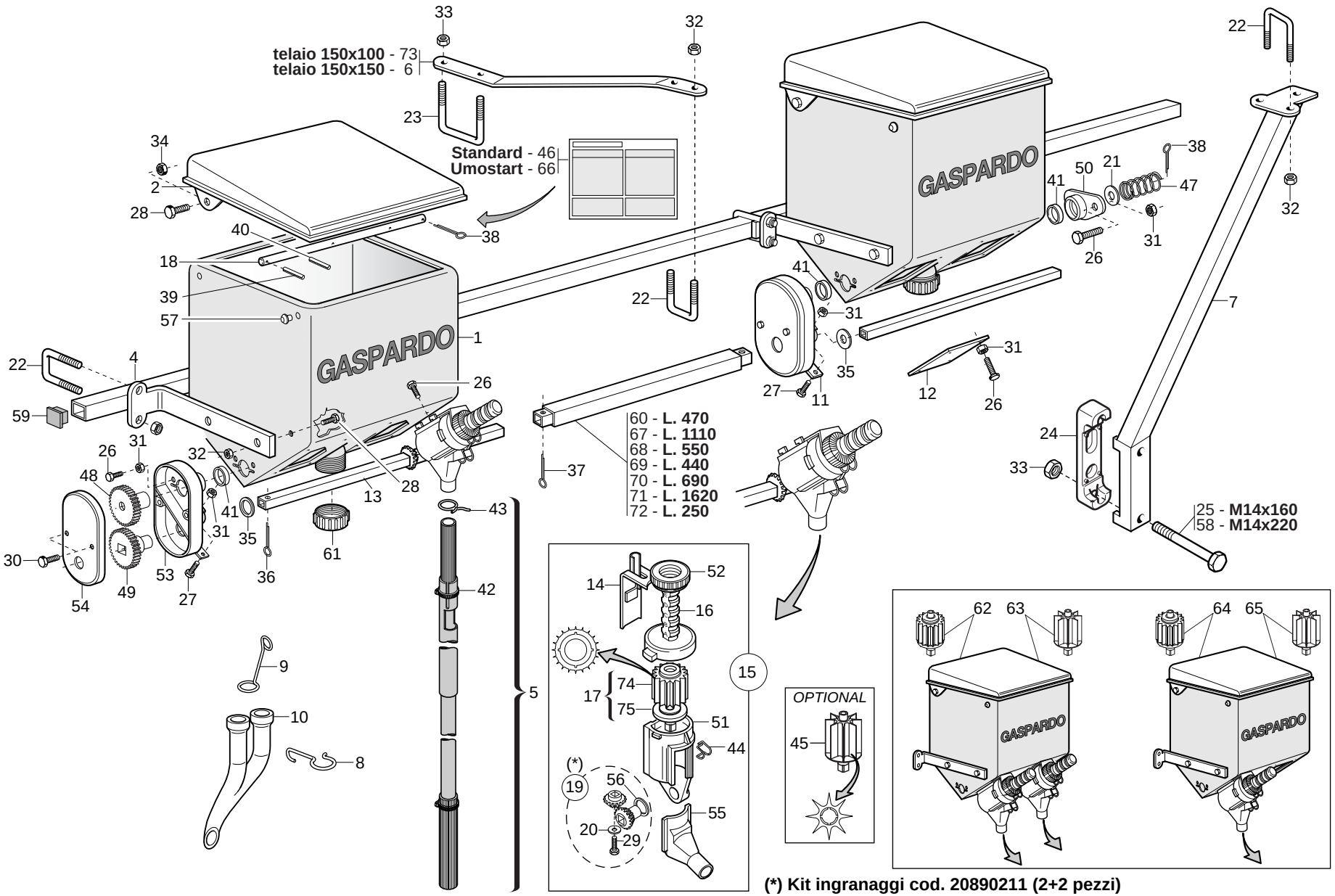

(*) Kit ingranaggi cod. 20890211 (2+2 pezzi)

MICROGRANULATORE

TAV. 175

Pos.	Cod.	Descrizione	Description	Description	Benennung	Descripcion
1	G19002932	SERBATOIO MICRO 250 PLA.	PLASTIC TANK MICRO 250	RESERVOIR MICRO 250 PLASTIQUE	MIKROGRANULATBEHZLTER PLAST.	DEPSITO MICRO 250 PLAST.
2	G15475231	COPERCHIO MICRO 250 PLA.	PLASTIC COVER MICRO 250	COUVERCLE MICRO 250 PLASTIQUE	MIKRO DECKEL 250 PLAST.	TAPA MICRO 250 PLAST.
3	G15475260	SCONTRO SP	STRIKER PLATE SP	BUTEE SP	ANSCHLAG STREUER	ELEMENTO DE EMPALME SP
4	G15475271	SUPPORTO MICRO	MICRO SUPPORT	SUPPORT MICROGRANULATEUR	HALTERUNG MICRO	SOPORTE MICRO
5	G15475331	TUBO DISCESA MICRO SP	PIPE- MICRO DESCENT SP	TUBE DESCENTE MICRO SP	SENKROHR MIKRO SP	TUBO DESCENSO MICRO SP
6	G15475381	TIRANTE CENTRALE SP-ST				
7	G15475411	SUPP.BARRA MICRO M.S.SPAN.	M.S. FERTILISER SPREADER MICRO	SUPPORT BARRE MICRO M.S. EPAND	MIKRO SPINDELHALTERUNG M.S. Ds	SOPORTE BARRA MICRO M.S. ABONA
8	G18903180	MOLLA CONVOGLIATORE MICRO	MICRO CONVEYOR SPRING	RESSORT CONVOYEUR MICRO	FEDER MIKRO FTRDERER	MUELLE CONDUCTOR MICRO
9	G18903191	MOLLA SPEC.ZN DISCESA MICRO	SPEC.SPRING ZN MICRO GUIDE	RESSORT SPEC. ZN GUIDE MICRO	SPEZIALFEDER ZN F_HR.MIKRO	MUELLE ESPEC. ZN GUA MICRO
10	G19002580	RACCORDO FINALE CONCIMAZ.PNEUM	PNEUMAT. MAN. SPR. END UNION	RACCORD FINAL FUMAGE PNEUMAT.	ENDANSCHLUSS PNEUM. DsNGUNG	UNIN FINAL DE ABONAD. NEUMAT.R
11	G20890078	PIASTRA DI COLLEGAMENTO	CONNECTION PLATE	PLAQUE DE RACCORD	VERBINDUNGSPLATTE	PLACA DE CONEXIN P
12	G20890079	PIASTRA DI CHIUSURA	CLOSURE PLATE	PLAQUE DE FERMETURE	ABSCHLUSSPLATTE	PLACA DE CIERRE
13	G20890081	ASSE DISTRIB.MICRO L.445	MICRO DISTR. SPINDLE- L. 445	AXE DISTRIBUTEUR MICRO L. 445	MIKRO STREUERACHSE L 445	EJE DISTRIB.MICRO L.445
14	G20890089	REGOLATORE DI APERTURA	OPENING REGULATOR	REGULATEUR D'OUVERTURE	TFFNUNGSEINSTELLER	REGULADOR DE ABERTURA
15	G20890135	DISTRIB.NYLON COMPL.E SCIVOLO	DISTRIB. NYLON ASSY. AND CHUTE	MINIMAX COMPL 20C MICRO	SZAPPARAT NYLON KOMPL. UND RUT	DISTRIB.NYLON COMPL.Y PLANO IN
16	G20890151	VITE-SCALA GRADUATA	GRADUATED SCALE BOLT	VIS-ECHELLE GRADUEE	SCHRAUBE - GRADSKALA	TORNILLO - ESCALA GRADUADA
17	G20890158	DOSATORE MICRO COMPL.	ROTOR DIST. MICRO 20 GROOVES	ROTOR DOSEUR 20C MICRO	DOSIERER MIKRO KOMPL. 20 SEKT	DOSIFICADOR MICRO COMPL.20 SEC
18	G20890194	ASSE AGITATORE SERB.MICRO 250	STIRRER SPINDLE- MICRO TANK 25	AXE AGITATEUR RESERVOIR MICRO	SAMENMISCHERACHSE BEH.MIKRO 25	EJE AGITADOR DEPS. MICRO 250 A
19	G20890211	KIT INGRANAGGI DISTRIB.MICRO	KIT- MICRO. DISTR. GEARS	COUPLE CON DISTR MICRO (2+2)	KIT ZAHNRZDER MIKROSTREUER	SET ENGRANAJES DISTRIB.MICRO
20	F01420011	ROS.M4 4,3X 16X 1 U6593 ZN	FLAT WASHER 4-3X 16X1-5 6593 G	ROND.PLATE 4-3X 16X1-5 6593 ZN	SCHEIBE 4-3X 16X1-5 6593 ZN	ARAND. PLANA 4-3X 16X1-5 6593
21	G22220073	RONDELLA 28X0,3X16,5	WASHER 28X0-3X16-5	RONDELLE 28X0-3X16-5	UNTERLEGSCHEIBE 28X0-3X16-5	ARANDELA 28X0-3X16-5
22	F20110706	CAV.Q.M10X 1,5X 30 47X 60 ZN	DISK SUPPORT.ELEMENT U BOLT SV	CAVALIER SUPPORT DISQUE SV	VERBINDUNG SCHEIBENHALTERUNG S	PERNO EN U SOP. DISCO SV
23	F20110770	CAV.Q.M14X 2X 50 96X119 ZN	U-BOLT M14X96 - 119 ZN	CAVALIER M14X96 - 119 ZN	VERBINDUNG M14X96 - 119 ZN	PERNO EN U M14X96 - 119 ZN
24	G19204030	SCONTRO FISS.150 2F D15				
25	F01020225	VITE M14X 2X160 U5737 8.8 BR	BOLT M 14 X160 5737 8.G	VIS M 14 X160 5737 8.G	SCHRAUBE M 14 X160 5737 8.G	TORNILLO M 14 X160 5737 8.G
26	F01020397	VITE M 6X 1X 10 U5739 8.8 ZN	BOLT 6X10 5739 8.G GALVANIZED	VIS 6X10 5739 8.G ZN	SCHRAUBE 6X10 5739 8.G ZN	TORNILLO 6X10 5739 8.G ZN
27	F01020403	VITE M 6X 1X 16 U5739 8.8 ZN	BOLT M 6X16	VIS M 6X16	SCHRAUBE M 6X16	TORNILLO M 6X16
28	F01020472	VITE M10X 1,5X25 U5739 8.8 ZN	BOLT 10X25 5739 8.G GALVANIZED	VIS 10X25 5739 8.G ZN	SCHRAUBE 10X25 5739 8.G ZN	TORNILLO 10X25 5739 8.G ZN
29	F01070061	VIT.A.3,9X1,34X 9,5 6954 4.8NI				
30	F01070121	VIT.A.3,9X1,34X 9,5 6955 4.8NI	BOLT 3-9X 9-5 DIN 7982	VIS 3-9X 9-5 DIN 7982	SCHRAUBE 3-9X 9-5 DIN 7982	TORNILLO 3-9X 9-5 DIN 7982
31	F01200232	DADO M 6X 1 U5588 6.8 ZN				
32	F01200270	DADO M10X 1,5 U5588 6.8 ZN	NUT M10	ECROU M10	MUTTER M10	DADO M10
33	F01200306	DADO M14X 2 U5588 6.8 ZN	NUT M14X2	ECROU M14X2	MUTTER M14X2	DADO M14X2
34	F01220033	DADO M10X 1,5 D980 8 ZN	NUT M10X 1,5 D980 8 ZB	ECRO.M10X 1,5 D980 8 ZB	MUTT.M10X 1,5 D980 8 ZB	TUER.M10X 1,5 D980 8 ZB
35	F01410088	ROS.M14 15X 28X2,5 U6592 ZN	WAS.M14 15X 28X2,5 U6592 ZB	RON.M14 15X 28X2,5 U6592 ZB	SCH.M14 15X 28X2,5 U6592 ZB	ARA.M14 15X 28X2,5 U6592 ZB
36	F02200161	COPIGLIA 3X 15 U1336 ZN	SPLIT PIN 3 X15 1336 GALVAN.	GOUPILLE 3 X15 1336 ZN	SPLINT 3 X15 1336 ZN	PASADOR 3 X15 1336 ZN
37	F02200162	COPIGLIA 3X 20 U1336 ZN	SPLIT PIN 3 X20 1336 GALVAN.	GOUPILLE 3 X20 1336 ZN	SPLINT 3 X20 1336 ZN	PASADOR 3 X20 1336 ZN
38	F02200194	COPIGLIA 4X 25 U1336 ZN	SPLIT PIN 4 X25 1336 GALVAN.	GOUPILLE 4 X25 1336 ZN	SPLINT 4 X25 1336 ZN	PASADOR 4 X25 1336 ZN
39	F02100083	SPINA E.P. 5X 24 U6873 C70 BR	PIN EL. 5 X24 DIN 1481	FICHE EL. 5 X24 DIN 1481	SPANNSTIFT 5 X24 DIN 1481	CLAVIJA EL.5 X24 DIN 1481
40	F02100089	SPINA E.P. 5X 36 U6873 C70 BR	PIN EL. 5 X36 DIN 1481	FICHE EL. 5 X36 DIN 1481	SPANNSTIFT 5 X36 DIN 1481	CLAVIJA EL.5 X36 DIN 1481
41	F03011081	GUARNIZIONI LABBRO DE100				
42	F02300016	FASCETTA STRING. 16/27 H.8				
43	G65336041	MOLLA SPEC.ZN STRINGITUBO M80	SPEC.SPRING ZN . PIPE CLAMP M8	RESSORT SPEC. ZN SERRE-TUBE M8	SPEZIALFEDER ZN ROHRSCHELLE M8	MUELLE ESPEC. ZN APLASTA TUBOS
44	G65336046	MOLLA SPEC.ZN SCIVOLO M80	SPEC SPRING ZN CHUTE M80	RESSORT SPEC. ZN LANCOIR M80	SPEZIALFEDER ZN RUTSCHE M80	MUELLE ESPEC. ZN PLANO INCLINA
45	G22250240	DOSATORE COMPL. SV	MICRO DISTR.ROTOR 8 GROOVES	ROTOR DOSEUR 8C MICRO	DOSIERER KOMPL. SV	DOSIFICADOR COMPL. SV
46	G19703300	DECAL.TABELLA MICRO ST250	MICRO CHART STICKER	DECALC. TABLEAU MICRO	ABZIEHB. TABELLE MIKOR	CAL.TABLA MICRO
47	G65338043	MOLLA COMP.ZN SERB. M80	ZN TANK COMP.SPRING M80	RESSORT COMPL. ZN RESERVOIR M8	DRUCKFEDER ZN BEHZLTER M80	MUELLE COMP.ZN DEPS. M80 A
48	G66248119	RUOTA DENTATA Z-24 M80	GEAR-WHEEL Z-24 M80	ROUE DENTEE Z-24 M80	ZAHNRAD Z-24 M80	RUEDA DENTADA Z-24 M80
49	G66248120	RUOTA DENT.FORO QUAD.Z-24 M80	GEAR-WHEEL- SQUARE HOLE- Z-24	ROUE DENTEE TROU CARRE Z-24 M8	RAD VERZAHNT VIERKANTLOCH.Z-24	RUEDA DENT.ORIFICIO CUAD.Z-24
50	G66248121	BOCCOLA CON FLANGIA M80	BUSHING W/ FLANGE M80	SUPPORT AVEC BRIDE M80	BsCHSE MIT FLANSCH M80	CASQUILLO CON BRIDA M80
51	G66248123	CORPO DISTRIBUZIONE M80	DISTRIBUTION CASING M80	CORPS DISTRIBUTION M80	VERTEILUNGSKTRPER	CUERPO DISTRIBUCIN M80 C
52	G66248125	GHIERA REGOLAZIONE M80	ADJUSTMENT KNURLED NUT M80	BAGUE REGLAGE M80	EINSTELLMUTTER M80	CONTRATUERCA REGULACIN M80 G
53	G66248126	SUPP.TRASMISSIONE M80	TRANSM.SUPPORT M80	SUPPORT ENTRAINEMENT M80	ANTRIEBSHALTERUNG M80	SOPORTE TRANSMISIN M80 S
54	G66248138	COPERCHIO SUPP.TRASM. M80	TRANSMISSION SUPP. COVER M80	COUVERCLE SUPPORT ENTRAINEM.	DECKEL ANTRIEBSHALTERUNGS M80	TAPA SOP. TRANSM. M80
55	G66248154	SCIVOLO DISTR. M80	CHUTE- DISTRIB. M80	ENTONNOIR DOSEUR MINIMAX MICRO	SAAPPARAT RUTSCHE M80	PLANO INCLINADO DISTR. M80

TAV. 175

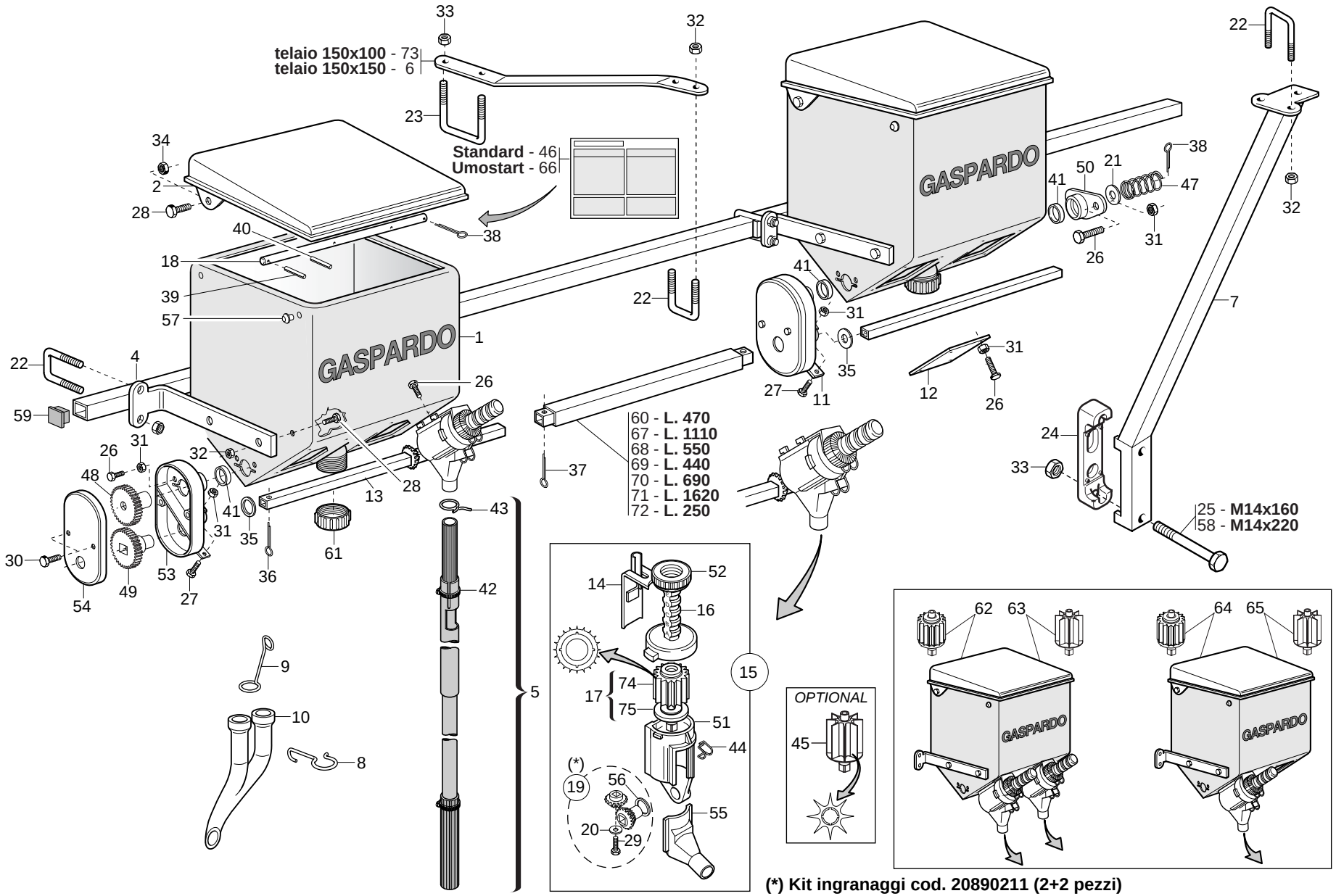

(*) Kit ingranaggi cod. 20890211 (2+2 pezzi)

MICROGRANULATORE

TAV. 175

Pos.	Cod.	Descrizione	Description	Description	Benennung	Descripcion
56	G20970100	RONDELLA 30X0,5X22 ACC.	WASHER 30X0-5X22 ACC.	RONDELLE 30X0-5X22 ACIER	UNTERLEGSCHEIBE 30X0-5X22 ACC.	ARANDELA 30X0-5X22 ACC.
57	G66248223	TAPPO SUPP.SPAND.D.11	PLUG MAN. SPR. SUPP. D.11	BOUCHON SUPPORT EP. ENGRAIS D.	HALTERUNGSPFROPFEN DsNGERSTR.	TAPN SOPORTE ABON.D.11 D
58	F01020236	VITE M14X 2X220 U5737 8.8 BR	SCREW M14X2X220 U5737 8.8 BR	VIS M14X2X220 U5737 8.8 BR	SCHRAUBE M14X2X220 U5737 8.8	TORNILLO M14X2X220 U5737 8.8
59	F20120346	PUNTALE Q 35 ALETT.POLIT.NERO				
60	G20890111	MANIC.UNIONE RINV.MICRO L.470	MICRO TRANSM.JOINT SLEEVE L.47	MANCHON RACCORD TRANSMISSION M	VERBINDUNGSMUFFE VORGELEGE MIK	MANGUITO EMPALME TRANSM. MICRO
61	G16675090	TAPPO PLASTICA MICRO C/OR				
62	G15476270	SERBATOIO MICRO 250 2 U.PLA	MICRO TANK 250 2 OUTPUTS	RESERVOIR MICRO 250 2 SORTIES	MIKROGRANULATBEHZLTER 250 2 AU	DEPSITO MICRO 250 2 SALIDAS B
63	G16675020	SERB.MICRO 250 2U PLA 8P.COMPL	MICRO TANK 250 2 OUTPUTS 8P. C	RESERV. MICRO 250 2 SORT. 8P.	MIKROGRANULATBEH. 250 2AUSG. 8	DEPSITO MICRO 250 2 SALIDAS 8P
64	G15476280	SERBATOIO MICRO PLA 1U COMPL	COMPL. MICRO TANK PLA 1U	RESERVOIR MICRO PLA 1U COMPL.	BEH-LTER MIKROGRANULAT PLASTIK	DEPOSITO MICRO PLA 1U COMPL.
65	G16675030	SERB.MICRO 250 1U PLA 8P.COMPL	MICRO TANK 250 1 OUTPUTS 8P. C	RESERV. MICRO 250 1 SORT. 8P.	MIKROGRANULATBEH. 250 1AUSG. 8	DEPSITO MICRO 250 1 SALIDAS 8P
66	G19702460	DECAL.TABELLA DISTRIB.UMOSTART	UMOSTART DISTRIBUTOR CHART STI	DECALC. TABLEAU DISTRIBUTEUR U	ABZIEHB. TABELLE SZAPPARAT UMO	CAL.TABLA DISTRIBUDOR UMOSTART
67	G20890112	MANICOTTO UNIONE MICRO L.1110	MICRO JOINT SLEEVE L.1110	MANCHON RACCORD MICRO L. 1110	VERBINDUNGSMUFFE MIKRO L1110	MANGUITO DE UNIN MICRO L.1110M
68	G20890130	MANICOTTO UNIONE MICRO L.550	MICRO JOINT SLEEVE	MANCHON RACCORD MICRO L. 550	VERBINDUNGSMUFFE MIKRO L 550	MANGUITO DE UNIN MICRO L.550 M
69	G20890201	MANICOTTO UNIONE MICRO L.440	MICRO JOINT SLEEVE L.440	MANCHON RACCORD MICRO L. 440	VERBINDUNGSMUFFE MIKRO L.440	MANGUITO DE UNIN MICRO L.440 M
70	G20890202	MANICOTTO UNIONE MICRO L.690	MICRO JOINT SLEEVE L.690	MANCHON RACCORD MICRO L. 690	VERBINDUNGSMUFFE MIKRO L.690	MANGUITO DE UNIN MICRO L.690 M
71	G20890203	MANICOTTO UNIONE MICRO L.1620	MICRO JOINT SLEEVE L.1620	MANCHON RACCORD MICRO L. 1620	VERBINDUNGSMUFFE MIKRO L.1620	MANGUITO DE UNIN MICRO L.1620M
72	G20890205	MANICOTTO UNIONE MICRO L.250	MICRO JOINT SLEEVE L.250	MANCHON RACCORD MICRO L. 250	VERBINDUNGSMUFFE MIKRO L.250	MANGUITO DE UNIN MICRO L.250 M
73	G16670241	TIRANTE BARRA MICRO SP				
74	G66248189	DOSATORE M80	SEED METERING DEVICE M80	DOSEUR M80	DOSIERER M80	DOSIFICADOR M80
75	G19001802	RONDELLA-ALBERO MICRO				

TAV. 182

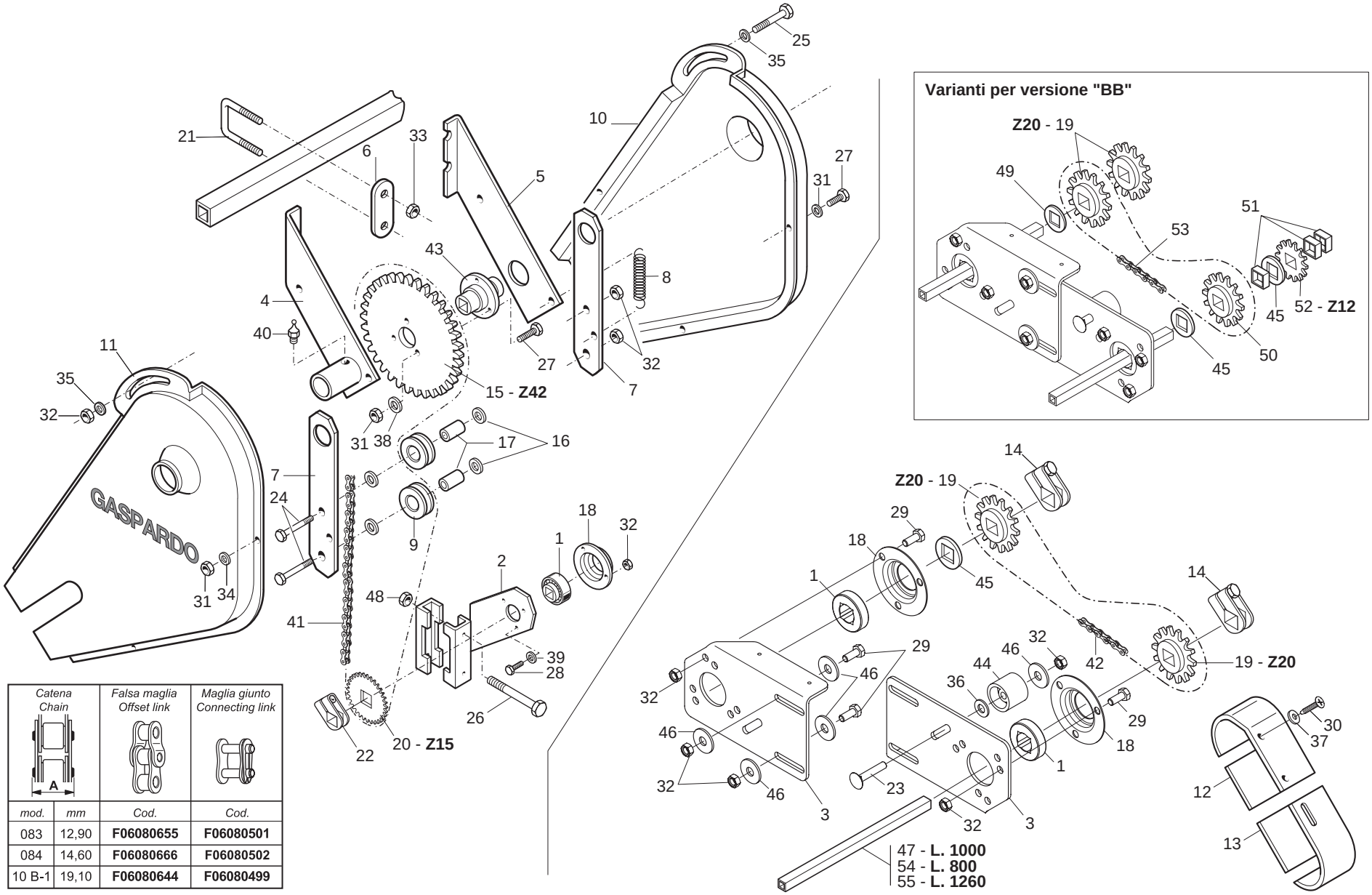

Catena Chain		Falsa maglia Offset link	Maglia giunto Connecting link
mod.	mm	Cod.	Cod.
083	12,90	**F06080655**	**F06080501**
084	14,60	**F06080666**	**F06080502**
10 B-1	19,10	**F06080644**	**F06080499**

TRASMISSIONE SPANDICONCIME E MICROGRANULATORE

TAV. 182

Pos.	Cod.	Descrizione	Description	Description	Benennung	Descripcion
1	G14830390	CUSCINETTO FORO QUADRO	SQUARE-HOLED BEARING	ROULEMENT AL+SAGE CARR+	VIERKANTLAGER	COJINETE ORIFICIO CUADRADO
2	G15470381	SUPPORTO RINVIO TUBO 150	TRANSM. SUPPORT FOR PIPE 150	SUPPORT RENVOI POUR TUBE 150	HALTERUNG VORGELEGE ROHR 150	SOPORTE TRANSMISION TUBO 150
3	G15470851	FIANCO SUPP.TRASM.SPANDI	SPREADER TRANSM. SIDE SUPPORT	COTE SUPPORT TRANSM. EPAND.	SEITEN HALTER. ANTRIEB DUNGERS	COSTADO SOPORTE TRANSM. ABONAD
4	G15475031	SUPPORTO TRASMISSIONE SX	LEFT TRANSMISSION SUPPORT	SUPPORT ENTRAINEMENT GCH	HALTERUNG GETRIEBE LI	SOPORTE TRANSMISIN IZQ S
5	G15475041	SUPPORTO TRASMISSIONE DX	RIGHT TRANSMISSION SUPPORT	SUPPORT ENTRAINEMENT DRT	HALTERUNG GETRIEBE RE	SOPORTE TRANSMISIN DER S
6	G15475260	SCONTRO SP	STRIKER PLATE SP	BUTEE SP	ANSCHLAG STREUER	ELEMENTO DE EMPALME SP
7	G15475310	SUPPORTO RULLINI TENDIC. MICRO	MICRO CHAIN STRETCHER ROLLERS	SUPP. ROUETS TEND. CHAINE MICR	HALTERUNG KETTENSPANNROLLEN	SOP. RODILLOS TENSOR CADENA MI
8	G18902960	MOLLA TRAZ.TRASM.RUOTA ZN	TRANSMISSION TENSIONER SPRING	RESSORT TRACT. ENTRAIN. ROUE Z	ZUGFEDER RADANTRIEB ZN	MUELLE TRAC. TRANSM.RUEDA ZN
9	G19000091	ROCCHETTO 2 META'	CHAIN TENSIONER	TENDEUR DE CHAINE 2 MOITIE	KLEINRAD SPANNER SA	CARRETE TENSOR SA
10	G19002810	CARTER RINVIO MICRO DX	RIGHT MICRO TRANSM. CASE	CARTER TRANSM. MICRO DRT	VORGELEGEGEHZUSE MIKRO RE	CæRTER TRANSMISIN MICRO DER C
11	G19002820	CARTER RINVIO MICRO SX	LEFT MICRO TRANSM. CASE	CARTER TRANSM. MICRO GCH	VORGELEGEGEHZUSE MIKRO LI	CæRTER TRANSMISIN MICRO IZQ C
12	G19002830	CARTER TRASMISSIONE SUPERIORE	TOP TRANSMISSION CASE	CARTER ENTRAINEMENT SUPERIEUR	OBERES ANTRIEBSGEHZUSE	CæRTER TRANSMISIN SUPERIOR C
13	G19002880	CARTER INFERIORE TRASM.SPAND.	BOTTOM SPREADER TRANSM. CASE	CARTER INFERIEUR TRANSM EPAND.	UNTER. ANTRIEBSGEHZUSE DsNG.GE	CæRTER INFER. TRANSMISIN ABONC
14	G22505085	FERMO ASSE IN LAMIERA	PLATE AXLE STOP	ARRET AXE EN TOLE	FESTSTELLVORRICHTUNG BLECHACHS	BLOQUEO EJE DE CHAPA
15	G20890128	CORONA Z-42 SP	RING GEAR Z-42 SP	COURONNE Z-42 SP	KRANZ Z-42 SP	CORONA Z-42 SP
16	G20970032	RONDELLA 32X4X8,5	WASHER 32X4X8-5	RONDELLE 32X4X8-5	UNTERLEGSCHEIBE 32X4X8-5	ARANDELA 32X4X8-5
17	G20980086	BOCCOLA DIST.D.8,5X16X31	BUSHING SPAC.. D.8-5X16X31	BOITE ENTRETOISE D. 8-5X16X31	VERTEILERBsCHSE D.8-5X16X31	CASQUILLO DIST. D.8-5X16X31
18	G22230094	SUPPORTO CUSCINETTO	BEARING SUPPORT	SUPPORT PALIER	LAGERBsCHSE	SOPORTE COJINETE
19	G22250007	INGR.CON MOZZO 1/2 Z-20 SV	GEARS- W/ HUB 1/2 Z-20 SV	ENGRENAGE 1/2 Z-20	ZAHNRAD MIT NABE 1/2 Z-20 SV	ENGRAN.CON PERNO 1/2 Z-20 SV
20	G22250028	PIGNONE Z-15 SV	Z-15 PINION SV	PIGNON Z-15 SV	RITZEL Z-15 SV	PI¾N Z-15 SV P
21	F20110706	CAV.Q.M10X 1,5X 30 47X 60 ZN	DISK SUPPORT.ELEMENT U BOLT SV	CAVALIER SUPPORT DISQUE SV	VERBINDUNG SCHEIBENHALTERUNG S	PERNO EN U SOP. DISCO SV
22	G22505085	FERMO ASSE IN LAMIERA	PLATE AXLE STOP	ARRET AXE EN TOLE	FESTSTELLVORRICHTUNG BLECHACHS	BLOQUEO EJE DE CHAPA
23	F01060047	BUL.M 8X1,25X 45 U5732 4.6 ZN	BOLT 8X45 5732 4.6 GALVANIZED	VIS 8X45 5732 4.6 ZN	SCHRAUBE 8X45 5732 4.6 ZN	TORNILLO 8X45 5732 4.6 ZN
24	F01020075	VITE M8X1,25X 55 U5737 8.8 ZN	BOLT 8 X55 5737 8.8 GALVANIZED	VIS 8 X55 5737 8.8 ZN	SCHRAUBE 8 X55 5737 8.8 ZN	TORNILLO 8 X55 5737 8.8 ZN
25	F01020083	VITE M 8X1,25X70 U5737 8.8 ZN	BOLT M 8X70	VIS M 8X70	SCHRAUBE M 8X70	TORNILLO M 8X70
26	F01020236	VITE M14X 2X220 U5737 8.8 BR	SCREW M14X2X220 U5737 8.8 BR	VIS M14X2X220 U5737 8.8 BR	SCHRAUBE M14X2X220 U5737 8.8	TORNILLO M14X2X220 U5737 8.8
27	F01020403	VITE M 6X 1X 16 U5739 8.8 ZN	BOLT M 6X16	VIS M 6X16	SCHRAUBE M 6X16	TORNILLO M 6X16
28	F01020432	VITE M 8X1,25X16 U5739 8.8 ZN	BOLT M 8X16	VIS M 8X16	SCHRAUBE M 8X16	TORNILLO M 8X16
29	F01020436	VITE M 8X1,25X 20 U5739 8.8 ZN	BOLT M 8X20	VIS M 8X20	SCHRAUBE M 8X20	TORNILLO M 8X20
30	F01070074	VIT.A.4,2X1,41X 25 6954 4.8NI	BOLT 4-2X25 DIN 7981	VIS 4-2X25 DIN 7981	SCHRAUBE 4-2X25 DIN 7981	TORNILLO 4-2X25 DIN 7981
31	F01200232	DADO M 6X 1 U5588 6.8 ZN				
32	F01200244	DADO M 8X1,25 U5588 6.8 ZN	NUT M8	ECROU M8	MUTTER M8	DADO M8
33	F01200270	DADO M10X 1,5 U5588 6.8 ZN	NUT M10	ECROU M10	MUTTER M10	DADO M10
34	F01410037	ROS.M6 6,4X12,5X1,6 U6592 ZN	PLANE WASHER D.6	RONDELLE D.6	SCHEIBE D.6	ARANDELA D.6
35	F01410051	ROS.M8 8,4X 17X1,6 U6592 ZN	PLANE WASHER D.8	RONDELLE D.8	SCHEIBE D.8	ARANDELA D.8
36	F01410064	ROS.M10 10,5X 20X 2 U6592 ZN	WASHER 10,5X21	RONDELLE 10,5X21	SCHEIBE 10,5X21	ARANDELA 10,5X21
37	F01420011	ROS.M4 4,3X 16X 1 U6593 ZN	FLAT WASHER 4-3X 16X1-5 6593 G	ROND.PLATE 4-3X 16X1-5 6593 ZN	SCHEIBE 4-3X 16X1-5 6593 ZN	ARAND. PLANA 4-3X 16X1-5 6593
38	F01430047	ROS.M6 6,4X 11X0,7 U8842J ZN	WASHER D6 DIN 6798 D.INT.GALV.	RONDELLE D6 DIN 6798 D. INT. Z	UNT. SCHEIBE D6 DIN 6798 D. IN	ARANDELA D6 DIN 6798 D.INT.ZN
39	F01430059	ROS.M8 8,4X 15X0,8 U8842J ZN	WASHER D8 DIN 6798 D.INT.ZN	RONDELLE D8 DIN 6798 D. INT. Z	UNT. SCHEIBE D8 DIN 6798 D. IN	ARANDELA D8 DIN 6798 D.INT.ZN
40	F01100011	ING.M 6X1 7663-A 9SMNPB28 ZN	SPHERE NIPPLE M6X1/A	GRAISSEUR A BILLES M6X1/A	KUGELFETTBsCHSE M6X1/A	ENGRAS. DE ESFERAS M6X1/A
41	F06080057	CATENA 1/2 ISO 083 107 MAGLIE	CHAIN ISO 083 107 LINKS	CHAINE ISO 083 107 MAILLES	KETTE ISO 083 107 GLIEDER	CADENA ISO 083 107 ESLABNE L
42	F06080025	CATENA 1/2 ISO 083 56 MAGLIE	CHAIN 1/2-3/16 56 LINKS.	CHAINE 1/2-3/16 56 MAILLES	KETTE 1/2-3/16 56 GLIEDER	CADENA 1/2-3/16 56 ESLABNE
43	G66248152	MOZZO TRASM.MICRO M80	HUB - TRANSM. MICRO M80	MOYEU ENTRAINEMENT MICRO M80	ANTRIEBSNABE MIKRO M80	CUBO TRANSM. MICRO M80
44	G66248207	TENDICATENA SPAND. SP-520	CHAIN TENSIONER	TENDEUR DE CHAINE EPAND. ENGR.	KETTENSPANNER DsNGERSTR. SP-52	TENSOR DE CADENA ABON. SP-520
45	G66248218	RONDELLA DISTAN.SPAND.	MAN. SPR. SPACER WASHER	RONDELLE ENTRETOISE EP. ENGRAI	ABSTANDSCHEIBE DsNGERSTREUER	ARANDELA DISTAN.ABONAD.
46	F01420048	ROS.M8 8,4X 24X 2 U6593 ZN	PLANE WASHER D.8	RONDELLE D.8	SCHEIBE D.8	ARANDELA D.8
47	G22230138	ASSE CAMBIO 4F.80-6F.45 L.1000	GEAR SPINDLE 4-ROW 80- 6-ROW.4	AXE BOITE DE VITESSE 4 RA	GETRIEBEACHSE 4 R. 80-6 R.45 L	EJE CAMBIO 4 FILAS. 80-6 FILAS
48	F01200306	DADO M14X 2 U5588 6.8 ZN	NUT M14X2	ECROU M14X2	MUTTER M14X2	DADO M14X2
49	G18701620	RONDELLA 16,5 X35 X3 QU.ZN	WASHER 16.5 X 35 X 3- GALVAN.	RONDELLE 16-5 X35 X3 QU.ZN	UNTERLEGSCHEIBE 16-5 X35 X3 Q	ARANDELA 16-5 X35 X3 QU.ZN
50	G22250044	CORONA CAMBIO Z-17 SV	GEARBOX RING GEAR Z-17 SV	COURONNE BOITE DE VITESSE	GETRIEBEKRANZ Z-17 SV	CORONA CAMBIO Z-17 SV
51	G15231410	DISTANZIALE INTERNO ZN	INNER SPACER	ENTRETOISE INT.	INNERES DISTANZST_CK	DISTANCIADOR INTERIOR
52	G20860086	INGRANAGGIO 1/2 Z-12 F.Q.	GEAR 1/2 Z-12 F.Q.	ENGRENAGE 1/2 Z-12 TROUS CARRE	ZAHNRAD 1/2 Z-12 F.Q.	ENGRANAJE 1/2 Z-12 F.Q.
53	F06080197	CATENA 1/2 ISO 083 58 MAGLIE	CHAIN 1/2 ISO 083 58 LINKS	CHAINE 1/2 ISO 083 58 MAILLES	KETTE 1/2 ISO 083 58 GLIEDER	CADENA 1/2 ISO 083 58 ESLABNEL
54	G22230142	ASSE 4 FILE L.800	4-ROW SPINDLE L.800	AXE 4 RANGEES L. 800	ACHSE 4 REIHEN B. 800	EJE 4 FILAS L.800
55	G22270049	ASSE 4F.85-6F.50 L.1260	4-ROW SPINDLE - 85-6-ROW-50 L.	AXE 4 RANGEES 85-6 RANGEES 50	ACHSE 4 REIHEN 85-6 REIH. 50	EJE 4 FILAS. 85-6 FILAS. 50 L.

TAV. 331

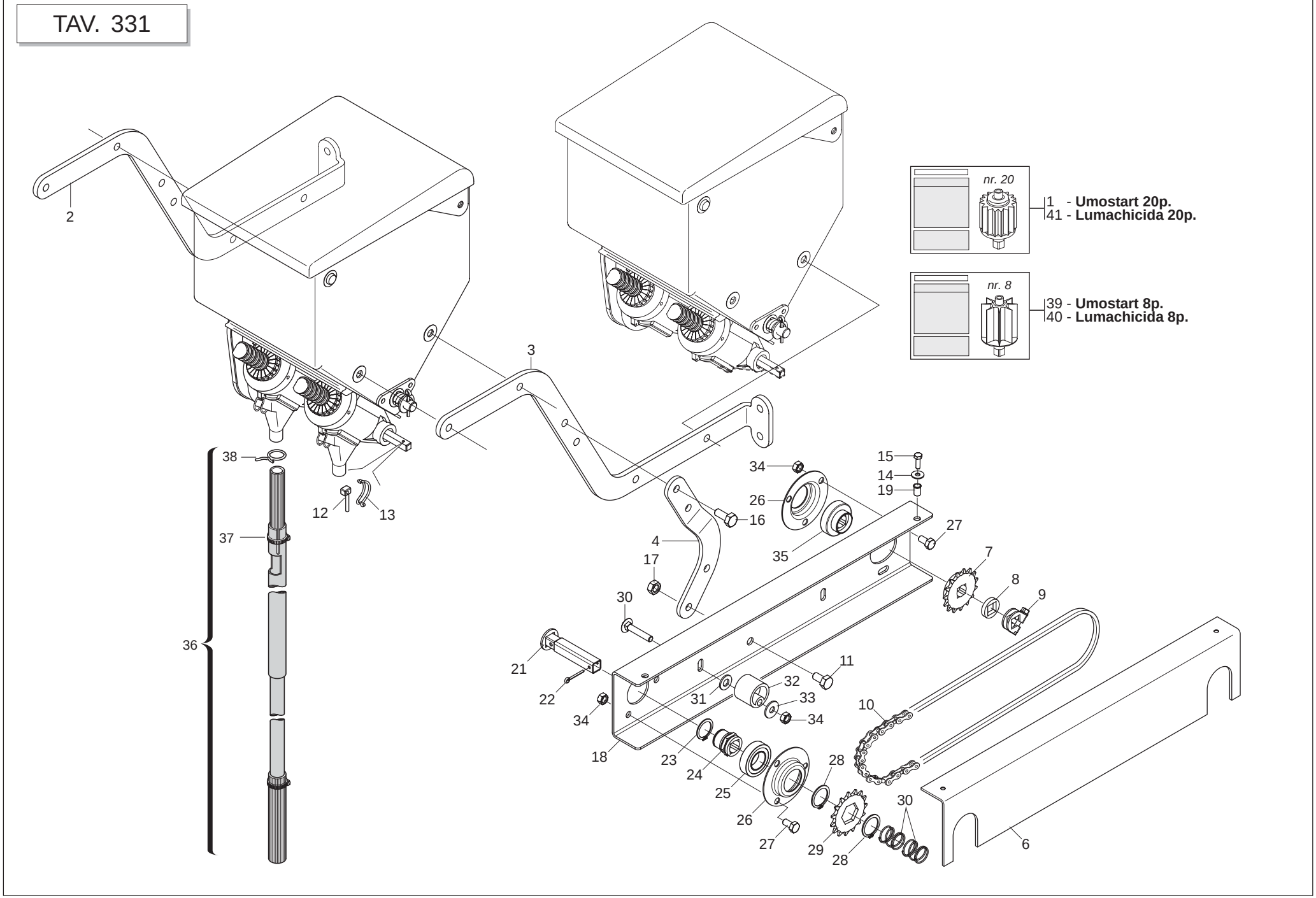

GASPARDO

APPLICAZIONE DOPPIO MICROGRANULATORE

TAV. 331

Pos.	Cod.	Descrizione	Description	Description	Benennung	Descripcion
1	G19704980	DECAL.TAB.DISTRIB.UMOSTART 20P	UMOSTART DISTRIBUTOR CHART 20P	TABLEAU DISTRIBUTEUR UMOSTART	TABELLE SZAPPARAT UMOSTART 20P	TABLA DISTRIBUDOR UMOSTART 20P
2	G15274600	SUPPORTO SX LUMACHICIDA	LEFT SUPPORT	SUPPORT GCH	HALTERUNG LI	SOPORTE IZQ
3	G15274610	SUPPORTO DX LUMACHICIDA	RIGHT SUPPORT	SUPPORT DRT	HALTERUNG RE	SOPORTE DER
4	G15274621	ATTACCO SUPPORTO CATENA	CHAIN SUPPORT COUPLING	FIXATION SUPPORT CHAINE	KUPPLUNG HALTERUNG	CONEXIN SOPORTE CADENA
5	G15273061	TRASMISSIONE LUMACHICIDA COMPL	COMPL. TRANSMISSION	TRANSMISSION COMPL.	ANTRIEB KOMPL.	TRANSMISION COMPL
6	G15273051	CARTER SUPPORTO CATENA	SUPPORT CHAIN CASING	CARTER SUPPORT CHAiNE	KETTENHALTERUNGSGEHZUSE	CARTER SOPORTE CADENA
7	G22250028	PIGNONE Z-15 SV	Z-15 PINION SV	PIGNON Z-15 SV	RITZEL Z-15 SV	PI¾N Z-15 SV P
8	G66248218	RONDELLA DISTAN.SPAND.	MAN. SPR. SPACER WASHER	RONDELLE ENTRETOISE EP. ENGRAI	ABSTANDSCHEIBE DsNGERSTREUER	ARANDELA DISTAN.ABONAD.
9	G22505085	FERMO ASSE IN LAMIERA	PLATE AXLE STOP	ARRET AXE EN TOLE	FESTSTELLVORRICHTUNG BLECHACHS	BLOQUEO EJE DE CHAPA
10	F06080047	CATENA 1/2 ISO 083 88 MAGLIE	CUT-DOWN CHAIN 1/2 ISO 083 88	TR. CH. ® ISO 083 88 MAILLES	KETTENLZNGE 1/2 ISO 083 88 GL	CADENA 1/2 ISO 083 88 ESLABONE
11	F01020470	VITE M10X 1,5X20 U5739 8.8 ZN	BOLT M 10X20	VIS M 10X20	SCHRAUBE M 10X20	TORNILLO M 10X20
12	F02200452	SPINA SCATTO D.4,4 B/80 ZN	SNAP PIN D.4-4 B/80	FICHE A DETENTE D. 4-4 B/80	EINRASTSTIFT D 4-4 B/80	CLAVIJA DE MUELLE D.4-4 B/80
13	G65336084	MOLLA SPEC.ZN AGITAT.DISTR.SV	SPEC SPRINGZN DISTR. STIRRER .	RESSORT SPEC. ZN AGITATEUR DIS	SPEZIALFEDER ZN SAMENMISCHER S	MUELLE ESPEC. ZN AGITAD. DISTR
14	F01410037	ROS.M6 6,4X12,5X1,6 U6592 ZN	PLANE WASHER D.6	RONDELLE D.6	SCHEIBE D.6	ARANDELA D.6
15	F01020403	VITE M 6X 1X 16 U5739 8.8 ZN	BOLT M 6X16	VIS M 6X16	SCHRAUBE M 6X16	TORNILLO M 6X16
16	F01020472	VITE M10X 1,5X25 U5739 8.8 ZN	BOLT 10X25 5739 8.G GALVANIZED	VIS 10X25 5739 8.G ZN	SCHRAUBE 10X25 5739 8.G ZN	TORNILLO 10X25 5739 8.G ZN
17	F01200270	DADO M10X 1,5 U5588 6.8 ZN	NUT M10	ECROU M10	MUTTER M10	DADO M10
18	G15273041	SUPPORTO CATENA	CHAIN SUPPORT	SUPPORT CHAINE	KETTE HALTERUNG	SOPORTE CADENA
19	F02250680	INSERTO FIL.M 6X13 ZN T.RIDOTT	THREADED INSERT M6X13 ZN	PIECE INTERC.FILETEE M 6X13ZN	GEWINDEEINSATZ M 6 X 13 ZN	ENCASTRE ROSCADO M 6 X13 ZN
20	F01060047	BUL.M 8X1,25X 45 U5732 4.6 ZN	BOLT 8X45 5732 4.6 GALVANIZED	VIS 8X45 5732 4.6 ZN	SCHRAUBE 8X45 5732 4.6 ZN	TORNILLO 8X45 5732 4.6 ZN
21	G15274640	MANICOTTO DISGIUNTORE	UNCOUPLING SLEEVE	MANCHON DEBRAYAGE	MUFFE AUSKUPPLUNG	MANGUITO DESCONEXIËN
22	F02200163	COPIGLIA 3X 25 U1336 ZN				
23	F02050101	ANELLO E. DE 25X 1,2 U7435 C70	SEEGER RING E. 25X1,2 7435 C70	SEEGER E. 25X 1,2 U7435 C70	SEEGERING E. 25X 1,2 U7435 C70	ANILLO E. 25X 1,2 U7435 C70
24	G22250441	MOZZO CORONA SEMINATORE SV/2	PLANTING UNIT CROWN HUB SV/2	MOYEU COURONNE SEMEUR SV/2	KRANZNABE SZELEMENT SV/2	CUBO CORONA SEMBRADOR SV/2
25	F04010134	CUSC.D25 D47 B12 6005 2Z	BEARING 6005 2Z	PALIER 6005 2Z	LAGER 6005 2Z	COJINETE 6005 2Z
26	G22230094	SUPPORTO CUSCINETTO	BEARING SUPPORT	SUPPORT PALIER	LAGERBsCHSE	SOPORTE COJINETE
27	F01020432	VITE M 8X1,25X16 U5739 8.8 ZN	BOLT M 8X16	VIS M 8X16	SCHRAUBE M 8X16	TORNILLO M 8X16
28	F02050615	ANELLO E. DE 28X 1,5 U7435 C70	STOP RING 28 UNI 7435-75	BAGUE DE SERRAGE 28 UNI 7435-7	DRAHTSPRENGRING 28 UNI 7435-75	ANILLO PARADA 28 UNI 7435-75
29	G22250190	CORONA ASSE SEMINAT.Z-15 SV	PLANTING UNIT AXLE Z-15 RING G	COURONNE AXE SEMEUR Z-15 SV	KRANZ SZELEMENTACHSE Z-15 SV	CORONA EJE SEMBR. Z-15 SV
30	G65338022	MOLLA COMP.ZN CHIAVISTELLO FR	ZN LATCH COMP. SPRING FR	RESSORT COMPL. ZN VERROU FR	DRUCKFEDER ZN RIEGEL FR	MUELLE COMP.ZN PESTILLO FR
31	F01410064	ROS.M10 10,5X 20X 2 U6592 ZN	WASHER 10,5X21	RONDELLE 10,5X21	SCHEIBE 10,5X21	ARANDELA 10,5X21
32	G66248207	TENDICATENA SPAND. SP-520	CHAIN TENSIONER	TENDEUR DE CHAINE EPAND. ENGR.	KETTENSPANNER DsNGERSTR. SP-52	TENSOR DE CADENA ABON. SP-520
33	F01420048	ROS.M8 8,4X 24X 2 U6593 ZN	PLANE WASHER D.8	RONDELLE D.8	SCHEIBE D.8	ARANDELA D.8
34	F01200244	DADO M 8X1,25 U5588 6.8 ZN	NUT M8	ECROU M8	MUTTER M8	DADO M8
35	G14830390	CUSCINETTO FORO QUADRO	SQUARE-HOLED BEARING	ROULEMENT AL+SAGE CARR+	VIERKANTLAGER	COJINETE ORIFICIO CUADRADO
36	G11425111	TUBO DISCESA LUMACHICIDA COMPL	PIPE DESCENT	TUBE DESCENTE COMPL.	SENKROHR KOMPL.	TUBO DESCENSO COMPL.
37	F02300016	FASCETTA STRING. 16/27 H.8				
38	G65336041	MOLLA SPEC.ZN STRINGITUBO M80	SPEC.SPRING ZN . PIPE CLAMP M8	RESSORT SPEC. ZN SERRE-TUBE M8	SPEZIALFEDER ZN ROHRSCHELLE M8	MUELLE ESPEC. ZN APLASTA TUBOS
39	G19704970	DECAL.TAB.DISTRIB.UMOSTART 8P.	UMOSTART DISTRIBUTOR CHART 8P	TABLEAU DISTRIBUTEUR UMOSTART	TABELLE SZAPPARAT UMOSTART 8P	TABLA DISTRIBUDOR UMOSTART 8P
40	G19704990	DECAL.TAB.DISTRIB.LUMACHIC.8P.	DISTRIBUTOR CHART 8P	TABLEAU DISTRIBUTEUR 8P	TABELLE SZAPPARAT 8P	TABLA DISTRIBUDOR 8P
41	G19705000	DECAL.TAB.DISTRIB.LUMACHIC.20P	DISTRIBUTOR CHART 20P	TABLEAU DISTRIBUTEUR 20P	TABELLE SZAPPARAT 20P	TABLA DISTRIBUDOR 20P

TAV. 212

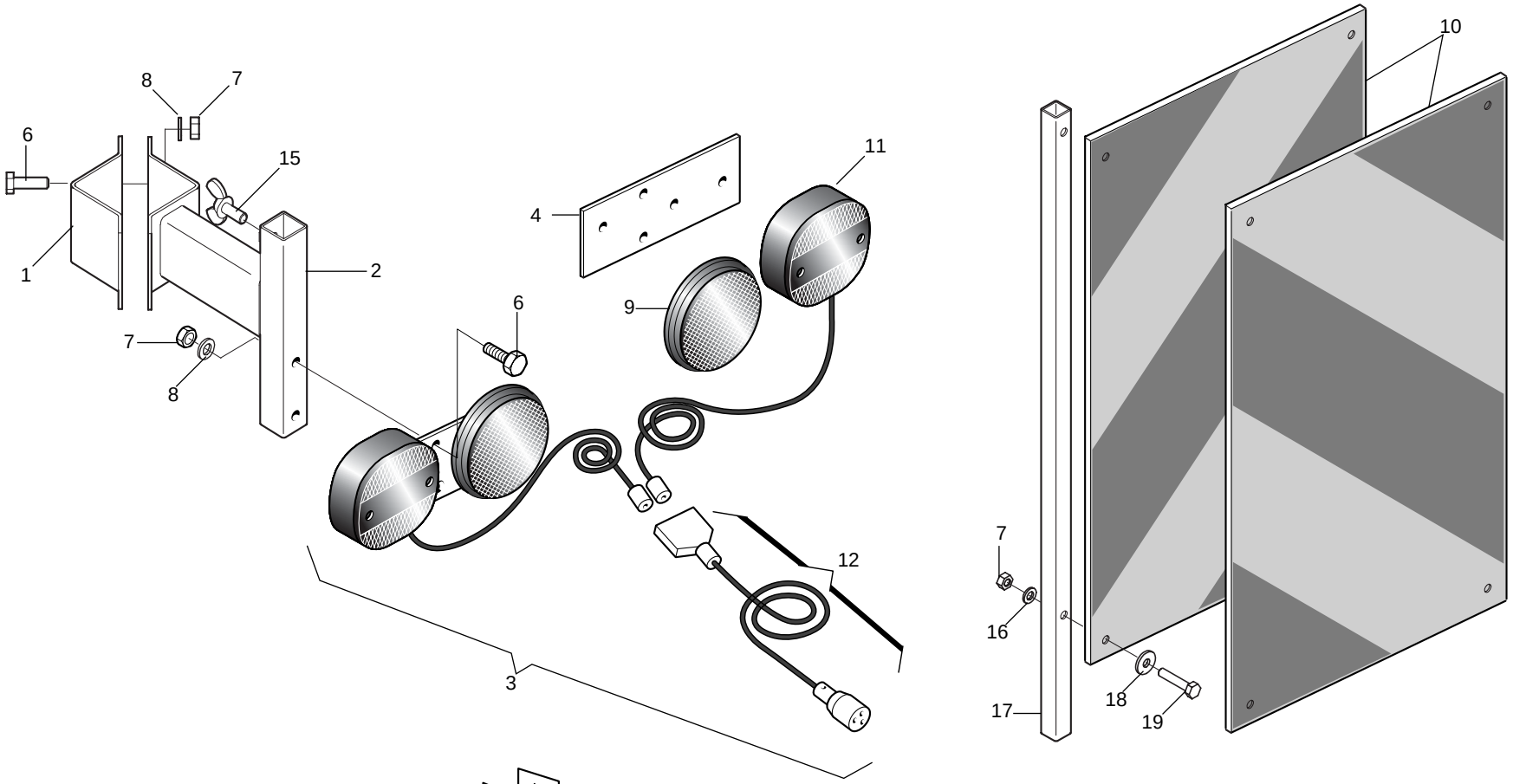

5
Rosso Gaspardo - 1Kg
Gaspardo red - 1Kg
Rot Gaspardo - 1Kg
Rouge Gaspardo - 1Kg
Rojo Gaspardo - 1Kg

13
DECALCOMANIE AVVERTIMENTO
DECAL
DBZIEHBILD
DECALCOMANIE
CALCOMANIE
CALCOMANIE

14

ACCESSORI

TAV. 212

Pos.	Cod.	Descrizione	Description	Description	Benennung	Descripcion
1	G15411260	FORCELLA LUCI ZN	OPENING FORK ZN	FOURCHE FEUX ZN	LICHTERGABEL ZN	HORQUILLA LUCES ZN
2	G15412640	SUPPORTO KIT LUCI POST.	REAR LIGHT SUPPORT KIT	SUPPORT KIT FEUX ARRI+RE	HALTERUNG KIT HINT. LICHTER	SOPORTE KIT LUCES POST.
3	G13616620	KIT LUCI PER MACCHINE PORTATE	LIGHT KIT FOR MOUNTED MACHINE	KIT FEUX POUR MACHINES PORT+ES	KIT LICHTER F_R FÍRDERMASCHINE	KIT LUCES PARA M-QUINAS SUSPEN
4	G13616570	PIASTRA SUPP.LUCI	LIGHTS SUPPORT PLATE	PLAQUE DE SUPPORT ECLAIRAGE	LICHTERHALTERUNGSPLATTE	PLACA SOPORTE LUCES
5	F03200251	ROSSO GASPARDO RAL3020 BICOMP.				
6	F01020403	VITE M 6X 1X 16 U5739 8.8 ZN	BOLT M 6X16	VIS M 6X16	SCHRAUBE M 6X16	TORNILLO M 6X16
7	F01220011	DADO M 6X 1 D980 8 ZN	SELF LOCKING NUT M6	ECROU AUTOBL. M6	SELBSTSPERR.MUTTER M6	DADO AUTOBL. M6
8	F01430047	ROS.M6 6,4X 11X0,7 U8842J ZN	WASHER D6 DIN 6798 D.INT.GALV.	RONDELLE D6 DIN 6798 D. INT. Z	UNT. SCHEIBE D6 DIN 6798 D. IN	ARANDELA D6 DIN 6798 D.INT.ZN
9	F05010221	CATARIFRANGENTE TONDO D.80 >	D.80 ROUND REFLECTOR	CATADIOPTRE ROND D.80	RUNDER R_CKSTRAHLER D.80	PAPEL REFRACTARIO REDONDO D.80
10	F05010357	N.2 PANNELLI CARICHI SPORGENTI	N[JUTTING LOAD PANELS	N. 2 PANNEAUX CHARGES SAILLANT	N.2 TAFELN VORSPRINGENDE LADUN	2 PANELES CARGADOS SALIENTES
11	F05010076	FANALE X KIT LUCI	LAMP KIT LIGHTS COMPL.	FEU KIT ECLAIRAGE COMPL.	LAMPEN KIT LICHT KOMPL.	FAROL SET LUCES COMPL.
12	F05010080	CABLAGGIO PER KIT LUCI	LIGHT WIRING HARNESS	CABLAGE KIT PHARES	VERKABELUNG LAMPENKIT	CABLEADO JUEGO LUCES
13	G89900500	KIT DECALCOMANIE -CE-	DECAL KIT -CE-	KIT DECALCOMANIE -CE- K	IT ABZIEHB. -CE- S	ET CALCOMANAS -CE-
14	G89900510	KIT DECALCOM.ST250-300-MTE	DECAL KIT ST250-300-MTE	KIT DECALCOM.ST250-300-MTE	KIT ABZIEHB. ST250-300-MTE	SET CALCOM.ST250-300-MTE
15	F01090215	VITE M 8X1,25X15 U5449 5.8 ZN	BOLT 8X15 UNI 5449 5.8 GALVANI	VIS 8X15 UNI 5449 5.8 ZN	SCHRAUBE 8X15 UNI 5449 5.8 ZN	TORNILLO 8X15 UNI 5449 5.8 ZN
16	F01410037	ROS.M6 6,4X12,5X1,6 U6592 ZN	PLANE WASHER D.6	RONDELLE D.6	SCHEIBE D.6	ARANDELA D.6
17	G15412650	TUBO Q. 16X1,5X 643 ZN	GALVAN. SQUARE 16X1,5X643	TUBE CARRE 16X1,5X643 ZN	ROHR Q. 16X1,5X643 ZN	TUBO CUADRADO 16X1,5X643 ZN
18	F01420036	ROS.M6 6,4X 18X 2 U6593 ZN	FLAT WASHER 6-6X 18X2 6593 ZN	ROND. PLATE 6-6X 18X2 6593 ZN	SCHEIBE 6-6X 18X2 6593 ZN	ARAND. PLANA 6-6X 18X2 6593 ZN
19	F01020408	VITE M 6X 1X 30 U5739 8.8 ZN	BOLT M 6X1X30	VIS M 6X1X30	SCHRAUBE M 6X1X30	TORNILLO M 6X1X30

TAV. 340

Codice - Code	Descrizione - Description	Lunghezze Lengths min.	Lunghezze Lengths max.	Classe - Size (A x B)	Tipo - Type (*)		Forcelle - Yokes (**) Z6 (1"3/8)	Z6 (1"3/4)	Z8 (32x38)	Z20 (1"3/4)	Z21 (1"3/8)
F08011711	CARD.B1 Z6-Z6 L700	700	1100	B1 (22 x 54)	A	A	G58161015	F08011772	F08011742	F08011758	F08011767
F08011712	CARD.B3 Z6-Z6 L1300	1300	2000	B3 (27 x 70)	A	A	———	G58161016	F08011743	———	———
F08011713	CARD.B1 Z8-Z6 L700	700	1100	B1 (22 x 54)	A	A	G58161015	F08011772	F08011742	F08011758	F08011767
F08011714	CARD.B1 Z20-Z6 L700	700	1100	B1 (22 x 54)	A	A	G58161015	F08011772	F08011742	F08011758	F08011767
F08011715	CARD.B1 Z8-Z6 L900 R.LIB	900	1400	B1 (22 x 54)	A	B	G58161015	F08011772	F08011742	F08011758	F08011767
F08011716	CARD.B1 Z6-Z6 L900 R.LIB	900	1400	B1 (22 x 54)	A	B	G58161015	F08011772	F08011742	F08011758	F08011767
F08011719	CARD.B2 Z6-Z6 L900	900	1400	B2 (23,8 x 61,3)	A	B	———	———	———	———	———
F08011720	CARD.B3 Z8-Z6 L1300	1300	2000	B3 (27 x 70)	A	A	———	G58161016	F08011743	———	———
F08011757	CARD.B1 Z20-Z6 L900 R.L	900	1400	B1 (22 x 54)	A	B	G58161015	F08011772	F08011742	F08011758	F08011767
F08011764	CARD.R4 Z20-Z6 L1210 OM-RL	1210		R4 (27 x 74,6)	A	C	F08011768	———	F08011766	F08011774	F08011773

(*)

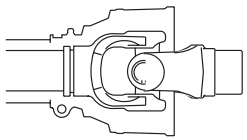

GIUNTO STANDARD
STANDARD JOINT

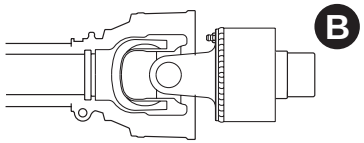

RUOTA LIBERA
OVERRUNNING CLUTCH

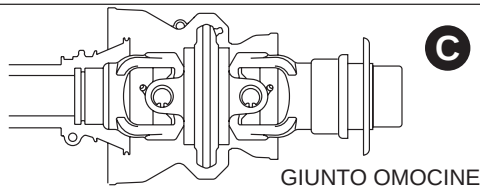

GIUNTO OMOCINETICO
CONSTANT VELOCITY JOINT

(**)

Z6 (1"3/8)

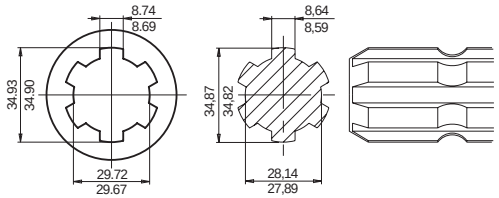

Z6 (1"3/4)

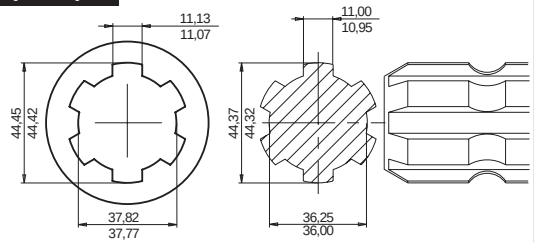

Z8 (32x38)

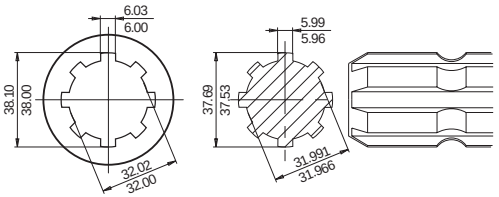

Z20 (1"3/4)

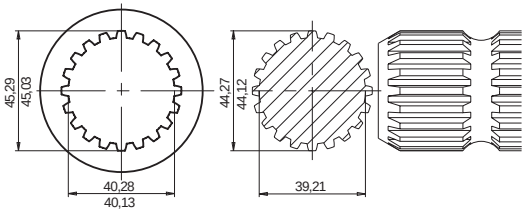

Z21 (1"3/8)

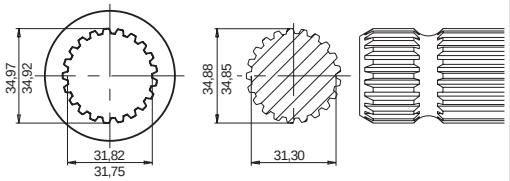

GASPARDO

CARDANI

TAV. 340

Pos.	Cod.	Descrizione	Description	Description	Benennung	Descripcion
	F08011711	CARD.B1 Z6-Z6 L700	UNIVERSAL JOINT S10 0700F 112	CARD NORM S10 0700F1121121CAT	KARDAN S10 0700F 112 112 1CAT	CARDæN S10 0700F 112 112 1CAT
	F08011712	CARD.B3 Z6-Z6 L1300	UNIVERSAL JOINT T40 1020F 112	CARD. T40 1020F 112 112 1 CAT	KARDAN T40 1020F 112 112 1CAT	CARDæN T40 1020F 112 112 1CAT
	F08011713	CARD.B1 Z8-Z6 L700	UNIV.JOINT B1070BA32A60 Z-8 Z-	CARD. B1070BA32A60 Z-8 Z-6	KARDAN B1070BA32A60 Z-8 Z-6	CARD+N B1070BA32A60 Z-8 Z-6
	F08011714	CARD.B1 Z20-Z6 L700				
	F08011715	CARD.B1 Z8-Z6 L900 R.LIB				
	F08011716	CARD.B1 Z6-Z6 L900 R.LIB	UNIV.JOINT CE T100710 112 R12	CARD ROUE LIBRE T100710 112R12	KARDAN CE T100710 112 R12	CARDAN CE T100710 112 R12
	F08011719	CARD.B2 Z6-Z6 L900	UNIVERSAL JOINT 102 071 N T07	CARD. 102 071 N T07 T07 1 CAT	KARDAN 102 071 N T07 T07 1CAT	CARDæN 102 071 N T07 T07 1CAT
	F08011720	CARD.B3 Z8-Z6 L1300				
	F08011742	FORCELLA CARD.32X38 Z8 B1	CARDAN SHAFT FORK Z.8	FOURCHETTE CARDAN Z.8	GABEL KARDAN Z.8	HORQUILLA CARDæN Z.8
	F08011743	FORCELLA CARD.32X38 Z8 B3				
	F08011757	CARD.B1 Z20-Z6 L900 R.L >				
	F08011758	FORCELLA CARD.1"3/4 Z20 B1 >				
	F08011764	CARDANO OM 3/4Z20-RL Z6 L1210				
	F08011766	FORCELLA CARD.32X38 Z8 R4				
	F08011767	FORCELLA CARD.1 3/8 Z21 B1 >				
	F08011768	FORCELLA CARD.1 3/8 Z6 R4				
	F08011772	FORCELLA CARD.1"3/4 Z6 B1 >				
	F08011773	FORCELLA CARD.1 3/8 Z21 R4 >				
	F08011774	FORCELLA CARD.1 3/4 Z20 R4				
	G58161015	FORCELLA CARD.1'3/8 Z6 B1				
	G58161016	FORCELLA CARD.1'3/8 Z6 B3 >				

USATE SEMPRE RICAMBI ORIGINALI
ALWAYS USE ORIGINAL SPARE PARTS
IMMER DIE ORIGINAL-ERSATZTEILE VERWENDEN
*EMPLOYEZ TOUJOURS LES PIECES DE RECHANGE ORI*GINALES
UTILIZAR SIEMPRE REPUESTOS ORIGINALES

GASPARDO

Servizio Assistenza Tecnica - After Sales Service
Servizio Ricambi - Spare Parts Service
+39 0434 695410

Agip

DEALER:

G19530197

G19530197

MASCHIO GASPARDO

MASCHIO GASPARDO SpA
Sede legale e stabilimento produttivo
Via Marcello, 73 - 35011 Campodarsego (Padova) - Italy
Tel. +39 049 9289810
Fax +39 049 9289900
Email: info@maschio.com
www.maschionet.com

MASCHIO DEUTSCHLAND GMBH
Äußere Nürmberger Straße 5
D - 91177 Thalmässing
Deutschland
Tel. +49 (0) 9173 79000
Fax +49 (0) 9173 790079

MASCHIO FRANCE Sarl
1, Rue de Mérignan ZA
F - 45240 La Ferte St. Aubin
France
Tel. +33 (0) 2.38.64.12.12
Fax +33 (0) 2.38.64.66.79

MASCHIO IBERICA S.L.
Calle Cabernet, 10
Poligono Industrial Clot de Moja
Olerdola - 08734 Barcelona
Tel. +34 93.81.99.058
Fax +34 93.81.99.059

MASCHIO-GASPARDO USA Inc
120 North Scott Park Road
Eldridge, IA 52748 - USA
Ph. +1 563 2859937
Fax +1 563 2859938
e-mail: info@maschio.us

MASCHIO GASPARDO SpA
Stabilimento produttivo
Via Mussons, 7 - 33075
Morsano al Tagliamento (PN) - Italy
Tel. +39 0434 695410
Fax +39 0434 695425
Email: info@gaspardo.it

000 МАСКИО-ГАСПАРДО РУССИЯ
Улица Пушкина, 117 Б
404126 Волжский
Волгоградская область
Тел. +7 8443 525065
факс. +7 8443 525064

MASCHIO-GASPARDO ROMANIA S.R.L.
Strada Înfrátirii, F.N.
315100 Chisineu-Cris (Arad) -România
Tel. +40 257 307030
Fax +40 257 307040
e-mail: maschio@maschio.ro

MASCHIO MIDDLE EAST
P.O. Box 922388
Amman, 11192 Jordan
Tel. 962 605511384
Fax 962 6 5538398
e-mail: tahaeng@nets.com.jo

GASPARDO-MASCHIO TURCHIA
MASCHIO-GASPARDO CANADA Inc
MASCHIO-GASPARDO CINA
MASCHIO-GASPARDO POLAND
MASCHIO-GASPARDO UCRAINA
GASPARDO BIELORUSSIA
MASCHIO-GASPARDO KOREA