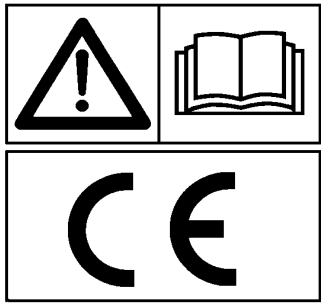

GASPARDO

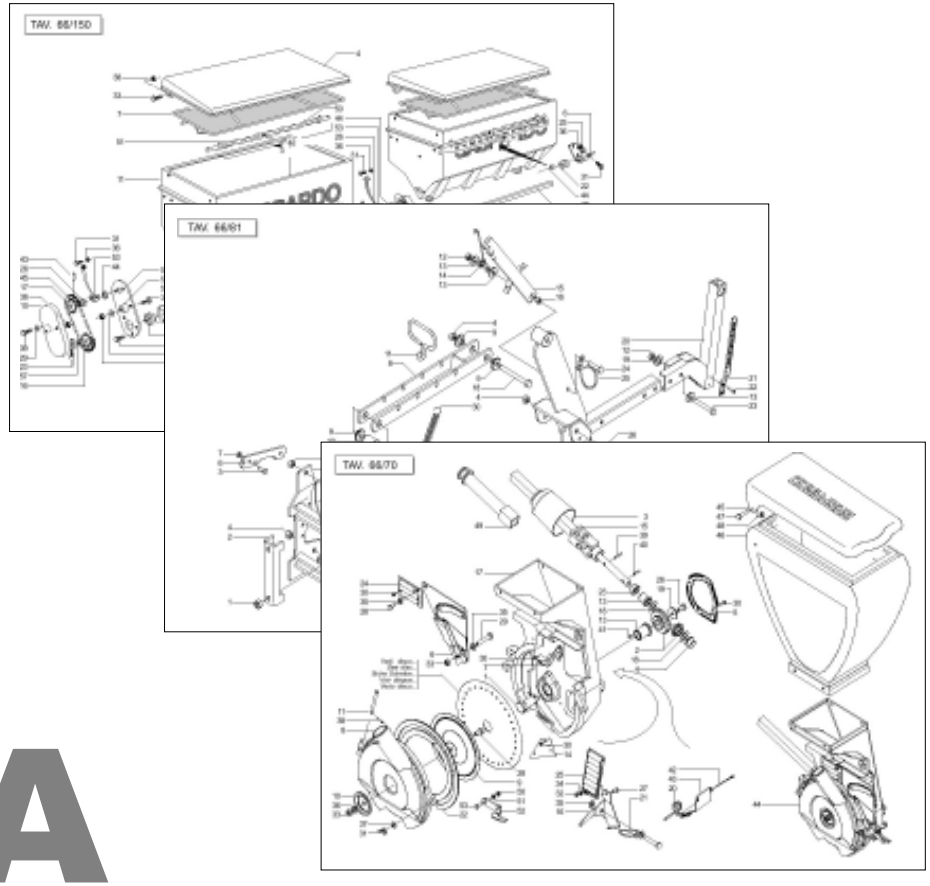


# SP DORADA

**Cod: 19530195 09.2004**

GASPARDO

**IT** PARTI DI RICAMBIO
**EN** *SPARE PARTS*
**DE** ERSATZTEILE
**FR** *PIECES DÉTACHÉES*
**ES** PIEZAS DE REPUESTO

ITALIANO

## PARTI DI RICAMBIO

Le ordinazioni delle parti di ricambio vanno fatte presso i nostri concessionari di zona e devono essere sempre corredate dalle seguenti indicazioni:

- **Tipo, modello e numero di matricola dell'attrezzatura.** Tali dati sono stampigliati nell'apposita targhetta di cui è dotata ogni attrezzatura.

- **Numero di codice della parte richiesta** rilevabile dal catalogo ricambi.

- **Descrizione del particolare e quantità richiesta.**

- **Numero della tavola.**

- **Mezzo di trasporto.** Nel caso questa voce non sia specificata, la Ditta Costruttrice, pur dedicando a questo servizio una particolare cura, non risponde di eventuali ritardi di spedizione dovuti a cause di forza maggiore.
Le spese di trasporto si intendono sempre a carico del destinatario. La merce viaggia a rischio e pericolo del committente anche se venduta franco destino.

**NOTA:** Il termine (**Dx**) **Destro** o (**Sx**) **Sinistro** della macchina o di parti di essa, è inteso guardando la macchina dalla parte posteriore. Le eccezioni saranno indicate.

ENGLISH

## *SPARE PARTS*

*Orders must be transmitted through our area dealers and should always include the following indications:*

- ***Type, model and serial number of the machine.*** *These data are punched on the data plate with which every implement is equipped.*

- ***Code number of the required spare part.*** *This will be found in the spare parts catalogue.*

- ***Description of the part and required quantity.***

- ***Table number.***

- ***Means of dispatch.*** *If this item is not indicated, the Manufacturer, while dedicating particular care to this service, shall not be held responsible for delays in delivery caused by cases of force majeure.*
*Transport expenses shall always be at the consignee's charge. The goods travel at the purchaser's risk and peril even when sold ex destination.*

***NOTE:*** *The symbols* ***(Dx) right*** *and* ***(Sx) left****, concerning the machine or single parts of it, are referred, as in the figure, to a rear view of them. Exceptions will be indicated.*

DEUTSCH

## ERSATZTEILE

Die Bestellungen müssen bei unseren Gebietshändrer aufgegeben werden. Bei der Bestellung sind stets die folgenden Angaben zu machen:

- **Typ, Modell und Serien-Nummer des Geräts**. Diese Daten stehen auf dem Typenschild, mit dem jedes Gerät versehen ist.

- **Artikel Nr. der erforderlichen Ersatzteile.** Diese stehen im Ersatzteil-Katalog.

- **Beschreibung des Ersatzteils und die erforderliche Stückzahl.**

- **Tafelnummer.**

- **Versandmittel.** Wenn dieser Punkt nicht spezifiziert wird, haftet die Herstellerfirma nicht für etwaigen Lieferverzug aufgrund höherer Gewalt, auch wenn er diesen Service besonders aufmerksam abwickelt.
Die Frachtkosten gehen dagegen immer zu Lasten des Empfängers. Die Ware reist auf Gefahr und Risiko des Auftraggebers, auch wenn frei Haus Verkauft vereinbart worden ist.

**N.B.:** Die Merkzeichen (**Dx**) **rechts** und (**Sx**) **links** betreffen eine rückwärtige Aussicht der Maschine oder Teile von ihr (siehe Bild). Ausnahmen werden gezeigt.

FRANÇAIS

## *PIECES DÈTACHÈES*

*Les ordres doivent être effectués auprés de nos concessionaires de zone en précisant les indications suivantes:*

- ***Type, modéle et numéro de série de la machine****. Ces données sont gravées sur la plaque d'identification de chaque outil.*

- ***Numéro de code de la piéce détachée*** *indiqué sur le catalogue des piéces détachées.*

- ***Description de la piéce et quantité requise****.*

- ***Numéro de plan****.*

- ***Moyen d'expédition****. Si cette rubrique n'est pas indiquée, le Constructeur, bien que soucieux de ce service, ne répond pas des retards d'expédition pour des causes de force majeure.*
*Les frais de transport sont toujours à la charge du destinataire. La marchandise voyage aux risques et périls de l'acheteur même si vendue franco de port.*

***N.B.:*** *Les références* ***(Dx) droit*** *et* ***(Sx) gauche*** *de la machine ou des parties de la même, est entendue, comme de la figure, en regardant la machine de derriere dans le sens de marche.*

ESPAÑOL

## RESPUESTOS

Los pedidos han de efectuarse en nuestros consesionarios de zona y deben incluir siempre las siguientes indicaciones:

- **Tipo, modelo y número de matrícula del equipo**. Dichos datos están impresos en la relativa placa presente en el equipo.

- **Número de código de la parte requerida** presente en el catálogo respuestos.

- **Descripcíon de la pieza y cantidad requerida**.

- **Numero de illustración**.

- **Medio de transporte**. En caso que este ítem no esté especificado, el Fabricante, aún prestando la debidas consideraciones para este aspecto, no responde por eventuales retardos de env'o debidos a causas de fuerza mayor.
Los gastos de transporte se consideran siempre a cargo del destinatario. La mercandería viaja bajo riesgo y peligro del comprador, incluso cuando se vende franco destino.

**N.B.**: La refencia (**Dx**) **derecha** o (**Sx**) **izquierda** de la máquina o de sus componentes, se entiende, como en la figura, mirando la máquina por la parte trasera. Se indicarán las excepciones.

| *N° Tavola* | *Descrizione* | *Pagina* |
|---|---|---|
| TAV. 66/12 | Telaio e attacco 3 punti | 4 |
| TAV. 66/20 | Comando segnafile meccanico | 6 |
| TAV. 66/34 | Segnafile | 8 |
| TAV. 66/292 | Segnafile rinforzato | 10 |
| TAV. 66/42 | Impianto oleodinamico segnafile | 12 |
| TAV. 66/52 | Depressore | 14 |
| TAV. 66/61 | Scatola di rinvio elemento | 16 |
| TAV. 66/74 | Distributore semi | 18 |
| TAV. 66/230 | Dischi di semina | 22 |
| TAV. 66/83 | Telaio elemeto | 24 |
| TAV. 66/94 | Elementi assolcatori | 26 |
| TAV. 66/102 | Ruote di compressione | 28 |
| TAV. 66/110 | Bilanciere | 30 |
| TAV. 66/261 | Esclusione elettrica file di semina | 34 |
| TAV. 66/123 | Cambio | 36 |
| TAV. 66/133 | Ruote di trasmissione | 40 |
| TAV. 66/133-A | Ruote di trasmissione anteriori | 44 |
| TAV. 66/320 | Scaletta ruote portanti | 48 |
| TAV. 66/282 | Ruote regolabili | 50 |
| TAV. 66/220 | Presa di potenza posteriore | 54 |
| TAV. 66/272 | Kit ruote per terreni sassosi - Flangiatura ruote | 56 |
| TAV. 66/242 | Supporti serbatoi spandiconcime ferro | 58 |
| TAV. 66/251 | Serbatoi spandiconcime ferro | 60 |
| TAV. 66/141 | Supporti serbatoi spandiconcime plastica | 64 |
| TAV. 66/152 | Serbatoi spandiconcime plastica | 66 |
| TAV. 66/302 | Supporti serbatoio spandiconcime unico | 70 |
| TAV. 66/312 | Serbatoio spandiconcime unico | 72 |
| TAV. 66/163 | Elementi di concimazione | 76 |
| TAV. 66/203 | Speedy set | 78 |
| TAV. 66/191 | Concimazione pneumatica | 80 |
| TAV. 66/173 | Microgranulatore | 82 |
| TAV. 66/182 | Trasmissione spandiconcime e microgranulatore | 86 |
| TAV. 66/330 | Applicazione doppio microgranulatore | 88 |
| TAV. 66/211 | Accessori | 90 |

TAV. 66/12

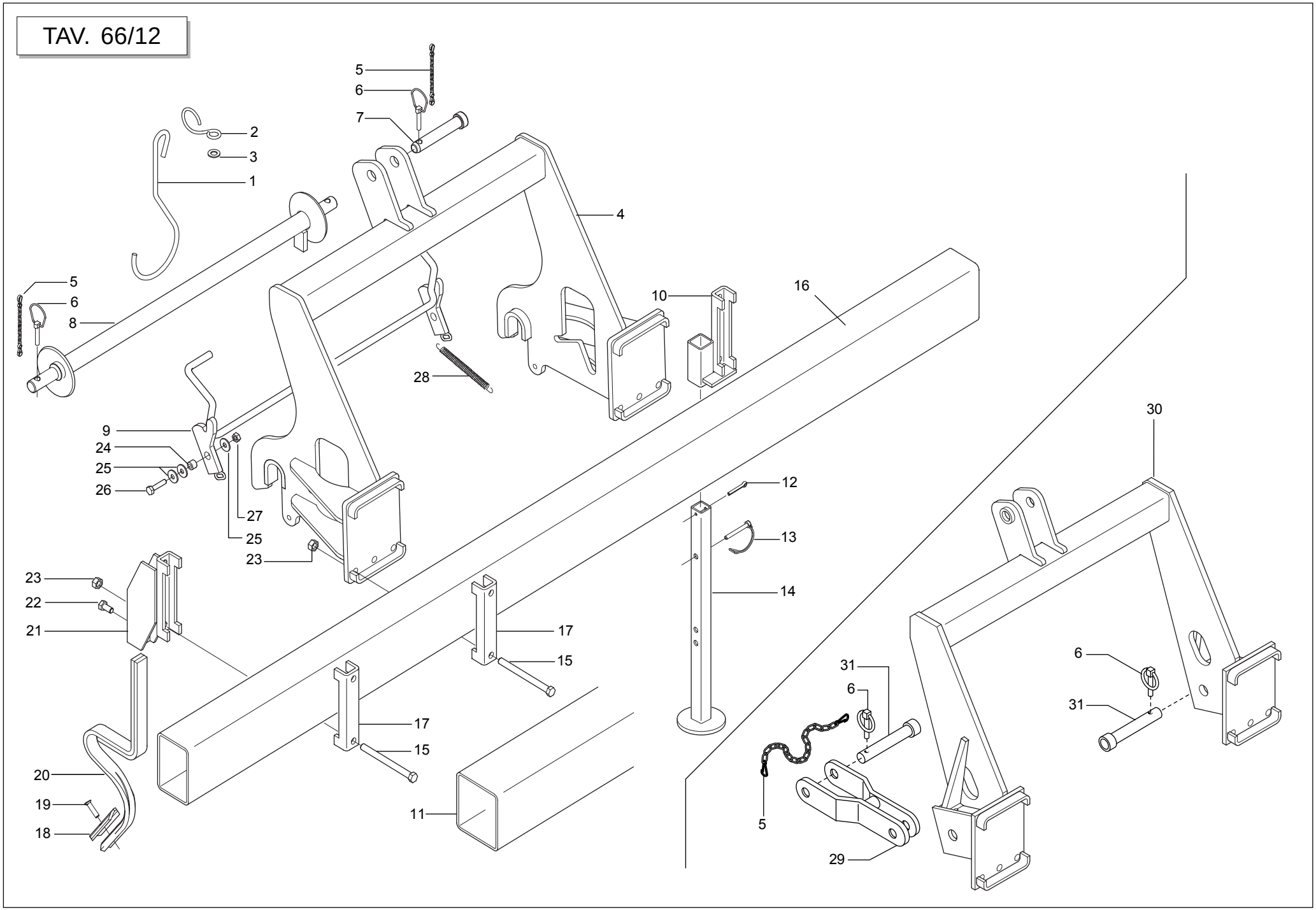




GASPARDO

cod. 19530195

## *TELAIO E ATTACCO 3 PUNTI*

TAV. 66/12

| Pos. | Cod. | Descrizione | Description | Description | Benennung | Descripcion |
|---|---|---|---|---|---|---|
| 1 | 15411190 | GANCIO SOSTEGNO CARDANO | UNIVERSAL JOINT SUPPORT HOOK | CROCHET SOUTIEN CARDAN | KARDANSTsTZHAKEN | GANCHO SOTN CARDæN C |
| 2 | 65336004 | MOLLA SPEC.ZN AGG.SEMINAT. SP | SPEC SPRING- ZN ADD. SEEDER SP | RESSORT SPEC. ZN ATTELAGE SEME | SPEZIALFEDER ZN SZELEM. KUPPL. | MUELLE ESPEC. ZN CONEX. SEMBRA |
| 3 | F01410088 | RONDELLA D14 UNI 6592 ZN | WASHER D14 UNI 6592 GALVANIZED | RONDELLE D14 UNI 6592 ZN | UNTERLEGSCHEIBE D14 UNI 6592 Z | ARANDELA D14 UNI 6592 ZN |
| 4 | 16610370 | ATTACCO TERZO PUNTO RAPIDO | ATTACHMENT | FIXATION | ANSCHLUSS | CONEXIN |
| 5 | 07000039 | CATENELLA | CHAIN | CHAINETTE | KETTE | CADENA |
| 6 | F02200507 | SPINA A SCATTO D 9 B/83 | SNAP PIN D 9 B/83 | FICHE A DETENTE D. 9 B/83 | EINRASTSTIFT D 9 B/83 | CLAVIJA DE MUELLE D 9 B/83 |
| 7 | F20100062 | SPINA GASPARDO 25X128 | GASPARDO PIN 25X128 | BROCHE GASPARDO 25X128 | STIFT GASPARDO25X128 | CLAVIJA GASPARDO 25X128 |
| 8 | 15211270 | BARRA 1°-2° PUNTO | 1-2 LINKAGE BAR | BARRE 1.-2. P. | STAB 1.-2. P. | BARRA 1.-2. P. |
| 9 | 15211411 | FERMO ATTACCO RAPIDO | QUICK LINKAGE STOP | ARRET ATTELAGE RAPIDE | FESTSTELLVORRICHTUNG SCHNELLAN | BLOQUEO CONEXION RAPIDA |
| 10 | 15410471 | SUPP.PUNTELLO TEL.150 | PROP SUPPORT TEL.150 | SUPP. ETRESILLON TEL.150 | HALTERUNG RAHMENSTsTZE 150 | SOPORTE PUNTAL BASTIDOR 150 |
| 11 | 22505031 | TUBO TELAIO L=2800 | FRAME PIPE L=2800 | TUBE BATI L=2800 | ROHR RAHMEN L=2800 | TUBO BASTIDOR L=2800 |
| 11 | 22505032 | TUBO TELAIO L=3200 | FRAME PIPE L=3200 | TUBE BATI L=3200 | ROHR RAHMEN L=3200 | TUBO BASTIDOR L=3200 |
| 11 | 15210690 | TUBO TELAIO FISSO 150X5000 | FIXED FRAME PIPE 150X5000 | TUBE BATI FIXE 150X5000 | ROHR FIXER RAHMEN 150X5000 | TUBO BASTIDOR FIJO 150X5000 |
| 11 | 22505035 | TUBO TELAIO L=5800 | FRAME PIPE L=5800 | TUBE BATI L=5800 | ROHR RAHMEN L=5800 | TUBO BASTIDOR L=5800 |
| 11 | 15210740 | TUBO TELAIO FISSO 150X6000 | FIXED FRAME PIPE 150X6000 | TUBE BATI FIXE 150X6000 | ROHR FIXER RAHMEN 150X6000 | TUBO BASTIDOR FIJO 150X6000 |
| 12 | F02200246 | COPIGLIA 6 X45 1336 ZN | SPLIT PIN 6 X45 1336 GALVAN. | GOUPILLE 6 X45 1336 ZN | SPLINT 6 X45 1336 ZN | PASADOR 6 X45 1336 ZN |
| 13 | F02200584 | SPINA DI SICUREZZA D.12X70 ZN | GALVAN. SAFETY PIN D.12X70 | GOUPILLE DE S+CURIT+ D.12X70 Z | SCHERSTIFT D.12X70 ZN | PASADOR DE SEGURIDAD ¤ 12X70 Z |
| 14 | 15410492 | PUNTELLO | PROP | +TR+SILLON | ST_TZE | PUNTAL |
| 15 | 41601101 | VITE 14 X160 5737 8.G | BOLT M 14 X160 5737 8.G | VIS M 14 X160 5737 8.G | SCHRAUBE M 14 X160 5737 8.G | TORNILLO M 14 X160 5737 8.G |
| 15 | 41602124 | VITE 14X220 5737 8.G ZN | BOLT 14X220 5737 8.G GALVANIZ. | VIS 14X220 5737 8.G ZN | SCHRAUBE 14X220 5737 8.G ZN | TORNILLO 14X220 5737 8.G ZN |
| 16 | 16610040 | TUBO RET.150X100X1900 | RECTANGULAR PIPE 150X100X1900 | TUBE RECTANGULAIRE 150X100X190 | RECHTECK.ROHR150X100X1900 | TUBO RECT.150X100X1900 |
| 16 | 16610050 | TUBO R.150X100X2480 | RECTANGULAR PIPE 150X100X6X248 | TUBE RECT.150X100X6X2480 | R. ROHR150X100X6X2480 | TUBO RECT.150X100X6X2480 |
| 16 | 16610060 | TUBO R.150X100X3500 | RECTANGULAR PIPE 150X100X3500 | TUBE RECT.150X100X3500 | R. ROHR150X100X3500 | TUBO RECT.150X100X3500 |
| 16 | 16610070 | TUBO R.150X100X4200 | RECTANGULAR PIPE 150X100X4200 | TUBE RECT.150X100X4200 | R. ROHR150X100X4200 | TUBO RECT.150X100X4200 |
| 16 | 16610080 | TUBO R.150X100X 6X2750 | RECTANGULAR PIPE 150X100X6X275 | TUBE RECT.150X100X6X2750 | R. ROHR150X100X6X2750 | TUBO RECT.150X100X6X2750 |
| 16 | 15211250 | TUBO R.150X100X 6X2990 | RECTANGULAR PIPE 150X100X6X299 | TUBE RECT.150X100X6X2990 | R. ROHR150X100X6X2990 | TUBO RECT.150X100X6X2990 |
| 17 | 15110091 | SCONTRO A U | STRIKER | BRIDE 150 MM | ANSCHLAG | ELEMENTO DE EMPALME |
| 18 | F20120017 | VOMERO REVERS.F37 40X5X135 | SWIVEL PLOUGH-SHARE F37 40X5X1 | SOC REVERS. F37 40X5X135 | UMKEHRBARE SCHAR F37 40X5X135 | REJAS REVERS. F37 40X5X135 |
| 19 | 67002011 | BULLONE TESTA OVALE M10X35 | OVAL HEAD BOLT M10X35 | BOULON TETE OVALE M10X35 | SCHRAUBE OVALER KOPFM10X35 | PERNO CABEZA OVALADA M10X35 |
| 20 | 22270462 | MOLLA ROMPITRACCIA VERNICIATA | PAINTED TRACE BR. SPRING | RESSORT BRISEUR DE TRACES VERN | FEDER SPURMESSER LACKIERT | MUELLE ROMPEHUELLA BARNIZADA |
| 21 | 15471612 | SUPPORTO ROMPITRACCIA Q.150 | ROW-BREAKER SUPPORT 150 | SUPPORT EFFACEUR DE TRACES 150 | HALTERUNG SPURAUFREISSER 150 | SOPORTE BORRAHUELLAS 150 |
| 22 | F01020510 | VITE 12X30 5739 8.G ZN | BOLT12X30 5739 8.G GALVANIZED | VIS 12X30 5739 8.G ZN | SCHRAUBE 12X30 5739 8.G ZN | TORNILLO 12X30 5739 8.G ZN |
| 23 | F01200306 | DADO 14 5588 6.8 ZN | NUT 14 UNI 5588 6.8 GALVANIZED | ECROU 14 UNI 5588 6.8 ZN | MUTTER 14 UNI 5588 6.8 ZN | TUERCA 14 UNI 5588 6.8 ZN |
| 24 | 18800320 | BOCCOLA 10,25X18X13 | BUSHING 10,50X18X31 | BOITE 10,50X18X31 | B_CHSE 10,50X18X31 | CASQUILLO 10,50X18X31 |
| 25 | F01420060 | ROND.PIANA 11X30X2,5 6593 ZN | FLAT WASHER 11X30X2-5 6593 ZN | ROND.PLATE 11X30X2-5 6593 ZN | SCHEIBE 11X30X2-5 6593 ZN | ARAND. PLANA 11X30X2-5 6593 ZN |
| 26 | F01020484 | VITE 10X45 5739 8.G ZN | BOLT 10X45 5739 8.G GALVANIZED | VIS 10X45 5739 8.G ZN | SCHRAUBE 10X45 5739 8.G ZN | TORNILLO 10X45 5739 8.G ZN |
| 27 | F01220233 | DADO TRISTOP M10 | NUT TRISTOP M10 | ECROU TRISTOP M10 | MUTTER TRISTOP M10 | TUERCA TRISTOP M10 |
| 28 | 18902960 | MOLLA TRAZ.TRASM.RUOTA ZN | TRANSMISSION TENSIONER SPRING | RESSORT TRACT. ENTRAIN. ROUE Z | ZUGFEDER RADANTRIEB ZN | MUELLE TRAC. TRANSM.RUEDA ZN |
| 29 | 15410122 | PRIMO/SECONDO PUNTO | FIRST/SECOND POINT | PREMIER/DEUXIEME POINT | ERSTER/ZWEITER PUNKT | PRIMER/SEGUNDO PUNTO |
| 30 | 15211770 | TERZO PUNTO RINF.150 | THIRD POINT REINFORCEMENT 150 | TROISIEME POINT RENFORCE | DRITTER PUNKT VERSTZRKT | TERCER PUNTO REF. |
| 31 | F20100078 | SPINA GASPARDO 28X99 | GASPARDO PIN 28X99 | BROCHE GASPARDO 28X99 | STIFT GASPARDO 28X99 | CLAVIJA GASPARDO 28X99 |

TAV. 66/20

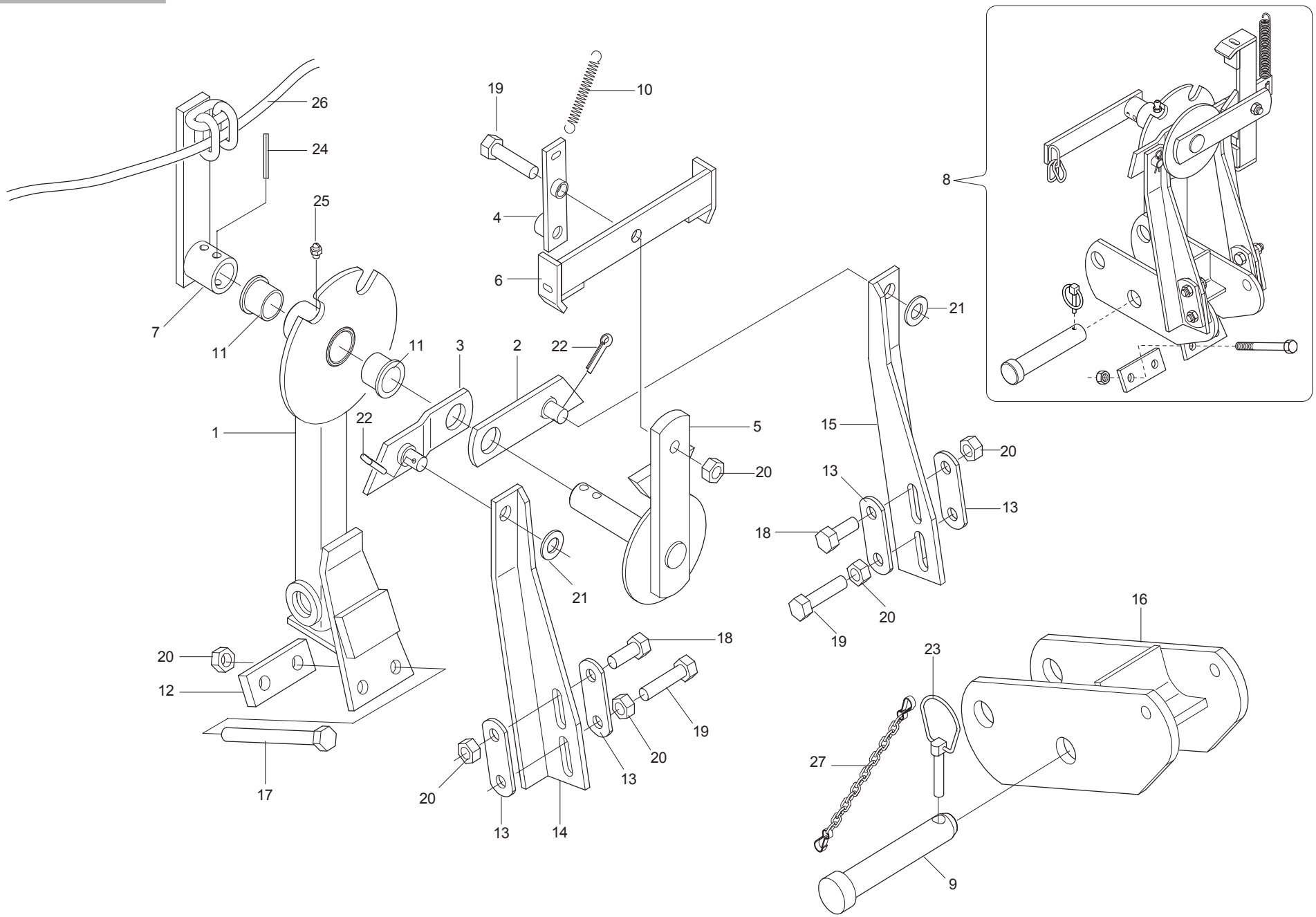




GASPARDO

cod. 19530195

## *COMANDO SEGNAFILE MECCANICO*

TAV. 66/20

| Pos. | Cod. | Descrizione | Description | Description | Benennung | Descripcion |
|---|---|---|---|---|---|---|
| 1 | 15410920 | COMANDO SEGNAFILE | ROWMARKER CONTROL | COMMANDE TRACEUR | SPURREISSERSCHALTUNG | MANDO MARCADOR DE FILAS |
| 2 | 15410950 | LEVA PIANA | FLAT LEVER | LEVIER PLAT | FLACHER HEBEL | PALANCA PLANA |
| 3 | 15410960 | LEVA STAMPATA | PRESSED LEVER | LEVIER IMPRESSION | GEPRESSTER HEBEL | PALANCA MOLDEADA |
| 4 | 15410990 | LEVA SCATTO SEGNAFILE | ROWMARKER SNAP LEVER | LEVIER DETENTE TRACEUR | SCHNAPPHEBEL REIHENANREISSER | PALANCA DISPARO MARCADOR DE FI |
| 5 | 15411110 | SUPPORTO LEVA SCATTO | SNAP LEVER SUPPORT | SUPPORT LEVIER DETENTE | HALTERUNG SCHNAPPHEBEL | SOPORTE PALANCA DISPARADOR |
| 6 | 15411120 | FERMO LEVE AGGANCIO | LEVERS HOOK UP STOP | ARRET LEVIER ACCORCHAGE | FESTSTELLVORRICHTUNG KUPPLUNGS | BLOQUEO PALANCA ENGANCHE |
| 7 | 15411130 | FERMO CORDE SEGNAFILE SP | ROWMARKER ROPE STOP SP | ARRET CORDES TRACEUR SP | FESTSTELLVOR. SEILE REIHENANRE | BLOQUEO CUERDAS MARCADOR FILAS |
| 8 | 15411140 | MONT.SCATTO AUTOMATICO SP | UPRIGHT- AUTOMATIC SNAP SP | MONTANT DETENTE AUTOMATIQUE SP | STZNDER AUTOMATISCHES EINRASTE | MONT.DISPARADOR AUTOMæTICO SP |
| 9 | F20100062 | SPINA GASPARDO 25X128 | GASPARDO PIN 25X128 | BROCHE GASPARDO 25X128 | STIFT GASPARDO25X128 | CLAVIJA GASPARDO 25X128 |
| 10 | 18902680 | MOLLA TRAZ.ZN SERBATOIO SV290 | GALV.TANK TRACT.SPRING SV290 | RESSORT RAZ.ZN RESERVOIR SV290 | ZUGFEDER ZN BEHZLTER SV290 | MUELLE TRAC.ZN DEPSITO SV290 A |
| 11 | 21120067 | BOCCOLA IN BRONZO | BRONZE BUSHING | BOITE EN BRONZE | BRONZEBsCHSE | CASQUILLO DE BRONCE |
| 12 | 22220124 | SCONTRO | STRIKER PLATE | BUTEE | ANSCHLAG | ELEMENTO DE EMPALME |
| 13 | 22220132 | SCONTRO BRACCI | STRIKER PLATE- ARMS | BUTEE BRAS | ARME ANSCHLAG | ELEMENTO DE EMPALME BRAZOS |
| 14 | 22270021 | BRACCIO INF.SX COMANDO SEGNAF. | ARM-LOWER LEFT ROWMARK. CONTR. | BRAS INF. GCH. COMMANDE TRACEU | LINKER UNT. ARM SPURREISSERSTE | BRAZO INF.IZQ. MANDO MARC. FIL |
| 15 | 22270022 | BRACCIO INF.DX COMANDO SEGNAF. | RIGHT LOWER ARM-ROWMARK.CONTR. | BRAS INF. DRT. COMMANDE TRACEU | RECHTER UNT. ARM SPURREISSERST | BRAZO INF.DER. MANDO MARC. FIL |
| 16 | 13810341 | ATTACCO COMANDO 3°PUNTO | CONTROL COUPLING 3. POINT | FIXATION COMMANDE 3 POINT K | UPPLUNG STEUERUNG 3. PUNKT C | ONEXIN MANDO 3PUNTO OPR |
| 17 | 41601068 | VITE 12X140 5737 8.G * | SCREW 12X140 5737 8.G | VIS 12X140 5737 8.G * | SCHRAUBE 12X140 5737 8.G | TORNILLO 12X140 5737 8.G |
| 18 | F01020510 | VITE 12X30 5739 8.G ZN | BOLT12X30 5739 8.G GALVANIZED | VIS 12X30 5739 8.G ZN | SCHRAUBE 12X30 5739 8.G ZN | TORNILLO 12X30 5739 8.G ZN |
| 19 | F01020517 | VITE 12X50 5739 8.G ZN | BOLT 12X50 5739 8.G GALVANIZED | VIS 12X50 5739 8.G ZN | SCHRAUBE 12X50 5739 8.G ZN | TORNILLO 12X50 5739 8.G ZN |
| 20 | F01200293 | DADO 12 5588 6.8 ZN | NUT 12 UNI 5588 6.8 GALVANIZED | ECROU 12 UNI 5588 6.8 ZN | MUTTER 12 UNI 5588 6.8 ZN | TUERCA 12 UNI 5588 6.8 ZN |
| 21 | F01410088 | RONDELLA D14 UNI 6592 ZN | WASHER D14 UNI 6592 GALVANIZED | RONDELLE D14 UNI 6592 ZN | UNTERLEGSCHEIBE D14 UNI 6592 Z | ARANDELA D14 UNI 6592 ZN |
| 22 | F02200227 | COPIGLIA 5 X30 1336 ZN | SPLIT PIN 5 X30 1336 GALVAN. | GOUPILLE 5 X30 1336 ZN | SPLINT 5 X30 1336 ZN | PASADOR 5 X30 1336 ZN |
| 23 | F02200507 | SPINA A SCATTO D 9 B/83 | SNAP PIN D 9 B/83 | FICHE A DETENTE D. 9 B/83 | EINRASTSTIFT D 9 B/83 | CLAVIJA DE MUELLE D 9 B/83 |
| 24 | F02100141 | SPINA EL.8 X36 DIN 1481 | PIN EL. 8 X36 DIN 1481 | FICHE EL. 8 X36 DIN 1481 | SPANNSTIFT 8 X36 DIN 1481 | CLAVIJA EL.8 X36 DIN 1481 |
| 25 | F01100011 | INGRASS.A SFERE M6X1/A | SPHERE NIPPLE M6X1/A | GRAISSEUR A BILLES M6X1/A | KUGELFETTBsCHSE M6X1/A | ENGRAS. DE ESFERAS M6X1/A |
| 26 | F05150399 | CORDA POLIPROPILENE D.12 | POLIPROPILENE 12 CABLE | CORDE POLIPROPILENE 12 | SEIL POLIPROPILENE 12 | CUERDA POLIPROPILENE 12 |
| 27 | 07000039 | CATENELLA | CHAIN | CHAINETTE | KETTE | CADENA |

TAV. 66/34

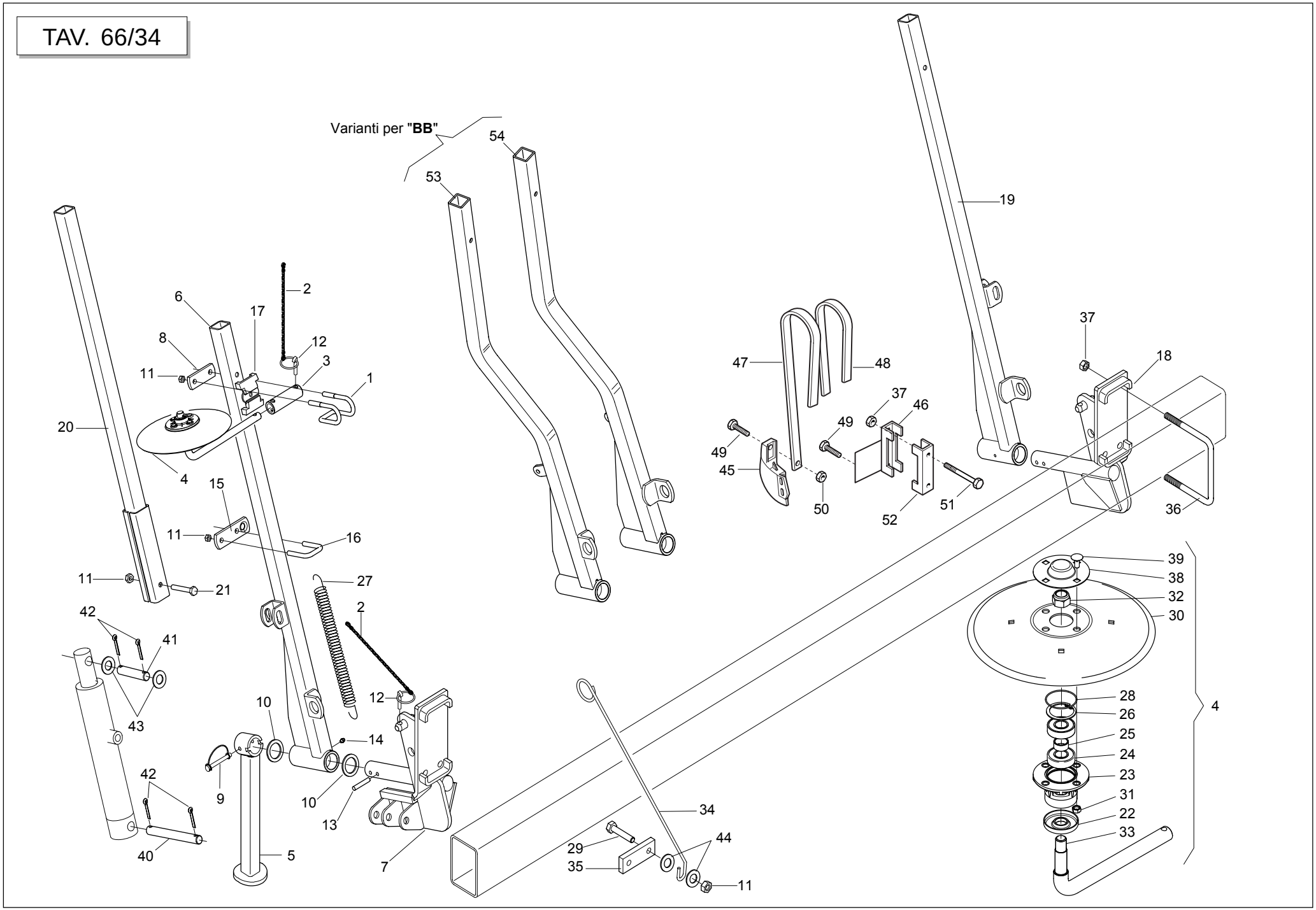




GASPARDO

## *SEGNAFILE OLEODINAMICO*

TAV. 66/34

| Pos. | Cod. | Descrizione | Description | Description | Benennung | Descripcion |
|---|---|---|---|---|---|---|
| 1 | 16610230 | CAVALLOTTO MANICOTTO DISCO | DISK SLEEVE U BOLT | ETRIER MANCHON DISQUE | _BERBR_CKUNG MUFFE SCHEIBE | ABRAZADERA MANGUITO DE DISCO |
| 2 | 07000039 | CATENELLA | CHAIN | CHAINETTE | KETTE | CADENA |
| 3 | 17111290 | MANICOTTO DISCO | DISC COUPLING SLEEVE | MANCHON DISQUE | SCHEIBENMUFFE | MANGUITO DISCO |
| 4 | 16610200 | DISCO D.320 COMPL | DISK D.320 COMPL | DISQUE D.320 COMPLET | SCHEIBE D.320 KOMP | DISCO D.320 COM |
| 5 | 15412720 | PUNTELLO | PROP | +TR+SILLON | ST_TZE | PUNTAL |
| 6 | 15412691 | BRACCIO SEGNAFILE SX | LH FOLDING ARM | BRAS PLIANT GCH. | KLAPPBARER ARM LI. | BRAZO PLEGABLE IZQ. |
| 7 | 15412680 | SUPPORTO SEGNAFILE SX | LEFT ROWMARKER SUPPORT | SUPPORT TRACEUR GCH | HALTERUNG REIHENANREISSER LI | SOPORTE MARCADOR DE FILAS IZQ |
| 8 | 23440198 | SCONTRO ATTACCO BRACCIO HL/2 | STRIKER PLATE ARM ATTACH. HL/2 | BUTEE FIXATION BRAS HL/2 | ARMKUPPLUNGSANSCHLAG HL/2 | ELEMENTO DE EMPALME CONEXIN BC |
| 9 | F02200562 | SPINA DI SICUREZZA D.8X70 ZN | SAFETY PIN D.8X70 ZN | FICHE DE SECURITE D. 8X70 ZN | SICHERHEITSSTIFT D.8X70 ZN | CLAVIJA DE SEGURIDAD D.8X70 ZN |
| 10 | 18701600 | RONDELLA 35,5 X50 X3 ZN | WASHER 35.5 X 50 X 3- GALVANIZ | RONDELLE 35-5 X50 X3 ZN | UNTERLEGSCHEIBE 35-5 X50 X3 | ARANDELA 35-5 X50 X3 ZN |
| 11 | F01200270 | DADO 10 5588 6.8 ZN | SCREW 10 UNI 5588 6.8 GALVANIZ | ECROU 10 UNI 5588 6.8 ZN | MUTTER 10 UNI 5588 6.8 ZN | TUERCA 10 UNI 5588 6.8 ZN |
| 12 | F02200507 | SPINA A SCATTO D 9 B/83 | SNAP PIN D 9 B/83 | FICHE A DETENTE D. 9 B/83 | EINRASTSTIFT D 9 B/83 | CLAVIJA DE MUELLE D 9 B/83 |
| 13 | F02100146 | SPINA EL.8 X55 DIN 1481 | PIN EL. .8 X55 DIN 1481 | FICHE EL.8 X55 DIN 1481 | SPANNSTIFT 8 X55 DIN 1481 | CLAVIJA EL.8 X55 DIN 1481 |
| 14 | F01100011 | INGRASS.A SFERE M6X1/A | SPHERE NIPPLE M6X1/A | GRAISSEUR A BILLES M6X1/A | KUGELFETTBsCHSE M6X1/A | ENGRAS. DE ESFERAS M6X1/A |
| 15 | 15412810 | ATTACCO FUNE SEGNAFILE | ROW MARKER ROPE LINKAGE | FIXATION CABLE TRACEUR | SEILKUPPLUNG SPURANZEIGER | CONEXIÓN CABLE MARCADOR DE FIL |
| 16 | 16240500 | CAVALLOTTO ZN | U-BOLT GALVAN | CAVALIER ZN | BsGELBOLZEN ZN | PERNO EN U ZN |
| 17 | 19203740 | ELEMENTO FISSAGGIO GAMBO ZN. | GALVAN. SHANK FASTENING ELEMEN | ELEMENT FIXATION TIGES ZN | BEFESTIGUNGSELEMENT SCHZCHTE Z | ELEMENTO SUJECIN VµSTAGOS ZN |
| 18 | 15412850 | SUPPORTO SEGNAFILE DX | RIGHT ROWMARKER SUPPORT | SUPPORT TRACEUR DRT | HALTERUNG REIHENANREISSER RE | SOPORTE MARCADOR DE FILAS DER |
| 19 | 15412861 | BRACCIO SEGNAFILE DX | RH FOLDING ARM | BRAS PLIANT DRT. | KLAPPBARER ARM RE. | BRAZO PLEGABLE DER. |
| 20 | 15412780 | PROLUNGA BRACCIO SEGNAFILE | ROWMARKER EXTENSION | RALLONGE TRACEUR SOL. | VERLZNGERUNG SPURREISSER | PROLONG. MARC. DE FILAS |
| 21 | F01020122 | VITE 10X70 5737 8.G ZN | BOLT10X70 5737 8.G GALVANIZED | VIS 10X70 5737 8.G ZN | SCHRAUBE 10X70 5737 8.G ZN | TORNILLO 10X70 5737 8.G ZN |
| 22 | 19203730 | FONDELLO ZN | GALVAN. HOLDER | FOND ZN | BODENSCHEIBE ZN | FONDO ZN |
| 23 | 16610160 | SUPP.CUSCINETTI DISCO SEGN.ZN. | GALVAN. ROWMAKER DISK BEARING | SUPPORT ROULEMENTS DISQUE TRAC | SCHEIBENLAGERHALTERUNG | SOPORTE COJINETE DE DISCO MARC |
| 24 | F04010164 | CUSCINETTO 6204 2RS | BEARING 6204 2RS | ROULEMENT 6204 2RS | LAGER 6204 2RS | COJINETE 6204 2RS |
| 25 | 18801270 | BOCCOLA 21 X25 X12 ZN | BUSHING 21 X 25 X 12 ZN | BOITE 21 X25 X12 ZN | BsCHSE 21 X25 X12 ZN | CASQUILLO 21 X25 X12 ZN |
| 26 | F02050631 | ANELLO ARR.47 UNI 7437-75 | STOP RING 47 UNI 7437-75 | BAGUE ARRET 47 UNI 7437-75 | RING 47 UNI 7437-75 | ANILLO PARADA 47 UNI 7437-75 |
| 27 | 65337004 | MOLLA TRAZ.SOLLEV. FU | TRACTION SPRING LIFT. FU | RESSORT TRACT. LEVAGE FU | ZUGFEDER HEBUNG FU | MUELLE TRAC. LEVDEL. FU |
| 28 | F03010576 | GUARNIZIONE OR 2200 | O-RING 2200 | GARNITURE OR 2200 | DICHTUNG OR 2200 | JUNTA OR 2200 |
| 29 | F01020476 | VITE 10X30 5739 8.G ZN | BOLT 10X30 5739 8.G GALVANIZED | VIS 10X30 5739 8.G ZN | SCHRAUBE 10X30 5739 8.G ZN | TORNILLO 10X30 5739 8.G ZN |
| 30 | 16610170 | DISCO SEGNAFILE D.320 | ROW MARKER DISK D.320 | DISQUE TRACEUR D320 | SPURREISSERSCHEIBE D. 320 | DISCO MARCARDOR DE FILAS O 320 |
| 31 | F01200244 | DADO 8 5588 6.8 ZN | NUT 8 UNI 5588 6.8 GALVANIZED | ECROU 8 UNI 5588 6.8 ZN | MUTTER 8 UNI 5588 6.8 ZN | TUERCA 8 UNI 5588 6.8 ZN |
| 32 | F01230098 | DADO AUTOB.NOR.18 ZN | NORMAL SELF-LOCKING NUT 18 GAL | ECROU AUTOB. NOR. 18 ZN | MUTTER AUTOB.NOR.18 ZN | TUERCA AUTOB. NOR.18 ZN |
| 33 | 16610180 | PERNO REGGIDISCO SEGNAF. | ROWMAKER DISC-HOLDER PIN | PIVOT PORTE-DISQUE TRACEUR | SCHEIBENTRAGBOLZEN | PERNO SOPORTE DISCO MARCAFILA |
| 34 | 65336135 | MOLLA GUIDACORDA D.45 | ROPE GUIDE SPRING D.45 | RESSORT GUIDE-CORDE D. 45 | FEDER SEILFsHRUNG D.45 | MUELLE GUA CUERDA D.45 A |
| 35 | 15470810 | SUPPORTO GUIDACORDA SP | ROPE GUIDE SUPPORT SP | SUPPORT GUIDE-CORDE SP | HALTERUNG SEILFsHRUNG SP | SOPORTE GUIACUERDA SP |
| 36 | 15413150 | CAVALLOTTO M14X165-128 | U-BOLT M14X165-128 | CAVALIER M14X165-128 | VERBINDUNG M14X165-128 | PERNO EN U M14X165-128 |
| 37 | F01200306 | DADO 14 5588 6.8 ZN | NUT 14 UNI 5588 6.8 GALVANIZED | ECROU 14 UNI 5588 6.8 ZN | MUTTER 14 UNI 5588 6.8 ZN | TUERCA 14 UNI 5588 6.8 ZN |
| 38 | 16610190 | CHIUSURA CUSCINETTO ZN | GALVAN. BEARING CLOSURE | FERMETURE ROULEMENT ZN | LAGERVERSCHLUSS ZN | CIERRE COJINETE ZN |
| 39 | F01060040 | VITE 8 X20 5732 4.6 ZN | BOLT 8 X20 5732 4.6 GALVANIZED | VIS 8 X20 5732 4.6 ZN | SCHRAUBE 8 X20 5732 4.6 ZN | TORNILLO 8 X20 5732 4.6 ZN |
| 40 | 15413020 | SPINA 15X120 ZN | GALVANIZED PIN 15X120 | GOUPILLE 15X120 ZN | STIFT 15X120 ZN | CLAVIJA 15X120 ZN |
| 41 | 15413010 | SPINA 15X62 ZN | PIN 15X62 ZN | GOUPILLE 15X62 ZN | BOLZENSTIFT 15X62 ZN | PASADOR 15X62 ZN |
| 42 | F02200194 | COPIGLIA 4 X25 1336 ZN | SPLIT PIN 4 X25 1336 GALVAN. | GOUPILLE 4 X25 1336 ZN | SPLINT 4 X25 1336 ZN | PASADOR 4 X25 1336 ZN |
| 43 | 20970142 | RONDELLA 32X4X15,5 | WASHER 32X4X15-5 | RONDELLE 32X4X15-5 | UNTERLEGSCHEIBE 32X4X15-5 | ARANDELA 32X4X15-5 |
| 44 | 20970111 | RONDELLA 29,8X2X16,5 | WASHER 29,8X2X16,5 | RONDELLE 29,8X2X16,5 | UNTERLEGSCHEIBE 29,8X2X16,5 | ARANDELA 29,8X2X16,5 |
| 45 | 13811261 | FALCIONE SEGNAFILE INT. | INNER ROWM. CUTTER | HACHOIR TRACEUR INT. | SZSCHAR SPURREISSER INNEN | GUADA¥ADORA MARCADOR DE HILE |
| 46 | 15470232 | SUPPORTO MOLLA PIATTA 150 | FLAT SPRING SUPPORT 150 | SUPPORT RESSORT PLAT 150 | HALTERUNG FLACHFEDER 150 | SOPORTE MUELLE PLANO 150 |
| 47 | 18901092 | GAMBO CONCIMAZ.MOLLA PIATTA SP | FLAT SPRING MANURING LEG SP | TIGE FUMAGE RESSORT PLAT SP | SCHAFT DsNGUNG FLACHE FEDER SP | VæSTAGO ABONO MUELLE CHATO SP |
| 48 | 18902861 | RINF.MOLLA PIATTA CONCIM.SP | MANUR.PLATE SPRING REINFORCE.S | RENF. RESSORT PLAT FUMAGE SP | VERSTZRKUNG FLACHFEDER DsNGUNG | REFUERZO MUELLE ABONO SP |
| 49 | F01020512 | VITE 12X35 5739 8.G ZN | BOLT 12X35 5739 8.G GALVANIZED | VIS 12X35 5739 8.G ZN | SCHRAUBE 12X35 5739 8.G ZN | TORNILLO 12X35 5739 8.G ZN |
| 50 | F01200293 | DADO 12 5588 6.8 ZN | NUT 12 UNI 5588 6.8 GALVANIZED | ECROU 12 UNI 5588 6.8 ZN | MUTTER 12 UNI 5588 6.8 ZN | TUERCA 12 UNI 5588 6.8 ZN |
| 51 | 41602124 | VITE 14X220 5737 8.G ZN | BOLT 14X220 5737 8.G GALVANIZ. | VIS 14X220 5737 8.G ZN | SCHRAUBE 14X220 5737 8.G ZN | TORNILLO 14X220 5737 8.G ZN |
| 52 | 15110091 | SCONTRO A U | STRIKER | BRIDE 150 MM | ANSCHLAG | ELEMENTO DE EMPALME |
| 53 | 15211910 | BRACCIO SEGNAFILE SX | LEFT ROW MARKER ARM ASSEMBLY | GR. BRAS TRACEUR GCH | EINHEIT REIHENANREISSERARM LI | BRAZO MARCADOR DE FILAS IZQ |
| 54 | 15211930 | BRACCIO SEGNAFILE DX | RIGHT ROW MARKER ARM ASSEMBLY | GR. BRAS TRACEUR DRT | EINHEIT REIHENANREISSERARM RE | BRAZO MARCADOR DE FILAS DER |

TAV. 66/292

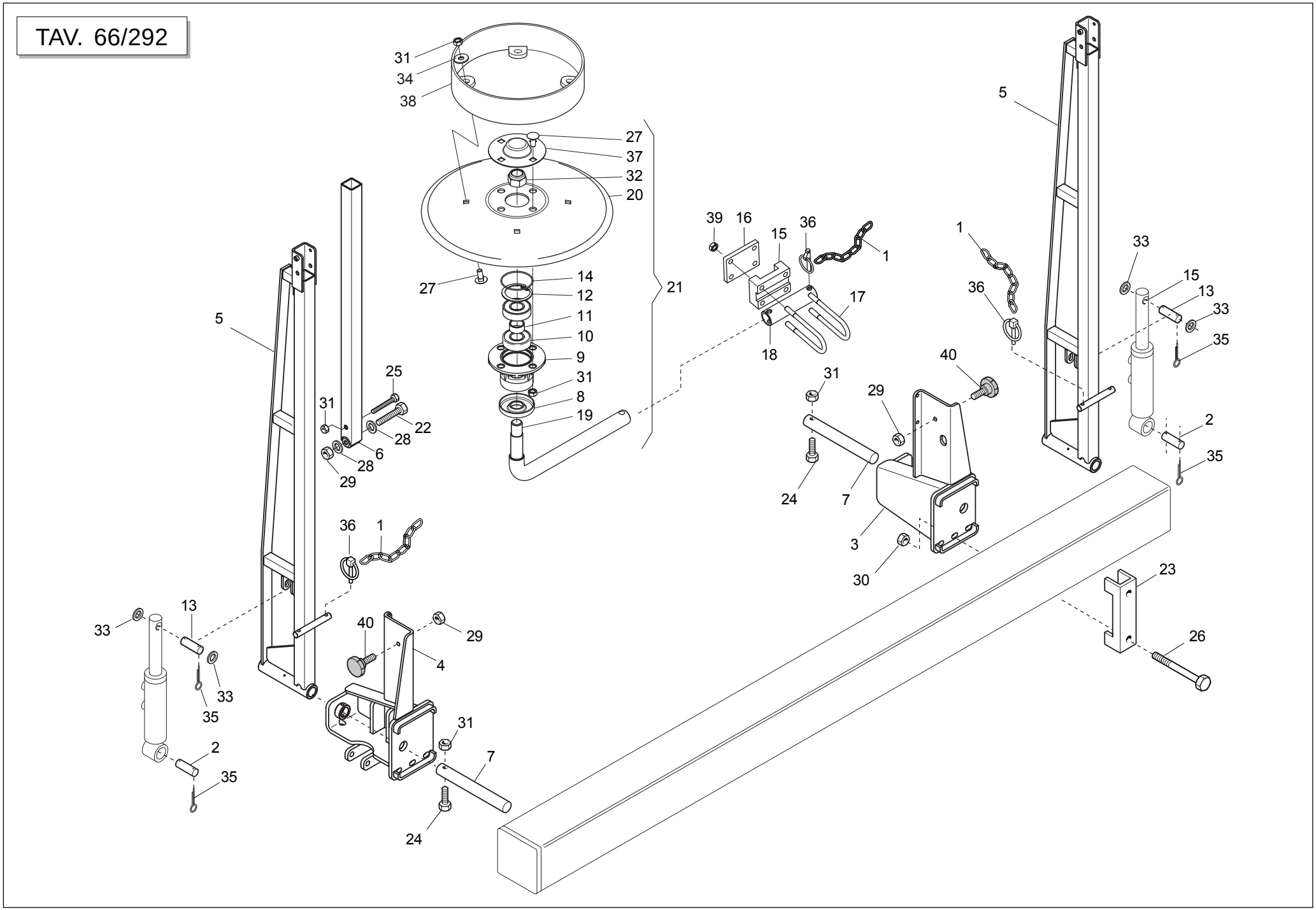




GASPARDO

## *SEGNAFILE RINFORZATO*

TAV. 66/292

| Pos. | Cod. | Descrizione | Description | Description | Benennung | Descripcion |
|---|---|---|---|---|---|---|
| 1 | 07000039 | CATENELLA | CHAIN | CHAINETTE | KETTE | CADENA |
| 2 | 15413020 | SPINA 15X120 ZN | GALVANIZED PIN 15X120 | GOUPILLE 15X120 ZN | STIFT 15X120 ZN | CLAVIJA 15X120 ZN |
| 3 | 15411381 | SUPPORTO BRACCIO DX | RIGHT ARM SUPPORT | RACLEUR GCH BAGUE | HALTERUNG ARM RE | SOPORTE BRAZO DER |
| 4 | 15411391 | SUPPORTO BRACCIO SX | LEFT ARM SUPPORT | SUPPORT BRAS GCH | HALTERUNG ARM LI | SOPORTE BRAZO IZQ |
| 5 | 15411471 | BRACCIO SEGNAFILE FRANCIA | FRENCH ROWMARKER ARM | BRAS TRACEUR | SPURREISSERARM | BRAZO MARCADOR DE FILAS |
| 6 | 16912250 | BRACCIO SEGNAFILE | ROW MARKER ARM | BRAS TRACEUR | SPURREISSERARM | BRAZO MARCADOR SURCOS |
| 7 | 14215830 | ASSE SEGNAFILE ZN | GALVAN. ROWMAKER AXLE | AXE BRAS TRACEUR ZN | REISSERASCHE | EJE MARCADOR DE FILAS |
| 8 | 19203730 | FONDELLO ZN | GALVAN. HOLDER | FOND ZN | BODENSCHEIBE ZN | FONDO ZN |
| 9 | 16610160 | SUPP.CUSCINETTI DISCO SEGN.ZN. | GALVAN. ROWMAKER DISK BEARING | SUPPORT ROULEMENTS DISQUE TRAC | SCHEIBENLAGERHALTERUNG | SOPORTE COJINETE DE DISCO MARC |
| 10 | F04010164 | CUSCINETTO 6204 2RS | BEARING 6204 2RS | ROULEMENT 6204 2RS | LAGER 6204 2RS | COJINETE 6204 2RS |
| 11 | 18801270 | BOCCOLA 21 X25 X12 ZN | BUSHING 21 X 25 X 12 ZN | BOITE 21 X25 X12 ZN | BsCHSE 21 X25 X12 ZN | CASQUILLO 21 X25 X12 ZN |
| 12 | F02050631 | ANELLO ARR.47 UNI 7437-75 | STOP RING 47 UNI 7437-75 | BAGUE ARRET 47 UNI 7437-75 | RING 47 UNI 7437-75 | ANILLO PARADA 47 UNI 7437-75 |
| 13 | 22270186 | SPINA INF.CILINDRO SEGN. SP | LOWER CYLINDR. ROWMARKER PIN S | BROCHE INF.CYLINDRE TRACEUR SP | SPURREISSER UNT. ZYLINDER STIF | CLAVIJA INF.CILINDRO MARC. FIL |
| 14 | F03010576 | GUARNIZIONE OR 2200 | O-RING 2200 | GARNITURE OR 2200 | DICHTUNG OR 2200 | JUNTA OR 2200 |
| 15 | 16912470 | SCONTRO FISS.MANICOTTO TQ.50 | STRIKER PLATE SLEEVE | BUTEE MANCHON | ANSCHLAG MUFFE | ELEMENTO DE EMPALME MANGUITO |
| 16 | 17111330 | SCONTRO 90X70 -10 4F11 66X46 | STOP TEETH 90X70 -10 4F11 66X4 | BUT+E 90X70 -10 4TROUS 11 66X4 | ANSCHLAG 90X70 -10 4F11 66X46 | DIENTE DE PARADA 90X70 -10 4F1 |
| 17 | 16912480 | CAVALLOTTO M10X46 TONDO ZN | U BOLT M10X46 ZN | CAVALIER M10X46 ZN | VERBINDUNG M10X46 ZN | PERNO EN U M10X46 ZN |
| 18 | 17111290 | MANICOTTO DISCO | DISC COUPLING SLEEVE | MANCHON DISQUE | SCHEIBENMUFFE | MANGUITO DISCO |
| 19 | 16610180 | PERNO REGGIDISCO SEGNAF. | ROWMAKER DISC-HOLDER PIN | PIVOT PORTE-DISQUE TRACEUR | SCHEIBENTRAGBOLZEN | PERNO SOPORTE DISCO MARCAFILA |
| 20 | 16610170 | DISCO SEGNAFILE D.320 | ROW MARKER DISK D.320 | DISQUE TRACEUR D320 | SPURREISSERSCHEIBE D. 320 | DISCO MARCARDOR DE FILAS O 320 |
| 21 | 16610220 | DISCO D.320 LIMITATORE COMPL | LIMITER DISK D.320 COMPL | DISQUE LIMITEUR D.320 COMPLET | BREGENZERSCHEIBE D.320 KOMP | DISCO LIMITADOR D.320 COM |
| 22 | F01020168 | VITE 12X90 5737 8.G ZN | BOLT 12X90 5737 8.G GALVANIZED | VIS 12X90 5737 8.G ZN | SCHRAUBE 12X90 5737 8.G ZN | TORNILLO 12X90 5737 8.G ZN |
| 23 | 15110091 | SCONTRO A U | STRIKER | BRIDE 150 MM | ANSCHLAG | ELEMENTO DE EMPALME |
| 24 | F01020077 | VITE 8 X60 5737 8.G ZN | BOLT 8 X60 5737 8.G GALVANIZED | VIS 8 X60 5737 8.G ZN | SCHRAUBE 8 X60 5737 8.G ZN | TORNILLO 8 X60 5737 8.G ZN |
| 25 | F01020088 | VITE 8 X90 5737 8.G ZN | BOLT 8 X90 5737 8.G GALVANIZED | VIS 8 X90 5737 8.G ZN | SCHRAUBE 8 X90 5737 8.G ZN | TORNILLO 8 X90 5737 8.G ZN |
| 26 | 41602124 | VITE 14X220 5737 8.G ZN | BOLT 14X220 5737 8.G GALVANIZ. | VIS 14X220 5737 8.G ZN | SCHRAUBE 14X220 5737 8.G ZN | TORNILLO 14X220 5737 8.G ZN |
| 27 | F01060040 | VITE 8 X20 5732 4.6 ZN | BOLT 8 X20 5732 4.6 GALVANIZED | VIS 8 X20 5732 4.6 ZN | SCHRAUBE 8 X20 5732 4.6 ZN | TORNILLO 8 X20 5732 4.6 ZN |
| 28 | F01410076 | RONDELLA D12 UNI 6592 ZN | WASHER D12 UNI 6592 ZN | RONDELLE D12 UNI 6592 ZN | UNTERLEGSCHEIBE D12 UNI 6592 Z | ARANDELA D12 UNI 6592 ZN |
| 29 | F01200293 | DADO 12 5588 6.8 ZN | NUT 12 UNI 5588 6.8 GALVANIZED | ECROU 12 UNI 5588 6.8 ZN | MUTTER 12 UNI 5588 6.8 ZN | TUERCA 12 UNI 5588 6.8 ZN |
| 30 | F01200306 | DADO 14 5588 6.8 ZN | NUT 14 UNI 5588 6.8 GALVANIZED | ECROU 14 UNI 5588 6.8 ZN | MUTTER 14 UNI 5588 6.8 ZN | TUERCA 14 UNI 5588 6.8 ZN |
| 31 | F01200244 | DADO 8 5588 6.8 ZN | NUT 8 UNI 5588 6.8 GALVANIZED | ECROU 8 UNI 5588 6.8 ZN | MUTTER 8 UNI 5588 6.8 ZN | TUERCA 8 UNI 5588 6.8 ZN |
| 32 | F01230098 | DADO AUTOB.NOR.18 ZN | NORMAL SELF-LOCKING NUT 18 GAL | ECROU AUTOB. NOR. 18 ZN | MUTTER AUTOB.NOR.18 ZN | TUERCA AUTOB. NOR.18 ZN |
| 33 | F01410088 | RONDELLA D14 UNI 6592 ZN | WASHER D14 UNI 6592 GALVANIZED | RONDELLE D14 UNI 6592 ZN | UNTERLEGSCHEIBE D14 UNI 6592 Z | ARANDELA D14 UNI 6592 ZN |
| 34 | F01420048 | ROND.PIANA 9X 24X2 6593 ZN | FLAT WASHER 9X 24X2 6593 GALV. | ROND. PLATE 9X 24X2 6593 ZN | SCHEIBE 9X 24X2 6593 ZN | ARAND. PLANA 9X 24X2 6593 ZN |
| 35 | F02200227 | COPIGLIA 5 X30 1336 ZN | SPLIT PIN 5 X30 1336 GALVAN. | GOUPILLE 5 X30 1336 ZN | SPLINT 5 X30 1336 ZN | PASADOR 5 X30 1336 ZN |
| 36 | F02200507 | SPINA A SCATTO D 9 B/83 | SNAP PIN D 9 B/83 | FICHE A DETENTE D. 9 B/83 | EINRASTSTIFT D 9 B/83 | CLAVIJA DE MUELLE D 9 B/83 |
| 37 | 16610190 | CHIUSURA CUSCINETTO ZN | GALVAN. BEARING CLOSURE | FERMETURE ROULEMENT ZN | LAGERVERSCHLUSS ZN | CIERRE COJINETE ZN |
| 38 | 16610210 | ASS.LIMITATORE PROFONDITA' | LIMITER DEPTH COUPLYNG | GR. ASS. LIMITEUR DE PROFONDEU | TIEFENBEGRENZERKOMPLEX | CONJ. LIMITADOR DE PROFUNDIDAD |
| 39 | F01200270 | DADO 10 5588 6.8 ZN | SCREW 10 UNI 5588 6.8 GALVANIZ | ECROU 10 UNI 5588 6.8 ZN | MUTTER 10 UNI 5588 6.8 ZN | TUERCA 10 UNI 5588 6.8 ZN |
| 40 | F05150459 | PARACOLPI CIL.75X25 M12 781103 | RUBBER BUFFER- CYLINDR. 75X25 | PARE-CHOCS CYL. 75X25 M12 7811 | PUFFER ZYL.75X25 M12 781103 | PARAGOLPES CIL.75X25 M12 78110 |

TAV. 66/42

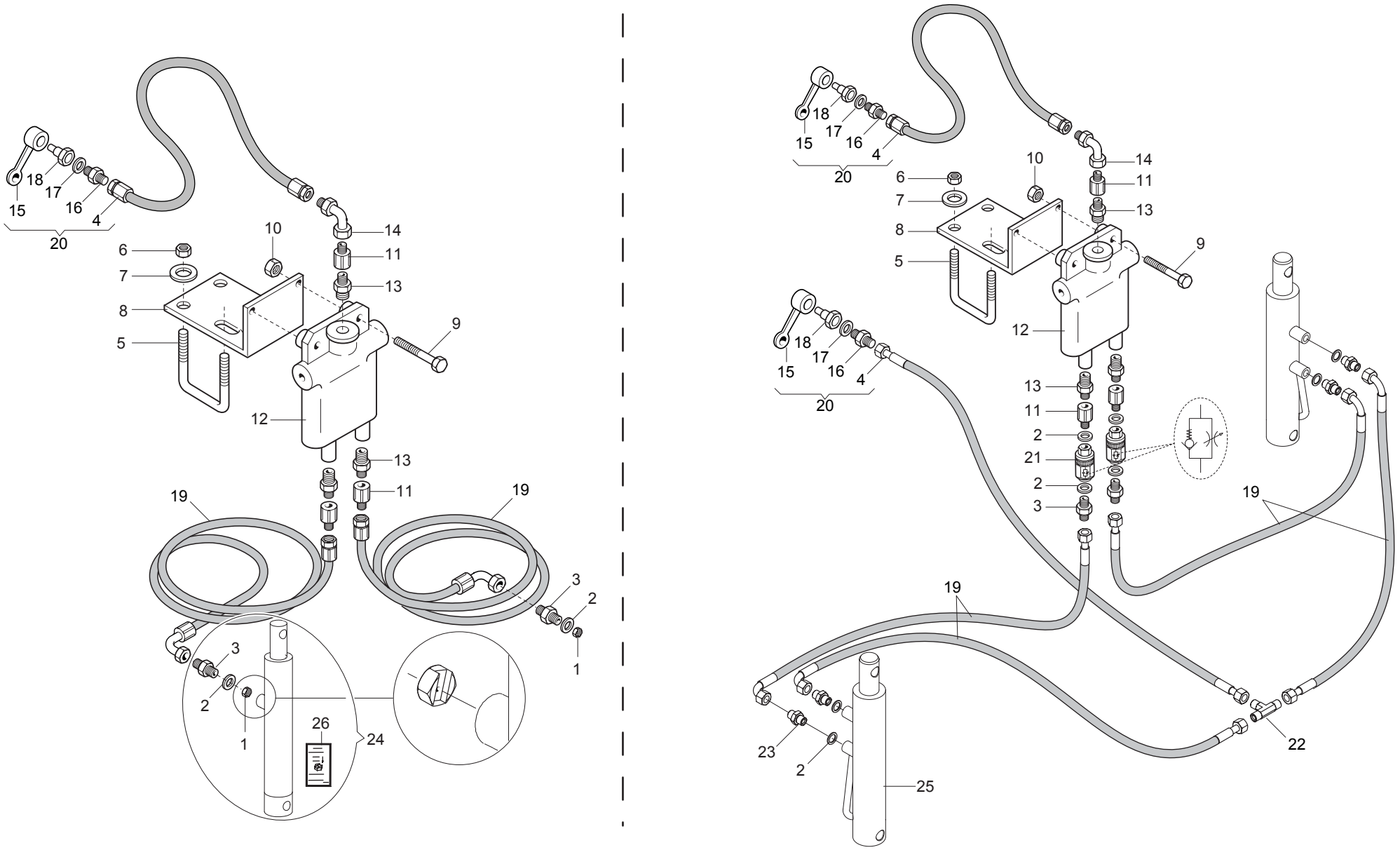




GASPARDO

## *IMPIANTO OLEODINAMICO SEGNAFILE*

TAV. 66/42

| Pos. | Cod. | Descrizione | Description | Description | Benennung | Descripcion |
|---|---|---|---|---|---|---|
| 1 | 15413050 | STROZZATORE A PASTIGLIA D.0,8 | PAD VENTURI D.0,8 | ETRANGLEUR D.0,8 | DROSSEL D.0,8 | ESTRANGULADOR D.0,8 |
| 2 | F03151238 | RONDELLA RAME 1/4 | 1/4 COPPER WASHER | RONDELLE CUIVRE ª | UNTERLEGSCHEIBE KUPFER 1/4 | ARANDELA COBRE 1/4 |
| 3 | F03150266 | NIPPLO MASCH.CIL.1/4 ZN | NIPPLE GALV.CYLINDR.MALE 1/4 | NIPPLE MALE CYL. 1/4 ZN | NIPPELZYL.1/4 ZN | NIPLE MACHO CIL.1/4 ZN |
| 4 | 22270463 | TUB.TR.1/4R2 F-F 1/4 L1500 LM | TUBE TR.1/4R2 F-F1/4 L1500 LM | TUB.TR.1/4R2 F-F 1/4 L1500 LM | ROHR1/4R2 F-F 1/4 L1500 LM | TUB.TR.1/4R2 F-F 1/4 L1500 LM |
| 5 | 15111050 | CAVALLOTTO M14X96 - 119 ZN | U-BOLT M14X96 - 119 ZN | CAVALIER M14X96 - 119 ZN | VERBINDUNG M14X96 - 119 ZN | PERNO EN U M14X96 - 119 ZN |
| 6 | F01200306 | DADO 14 5588 6.8 ZN | NUT 14 UNI 5588 6.8 GALVANIZED | ECROU 14 UNI 5588 6.8 ZN | MUTTER 14 UNI 5588 6.8 ZN | TUERCA 14 UNI 5588 6.8 ZN |
| 7 | 18700690 | RONDELLA 15 X40 X6 ZN | WASHER 15 X 40 X 6 ZN | RONDELLE 15 X40 X6 ZN | UNTERLEGSCHEIBE 15 X40 X6 ZN | ARANDELA 15 X40 X6 ZN |
| 8 | 15412350 | SUPPORTO VALVOLA SEGNAFILE | ROWMARKER VALVE SUPPORT | SUPPORT SOUPAPE TRACEUR | VENTILHALTERUNG SPURREISSER | SOPORTE VæLVULA MARC. DE FILAS |
| 9 | F01020068 | VITE 8 X40 5737 8.G ZN | BOLT 8 X40 5737 8.G GALVANIZED | VIS 8 X40 5737 8.G ZN | SCHRAUBE 8 X40 5737 8.G ZN | TORNILLO 8 X40 5737 8.G ZN |
| 10 | F01200244 | DADO 8 5588 6.8 ZN | NUT 8 UNI 5588 6.8 GALVANIZED | ECROU 8 UNI 5588 6.8 ZN | MUTTER 8 UNI 5588 6.8 ZN | TUERCA 8 UNI 5588 6.8 ZN |
| 11 | F03151194 | PROLUNGA CORTA 036 1/4 | SHORT EXTENSION 036 1/4 | RALLONGE COURTE 036 1/4 | KURZE VERLZNGERUNG 036 1/4 | PROLONG. CORTA 036 1/4 |
| 12 | 67007430 | VALVOLA SEGNAFILE C.SQV > | ROW MARKER VALVE ATI C128513 | SOUPAPE TRACEUR C.SQV | VENTIL SPURREISSER ATI C128513 | VæLVULA MARCAFILAS ATI C128513 |
| 13 | F03150122 | NIPPLO 3/4 JIC OR - 1/4 | NIPPLE- 3/4 JIC OR - 1/4 | NIPPLE 3/4 JIC OR - 1/4 | NIPPEL 3/4 JIC OR - 1/4 | NIPLE 3/4 JIC OR - 1/4 |
| 14 | F03150859 | CURVA 90° F.GIREV.1/4 - M.1/4 | ELBOW 90[ F. SWIVEL 1/4 -M.1/4 | COUDE 90[ F.TOURN.1/4 - M.1/4 | KNIESTsCK 90[ F.DREHB.1/4 - M. | CURVA 90 F.GIRAT..1/4 - M.1/4C |
| 15 | F05150325 | CAPPUCCIO INNESTO 1/2 | CONNECTION CAP NUT 1/2 | CAPUCHON ACCOUPLEMENT 1/2 | HAUBE KUPPLUNG 1/2 | CAPUCHON ACOPLAMIENTO 1/2 |
| 16 | F03150211 | NIPPLO MASCH.CIL.1/2-1/4 ZN | NIPPLE- GALVAN. CYLINDR.MALE- | NIPPLE MALE CYL. 1/2-1/4 ZN | NIPPELZYL.1/2-1/4 ZN | NIPLE MACHO CIL.1/2-1/4 ZN |
| 17 | F03151237 | RONDELLA RAME 1/2 | 1/2 COPPER WASHER | RONDELLE CUIVRE ® | UNTERLEGSCHEIBE KUPFER 1/2 | ARANDELA COBRE 1/2 |
| 18 | F03150935 | INNESTO RAPIDO MASCH.CONO 1/2 | QUICK CONNECT MALE CONE 1/2 CO | CONNEXION RAPIDE MALE CONE 1/2 | SCHNELLKUPPLUNG GEWINDE KONISC | ACOPLAMIENTO RæPIDO MACHO CONO |
| 19 | 23440517 | TUBO 1/4R2 C-F 1/4 L2000 HL/ID | PIPE 1/4R1 C-F 1/4 L2000 HL/ID | TUBE 1/4R1 C-F 1/4 L2000 HL/ID | ROHR 1/4R1 C-F 1/4 L2000 HL/ID | TUBO 1/4R1 C-F 1/4 L2000 HL/ID |
| 19 | 22505140 | TUBO 1/4R2 C-F 1/4 L.2350 LM | PIPE 1/4R1 C-F 1/4 L.2350 LM | TUBE 1/4R1 C-F 1/4 L. 2350 LM | ROHR 1/4R1 C-F 1/4 L.2350 LM | TUBO 1/4R1 C-F 1/4 L.2350 LM |
| 19 | 22505141 | TUBO 1/4R2 C-F L.2750 LM | PIPE 1/4R1 C-F L.2750 LM | TUBE 1/4R1 C-F L. 2750 LM | ROHR 1/4R1 C-F L.2750 LM | TUBO 1/4R1 C-F L.2750 LM |
| 19 | 15210950 | TUBO 1/4 R2 C-F 1/4 L.3150 | PIPE 1/4-R2 C-F 1/4 M.3-15 | TUBE 1/4-R2 C-F 1/4 M.3-15 | ROHR 1/4-R2 C-F 1/4 M.3-15 | TUBO 1/4-R2 C-F 1/4 M.3-15 |
| 19 | 22505143 | TUBO 1/4R2 C-F 1/4 L.3500 LM | PIPE 1/4R1 C-F 1/4 L.3500 LM | TUBE 1/4R1 C-F 1/4 L. 3500 LM | ROHR 1/4R1 C-F 1/4 L.3500 LM | TUBO 1/4R1 C-F 1/4 L.3500 LM |
| 19 | 15413060 | TUBO 1/4R2 CF1/4- F1/4 3850 | TUBE 1/4R2 CF1/4-F1/4 3850 | TUYAU 1/4R2 CF1/4-F1/4 3850 | SCHLAUCH 1/4R2 CF1/4-F1/4 3850 | TUBO 1/4R2 CF1/4-F1/4 3850 |
| 19 | 16012650 | TUBO R2 1/4 C-F L.4000 | PIPE 1/4 R2 C-F 1/4 L.4000 | TUBE 1/4 R2 C-F 1/4 L. 4000 | ROHR 1/4 R2 C-F 1/4 L 4000 | TUBO 1/4 R2 C-F 1/4 L.4000 |
| 19 | 15413070 | TUBO 1/4R2 CF1/4- F1/4 4250 | TUBE 1/4R2 CF1/4-F1/4 4250 | TUYAU 1/4R2 CF1/4-F1/4 4250 | SCHLAUCH 1/4R2 CF1/4-F1/4 4250 | TUBO 1/4R2 CF1/4-F1/4 4250 |
| 19 | 15413080 | TUBO 1/4 C-F L.4650 | TUBE 1/4 C-F L.4650 | TUBE 1/4 C-F L.4650 | ROHR 1/4 C-F L.4650 | TUBO 1/4 C-F L.4650 |
| 20 | 13811211 | TUBO X COLLEG. AL TRATTORE | PIPE FOR CONNECTION TO TRACTOR | TUBE POUR CONN. AU TRACTEUR | ROHR F. KUPPLUNG AM SCHLEPPER | TUBO P/CONEXIN AL TRACTOR T |
| 21 | F03151226 | VALVOLA VRF 1/4' GAS | 1/4' GAS VALVE VRF | SOUPAPE REG DEBIT VRF 1/4" GAZ | VENITL VRF 1/4' GAS | VæLVULA VRF 1/4' GAS |
| 22 | F03151219 | RACCORDO -T- MASCHIO 1/4 ZINC. | MALE T-UNION 1/4 ZINC. | RACCORD -T- MALE 1/4 ZING. | ANSCHLUSSTsCK -T- GEWINDE 1/4 | UNIN -T- MACHO 1/4 CINC. R |
| 23 | 16011690 | MONT.NIPPLO 1/4 GRANO F.1,0 | UPRIGHT 1/4" NIPPLE WITH GRUB | MONTANT NIPPLE 1/4 AVEC GRAIN | STZNDER NIPPEL 1/4 MIT STIFT 8 | MONT.NIPLE 1/4 TORNIL.SIN CABE |
| 24 | 15413110 | CILINDRO SEGNAFILE SP COMPL. | ROW MARKER CYLINDER SP | CYLINDRE TRACEUR SP | SYLINDER REIHENANREISSER SP | CILINDRO MARCADOR DE FILAS |
| 25 | 16610140 | CILINDRO DE 30X40 -155 | CYLINDER D.E.30-40/155 | CYLINDRE D.E. 30-40/155 | ZYLINDER D.E.30-40/155 | CILINDRO D.E. 30-40/155 |
| 26 | 19702710 | DECAL.POSIZIONE STROZZATORE | VENTURI POSITION STICKER | DECALCOM POSITION TAQUET | ABZIEHBILD POSIZION DROSSELSTE | CALCOMAN-A. POSICIËN ESTRANGUL |

TAV. 66/52

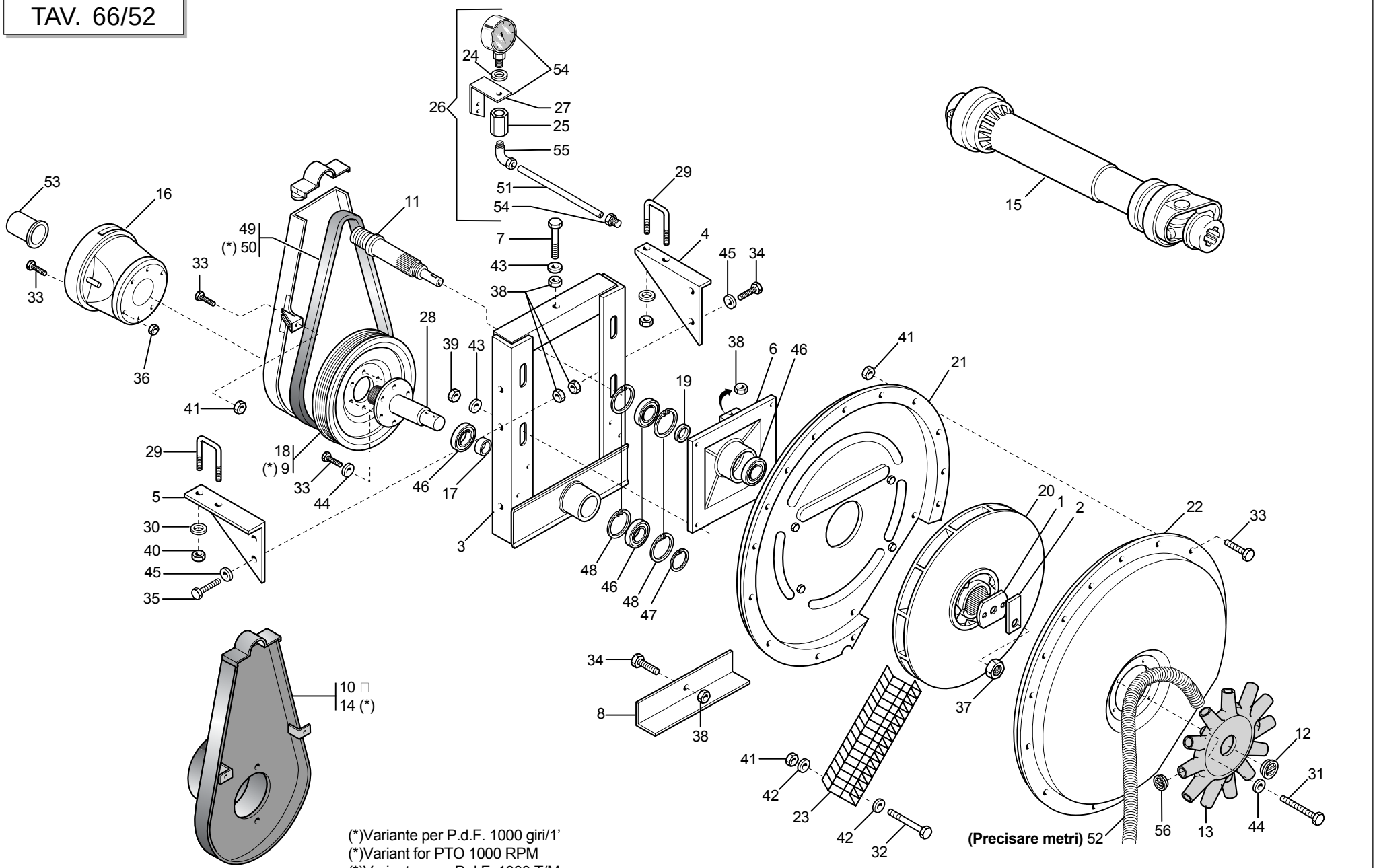


(*)Variante per P.d.F. 1000 giri/1'
(*)Variant for PTO 1000 RPM
(*)Variante pour P.d.F. 1000 T/M
(*)Variante zur leistungsabn,1000UPM
(*)Variante pera P.d.F. 1000 RPM

## *DEPRESSORE*

TAV. 66/52

| Pos. | Cod. | Descrizione | Description | Description | Benennung | Descripcion |
|---|---|---|---|---|---|---|
| 1 | 13912050 | RONDELLA DI FERMO | STOP WASHER | RONDELLE DE BLOCAGE | FESTSTELLSCHEIBE | ARANDELLA DE BLOQUEO |
| 2 | 13912060 | PIASTRINA DI TENUTA | STOP PLATE | PLAQUETTE DE TENUE | DICHTPLZTTCHEN | PLACA DE RETENCIN P |
| 3 | 15450041 | INCASTELLATURA DEPRESSORE SP | CASING VACUUM PUMP SP | BATI DISPOSITIF DE DEPRESSION | GESTELL VAKUUMPUMPE SP | BASTIDOR BOMBA DE VACO SP C |
| 4 | 15450050 | SUPPORTO DX | RIGHT SUPPORT | SUPPORT DRT | HALTERUNG RE | SOPORTE DER |
| 5 | 15450060 | SUPPORTO SX | LEFT SUPPORT | SUPPORT GCH | HALTERUNG LI | SOPORTE IZQ |
| 6 | 15450091 | SUPPORTO PULEGGIA CONDOTTA | DRIVEN PULLEY SUPPORT | SUPPORT POULIE ENTRAINEE | HALTERUNG GETRIEBENE RIEMENSCH | SOPORTE POLEA CONDUCIDA |
| 7 | 15450270 | VITE 10X130 8.8 FIL.60 ZN | GALVANIZ. SCREW 10X130 8.8 FIL | VIS 10X130 8.8 FIL.60 ZN | SCHRAUBE 10X130 8.8 GEW.60 ZN | TORNILLO 10X130 8.8 FIL.60 ZN |
| 8 | 15450280 | PROTEZIONE DEPRESSORE | VACUUM PUMP PROTECTION | PROTECTION DEPRESSEUR | SCHUTZ VAKUUMPUMPE | PROTECCIN BOMBA DE VACO PR |
| 9 | 15450310 | PULEGGIA MOTRICE 1000 GIRI | DRIVING PULLEY 1000 REVS | POULIE MOTRICE 1000T | ANTRIEBSSCHEIBE 1000 UMDREHUNG | POLEA MOTRIZ 1000 REVOLUCIONES |
| 10 | 15450341 | PROTEZ.CINGHIA DEPRES.COMPLETO | VACUUM PUMP BELT GUARD COMPL. | PROTECT.COURROIE DEPRESS.COMPL | SCHUTZ RIEMEN VAK.PUMPE KOMPL | PROT.CORREA B.VACO COMPLETA P |
| 11 | 15450390 | PULEGGIA CONDOTTA | DRIVEN PULLEY D.28 | POULIE ENTRAINEE D. 28 | GETRIEBENE SCHEIBE D.28 | POLEA CONDUCIDA D.28 |
| 12 | F03150722 | TAPPO 700 M52X2 | M52 X 2 PLUG | BOUCHON M52 X 2 | PFROPFEN M52 X 2 | TAPN M52 X 2 D |
| 13 | 19004480 | CONVOGLIATORE 12 USCITE | CONVEYOR 12 OUTLETS | CONVOYEUR 12 SORTIES | TRICHTER MIT 12 AUSG-NGEN | TRANSPORTADOR 12 SALIDAS |
| 14 | 15450500 | PROTEZIONE CINGHIA 1000 GIRI | BELT GUARD 1000 RPM | PROTECTION COURROIE 1000 TOURS | RIEMENSCHUTZ 1000 UMDR. | PROTECCIN CORREA 1000 REV. P |
| 15 | F08011711 | CARD.B1 Z6-Z6 L700 | UNIVERSAL JOINT S10 0700F 112 | CARD NORM S10 0700F1121121CAT | KARDAN S10 0700F 112 112 1CAT | CARDæN S10 0700F 112 112 1CAT |
| 16 | 21010037 | CUFFIA PROTEZIONE P.DI P. | POWER TAKE-OFF PROTECTION HOUS | PROTECTEUR PRISE DE PUISSANCE | SCHUTZKASTEN KRAFTABTRIEB | ENVOLTURA PROTECCIN T. DE P. G |
| 17 | 22230010 | DISTANZIALE CUSCINETTI | BEARING SPACER | ENTRETOISE PALIERS | DISTANZSTsCK LAGER | DISTANCIADOR COJINETES |
| 18 | 22230012 | PULEGGIA MOTRICE | DRIVING PULLEY | POULIE MOTRICE 540T | ANTRIEBSSCHEIBE | POLEA MOTRIZ |
| 19 | 22230014 | DISTANZIALE | SPACER | ENTRETOISE | DISTANZSTsCK | DISTANCIADOR |
| 20 | 22230015 | GIRANTE | IMPELLER | ROUE TURBINE | LAUFRAD | RODETE |
| 21 | 22230018 | INVOLUCRO ANTERIORE | INVOLUCRO ANTERIORE | INVOLUCRO ANTERIORE | INVOLUCRO ANTERIORE | INVOLUCRO ANTERIORE |
| 22 | 22230019 | INVOLUCRO POSTERIORE | INVOLUCRO POSTERIORE | INVOLUCRO POSTERIORE | INVOLUCRO POSTERIORE | INVOLUCRO POSTERIORE |
| 23 | 10150291 | GRIGLIA PROTEZIONE ZN | AIR PUMP PROTECT. GRID | GRILLE DE PROTECT.DISP. DEPRES | SCHUTZGITTER VAKUUMPUMPE | REJILLA DE PROTECCIN BOMBA VAG |
| 24 | F05150479 | ROND.APPOGGIO MANOMETRI SV | PRESSURE GAUGE REST WASHER | ROND. LOGEMENT MANOMETRES SV | STsTZSCHEIBE MANOMETER SV | ARAND. SOPORTE MANOMETROS SV |
| 25 | 22250274 | COLLEGAMENTO MANOMETRI SP-SV | PRESSURE GAUGE CONNECT. SP-SV | RACCORD MANOMETRES SP-SV | VERBINDUNG MANOMETER SP-SV | CONEXIN MANMETROS SP-SV LE |
| 26 | 22270093 | VACUOMETRO COMPL. SP LM | VACUUM METER ASSY. SP LM | VACUOMETRE COMPL. SP LM | KOMPL. VAKUUMMETER SP LM | VACUMETRO COMPL. SP LM V |
| 27 | 22270134 | SUPPORTO VACUOMETRO SP | VACUUM METER SUPPORT SP | SUPPORT VACUOMETRE SP | HALTERUNG VAKUUMMETER SP | SOPORTE VACUMETRO SP S |
| 28 | 22270369 | P.DI P.CON CODOLO | POWER TAKE-OFF- W/ SPIGOT | PRISE DE FORCE AVEC CONE | KRAFTABTRIEB MIT ENDSTsCK | TOMA DE FUERZA CON MANGO |
| 29 | 15111050 | CAVALLOTTO M14X96 - 119 ZN | U-BOLT M14X96 - 119 ZN | CAVALIER M14X96 - 119 ZN | VERBINDUNG M14X96 - 119 ZN | PERNO EN U M14X96 - 119 ZN |
| 30 | 18700690 | RONDELLA 15 X40 X6 ZN | WASHER 15 X 40 X 6 ZN | RONDELLE 15 X40 X6 ZN | UNTERLEGSCHEIBE 15 X40 X6 ZN | ARANDELA 15 X40 X6 ZN |
| 31 | F01020047 | VITE 6 X70 5737 8.G ZN | BOLT 6 X70 5737 8.G GALVANIZED | VIS 6 X70 5737 8.G ZN | SCHRAUBE 6 X70 5737 8.G ZN | TORNILLO 6 X70 5737 8.G ZN |
| 32 | F01020050 | VITE 6 X80 5737 8.G ZN | BOLT 6 X80 5737 8.G GALVANIZED | VIS 6 X80 5737 8.G ZN | SCHRAUBE 6 X80 5737 8.G ZN | TORNILLO 6 X80 5737 8.G ZN |
| 33 | F01020403 | VITE 6 X16 5739 8.G ZN | BOLT 6X16 5739 8.G GALVANIZED | VIS 6X16 5739 8.G ZN | SCHRAUBE 6X16 5739 8.G ZN | TORNILLO 6X16 5739 8.G ZN |
| 34 | F01020472 | VITE 10X25 5739 8.G ZN | BOLT 10X25 5739 8.G GALVANIZED | VIS 10X25 5739 8.G ZN | SCHRAUBE 10X25 5739 8.G ZN | TORNILLO 10X25 5739 8.G ZN |
| 35 | F01020479 | VITE 10X35 5739 8.G ZN | BOLT 10X35 5739 8.G GALVANIZED | VIS 10X35 5739 8.G ZN | SCHRAUBE 10X35 5739 8.G ZN | TORNILLO 10X35 5739 8.G ZN |
| 36 | F01230022 | DADO AUTOB.NOR.6 ZN | NORM.SELF-LOCKING NUT 6 GALVAN | ECROU AUTOB.NOR.6 ZN | SELBSTSP. MUTTER NOR.6 ZN | TUERCA AUTOB. NOR. 6 ZN |
| 37 | F01230143 | DADO AUTOB.NOR.24X2 ZN | NORMAL SELF-LOCK.NUT 24X2 GAL | ECROU AUTOB. NOR. 24X2 ZN | MUTTER AUTOB.NOR.24X2 ZN | TUERCA AUTOB. NOR.24X2 ZN |
| 38 | F01200270 | DADO 10 5588 6.8 ZN | SCREW 10 UNI 5588 6.8 GALVANIZ | ECROU 10 UNI 5588 6.8 ZN | MUTTER 10 UNI 5588 6.8 ZN | TUERCA 10 UNI 5588 6.8 ZN |
| 39 | F01200293 | DADO 12 5588 6.8 ZN | NUT 12 UNI 5588 6.8 GALVANIZED | ECROU 12 UNI 5588 6.8 ZN | MUTTER 12 UNI 5588 6.8 ZN | TUERCA 12 UNI 5588 6.8 ZN |
| 40 | F01200306 | DADO 14 5588 6.8 ZN | NUT 14 UNI 5588 6.8 GALVANIZED | ECROU 14 UNI 5588 6.8 ZN | MUTTER 14 UNI 5588 6.8 ZN | TUERCA 14 UNI 5588 6.8 ZN |
| 41 | F01220211 | DADO TRISTOP M 6 | NUT- TRISTOP M 6 | ECROU TRISTOP M 6 | MUTTER TRISTOP M 6 | TUERCA TRISTOP M 6 |
| 42 | F01420036 | ROND.PIANA 6,6X 18X2 6593 ZN | FLAT WASHER 6-6X 18X2 6593 ZN | ROND. PLATE 6-6X 18X2 6593 ZN | SCHEIBE 6-6X 18X2 6593 ZN | ARAND. PLANA 6-6X 18X2 6593 ZN |
| 43 | F01420084 | RONDELLA 14 X36 X3 ZN | GALVANIZED WASHER 14 X36 X3 | RONDELLE 14 X36 X3 ZN | UNTERLEGSCHEIBE 14 X36 X3 ZN | ARANDELA 14 X36 X3 ZN |
| 44 | F01430047 | RONDELLA D6 DIN 6798 D.INT.ZN | WASHER D6 DIN 6798 D.INT.GALV. | RONDELLE D6 DIN 6798 D. INT. Z | UNT. SCHEIBE D6 DIN 6798 D. IN | ARANDELA D6 DIN 6798 D.INT.ZN |
| 45 | F01430023 | RONDELLA D10 DIN 6798 D.INT.ZN | WASHER D10 DIN 6798 D.INT.ZN | RONDELLE D10 DIN 6798 D. INT. | UNT. SCHEIBE D10 DIN 6798 D.IN | ARANDELA D10 DIN 6798 D.INT.ZN |
| 46 | F04010215 | CUSCINETTO 6306 2RS C3 | BEARING 6306 2RS C3 | PALIER 6306 2RS C3 | LAGER 6306 2RS C3 | COJINETE 6306 2RS C3 |
| 47 | F02050617 | ANELLO ARR.30 UNI 7435-75 | STOP RING 30 UNI 7435-75 | BAGUE ARRET 30 UNI 7435-75 | RING 30 UNI 7435-75 | ANILLO PARADA 30 UNI 7435-75 |
| 48 | F02050641 | ANELLO ARR.72 UNI 7437-75 | STOP RING 72 UNI 7437-75 | BAGUE ARRET 72 UNI 7437-75 | RING 72 UNI 7437-75 | ANILLO PARADA 72 UNI 7437-75 |
| 49 | F06010160 | CINGHIA POLY V 1287 J-16 GOLE | BELT- POLY V 1287 J-16 GOLE | COURROIE POLY V 1287 J-16 CANN | RIEMEN POLY V 1287 J-16 RILLEN | CORREA POLY V 1287 J-16 GARGAN |
| 50 | F06010161 | CINGHIA POLY-V 1016 J-16 GOLE | BELT- POLY V 1016 J-16 GOLE | COURROIE POLY-V 1016 J-16 GORG | RIEMEN POLY-V 1016 J-16 RILLEN | CORREA POLY-V 1016 J-16 GARGA |
| 51 | F03100391 | TUBO MANOMETRO L.250 SV | PRESS. GAUGE PIPE L.250 SV | TUBE MANOMETRE L. 250 SV | ROHR MANOMETER L.250 SV | TUBO MANMETRO L.250 SV |
| 52 | F03100506 | TUBO EOLO 45 PU | EOLO PIPE 45 PU | TUBE EOLO 45 PU | ROHR EOLO 45 PU | TUBO EOLO 45 PU |
| 53 | 66248227 | CUFFIA PROTEZIONE P.D.P. | POWER TAKE-OFF PROTECTION HOUS | PROTECTEUR PRISE DE PUISSANCE | SCHUTZKASTEN KRAFTABTRIEB | ENVOLTURA PROTECCIN T. DE P. G |
| 54 | F03151257 | VACUOM.0-100 MBAR C.SMORZ.INC. | VACUUM METER 0-100 MBAR C.SMOR | VACUOMETRE 0-100 MBARS A/SUPPO | VAKUUMMETER 0-100 MBAR M. DZMP | VACUM. 0-100 MBAR C.ATEN.INC.V |
| 55 | F03151200 | RACCORDO 90° C5 1/8' 6/8 | UNION 90[ C5 1/8" 6/8 | RACCORD 90[ C5 1/8" 6/8 | ANSCHLUSSTsCK 90[ C5 1/8' 6/8 | UNIN 90 C5 1/8" 6/8 RA |
| 56 | F05050020 | TAPPO SALVAFILETTO D.39 | CONVEYOR PLUG D.39 | BOUCHON PROTEGE-FILET D. 39 | GEWINDESCHUTZPFROPFEN D.39 | TAPN GUARDARROSCA D.39 D |

TAV. 66/61

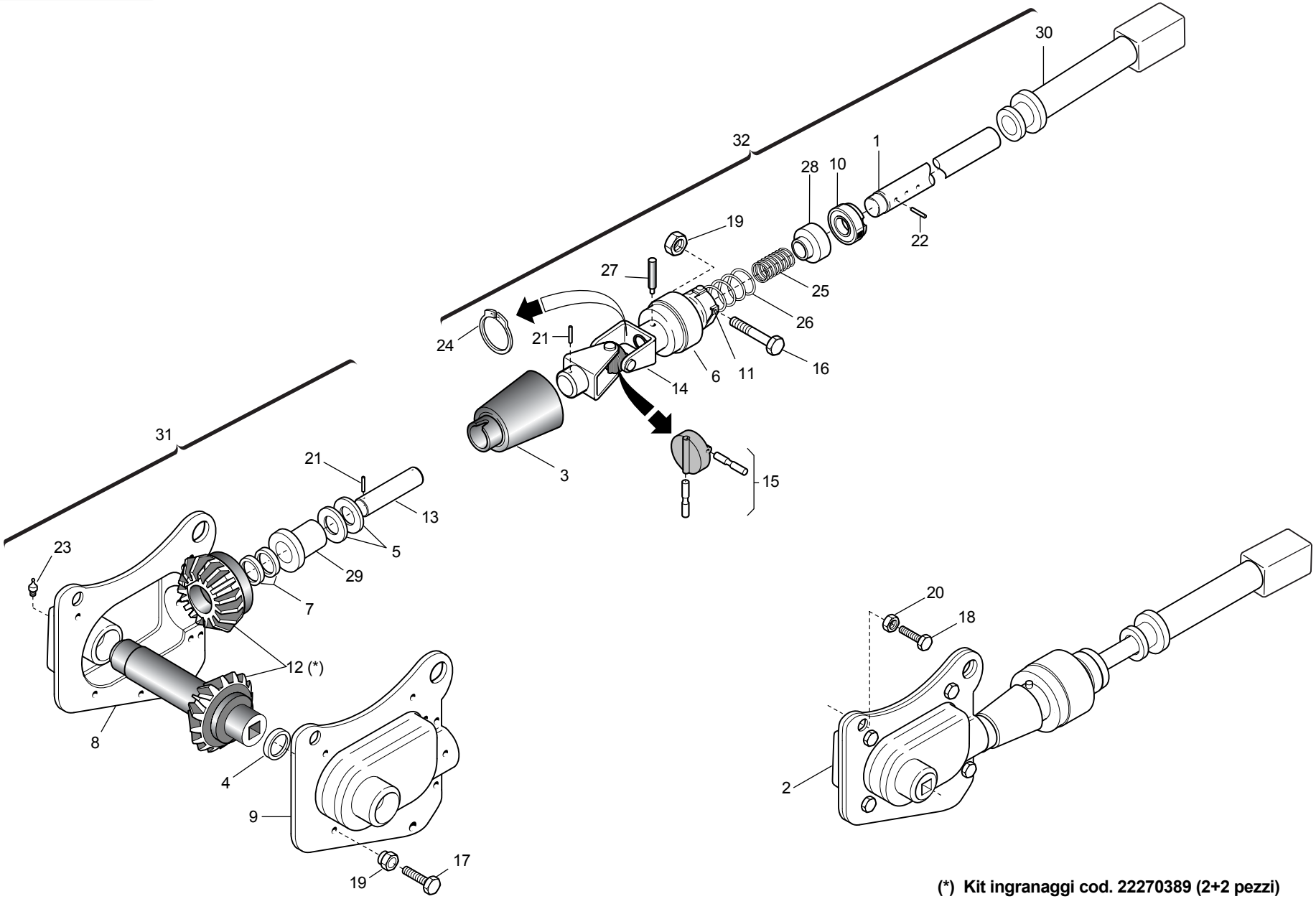


**(*) Kit ingranaggi cod. 22270389 (2+2 pezzi)**

## *SCATOLA DI RINVIO ELEMENTO*

TAV. 66/61

| Pos. | Cod. | Descrizione | Description | Description | Benennung | Descripcion |
|---|---|---|---|---|---|---|
| 1 | 15421850 | ASSE AVVISATORE | WARNING SPINDLE | AXE AVERTISSEUR | ACHSE SIGNALHUPE | EJE INDICADOR |
| 2 | 15421212 | SCATOLA RINVIO COMPL.SP530 | TRANSFER CASE ASSY. - SP530 | TRANSMISSION COMPL. - SP530 | KOMPLETTES VORGELEGEGEHZUSE -S | CAJA DE TRANSMISIN COMPL - SP5 |
| 3 | 19002840 | COPRICARDANO SUPERIORE | TOP CARDAN JOINT COVER | COUVRE-CARDAN SUPERIEUR | OBERE KARDANABDECKUNG | CUBRECARDæN SUPERIOR |
| 4 | 20970051 | RONDELLA 40X0,6X32 | WASHER 40X0-6X32 | RONDELLE 40X0-6X32 | UNTERLEGSCHEIBE 40X0-6X32 | ARANDELA 40X0-6X32 |
| 5 | 20970055 | RONDELLA 25X0,6X16,5 | WASHER 25X0-6X16-5 | RONDELLE 25X0-6X16-5 | UNTERLEGSCHEIBE 25X0-6X16-5 | ARANDELA 25X0-6X16-5 |
| 6 | 22220071 | AVVISATORE ACUSTICO | HOOTER | SIGNALISATION ACOUSTIQUE | HUPE | INDICADOR ACSTICO A |
| 7 | 22220073 | RONDELLA 28X0,3X16,5 | WASHER 28X0-3X16-5 | RONDELLE 28X0-3X16-5 | UNTERLEGSCHEIBE 28X0-3X16-5 | ARANDELA 28X0-3X16-5 |
| 8 | 22220102 | CONCHIGLIA DX | RIGHT SHELL | COQUILLE DRT. | SCHALE RECHTS | MOLDE DER. |
| 9 | 22220103 | CONCHIGLIA SX | LEFT SHELL | COQUILLE GCH. | SCHALE LINKS | MOLDE IZQ. |
| 10 | 22220105 | BOCCOLA DI SPINTA | THRUST BUSHING | BOITE DE POUSSEE | SCHUBBsCHSE | CASQUILLO DE APRIETE |
| 11 | 22220155 | ELEM.TENUTA MOLLE COMP. | SPRING SEAL ELEMENT ASSY. | ELEMENT D'ETANCHEITE RESSORTS | DICHTUNGSELEMENT FEDERN KOMP. | ELEM. RESISTENCIA MUELLES COMP |
| 12 | 22270389 | 2+2 INGR.SCATOLA DI RINVIO > | 2+2 INTERM. TRANSM. GEAR BOX | COUPLE CON RENV ANGLE (2+2) | 2+2 ZAHNRZDER VORGELEGEGEHZUSE | 2+2 ENGRANAJES CAJA DE LA TRAN |
| 13 | 22270452 | ALBERO SCATOLA RINVIO SP/S | INTERMEDIATE BOX SHAFT | ARBRE TRANSMISSION SP/S | WELLE VORGELEGEGEHZUSE SP/S | æRBOL CAJA DE TRANSMISIN SP/SA |
| 14 | 22270453 | SNODO AVVISATORE SP/S | SIGNALLER ARTICULATION SP/S | ARTICULATION SIGNALISATION SP/ | HUPGELENK SP/S | ARTICULACIN AVISADOR SP/S A |
| 15 | 22270454 | CROCIERA COMPL. SP/S | SPIDER SP/S | CROSILLON COMPL CARDAN TRANSM | GELENKKREUZ KOMPL. SP/S | CRUCETA COMPL. SP/S |
| 16 | F01020041 | VITE 6 X45 5737 8.G ZN | BOLT 6 X45 5737 8.G GALVANIZED | VIS 6 X45 5737 8.G ZN | SCHRAUBE 6 X45 5737 8.G ZN | TORNILLO 6 X45 5737 8.G ZN |
| 17 | F01020403 | VITE 6 X16 5739 8.G ZN | BOLT 6X16 5739 8.G GALVANIZED | VIS 6X16 5739 8.G ZN | SCHRAUBE 6X16 5739 8.G ZN | TORNILLO 6X16 5739 8.G ZN |
| 18 | F01020440 | VITE 8 X25 5739 8.G ZN | BOLT 8X25 5739 8.G GALVANIZED | VIS 8X25 5739 8.G ZN | SCHRAUBE 8X25 5739 8.G ZN | TORNILLO 8X25 5739 8.G ZN |
| 19 | F01220211 | DADO TRISTOP M 6 | NUT- TRISTOP M 6 | ECROU TRISTOP M 6 | MUTTER TRISTOP M 6 | TUERCA TRISTOP M 6 |
| 20 | F01220222 | DADO TRISTOP M 8 | NUT- TRISTOP M 8 | ECROU TRISTOP M 8 | MUTTER TRISTOP M 8 | TUERCA TRISTOP M 8 |
| 21 | F02100114 | SPINA EL.6 X30 DIN 1481 | PIN EL. 6 X30 DIN 1481 | FICHE EL. 6 X30 DIN 1481 | SPANNSTIFT 6 X30 DIN 1481 | CLAVIJA EL.6 X30 DIN 1481 |
| 22 | F02100121 | SPINA EL.6 X40 DIN 1481 | PIN EL. 6 X40 DIN 1481 | FICHE EL. 6 X40 DIN 1481 | SPANNSTIFT 6 X40 DIN 1481 | CLAVIJA EL.6 X40 DIN 1481 |
| 23 | F01100011 | INGRASS.A SFERE M6X1/A | SPHERE NIPPLE M6X1/A | GRAISSEUR A BILLES M6X1/A | KUGELFETTBsCHSE M6X1/A | ENGRAS. DE ESFERAS M6X1/A |
| 24 | F02050606 | ANELLO ARR.16 UNI 7435-75 | STOP RING 16 UNI 7435-75 | BAGUE ARRET 16 UNI 7435-75 | RING 16 UNI 7435-75 | ANILLO PARADA 16 UNI 7435-75 |
| 25 | 65338018 | MOLLA COMP.ZN SCATOLA RINV.SP | TRANSM. BOX COMP. SPRING . SP | RESSORT COMPL. ZN TRANSMISSION | DRUCKFEDER ZN VORGELEGEGEHZUSE | MUELLE COMP.ZN CAJA TRANSFER.. |
| 26 | 65338039 | MOLLA COMP.ZN INNESTO SP | ZN COUPLING COMP. SPRING SP | RESSORT COMPL. ZN ACCOUPLEM. | DRUCKFEDER ZN KUPPLUNG SP | MUELLE COMP.ZN ACOPLAMIENTO SP |
| 27 | 66248057 | SPINA DI SICUREZZA SP | SAFETY PIN SP | BROCHE PLASTIC SECURITE CARDAN | SICHERHEITSSTIFT SP | CLAVIJA DE SEGURIDAD SP |
| 28 | 66248102 | ANELLO SICUREZZA SP | SAFETY RING | BAGUE SECURITE SP | SICHERHEITSRING SP | ANILLO DE SEGURIDAD SP |
| 29 | 66349001 | BOCCOLA | BUSHING | BOITE | B_CHSE | CASQUILLO |
| 30 | 15421830 | INNESTO | COUPLING | ACCOUPLEMENT | KUPPLUNG | ACOPLAMIENTO |
| 31 | 16033200 | MONT.SCATOLA RINVIO PE | TRANSFER CASE | BOITE RENVOI | VORGELEGEGEHZUSE | CAJA DE DISTRIBUCIN |
| 32 | 16620620 | ASSE AVVISATORE SP COMPL. | COMPL. HORN SHAFT SP | AXE AVERTISSEUR SP COMPL. | ACHSE SIGNALHUPE SP KOMPL. | EJE AVISADOR SP COMPL. |

# TAV. 66/74




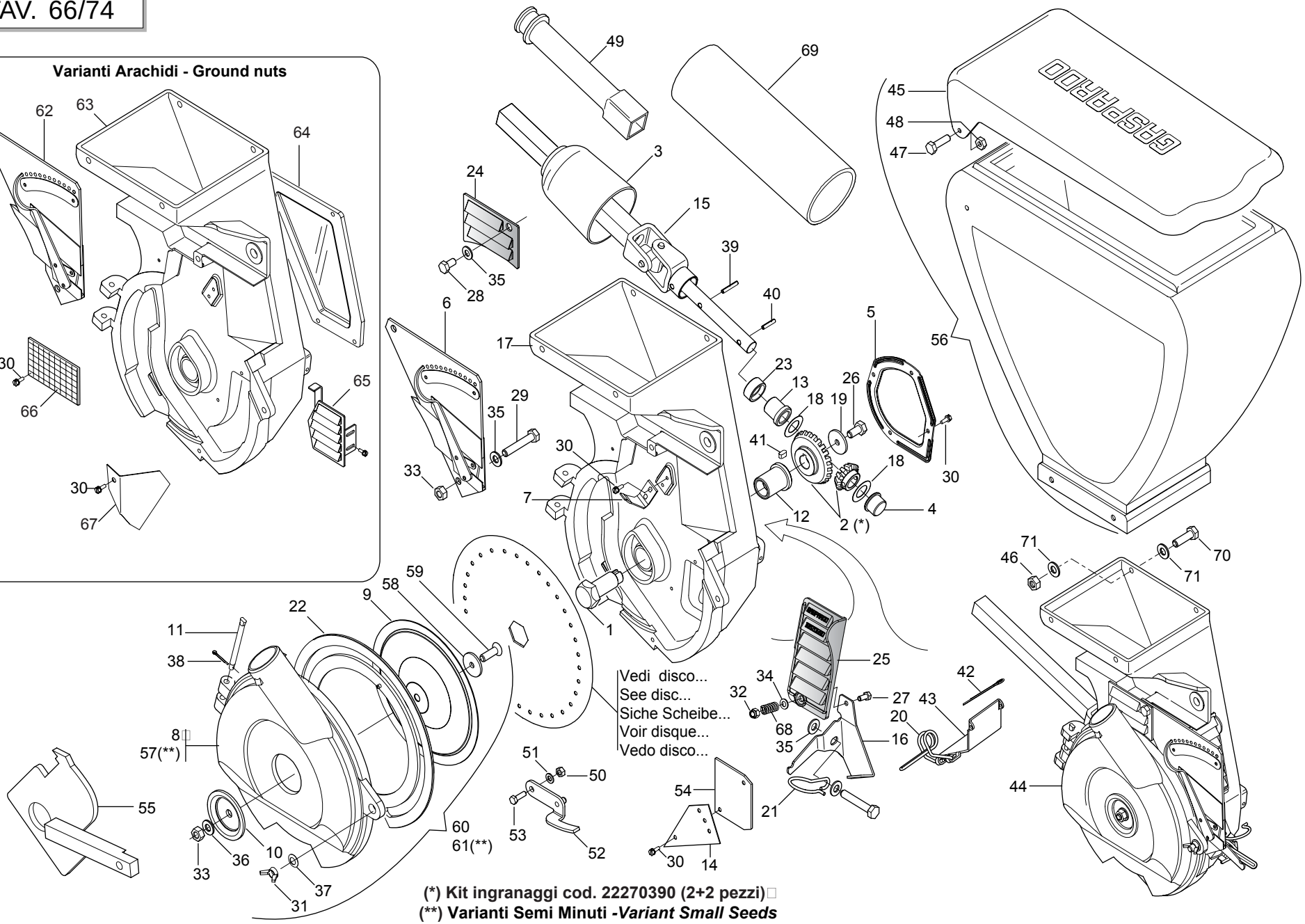


**(*) Kit ingranaggi cod. 22270390 (2+2 pezzi)**

**(**) Varianti Semi Minuti -*Variant Small Seeds***

## *DISTRIBUTORE SEMI*

TAV. 66/74

| Pos. | Cod. | Descrizione | Description | Description | Benennung | Descripcion |
|---|---|---|---|---|---|---|
| 1 | 22230046 | ASSE TRASMISSIONE DISCO | DISK GEAR AXLE | AXE ENTRAINEMENT DISQUE | ACHSE SCHEIBENANTRIEB | EJE TRANSMISIN DISCO A |
| 2 | 22270390 | KIT COPPIA CONICA DISTRIB.SEMI | KIT- SEED DISTR. CONICAL PAIR | COUPLE CON DISTR GRAINES (2+2) | KIT KEGELTRIEB SAMEN SZAPPARAT | SET PAR CONICO DISTRIB. SEMILL |
| 3 | 66248094 | COPRICARDANO SP | UNIVERSAL JOINT COVER SP | COUVRE-CARDAN SP | KARDANABDECKUNG SP | CUBRECARDæN SP |
| 4 | 66349008 | BOCCOLA | BUSHING | BOITE | BsCHSE | CASQUILLO |
| 5 | 22230035 | COPERCHIO SCATOLA INGRAN. | GEARWHEEL BOX COVER | COUVERCLE BOITE ENGRENAGE | DECKEL ZAHNRZDERGEHZUSE | TAPA CAJA ENGRAN. |
| 6 | 22230040 | SELETTORE MOBILE COMPLETO | MOBILE SELECTOR ASSY. | SELECTEUR MOBILE COMPL. | KOMPL. BEWEGLICHER WZHLER | SELECTOR MVIL COMPLETO S |
| 7 | 22230041 | SELETTORE FISSO | SELECTOR FIXED | SELECTEUR FIXE | FESTER WZHLER | SELECTOR FIJO |
| 8 | 22270205 | COPERCHIO MAGG.DISTRIB.SEME | INCREASED SEED DISTRIB. COVER | COUVERC. MAJOR.DISTRIB. GRAINE | sBERBEM. DECKEL SAMENSZAPPARAT | TAPA SOBREDIMENS. DISTRIB. SEM |
| 9 | 22230037 | TENUTA GUARNIZIONE | SEAL | BLOQUAGE GARNITURE | DICHTUNG | JUNTA ESTANCA |
| 10 | 16620470 | TAPPO CENTRALE H=7,5 | CENTRAL PLUG H=7.5 | BOUCHON CENTRAL H=7,5 | ZENTRALER PFROPFEN H=7,5 | TAPËN CENTRAL H=7,5 |
| 11 | 22230039 | PERNO COPERCHIO | COVER PIN | PIVOT COUVERCLE | DECKELZAPFEN | PERNO TAPA |
| 12 | 66349002 | BOCCOLA SINT.BASSOFONDO | BUSHING- SINTERED | BOITE FRITTEE | SYNTH. B_CHSE | CASQUILLO SINT. |
| 13 | 22270071 | BOCCOLA COLL.SINTER.20X24 | 20X24 SINTERED COLLARED BUSH | BOITE COLLIER FRITTEE 20X24 | ANSCHLUSSBUECHSE SINTER.20X24 | CASQUILLO CONEX. SINTER.20X24 |
| 14 | 22270204 | PIASTRA ANTI TRABOCC.SEMI SP | SEED ANTI-OVERFLOW PLATE SP | PLAQUE ANTI-DEBORD.T GRAINES S | SAMENsBERLAUFPLATTE SP | PLACA ANTI DESBORDAMIENTO SEMI |
| 15 | 15421141 | ASSE PORTA PIGNONE COMPL. | COMPL. PINION HOLDER SPINDLE | AXE PORTE PIGNON COMPL. | RITZELTRZGERACHSE KOMPLETT | EJE PORTAPI¾N COMPLETO A |
| 16 | 15421151 | FERMO MOLLA FALCIONE | CUTTER SPRING STOP | ARRET RESSORT HACHOIR | FESTSTELLVOR. FEDER FUTTERSCHN | BLOQUEO MUELLE GUADA¾ADORA |
| 17 | 16620120 | CORPO DI DISTRIBUZIONE SP540 | DISTRIBUTION ASSEMBLY SP540 | CORPS DE DISTRIBUTION SP540 | STREUBEH-LTER SP540 | CUERPO DISTRIBUCIËN SP540 |
| 18 | 22220073 | RONDELLA 28X0,3X16,5 | WASHER 28X0-3X16-5 | RONDELLE 28X0-3X16-5 | UNTERLEGSCHEIBE 28X0-3X16-5 | ARANDELA 28X0-3X16-5 |
| 19 | F01420037 | RONDELLA 6,6X24X2 6593 ZN | WASHER 6,6X24X2 6593 ZN | RONDELLE 6,6X24X2 6593 ZN | UNTERLEGSCHEIBE 6,6X24X2 6593 | ARANDELA 6,6X24X2 6593 ZN |
| 20 | 18902951 | MOLLA SPEC.ZN SCARICO | SPEC SPRING ZN DISCHARGE | RESSORT TRAPPE VIDANGE | SPEZIALFEDER ZN ENTLADUNG | MUELLE ESPEC. ZN DESCARGA |
| 21 | 18903180 | MOLLA CONVOGLIATORE MICRO | MICRO CONVEYOR SPRING | RESSORT CONVOYEUR MICRO | FEDER MIKRO FTRDERER | MUELLE CONDUCTOR MICRO |
| 22 | 66248068 | GUARNIZIONE COPERCH.DISTR. SP | DISTRIB. COVER GASKET. SP | JOINT ETANCH PORTE SP520/540 | DICHTUNG SZAPPARATDECKEL SP | JUNTA TAPA DISTR. SP |
| 23 | 66248219 | ANELLO PARAPOLVERE SP-520 | DUST COVER RING | BAGUE PARE-POUSSIERE SP-520 | STAUBSCHUTZRING SP-520 | ANILLO GUARDAPOLVO SP-520 |
| 24 | 16620540 | PORTA DI PROTEZIONE | SAFETY HATCH | PORTE DE PROTECTION | SCHUTZÍFFNUNG | PUERTA DE PROTECCIËN |
| 25 | 16620530 | PORTA DI CONTROLLO | INSPECTION DOOR | PORTE CONTROLE | KONTROLLTsR | PUERTA DE CONTROL |
| 26 | F01020403 | VITE 6 X16 5739 8.G ZN | BOLT 6X16 5739 8.G GALVANIZED | VIS 6X16 5739 8.G ZN | SCHRAUBE 6X16 5739 8.G ZN | TORNILLO 6X16 5739 8.G ZN |
| 27 | F01020382 | VITE 5X25 5739 8.G ZN | BOLT 5 X25 5739 8.G GALVANIZ. | VIS 5 X25 5739 8.G ZN | SCHRAUBE 5 X25 5739 8.G ZN | TORNILLO 5 X25 5739 8.G ZN |
| 28 | F01020432 | VITE 8 X16 5739 8.G ZN | BOLT 8X16 5739 8.G GALVANIZED | VIS 8X16 5739 8.G ZN | SCHRAUBE 8X16 5739 8.G ZN | TORNILLO 8X16 5739 8.G ZN |
| 29 | F01020451 | VITE 8 X45 5739 8.G ZN | BOLT 8 X45 5739 8.G GALVANIZ. | VIS 8 X45 5739 8.G ZN | SCHRAUBE 8 X45 5739 8.G ZN | TORNILLO 8X45 5739 8.G ZN |
| 30 | F01070011 | VITE AUTOF.4,2X9,5T.E.TAG.F.RO | BOLT- SELF-TAPPING 4-2X9-5T.E. | VIS AUTOTAR. 4-2X9-5 T. E. COU | SELBSTSCHNEID. SCHRAUBE 4-2X9- | TORNILLO AUTORROSC. 4-2X9-5 |
| 31 | F01240024 | DADO 8 5448 5.8 ZN | NUT 8 UNI 5448 5.8 ZN | ECROU 8 UNI 5448 5.8 ZN | MUTTER 8 UNI 5448 5.8 ZN | TUERCA 8 UNI 5448 5.8 ZN |
| 32 | F01230019 | DADO AUTOB.NOR.5 ZN | NORM.SELF-LOCKING NUT 5 GALVAN | ECROU AUTOB.NOR.5 ZN | SELBSTSP. MUTTER NOR.5 ZN | TUERCA AUTOB. NOR. 5 ZN |
| 33 | F01200244 | DADO 8 5588 6.8 ZN | NUT 8 UNI 5588 6.8 GALVANIZED | ECROU 8 UNI 5588 6.8 ZN | MUTTER 8 UNI 5588 6.8 ZN | TUERCA 8 UNI 5588 6.8 ZN |
| 34 | F01410023 | RONDELLA D5 UNI 6592 ZN | WASHER D5 UNI 6592 ZN | RONDELLE D5 UNI 6592 ZN | UNTERLEGSCHEIBE D5 UNI 6592 ZN | ARANDELA D5 UNI 6592 ZN |
| 35 | F01410051 | RONDELLA D8 UNI 6592 ZN | WASHER D8 UNI 6592 GALVANIZED | RONDELLE D8 UNI 6592 ZN | UNTERLEGSCHEIBE D8 UNI 6592 ZN | ARANDELA D8 UNI 6592 ZN |
| 36 | F01430059 | RONDELLA D8 DIN 6798 D.INT.ZN | WASHER D8 DIN 6798 D.INT.ZN | RONDELLE D8 DIN 6798 D. INT. Z | UNT. SCHEIBE D8 DIN 6798 D. IN | ARANDELA D8 DIN 6798 D.INT.ZN |
| 37 | F01460115 | RONDELLA D8 DIN 137/A | WASHER D8 DIN 137/A | RONDELLE D8 DIN 137/A | UNTERLEGSCHEIBE D8 DIN 137/A | ARANDELA D8 DIN 137/A |
| 38 | F02200137 | COPIGLIA 2 X15 1336 ZN | SPLIT PIN 2 X15 1336 GALVAN. | GOUPILLE 2 X15 1336 ZN | SPLINT 2 X15 1336 ZN | PASADOR 2 X15 1336 ZN |
| 39 | F02100079 | SPINA EL.5 X20 DIN 1481 | PIN EL. .5 X20 DIN 1481 | FICHE EL. 5 X20 DIN 1481 | SPANNSTIFT 5X20 DIN 1481 | CLAVIJA EL.5 X20 DIN 1481 |
| 40 | F02100083 | SPINA EL.5 X24 DIN 1481 | PIN EL. 5 X24 DIN 1481 | FICHE EL. 5 X24 DIN 1481 | SPANNSTIFT 5 X24 DIN 1481 | CLAVIJA EL.5 X24 DIN 1481 |
| 41 | F02150012 | LINGUETTA 05X5X10 UNI6604 | TAB 05X5X10 UNI6604 | LANGUETTE 05X5X10 UNI6604 | FEDERKEIL 05X5X10 UNI6604 | LENGsETA 05X5X10 UNI6604 |
| 42 | F02200200 | COPIGLIA 4 X70 1336 ZN | SPLIT PIN 4 X70 1336 GALVAN. | GOUPILLE 4 X70 1336 ZN | SPLINT 4 X70 1336 ZN | PASADOR 4 X70 1336 ZN |
| 43 | 15421870 | PORTA DI SCARICO DISTRIBUTORE | DISTRIBUTOR DISCHARGE DOOR | PORTE DE DECHARGEMENT DISTRIB, | ENTLADUNGSTsR SZAPPARAT | PUERTA DESCARGA DISTRIBUIDOR |
| 44 | 16620061 | CORPO DISTRIBUZIONE BIETOLE | BEET DISTRIBUTION ASSEMBLY | CORPS DISTRIBUTION BETTERAVES | STREUBEH-LTER R_BEN | CUERPO DISTRIBUCIËN REMOLACHAS |
| 44 | 16620101 | CORPO DISTRIBUTORE COMPL.SP540 | COMPL. DISTRIBUTOR BODY SP540 | CORPS DISTRIBUTEUR COMPL.SP540 | STREUERKÍRPER, KOMPL.SP540 | CUERPO DISTRIBUIDOR COMPL.SP54 |
| 45 | 19002750 | COPERCHIO SERBATOIO SEME 530 | SEED TANK COVER 530 | COUVERCLE RES GRAINES 530-MT | SAMENBEHZLTERDECKEL 530 | TAPA DEPSITO SEMILLA 530 A |
| 46 | F01220211 | DADO TRISTOP M 6 | NUT- TRISTOP M 6 | ECROU TRISTOP M 6 | MUTTER TRISTOP M 6 | TUERCA TRISTOP M 6 |
| 47 | F01020403 | VITE 6 X16 5739 8.G ZN | BOLT 6X16 5739 8.G GALVANIZED | VIS 6X16 5739 8.G ZN | SCHRAUBE 6X16 5739 8.G ZN | TORNILLO 6X16 5739 8.G ZN |
| 48 | F01200232 | DADO 6 5588 6.8 ZN | NUT 6 UNI 5588 6.8 GALVANIZED | ECROU 6 UNI 5588 6.8 ZN | MUTTER 6 UNI 5588 6.8 ZN | TUERCA 6 UNI 5588 6.8 ZN |
| 49 | 15421830 | INNESTO | COUPLING | ACCOUPLEMENT | KUPPLUNG | ACOPLAMIENTO |
| 50 | F01200220 | DADO 5 5588 6.8 ZN | NUT 5 UNI 5588 6.8 GALVANIZED | ECROU 5 UNI 5588 6.8 ZN | MUTTER 5 UNI 5588 6.8 ZN | TUERCA 5 UNI 5588 6.8 ZN |
| 51 | F01430035 | RONDELLA D5 DIN 6798 D.INT.ZN | WASHER D5 DIN 6798 D.INT.ZN | RONDELLE D5 DIN 6798 D. INT. Z | UNT. SCHEIBE D5 DIN 6798 D. IN | ARANDELA D5 DIN 6798 D.INT.ZN |
| 52 | 16620010 | ESPULSORE SEMI BIETOLA | SUGAR BEET EJECTOR | EXPULSEUR BETTES | AUSWERFER RÜBEN | EXPULSOR REMOLACHA |
| 53 | F01020381 | VITE 5X20 5739 INOX A2 | BOLT 5X20 5739 | VIS 5X20 5739 | SCHRAUBE 5X20 5739 | TORNILLO 5X20 5739 |
| 54 | 22270133 | PIASTRINA ANTI TRABOC.SEMI MIN | MINUTE SEED PLATE SP | PLAQUETTE GRAINES PETITES SP | PLZTTCHEN KLEINE SAMEN SP | PLAQUETA SEMILLAS PEQUE¾AS SP |

# TAV. 66/74




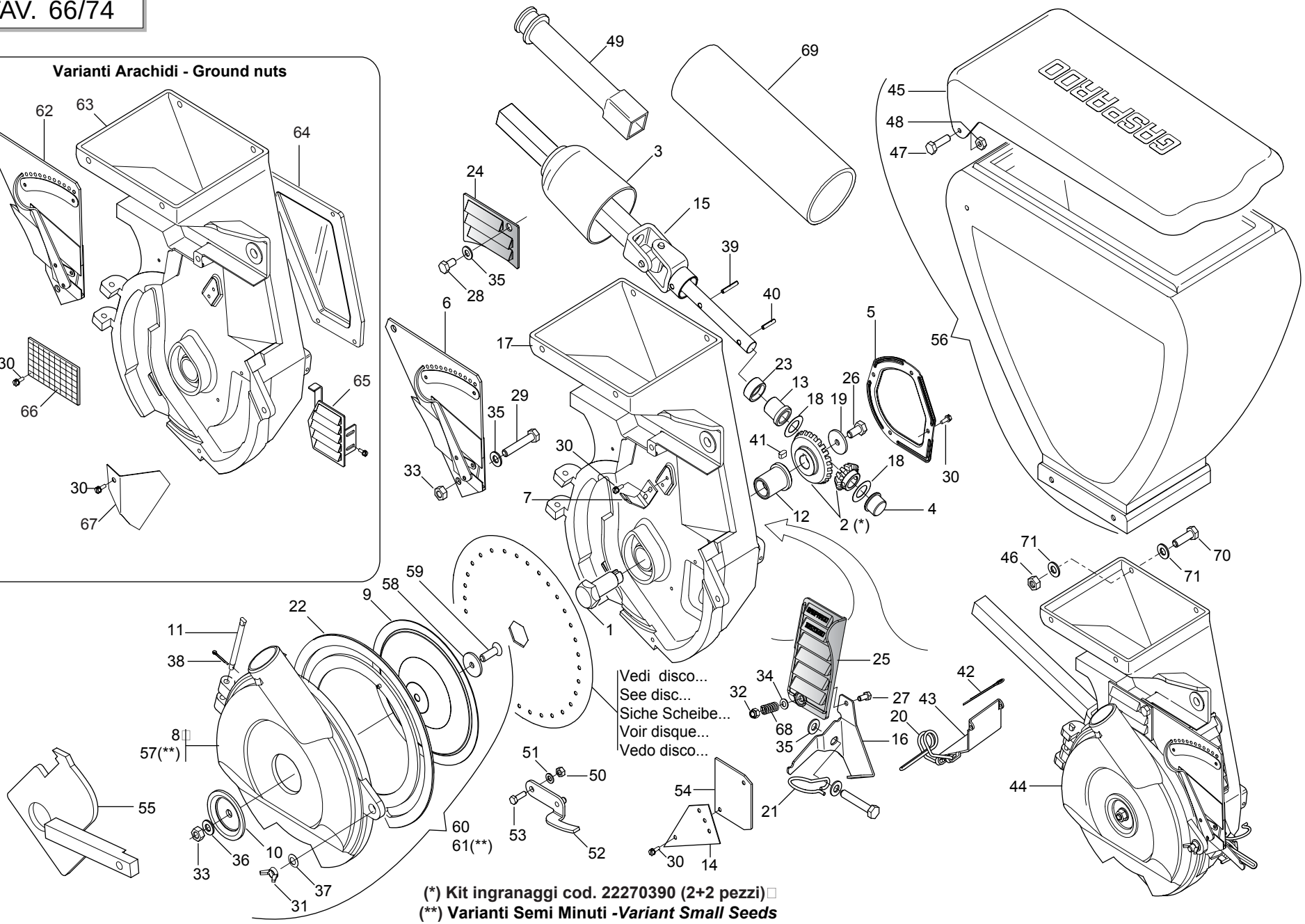


**(*) Kit ingranaggi cod. 22270390 (2+2 pezzi)**

**(**) Varianti Semi Minuti -*Variant Small Seeds***

## *DISTRIBUTORE SEMI*

TAV. 66/74

| Pos. | Cod. | Descrizione | Description | Description | Benennung | Descripcion |
|---|---|---|---|---|---|---|
| 55 | 16620360 | DIMA SELETTORE FISSO | POSITION PLATE FOR FIXED SELEC | GABARIT POSITION SELECTEUR FIX | EINSTELLEHRE F_R FIXEN ABSTREI | PLACA PARA LA POSICIËN SELECTO |
| 56 | 15422241 | SERBATOIO SEME COMPLETO SP | SEED TANK ASSY. | RESERVOIR GRAINES COMP PLA SP | SAMENBEHZLTER KOMPLETT | DEPSITO SEMILLAS COMPLETO B |
| 57 | 16620450 | COPERCHIO MAGGIORATO SEMI MIN. | INCREASED SEED DISTRIB. COVER | COUVERC. MAJOR.DISTRIB. GRAINE | _BERBEM. DECKEL SAMENSZAPPARAT | TAPA SOBREDIMENS. DISTRIB. SEM |
| 58 | 18701890 | RONDELLA D.8,5 SVASATA ZN. | FLARED WASHER D.8.5 ZN. | RONDELLE D.8,5 +VAS+E ZN. | F-CHERSCHEIBE D.8,5 ZN. | ARANDELA Ï 8,5 ABOCINADA ZN. |
| 59 | F01030055 | VITE 8X20 5933 8.G ZN. | SCREW 8X20 5933 8.G ZN. | VIS 8X20 5933 8.G ZN. | SCHRAUBE 8X20 5933 8.G ZN. | TORNILLO 8X20 5933 8.G ZN. |
| 60 | 13822440 | COPERCHIO MAGGIOR.D45 COMPLETO | ASSY.INCREASED COVER | COUVERC. MAJOR.COMPL. | sBERBEM. DECKEL KOMPLETT | TAPA SOBREDIMENS. COMPLETO |
| 61 | 16620460 | COPERCHIO SEMI MINUTI COMPL. | COMPL. MINUTE SEED COVER | COUVERCLE GRAINES PETITES COMP | DECKEL KLEINSAMEN KOMPL. | TAPA SEMILLAS PEQUEðAS COMPL |
| 62 | 22270128 | SELETTORE MOBILE ARACHIDI SP | MOBILE SELECTOR- PEANUTS SP | SELECTEUR MOBILE ARACHIDES SP | BEWEGLICHER WZHLER ERDNsSSE SP | SELECTOR MVIL CACAHUETES. S |
| 63 | 15422520 | CORPO DISTRIBUTORE ARACHIDI SP | PEANUT DISTRIBUTION CASING | CORPS DE DISTRIBUTION ARACHIDE | VERTEILUNGSKTRPER ERDNsSSE | CUERPO DE DISTRIBUC.CACAHUETES |
| 64 | 22270132 | FINESTRELLA CONTR.ARACHIDI SP | PEANUT CONTRA. WINDOW SP | FENETRE CONTR. ARACHIDES SP | LUKE ERDNUSSKONTROLLE SP | VENTANILLA CONTR. CACAHUETES. |
| 65 | 22230033 | PORTA CONTROLLO SEME | SEED INSPECTION DOOR | PORTE CONTROLE GRAINES | KONTROLLTsR SAMEN | PUERTA DE CONTROL SEMILLAS |
| 66 | 22270095 | GRIGLIA PROTEZIONE SP | PROTECT. GRID SP | GRILLE PROTECTION SP | SCHUTZGITTER SP | REJILLA PROTECCIN SP G |
| 67 | 22270130 | PIASTRINA ANTI TRABOC.ARACHIDI | PEANUT CLOSING PLATE | PLAQUETTE FERMETURE ARACH. SP | ABSCHLUSSPLZTTCHEN ERDNsSSE SP | PLAQUETA CIERRE CACAHUETES SP |
| 68 | 18904240 | MOLLA APERTURA PORTA CONTROLLO | SPRING | RESSORT | FEDER | MUELLE |
| 69 | 19005100 | TUBO D.63X3X280 NERO | PIPE D.63X3X280 | TUBE D.63X3X280 | ROHR D.63X3X280 | TUBO D.63X3X280 |
| 70 | F01020404 | VITE 6 X20 5739 8.G ZN | BOLT 6X20 5739 8.G GALVANIZED | VIS 6X20 5739 8.G ZN | SCHRAUBE 6X20 5739 8.G ZN | TORNILLO 6X20 5739 8.G ZN |
| 71 | F01420036 | ROND.PIANA 6,6X 18X2 6593 ZN | FLAT WASHER 6-6X 18X2 6593 ZN | ROND. PLATE 6-6X 18X2 6593 ZN | SCHEIBE 6-6X 18X2 6593 ZN | ARAND. PLANA 6-6X 18X2 6593 ZN |

# TAV. 66/230

| Codice<br>*Code*<br>Code<br>*Kodex*<br>Codigo | Nr e ł fori<br>*Nr and ł holes*<br>Nr et ł trous<br>*Nr und ł l□cher*<br>Nr y ł agujeros | | Coltura | *Seeds* | Cultures | *Samen* | Semillas | Distanza semina<br>Seeding dist.<br>Dist. de semis<br>Saatabstandes<br>Dist. siembra |
|---|---|---|---|---|---|---|---|---|
| 22230298 | 20 | 0,8 **(1)** | | | | | | |
| 22230319 | 20 | 1 **(1)** | Cavolo broccolo | *Broccoli* | Chou-Broccoli | *Brokkoli* | Br□culi | |
| 22230327 | 20 | 1,1 **(1)** | Cavolo verza | *Cabbage,Savoy* | Chou de Milan | *Wirsing* | Col de MilÆn | |
| 22230320 | 20 | 1,5 | | | | | | |
| 22230294 | 20 | 2,1 | Zucchino<br>Melone<br>Anguria<br>Cardo | *Squash*<br>*Melon*<br>*Watermelon*<br>- | Courgette<br>Melon<br>PastŁque<br>- | *K□rbis*<br>*Melone*<br>*Wassermelone*<br>- | Calabac□n<br>Mel□n<br>Sand□a<br>- | **min.10,4 cm.** |
| 22230203 | 20 | 2,5 | Girasole | *Sunflower* | Tournesol | *Sonnenblumen* | Girasol | |
| 22230192 | 20 | 3,5 | Cotone<br>Mais (Piccolo) | *Cotton*<br>*Corn (Little)* | -<br>Mais (Petit) | *Baumwohl*<br>*Mais (Klein)* | -<br>Maiz (Pequeæo) | **max. 41,7 cm.** |
| 22230048 | 20 | 4,5 | Mais | *Corn* | Mais | *Mais* | Maiz | |
| 22230047 | 20 | 5,5 | Mais (Grosso)<br>Ceci<br>Fagiolo borlotto e cannellino<br>Arachidi | *Corn (Big)*<br>*Pulses*<br>*Beans*<br>*Peanut* | Mais (Gros)<br>-<br>Haricot<br>- | *Mais (Grosse)*<br>-<br>*Bohnen*<br>- | Maiz (Grueso)<br>-<br>Poroto<br>- | |
| 22230205 | 20 | 7 | Arachidi<br>Lupino | *Peanut*<br>- | -<br>- | -<br>- | -<br>- | |
| 10124030R | 26 | 1 **(1)** | | | | | | |
| 22230253 | 26 | 1,5 | | | | | | |
| 22230296 | 26 | 2,1 | Zucchino<br>Melone<br>Anguria<br>Cardo | *Squash*<br>*Melon*<br>*Watermelon*<br>- | Courgette<br>Melon<br>PastŁque<br>- | *K□rbis*<br>*Melone*<br>*Wassermelone*<br>- | Calabac□n<br>Mel□n<br>Sand□a<br>- | **min. 8 cm.** |
| 22230289 | 26 | 2,5 | Girasole | *Sunflower* | Tournesol | *Sonnenblumen* | Girasol | |
| 22230249 | 26 | 3,5 | Cotone<br>Mais (Piccolo) | *Cotton*<br>*Corn (Little)* | -<br>Mais (Petit) | *Baumwohl*<br>*Mais (Klein)* | -<br>Maiz (Pequeæo) | |
| 22230050 | 26 | 4,5 | Mais | *Corn* | Mais | *Mais* | Maiz | **max. 32,1 cm.** |
| 22230303 | 26 | 5 | | | | | | |
| 22230049 | 26 | 5,5 | Mais (Grosso)<br>Ceci<br>Fagiolo borlotto e cannellino<br>Arachidi | *Corn (Big)*<br>-<br>*Beans*<br>- | Mais (Gros)<br>-<br>Haricot<br>- | *Mais (Grosse)*<br>-<br>*Bohnen*<br>- | Maiz (Grueso)<br>-<br>Poroto<br>- | |
| 22230317 | 36 | 1,1 **(1)** | Pomodoro | *Tomato* | Tomate | *Tomate* | Tomate | |
| 22230196 | 36 | 1,5 | Lenticchia<br>Cetriolo<br>Pomodoro conf.<br>ł 2,5□3,5 mm | -<br>*Cucumber*<br>*Tomato pilled*<br>*ł 2,5□3,5 mm* | -<br>Concombre<br>Tomate enrobŁ<br>ł 2,5□3,5 mm | -<br>*Gurke*<br>*Tomate pilliert*<br>*ł 2,5□3,5 mm* | -<br>Pepino<br>Tomate conf.<br>ł 2,5□3,5 mm | |
| 22230051 | 36 | 2,1 | Barbabietola<br>Zucchino<br>Melone<br>Anguria<br>Cardo<br>Sorgo<br>Sesamo | *Beets*<br>*Squash*<br>*Melon*<br>*Watermelon*<br>-<br>*Sorghum*<br>- | Betteraves<br>Courgette<br>Melon<br>PastŁque<br>-<br>Sorgo<br>- | *R□ben*<br>*K□rbis*<br>*Melone*<br>*Wassermelone*<br>-<br>*Hirse*<br>- | Remolacha<br>Calabac□n<br>Mel□n<br>Sand□a<br>-<br>Sorgo<br>- | **min. 5,8 cm.** |

| Codice<br>*Code*<br>Code<br>*Kodex*<br>Codigo | Nr e ł fori<br>*Nr and ł holes*<br>Nr et ł trous<br>*Nr und ł l□cher*<br>Nr y ł agujeros | | Coltura | *Seeds* | Cultures | *Samen* | Semillas | Distanza semina<br>Seeding dist.<br>Dist. de semis<br>Saatabstandes<br>Dist. siembra |
|---|---|---|---|---|---|---|---|---|
| 22230290 | 36 | 2,5 | Pomodoro conf.<br>ł 3,5□4,5 mm<br>Ginseng | *Tomato pilled*<br>*ł 3,5□4,5 mm*<br>*Ginseng* | Tomate enrobŁ<br>ł 3,5□4,5 mm<br>Ginseng | *Tomate pilliert*<br>*ł 3,5□4,5 mm*<br>*Ginseng* | Tomate conf.<br>ł 3,5□4,5 mm<br>Ginseng | **max. 23,2 cm.** |
| 22230197 | 36 | 3,5 | Fagiolino<br>Piselli<br>Soia | *Beans (Little)*<br>*Peas*<br>*Soyabeans* | Haricot (Petit)<br>Pois<br>Soja | *Gr□ne Bohnen*<br>*Erbsen*<br>*Soja* | Judias verdes<br>Arveja<br>Soja | |
| 22230199 | 36 | 4,5 | Fagiolo<br>Piselli<br>Favino | *Beans*<br>*Peas*<br>- | Haricot<br>Pois<br>- | *Bohnen*<br>*Erbsen*<br>- | Poroto<br>Arveja<br>- | |
| 22230295 | 36 | 5,5 | Fagiolo | *Beans* | Haricot | *Bohnen* | Poroto | |
| 10123760R | 36 | 5,5 **(2)** | Fagiolo | *Beans* | Haricot | *Bohnen* | Poroto | |
| 22230304 | 36 | 7 | | | | | | |
| 22230321 | 52 | 1,5 | | | | | | **min. 4 cm.** |
| 22230328 | 52 | 2,1 | Barbabietola | *Beets* | Betteraves | *R□ben* | Remolacha | |
| 22230299 | 52 | 2,5 | | | | | | |
| 22230316 | 52 | 3,5 | Fagiolino | *Beans (Little)* | Haricot (Petit) | *Gr□ne Bohnen* | Judias verdes | |
| 22230288 | 52 | 4,25 | Soia | *Soyabeans* | Soja | *Soja* | Soja | **max. 16 cm.** |
| 22230194 | 72 | 0,5 **(1)** | Endivia<br>Lattuga | *Endive*<br>*Lettuce* | ChicorŁe<br>Laitue | *Winterendivien*<br>*Kopfsalat* | Escarola<br>Lechuga | |
| 22230195 | 72 | 0,8 **(1)** | Endivia<br>Lattuga<br>Rapa<br>Senape<br>Finocchio<br>Anice | *Endive*<br>*Lettuce*<br>*Turnip*<br>*Mustard*<br>*Fennel*<br>- | ChicorŁe<br>Laitue<br>Navet<br>Moutarde<br>Fenouil<br>- | *Winterendivien*<br>*Kopfsalat*<br>*Speiser□ben*<br>*Senft*<br>*Fenchel*<br>- | Escarola<br>Lechuga<br>Nabo<br>-<br>Hinojo<br>- | |
| 22230193 | 72 | 1,1 **(1)** | Pomodoro<br>Rapa<br>Finocchio<br>Colza<br>Panico | *Tomato*<br>*Turnip*<br>*Fennel*<br>*Canola*<br>- | Tomate<br>Navet<br>Fenouil<br>Colza<br>- | *Tomate*<br>*Speiser□ben*<br>*Fenchel*<br>*Raps*<br>- | Tomate<br>Nabo<br>Hinojo<br>Colza<br>- | **min. 2,9 cm.** |
| 22230257 | 72 | 1,5 | Spinacio<br>Ravanello<br>Asparagio<br>Pomodoro conf.<br>ł 2,5□3,5 mm | *Spinach*<br>*Radish*<br>*Asparagus*<br>*Tomato pilled*<br>*ł 2,5□3,5 mm* | Epinard<br>Radis<br>Asperge<br>Tomate enrobŁ<br>ł 2,5□3,5 mm | *Spinat*<br>*Radies*<br>*Spargel*<br>*Tomate pilliert*<br>*ł 2,5□3,5 mm* | Espinaca<br>Rabanito<br>EspÆrrago<br>Tomate conf.<br>ł 2,5□3,5 mm | **max. 11,6 cm.** |
| 22230213 | 72 | 2,1 | Bieta a coste<br>Saggina | *Swiss Chard*<br>- | PoirŁe<br>- | *Mangold*<br>- | Acelga<br>- | |
| 10124040R | 72 | 2,5 | | | | | | |
| 22230198 | 72 | 3,5 | Fagiolino<br>Soia | *Beans (Little)*<br>*Soyabeans* | Haricot (Petit)<br>Soja | *Gr□ne Bohnen*<br>*Soja* | Judias verdes<br>Soja | |
| 10124020R | 72 | 4,25 | Soia | *Soyabeans* | Soja | *Soja* | Soja | |
| 22230256 | 72 | 4,5 | | | | | | |



GASPARDO

## *DISCHI DI SEMINA*

TAV. 66/230

| Pos. | Cod. | Descrizione | Description | Description | Benennung | Descripcion |
|---|---|---|---|---|---|---|
| 1 | 10121460 | DISCO 96 FORI D 1,0 SP | DISK 96 HOLES D.1,0 SP | DISQUE 96 TROUS D. 1,0 SP | SCHEIBE 96 LTCHER D.1,0 SP | DISCO 96 ORIFICIOS D. 1,0 SP |
| 2 | 10123970 | DISCO 102 F.D.2 SP | DISK 102 HOLES D. 2 SP | DISQUE 102 TROUS D. 2 SP | SCHEIBE 102 LTCHER D.2 SP | DISCO 102 ORIFICIOS D. 2 SP |
| 3 | 10124010 | DISCO 60 FORI D.4,5 SP LM | DISK 60 HOLES D.4-5 SP LM | DISQUE 60 TROUS D. 4-5 SP LM | SCHEIBE 60 LTCHER D.4-5 SP LM | DISCO 60 ORIFICIOS D.4-5 SP LM |
| 4 | 10124020 | DISCO 72 FORI D.4,25 SP LM | DISK 72 HOLES D.4-25 SP LM | DISQUE 72 TROUS D. 4-25 SP LM | SCHEIBE 72 LTCHER D.4-25 SP | DISCO 72 ORIFICIOS D.4-5 SP LM |
| 5 | 10124030 | DISCO ACC. 26 FORI D 1,0 SP | STEEL DISK 26 HOLES D 1.0 SP | DISQUE ACC. 26 TROUS D 1-0 SP | SCHEIBE ZUB. 26 LTCHER D 1-0 S | DISCO AC. 26 ORIFICIOS D 1-0 S |
| 6 | 10124040 | DISCO ACC. 72 FORI D 2,5 SP | DISK ST. 72 H. D 2,5 | DISQUE ACIER 72 TROUS D 2,5 | STAHLSCHEIBE 72 L. D 2,5 | DISCO ACERO 72 ORIF. D 2,5 |
| 7 | 10124050 | DISCO ACC.104 FORI D 1,1 SP | STEEL DISC 104 HOLES D 1.1 SP | DISQUE ACIER 104 TROUS D 1,1 | STAHLSCHEIBE 104 BOHR. D 1,1 | DISCO ACC.104 AGUJEROS D 1,1 |
| 8 | 10124060 | DISCO 26 F. D.4 | DISC 26 F. D.4 | DISQUE 26 TROUS D.4 | SCHEIBE 26 B. D.4 | DISCO 26 AGUJEROS ï 4 |
| 9 | 10124070 | DISCO 36 FORI D 1,7 SP LM | DISK 36 HOLES D.1.7 SP LM | DISQUE 36 TROUS D.1,7 SP LM | SCHEIBE 36 LTCHER D.1,7 SP LM | DISCO 36 ORIFICIOS D.1,7 SP LM |
| 10 | 10124090 | DISCO 6 FORI D.4,5 | DISK 6 HOLES D.4,5 | DISQUE 6 TROUS D. 4,5 | SCHEIBE 6 LTCHER D.4,5 | DISCO 6 ORIFICIOS D.4,5 |
| 11 | 10124100 | DISCO 6 FORI D.3,0 | DISK 6 HOLES D.3,0 | DISQUE 6 TROUS D. 3,0 | SCHEIBE 6 LTCHER D.3,0 | DISCO 6 ORIFICIOS D.3,0 |
| 12 | 22230047 | DISCO 20 F. D.5,5 SP LM | DISK 20 H. D.5-5 CORN SP LM | DISQUE 20 TROUS D. 5-5 MAIS SP | SCHEIBE 20 L. D.5-5 MAIS SP LM | DISCO 20 ORIF. D.5-5 MAZ SP LD |
| 13 | 22230048 | DISCO 20 F. D.4,5 SP LM | DISK 20 H. D.4-5 SUNF..SP LM | DISQUE 20 TROUS D. 4-5 TOURN. | SCHEIBE 20 L. D.4-5 SONNENBLU. | DISCO 20 ORIF. D.4-5 GIRA.SP L |
| 14 | 22230049 | DISCO 26 F. D.5,5 SP LM | DISK 26 H. D.5-5 CORN SP LM | DISQUE 26 TROUS D. 5-5 MAIS SP | SCHEIBE 26 L. D.5-5 MAIS SP LM | DISCO 26 ORIF. D.5-5 MAZ SP LD |
| 15 | 22230050 | DISCO 26 F. D.4,5 SP LM | DISK 26 H. D.4-5 CORN SP LM | DISQUE 26 TROUS D. 4-5 MAIS | SCHEIBE 26 L. D.4-5 MAIS | DISCO 26 ORIF. D.4-5 MAIZ SP L |
| 16 | 22230051 | DISCO 36 F. D.2,1 SP LM | DISK 36 H. D.2-1 BEET.SP LM | DISQUE 36 TROUS D. 2-1 BETTES | SCHEIBE 36 L.R. D.2-1 RsBEN SP | DISCO 36 ORIF. D.2-1 REMOLACHA |
| 17 | 22230192 | DISCO 20 FORI D.3,5 SP LM | DISK 20 HOLES D.3-5 SP LM | DISQUE 20 TROUS D. 3-5 SP LM | SCHEIBE 20 LTCHER D.3-5 SP LM | DISCO 20 ORIFICIOS D.3-5 SP LM |
| 18 | 22230193 | DISCO 72 FORI D.1,1 SP LM | DISK 72 HOLES D.1-1 SP LM | DISQUE 72 TROUS D. 1-1 SP LM | SCHEIBE 72 LTCHER D.1-1 SP LM | DISCO 72 ORIFICIOS D.1-1 SP LM |
| 19 | 22230194 | DISCO 72 FORI D.0,5 SP LM | DISK 72 HOLES D.0-5 SP LM | DISQUE 72 TROUS D. 0-5 SP LM | SCHEIBE 72 LTCHER D.0-5 SP LM | DISCO 72 ORIFICIOS D.0-5 SP LM |
| 20 | 22230195 | DISCO 72 FORI D.0,8 SP LM | DISK 72 HOLES D.0-8 SP LM | DISQUE 72 TROUS D. 0-8 SP LM | SCHEIBE 72 LTCHER D.0-8 SP LM | DISCO 72 ORIFICIOS D.0-8 SP LM |
| 21 | 22230196 | DISCO 36 FORI D.1,5 SP LM | DISK 36 HOLES D.1-5 SP LM | DISQUE 36 TROUS D. 1-5 SP LM | SCHEIBE 36 LTCHER D.1-5 SP LM | DISCO 36 ORIFICIOS D.1-5 SP LM |
| 22 | 22230197 | DISCO 36 FORI D.3,5 SP LM | DISK 36 HOLES D.3-5 SP LM | DISQUE 36 TROUS D. 3-5 SP LM | SCHEIBE 36 LTCHER D.3-5 SP LM | DISCO 36 ORIFICIOS D.3-5 SP LM |
| 23 | 22230198 | DISCO 72 FORI D.3,5 SP LM | DISK 72 HOLES D.3-5 SP LM | DISQUE 72 TROUS D. 3-5 SP LM | SCHEIBE 72 LTCHER D.3-5 SP LM | DISCO 72 ORIFICIOS D.3-5 SP LM |
| 24 | 22230199 | DISCO 36 FORI D.4,5 SP LM | DISK 36 HOLES D.4-5 SP LM | DISQUE 36 TROUS D. 4-5 SP LM | SCHEIBE 36 LTCHER D.4-5 SP LM | DISCO 36 ORIFICIOS D.4-5 SP LM |
| 25 | 22230203 | DISCO 20 F0RI D.2,5 SP LM | DISK 20 HOLES D.2-5 SP LM | DISQUE 20 TROUS D. 2-5 SP LM | SCHEIBE 20 LÖCHER D.2-5 SP LM | DISCO 20 ORIF. D.2-5 SP LM |
| 26 | 22230205 | DISCO 20 F. D.7,0 ARAC.SP LM | DISK 20 H. D.7-0 PEAN..SP LM | DISQUE 20 TROUS D. 7-0 ARACHID | SCHEIBE 20 L. D.7-0 ERDNUSS SP | DISCO 20 ORIF. D.7-0 CACAH. SP |
| 27 | 22230213 | DISCO 72 FORI D.2,1 SP LM | DISK 72 HOLES D.2-1 SP LM | DISQUE 72 TROUS D. 2-1 SP LM | SCHEIBE 72 LTCHER D.2-1 SP LM | DISCO 72 ORIFICIOS D.2-1 SP LM |
| 28 | 22230216 | DISCO 144 FORI D.1,1 SP LM | DISK 144 HOLES D.1-1 SP LM | DISQUE 144 TROUS D. 1-1 SP LM | SCHEIBE 144 LTCHER D.1-1 SP LM | DISCO 144 ORIFICIOS D.1-1 SP L |
| 29 | 22230217 | DISCO 36 FORI D.5,5 SP LM | DISK 36 HOLES D.5-5 SP LM | DISQUE 36 TROUS D. 5-5 SP LM | SCHEIBE 36 LTCHER D.5-5 SP LM | DISCO 36 ORIFICIOS D.5-5 SP LM |
| 30 | 22230249 | DISCO 26 FORI D 3,5 SP LM | DISK 26 HOLES D 3-5 SP LM | DISQUE 26 TROUS D 3-5 SP LM | SCHEIBE 26 LTCHER D 3-5 SP LM | DISCO 26 ORIFICIOS D 3-5 SP LM |
| 31 | 22230250 | DISCO 144 FORI D.2,1 SP LM | DISK 144 HOLES D.2-1 SP LM | DISQUE 144 TROUS D. 2-1 SP LM | SCHEIBE 144 LTCHER D.2-1 SP LM | DISCO 144 ORIFICIOS D.2-1 SP L |
| 32 | 22230253 | DISCO 26 FORI D.1,5 SP LM | DISK 26 HOLES D.1-5 SP LM | DISQUE 26 TROUS D. 1-5 SP LM | SCHEIBE 26 LTCHER D.1-5 SP LM | DISCO 26 ORIFICIOS D.1-5 SP LM |
| 33 | 22230256 | DISCO 72 FORI D.4,5 SP LM | DISK 72 HOLES D.4-5 SP LM | DISQUE 72 TROUS D. 4-5 SP LM | SCHEIBE 72 LTCHER D.4-5 SP LM | DISCO 72 ORIFICIOS D.4-5 SP LM |
| 34 | 22230257 | DISCO 72 FORI D.1,5 SP LM | DISK 72 HOLES D.1-5 SP LM | DISQUE 72 TROUS D. 1-5 SP LM | SCHEIBE 72 LTCHER D.1-5 SP LM | DISCO 72 ORIFICIOS D.1-5 SP LM |
| 35 | 22230287 | DISCO 144 FORI D.1,5 SP LM | DISK 144 HOLES D.1-5 SP LM | DISQUE 144 TROUS D. 1-5 SP LM | SCHEIBE 144 LTCHER D.1-5 SP LM | DISCO 144 ORIFICIOS D.1-5 SP L |
| 36 | 22230288 | DISCO 52 FORI D.4,25 SP LM | DISK 52 HOLES D.4-25 SP LM | DISQUE 52 TROUS D. 4-25 SP LM | SCHEIBE 52 LTCHER D.4-25 SP LM | DISCO 52 ORIFICIOS D.4-25 SP L |
| 37 | 22230289 | DISCO 26 FORI D.2,5 SP LM | DISK 26 HOLES D.2-5 SP LM | DISQUE 26 TROUS D. 2-5 SP LM | SCHEIBE 26 LTCHER D.2-5 SP LM | DISCO 26 ORIFICIOS D.2-5 SP LM |
| 38 | 22230290 | DISCO 36 FORI D.2,5 SP LM | DISK 36 HOLES D.2-5 SP LM | DISQUE 36 TROUS D. 2-5 SP LM | SCHEIBE 36 LTCHER D.2-5 SP LM | DISCO 36 ORIFICIOS D.2-5 SP LM |
| 39 | 22230294 | DISCO 20 FORI D.2,1 SP LM | DISK 20 HOLES D.2-1 SP LM | DISQUE 20 TROUS D. 2-1 SP LM | SCHEIBE 20 LTCHER D.2-1 SP LM | DISCO 20 ORIFICIOS D.2-1 SP LM |
| 40 | 22230296 | DISCO 26 FORI D.2,1 SP LM | DISK 26 HOLES D.2-1 SP LM | DISQUE 26 TROUS D. 2-1 SP LM | SCHEIBE 26 LÖCHER D.2-1 SP LM | DISCO 26 ORIFICIOS D.2-1 SP LM |
| 41 | 22230297 | DISCO 144 FORI D.0,8 SP LM | DISK 144 HOLES D.0-8 SP LM | DISQUE 144 TROUS D. 0-8 SP LM | SCHEIBE 144 LTCHER D.0-8 SP LM | DISCO 144 ORIFICIOS D.0-8 SP L |
| 42 | 22230298 | DISCO 20 FORI D.0,8 SP LM | DISK 20 HOLES D.0-8 SP LM | DISQUE 20 TROUS D. 0-8 SP LM | SCHEIBE 20 LTCHER D.0-8 SP LM | DISCO 20 ORIFICIOS D.0-8 SP LM |
| 43 | 22230299 | DISCO 52 FORI D.2,5 SP LM | DISK 52 HOLES D.2-5 SP LM | DISQUE 52 TROUS D. 2-5 SP LM | SCHEIBE 52 LTCHER D.2-5 SP LM | DISCO 52 ORIFICIOS D.2-5 SP LM |
| 44 | 22230300 | DISCO POST.10G-3F-D2,1 SP LM | DISK POST.10G-3F-D2-1 SP LM | DISQUE ARRIERE 10G. 3 TROUS D2 | HINTERSCHEIBE 10G-3L-D2-1 SP L | DISCO TRAS.10G. 3 ORIF. D2-1 S |
| 45 | 22230301 | DISCO 144 FORI D.0,5 SP LM | DISK 144 HOLES D.0-5 SP LM | DISQUE 144 TROUS D. 0-5 SP LM | SCHEIBE 144 LTCHER D.0-5 SP LM | DISCO 144 ORIFICIOS D.0-5 SP L |
| 46 | 22230303 | DISCO 26 FORI D.5,0 SP LM | DISK 26 HOLES D.5-0 SP LM | DISQUE 26 TROUS D. 5-0 SP LM | SCHEIBE 26 LTCHER D.5-0 SP LM | DISCO 26 ORIFICIOS D.5-0 SP LM |
| 47 | 22230304 | DISCO 36 FORI D.7 LM | DISK 36 HOLES D.7 LM | DISQUE 36 TROUS D. 7 LM | SCHEIBE 36 LTCHER D.7 LM | DISCO 36 ORIFICIOS D.7 LM |
| 48 | 22230306 | DISCO 12 FORI D.2,1 SP LM | DISK 12 HOLES D.2-1 SP LM | DISQUE 12 TROUS D. 2-1 SP LM | SCHEIBE 12 LTCHER D.2-1 SP LM | DISCO 12 ORIFICIOS D.2-1 SP LM |
| 49 | 22230316 | DISCO 52 FORI D.3,5 SP LM | DISC 52 HOLES D.3-5 SP LM | DISQUE 52 TROUS D. 3-5 SP LM | SCHEIBE 52 LTCHER D.3-5 SP LM | DISCO 52 ORIFICIOS D.3-5 SP LM |
| 50 | 22230317 | DISCO 36 FORI D.1,1 SP LM | DISK 36 HOLES D.1-1 SP LM | DISQUE 36 TROUS D. 1-1 SP LM | SCHEIBE 36 LTCHER D.1-1 SP LM | DISCO 36 ORIFICIOS D.1-1 SP LM |
| 51 | 22230318 | DISCO 10 FORI D.1,5 SP LM | DISK 10 HOLES D.1-5 SP LM | DISQUE 10 TROUS D. 1-5 SP LM | SCHEIBE 10 LTCHER D.1-5 SP LM | DISCO 10 ORIFICIOS D.1-5 SP LM |
| 52 | 22230319 | DISCO 20 FORI D.1,0 SP LM | DISK 20 HOLES D.1-0 SP LM | DISQUE 20 TROUS D. 1-0 SP LM | SCHEIBE 20 LTCHER D.1-0 SP LM | DISCO 20 ORIFICIOS D.1-0 SP LM |
| 53 | 22230320 | DISCO 20 FORI D.1,5 SP LM | DISK 20 HOLES D.1-5 SP LM | DISQUE 20 TROUS D. 1-5 SP LM | SCHEIBE 20 LTCHER D.1-5 SP LM | DISCO 20 ORIFICIOS D.1-5 SP LM |
| 54 | 22230321 | DISCO 52 FORI D.1,5 SP LM | DISK 52 HOLES D.1-5 SP LM | DISQUE 52 TROUS D. 1-5 SP LM | SCHEIBE 52 LTCHER D.1-5 SP LM | DISCO 52 ORIFICIOS D.1-5 SP LM |
| 55 | 22230322 | DISCO 80 FORI D.1,5 SP LM | DISK 80 HOLES D.1-5 SP LM | DISQUE 80 TROUS D. 1-5 SP LM | SCHEIBE 80 LTCHER D.1-5 SP LM | DISCO 80 ORIFICIOS D.1-5 SP LM |
| 56 | 22230323 | DISCO 100 FORI D.1,5 SP LM | DISK 100 HOLES D.1-5 SP LM | DISQUE 100 TROUS D. 1-5 SP LM | SCHEIBE 100 LTCHER D.1-5 SP LM | DISCO 100 ORIFICIOS D.1-5 SP L |
| 57 | 22230324 | DISCO 120 FORI D.1,5 SP LM | DISK 120 HOLES D.1-5 SP LM | DISQUE 120 TROUS D. 1-5 SP LM | SCHEIBE 120 LTCHER D.1-5 SP LM | DISCO 120 ORIFICIOS D.1-5 SP L |
| 58 | 22230325 | DISCO 160 FORI D.1,5 SP LM | DISK 160 HOLES D.1-5 SP LM | DISQUE 160 TROUS D. 1-5 SP LM | SCHEIBE 160 LTCHER D.1-5 SP LM | DISCO 160 ORIFICIOS D.1-5 SP L |
| 59 | 22230326 | DISCO 180 FORI D.1,5 SP LM | DISK 180 HOLES D.1-5 SP LM | DISQUE 180 TROUS D. 1-5 SP LM | SCHEIBE 180 LTCHER D.1-5 SP LM | DISCO 180 ORIFICIOS D.1-5 SP L |
| 60 | 22230327 | DISCO 20 FORI D.1,1 SP LM | DISK 20 HOLES D.1-1 SP LM | DISQUE 20 TROUS D. 1-1 SP LM | SCHEIBE 20 LTCHER D.1-1 SP LM | DISCO 20 ORIFICIOS D.1-1 SP LM |
| 61 | 22230328 | DISCO 52 FORI D.2,1 SP LM | DISK 2 HOLES D.2-1 SP LM | DISQUE 52 TROUS D. 2-1 SP LM | SCHEIBE 52 LTCHER D.2-1 SP LM | DISCO 52 ORIFICIOS D.2-1 SP LM |
| 62 | 22230332 | DISCO 13 FORI D.3,5 SP LM | DISK 13 HOLES D.3.5 SP LM | DISQUE 13 TROUS D.3-5 SP LM | SCHEIBE 13 LTCHER D.3-5 SP LM | DISCO 13 ORIFICIOS D.3-5 SP |

TAV. 66/83

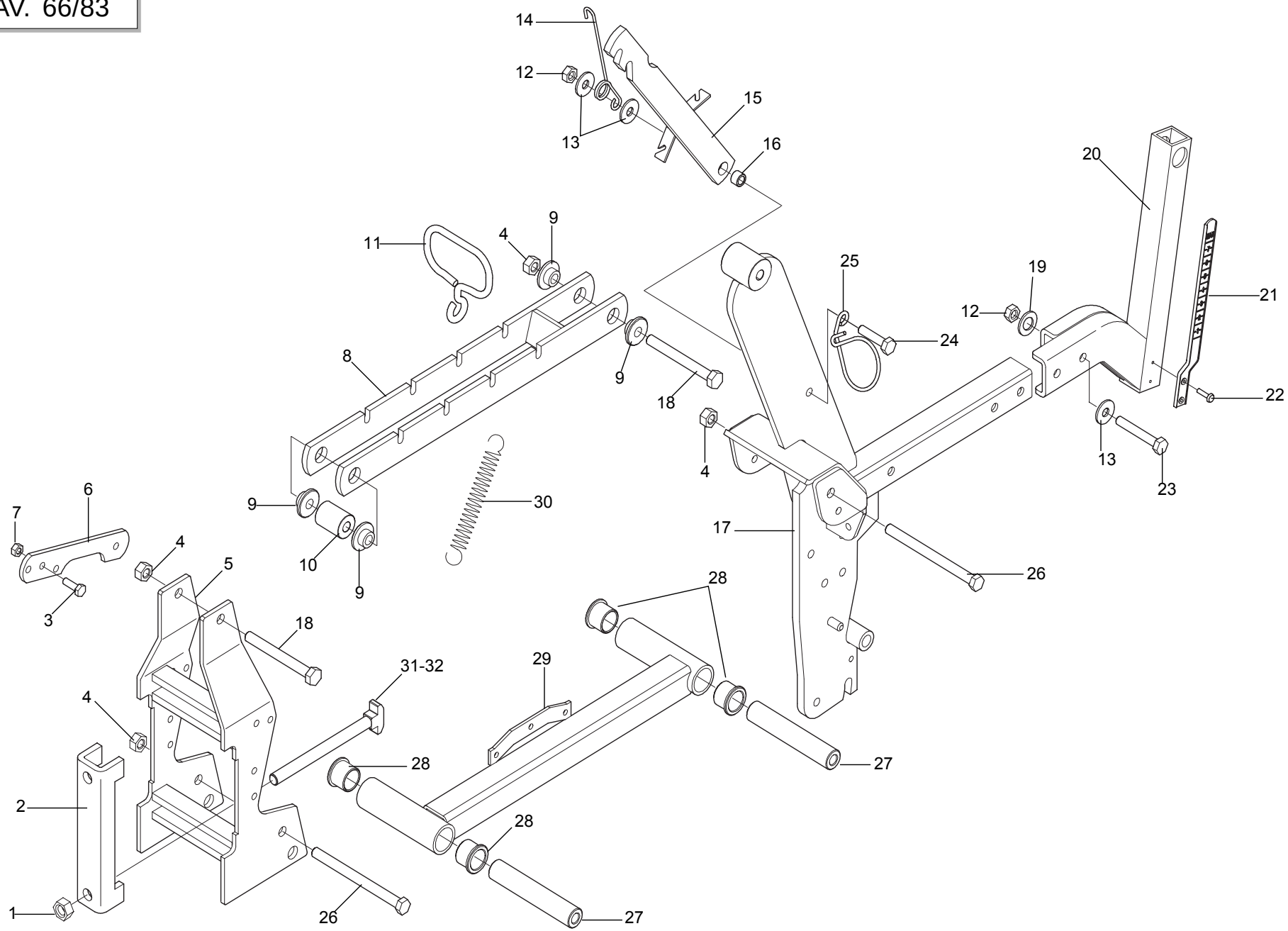




GASPARDO

## *TELAIO ELEMENTO*

TAV. 66/83

| Pos. | Cod. | Descrizione | Description | Description | Benennung | Descripcion |
|---|---|---|---|---|---|---|
| 1 | F01200306 | DADO 14 5588 6.8 ZN | NUT 14 UNI 5588 6.8 GALVANIZED | ECROU 14 UNI 5588 6.8 ZN | MUTTER 14 UNI 5588 6.8 ZN | TUERCA 14 UNI 5588 6.8 ZN |
| 2 | 15110091 | SCONTRO A U | STRIKER | BRIDE 150 MM | ANSCHLAG | ELEMENTO DE EMPALME |
| 3 | F01020440 | VITE 8 X25 5739 8.G ZN | BOLT 8X25 5739 8.G GALVANIZED | VIS 8X25 5739 8.G ZN | SCHRAUBE 8X25 5739 8.G ZN | TORNILLO 8X25 5739 8.G ZN |
| 4 | F01220244 | DADO TRISTOP M12 | NUT- TRISTOP M12 | ECROU TRISTOP M12 | MUTTER TRISTOP M12 | TUERCA TRISTOP M12 |
| 5 | 15421111 | PIASTRA ATTACCO 150 | COUPLING PLATE 150 | PLAQUE ATTELAGE 150 | KUPPLUNGSPLATTE 150 | PLACA CONEXIN 150 P |
| 6 | 16620130 | SUPPORTO SCATOLA RINVIO | SUPPORT BOITE DE RENVOI | GEARBOX SUPPORT | HALTERUNG VORGELEGEGEH-USE | SOPORTE CAJA TRANSMISI-N |
| 6 | 15422091 | SUPPORTO SCATOLA RINVIO | GEARBOX SUPPORT | SUPPORT BOITE DE RENVOI | HALTERUNG VORGELEGEGEH-USE | SOPORTE CAJA TRANSMISIËN |
| 7 | F01220222 | DADO TRISTOP M 8 | NUT- TRISTOP M 8 | ECROU TRISTOP M 8 | MUTTER TRISTOP M 8 | TUERCA TRISTOP M 8 |
| 8 | 15420102 | PARALLELO SUPERIORE | UPPER PARALLEL | PARALL. SUP. | PARALLELOGRAMM OBEN | PARALELO SUPERIOR |
| 9 | 15421232 | BOCCOLA BRACCIO PARALLELO SP.8 | ARM BUSHING PARALLEL SP.8 | BOITE BRAS PARALLELE SP.8 | BsCHSE ARM PARALLEL SP.8 | CASQUILLO BRAZO PARALELO SP.8 |
| 10 | 18802170 | BOCCOLA 12,25X30X40 ZN | BUSHING 12,25X30X40 ZN | BOITE 12,25X30X40 ZN | BsCHSE 12,25X30X40 ZN | CASQUILLO 12,25X30X40 ZN |
| 11 | 18903690 | ATTACCO MOLLA | SPRING COUPLING | FIXATION RESSORT | KUPPLUNG FEDER | CONEXIN MUELLE O |
| 12 | F01200270 | DADO 10 5588 6.8 ZN | SCREW 10 UNI 5588 6.8 GALVANIZ | ECROU 10 UNI 5588 6.8 ZN | MUTTER 10 UNI 5588 6.8 ZN | TUERCA 10 UNI 5588 6.8 ZN |
| 13 | F01420060 | ROND.PIANA 11X30X2,5 6593 ZN | FLAT WASHER 11X30X2-5 6593 ZN | ROND.PLATE 11X30X2-5 6593 ZN | SCHEIBE 11X30X2-5 6593 ZN | ARAND. PLANA 11X30X2-5 6593 ZN |
| 14 | 18902880 | MOLLA FERMO PARALLELO SP | PARALLEL STOP SPRING SP | RESSORT ARRET PARALLELE SP | FEDER FESTSTELLVORRICHT. PARAL | MUELLE BLOQUEO PARALELO SP |
| 15 | 16620160 | FERMO PARALLELO | PARALLEL LOCK | ARRET PARALLELOGRAMME | FESTSTELLVORRICHTUNG PARALLELO | BLOQUEO PARALELO |
| 16 | 18801610 | BOCCOLA 10,25X16 X11 ZN | BUSHING 10.25 X 16 X 11- GALVA | BOITE 10-25X16 X11 ZN | BsCHSE 10-25X16 X11 ZN | CASQUILLO 10-25X16 X11 ZN |
| 17 | 16620310 | CORPO CENTRALE SP540 | CENTRAL CASING SP540 | CORPS CENTRALE SP540 | MITTELKTRPER SP540 | CUERPO CENTRAL SP540 |
| 18 | F01020168 | VITE 12X90 5737 8.G ZN | BOLT 12X90 5737 8.G GALVANIZED | VIS 12X90 5737 8.G ZN | SCHRAUBE 12X90 5737 8.G ZN | TORNILLO 12X90 5737 8.G ZN |
| 19 | F01430023 | RONDELLA D10 DIN 6798 D.INT.ZN | WASHER D10 DIN 6798 D.INT.ZN | RONDELLE D10 DIN 6798 D. INT. | UNT. SCHEIBE D10 DIN 6798 D.IN | ARANDELA D10 DIN 6798 D.INT.ZN |
| 20 | 16620550 | SUPPORTO REGOLAZIONE | REGULATION SUPPORT | SUPPORT R+GLAGE | HALTERUNG EINSTELLUNG | SOPORTE REGULACIËN |
| 21 | 19003400 | ASTA INDICAZIONE PROFONDITA' | DEPTH INDICATING ROD | TIGE INDICATION PROFONDEUR | TIEFENANZEIGESTAB | VARILLA INDICACIÓN PROFUNDIDAD |
| 22 | F02250077 | RIVETTO A STRAPPO 3X14 ALL. | 3X14 ALUMINIUM PULL RIVET | RIVET A RUPTURE 3X14 ALUMINIUM | REISSNIETE3X14 ALL. | REMACHE DESGAR. 3X14 ALL. |
| 23 | F01020122 | VITE 10X70 5737 8.G ZN | BOLT10X70 5737 8.G GALVANIZED | VIS 10X70 5737 8.G ZN | SCHRAUBE 10X70 5737 8.G ZN | TORNILLO 10X70 5737 8.G ZN |
| 24 | F01020112 | VITE 10X45 5737 8.G ZN | BOLT 10X45 5737 8.G GALVANIZED | VIS 10X45 5737 8.G ZN | SCHRAUBE 10X45 5737 8.G ZN | TORNILLO 10X45 5737 8.G ZN |
| 25 | 18903140 | MOLLA GUIDATUBO | PIPE GUIDE SUPPORT | RESSORT GUIDE-TUBE | FEDER ROHRFsHRUNG | MUELLE GUA TUBOS A |
| 26 | F01020183 | VITE 12X170 5737 8.G ZN | BOLT 12X170 5737 8.G GALVANIZ. | VIS 12X170 5737 8.G ZN | SCHRAUBE 12X170 5737 8.G ZN | TORNILLO 12X170 5737 8.G ZN |
| 27 | 22230057 | MOZZO ANTERIORE | ANT. HUB | MOYEU AVANT | VORDERNABE | CUBO DELANTERO |
| 28 | 66349003 | BOCCOLA SINT. | BUSHING- SINTERED | BOITE FRITTEE | SYNTH. BUECHSE | CASQUILLO SINT. |
| 29 | 15420122 | BRACCIO INFERIORE | LOWER ARM | BRAS INFERIEUR | UNTERER ARM | BRAZO INFERIOR |
| 30 | 65337015 | MOLLA TRAZ.ZN REGOL.ELEM. SP | TRACTION SPRING ZN REGUL. ELEM | RESSORT TRACT. ZN REGL. ELEMEN | ZUGFEDER ZN ELEMENTEINSTELLUNG | MUELLE TRAC. ZN REGUL.ELEM. SP |
| 31 | 16610010 | VITE A MARTELLO M14X165 | WINGED SCREW M14X165 | VIS A TETE MARTEAU M14X165 | ZWEIFLÜGEL- SCHRAUBEN M14X165 | TORNILLO DE MARIPOSA M14X165 |
| 32 | 16610020 | VITE A MARTELLO M14X215 | WINGED SCREW M14X215 | VIS A TETE MARTEAU M14X215 | ZWEIFLÜGEL- SCHRAUBEN M14X215 | TORNILLO DE MARIPOSA M14X215 |

# TAV. 66/94

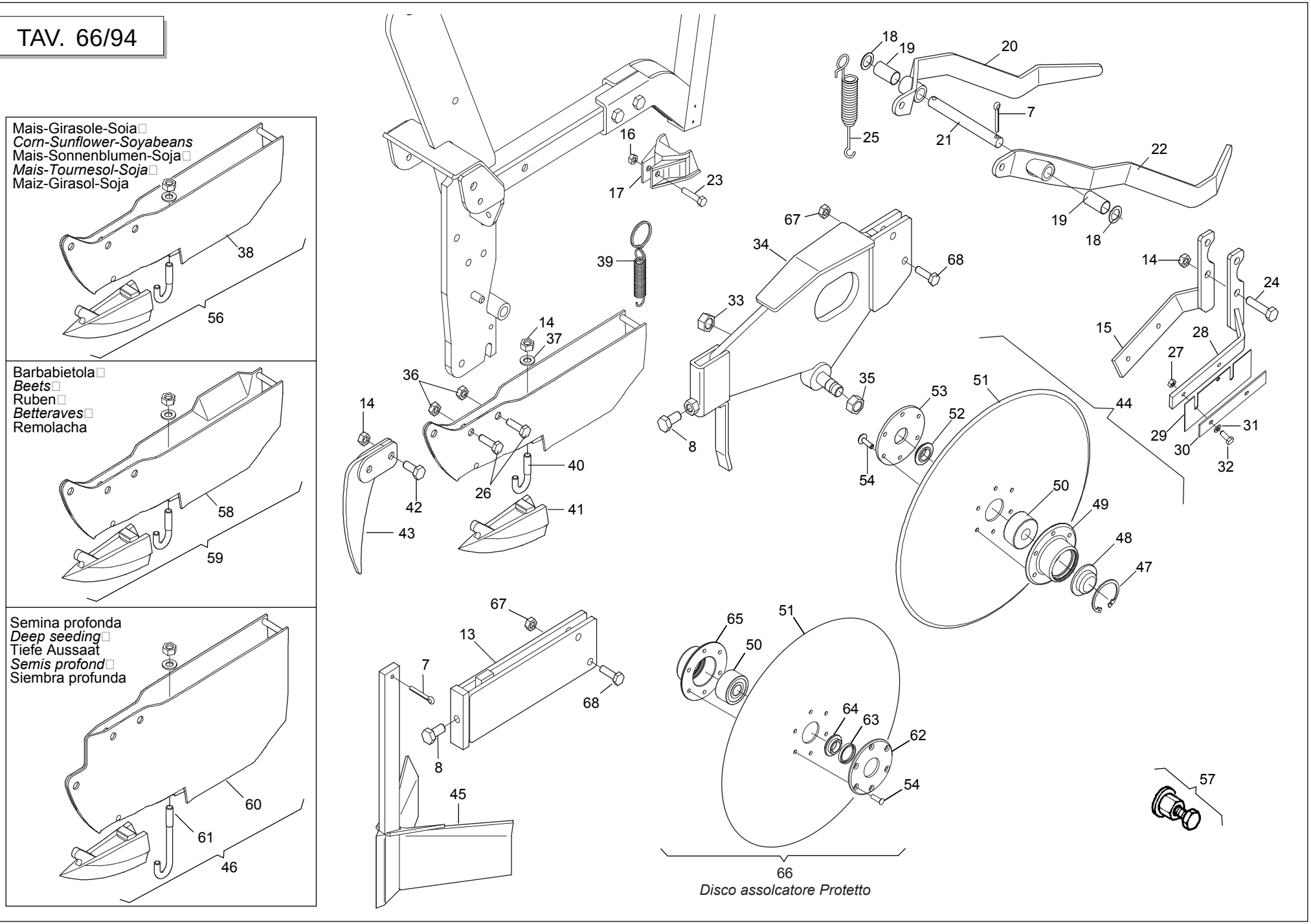




GASPARDO

## *ELEMENTI ASSOLCATORI*

TAV. 66/94

| Pos. | Cod. | Descrizione | Description | Description | Benennung | Descripcion |
|---|---|---|---|---|---|---|
| 1 | 65337015 | MOLLA TRAZ.ZN REGOL.ELEM. SP | TRACTION SPRING ZN REGUL. ELEM | RESSORT TRACT. ZN REGL. ELEMEN | ZUGFEDER ZN ELEMENTEINSTELLUNG | MUELLE TRAC. ZN REGUL.ELEM. SP |
| 2 | 18903690 | ATTACCO MOLLA | SPRING COUPLING | FIXATION RESSORT | KUPPLUNG FEDER | CONEXIN MUELLE O |
| 3 | 15422420 | ATTACCO MOLLA SPARTIZOLLE | SOD BREAKER SPRING COUPLING | FIXATION RESSORT ECART. MOTTES | FEDERANSCHLUSS KLOTENRZUMER | CONEXIN MUELLE DIVISOR TERRONO |
| 4 | F01220222 | DADO TRISTOP M 8 | NUT- TRISTOP M 8 | ECROU TRISTOP M 8 | MUTTER TRISTOP M 8 | TUERCA TRISTOP M 8 |
| 5 | 15422400 | ASSE SPARTIZOLLE MOBILE | MOBILE SOD BREAKER SPINDLE | AXE ECARTEUR MOTTES MOBILE | ACHSE MOBILER KLOTENRZUMER | EJE DIVISOR DE TERRONES MVIL A |
| 6 | 15422390 | SUPPORTO SPARTIZOLLE MOBILE | MOBILE SOD BREAKER SUPPORT | SUPP. ECARTEUR MOTTES MOBILE | HALTERUNG MOBILER KLOTENRZUMER | SOPORTE DIVISOR DE TERRONES MO |
| 7 | F02200227 | COPIGLIA 5 X30 1336 ZN | SPLIT PIN 5 X30 1336 GALVAN. | GOUPILLE 5 X30 1336 ZN | SPLINT 5 X30 1336 ZN | PASADOR 5 X30 1336 ZN |
| 8 | F01020510 | VITE 12X30 5739 8.G ZN | BOLT12X30 5739 8.G GALVANIZED | VIS 12X30 5739 8.G ZN | SCHRAUBE 12X30 5739 8.G ZN | TORNILLO 12X30 5739 8.G ZN |
| 9 | 15422410 | FERMO SPARTIZOLLE MOBILE | MOBILE SOD BREAKER STOP | ARRET ECARTEUR MOTTES MOBILE | FESTSTELLVOR. MOBILER KLOTENRZ | BLOQUEO DIVISOR DE TERRONES MO |
| 10 | 18800560 | BOCCOLA 8,25 X16 X7 | BUSHING 8.25 X 16 X 7 | BOITE 8-25 X16 X7 | BsCHSE 8-25 X16 X7 | CASQUILLO 8-25 X16 X7 |
| 11 | F01420048 | ROND.PIANA 9X 24X2 6593 ZN | FLAT WASHER 9X 24X2 6593 GALV. | ROND. PLATE 9X 24X2 6593 ZN | SCHEIBE 9X 24X2 6593 ZN | ARAND. PLANA 9X 24X2 6593 ZN |
| 12 | F01020063 | VITE 8 X35 5737 8.G ZN | BOLT 8 X35 5737 8.G GALVANIZED | VIS 8 X35 5737 8.G ZN | SCHRAUBE 8 X35 5737 8.G ZN | TORNILLO 8 X35 5737 8.G ZN |
| 13 | 15422281 | SUPPORTO SPARTIZOLLE | SOD-BREAKER SUPPORT | SUPPORT ECARTEUR DE MOTTES | HALTERUNG KLOTENRZUMER | SOPORTE DIVISOR DE TERRONES |
| 14 | F01200270 | DADO 10 5588 6.8 ZN | SCREW 10 UNI 5588 6.8 GALVANIZ | ECROU 10 UNI 5588 6.8 ZN | MUTTER 10 UNI 5588 6.8 ZN | TUERCA 10 UNI 5588 6.8 ZN |
| 15 | 15422211 | SUPP.RASCHIATERRA DISCHI DX | RIGHT SOIL SCRAPER DISC SUPP. | SUPP.RACLE-BOUE DISQUES DRT | HALTER.ERDSCHABER SCHEIBEN REC | SOP.RASCADOR TIERRA DISCOS DER |
| 16 | F01230022 | DADO AUTOB.NOR.6 ZN | NORM.SELF-LOCKING NUT 6 GALVAN | ECROU AUTOB.NOR.6 ZN | SELBSTSP. MUTTER NOR.6 ZN | TUERCA AUTOB. NOR. 6 ZN |
| 17 | 19002701 | PROTEZIONE FOTOCELLULA > | PHOTOCELL PROTECTION | PROTECT CAPT PHOTOC SP4 > | SCHUTZ PHOTOZELLE | PROTECCIN FOTOCLULA PR |
| 18 | 18701820 | RONDELLA 16,5X25X1,0 ZN | WASHER 16.5 X 25 X 1- GALVAN. | RONDELLE 16,5 X25 X1 ZN | UNTERLEGSCHEIBE 16,5 X25 X1 ZN | ARANDELA 16,5 X25 X1 ZN |
| 19 | F04150024 | BOCCOLA PAP 15X17X25 | PAP BUSH 15X17X25 | BOITE PAP 15X17X25 | BsCHSE PAP 15X17X25 | CASQUILLO PAP 15X17X25 |
| 20 | 15422752 | COPRISEME DX MAIS | RIGHT CORN SEED COVER | COUVRE-GRAINE MAIS DRT | SAMENABDECKER MAIS RE | CUBRESEMILLAS MAÍZ DER |
| 21 | 15421080 | ASSE COPRISEME ZN | SEED COVER SPINDLE ZN | AXE COUVRE-GRAINES | SAMENDECKACHSE ZN | EJE CUBRESEMILLA ZN |
| 22 | 15422772 | COPRISEME SX MAIS | LEFT CORN SEED COVER | COUVRE-GRAINE MAIS GCH | SAMENABDECKER MAIS LI | CUBRESEMILLAS MAÍZ IZQ |
| 23 | F01020408 | VITE 6 X30 5739 8.G ZN | BOLT 6X30 5739 8.G GALVANIZED | VIS 6X30 5739 8.G ZN | SCHRAUBE 6X30 5739 8.G ZN | TORNILLO 6X30 5739 8.G ZN |
| 24 | F01020110 | VITE 10X40 5737 8.G ZN | BOLT 10X40 5737 8.G GALVANIZED | VIS 10X40 5737 8.G ZN | SCHRAUBE 10X40 5737 8.G ZN | TORNILLO 10X40 5737 8.G ZN |
| 25 | 18903170 | MOLLA TRAZ.ZN RASCHIAT. SP530 | TRACTION SPRING ZN SCRAPER SP5 | RESSORT TRACT. ZN RACLEUR SP53 | ZUGFEDER ZN ABSCHABER SP530 | MUELLE TRAC. ZN RASCADOR SP530 |
| 26 | F01020476 | VITE 10X30 5739 8.G ZN | BOLT 10X30 5739 8.G GALVANIZED | VIS 10X30 5739 8.G ZN | SCHRAUBE 10X30 5739 8.G ZN | TORNILLO 10X30 5739 8.G ZN |
| 27 | F01200232 | DADO 6 5588 6.8 ZN | NUT 6 UNI 5588 6.8 GALVANIZED | ECROU 6 UNI 5588 6.8 ZN | MUTTER 6 UNI 5588 6.8 ZN | TUERCA 6 UNI 5588 6.8 ZN |
| 28 | 15422221 | SUPP.RASCHIATERRA DISCHI SX | LEFT SOIL SCRAPER DISC SUPP. | SUPP.RACLE-BOUE DISQUES GCH | HALTER.ERDSCHABER SCHEIBEN LIN | SOP.RASCADOR TIERRA DISCOS IZQ |
| 29 | 15422230 | RASCHIATERRA DISCO | DISK SOIL-SCRAPER | RACLEUR DISQUE | ERDSCHABER SCHEIBE | RASCADOR DISCO |
| 30 | 15423400 | DISTANZIALE | SPACER | ENTRETOISE | DISTANZSTsCK | DISTANZSTsCK |
| 31 | F01420036 | ROND.PIANA 6,6X 18X2 6593 ZN | FLAT WASHER 6-6X 18X2 6593 ZN | ROND. PLATE 6-6X 18X2 6593 ZN | SCHEIBE 6-6X 18X2 6593 ZN | ARAND. PLANA 6-6X 18X2 6593 ZN |
| 32 | F01020403 | VITE 6 X16 5739 8.G ZN | BOLT 6X16 5739 8.G GALVANIZED | VIS 6X16 5739 8.G ZN | SCHRAUBE 6X16 5739 8.G ZN | TORNILLO 6X16 5739 8.G ZN |
| 33 | F01200442 | DADO 16X1,5 5589 6.8 ZN | NUT 16X1-5 UNI 5589 6.8 GALVAN | ECROU 16X1-5 UNI 5589 6.8 ZN | MUTTER 16X1-5 UNI 5589 6.8 ZN | TUERCA 16X1-5 UNI 5589 6.8 ZN |
| 34 | 15422361 | SUPPORTO DISCHI | DISKS SUPPORT | SUPPORT DISQUES | SCHEIBENHALTERUNG | SOPORTES DISCOS |
| 35 | 15220540 | DADO M16X1,5 SX | NUT M16X1-5 LEFT | ECROU M16X1-5 GCH | MUTTER M16X1-5 LI | TUERCA M16X1-5 IZQ |
| 36 | F01220233 | DADO TRISTOP M10 | NUT TRISTOP M10 | ECROU TRISTOP M10 | MUTTER TRISTOP M10 | TUERCA TRISTOP M10 |
| 37 | F01430023 | RONDELLA D10 DIN 6798 D.INT.ZN | WASHER D10 DIN 6798 D.INT.ZN | RONDELLE D10 DIN 6798 D. INT. | UNT. SCHEIBE D10 DIN 6798 D.IN | ARANDELA D10 DIN 6798 D.INT.ZN |
| 38 | 15420713 | LAMIERE FALCIONE MAIS SP540 | MAIZE COULTER SHEET SP540 | TÈLES SOC MA¤S SP540 | BLECHE S-SCHAR MAIS SP540 | CHAPAS BOTA MA-Z SP540 |
| 39 | 18902481 | MOLLA TRAZIONE AGG.FALCIONE | COULTER HOOK-UP TRACT. SPRING | RESSORT TRACTION FIX. SOC | ZUGFEDER KUPPL. SÄSCHAR | MUELLE TRACCIÓN CONEX. BOTA |
| 40 | 22270428 | GANCIO TAGLIENTE SP/S | HOOK - CUTTER SP/S | CROCHET HACHOIR SP/S | HAKEN SZSCHAR SP/S | GANCHO GUADA¾ADORA SP/S |
| 41 | 22270397 | TAGLIENTE FALCIONE MAIS SP/S | CORN CUTTER EDGE SP/S | POINTE DE SOC MAIS SP520/540 | SCHARSCHNEIDE MAIS SP/S | FILO DE CORTE. GUADA¾AD. MAIZ |
| 42 | F01020472 | VITE 10X25 5739 8.G ZN | BOLT 10X25 5739 8.G GALVANIZED | VIS 10X25 5739 8.G ZN | SCHRAUBE 10X25 5739 8.G ZN | TORNILLO 10X25 5739 8.G ZN |
| 43 | 15423390 | PROLUNGA FALCIONE | COULTER EXTENSION | RALLONGE SOC | VERLÄNGERUNG SÄSCHAR | PROLONGACIÓN BOTA |
| 44 | 22505131 | DISCO ASSOLC.COMPL.MT | FURROW OPENER DISK ASSY. | DISQUE D370 MT A/MOY-ROUL-BOUC | SCHEIBE SZSCHARENREISSER KOMPL | DISCO SURCADOR COMPL.MT |
| 45 | 15420852 | ASS.SPIANATERRA | GROUND LEVELLER | CHASSE MOTTE SP540 | EINHEIT ERDEBNER | APLANADORA DE TIERRA |
| 46 | 16620231 | FALCIONE SEMINA PROFONDA | DEEP SEEDING COULTER | SOC SEMIS PROFOND | S-SCHAR TIEFE SAAT | BOTA SIEMBRA PROFUNDA |
| 47 | F02050631 | ANELLO ARR.47 UNI 7437-75 | STOP RING 47 UNI 7437-75 | BAGUE ARRET 47 UNI 7437-75 | RING 47 UNI 7437-75 | ANILLO PARADA 47 UNI 7437-75 |
| 48 | 66248248 | TAPPO IN PLASTICA | PLASTIC PLUG | BOUCHON EN PLASTIQUE | PLASTIKPFROPFEN | TAPN DE PLæSTICO D |
| 49 | 15223651 | SUPPORTO CUSCINETTO DISCO | DISK BEARING SUPPORT | SUPPORT PALIER DISQUE | SCHEIBENLAGERBsCHSE | SOPORTE COJINETE DISCO |
| 50 | F04010084 | CUSCINETTO 3303 2RS | BEARING 3303 2RS | PALIER 3303 2RS | LAGER 3303 2RS | COJINETE 3303 2RS |
| 51 | 13825091 | DISCO ASSOLCATORE D.373 | FURROW OPENER DISK D.373 | DISQUE D. 373 6 T.D.6 | SCHEIBE SZSCHARENREISSER D.373 | DISCO SURCADOR D.373 |
| 52 | 13825081 | BOCCOLA PARAPOLVERE DISCO | DISC DUST SEAL BUSH | DOUILLE PARE-POUSSI+RE DISQUE | BUCHSE STAUBABDECKUNG SCHEIBE | MANGUITO GUARDAPOLVO DISCO |
| 53 | 15421761 | FLANGIA INTERNA DISCO | INNER DISK FLANGE | BRIDE INT. DISQUE | INNENFLANSCH SCHEIBE | BRIDA INTERIOR DISCO |
| 54 | F02250520 | CONF.RIBATTINI TSC 6 X19,8 KG | PACK BLAD.MOUNT.TSC 6 X19-8 KG | PAQUET RIVETS TSC 6 X19-8 KG | PACKUNG NIETEN TSC 6 X19-8 KG | PAQU. DE REMACHES TSC 6 X19-8 |
| 55 | F01020481 | VITE 10X40 5739 8.G ZN | BOLT 10X40 5739 8.G GALVANIZED | VIS 10X40 5739 8.G ZN | SCHRAUBE 10X40 5739 8.G ZN | TORNILLO 10X40 5739 8.G ZN |
| 56 | 15420734 | FALCIONE MAIS COMPL. DORADA | CORN CUTTER ASSY. | SOC MAIS COMPLET SP540 | SZSCHAR MAIS KOMPL. | GUADANADORA MAIZ COMPL. |
| 57 | 15225240 | ESTRATTORE DISCHI ELEMENTO MT | SEED PLATE EXTRACTOR ELEM. MT | EXTRACTEUR DISQUE ELEMENT MT | SCHEIBENAUSZIEHER ELEMENT MT | EXTRACTOR DISCOS ELEMENTO MT |
| 58 | 16620240 | SUPPORTO FALCIONE ARACHIDI | SUPPORT PEANUT CUTTER | SUPPORT HACHOIR ARACHIDES | HALTERUNG SZSCHAR ERDN_SSE | SOPORTE GUADA¥ADORA CACAHUETE |
| 59 | 16620260 | FALCIONE ARACHIDI COMPL.SP540 | COMPL. PEANUT COULTER SP540 | HACHOIR ARACHIDES COMPL.SP540 | S-SCHAR ERDN_SSE KOMPL.SP540 | BOTA CACAHUETES COMPL. SP540 |
| 60 | 16620181 | SUPPORTO FALCIONE SEMINA PROF. | CUTTER SUPPORT ASS. DEEP SEEDI | SUPPORT DE SOC SEMIS PROFOND | HALTERUNG SZSCHAR TIEFE AUSSA | CONJ. SOPORTE GUAD. SIEMBRA PR |
| 61 | 16620220 | GANCIO TAGLIENTE SEM.PROFONDA | HOOK - CUTTER DEEP SEEDING | CROCHET HACHOIR SEMIS PROFOND | HAKEN SZSCHAR TIEFE AUSSAAT | GANCHO FILO DE CORTE SIEMBRA P |
| 62 | 15225480 | FLANGIA INT.DISCO PROTTETTO ZN | INNER DISK FLANGE | BRIDE INT. DISQUE | INNENFLANSCH SCHEIBE | BRIDA INTERIOR DISCO |
| 63 | F03011075 | ANELLO DI TENUTA G24X32X4 | SEALING RING G24X32X4 | BAGUE D'ETANCHEITE G24X32X4 | DICHTRING G24X32X4 | ANILLO AISLADOR G24X32X4 |
| 64 | 15225490 | BOCCOLA PARAP.DISCO PROTETTO | BUSHING PARAP.DISCO PROTETTO | BOITE PARAP.DISCO PROTETTO | BUCHSE PARAP.DISCO PROTETTO | MANGUITO PARAP.DISCO PROTETTO |
| 65 | 15223651 | SUPPORTO CUSCINETTO DISCO | DISK BEARING SUPPORT | SUPPORT PALIER DISQUE | SCHEIBENLAGERBsCHSE | SOPORTE COJINETE DISCO |
| 66 | 15225500 | DISCO ASSOLC.PROTETTO COMPL. | COMPL. PROTECTED DISC COULTER | DISQUE DU SOC PROT+G+ COMPLET | GESCH_TZTE FURCHENFORMSCHEIBE | DISCO SURC.PROTEGIDO COMPL. |
| 67 | F01200416 | DADO 10 5589 6.8 ZN | NUT 10 UNI5589 6.8 GALVANIZED | ECROU 10 UNI 5589 6.8 ZN | MUTTER 10 UNI 5589 6.8 ZN | TUERCA 10 UNI 5589 6.8 ZN |
| 68 | F01020479 | VITE 10X35 5739 8.G ZN | BOLT 10X35 5739 8.G GALVANIZED | VIS 10X35 5739 8.G ZN | SCHRAUBE 10X35 5739 8.G ZN | TORNILLO 10X35 5739 8.G ZN |

TAV. 66/102

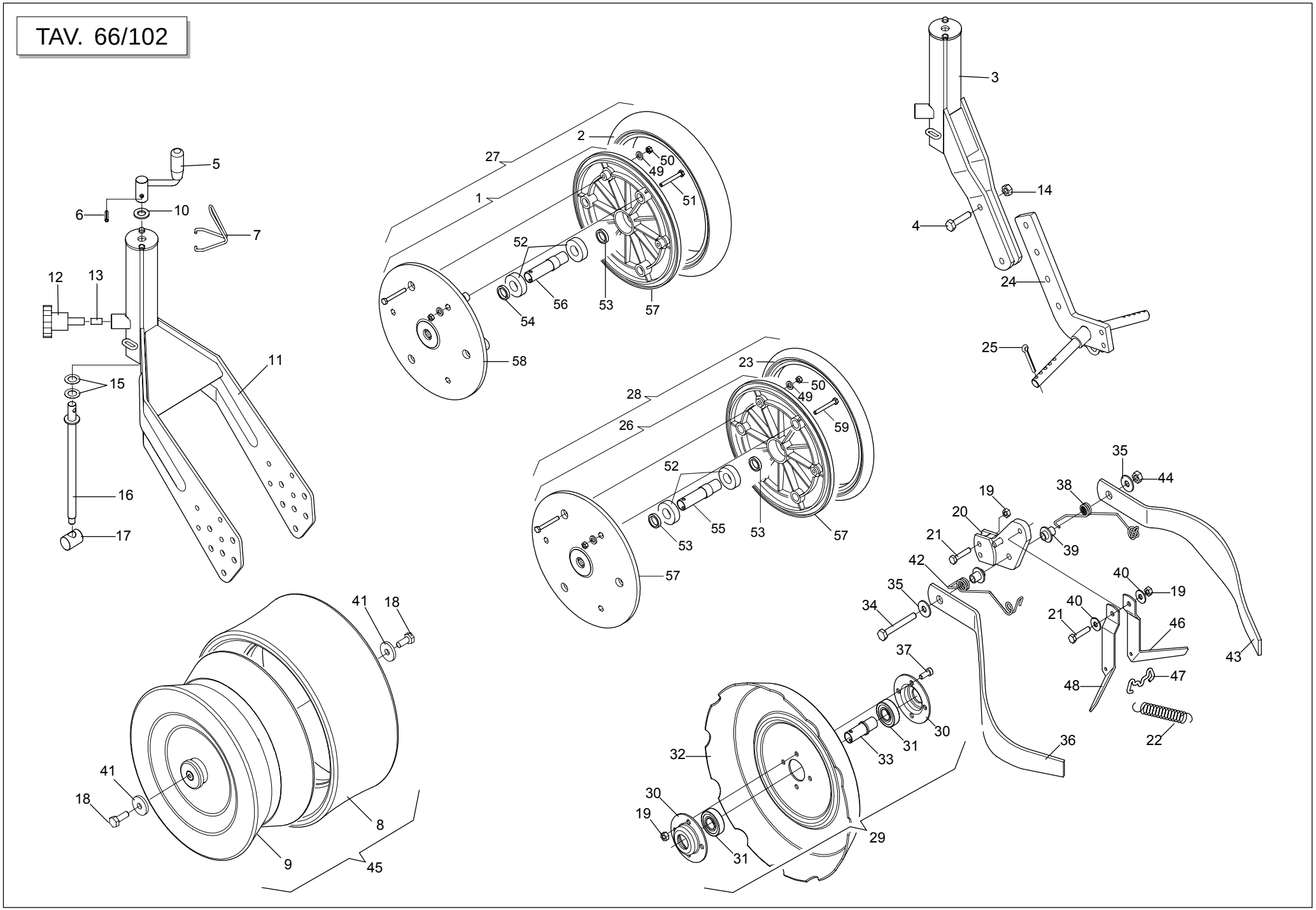




GASPARDO

## *RUOTE DI COMPRESSIONE*

TAV. 66/102

| Pos. | Cod. | Descrizione | Description | Description | Benennung | Descripcion |
|---|---|---|---|---|---|---|
| 1 | F06120050 | CERCHIO PLA. 2" COMPLETO | COMPLETE PLASTIC RIM | JANTE PLAST. COMPLET | FELGE PLA. KOMPL. | ARO PL-ST. COMPLETO |
| 2 | F06120165 | COPERTURA 2' X 13' | COVERING 2' X 13' | COUVERT FARMF ROUE COMPR 2"X13 | MANTEL 2' X 13' | CUBIERTA 2' X 13' |
| 3 | 15420913 | SUPPORTO RUOTE A V | V-WHEEL SUPPORT | SUPPORT ROUES EN V | V RADER HALTERUNG | SOPORTE RUEDAS A V |
| 4 | F01020481 | VITE 10X40 5739 8.G ZN | BOLT 10X40 5739 8.G GALVANIZED | VIS 10X40 5739 8.G ZN | SCHRAUBE 10X40 5739 8.G ZN | TORNILLO 10X40 5739 8.G ZN |
| 5 | 22270235 | MANIGLIA REGOLAZIONE B4 | ADJUSTMENT HANDLE B4 | POIGNEE REGLAGE B4 | EINSTELLGRIFF B4 | MANIJA REGULACIN B4 M |
| 6 | F02100109 | SPINA EL.6 X24 DIN 1481 | PIN EL. .6 X24 DIN 1481 | FICHE EL. 6 X24 DIN 1481 | SPANNSTIFT 6 X24 DIN 1481 | CLAVIJA EL.6 X24 DIN 1481 |
| 7 | 65336100 | MOLLA SPEC.FERMO MANIGLIA SP | SPEC SPRING HANDLE STOP SP | RESSORT SPEC. ARRET POIGNEE SP | SPEZIALFEDER GRIFFSPERRE SP | MUELLE ESPEC. BLOQUEO MANIJA S |
| 8 | F06120155 | COPERTURA FARMF.370X165 'A' | COVERING FARMF.370X165 'A' | COUVERTURE FARMF. 370X165 'A' | MANTEL FARMF.370X165 'A' | CUBIERTA FARMF.370X165 'A' |
| 9 | F06120022 | CERCHIO FARMF.370X165 COMPL. | FARMFLEX RING 370X165 ASSY. | JANTE FARMF. 370X165 COMPL. | REIFEN FARMF.370X165 KOMPL. | LLANTA FARMF.370X165 COMPL. |
| 10 | F01410088 | RONDELLA D14 UNI 6592 ZN | WASHER D14 UNI 6592 GALVANIZED | RONDELLE D14 UNI 6592 ZN | UNTERLEGSCHEIBE D14 UNI 6592 Z | ARANDELA D14 UNI 6592 ZN |
| 11 | 15421633 | SUPPORTO RUOTE | WHEEL SUPPORT | SUPPORT ROUES | RZDERHALTERUNG | SOPORTE RUEDAS |
| 12 | F06220013 | VOLANT.8L.PERN.M12X30-40 VPA55 | 8-LOBE PIN HANDWHEEL M12X30-40 | VOLANT 8 LOBES PIVOT M12X30-40 | HANDRAD.8L.ZAPFENM12X30-40 VPA | VOLDEL.8L.PERN.M12X30-40 VPA55 |
| 13 | 14820991 | FERMO REGOLAZIONE | ADJUSTMENT STOP | BUTEE REGLAGE | EINSTELLUNGSSPERRE | BLOQUEO REGULACIËN |
| 14 | F01200270 | DADO 10 5588 6.8 ZN | SCREW 10 UNI 5588 6.8 GALVANIZ | ECROU 10 UNI 5588 6.8 ZN | MUTTER 10 UNI 5588 6.8 ZN | TUERCA 10 UNI 5588 6.8 ZN |
| 15 | 22220073 | RONDELLA 28X0,3X16,5 | WASHER 28X0-3X16-5 | RONDELLE 28X0-3X16-5 | UNTERLEGSCHEIBE 28X0-3X16-5 | ARANDELA 28X0-3X16-5 |
| 16 | 22230062 | VITE DI REGOLAZIONE | ADJUSTMENT BOLT | VIS DE REGLAGE | EINSTELLSCHRAUBE | TORNILLO DE REGULACIN S |
| 17 | 22230063 | ELEMENTO ARTICOLATO | ARTICULATED ELEMENT | ELEMENT ARTICULE | GELENKELEMENT | ELEMENTO ARTICULADO |
| 18 | F01020476 | VITE 10X30 5739 8.G ZN | BOLT 10X30 5739 8.G GALVANIZED | VIS 10X30 5739 8.G ZN | SCHRAUBE 10X30 5739 8.G ZN | TORNILLO 10X30 5739 8.G ZN |
| 19 | F01220222 | DADO TRISTOP M 8 | NUT- TRISTOP M 8 | ECROU TRISTOP M 8 | MUTTER TRISTOP M 8 | TUERCA TRISTOP M 8 |
| 20 | 15423460 | ATTACCO COPRISEME RASCHIATERRA | SOIL SCRAPER SEED COV.LINKAGE | FIXATION COUVRE-GRAINES RACLEU | KUPPLUNG SAMENABDEC.ERDSCHABER | CONEXIÓN CUBRESEM.RASCADOR TI. |
| 21 | F01020449 | VITE 8 X35 5739 8.G ZN | BOLT 8X35 5739 8.G GALVANIZED | VIS 8X35 5739 8.G ZN | SCHRAUBE 8X35 5739 8.G ZN | TORNILLO 8X35 5739 8.G ZN |
| 22 | 65337028 | MOLLA TRAZ.ZN SUPP.RUOTA SV | TRACTION SPRING ZN WHEEL SUPP. | RESSORT TRACT. ZN SUPPORT ROUE | ZUGFEDER ZN RADHALTERUNG SV | MUELLE TRAC. ZN SOPORTE RUEDA |
| 23 | F06120181 | ANELLO IN GOMMA 1 POLLICE MT | COVERING FARMF.R.COMPR.MT | COUVERT FARMF ROUE COMPR 1"X12 | MANTEL FARMF.R.DRUCK .MT | CUBIERTA FARMF. R. COMPR. MT |
| 24 | 15423840 | REGOLAZIONE RUOTE | WHEEL ADJUSTMENT | REGLAGE ROUES | RADEINSTELLUNG | REGULACIÓN RUEDAS |
| 25 | F02200227 | COPIGLIA 5 X30 1336 ZN | SPLIT PIN 5 X30 1336 GALVAN. | GOUPILLE 5 X30 1336 ZN | SPLINT 5 X30 1336 ZN | PASADOR 5 X30 1336 ZN |
| 26 | F06120051 | CERCHIO PLA. 1" COMPLETO | COMPLETE PLASTIC RIM | JANTE PLAST. COMPLET | FELGE PLA. KOMPL. | ARO PL-ST. COMPLETO |
| 27 | F06120075 | RUOTA DA 2 POLLICI MT | RUBBERIZED WHEEL | ROUE CAOUTCHOUTEE | GUMMIRAD | RUEDA DE CAUCHO |
| 28 | F06120076 | RUOTA DA 1 POLLICE MT | RUBBERIZED WHEEL | ROUE CAOUTCHOUTEE | GUMMIRAD | RUEDA DE CAUCHO |
| 29 | 15423860 | RUOTA POSTERIORE COMPL. | REAR WHEEL ASSY | ROUE POSTERIEURE COMPL. | HINTERES RAD KOMPLETT | RUEDA TRASERA COMPL. |
| 30 | 16242190 | SUPPORTO CUSCINETTO | BEARING SUPPORT | SUPPORT PALIER | LAGERBsCHSE | SOPORTE COJINETE |
| 31 | F04010164 | CUSCINETTO 6204 2RS | BEARING 6204 2RS | ROULEMENT 6204 2RS | LAGER 6204 2RS | COJINETE 6204 2RS |
| 32 | 14820871 | RUOTA POSTERIORE FERRO | REAR IRON WHEEL | ROUE ARRIERE FER | EISENHINTERRAD | RUEDA TRAS. HIERRO |
| 33 | 15423850 | BOCCOLA RUOTA FERRO | STEEL WHEEL BUSH | DOUILLE ROUE FER | BÜCHSE EISENRAD | BUJE RUEDA DE HIERRO |
| 34 | F01020128 | VITE 10X80 5737 8.G ZN | BOLT 10X80 5737 8.G GALVANIZED | VIS 10X80 5737 8.G ZN | SCHRAUBE 10X80 5737 8.G ZN | TORNILLO 10X80 5737 8.G ZN |
| 35 | F01420060 | ROND.PIANA 11X30X2,5 6593 ZN | FLAT WASHER 11X30X2-5 6593 ZN | ROND.PLATE 11X30X2-5 6593 ZN | SCHEIBE 11X30X2-5 6593 ZN | ARAND. PLANA 11X30X2-5 6593 ZN |
| 36 | 10120621 | COPRISEME SX | LEFT SEED COVER | COUVRE-GRAINES GHT. | LINKER SAMENABDECKER | CUBRESEMILLA IZQ. |
| 37 | F01040091 | VITE 8 X20 5931 8.G ZN | SCREW 8 X20 5931 8.G ZN | VIS 8 X20 5931 8.G ZN | SCHRAUBE 8 X20 5931 8.G ZN | TORNILLO 8 X20 5931 8.G ZN |
| 38 | 18902910 | MOLLA COPRISEME DX SP | RIGHT SEED COVER SPRING SP | RESSORT COUVRE-GRAINE DRT SP | FEDER SAMENABDECKER RE SP | MUELLE CUBRESEMILLAS DER SP |
| 39 | 15422500 | BOCCOLA SUPP.MOLLA COPRISEMI | SEED COVER SPRING SUPPORT BUSH | BOITE SUPP. RESSORT COUVRE-GR. | BsCHSE HALTERUNG FEDERSAMENABD | CASQUILLO SUPER.MUELLE CUBRESE |
| 40 | F01420048 | ROND.PIANA 9X 24X2 6593 ZN | FLAT WASHER 9X 24X2 6593 GALV. | ROND. PLATE 9X 24X2 6593 ZN | SCHEIBE 9X 24X2 6593 ZN | ARAND. PLANA 9X 24X2 6593 ZN |
| 41 | 18701140 | RONDELLA 11 X35 X5 | WASHER 11 X 35 X 5 | RONDELLE 11 X35 X5 | UNTERLEGSCHEIBE 11 X35 X5 | ARANDELA 11 X35 X5 |
| 42 | 18902920 | MOLLA COPRISEME SX SP | LEFT SEED COVER SPRING SP | RESSORT COUVRE-GRAINE GCH SP | FEDER SAMENABDECKER LI SP | MUELLE CUBRESEMILLAS IZQ SP |
| 43 | 10120611 | COPRISEME DX | RIGHT SEED COVER | COUVRE-GRAINES DRT. | RECHTER SAMENABDECKER | CUBRESEMILLA DER. |
| 44 | F01220233 | DADO TRISTOP M10 | NUT TRISTOP M10 | ECROU TRISTOP M10 | MUTTER TRISTOP M10 | TUERCA TRISTOP M10 |
| 45 | 14821590 | RUOTA FARMFLEX 370X165 PROF.A | FARMFLEX WHEEL 370X165 DEPTH.A | ROUE FARMFLEX 370X165 PROF.A | RAD FARMFLEX 370X165PROF.A | RUEDA FARMFLEX |
| 46 | 15422481 | RASCHIATERRA DX RUOTE A V | RIGHT 'V' WHEEL SOIL SCRAPER | RACLEUR DRT ROUES EN 'V' | ERDSCHABER RE 'V'-FTRMIGE RZDE | RASCADOR TIERRA DER RUEDAS EN |
| 47 | 18902930 | AGGANCIO RASCHIATERRA | SOIL SCRAPER HOOK | ATTELAGE RACLEUR | KUPPLUNG ERDSCHABER | ENGANCHE RASCADOR TIERRA |
| 48 | 15422491 | RASCHIATERRA SX RUOTE A V | LEFT 'V' WHEEL SOIL SCRAPER | RACLEUR GCH ROUES EN 'V' | ERDSCHABER LI 'V'-FTRMIGE RZDE | RASCADOR TIERRA IZQ RUEDAS EN |
| 49 | F01410037 | RONDELLA D6 UNI 6592 ZN | WASHER D6 UNI 6592 GALVANIZED | RONDELLE D6 UNI 6592 ZN | UNTERLEGSCHEIBE D6 UNI 6592 ZN | ARANDELA D6 UNI 6592 ZN |
| 50 | F01230022 | DADO AUTOB.NOR.6 ZN | NORM.SELF-LOCKING NUT 6 GALVAN | ECROU AUTOB.NOR.6 ZN | SELBSTSP. MUTTER NOR.6 ZN | TUERCA AUTOB. NOR. 6 ZN |
| 51 | F01020042 | VITE 6 X50 5737 8.G ZN | BOLT 6 X50 5737 8.G GALVANIZ. | VIS 6 X50 5737 8.G ZN | SCHRAUBE 6 X50 5737 8.G ZN | TORNILLO 6x50 5737 8.G ZN |
| 52 | F04010131 | CUSCINETTO 6004 2RS | BEARING 6004 2RS | PALIER 6004 2RS | LAGER 6004 2RS | COJINETE 6004 2RS |
| 53 | F03011082 | GUARNIZIONE A LABBRO 26X20X5 | LIP SEAL 26X20X5 | JOINT A L+VRE 26X20X5 | LIPPENMANSCHETTE 26X20X5 | JUNTA DE REBORDE 26X20X5 |
| 54 | F03011083 | GUARNIZIONE A LABBRO 30X20X7 | LIP SEAL 30X20X7 | JOINT A L+VRE 30X20X7 | LIPPENMANSCHETTE 30X20X7 | JUNTA DE REBORDE 30X20X7 |
| 55 | F06120232 | DISTANZIALE RUOTA 1" | WHEEL SPACER 1" | ENTRETOISE ROUE 1" | ABSTANDST_CK RAD 1" | DISTANCIADOR RUEDA 1" |
| 56 | F06120233 | DISTANZIALE RUOTA 2" | WHEEL SPACER 2" | ENTRETOISE ROUE 2" | ABSTANDST_CK RAD 2" | DISTANCIADOR RUEDA 2" |
| 57 | F06120146 | SEMICERCHIO PLA RUOTA 1" | PLASTIC WHEEL HALF RIM 1" | DEMI-JANTE PLAST. ROUE 1" | HALBFELGE PLA RAD 1" | SEMIARO PL-ST.RUEDA 1" |
| 58 | F06120147 | SEMICERCHIO PLA RUOTA 2" | PLASTIC WHEEL HALF RIM 2" | DEMI-JANTE PLAST. ROUE 2" | HALBFELGE PLA RAD 2" | SEMIARO PL-ST.RUEDA 2" |
| 59 | F01020036 | VITE 6 X25 5737 8.G ZN | BOLT 6 X25 5737 8.G GALVANIZED | VIS 6 X25 5737 8.G ZN | SCHRAUBE 6 X25 5737 8.G ZN | TORNILLO 6 X25 5737 8.G ZN |

TAV. 66/110

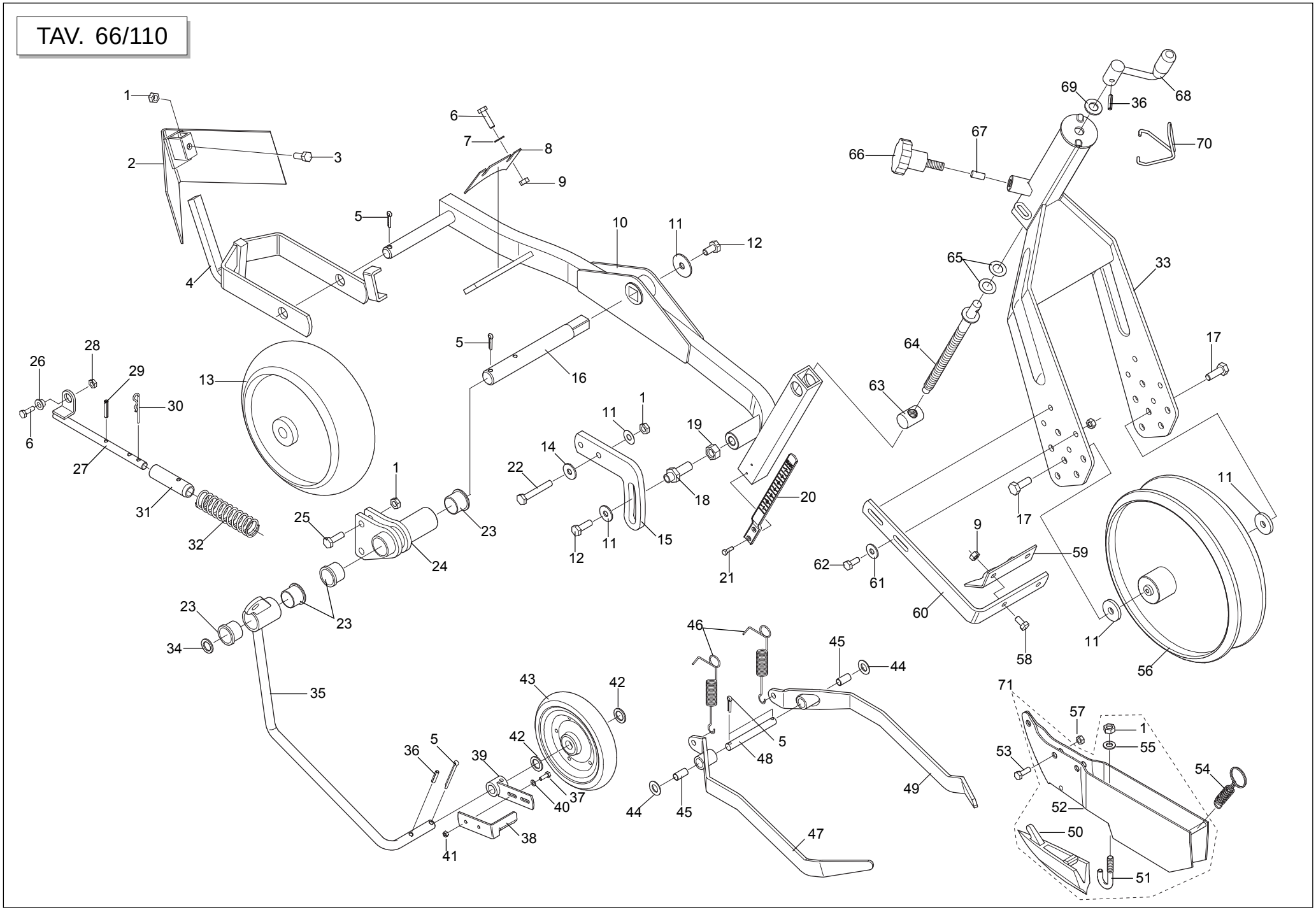




GASPARDO

## *BILANCIERE*

TAV. 66/110

| Pos. | Cod. | Descrizione | Description | Description | Benennung | Descripcion |
|---|---|---|---|---|---|---|
| 1 | F01200270 | DADO 10 5588 6.8 ZN | SCREW 10 UNI 5588 6.8 GALVANIZ | ECROU 10 UNI 5588 6.8 ZN | MUTTER 10 UNI 5588 6.8 ZN | TUERCA 10 UNI 5588 6.8 ZN |
| 2 | 22270241 | SPARTIZOLLE BILANCIERE B4 | SOD-BREAKER ROCKERS B4 | ECARTEUR DE MOTTES BALANCIER B | KIPPHEBEL KLOTENRZUMER B4 | DIVISOR DE TERRONES BALANCN BS |
| 3 | F01020472 | VITE 10X25 5739 8.G ZN | BOLT 10X25 5739 8.G GALVANIZED | VIS 10X25 5739 8.G ZN | SCHRAUBE 10X25 5739 8.G ZN | TORNILLO 10X25 5739 8.G ZN |
| 4 | 15422672 | SUPPORTO RUOTA COMPRESSIONE | COMPRESS. WHEEL SUPPORT | SUPPORT ROUE DE COMPRESSION | HALTERUNG KOMPRESSIONSRAD | SOPORTE RUEDA DE COMPRESION |
| 5 | F02200246 | COPIGLIA 6 X45 1336 ZN | SPLIT PIN 6 X45 1336 GALVAN. | GOUPILLE 6 X45 1336 ZN | SPLINT 6 X45 1336 ZN | PASADOR 6 X45 1336 ZN |
| 6 | F01020440 | VITE 8 X25 5739 8.G ZN | BOLT 8X25 5739 8.G GALVANIZED | VIS 8X25 5739 8.G ZN | SCHRAUBE 8X25 5739 8.G ZN | TORNILLO 8X25 5739 8.G ZN |
| 7 | F01410051 | RONDELLA D8 UNI 6592 ZN | WASHER D8 UNI 6592 GALVANIZED | RONDELLE D8 UNI 6592 ZN | UNTERLEGSCHEIBE D8 UNI 6592 ZN | ARANDELA D8 UNI 6592 ZN |
| 8 | 15420510 | RASCHIATERRA BILANCIERE | SOIL SCRAPER ROCKER | RACLEUR BALANCIER | ERDSCHABER KIPPHEBEL | RASCADOR TIERRA BALANCN R |
| 9 | F01200244 | DADO 8 5588 6.8 ZN | NUT 8 UNI 5588 6.8 GALVANIZED | ECROU 8 UNI 5588 6.8 ZN | MUTTER 8 UNI 5588 6.8 ZN | TUERCA 8 UNI 5588 6.8 ZN |
| 10 | 16620440 | BILANCIERE | ROCKER | BALANCIER | KIPPHEBEL | KIPPHEBEL |
| 11 | 18701140 | RONDELLA 11 X35 X5 | WASHER 11 X 35 X 5 | RONDELLE 11 X35 X5 | UNTERLEGSCHEIBE 11 X35 X5 | ARANDELA 11 X35 X5 |
| 12 | F01020470 | VITE 10X20 5739 8.G ZN | BOLT 10X20 5739 8.G GALVANIZED | VIS 10X20 5739 8.G ZN | SCHRAUBE 10X20 5739 8.G ZN | TORNILLO 10X20 5739 8.G ZN |
| 13 | 15420490 | RUOTINO ANT.BILANC.D.280 | FRONT ROCKER WHEEL D.280 | ROUET ANT. BALANC. D 260 | KLEINES VORD. RAD KIPPHEBEL D. | RUEDECILLA DEL. BALANCN D.280R |
| 14 | F01420060 | ROND.PIANA 11X30X2,5 6593 ZN | FLAT WASHER 11X30X2-5 6593 ZN | ROND.PLATE 11X30X2-5 6593 ZN | SCHEIBE 11X30X2-5 6593 ZN | ARAND. PLANA 11X30X2-5 6593 ZN |
| 15 | 15423251 | PIASTRA DI REGOLAZIONE | ADJUSTING PLATE | PLAQUE DE REGLAGE | EINSTELLPLATTE | PLACA DE REGULACIÓN |
| 16 | 15422572 | ASSE BILANCIERE | ROCKER SPINDLE | AXE BALANCIER | KIPPHEBELACHSE | EJE BALANC |
| 17 | F01020476 | VITE 10X30 5739 8.G ZN | BOLT 10X30 5739 8.G GALVANIZED | VIS 10X30 5739 8.G ZN | SCHRAUBE 10X30 5739 8.G ZN | TORNILLO 10X30 5739 8.G ZN |
| 18 | 15423521 | VITE REGOLAZIONE ZN | ADJUSTING SCREW - GALVANIZED | VIS RÉGLAGE ZN | STELLSCHRAUBE ZN | TORNILLO REGULACIÓN ZN |
| 19 | F01200432 | DADO M14X 1,5 U5589 6S ZG | NUT M14X 1,5 U5589 6S ZG | ECROU M14X 1,5 U5589 6S Z | MUTTER M14X 1,5 U5589 6S | TUERCA M14X 1,5 U5589 6S |
| 20 | 19003400 | ASTA INDICAZIONE PROFONDITA' | DEPTH INDICATING ROD | TIGE INDICATION PROFONDEUR | TIEFENANZEIGESTAB | VARILLA INDICACIÓN PROFUNDIDAD |
| 21 | F02250077 | RIVETTO A STRAPPO 3X14 ALL. | 3X14 ALUMINIUM PULL RIVET | RIVET A RUPTURE 3X14 ALUMINIUM | REISSNIETE3X14 ALL. | REMACHE DESGAR. 3X14 ALL. |
| 22 | F01020122 | VITE 10X70 5737 8.G ZN | BOLT10X70 5737 8.G GALVANIZED | VIS 10X70 5737 8.G ZN | SCHRAUBE 10X70 5737 8.G ZN | TORNILLO 10X70 5737 8.G ZN |
| 23 | 66349003 | BOCCOLA SINT. | BUSHING- SINTERED | BOITE FRITTEE | SYNTH. BUECHSE | CASQUILLO SINT. |
| 24 | 15423680 | SUPPORTO BILANCIERE SP540 | ROCKERS SUPPORT SP540 | SUPPORT BALANCIER SP540 | EINHEIT KIPPHEBEL SP540 | SOP. BALANC N SP540 |
| 25 | F01020110 | VITE 10X40 5737 8.G ZN | BOLT 10X40 5737 8.G GALVANIZED | VIS 10X40 5737 8.G ZN | SCHRAUBE 10X40 5737 8.G ZN | TORNILLO 10X40 5737 8.G ZN |
| 26 | 22250398 | BOCCOLA BRACCIO SUPERIORE SV/2 | UPPER ARM BUSHING SV/2 | BOITE BRAS SUP. SV/2 | BsCHSE OBERARM SV/2 | CASQUILLO BRAZO SUPERIOR SV/2 |
| 27 | 15423810 | SUPPORTO MOLLA | SPRING SUPPORT | SUPPORT RESSORT | FEDERHALTERUNG | SOPORTE MUELLE |
| 28 | F01220222 | DADO TRISTOP M 8 | NUT- TRISTOP M 8 | ECROU TRISTOP M 8 | MUTTER TRISTOP M 8 | TUERCA TRISTOP M 8 |
| 29 | F02100087 | SPINA EL.5 X30 DIN 1481 | PIN EL. 5 X30 DIN 1481 | FICHE EL. 5 X30 DIN 1481 | SPANNSTIFT 5 X30 DIN 1481 | CLAVIJA EL.5 X30 DIN 1481 |
| 30 | F02200363 | COPIGLIA R 3X62 | SPLIT PIN R 3X62 | GOUPILLE R 3X62 | SPLINT R 3X62 | CHAVETA R 3X62 |
| 31 | 15423820 | BOCCOLA NYLON SUPPORTO MOLLA | SPRING-SUPPORTING NYLON BUSH | DOUILLE NYLON SUPPORT RESSORT | NYLONBÜCHSE FEDERHALTERUNG | BUJE NYLON SOPORTE MUELLE |
| 32 | 18903670 | MOLLA COMPRESSIONE RUOTINO | COMPR. WHEEL SPRING | RESSORT COMPRESSION ROUET | FEDER DsNGUNG ROLLE | MUELLE COMPRESIN RUEDECILLA A |
| 33 | 15421633 | SUPPORTO RUOTE | WHEEL SUPPORT | SUPPORT ROUES | RZDERHALTERUNG | SOPORTE RUEDAS |
| 34 | 18701590 | RONDELLA 25X35X2,5 ZN | WASHER 25 x 35 x2,5 ZN | RONDELLE 25 x 35 x2,5 ZN | UNTERLEGSCHEIBE 25 x 35 x2,5 Z | ARANDELA 25 x 35 x2,5 ZN |
| 35 | 15423780 | SUPPORTO RUOTINO | WHEEL SUPPORT | SUPPORT ROUET | HALTERUNG ROLLE | SOPORTE RUEDECILLA |
| 36 | F02100109 | SPINA EL.6 X24 DIN 1481 | PIN EL. .6 X24 DIN 1481 | FICHE EL. 6 X24 DIN 1481 | SPANNSTIFT 6 X24 DIN 1481 | CLAVIJA EL.6 X24 DIN 1481 |
| 37 | F01020378 | VITE 5 X16 5739 8.G ZN | BOLT 5X16 5739 8.G GALVANIZED | VIS 5X16 5739 8.G ZN | SCHRAUBE 5X16 5739 8.G ZN | TORNILLO 5X16 5739 8.G ZN |
| 38 | 15423271 | RASCHIATERRA | SOIL SCRAPER | RACLEUR | ERDSCHABER | RASCADOR TIERRA |
| 39 | 15421671 | SUPPORTO RASCHIATERRA | SOIL SCRAPER SUPPORT | SUPPORT RACLEUR | HALTERUNG ERDSCHABER | SOPORTE RASCADOR TIERRA |
| 40 | F01420022 | ROSETTA M5 5,5X10X1 U6593 ZG | WASHER M5 5,5X10X1 U6593 ZG | RONDELLE M5 5,5X10X1 U6593 ZG | SCHEIBE M5 5,5X10X1 U6593 ZG | ARANDELA M5 5,5X10X1 U6593 ZG |
| 41 | F01200220 | DADO 5 5588 6.8 ZN | NUT 5 UNI 5588 6.8 GALVANIZED | ECROU 5 UNI 5588 6.8 ZN | MUTTER 5 UNI 5588 6.8 ZN | TUERCA 5 UNI 5588 6.8 ZN |
| 42 | 20970025 | RONDELLA 25,2X2X16,5 | WASHER 25-2X2X16-5 | RONDELLE 25-2X2X16-5 | UNTERLEGSCHEIBE 25-2X2X16-5 | ARANDELA 25-2X2X16-5 |
| 43 | F06120066 | RUOTINO FLEX 170 X 30 | FLEX WHEEL 170 X 30 | ROUET FLEX 170 X 30 | ROLLE FLEX 170 X 30 | RUEDECILLA FLEX 170 X 30 |
| 44 | 18701820 | RONDELLA 16,5X25X1,0 ZN | WASHER 16.5 X 25 X 1- GALVAN. | RONDELLE 16,5 X25 X1 ZN | UNTERLEGSCHEIBE 16,5 X25 X1 ZN | ARANDELA 16,5 X25 X1 ZN |
| 45 | F04150024 | BOCCOLA PAP 15X17X25 | PAP BUSH 15X17X25 | BOITE PAP 15X17X25 | BsCHSE PAP 15X17X25 | CASQUILLO PAP 15X17X25 |
| 46 | 18903170 | MOLLA TRAZ.ZN RASCHIAT. SP530 | TRACTION SPRING ZN SCRAPER SP5 | RESSORT TRACT. ZN RACLEUR SP53 | ZUGFEDER ZN ABSCHABER SP530 | MUELLE TRAC. ZN RASCADOR SP530 |
| 47 | 15422711 | COPRISEME SX BIETOLE | LEFT BEET SEED COVER | COUVRE-GRAINE GCH BETTES | SAMENABDECKER LI RsBEN | CUBRESEMILLAS IZQ REMOLACHAS |
| 48 | 15421080 | ASSE COPRISEME ZN | SEED COVER SPINDLE ZN | AXE COUVRE-GRAINES | SAMENDECKACHSE ZN | EJE CUBRESEMILLA ZN |
| 49 | 15422701 | COPRISEME DX BIETOLE | RIGHT BEET SEED COVER | COUVRE-GRAINE DRT BETTES | SAMENABDECKER RE RsBEN | CUBRESEMILLAS DER REMOLACHAS |
| 50 | 22270226 | TAGLIENTE FALCIONE B4 SP/S | KNIFE COULTER SUGAR BEET SP | POINTE DE SOC BETT SP520/540 | SCHARSPITZE RUBE SP | PONTA SURCADOR REMOLACHA SP |
| 51 | 22270428 | GANCIO TAGLIENTE SP/S | HOOK - CUTTER SP/S | CROCHET HACHOIR SP/S | HAKEN SZSCHAR SP/S | GANCHO GUADA¾ADORA SP/S |
| 52 | 15422473 | FALCIONE BIETOLE SP540 | SUGAR BEET CUTTER SP540 | HACHOIR BETTES SP540 | FUTTERSCHNEIDE RUBEN SP540 | GUADANADORA REMOLACHAS SP540 |
| 53 | F01020479 | VITE 10X35 5739 8.G ZN | BOLT 10X35 5739 8.G GALVANIZED | VIS 10X35 5739 8.G ZN | SCHRAUBE 10X35 5739 8.G ZN | TORNILLO 10X35 5739 8.G ZN |
| 54 | 18902481 | MOLLA TRAZIONE AGG.FALCIONE | COULTER HOOK-UP TRACT. SPRING | RESSORT TRACTION FIX. SOC | ZUGFEDER KUPPL. SÄSCHAR | MUELLE TRACCIÓN CONEX. BOTA |
| 55 | F01430023 | RONDELLA D10 DIN 6798 D.INT.ZN | WASHER D10 DIN 6798 D.INT.ZN | RONDELLE D10 DIN 6798 D. INT. | UNT. SCHEIBE D10 DIN 6798 D.IN | ARANDELA D10 DIN 6798 D.INT.ZN |

TAV. 66/110

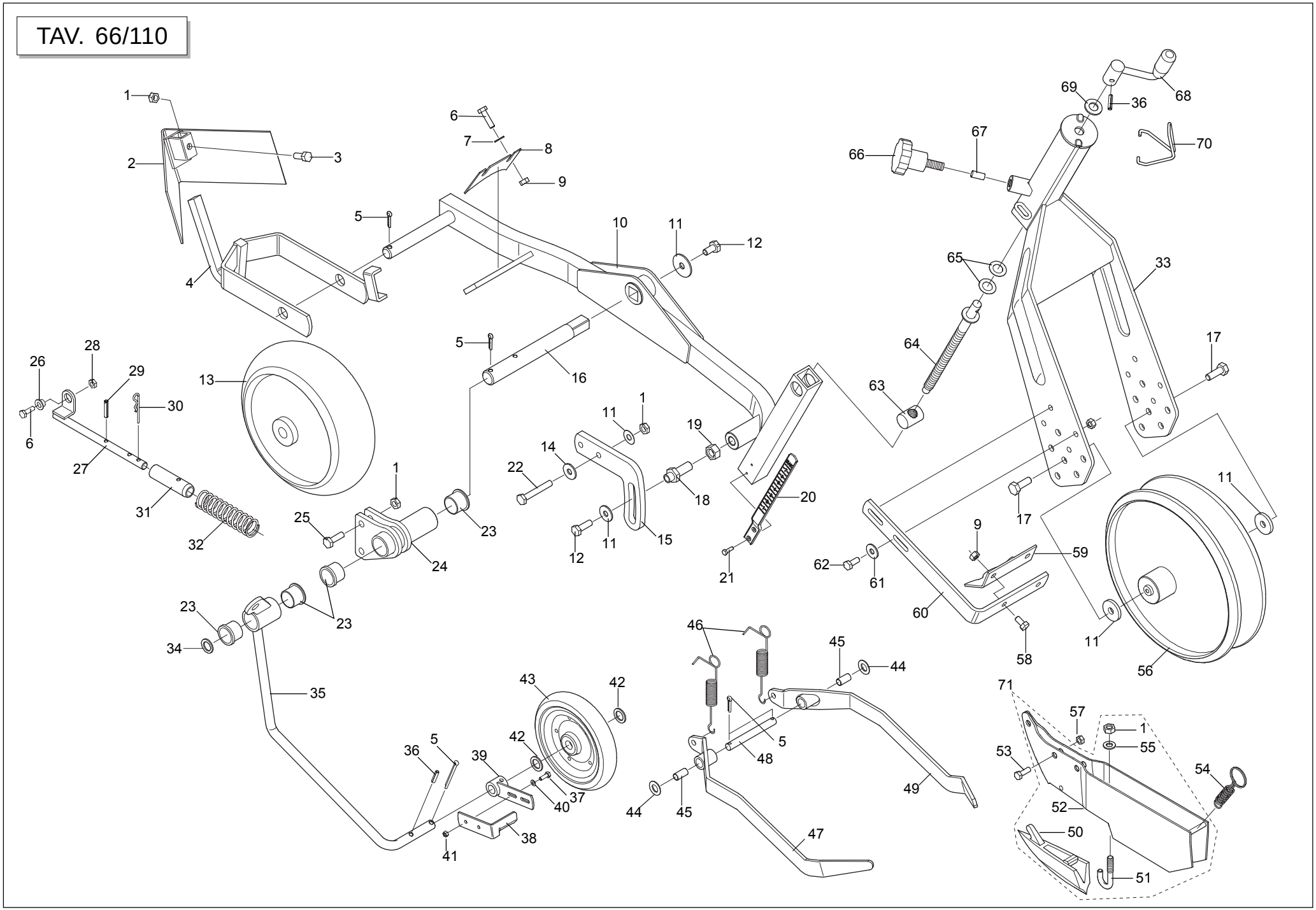




GASPARDO

## *BILANCIERE*

TAV. 66/110

| Pos. | Cod. | Descrizione | Description | Description | Benennung | Descripcion |
|---|---|---|---|---|---|---|
| 56 | 15421240 | RUOTA 290X80 FLEX | FLEX -BRASILE' WHEEL 290X80 | ROUE 290X80 FLEX 'BRASILE' | RAD 290X80 FLEX 'BRASILE' | RUEDA 290X80 FLEX 'BRASILE' |
| 57 | F01220233 | DADO TRISTOP M10 | NUT TRISTOP M10 | ECROU TRISTOP M10 | MUTTER TRISTOP M10 | TUERCA TRISTOP M10 |
| 58 | F01020432 | VITE 8 X16 5739 8.G ZN | BOLT 8X16 5739 8.G GALVANIZED | VIS 8X16 5739 8.G ZN | SCHRAUBE 8X16 5739 8.G ZN | TORNILLO 8X16 5739 8.G ZN |
| 59 | 15421030 | RASCHIATERRA RUOTA POSTERIORE | SOIL SCRAPER REAR WHEEL | RACLEUR ROUE POSTERIEURE | ERDSCHABER HINTERES RAD | RASCADOR TIERRA TRASERO |
| 60 | 15421022 | SUPP.RASCHIATERRA RUOTA | SCRAPER SUPPORT WHEEL | SUPP. RACLEUR ROUES | HALTERUNG ERDSCHABER RADER | SOP.RASCADOR TIERRA RUEDAS |
| 61 | F01420048 | ROND.PIANA 9X 24X2 6593 ZN | FLAT WASHER 9X 24X2 6593 GALV. | ROND. PLATE 9X 24X2 6593 ZN | SCHEIBE 9X 24X2 6593 ZN | ARAND. PLANA 9X 24X2 6593 ZN |
| 62 | F01020440 | VITE 8 X25 5739 8.G ZN | BOLT 8X25 5739 8.G GALVANIZED | VIS 8X25 5739 8.G ZN | SCHRAUBE 8X25 5739 8.G ZN | TORNILLO 8X25 5739 8.G ZN |
| 63 | 22230063 | ELEMENTO ARTICOLATO | ARTICULATED ELEMENT | ELEMENT ARTICULE | GELENKELEMENT | ELEMENTO ARTICULADO |
| 64 | 22230062 | VITE DI REGOLAZIONE | ADJUSTMENT BOLT | VIS DE REGLAGE | EINSTELLSCHRAUBE | TORNILLO DE REGULACIN S |
| 65 | 22220073 | RONDELLA 28X0,3X16,5 | WASHER 28X0-3X16-5 | RONDELLE 28X0-3X16-5 | UNTERLEGSCHEIBE 28X0-3X16-5 | ARANDELA 28X0-3X16-5 |
| 66 | F06220013 | VOLANT.8L.PERN.M12X30-40 VPA55 | 8-LOBE PIN HANDWHEEL M12X30-40 | VOLANT 8 LOBES PIVOT M12X30-40 | HANDRAD.8L.ZAPFENM12X30-40 VPA | VOLDEL.8L.PERN.M12X30-40 VPA55 |
| 67 | 14820991 | FERMO REGOLAZIONE | ADJUSTMENT STOP | BUTEE REGLAGE | EINSTELLUNGSSPERRE | BLOQUEO REGULACIËN |
| 68 | 22270235 | MANIGLIA REGOLAZIONE B4 | ADJUSTMENT HANDLE B4 | POIGNEE REGLAGE B4 | EINSTELLGRIFF B4 | MANIJA REGULACIN B4 M |
| 69 | F01410088 | RONDELLA D14 UNI 6592 ZN | WASHER D14 UNI 6592 GALVANIZED | RONDELLE D14 UNI 6592 ZN | UNTERLEGSCHEIBE D14 UNI 6592 Z | ARANDELA D14 UNI 6592 ZN |
| 70 | 65336100 | MOLLA SPEC.FERMO MANIGLIA SP | SPEC SPRING HANDLE STOP SP | RESSORT SPEC. ARRET POIGNEE SP | SPEZIALFEDER GRIFFSPERRE SP | MUELLE ESPEC. BLOQUEO MANIJA S |
| 71 | 15422473 | FALCIONE BIETOLE SP540 | SUGAR BEET CUTTER SP540 | HACHOIR BETTES SP540 | FUTTERSCHNEIDE RUBEN SP540 | GUADANADORA REMOLACHAS SP540 |

TAV. 66/261

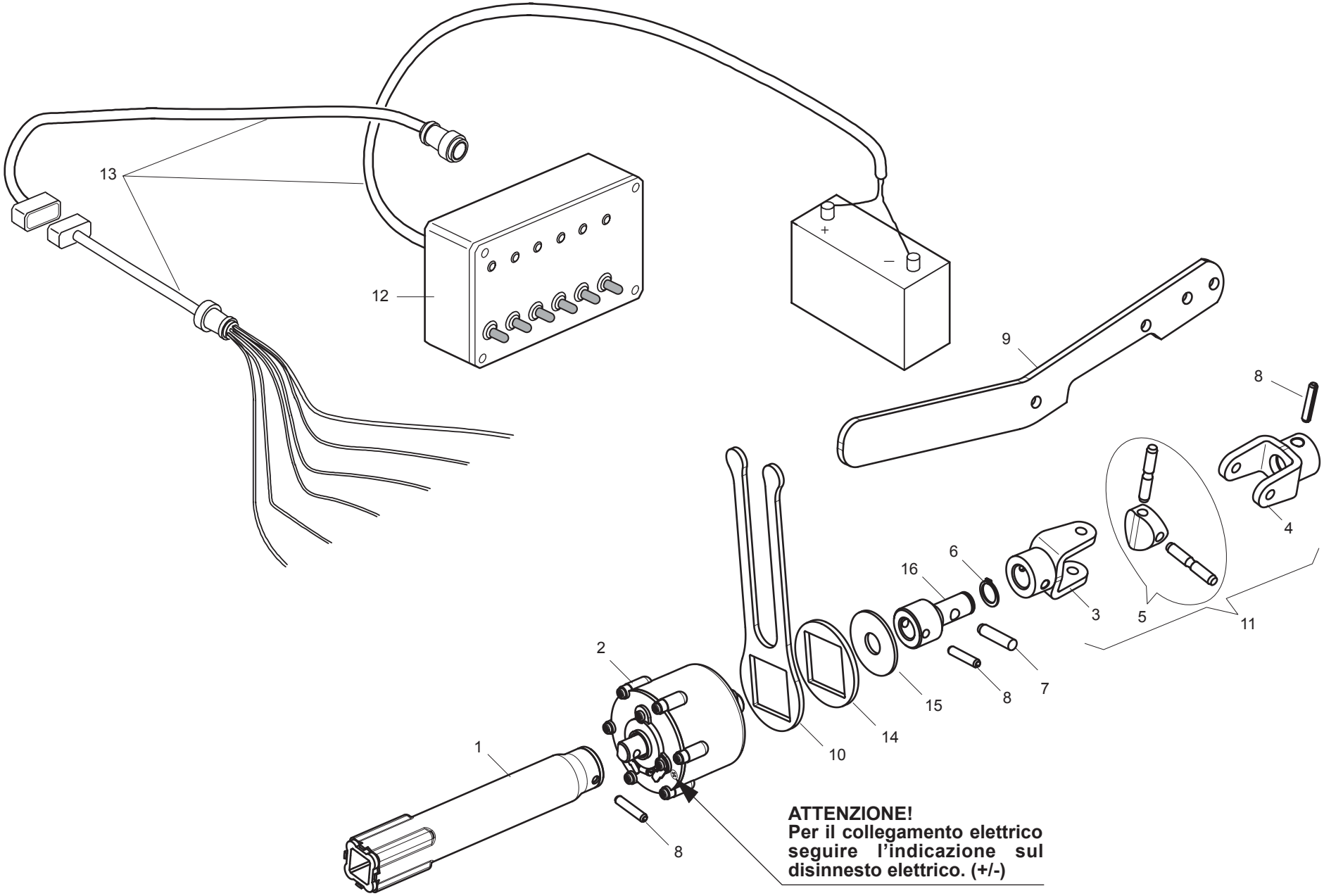




GASPARDO

## *ESCLUSIONE ELETTRICA FILE DI SEMINA*

TAV. 66/261

| Pos. | Cod. | Descrizione | Description | Description | Benennung | Descripcion |
|---|---|---|---|---|---|---|
| 1 | 15424011 | INNESTO ESCL.ELETTRICA SP | ELECTRIC DISABLE CONNECTION SP | ACCOUPL. EXCL.+LECTRIQUE SP | STECKVORRICHT.ELEKT.AUSSCHALTU | CONECTOR DESC.EL+CTRICA SP |
| 2 | 16033700 | DISINNESTO ELETTRICO 180 COMPL | COMPL. ELECTRIC RELEASE 180 | D+BRAYAGE +LECTRIQUE 180 COMPL | ELEKTRISCHE ENTKUPPLUNG 180 KO | DESCONEXIËN EL+CTRICA 180 COMP |
| 3 | 14821521 | FORCELLA | FORK | FOURCHETTE | GABEL | HORQUILLA |
| 4 | 15424060 | FORCELLA ESCLUSIONE ELETTR. | FORK ELECTRIC DISABLE | FOURCHETTE EXCL. +LECTRIQUE | STAFEL ELEKT.AUSSCHALTU | HORQUILLA DESC.EL+CTRICA |
| 5 | 22270454 | CROCIERA COMPL. SP/S | SPIDER SP/S | CROSILLON COMPL CARDAN TRANSM | GELENKKREUZ KOMPL. SP/S | CRUCETA COMPL. SP/S |
| 6 | F02050606 | ANELLO ARR.16 UNI 7435-75 | STOP RING 16 UNI 7435-75 | BAGUE ARRET 16 UNI 7435-75 | RING 16 UNI 7435-75 | ANILLO PARADA 16 UNI 7435-75 |
| 7 | 66248057 | SPINA DI SICUREZZA SP | SAFETY PIN SP | BROCHE PLASTIC SECURITE CARDAN | SICHERHEITSSTIFT SP | CLAVIJA DE SEGURIDAD SP |
| 8 | F02100114 | SPINA EL.6 X30 DIN 1481 | PIN EL. 6 X30 DIN 1481 | FICHE EL. 6 X30 DIN 1481 | SPANNSTIFT 6 X30 DIN 1481 | CLAVIJA EL.6 X30 DIN 1481 |
| 9 | 15424030 | PIASTRA FERMO ESCLUSIONE ELETT | ELECTRIC DISABLE STOP PLATE | PLAQUE BUT+E EXCLUSION +LECTRI | SPERRPLATTE ELEK.AUSSCHALTUNG | PLACA TOPE DESCONEXIËN EL+CT. |
| 10 | 16033750 | FERMO DISINNESTO ELETTRICO ZN | UNCOUPLING ELECTRIC STOP | ARRET DEBRAYAGE +LECT. | FESTSTELL. AUSKUPPLUNG EL. | BLOQUEO DESCONEXIN EL. |
| 11 | 15423980 | FORCELLE SNODO ESCL.ELET.COMPL | FORK ELECTRIC DISABLE COMPLET | FOURCHETTE EXCL. +LECTR. COMPL | STAFEL ELEKT.AUSSCHALTU KOMPL. | HORQUILLA DESC.EL+CTRICA COMPL |
| 12 | F05010051 | CENTRALINA 6F CON SPINA | CONTROL BLOCK | BOITIER | ANLAGE | CENTRALINA |
| 13 | F05010203 | CABLAGGIO 6 F.L.3000 | WIRING 6 F.L.3000 | C-BLAGE 6 F.L.3000 | VERKABELUNG 6 F.L.3000 | CABLEADO 6 F.L.3000 |
| 13 | F05010204 | CABLAGGIO 6 F.L.5000 | WIRING 6 F.L.5000 | C-BLAGE 6 F.L.5000 | VERKABELUNG 6 F.L.5000 | CABLEADO 6 F.L.5000 |
| 14 | 16033740 | DISTANZIALE DISINNESTO ELET.ZN | UNCOUPLING ELECTRIC SPACER | ENTRETOISE DEBRAYAGE +LECT. | DISTANZST_CK AUSKUPPLUNG EL. | DISTANCIADOR DESCONEXIN EL. |
| 15 | 18701970 | RONDELLA 16X48X2,5 | WASHER 16X48X2,5 | RONDELLE 16X48X2,5 | UNTERLEGSCHEIBE 16X48X2,5 | ARANDELA 16X48X2,5 |
| 16 | 16033730 | ADATTATORE CROCIERA | SPIDER ADAPTOR | ADAPTATEUR CROISIERE | PASSST_CK GELENKKREUZ | ADAPTADOR CRUCETA |

# TAV. 66/123

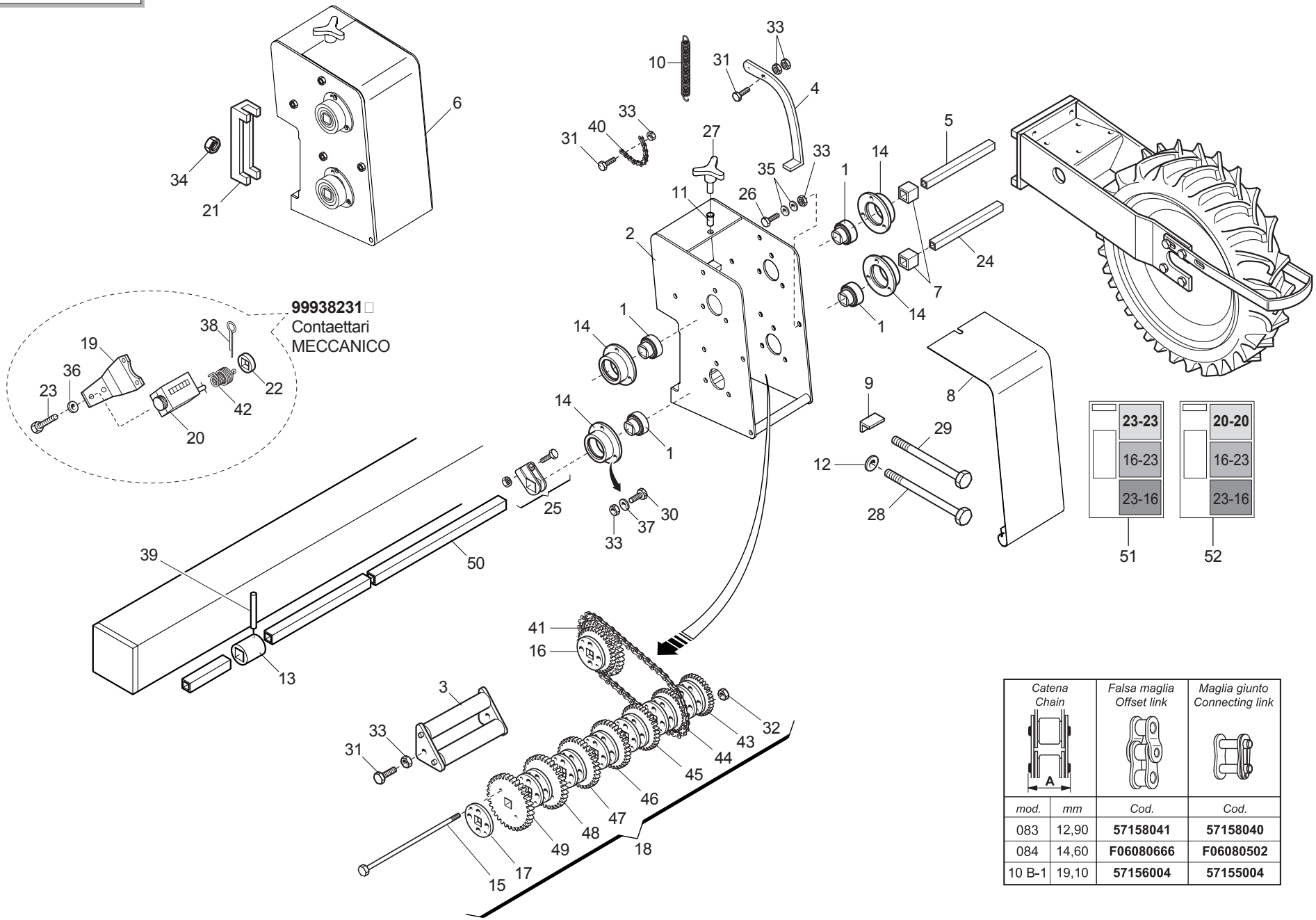


| Catena Chain | | Falsa maglia Offset link | Maglia giunto Connecting link |
|---|---|---|---|
| mod. | mm | Cod. | Cod. |
| 083 | 12,90 | **57158041** | **57158040** |
| 084 | 14,60 | **F06080666** | **F06080502** |
| 10 B-1 | 19,10 | **57156004** | **57155004** |

## *CAMBIO*

TAV. 66/123

| Pos. | Cod. | Descrizione | Description | Description | Benennung | Descripcion |
|---|---|---|---|---|---|---|
| 1 | 14830390 | CUSCINETTO FORO QUADRO | SQUARE-HOLED BEARING | ROULEMENT AL+SAGE CARR+ | VIERKANTLAGER | COJINETE ORIFICIO CUADRADO |
| 2 | 16630020 | SCATOLA CAMBIO Q.150 | GEARBOX 150 | BOITE DE VITESSE 150 | GETRIEBEKASTEN 150 | CAJA DE CAMBIO DE VELOCIDAD 15 |
| 3 | 15430321 | RULLO TENDICATENA | CHAIN STRETCHER ROLLER | ROULEAU TENDEUR DE CHAINE | KETTENSPANNROLLE | RODILLO TENSOR DE CADENA |
| 4 | 15430331 | LEVA CAMBIO | GEAR LEVER | LEVIER BOITE DE VITESSE | GETRIEBEHEBEL | PALANCA DE CAMBIO |
| 5 | 15430340 | ASSE INGRANAGGI L.155 | GEAR SPINDLE L.155 | AXE ENGRENAGES L155 | ACHSE ZAHNRZDER L.122 | EJE ENGRANAJES L.155 |
| 6 | 16630010 | SCATOLA CAMBIO Q.150 COMPL. | GEARBOX 150 | BOITE DE VITESSE 150 | GETRIEBEKASTEN 150 | CAJA DE CAMBIO DE VELOCIDAD 15 |
| 7 | 15430501 | DISTANZIALE INTERNO CAMBIO | GEARBOX INNER SPACER | ENTRETOISE INT. BOITE VITESSE | INNERES DISTANZSTsCK GETRIEBE | DISTANCIADOR INTERIOR CAMBIO |
| 8 | 15430711 | COPERCHIO CAMBIO | GEAR COVER | COUVERCLE BOITE DE VITESSE | GETRIEBEDECKEL | TAPA CAMBIO |
| 9 | 15431020 | FERMO VITE CAMBIO | GEAR SCREW STOP | ARRET VIS BOITE DE VITESSE | FESTSTELLVORRICH. GETRIEBESCHR | BLOQUEO TORNILLO |
| 10 | 18902970 | MOLLA TRAZ.CAMBIO ZN SP | GALVAN. GEAR TRACT. SPRING SP | RESS. TRACT. BOITE VITESSE ZN | ZUGFEDER GETRIEBE ZN SP | MUELLE TRAC. CAMBIO ZN SP |
| 11 | F02250683 | DADO CILINDRICO 8 TC 40 | CYLINDRICAL NUT 8 TC 40 | ECROU CYLINDRIQUE 8 TC 40 | ZYLINDRISCHE MUTTER 8 TC 40 | TUERCA CILINDRICA 8 TC 40 |
| 12 | 20970142 | RONDELLA 32X4X15,5 | WASHER 32X4X15-5 | RONDELLE 32X4X15-5 | UNTERLEGSCHEIBE 32X4X15-5 | ARANDELA 32X4X15-5 |
| 13 | 22220085 | SNODO | ARTICULATION | ARTICULATION | GELENK | ARTICULACIN A |
| 14 | 22230094 | SUPPORTO CUSCINETTO | BEARING SUPPORT | SUPPORT PALIER | LAGERBsCHSE | SOPORTE COJINETE |
| 15 | 19203260 | VITE M5X115 ZN | BOLT M5X115 ZN | VIS M5X115 ZN | SCHRAUBE M5X115 ZN | TORNILLO M5X115 ZN |
| 16 | 22270152 | ING.Z 16-23 RUOTA-CAMBIO SP | WHEEL- GEARBOX GEARS SP | ENGR. Z 16-23 ROUE BOITE VIT. | ZAHNRAD Z 16-23 GETRIEBERAD SP | ENGRAN. Z 16-23 RUEDA-CAMBIO |
| 17 | 22270162 | RINFORZO INGR.ASSE DA 20 SP | AXLE GEAR REINFORCEMENT 20 SP | RENFORC. ENGREN. AXE DE 20 SP | VERSTZRKUNG ACHSZAHNRAD 20 SP | REFUERZO ENGRAN. EJE DE 20 SP |
| 18 | 22270163 | BLOCCO CAMBIO ASSE DA 20 SP | 20 CM SPINDLE GEARBOX SP | ENSEMBLE BOITE DE VITESSE | GETRIEBEBLOCK ACHSE 20 SP | BLOQUE CAMBIO EJE DE 20 SP |
| 19 | 22270217 | SUPP.CONTAETT. CAMB.35 SP LM | HECTARE COUNTER GEAR SUPPORT 3 | SUPPORT COMPT. D'HECT. B. VIT. | HALT. GETRIEBE HEKTARZZHLER 35 | SOPORTE CONTADOR HECT. CAMB.35 |
| 20 | 22270218 | CONTAETTARI TEN. STAG. SP LM | HECTARE COUNTER SEAL SP LM | COMPT. D'HECT. ETANCHE SP LM | HEKTARZZHLER DICHT SP LM | CUENTA HECTAREAS ESTANCO |
| 21 | 15110091 | SCONTRO A U | STRIKER | BRIDE 150 MM | ANSCHLAG | ELEMENTO DE EMPALME |
| 22 | 66248218 | RONDELLA DISTAN.SPAND. | MAN. SPR. SPACER WASHER | RONDELLE ENTRETOISE EP. ENGRAI | ABSTANDSCHEIBE DsNGERSTREUER | ARANDELA DISTAN.ABONAD. |
| 23 | F01040025 | VITE 4 X10 5931 8.G ZN | BOLT 4 X10 5931 8.G GALVANIZ. | VIS 4 X10 5931 8.G ZN | SCHRAUBE 4 X10 5931 8.G ZN | TORNILLO 4 X10 5931 8.G ZN |
| 24 | 22500171 | MANICOTTO L.175 | SLEEVE L.175 | MANCHON L.175 | MUFFE L.175 | MANGUITO L.175 |
| 25 | 22505085 | FERMO ASSE IN LAMIERA | PLATE AXLE STOP | ARRET AXE EN TOLE | FESTSTELLVORRICHTUNG BLECHACHS | BLOQUEO EJE DE CHAPA |
| 26 | F01060040 | VITE 8 X20 5732 4.6 ZN | BOLT 8 X20 5732 4.6 GALVANIZED | VIS 8 X20 5732 4.6 ZN | SCHRAUBE 8 X20 5732 4.6 ZN | TORNILLO 8 X20 5732 4.6 ZN |
| 27 | F06220018 | VOLANTINO 3LOBI D.65-M8X15 | 3-LOBE HANDWHEEL D.65-M8X15 | VOLANT 3 LOBES D.65-M8X15 | HANDRAD 3 BUCKEL D.65-M8X15 | VOLANTE 3 LOBI D.65-M8X15 |
| 28 | 41601101 | VITE 14 X160 5737 8.G | BOLT M 14 X160 5737 8.G | VIS M 14 X160 5737 8.G | SCHRAUBE M 14 X160 5737 8.G | TORNILLO M 14 X160 5737 8.G |
| 29 | F01020232 | VITE 14X200 5737 8.G ZN | BOLT 14X200 5737 8.G GALVANIZ. | VIS 14X200 5737 8.G ZN | SCHRAUBE 14X200 5737 8.G ZN | TORNILLO 14X200 5737 8.G ZN |
| 30 | F01020432 | VITE 8 X16 5739 8.G ZN | BOLT 8X16 5739 8.G GALVANIZED | VIS 8X16 5739 8.G ZN | SCHRAUBE 8X16 5739 8.G ZN | TORNILLO 8X16 5739 8.G ZN |
| 31 | F01020449 | VITE 8 X35 5739 8.G ZN | BOLT 8X35 5739 8.G GALVANIZED | VIS 8X35 5739 8.G ZN | SCHRAUBE 8X35 5739 8.G ZN | TORNILLO 8X35 5739 8.G ZN |
| 32 | F01200220 | DADO 5 5588 6.8 ZN | NUT 5 UNI 5588 6.8 GALVANIZED | ECROU 5 UNI 5588 6.8 ZN | MUTTER 5 UNI 5588 6.8 ZN | TUERCA 5 UNI 5588 6.8 ZN |
| 33 | F01200244 | DADO 8 5588 6.8 ZN | NUT 8 UNI 5588 6.8 GALVANIZED | ECROU 8 UNI 5588 6.8 ZN | MUTTER 8 UNI 5588 6.8 ZN | TUERCA 8 UNI 5588 6.8 ZN |
| 34 | F01200306 | DADO 14 5588 6.8 ZN | NUT 14 UNI 5588 6.8 GALVANIZED | ECROU 14 UNI 5588 6.8 ZN | MUTTER 14 UNI 5588 6.8 ZN | TUERCA 14 UNI 5588 6.8 ZN |
| 35 | F01410051 | RONDELLA D8 UNI 6592 ZN | WASHER D8 UNI 6592 GALVANIZED | RONDELLE D8 UNI 6592 ZN | UNTERLEGSCHEIBE D8 UNI 6592 ZN | ARANDELA D8 UNI 6592 ZN |
| 36 | F01410011 | RONDELLA D4 UNI 6592 ZN | WASHER D4 UNI 6592 ZN | RONDELLE D4 UNI 6592 ZN | UNTERLEGSCHEIBE D4 UNI 6592 ZN | ARANDELA D4 UNI 6592 ZN |
| 37 | F01430059 | RONDELLA D8 DIN 6798 D.INT.ZN | WASHER D8 DIN 6798 D.INT.ZN | RONDELLE D8 DIN 6798 D. INT. Z | UNT. SCHEIBE D8 DIN 6798 D. IN | ARANDELA D8 DIN 6798 D.INT.ZN |
| 38 | F02200228 | COPIGLIA 5 X35 1336 ZN | SPLIT PIN 5 X35 1336 GALVAN. | GOUPILLE 5 X35 1336 ZN | SPLINT 5 X35 1336 ZN | PASADOR 5 X35 1336 ZN |
| 39 | F02100087 | SPINA EL.5 X30 DIN 1481 | PIN EL. 5 X30 DIN 1481 | FICHE EL. 5 X30 DIN 1481 | SPANNSTIFT 5 X30 DIN 1481 | CLAVIJA EL.5 X30 DIN 1481 |
| 40 | F06080008 | SP.CAT.1/2-3/16 16 MAGLIE | CHAIN SECTION 1/2-3/16 16 MES | TRONÃON CHA+NE 1/2-3/16 16 MAI | KET.ABSCHN.1/2-3/16 16 GLIEDER | TRAMO CAD.1/2-3/16 16 ESLABONE |
| 41 | F06080230 | SPEZ.CAT.ISO 10B-1 46 MAGLIE | CUT-DOWN CHAIN .ISO 10B-1 46-L | TRONCON CHAINE ISO 10B-1 46 MA | KETTENLZNGE ISO 10B-1 46 GLIE | TRECHO CADENA ISO 10B-1 46 ESL |
| 42 | 65336098 | MOLLA CONTAETTARI CAMB.35 SP | HECT. COUNT. GEAR SPRING 35 SP | RESS. COMPTEUR D'HECTARES CH | FEDER HEKTARZZHLER GETRIEBE.35 | MUELLE CONTADOR DE HECTAREAS C |
| 43 | 66248162 | INGRANAGGIO Z-17 SP | GEAR Z-17 SP | ENGRENAGE Z-17 SP | ZAHNRAD Z-17 SP | ENGRANAJE Z-17 SP |
| 44 | 66248163 | INGRANAGGIO Z-18 SP | GEAR Z-18 SP | ENGRENAGE Z-18 SP | ZAHNRAD Z-18 SP | ENGRANAJE Z-18 SP |
| 45 | 66248164 | INGRANAGGIO Z-19 SP | GEAR Z-19 SP | ENGRENAGE Z-19 SP | ZAHNRAD Z-19 SP | ENGRANAJE Z-19 SP |
| 46 | 66248165 | INGRANAGGIO Z-20 SP | GEAR Z-20 SP | ENGRENAGE Z-20 SP | ZAHNRAD Z-20 SP | ENGRANAJE Z-20 SP |
| 47 | 66248166 | INGRANAGGIO Z-21 SP | GEAR Z-21 SP | ENGRENAGE Z-21 SP | ZAHNRAD Z-21 SP | ENGRANAJE Z-21 SP |
| 48 | 66248167 | INGRANAGGIO Z-22 SP | GEAR Z-22 SP | ENGRENAGE Z-22 SP | ZAHNRAD Z-22 SP | ENGRANAJE Z-22 SP |
| 49 | 66248168 | INGRANAGGIO Z-23 SP | GEAR Z-23 SP | ENGRENAGE Z-23 SP | ZAHNRAD Z-23 SP | ENGRANAJE Z-23 SP |
| 50 | 11430240 | ASSE TRASMISSIONE L.430 | TRANSMISSION AXLE L.430 | AXE TRANSMISSION L430 | sBERTRAGUNGSACHSE L.430 | EJE TRANSMISIN L 430 A |
| 50 | 13831520 | ASSE TRASMISSIONE L.3000 | TRANSMISSION AXLE L.3000 | AXE TRANSMISSION L3000 | sBERTRAGUNGSACHSE L.3000 | EJE TRANSMISIN L 3000 A |
| 50 | 20860090 | ASSE SX 5F.60 L.1460 | AXLE- LEFT 5-R.60 L.1460 | AXE GCH. 5 RANGEES 60 L. 1460 | ACHSE LI 5R.F.60 L.1460 | EJE IZQ. 5 FILA. 60 L.1460 |
| 50 | 22220250 | ASSE SX 6 FILE L.3500 | AXLE LEFT 6-ROW L.3500 | AXE GCH. 6 RANGEES L. 3500 | ACHSE LINKS 6 REIHEN L.3500 | EJE IZQ. 6 FILAS L.3500 |
| 50 | 22230141 | ASSE SEMINAT.6F.CM.80 L.2000 | AXLE- 6-ROW SEEDER MACH. 80 CM | AXE SEMEUR 6 RANGEES CM. 80 L. | ACHSE SZAELEMENT 6 R.CM.80 L.2 | EJE SEMBR. 6 FILAS. CM.80 L.20 |
| 50 | 22230142 | ASSE 4 FILE L.800 | 4-ROW SPINDLE L.800 | AXE 4 RANGEES L. 800 | ACHSE 4 REIHEN B. 800 | EJE 4 FILAS L.800 |

# TAV. 66/123

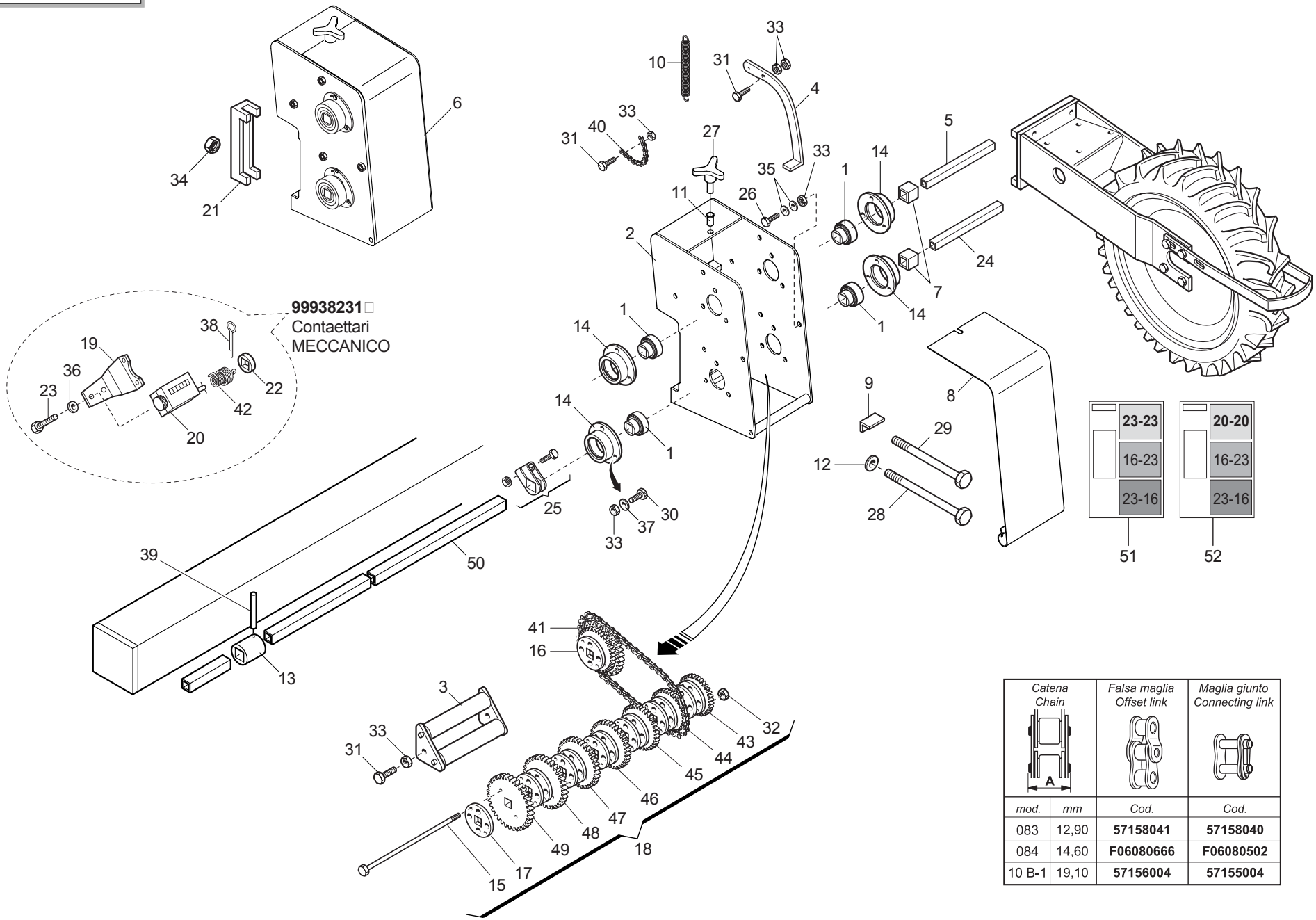


| Catena Chain | | Falsa maglia Offset link | Maglia giunto Connecting link |
|---|---|---|---|
| mod. | mm | Cod. | Cod. |
| 083 | 12,90 | **57158041** | **57158040** |
| 084 | 14,60 | **F06080666** | **F06080502** |
| 10 B-1 | 19,10 | **57156004** | **57155004** |

## *CAMBIO*

TAV. 66/123

| Pos. | Cod. | Descrizione | Description | Description | Benennung | Descripcion |
|---|---|---|---|---|---|---|
| 50 | 22250031 | ASSE TRASM.SEMINAT.L.3200 SV | AXLE- SEEDING MACH. GEARBOX L. | AXE ENTRAINEMENT SEMEUR L.3200 | ACHSE SZELEMENTANTRIEB .L.3200 | EJE TRANS.SEMBR. L.3200 SV |
| 50 | 13732200 | ASSE TRASMISSIONE L.2485 | TRANSMISSION AXLE L2485 | AXE TRANSMISSION L.2485 | sBERTRAGUNGSACHSE L.2485 | EJE TRANSMISIN L 2485 A |
| 50 | 22250275 | ASSE TRASM.SEMINAT.L.2750 SV | AXLE- SEEDING MACH. GEARBOX L. | AXE ENTRAINEMENT SEMEUR L. 275 | ACHSE SZELEMENTANTRIEB L.2750 | EJE TRANS.SEMBR. L.2750 SV |
| 50 | 22250276 | ASSE TRASM.SEMINAT.L.2200 SV | AXLE- SEEDING MACH. GEARBOX L. | AXE ENTRAINEMENT SEMEUR L. 220 | ACHSE SZELEMENT-ANTRIEB.L.2200 | EJE TRANS.SEMBR. L.2200 SV |
| 50 | 22280071 | ASSE RUOTA-CAMBIO L.550 ID | GEARBOX WHEEL AXLE L. 550 ID | AXE ROUE BOITE DE VITESSE | RADACHSE-GETRIEBE L.550 ID | EJE RUEDA-CAMBIO L.550 ID |
| 51 | 19701402 | DECAL.CAMBIO RUOTA 5,00-15 | GEARBOX WHEEL 5,00-15 STICKER | ETIQ. BOITE DE VIT. ROUE 5,00- | AUFKLEBER GETRIEBE RAD 5,00-15 | CAL. CAMBIOVEL. RUEDA 5,00-15 |
| 51 | 19701412 | DECAL.CAMBIO RUOTA 6,50-15 | GEARBOX WHEEL 6,50-15 STICKER | ETIQ. BOITE DE VIT. ROUE 6,50- | AUFKLEBER GETRIEBE RAD 6,50-15 | CAL. CAMBIOVEL. RUEDA 6,50-15 |
| 51 | 19701451 | DECAL.CAMBIO RUOTA 7,50-16 | GEARBOX WHEEL 7,50-16 STICKER | ETIQ. BOITE DE VIT. ROUE 7,50- | AUFKLEBER GETRIEBE RAD 7,50-16 | CAL. CAMBIOVEL. RUEDA 7,50-16 |
| 51 | 19703161 | DECAL.CAMBIO RUOTA 6,50-15 EST | GEARBOX WHEEL 6,50-15 STICKER | ETIQ. BOITE DE VIT. ROUE 6,50- | AUFKLEBER GETRIEBE RAD 6,50-15 | CAL. CAMBIOVEL. RUEDA 6,50-15 |
| 52 | 19701401 | DECALCOMANIA TABELLA CAMBIO SP | GEAR CHART STICKER SP | DECALC. TABLEAU BOITE DE V. SP | ABZIEHB. TABELLE GETR. SP | CALCOMANIA TABLA CAMBIO SP |
| 52 | 19701411 | DECAL.TAB.CAMB.SP RUOTA MAG. | GEAR CHART STICKER SP | DECALC. TABLEAU BOITE DE V. SP | ABZIEHB. TABELLE GETR. SP | CALCOMANIA TABLA CAMBIO SP |
| 52 | 19701450 | DECAL.CAMBIO RUOTA 7,50-16 | GEARBOX WHEEL 7,50-16 STICKER | ETIQ. BOITE DE VIT. ROUE 7,50- | AUFKLEBER GETRIEBE RAD 7,50-16 | CAL. CAMBIOVEL. RUEDA 7,50-16 |
| 52 | 19703160 | DECAL.CAMBIO R 6.5 RUOTE EST. | R 6.5 OUT. WHEELS GEARBOX TRAN | DECALC. BOITE DE VITESSE R 6.5 | AUFKLEBER GETRIEBE R 6.5 AUSSE | ETIQUETA ADHES. CAMBIO R 6.5 R |

# TAV. 66/133

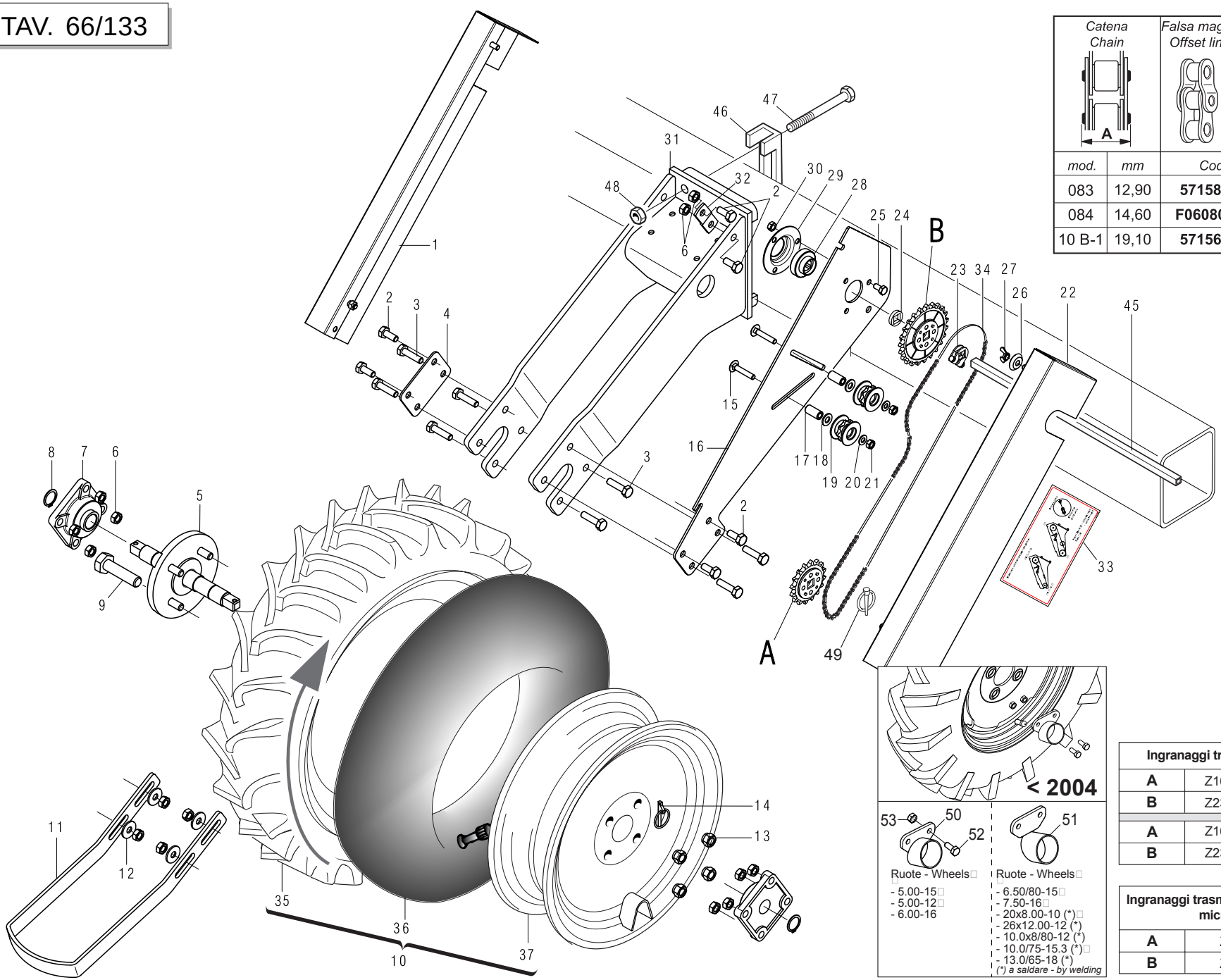


| Catena Chain | | Falsa maglia Offset link | Maglia giunto Connecting link |
|---|---|---|---|
| mod. | mm | Cod. | Cod. |
| 083 | 12,90 | **57158041** | **57158040** |
| 084 | 14,60 | **F06080666** | **F06080502** |
| 10 B-1 | 19,10 | **57156004** | **57155004** |

| | Pos. |
|---|---|
| **Z10** | 38 |
| **Z15** | 39 |
| **Z16** | 40 |
| **Z23** | 41 |
| **Z23 r.l.** | 42 |
| **Z25** | 43 |
| **Z30** | 44 |

**< 2004**

53 50 52

Ruote - Wheels
- 5.00-15
- 5.00-12
- 6.00-16

51

Ruote - Wheels
- 6.50/80-15
- 7.50-16
- 20x8.00-10 (*)
- 26x12.00-12 (*)
- 10.0x8/80-12 (*)
- 10.0/75-15.3 (*)
- 13.0/65-18 (*)

*(*) a saldare - by welding*

| Ingranaggi trasmissione seminatori | | | |
|---|---|---|---|
| **A** | Z16 | Z23 | Z23 |
| **B** | Z23 | Z16 | Z23 |
| **A** | Z16 | Z23 r.l. | Z23 |
| **B** | Z23 r.l. | Z16 | Z23 r.l. |

| Ingranaggi trasmissione spandiconcime e microgranulatore | | |
|---|---|---|
| **A** | Z10 | Z15 |
| **B** | Z30 | Z25 |



GASPARDO

## *RUOTE DI TRASMISSIONE*

TAV. 66/133

| Pos. | Cod. | Descrizione | Description | Description | Benennung | Descripcion |
|---|---|---|---|---|---|---|
| 1 | 16630360 | CARTER SX | LEFT CASE | CARTE GCH | GEHZUSE LI | CARTER IZQ |
| 1 | 15231320 | CARTER SX 7.50 | LEFT TRANSMISSION CASE | CARTER TRANSMISSION GCH | GEHZUSE ANTRIEB LI | CÀRTER TRANSMISION IZQ |
| 2 | F01020472 | VITE 10X25 5739 8.G ZN | BOLT 10X25 5739 8.G GALVANIZED | VIS 10X25 5739 8.G ZN | SCHRAUBE 10X25 5739 8.G ZN | TORNILLO 10X25 5739 8.G ZN |
| 3 | F01020481 | VITE 10X40 5739 8.G ZN | BOLT 10X40 5739 8.G GALVANIZED | VIS 10X40 5739 8.G ZN | SCHRAUBE 10X40 5739 8.G ZN | TORNILLO 10X40 5739 8.G ZN |
| 4 | 16630380 | SCONTRO 100X70-3 4F11 70X40 | STRIKER PLATE 100X70-3 4F | BUTEE 100X70-3 4F | ANSCHLAG 100X70-3 4F | ELEMENTO DE EMPALME 100X70-3 4 |
| 4 | 22270284 | ATTACCO RASCHIATERRA SP/S | SOIL SCRAPER COUPLING SP/S | FIXATION RACLEUR SP/S | KUPPLUNG ERDABSCHABER SP/S | CONEXIN RASPADOR SP/S O |
| 5 | 22270280 | ASSE RUOTA TRASM.NORMALE SP/S | NORMAL DRIVE WHEEL AXLE | AXE ROUE ENTRAINEMENT 5.00-15 | RADACHSE NORMALER ANTRIEB SP/S | EJE RUEDA TRANS. NORMAL SP/S |
| 5 | 22270281 | ASSE RUOTA TRASM.MAGG. SP/S | INCREASED DRIVE WHEEL AXLE | AXE ROUE ENTRAINEMENT 6.50-15 | RADACHSE sBERBEM. ANTRIEB SP/S | EJE RUEDA TRANS. SOBREDIMENS. |
| 5 | 15231160 | ASSE RUOTA 7.50 X 16 | WHEEL AXLE 7.50 X 16 | AXE ROUE 7.50 X 16 | RADACHSE 7.50 X 16 | EJE RUEDA 7.50 X 16 |
| 6 | F01200270 | DADO 10 5588 6.8 ZN | SCREW 10 UNI 5588 6.8 GALVANIZ | ECROU 10 UNI 5588 6.8 ZN | MUTTER 10 UNI 5588 6.8 ZN | TUERCA 10 UNI 5588 6.8 ZN |
| 7 | F04100137 | SUPPORTO FY 25 TF | SUPPORT FY 25 TF | SUPPORT FY 25 TF | HALTERUNG FY 25 TF | SOPORTE FY 25 TF |
| 8 | F02050613 | ANELLO ARR.25 UNI 7435-75 | STOP RING 25 UNI 7435-75 | BAGUE DE SERRAGE 25 UNI 7435-7 | DRAHTSPRENGRING 25 UNI 7435-75 | ANILLO PARADA 25 UNI 7435-75 |
| 9 | F01010365 | VITE 18X55 MB 5740 8.G ZN | SCREW 18X55 MB 5740 8.G ZN | VIS 18X55 MB 5740 8.G ZN | SCHRAUBE 18X55 MB 5740 8.G ZN | TORNILLO 18X55 MB 5740 8.G ZN |
| 10 | F06120114 | RUOTA COMPL.5.00-15 6PR SX | COMPL. WHEEL 20X8.00-10 LH. | ROUE COMPL. 20X8.00-10 GCH. | RAD KOMPL.20X8.00-10 LI | RUEDA COMPL.20X8.00-10 IZQ. |
| 10 | F06120113 | RUOTA COMPL.5.00-15 6PR DX | COMPL. WHEEL 5.00-15 6PR RH. | ROUE COMPL. 5.00-15 6PR DRT. | RAD KOMPL.5.00-15 6PR RE | RUEDA COMPL.5.00-15 6PR DER. |
| 10 | F06120115 | RUOTA GOMMATA LARGA SX COMPL. | UPRIGHT- WIDE RUBBERED WHEEL | MONT. ROUE CAOUTCHOUT. LARG. | STZNDER BREITES GUMMIRAD | MONT.RUEDA DE CAUCHO ANCHA |
| 10 | F06120116 | RUOTA 6.50/80-15 COMPL. | UPRIGHT- WIDE RUBBERED WHEEL | MONT. ROUE CAOUTCHOUT. LARG. | STZNDER BREITES GUMMIRAD | MONT.RUEDA DE GOMADA LARGA |
| 10 | F06120069 | RUOTA 7.50-16 AG 10 | WHEEL 7.50-16 AG10 | ROUE 7.50-16 AG10 | RAD 7.50-16 AG10 | RUEDA 7.50-16 AG10 |
| 11 | 15430090 | RASCHIATERRA | SOIL SCRAPER | RACLEUR | ERDSCHABER | RASCADOR TIERRA |
| 11 | 15430660 | RASCHIATERRA MAGGIORATO SP 530 | INCREASED SOIL-SCRAPER SP 530 | RACLEUR MAJOR. SP 530 | sBERGROSSER ERDSCHABER SP 530 | RASCADOR TIERRA OBREDIMENS. SP |
| 11 | 15231171 | RASCHIATERRA RUOTA 7,50X16 | WHEEL SOIL SCRAPER 7,50X16 | RACLEUR ROUE 7,50X16 | ERDSCHABER RAD 7,50X16 | RASCADOR TIERRA RUEDA 7,50X16 |
| 12 | F01420060 | ROND.PIANA 11X30X2,5 6593 ZN | FLAT WASHER 11X30X2-5 6593 ZN | ROND.PLATE 11X30X2-5 6593 ZN | SCHEIBE 11X30X2-5 6593 ZN | ARAND. PLANA 11X30X2-5 6593 ZN |
| 13 | F01250040 | DADO 12X1.5 COLONNETTA | COLUMN NUT M12X1.5 STUD BOLT | ECROU M12X1. 5 COLONNE | SCHRAUBBOLZENMUTTER M12X1.5 | TUERCA 12X1.5 COLUMNA |
| 13 | F01250052 | DADO 18X1,5 COLONETTA | COLUMN NUT 18X1,5 STUD BOLT | ECROU 18X1,5 COLONNE | SCHRAUBBOLZENMUTTER 18X1,5 | TUERCA 18X1,5 COLUMNA |
| 14 | F02200452 | SPINA A SCATTO D.4,4 B/80 | SNAP PIN D.4-4 B/80 | FICHE A DETENTE D. 4-4 B/80 | EINRASTSTIFT D 4-4 B/80 | CLAVIJA DE MUELLE D.4-4 B/80 |
| 15 | F01060047 | VITE 8 X45 5732 4.6 ZN | BOLT 8X45 5732 4.6 GALVANIZED | VIS 8X45 5732 4.6 ZN | SCHRAUBE 8X45 5732 4.6 ZN | TORNILLO 8X45 5732 4.6 ZN |
| 16 | 16630310 | SUPPORTO TRASMISSIONE SP540 | TRANSM.SUPPORT | SUPPORT ENTRAINEMENT | RADANTRIEB-HALTERUNG | SOPORTE TRANSMIS. |
| 16 | 15231421 | SUPPORTO TRASMISSIONE R.7.5-16 | TRANSMSUPPORT 7,50X16 | SUPPORT ENTRAINEMENT 7,50X16 | HALTERUNG GETRIEBE 7,50X16 | SOPORTE TRANSMISIN 7,50X16 |
| 17 | 18802880 | BOCCOLA 8,1X14X25,2 INOX | BUSHING 8,1X14X25,2 INOX | BOITE 8,1X14X25,2 INOX | B_CHSE 8,1X14X25,2 INOX | CASQUILLO 8,1X14X25,2 INOX |
| 18 | F01420060 | ROND.PIANA 11X30X2,5 6593 ZN | FLAT WASHER 11X30X2-5 6593 ZN | ROND.PLATE 11X30X2-5 6593 ZN | SCHEIBE 11X30X2-5 6593 ZN | ARAND. PLANA 11X30X2-5 6593 ZN |
| 19 | 19005070 | INGRANAGGIO TENDICATENA Z8 | CHAIN TIGHTENER GEAR | ENGRENAGE TENDEUR DE CHAINE | KETTENSPANNER ZAHNRAD | ENGRANAJE TENSOR DE LA CADENA |
| 20 | F01410064 | RONDELLA D10 UNI 6592 ZN | WASHER D10 UNI 6592 GALVANIZED | RONDELLE D10 UNI 6592 ZN | UNTERLEGSCHEIBE D10 UNI 6592 Z | ARANDELA D10 UNI 6592 ZN |
| 21 | F01200244 | DADO 8 5588 6.8 ZN | NUT 8 UNI 5588 6.8 GALVANIZED | ECROU 8 UNI 5588 6.8 ZN | MUTTER 8 UNI 5588 6.8 ZN | TUERCA 8 UNI 5588 6.8 ZN |
| 22 | 16630350 | CARTER DX | RIGHT CASE | CARTER DRT | GEHZUSE RE | CARTER DER |
| 22 | 15231300 | CARTER DX 7.50 | RH CASING | CARTER DRT. | GEHZUSE RECHTS | CÀRTER DER |
| 23 | 22505085 | FERMO ASSE IN LAMIERA | PLATE AXLE STOP | ARRET AXE EN TOLE | FESTSTELLVORRICHTUNG BLECHACHS | BLOQUEO EJE DE CHAPA |
| 24 | 66248218 | RONDELLA DISTAN.SPAND. | MAN. SPR. SPACER WASHER | RONDELLE ENTRETOISE EP. ENGRAI | ABSTANDSCHEIBE DsNGERSTREUER | ARANDELA DISTAN.ABONAD. |
| 25 | F01020432 | VITE 8 X16 5739 8.G ZN | BOLT 8X16 5739 8.G GALVANIZED | VIS 8X16 5739 8.G ZN | SCHRAUBE 8X16 5739 8.G ZN | TORNILLO 8X16 5739 8.G ZN |
| 26 | 22220083 | RONDELLA AD IMBOCCO | LEAD-IN WASHER | RONDELLE EMBOUTIE | TRICHTERSCHEIBE | ARANDELA DE MUESCA |
| 27 | F01240024 | DADO 8 5448 5.8 ZN | NUT 8 UNI 5448 5.8 ZN | ECROU 8 UNI 5448 5.8 ZN | MUTTER 8 UNI 5448 5.8 ZN | TUERCA 8 UNI 5448 5.8 ZN |
| 28 | 14830390 | CUSCINETTO FORO QUADRO | SQUARE-HOLED BEARING | ROULEMENT AL+SAGE CARR+ | VIERKANTLAGER | COJINETE ORIFICIO CUADRADO |
| 29 | 22230094 | SUPPORTO CUSCINETTO | BEARING SUPPORT | SUPPORT PALIER | LAGERBsCHSE | SOPORTE COJINETE |
| 30 | F01220222 | DADO TRISTOP M 8 | NUT- TRISTOP M 8 | ECROU TRISTOP M 8 | MUTTER TRISTOP M 8 | TUERCA TRISTOP M 8 |
| 31 | 16630290 | SUPPORTO RUOTA 5,00-15 | WHEEL SUPPORT 5,00-15 | SUPPORT ROUE 5,00-15 | RADLAGER 5,00-15 | SOPORTE RUEDA 5,00-15 |
| 31 | 16630300 | SUPPORTO RUOTA 6,50/80-15 | WHEEL SUPPORT 6,50/80-15 | SUPPORT ROUE 6,50/80-15 | RADLAGER 6,50/80-15 | SOPORTE RUEDA 6,50/80-15 |
| 31 | 15231141 | SUPPORTO RUOTA 7.50 | WHEEL SUPPORT 7.50 | SUPPORT ROUE 7.50 | RADLAGER 7.50 | SOPORTE RUEDA 7.50 |
| 32 | 16630320 | ATTACCO AL SUPPORTO RUOTA | SUPP. WHEEL COUPLING | FIXATION SUPPORT ROUET | KUPPLUNG HALT. KL. RAD | CONEXIN SOP. RUEDECILLA |
| 32 | 15231330 | ATTACCO AL SUPPORTO RUOTA | SUPP. WHEEL COUPLING | FIXATION SUPPORT ROUET | KUPPLUNG HALT. KL. RAD | CONEXIN SOP. RUEDECILLA |
| 33 | 19704690 | DECAL.DISP.CATENE/INGR.R.POST. | STICKER | DECALCOMANIE | ABZIEHBILDER | CALCOMANIAS |
| 34 | F06080168 | SPEZZ.CAT.ISO 10B-1 86 MAGLIE | CUT-DOWN CHAIN .ISO 10B-1 86 - | TRONCON CHAINE ISO 10B-1 86 MA | KETTENLZNGE ISO 10B-1 186 GLIE | TRECHO CADENA ISO 10B-1 86 ESL |
| 34 | F06080245 | AN.CAT.5/8 94M.ISO 10B-1 | ISO 10B-1 CHAIN LINK - 5/8 94- | CHAINE ISO 10B-1 5/8 94 MAI | KETTENRING ISO 10B-1 5/8 94 GL | ESL. CADENA ISO 10B-1 5/8 94 E |
| 35 | F06120170 | COPERTURA 5.00-15 IM 110 6PR | COVERING 500-15 IM110 4PR | COUVERTURE 500-15 IM110 4PR | MANTEL 500-15 IM110 4PR | CUBIERTA 500-15 IM110 4PR |
| 35 | F06120180 | COPERTURA 6.5/80-15 IM 110 6PR | COVERING 6.5/80-15 IM 110 2PR | COUVERTURE 6.5/80-15 IM110 4PR | MANTEL .5/80-15 IM 110 2PR | CUBIERTA 6.5/80-15 IM 110 2PR |
| 35 | F06120400 | COPERTURA 7.50-16 IM110 8PR TU | COVERING 7.50-16 IM110 8PR TU | COUVERTURE 7.50-16 IM110 8PR T | MANTEL 7.50-16 IM110 8PR TU | CUBIERTA 7.50-16 IM110 8PR TU |
| 36 | F06120134 | CAMERA 15 L 290 | CHAMBER 15 L.290 | CHAMBRE 15 L 290 | KAMMER 15 L 290 | CAMARA 15 L 290 |

# TAV. 66/133

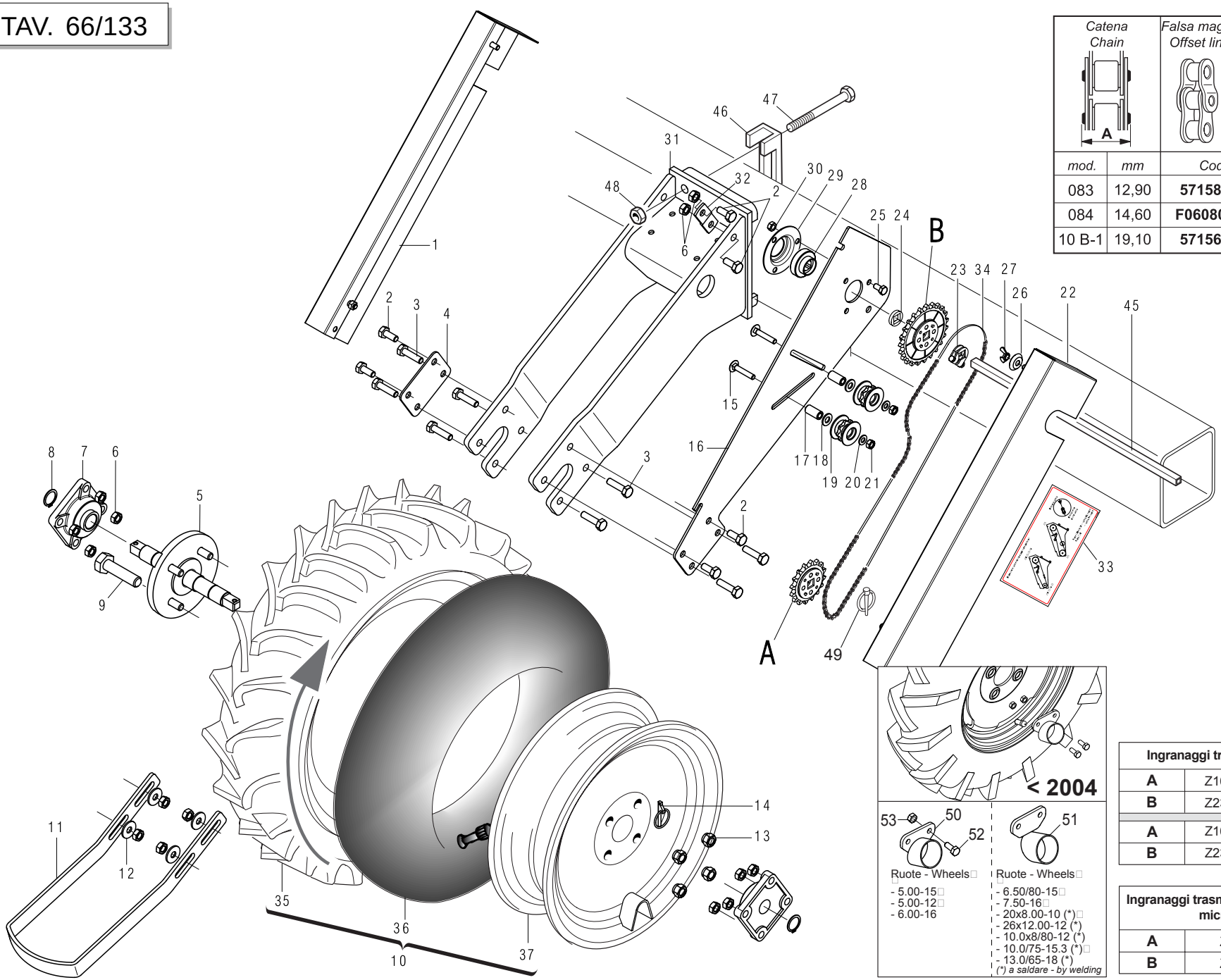


| Catena Chain | | Falsa maglia Offset link | Maglia giunto Connecting link |
|---|---|---|---|
| mod. | mm | Cod. | Cod. |
| 083 | 12,90 | **57158041** | **57158040** |
| 084 | 14,60 | **F06080666** | **F06080502** |
| 10 B-1 | 19,10 | **57156004** | **57155004** |

| | Pos. |
|---|---|
| **Z10** | 38 |
| **Z15** | 39 |
| **Z16** | 40 |
| **Z23** | 41 |
| **Z23 r.l.** | 42 |
| **Z25** | 43 |
| **Z30** | 44 |

**< 2004**

53 50 52

Ruote - Wheels
- 5.00-15
- 5.00-12
- 6.00-16

51

Ruote - Wheels
- 6.50/80-15
- 7.50-16
- 20x8.00-10 (*)
- 26x12.00-12 (*)
- 10.0x8/80-12 (*)
- 10.0/75-15.3 (*)
- 13.0/65-18 (*)

*(*) a saldare - by welding*

| Ingranaggi trasmissione seminatori | | | |
|---|---|---|---|
| **A** | Z16 | Z23 | Z23 |
| **B** | Z23 | Z16 | Z23 |
| **A** | Z16 | Z23 r.l. | Z23 |
| **B** | Z23 r.l. | Z16 | Z23 r.l. |

| Ingranaggi trasmissione spandiconcime e microgranulatore | | |
|---|---|---|
| **A** | Z10 | Z15 |
| **B** | Z30 | Z25 |



GASPARDO

## *RUOTE DI TRASMISSIONE*

TAV. 66/133

| Pos. | Cod. | Descrizione | Description | Description | Benennung | Descripcion |
|---|---|---|---|---|---|---|
| 36 | F06120135 | CAMERA 15 T 340 | CHAMBER 15 T 340 | CHAMBRE 15 T 340 | KAMMER 15 T 340 | CAMARA 15 T 340 |
| 36 | | | | | | |
| 37 | F06120192 | CERCHIO 3.00 D 15 COL.BEIGE | RIM 300 DX15"- BEIGE | JANTE 3.00 D15" COULEUR BEIGE | FELGE 300 DX15"FARBE BEIGE | LLANTA 300 DER.15"COL.BEIGE |
| 37 | F06120196 | CERCHIO 5J 15 4 FORI CANALE | RING 5JX15" 4 HOLE CHANNEL | JANTE 5JX15" 4 TROUES CANAL | REIFEN 5JX15" 4 LTCHER KANAL | LLANTA 5JX15" 4 AGUJEROS CANA |
| 37 | F06120208 | CERCHIO 7.50-16 PV TU | RING 7.50-16 PV TU | JANTE 7.50-16 PV TU | REIFEN 7.50-16 PV TU | LLANTA 7.50-16 PV TU |
| 38 | 22220113 | INGRANAGGIO Z-10 FERRO | GEAR Z-10 IRON | ENGRENAGE Z-10 FER | ZAHNRAD Z-10 EISEN | ENGRANAJE Z-10 HIERRO |
| 39 | 16630390 | PIGNONE Z-15 ZN | PINION Z-15 ZN | PIGNON Z-15 ZN | RITZE Z-15 ZN | PINION Z-15 ZN |
| 40 | 16630400 | PIGNONE Z-16 ZN. | PINION Z-16 ZN. | PIGNON Z-16 ZN. | RITZE Z-16 ZN. | PINION Z-16 ZN. |
| 41 | 16630410 | PIGNONE Z-23 ZN. | PINION Z-23 ZN. | PIGNON Z-23 ZN. | RITZE Z-23 ZN. | PINION Z-23 ZN. |
| 42 | 16630370 | INGRANAGGIO R.LIBERA Z-23 ZN | FREE WHEEL GEAR Z-23 | ENGRENAGE Z-23 ROUE LIBRE | ZAHNRAD FREILAUF Z-23 | ENGRANAJE R.LIBRE Z-23 |
| 43 | 16630420 | PIGNONE Z-25 ZN. | PINION Z-25 ZN. | PIGNON Z-25 ZN. | RITZE Z-25 ZN. | PINION Z-25 ZN. |
| 44 | 16630430 | PIGNONE Z-30 ZN. | PINION Z-30 ZN. | PIGNON Z-30 ZN. | RITZE Z-30 ZN. | PINION Z-30 ZN. |
| 45 | 20870028 | ASSE SERB.LATO TRAS.6F.L.1800 | AXLE- GEARBOX SIDE- 6-ROW L.18 | AXE RESERVOIR COTE ENTRAINEMEN | ACHSE BEHZLTER ANTRIEBSS. 6F.L | EJE DEPS. LADO TRANS. 6 FILA A |
| 45 | 22230138 | ASSE CAMBIO 4F.80-6F.45 L.1000 | GEAR SPINDLE 4-ROW 80- 6-ROW.4 | AXE BOITE DE VITESSE 4 RA | GETRIEBEACHSE 4 R. 80-6 R.45 L | EJE CAMBIO 4 FILAS. 80-6 FILAS |
| 45 | 22230142 | ASSE 4 FILE L.800 | 4-ROW SPINDLE L.800 | AXE 4 RANGEES L. 800 | ACHSE 4 REIHEN B. 800 | EJE 4 FILAS L.800 |
| 45 | 22230140 | ASSE SEMINAT.4F.CM.80 L.1200 | AXLE- 4-ROW SEEDER MACH. 80 CM | AXE SEMEUR 4 RANGEES CM. 80 L. | ACHSE SZAELEMENT 4R.CM.80 L.12 | EJE SEMBR. 4 FILAS. CM.80 L.12 |
| 46 | 15110091 | SCONTRO A U | STRIKER | BRIDE 150 MM | ANSCHLAG | ELEMENTO DE EMPALME |
| 47 | F01020235 | VITE M14X 2X220 U5737 8.8 ZG | BOLT M14X 2X220 U5737 8.8 ZG | VIS M14X 2X220 U5737 8.8 ZG | SCHRAUBE M14X 2X220 U5737 8. | TORNIL. M14X 2X220 U5737 8.8 |
| 47 | 41601101 | VITE 14 X160 5737 8.G | BOLT M 14 X160 5737 8.G | VIS M 14 X160 5737 8.G | SCHRAUBE M 14 X160 5737 8.G | TORNILLO M 14 X160 5737 8.G |
| 48 | F01200306 | DADO 14 5588 6.8 ZN | NUT 14 UNI 5588 6.8 GALVANIZED | ECROU 14 UNI 5588 6.8 ZN | MUTTER 14 UNI 5588 6.8 ZN | TUERCA 14 UNI 5588 6.8 ZN |
| 49 | F02200452 | SPINA A SCATTO D.4,4 B/80 | SNAP PIN D.4-4 B/80 | FICHE A DETENTE D. 4-4 B/80 | EINRASTSTIFT D 4-4 B/80 | CLAVIJA DE MUELLE D.4-4 B/80 |
| 50 | 16630460 | PROTEZIONE VALVOLA R5.00 | VALVE GUARD R5.00 | PROTECTION SOUPAPE R5.00 | VENTILSCHUTZ R5.00 | PROTECIËN V+LVULA R5.00 |
| 51 | 16630470 | PROTEZIONE VALVOLA R6.50 | VALVE GUARD R6.50 | PROTECTION SOUPAPE R6.50 | VENTILSCHUTZ R6.50 | PROTECIËN V+LVULA R6.50 |
| 52 | F01020440 | VITE 8 X25 5739 8.G ZN | BOLT 8X25 5739 8.G GALVANIZED | VIS 8X25 5739 8.G ZN | SCHRAUBE 8X25 5739 8.G ZN | TORNILLO 8X25 5739 8.G ZN |
| 53 | F01230034 | DADO AUTOB.NOR.8 ZN | NORMAL SELF-LOCKING NUT 8 GALV | ECROU AUTOB. NOR. 8 ZN | SELBSTSP. MUTTER NOR. 8 ZN | TUERCA AUTOB. NOR. 8 ZN |

# TAV. 66/133-A

| Ingranaggi trasmissione seminatori | | | |
|---|---|---|---|
| A | Z16 | Z23 | Z23 |
| B | Z23 | Z16 | Z23 |
| A | Z16 | Z23 r.l. | Z23 |
| B | Z23 r.l. | Z16 | Z23 r.l. |

| Ingranaggi trasmissione spandiconcime e microgranulatore | | |
|---|---|---|
| A | Z10 | Z15 |
| B | Z30 | Z25 |

| | Pos. |
|---|---|
| **Z10** | 38 |
| **Z15** | 39 |
| **Z16** | 40 |
| **Z23** | 41 |
| **Z23 r.l.** | 42 |
| **Z25** | 43 |
| **Z30** | 44 |

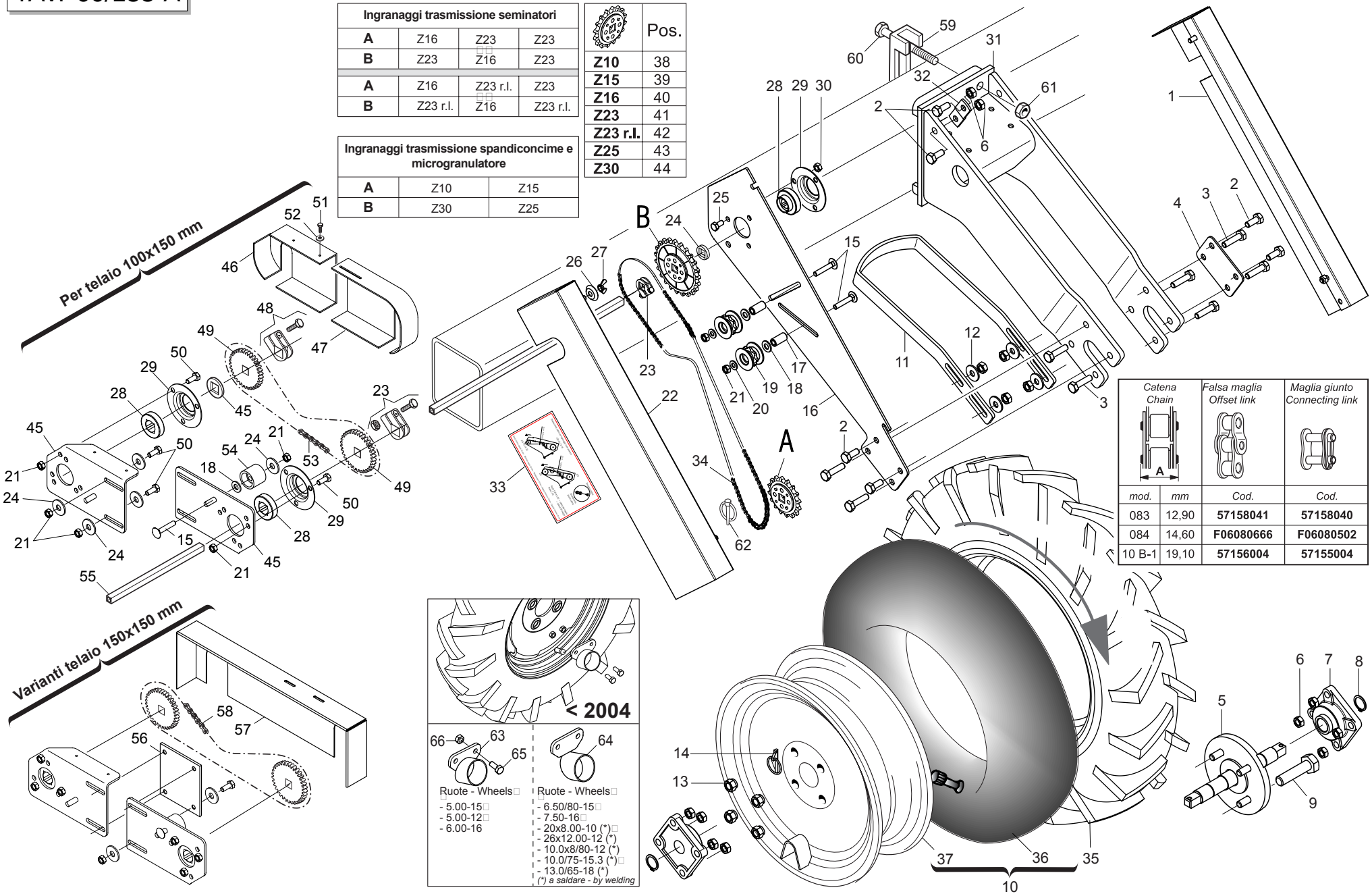


| Catena Chain | | Falsa maglia Offset link | Maglia giunto Connecting link |
|---|---|---|---|
| mod. | mm | Cod. | Cod. |
| 083 | 12,90 | **57158041** | **57158040** |
| 084 | 14,60 | **F06080666** | **F06080502** |
| 10 B-1 | 19,10 | **57156004** | **57155004** |



GASPARDO

## *RUOTE DI TRASMISSIONE ANTERIORI*

TAV. 66/133-A

| Pos. | Cod. | Descrizione | Description | Description | Benennung | Descripcion |
|---|---|---|---|---|---|---|
| 1 | 16630360 | CARTER SX | LEFT CASE | CARTE GCH | GEHZUSE LI | CARTER IZQ |
| 1 | 15231320 | CARTER SX 7.50 | LEFT TRANSMISSION CASE | CARTER TRANSMISSION GCH | GEHZUSE ANTRIEB LI | CÀRTER TRANSMISION IZQ |
| 2 | F01020472 | VITE 10X25 5739 8.G ZN | BOLT 10X25 5739 8.G GALVANIZED | VIS 10X25 5739 8.G ZN | SCHRAUBE 10X25 5739 8.G ZN | TORNILLO 10X25 5739 8.G ZN |
| 3 | F01020481 | VITE 10X40 5739 8.G ZN | BOLT 10X40 5739 8.G GALVANIZED | VIS 10X40 5739 8.G ZN | SCHRAUBE 10X40 5739 8.G ZN | TORNILLO 10X40 5739 8.G ZN |
| 4 | 16630380 | SCONTRO 100X70-3 4F11 70X40 | STRIKER PLATE 100X70-3 4F | BUTEE 100X70-3 4F | ANSCHLAG 100X70-3 4F | ELEMENTO DE EMPALME 100X70-3 4 |
| 4 | 15231440 | SUPP.RASCHIATERRA R.7,50 ANT. | SCRAPER SUPPORT 7,50 FRONT | SUPP. RACLE 7,50 AVANT | ERDSCHABERHALTERUNG 7,50 | SOPORTE RASCADOR 7,50 ANT. |
| 5 | 22270280 | ASSE RUOTA TRASM.NORMALE SP/S | NORMAL DRIVE WHEEL AXLE | AXE ROUE ENTRAINEMENT 5.00-15 | RADACHSE NORMALER ANTRIEB SP/S | EJE RUEDA TRANS. NORMAL SP/S |
| 5 | 22270281 | ASSE RUOTA TRASM.MAGG. SP/S | INCREASED DRIVE WHEEL AXLE | AXE ROUE ENTRAINEMENT 6.50-15 | RADACHSE sBERBEM. ANTRIEB SP/S | EJE RUEDA TRANS. SOBREDIMENS. |
| 5 | 15231160 | ASSE RUOTA 7.50 X 16 | WHEEL AXLE 7.50 X 16 | AXE ROUE 7.50 X 16 | RADACHSE 7.50 X 16 | EJE RUEDA 7.50 X 16 |
| 6 | F01200270 | DADO 10 5588 6.8 ZN | SCREW 10 UNI 5588 6.8 GALVANIZ | ECROU 10 UNI 5588 6.8 ZN | MUTTER 10 UNI 5588 6.8 ZN | TUERCA 10 UNI 5588 6.8 ZN |
| 7 | F04100137 | SUPPORTO FY 25 TF | SUPPORT FY 25 TF | SUPPORT FY 25 TF | HALTERUNG FY 25 TF | SOPORTE FY 25 TF |
| 8 | F02050613 | ANELLO ARR.25 UNI 7435-75 | STOP RING 25 UNI 7435-75 | BAGUE DE SERRAGE 25 UNI 7435-7 | DRAHTSPRENGRING 25 UNI 7435-75 | ANILLO PARADA 25 UNI 7435-75 |
| 9 | F01010365 | VITE 18X55 MB 5740 8.G ZN | SCREW 18X55 MB 5740 8.G ZN | VIS 18X55 MB 5740 8.G ZN | SCHRAUBE 18X55 MB 5740 8.G ZN | TORNILLO 18X55 MB 5740 8.G ZN |
| 10 | F06120113 | RUOTA COMPL.5.00-15 6PR DX | COMPL. WHEEL 5.00-15 6PR RH. | ROUE COMPL. 5.00-15 6PR DRT. | RAD KOMPL.5.00-15 6PR RE | RUEDA COMPL.5.00-15 6PR DER. |
| 10 | F06120114 | RUOTA COMPL.5.00-15 6PR SX | COMPL. WHEEL 20X8.00-10 LH. | ROUE COMPL. 20X8.00-10 GCH. | RAD KOMPL.20X8.00-10 LI | RUEDA COMPL.20X8.00-10 IZQ. |
| 10 | F06120115 | RUOTA GOMMATA LARGA SX COMPL. | UPRIGHT- WIDE RUBBERED WHEEL | MONT. ROUE CAOUTCHOUT. LARG. | STZNDER BREITES GUMMIRAD | MONT.RUEDA DE CAUCHO ANCHA |
| 10 | F06120116 | RUOTA 6.50/80-15 COMPL. | UPRIGHT- WIDE RUBBERED WHEEL | MONT. ROUE CAOUTCHOUT. LARG. | STZNDER BREITES GUMMIRAD | MONT.RUEDA DE GOMADA LARGA |
| 10 | F06120069 | RUOTA 7.50-16 AG 10 | WHEEL 7.50-16 AG10 | ROUE 7.50-16 AG10 | RAD 7.50-16 AG10 | RUEDA 7.50-16 AG10 |
| 11 | 15430090 | RASCHIATERRA | SOIL SCRAPER | RACLEUR | ERDSCHABER | RASCADOR TIERRA |
| 11 | 15430660 | RASCHIATERRA MAGGIORATO SP 530 | INCREASED SOIL-SCRAPER SP 530 | RACLEUR MAJOR. SP 530 | sBERGROSSER ERDSCHABER SP 530 | RASCADOR TIERRA OBREDIMENS. SP |
| 11 | 15231430 | RASCHIATERRA RUOTA 7,5 ANT. | FRONT SOIL-SCRAPER WHEEL 7,5 | RACLEUR ROUE AVANT 7,5 | ERDSCHABER VORDERRAD 7,5 | RASCADOR DE TIERRA RUEDA DEL. |
| 12 | F01420060 | ROND.PIANA 11X30X2,5 6593 ZN | FLAT WASHER 11X30X2-5 6593 ZN | ROND.PLATE 11X30X2-5 6593 ZN | SCHEIBE 11X30X2-5 6593 ZN | ARAND. PLANA 11X30X2-5 6593 ZN |
| 13 | F01250040 | DADO 12X1.5 COLONNETTA | COLUMN NUT M12X1.5 STUD BOLT | ECROU M12X1. 5 COLONNE | SCHRAUBBOLZENMUTTER M12X1.5 | TUERCA 12X1.5 COLUMNA |
| 13 | F01250052 | DADO 18X1,5 COLONETTA | COLUMN NUT 18X1,5 STUD BOLT | ECROU 18X1,5 COLONNE | SCHRAUBBOLZENMUTTER 18X1,5 | TUERCA 18X1,5 COLUMNA |
| 14 | F02200452 | SPINA A SCATTO D.4,4 B/80 | SNAP PIN D.4-4 B/80 | FICHE A DETENTE D. 4-4 B/80 | EINRASTSTIFT D 4-4 B/80 | CLAVIJA DE MUELLE D.4-4 B/80 |
| 15 | F01060047 | VITE 8 X45 5732 4.6 ZN | BOLT 8X45 5732 4.6 GALVANIZED | VIS 8X45 5732 4.6 ZN | SCHRAUBE 8X45 5732 4.6 ZN | TORNILLO 8X45 5732 4.6 ZN |
| 16 | 16630310 | SUPPORTO TRASMISSIONE SP540 | TRANSM.SUPPORT | SUPPORT ENTRAINEMENT | RADANTRIEB-HALTERUNG | SOPORTE TRANSMIS. |
| 16 | 15231421 | SUPPORTO TRASMISSIONE R.7.5-16 | TRANSMSUPPORT 7,50X16 | SUPPORT ENTRAINEMENT 7,50X16 | HALTERUNG GETRIEBE 7,50X16 | SOPORTE TRANSMISIN 7,50X16 |
| 17 | 18802880 | BOCCOLA 8,1X14X25,2 INOX | BUSHING 8,1X14X25,2 INOX | BOITE 8,1X14X25,2 INOX | B_CHSE 8,1X14X25,2 INOX | CASQUILLO 8,1X14X25,2 INOX |
| 18 | F01420060 | ROND.PIANA 11X30X2,5 6593 ZN | FLAT WASHER 11X30X2-5 6593 ZN | ROND.PLATE 11X30X2-5 6593 ZN | SCHEIBE 11X30X2-5 6593 ZN | ARAND. PLANA 11X30X2-5 6593 ZN |
| 19 | 19005070 | INGRANAGGIO TENDICATENA Z8 | CHAIN TIGHTENER GEAR | ENGRENAGE TENDEUR DE CHAINE | KETTENSPANNER ZAHNRAD | ENGRANAJE TENSOR DE LA CADENA |
| 20 | F01410064 | RONDELLA D10 UNI 6592 ZN | WASHER D10 UNI 6592 GALVANIZED | RONDELLE D10 UNI 6592 ZN | UNTERLEGSCHEIBE D10 UNI 6592 Z | ARANDELA D10 UNI 6592 ZN |
| 21 | F01200244 | DADO 8 5588 6.8 ZN | NUT 8 UNI 5588 6.8 GALVANIZED | ECROU 8 UNI 5588 6.8 ZN | MUTTER 8 UNI 5588 6.8 ZN | TUERCA 8 UNI 5588 6.8 ZN |
| 22 | 16630350 | CARTER DX | RIGHT CASE | CARTER DRT | GEHZUSE RE | CARTER DER |
| 22 | 15231300 | CARTER DX 7.50 | RH CASING | CARTER DRT. | GEHZUSE RECHTS | CÀRTER DER |
| 23 | 22505085 | FERMO ASSE IN LAMIERA | PLATE AXLE STOP | ARRET AXE EN TOLE | FESTSTELLVORRICHTUNG BLECHACHS | BLOQUEO EJE DE CHAPA |
| 24 | 66248218 | RONDELLA DISTAN.SPAND. | MAN. SPR. SPACER WASHER | RONDELLE ENTRETOISE EP. ENGRAI | ABSTANDSCHEIBE DsNGERSTREUER | ARANDELA DISTAN.ABONAD. |
| 25 | F01020432 | VITE 8 X16 5739 8.G ZN | BOLT 8X16 5739 8.G GALVANIZED | VIS 8X16 5739 8.G ZN | SCHRAUBE 8X16 5739 8.G ZN | TORNILLO 8X16 5739 8.G ZN |
| 26 | 22220083 | RONDELLA AD IMBOCCO | LEAD-IN WASHER | RONDELLE EMBOUTIE | TRICHTERSCHEIBE | ARANDELA DE MUESCA |
| 27 | F01240024 | DADO 8 5448 5.8 ZN | NUT 8 UNI 5448 5.8 ZN | ECROU 8 UNI 5448 5.8 ZN | MUTTER 8 UNI 5448 5.8 ZN | TUERCA 8 UNI 5448 5.8 ZN |
| 28 | 14830390 | CUSCINETTO FORO QUADRO | SQUARE-HOLED BEARING | ROULEMENT AL+SAGE CARR+ | VIERKANTLAGER | COJINETE ORIFICIO CUADRADO |
| 29 | 22230094 | SUPPORTO CUSCINETTO | BEARING SUPPORT | SUPPORT PALIER | LAGERBsCHSE | SOPORTE COJINETE |
| 30 | F01220222 | DADO TRISTOP M 8 | NUT- TRISTOP M 8 | ECROU TRISTOP M 8 | MUTTER TRISTOP M 8 | TUERCA TRISTOP M 8 |
| 31 | 16630290 | SUPPORTO RUOTA 5,00-15 | WHEEL SUPPORT 5,00-15 | SUPPORT ROUE 5,00-15 | RADLAGER 5,00-15 | SOPORTE RUEDA 5,00-15 |
| 31 | 16630300 | SUPPORTO RUOTA 6,50/80-15 | WHEEL SUPPORT 6,50/80-15 | SUPPORT ROUE 6,50/80-15 | RADLAGER 6,50/80-15 | SOPORTE RUEDA 6,50/80-15 |
| 31 | 15231141 | SUPPORTO RUOTA 7.50 | WHEEL SUPPORT 7.50 | SUPPORT ROUE 7.50 | RADLAGER 7.50 | SOPORTE RUEDA 7.50 |
| 32 | 16630320 | ATTACCO AL SUPPORTO RUOTA | SUPP. WHEEL COUPLING | FIXATION SUPPORT ROUET | KUPPLUNG HALT. KL. RAD | CONEXIN SOP. RUEDECILLA |
| 32 | 15231330 | ATTACCO AL SUPPORTO RUOTA | SUPP. WHEEL COUPLING | FIXATION SUPPORT ROUET | KUPPLUNG HALT. KL. RAD | CONEXIN SOP. RUEDECILLA |
| 33 | 19704701 | DECAL.CATENE/INGR.RUOTE ANT. | STICKER | DECALCOMANIE | ABZIEHBILDER | CALCOMANIAS |
| 34 | F06080168 | SPEZZ.CAT.ISO 10B-1 86 MAGLIE | CUT-DOWN CHAIN .ISO 10B-1 86 - | TRONCON CHAINE ISO 10B-1 86 MA | KETTENLZNGE ISO 10B-1 186 GLIE | TRECHO CADENA ISO 10B-1 86 ESL |
| 34 | F06080245 | AN.CAT.5/8 94M.ISO 10B-1 | ISO 10B-1 CHAIN LINK - 5/8 94- | CHAINE ISO 10B-1 5/8 94 MAI | KETTENRING ISO 10B-1 5/8 94 GL | ESL. CADENA ISO 10B-1 5/8 94 E |
| 35 | F06120170 | COPERTURA 5.00-15 IM 110 6PR | COVERING 500-15 IM110 4PR | COUVERTURE 500-15 IM110 4PR | MANTEL 500-15 IM110 4PR | CUBIERTA 500-15 IM110 4PR |
| 35 | F06120180 | COPERTURA 6.5/80-15 IM 110 6PR | COVERING 6.5/80-15 IM 110 2PR | COUVERTURE 6.5/80-15 IM110 4PR | MANTEL .5/80-15 IM 110 2PR | CUBIERTA 6.5/80-15 IM 110 2PR |
| 35 | F06120400 | COPERTURA 7.50-16 IM110 8PR TU | COVERING 7.50-16 IM110 8PR TU | COUVERTURE 7.50-16 IM110 8PR T | MANTEL 7.50-16 IM110 8PR TU | CUBIERTA 7.50-16 IM110 8PR TU |
| 36 | F06120134 | CAMERA 15 L 290 | CHAMBER 15 L.290 | CHAMBRE 15 L 290 | KAMMER 15 L 290 | CAMARA 15 L 290 |

# TAV. 66/133-A

| Ingranaggi trasmissione seminatori | | | |
|---|---|---|---|
| A | Z16 | Z23 | Z23 |
| B | Z23 | Z16 | Z23 |
| A | Z16 | Z23 r.l. | Z23 |
| B | Z23 r.l. | Z16 | Z23 r.l. |

| Ingranaggi trasmissione spandiconcime e microgranulatore | | |
|---|---|---|
| A | Z10 | Z15 |
| B | Z30 | Z25 |

| | Pos. |
|---|---|
| **Z10** | 38 |
| **Z15** | 39 |
| **Z16** | 40 |
| **Z23** | 41 |
| **Z23 r.l.** | 42 |
| **Z25** | 43 |
| **Z30** | 44 |

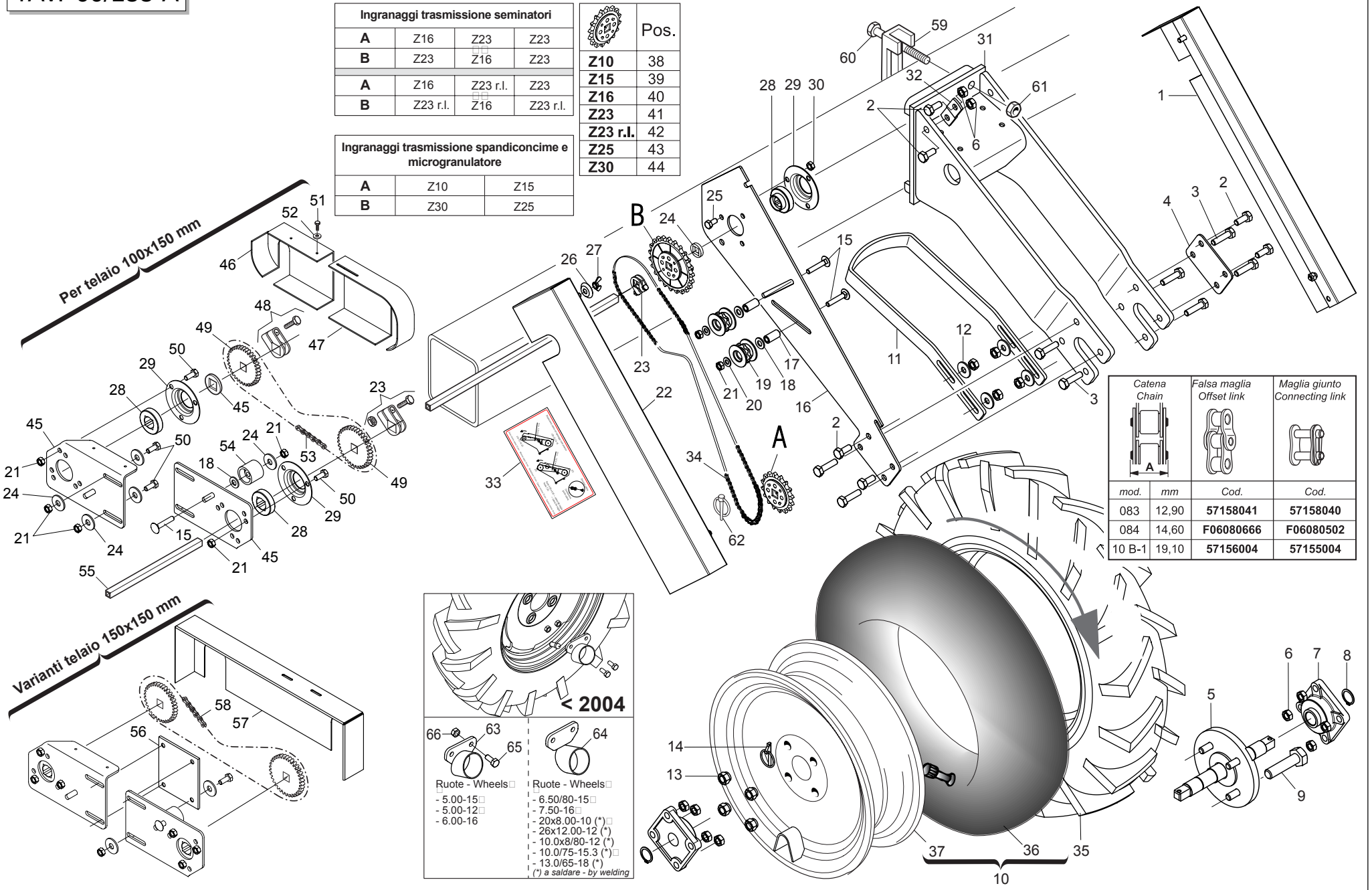


| Catena Chain | | Falsa maglia Offset link | Maglia giunto Connecting link |
|---|---|---|---|
| mod. | mm | Cod. | Cod. |
| 083 | 12,90 | **57158041** | **57158040** |
| 084 | 14,60 | **F06080666** | **F06080502** |
| 10 B-1 | 19,10 | **57156004** | **57155004** |



GASPARDO

## *RUOTE DI TRASMISSIONE ANTERIORI*

TAV. 66/133-A

| Pos. | Cod. | Descrizione | Description | Description | Benennung | Descripcion |
|---|---|---|---|---|---|---|
| 36 | F06120135 | CAMERA 15 T 340 | CHAMBER 15 T 340 | CHAMBRE 15 T 340 | KAMMER 15 T 340 | CAMARA 15 T 340 |
| 36 | | | | | | |
| 37 | F06120206 | CERCHIO 3.00 D 15 PV RAL 9001 | RING 3.00 D 15 PV RAL 9001 | JANTE 3.00 D 15 PV RAL 9001 | REIFEN 3.00 D 15 PV RAL 9001 | LLANTA 3.00 D 15 PV RAL 9001 |
| 37 | F06120207 | CERCHIO 5J 15 H2 PV RAL 9001 | RING 5J 15 H2 PV RAL 9001 | JANTE 5J 15 H2 PV RAL 9001 | REIFEN 5J 15 H2 PV RAL 9001 | LLANTA 5J 15 H2 PV RAL 9001 |
| 37 | F06120208 | CERCHIO 7.50-16 PV TU | RING 7.50-16 PV TU | JANTE 7.50-16 PV TU | REIFEN 7.50-16 PV TU | LLANTA 7.50-16 PV TU |
| 38 | 22220113 | INGRANAGGIO Z-10 FERRO | GEAR Z-10 IRON | ENGRENAGE Z-10 FER | ZAHNRAD Z-10 EISEN | ENGRANAJE Z-10 HIERRO |
| 39 | 16630390 | PIGNONE Z-15 ZN | PINION Z-15 ZN | PIGNON Z-15 ZN | RITZE Z-15 ZN | PINION Z-15 ZN |
| 40 | 16630400 | PIGNONE Z-16 ZN. | PINION Z-16 ZN. | PIGNON Z-16 ZN. | RITZE Z-16 ZN. | PINION Z-16 ZN. |
| 41 | 16630410 | PIGNONE Z-23 ZN. | PINION Z-23 ZN. | PIGNON Z-23 ZN. | RITZE Z-23 ZN. | PINION Z-23 ZN. |
| 42 | 16630370 | INGRANAGGIO R.LIBERA Z-23 ZN | FREE WHEEL GEAR Z-23 | ENGRENAGE Z-23 ROUE LIBRE | ZAHNRAD FREILAUF Z-23 | ENGRANAJE R.LIBRE Z-23 |
| 43 | 16630420 | PIGNONE Z-25 ZN. | PINION Z-25 ZN. | PIGNON Z-25 ZN. | RITZE Z-25 ZN. | PINION Z-25 ZN. |
| 44 | 16630430 | PIGNONE Z-30 ZN. | PINION Z-30 ZN. | PIGNON Z-30 ZN. | RITZE Z-30 ZN. | PINION Z-30 ZN. |
| 45 | 15470851 | FIANCO SUPP.TRASM.SPANDI | SPREADER TRANSM. SIDE SUPPORT | COTE SUPPORT TRANSM. EPAND. | SEITEN HALTER. ANTRIEB DUNGERS | COSTADO SOPORTE TRANSM. ABONAD |
| 46 | 19002830 | CARTER TRASMISSIONE SUPERIORE | TOP TRANSMISSION CASE | CARTER ENTRAINEMENT SUPERIEUR | OBERES ANTRIEBSGEHZUSE | CæRTER TRANSMISIN SUPERIOR C |
| 47 | 19002880 | CARTER INFERIORE TRASM.SPAND. | BOTTOM SPREADER TRANSM. CASE | CARTER INFERIEUR TRANSM EPAND. | UNTER. ANTRIEBSGEHZUSE DsNG.GE | CæRTER INFER. TRANSMISIN ABONC |
| 48 | 22505085 | FERMO ASSE IN LAMIERA | PLATE AXLE STOP | ARRET AXE EN TOLE | FESTSTELLVORRICHTUNG BLECHACHS | BLOQUEO EJE DE CHAPA |
| 49 | 22250007 | INGR.CON MOZZO 1/2 Z-20 SV | GEARS- W/ HUB 1/2 Z-20 SV | ENGRENAGE 1/2 Z-20 | ZAHNRAD MIT NABE 1/2 Z-20 SV | ENGRAN.CON PERNO 1/2 Z-20 SV |
| 50 | F01020436 | VITE 8 X20 5739 8.G ZN | BOLT 8X20 5739 8.G GALVANIZED | VIS 8X20 5739 8.G ZN | SCHRAUBE 8X20 5739 8.G ZN | TORNILLO 8X20 5739 8.G ZN |
| 51 | F01070074 | VITE 4,2X25 DIN 7981 | BOLT 4-2X25 DIN 7981 | VIS 4-2X25 DIN 7981 | SCHRAUBE 4-2X25 DIN 7981 | TORNILLO 4-2X25 DIN 7981 |
| 52 | F01420011 | ROND.PIANA 4,3X 16X1,5 6593 ZN | FLAT WASHER 4-3X 16X1-5 6593 G | ROND.PLATE 4-3X 16X1-5 6593 ZN | SCHEIBE 4-3X 16X1-5 6593 ZN | ARAND. PLANA 4-3X 16X1-5 6593 |
| 53 | F06080216 | AN.CAT.1/2-3/16 66 MAGLIE | CHIAN SECT.1/2/3/16 66 LINKS | 0 | 0 | 0 |
| 54 | 66248207 | TENDICATENA SPAND. SP-520 | CHAIN TENSIONER | TENDEUR DE CHAINE EPAND. ENGR. | KETTENSPANNER DsNGERSTR. SP-52 | TENSOR DE CADENA ABON. SP-520 |
| 55 | 20870028 | ASSE SERB.LATO TRAS.6F.L.1800 | AXLE- GEARBOX SIDE- 6-ROW L.18 | AXE RESERVOIR COTE ENTRAINEMEN | ACHSE BEHZLTER ANTRIEBSS. 6F.L | EJE DEPS. LADO TRANS. 6 FILA A |
| 55 | 22230138 | ASSE CAMBIO 4F.80-6F.45 L.1000 | GEAR SPINDLE 4-ROW 80- 6-ROW.4 | AXE BOITE DE VITESSE 4 RA | GETRIEBEACHSE 4 R. 80-6 R.45 L | EJE CAMBIO 4 FILAS. 80-6 FILAS |
| 55 | 22230142 | ASSE 4 FILE L.800 | 4-ROW SPINDLE L.800 | AXE 4 RANGEES L. 800 | ACHSE 4 REIHEN B. 800 | EJE 4 FILAS L.800 |
| 55 | 22230140 | ASSE SEMINAT.4F.CM.80 L.1200 | AXLE- 4-ROW SEEDER MACH. 80 CM | AXE SEMEUR 4 RANGEES CM. 80 L. | ACHSE SZAELEMENT 4R.CM.80 L.12 | EJE SEMBR. 4 FILAS. CM.80 L.12 |
| 56 | 15272470 | PIASTRA PROLUNGA TRASM.SPAND. | TRANSMISSION EXTENSION PLATE | PLAQUE RALL. TRANSMISSION | VERL.PLATTE GETRIEBE | PLACA PROL. TRANSMISIËN |
| 57 | 15473080 | CARTER RINVIO DA ANT.A POST. | INTERMEDIATE CASE | CARTER TRANSMISSION | VORGELEGEGEHZUSE | CµRTER TRANSMISIN C |
| 58 | F06080038 | CATENA 1/2 ISO 083 74 MAGLIE | CHAIN 1/2 ISO 083 74 LINKS | CHAINE 1/2 ISO 083 74 MAILLES | KETTE 1/2 ISO 083 94 GLIEDER | CADENA 1/2 ISO 083 74 ESLABNEL |
| 59 | 15110091 | SCONTRO A U | STRIKER | BRIDE 150 MM | ANSCHLAG | ELEMENTO DE EMPALME |
| 60 | 41602124 | VITE 14X220 5737 8.G ZN | BOLT 14X220 5737 8.G GALVANIZ. | VIS 14X220 5737 8.G ZN | SCHRAUBE 14X220 5737 8.G ZN | TORNILLO 14X220 5737 8.G ZN |
| 60 | 41601101 | VITE 14 X160 5737 8.G | BOLT M 14 X160 5737 8.G | VIS M 14 X160 5737 8.G | SCHRAUBE M 14 X160 5737 8.G | TORNILLO M 14 X160 5737 8.G |
| 61 | F01200306 | DADO 14 5588 6.8 ZN | NUT 14 UNI 5588 6.8 GALVANIZED | ECROU 14 UNI 5588 6.8 ZN | MUTTER 14 UNI 5588 6.8 ZN | TUERCA 14 UNI 5588 6.8 ZN |
| 62 | F02200452 | SPINA A SCATTO D.4,4 B/80 | SNAP PIN D.4-4 B/80 | FICHE A DETENTE D. 4-4 B/80 | EINRASTSTIFT D 4-4 B/80 | CLAVIJA DE MUELLE D.4-4 B/80 |
| 63 | 16630460 | PROTEZIONE VALVOLA R5.00 | VALVE GUARD R5.00 | PROTECTION SOUPAPE R5.00 | VENTILSCHUTZ R5.00 | PROTECIËN V+LVULA R5.00 |
| 64 | 16630470 | PROTEZIONE VALVOLA R6.50 | VALVE GUARD R6.50 | PROTECTION SOUPAPE R6.50 | VENTILSCHUTZ R6.50 | PROTECIËN V+LVULA R6.50 |
| 65 | F01020440 | VITE 8 X25 5739 8.G ZN | BOLT 8X25 5739 8.G GALVANIZED | VIS 8X25 5739 8.G ZN | SCHRAUBE 8X25 5739 8.G ZN | TORNILLO 8X25 5739 8.G ZN |
| 66 | F01230034 | DADO AUTOB.NOR.8 ZN | NORMAL SELF-LOCKING NUT 8 GALV | ECROU AUTOB. NOR. 8 ZN | SELBSTSP. MUTTER NOR. 8 ZN | TUERCA AUTOB. NOR. 8 ZN |

TAV. 66/320

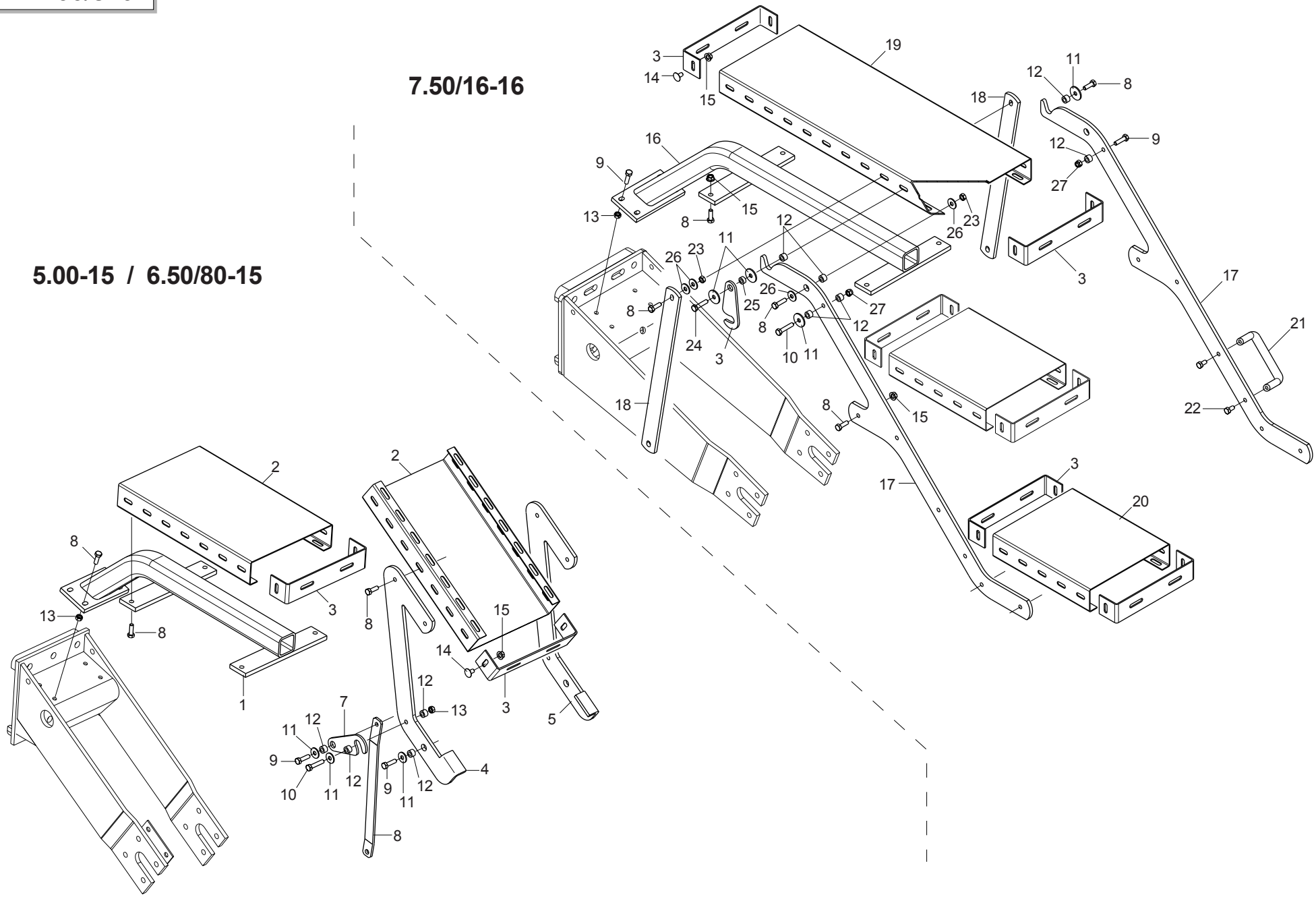




GASPARDO

## *SCALETTA RUOTE PORTANTI*

TAV. 66/320

| Pos. | Cod. | Descrizione | Description | Description | Benennung | Descripcion |
|---|---|---|---|---|---|---|
| 1 | 15171840 | SUPPORTO SCALETTA R.5/6,5 | STEP LADDER SUPPORT R.5/6,5 | SUPPORT ECHELLE R.5/6,5 | STUFENHALTERUNG R.5/6,5 | SOPORTE ESCALERILLA R.5/6,5 |
| 2 | 15312290 | GRADINO | STEP | MARCHE | STUFE | ESCALN T |
| 3 | 07000379 | TERMINALE PEDANA ZN | GALVANIZED PLATFORM END | PIECE TERMINALE MARCHEPIED ZN | LAUFSTEGABSCHLUSS ZN | TERMINAL PLATAFORMA ZN |
| 4 | 16013510 | SUPPORTO SX PEDANA | LH FOOTPLATE SUPPORT | SUPPORT GCH.MARCHEPIED | TRITTBRETTHALTERUNG LI | SOPORTE IZQ. PLATAFORMA |
| 5 | 16013500 | SUPPORTO DX PEDANA | RH FOOTPLATE SUPPORT | SUPPORT DRT. MARCHEPIED | RE TRITTBRETTHALTERUNG | SOPORTE DER. PLATAFORMA |
| 6 | 15211540 | SUPPORTO SX SCALETTA | LEFT SUPPORT | SUPPORT GCH | HALTERUNG LI | SOPORTE IZQ |
| 7 | 15171791 | FERMO SCALETTA ZN | RAMP STOP | BUTEE PETITE ECHELLE | LEITERSPERRE | BLOQUEO ESCALERA |
| 8 | F01020440 | VITE 8 X25 5739 8.G ZN | BOLT 8X25 5739 8.G GALVANIZED | VIS 8X25 5739 8.G ZN | SCHRAUBE 8X25 5739 8.G ZN | TORNILLO 8X25 5739 8.G ZN |
| 9 | F01020445 | VITE 8 X30 5739 8.G ZN | BOLT 8X30 5739 8.G GALVANIZED | VIS 8X30 5739 8.G ZN | SCHRAUBE 8X30 5739 8.G ZN | TORNILLO 8X30 5739 8.G ZN |
| 10 | F01020450 | VITE 8 X40 5739 8.G ZN | BOLT 8X40 5739 8.G GALVANIZED | VIS 8X40 5739 8.G ZN | SCHRAUBE 8X40 5739 8.G ZN | TORNILLO 8X40 5739 8.G ZN |
| 11 | F01420049 | ROSETTA M8 8,4X32X2 U6593 ZG | WASHER M8 8,4X32X2 U6593 ZG | RONDELLE M8 8,4X32X2 U6593 ZG | SCHEIBE M8 8,4X32X2 U6593 ZG | ARANDELA M8 8,4X32X2 U6593 ZG |
| 12 | 18801580 | BOCCOLA 8,5 X15 X10 ZN | BUSH 8.5 X15 X10 | DOUILLE 8,5 X15 X10 | BUCHSE 8,5 X15 X10 | MANGUITO 8,5 X15 X10 |
| 13 | F01200244 | DADO 8 5588 6.8 ZN | NUT 8 UNI 5588 6.8 GALVANIZED | ECROU 8 UNI 5588 6.8 ZN | MUTTER 8 UNI 5588 6.8 ZN | TUERCA 8 UNI 5588 6.8 ZN |
| 14 | F01030495 | VITE TTCN 90' M8X16 ZN | TTCN 90' BOLT M8X16 GALVANIZED | VIS TTCN 90' M8X16 ZN | SCHRAUBE TTCN 90' M8X16 ZN | TORNILLO TTCN 90' M8x16 ZN |
| 15 | F01260043 | DADO FLANG.M8 DIN 6923 8.8 ZN | FLANGE NUT M8 DIN 6923 8.8 GAL | ECROU BRIDE .M8 DIN 6923 8.8 Z | GEFLANSCHTE MUTTER M8 DIN6923 | TUERCA BRIDA M8 DIN 6923 8.8 Z |
| 16 | 15171750 | SUPPORTO PEDANA | FOOTBOARD SUPPORT | SUPPORT MARCHEPIED | TRITTBRETTHALTERUNG | SOPORTE PLATAFORMA |
| 17 | 15171781 | FIANCO SUPPORTO PEDANE | PLATFORM SUPPORT | SUPPORT MARCHEPIED | LAUFSTEGHALTERUNG | SOPORTE PLATAFORMAS COMPLETO |
| 18 | 15171800 | APPOGGIO DI RINFORZO | REINFORCEMENT REST | REPOSE DE RENFORCEMENT | VERSTZRKUNGSAUFLAGE | APOYADOR DE REFUERZO |
| 19 | 15171760 | PEDANA 250X720X60 SP2 ZN | PLATFORM 250X720X60 SP2 ZN | MARCHEPIED 250X720X60 SP2 ZN | TRITTBRETT 250X720X60 SP2 ZN | PLATAFORMA 250X720X60 SP2 ZN |
| 20 | 15171770 | PEDANA 250X300X60 SP2 ZN | | | | |
| 21 | 67008045 | MANIGLIA | HANDLE | POIGNEE | GRIFF | MANIJA |
| 22 | F01020432 | VITE 8 X16 5739 8.G ZN | BOLT 8X16 5739 8.G GALVANIZED | VIS 8X16 5739 8.G ZN | SCHRAUBE 8X16 5739 8.G ZN | TORNILLO 8X16 5739 8.G ZN |
| 23 | F01220222 | DADO TRISTOP M 8 | NUT- TRISTOP M 8 | ECROU TRISTOP M 8 | MUTTER TRISTOP M 8 | TUERCA TRISTOP M 8 |
| 24 | F01020449 | VITE 8 X35 5739 8.G ZN | BOLT 8X35 5739 8.G GALVANIZED | VIS 8X35 5739 8.G ZN | SCHRAUBE 8X35 5739 8.G ZN | TORNILLO 8X35 5739 8.G ZN |
| 25 | 20980050 | BOCCOLA 15X7X8,5 ZN | BUSHING 15X7X8-5 ZN | BOITE 15X7X8-5 ZN | BsCHSE 15X7X8-5 ZN | CASQUILLO 15X7X8-5 ZN |
| 26 | F01420048 | ROND.PIANA 9X 24X2 6593 ZN | FLAT WASHER 9X 24X2 6593 GALV. | ROND. PLATE 9X 24X2 6593 ZN | SCHEIBE 9X 24X2 6593 ZN | ARAND. PLANA 9X 24X2 6593 ZN |
| 27 | F01230034 | DADO AUTOB.NOR.8 ZN | NORMAL SELF-LOCKING NUT 8 GALV | ECROU AUTOB. NOR. 8 ZN | SELBSTSP. MUTTER NOR. 8 ZN | TUERCA AUTOB. NOR. 8 ZN |

TAV. 66/282

# SEMINA SU COLMI

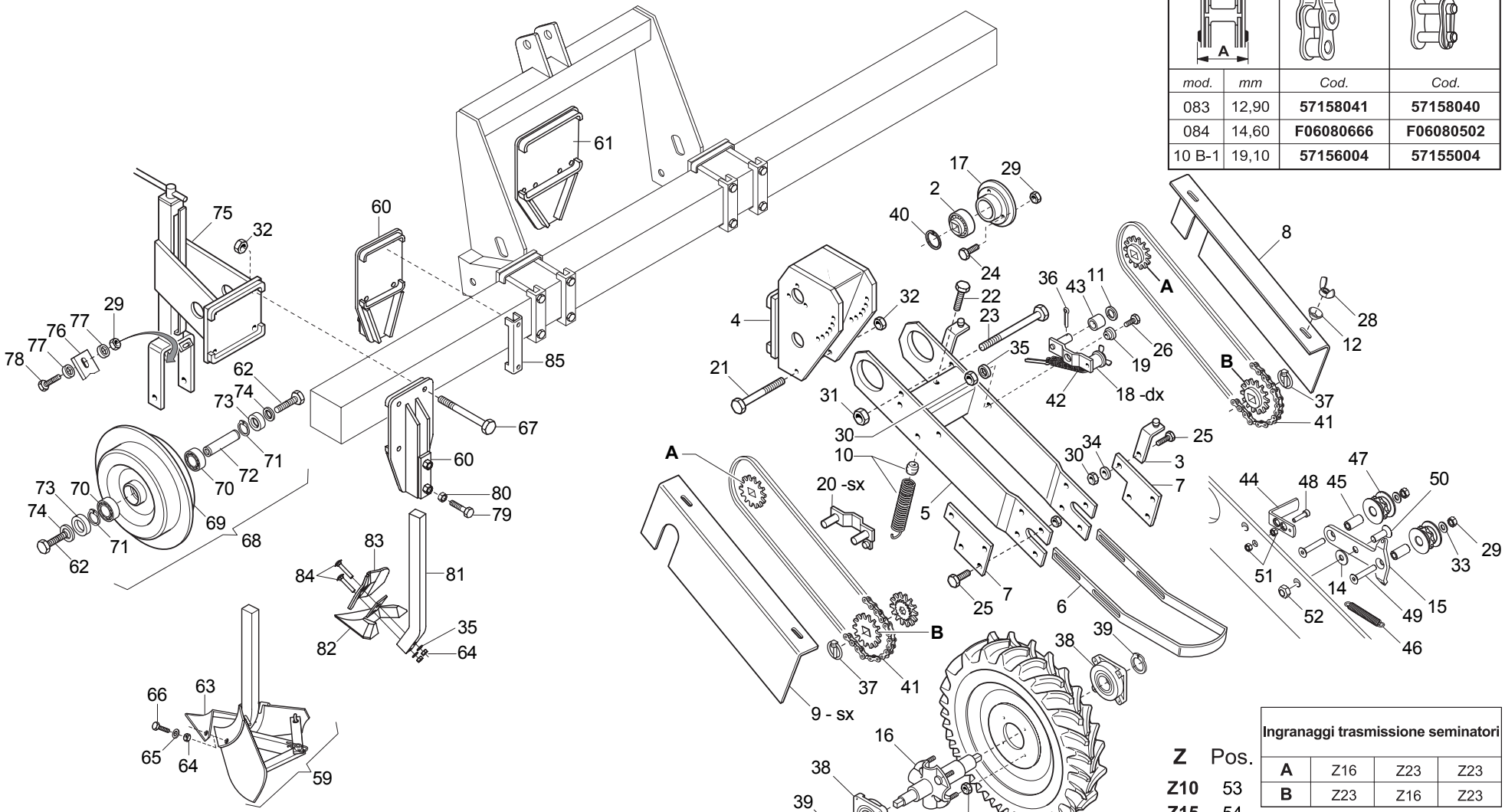


| Catena Chain | | Falsa maglia Offset link | Maglia giunto Connecting link |
|---|---|---|---|
| mod. | mm | Cod. | Cod. |
| 083 | 12,90 | **57158041** | **57158040** |
| 084 | 14,60 | **F06080666** | **F06080502** |
| 10 B-1 | 19,10 | **57156004** | **57155004** |

| Z | Pos. |
|---|---|
| **Z10** | 53 |
| **Z15** | 54 |
| **Z16** | 55 |
| **Z23** | 56 |
| **Z25** | 57 |
| **Z30** | 58 |

| Ingranaggi trasmissione seminatori | | | |
|---|---|---|---|
| **A** | Z16 | Z23 | Z23 |
| **B** | Z23 | Z16 | Z23 |

| Ingranaggi trasmissione spandiconcime e microgranulatore | | |
|---|---|---|
| **A** | Z10 | Z15 |
| **B** | Z30 | Z25 |



GASPARDO

## *SEMINA SU COLMI*

TAV. 66/282

| Pos. | Cod. | Descrizione | Description | Description | Benennung | Descripcion |
|---|---|---|---|---|---|---|
| 1 | F06120114 | RUOTA COMPL.5.00-15 6PR SX | COMPL. WHEEL 20X8.00-10 LH. | ROUE COMPL. 20X8.00-10 GCH. | RAD KOMPL.20X8.00-10 LI | RUEDA COMPL.20X8.00-10 IZQ. |
| 2 | 14830390 | CUSCINETTO FORO QUADRO | SQUARE-HOLED BEARING | ROULEMENT AL+SAGE CARR+ | VIERKANTLAGER | COJINETE ORIFICIO CUADRADO |
| 3 | 15430110 | SUPPORTO CARTER | CASE SUPPORT | SUPPORT CARTER | HALTERUNG GEHZUSE | SOPORTE CæRTER |
| 4 | 15430751 | ATTACCO RUOTE REGOLABILI | ADJUSTABLE WHEELS COVER | FIXATION ROUES REGLABLES | REGULIERBARE RADKUPPLUNG | CONEXIN RUEDAS REGULABLES O |
| 5 | 15430780 | SUPPORTO RUOTA REGOLABILE | ADJUSTABLE WHEEL SUPPORT | SUPPORT ROUE REGLABLE | REGULIERBARES RADLAGER | SOPORTE RUEDA REGULABLE |
| 6 | 15430920 | RASCHIATERRA | SOIL SCRAPER | RACLEUR | ERDSCHABER | RASCADOR DE TIERRA |
| 7 | 15430930 | SUPPORTO RASCHIATERRA | SOIL SCRAPER SUPPORT | SUPPORT RACLEUR | HALTERUNG ERDSCHABER | SOPORTE RASCADOR TIERRA |
| 8 | 15430980 | CARTER | CASE | CARTER | GEHZUSE | CæRTER |
| 9 | 15431050 | CARTER SX RUOTA REGOLABILE | ADJUSTABLE LEFT WHEEL CASE | CARTER GCH ROUE REGLABLE | GEHZUSE LI REGULIERBARES RAD | CæRTER IZQ RUEDA REGULABLE |
| 10 | 15431180 | MOLLA RUOTE REGOLABILI | ADJUSTABLE WHEEL SPRING | RESSORT ROUES REGLABLES F | EDER EINSTELLB. RZDER M | UELLE RUOTAS REGULABLES A |
| 11 | 20970085 | RONDELLA 40X4X13 | WASHER 40X4X13 | RONDELLE 40X4X13 | UNTERLEGSCHEIBE 40X4X13 | ARANDELA 40X4X13 |
| 12 | 22220083 | RONDELLA AD IMBOCCO | LEAD-IN WASHER | RONDELLE EMBOUTIE | TRICHTERSCHEIBE | ARANDELA DE MUESCA |
| 13 | F01410051 | RONDELLA D8 UNI 6592 ZN | WASHER D8 UNI 6592 GALVANIZED | RONDELLE D8 UNI 6592 ZN | UNTERLEGSCHEIBE D8 UNI 6592 ZN | ARANDELA D8 UNI 6592 ZN |
| 14 | F01420061 | RONDELLA 11X40X2,5 6593 ZN | WASHER 11X40X2.5 6593 ZN | RONDELLE 11X40X2,5 6593 ZN | UNTERLEGSCHEIBE 11X40X2,5 6593 | ARANDELA 11X40X2,5 6593 ZN |
| 15 | 15830460 | TENDICATENA SEM. R | SEEDER CHAIN TIGHTENER R | TENDEUR DE CHAINE SEMEUR R | KETTENSPANNER SZELEMENT R | TENSOR DE CADENA SEMBRADOR R |
| 16 | 22270280 | ASSE RUOTA TRASM.NORMALE SP/S | NORMAL DRIVE WHEEL AXLE | AXE ROUE ENTRAINEMENT 5.00-15 | RADACHSE NORMALER ANTRIEB SP/S | EJE RUEDA TRANS. NORMAL SP/S |
| 17 | 22310011 | FLANGIA CAMBIO DP | GEARBOX FLANGE DP | BRIDE BOITE DE VITESSE DP | FLANSCH GETRIEBE DP | BRIDA CAMBIO DP |
| 18 | 22310016 | TENDICATENA DX TRASM.RUOTA DP | WHEEL TRANSM. RIGHT CHAIN TIGH | TEND. DE CH. DRT. ENTRAIN ROUE | RECHTER KETTENSPANNER RADANTRI | TENSOR DE CADENA DER. TRANSM.R |
| 19 | 22310017 | BOCCOLA TENDICATENA DP | BUSHING- CHAIN DP | BOITE TENDEUR DE CHAINE DP | BsCHSE KETTENSPANNER DP | CASQUILLO TENSOR DE CADENA DP |
| 20 | 22310027 | TENDICATENA SX TRASM.RUOTA DP | LH TRANSM.WHEEL CHAIN TIGHT.DP | TEND.CHAINE GCH.TRANS.ROUE DPL | I. KETTENSPANNER ANTR.RAD DP T | ENSOR DE CADENA IZQ TRANSM.RUI |
| 21 | 41601125 | VITE 14X180 5737 8.G | SCREW 14X180 5737 8.G | VIS 14X180 5737 8.G | SCHRAUBE 14X180 5737 8.G | TORNILLO 14X180 5737 8.G |
| 22 | F01020256 | VITE 16X60 5737 8.G ZN | BOLT 16X60 5737 8.G GALVANIZED | VIS 16X60 5737 8.G ZN | SCHRAUBE 16X60 5737 8.G ZN | TORNILLO 16X60 5737 8.G ZN |
| 23 | F01020187 | VITE 12X190 5737 8.G ZN | BOLT 12X190 5737 8.G GALVANIZ | VIS 12X190 5737 8.G ZN | SCHRAUBE 12X190 5737 8.G ZN | TORNILLO 12X1900 5737 8.G ZN |
| 24 | F01020449 | VITE 8 X35 5739 8.G ZN | BOLT 8X35 5739 8.G GALVANIZED | VIS 8X35 5739 8.G ZN | SCHRAUBE 8X35 5739 8.G ZN | TORNILLO 8X35 5739 8.G ZN |
| 25 | F01020472 | VITE 10X25 5739 8.G ZN | BOLT 10X25 5739 8.G GALVANIZED | VIS 10X25 5739 8.G ZN | SCHRAUBE 10X25 5739 8.G ZN | TORNILLO 10X25 5739 8.G ZN |
| 26 | F01020476 | VITE 10X30 5739 8.G ZN | BOLT 10X30 5739 8.G GALVANIZED | VIS 10X30 5739 8.G ZN | SCHRAUBE 10X30 5739 8.G ZN | TORNILLO 10X30 5739 8.G ZN |
| 27 | F01020479 | VITE 10X35 5739 8.G ZN | BOLT 10X35 5739 8.G GALVANIZED | VIS 10X35 5739 8.G ZN | SCHRAUBE 10X35 5739 8.G ZN | TORNILLO 10X35 5739 8.G ZN |
| 28 | F01240024 | DADO 8 5448 5.8 ZN | NUT 8 UNI 5448 5.8 ZN | ECROU 8 UNI 5448 5.8 ZN | MUTTER 8 UNI 5448 5.8 ZN | TUERCA 8 UNI 5448 5.8 ZN |
| 29 | F01200244 | DADO 8 5588 6.8 ZN | NUT 8 UNI 5588 6.8 GALVANIZED | ECROU 8 UNI 5588 6.8 ZN | MUTTER 8 UNI 5588 6.8 ZN | TUERCA 8 UNI 5588 6.8 ZN |
| 30 | F01200270 | DADO 10 5588 6.8 ZN | SCREW 10 UNI 5588 6.8 GALVANIZ | ECROU 10 UNI 5588 6.8 ZN | MUTTER 10 UNI 5588 6.8 ZN | TUERCA 10 UNI 5588 6.8 ZN |
| 31 | F01200293 | DADO 12 5588 6.8 ZN | NUT 12 UNI 5588 6.8 GALVANIZED | ECROU 12 UNI 5588 6.8 ZN | MUTTER 12 UNI 5588 6.8 ZN | TUERCA 12 UNI 5588 6.8 ZN |
| 32 | F01200306 | DADO 14 5588 6.8 ZN | NUT 14 UNI 5588 6.8 GALVANIZED | ECROU 14 UNI 5588 6.8 ZN | MUTTER 14 UNI 5588 6.8 ZN | TUERCA 14 UNI 5588 6.8 ZN |
| 33 | F01250040 | DADO 12X1.5 COLONNETTA | COLUMN NUT M12X1.5 STUD BOLT | ECROU M12X1. 5 COLONNE | SCHRAUBBOLZENMUTTER M12X1.5 | TUERCA 12X1.5 COLUMNA |
| 34 | F01420060 | ROND.PIANA 11X30X2,5 6593 ZN | FLAT WASHER 11X30X2-5 6593 ZN | ROND.PLATE 11X30X2-5 6593 ZN | SCHEIBE 11X30X2-5 6593 ZN | ARAND. PLANA 11X30X2-5 6593 ZN |
| 35 | F01430023 | RONDELLA D10 DIN 6798 D.INT.ZN | WASHER D10 DIN 6798 D.INT.ZN | RONDELLE D10 DIN 6798 D. INT. | UNT. SCHEIBE D10 DIN 6798 D.IN | ARANDELA D10 DIN 6798 D.INT.ZN |
| 36 | F02200162 | COPIGLIA 3 X20 1336 ZN | SPLIT PIN 3 X20 1336 GALVAN. | GOUPILLE 3 X20 1336 ZN | SPLINT 3 X20 1336 ZN | PASADOR 3 X20 1336 ZN |
| 37 | F02200452 | SPINA A SCATTO D.4,4 B/80 | SNAP PIN D.4-4 B/80 | FICHE A DETENTE D. 4-4 B/80 | EINRASTSTIFT D 4-4 B/80 | CLAVIJA DE MUELLE D.4-4 B/80 |
| 38 | F04100137 | SUPPORTO FY 25 TF | SUPPORT FY 25 TF | SUPPORT FY 25 TF | HALTERUNG FY 25 TF | SOPORTE FY 25 TF |
| 39 | F02050613 | ANELLO ARR.25 UNI 7435-75 | STOP RING 25 UNI 7435-75 | BAGUE DE SERRAGE 25 UNI 7435-7 | DRAHTSPRENGRING 25 UNI 7435-75 | ANILLO PARADA 25 UNI 7435-75 |
| 40 | F02050631 | ANELLO ARR.47 UNI 7437-75 | STOP RING 47 UNI 7437-75 | BAGUE ARRET 47 UNI 7437-75 | RING 47 UNI 7437-75 | ANILLO PARADA 47 UNI 7437-75 |
| 41 | F06080170 | SPEZ.CAT.ISO 10B-1 98 MAGLIE | CUT-DOWN CHAIN .ISO 10B-1 98 - | TRONCON CHAINE ISO 10B-1 98 MA | KETTENLZNGE ISO 10B-1 98 GLIED | TRECHO CADENA ISO 10B-1 98 ESL |
| 42 | 65337035 | MOLLA TENDICATENA RUOTA DP | CHAIN TIGHTENER SPRING DP | RESSORT TENDEUR DE CHAINE ROUE | FEDER KETTENSPANNER RAD DP | MUELLE TENSOR DE LA CADENA RUE |
| 43 | 66248100 | RULLO TEND. SP | TIGHTENER ROLLER SP | ROULEAU TENDEUR SP | SPANNERROLLE SP | RODILLO TENSOR SP |
| 44 | 17130140 | LEVA CAMBIO | GEAR LEVER | LEVIER BOITE DE VITESSE | GETRIEBE HEBEL | PALANCA DE CAMBIO |
| 45 | 18802610 | BOCCOLA 8,1X14X28 INOX | BUSHING 8,1X14X28 INOX | BOITE 8,1X14X28 INOX | BUCHSE 8,1X14X28 INOX | MANGUITO 8,1X14X28 INOX |
| 46 | 18902970 | MOLLA TRAZ.CAMBIO ZN SP | GALVAN. GEAR TRACT. SPRING SP | RESS. TRACT. BOITE VITESSE ZN | ZUGFEDER GETRIEBE ZN SP | MUELLE TRAC. CAMBIO ZN SP |
| 47 | 19005070 | INGRANAGGIO TENDICATENA Z8 | CHAIN TIGHTENER GEAR | ENGRENAGE TENDEUR DE CHAINE | KETTENSPANNER ZAHNRAD | ENGRANAJE TENSOR DE LA CADENA |
| 48 | F01040064 | VITE 6 X25 5931 ZN | BOLT 6 X25 5931 8.G GALVANIZ. | VIS 6 X25 5931 8.G ZN | SCHRAUBE 6 X25 5931 8.G ZN | TORNILLO 6 X25 5931 8.G ZN |
| 49 | F01030061 | VITE M 8X1,25X 45 U5933 8.8 ZG | | | | |
| 50 | F01030086 | VITE 10X30 5933 8.G ZN | GALVAN. SCREW 10X30 5933 8.G | VIS 10X30 5933 8.G ZN | SCHRAUBE 10X30 5933 8.G ZN | TORNILLO 10X30 5933 8.G ZN |
| 51 | F01200232 | DADO 6 5588 6.8 ZN | NUT 6 UNI 5588 6.8 GALVANIZED | ECROU 6 UNI 5588 6.8 ZN | MUTTER 6 UNI 5588 6.8 ZN | TUERCA 6 UNI 5588 6.8 ZN |
| 52 | F01220233 | DADO TRISTOP M10 | NUT TRISTOP M10 | ECROU TRISTOP M10 | MUTTER TRISTOP M10 | TUERCA TRISTOP M10 |
| 53 | 22220113 | INGRANAGGIO Z-10 FERRO | GEAR Z-10 IRON | ENGRENAGE Z-10 FER | ZAHNRAD Z-10 EISEN | ENGRANAJE Z-10 HIERRO |
| 54 | 16630390 | PIGNONE Z-15 ZN | PINION Z-15 ZN | PIGNON Z-15 ZN | RITZE Z-15 ZN | PINION Z-15 ZN |
| 55 | 16630400 | PIGNONE Z-16 ZN. | PINION Z-16 ZN. | PIGNON Z-16 ZN. | RITZE Z-16 ZN. | PINION Z-16 ZN. |

TAV. 66/282

# SEMINA SU COLMI

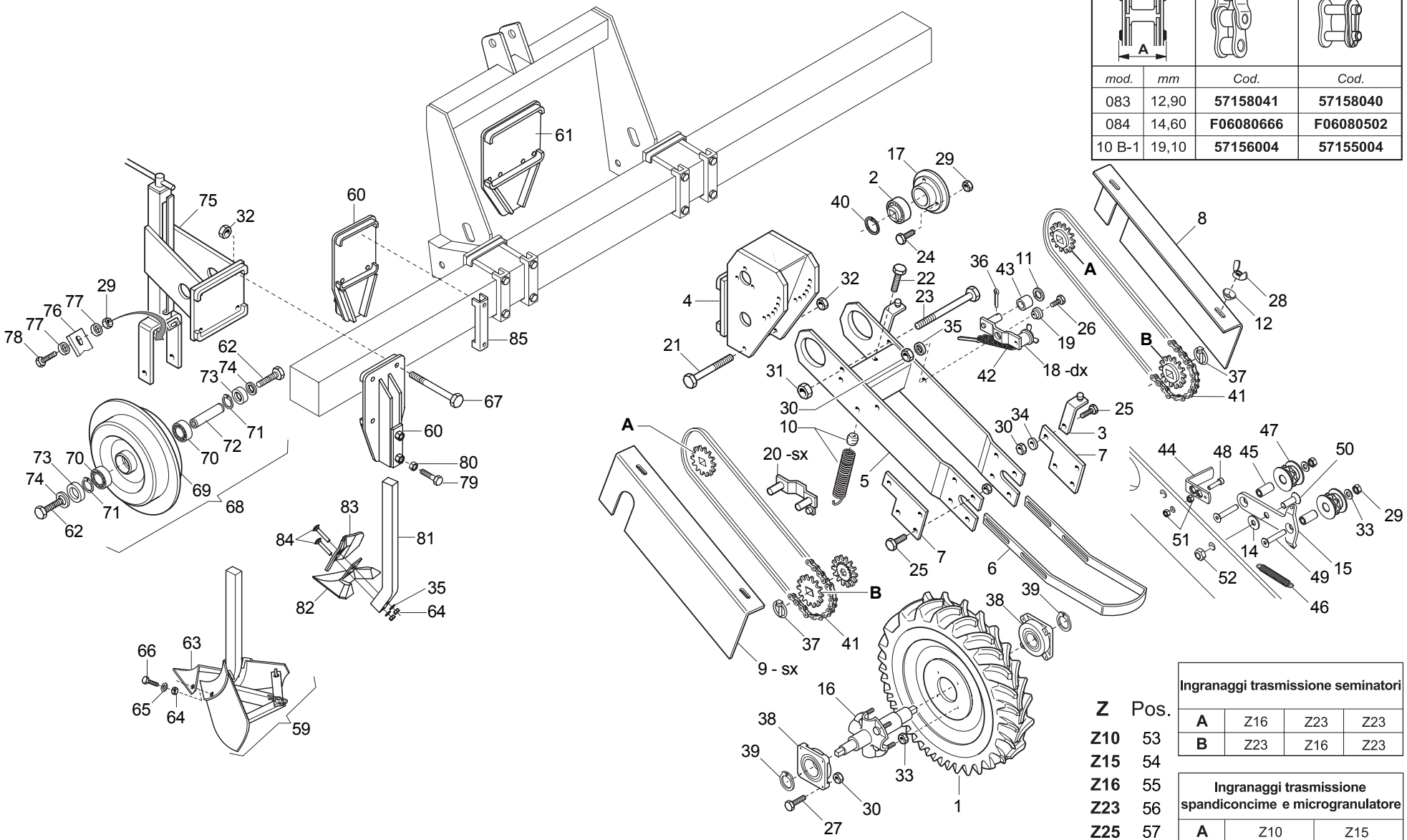


| Catena Chain | | Falsa maglia Offset link | Maglia giunto Connecting link |
|---|---|---|---|
| mod. | mm | Cod. | Cod. |
| 083 | 12,90 | **57158041** | **57158040** |
| 084 | 14,60 | **F06080666** | **F06080502** |
| 10 B-1 | 19,10 | **57156004** | **57155004** |

| Z | Pos. |
|---|---|
| **Z10** | 53 |
| **Z15** | 54 |
| **Z16** | 55 |
| **Z23** | 56 |
| **Z25** | 57 |
| **Z30** | 58 |

| Ingranaggi trasmissione seminatori | | | |
|---|---|---|---|
| **A** | Z16 | Z23 | Z23 |
| **B** | Z23 | Z16 | Z23 |

| Ingranaggi trasmissione spandiconcime e microgranulatore | | |
|---|---|---|
| **A** | Z10 | Z15 |
| **B** | Z30 | Z25 |



GASPARDO

## *SEMINA SU COLMI*

TAV. 66/282

| Pos. | Cod. | Descrizione | Description | Description | Benennung | Descripcion |
|---|---|---|---|---|---|---|
| 56 | 16630410 | PIGNONE Z-23 ZN. | PINION Z-23 ZN. | PIGNON Z-23 ZN. | RITZE Z-23 ZN. | PINION Z-23 ZN. |
| 57 | 16630420 | PIGNONE Z-25 ZN. | PINION Z-25 ZN. | PIGNON Z-25 ZN. | RITZE Z-25 ZN. | PINION Z-25 ZN. |
| 58 | 16630430 | PIGNONE Z-30 ZN. | PINION Z-30 ZN. | PIGNON Z-30 ZN. | RITZE Z-30 ZN. | PINION Z-30 ZN. |
| 59 | 13643080 | RINCALZATORE ALI REGOLABILI | ADJUSTABLE WING RIDGE PLOUGH | BUTTOIR AILETTES REGL. | ABDECKER EINSTELLBARE FLsGEL | RECALZADOR ALETAS REGUL. |
| 60 | 15430842 | SUPPORTO RINCALZATORE LATERALE | RIDGER SUPPORT | SUPPORT HACHOIR | HALTERUNG HZUFLER | SOPORTE RUEDA RECALZADOR |
| 61 | 15431001 | SUPPORTO RINCALZATORE CENTRALE | CENTRAL RIDGER SUPPORT | SUPPORT HACHOIR CENTRAL | HALTERUNG MITTLERER HZUFLER | SOPORTE RECALZADOR CENTRAL |
| 62 | F01020514 | VITE 12X40 5739 8.G ZN | BOLT 12X40 5739 8.G GALVANIZED | VIS 12X40 5739 8.G ZN | SCHRAUBE 12X40 5739 8.G ZN | TORNILLO 12X40 5739 8.G ZN |
| 63 | 23410118 | PUNTA RINCALZATORE | RIDGING PLOUGH TIP | POINTE BUTTOIR | ABDECKERSPITZE | PUNTA RECALZADOR |
| 64 | F01200269 | DADO 10 5588 6.8 | NUT 10 UNI 5588 6.8 | ECROU 10 UNI 5588 6.8 | MUTTER 10 UNI 5588 6.8 | TUERCA 10 UNI 5588 6.8 |
| 65 | F01410064 | RONDELLA D10 UNI 6592 ZN | WASHER D10 UNI 6592 GALVANIZED | RONDELLE D10 UNI 6592 ZN | UNTERLEGSCHEIBE D10 UNI 6592 Z | ARANDELA D10 UNI 6592 ZN |
| 66 | F01060112 | BULLONE 10X30 6104 4.6 * | BOLT 10X30 6104 4.6 | BOULON 10X30 6104 4.6 * | SCHRAUBE 10X30 6104 4.6 * | PERNO 10X30 6104 4.6 * |
| 67 | F01020232 | VITE 14X200 5737 8.G ZN | BOLT 14X200 5737 8.G GALVANIZ. | VIS 14X200 5737 8.G ZN | SCHRAUBE 14X200 5737 8.G ZN | TORNILLO 14X200 5737 8.G ZN |
| 67 | 41601133 | VITE 14 X240 5737 8.G | BOLT M 14 X240 5737 8.G | VIS M 14 X240 5737 8.G | SCHRAUBE M 14 X240 5737 8.G | TORNILLO M 14 X240 5737 8.G |
| 68 | 13610620 | RUOTA COMPLETA 320X100 CRESTA | COMPL. WHEEL 320X100 | ROUE COMPL. 320X100 | RAD KOMPL. 320X100 | RUEDA COMPL. 320X100 |
| 69 | 23440072 | RUOTA CON MOZZO HL | WHEEL- W/ HUB HL | ROUE AVEC MOYEU HL | RAD MIT NABE HL | RUEDA CON PERNO HL |
| 70 | F04010170 | CUSCINETTO 6205 2RS | BEARING 6205 2RS | PALIER 6205 2RS | LAGER 6205 2RS | COJINETE 6205 2RS |
| 71 | F02050613 | ANELLO ARR.25 UNI 7435-75 | STOP RING 25 UNI 7435-75 | BAGUE DE SERRAGE 25 UNI 7435-7 | DRAHTSPRENGRING 25 UNI 7435-75 | ANILLO PARADA 25 UNI 7435-75 |
| 72 | 23430059 | PERNO RUOTA | WHEEL PIN | PIVOT ROUE | RADZAPFEN | PERNO RUEDA |
| 73 | 18705130 | ROND.FOND.12,5 X62 X1,5X11 | BOTTOM WASHER 12.5 X 62 X 1.5 | ROND. FOND. 12-5 X62 X1-5X11 | BODENSCHEIBE 12-5 X62 X1-5X11 | ARANDELA 12-5 X62 X1-5X11 |
| 74 | F01410076 | RONDELLA D12 UNI 6592 ZN | WASHER D12 UNI 6592 ZN | RONDELLE D12 UNI 6592 ZN | UNTERLEGSCHEIBE D12 UNI 6592 Z | ARANDELA D12 UNI 6592 ZN |
| 75 | 15430891 | SUPPORTO RUOTA DI PROFONDITA' | FROF. WHEEL SUPPORT | SUPPORT ROUE FROF. | HALTERUNG TIEFEN RAD | SOPORTE RUEDA FROF |
| 76 | 23440074 | RASCHIATERRA RUOTA STERZ. HL | STEERING WHEEL SOIL-SCRAPER HL | RACLEUR ROUE BRAQUANTE HL | ERDSCHABER LENKRAD HL | RASCADOR TIERRA RUEDA ORIENTAB |
| 77 | F01410051 | RONDELLA D8 UNI 6592 ZN | WASHER D8 UNI 6592 GALVANIZED | RONDELLE D8 UNI 6592 ZN | UNTERLEGSCHEIBE D8 UNI 6592 ZN | ARANDELA D8 UNI 6592 ZN |
| 78 | F01020436 | VITE 8 X20 5739 8.G ZN | BOLT 8X20 5739 8.G GALVANIZED | VIS 8X20 5739 8.G ZN | SCHRAUBE 8X20 5739 8.G ZN | TORNILLO 8X20 5739 8.G ZN |
| 79 | F01020571 | VITE 16X50 5739 8.G ZN | BOLT 16X50 5739 8.G GALVANIZ. | VIS 16X50 5739 8.G ZN | SCHRAUBE 16X50 5739 8.G ZN | TORNILLO 16X50 5739 8.G ZN |
| 80 | F01200444 | DADO 16 5589 6.8 ZN | NUT 16 UNI 5589 6.8 GALVANIZED | ECROU 16 UNI 5589 6.8 ZN | MUTTER 16 UNI 5589 6.8 ZN | TUERCA 16 UNI 5589 6.8 ZN |
| 81 | 23440087 | GAMBO ZAPPA POST. HL | SHANK - REAR HOE HL | TIGE HOUE ARRIERE HL | SCHAFT HINT. MESSER HL | VæSTAGO AZADA TRAS. HL |
| 82 | 23420051 | ZAPPA POSTERIORE DA 215 LM | HOE- REAR- 215 LM | HOUE ARRIERE DE 215 LM | MESSER HINTEN 215 LM | AZADA TRASERA DE 215 LM |
| 83 | 23440084 | VOMERE SUPPLEMENTARE HL LM | PLOUGH-SHARE- SUPPLEM. HL LM | SOC SUPPLEMENTAIRE HL LM | ZUSZTZLICHE SCHAR HL LM | REJA SUPLEMENTARIA HL LM |
| 84 | F01060086 | VITE 10X70 5732 4.6 ZN | BOLT 10X70 5732 4.6 GALVANIZED | VIS 10X70 5732 4.6 ZN | SCHRAUBE 10X70 5732 4.6 ZN | TORNILLO 10X70 5732 4.6 ZN |
| 85 | 15110091 | SCONTRO A U | STRIKER | BRIDE 150 MM | ANSCHLAG | ELEMENTO DE EMPALME |

TAV. 66/220

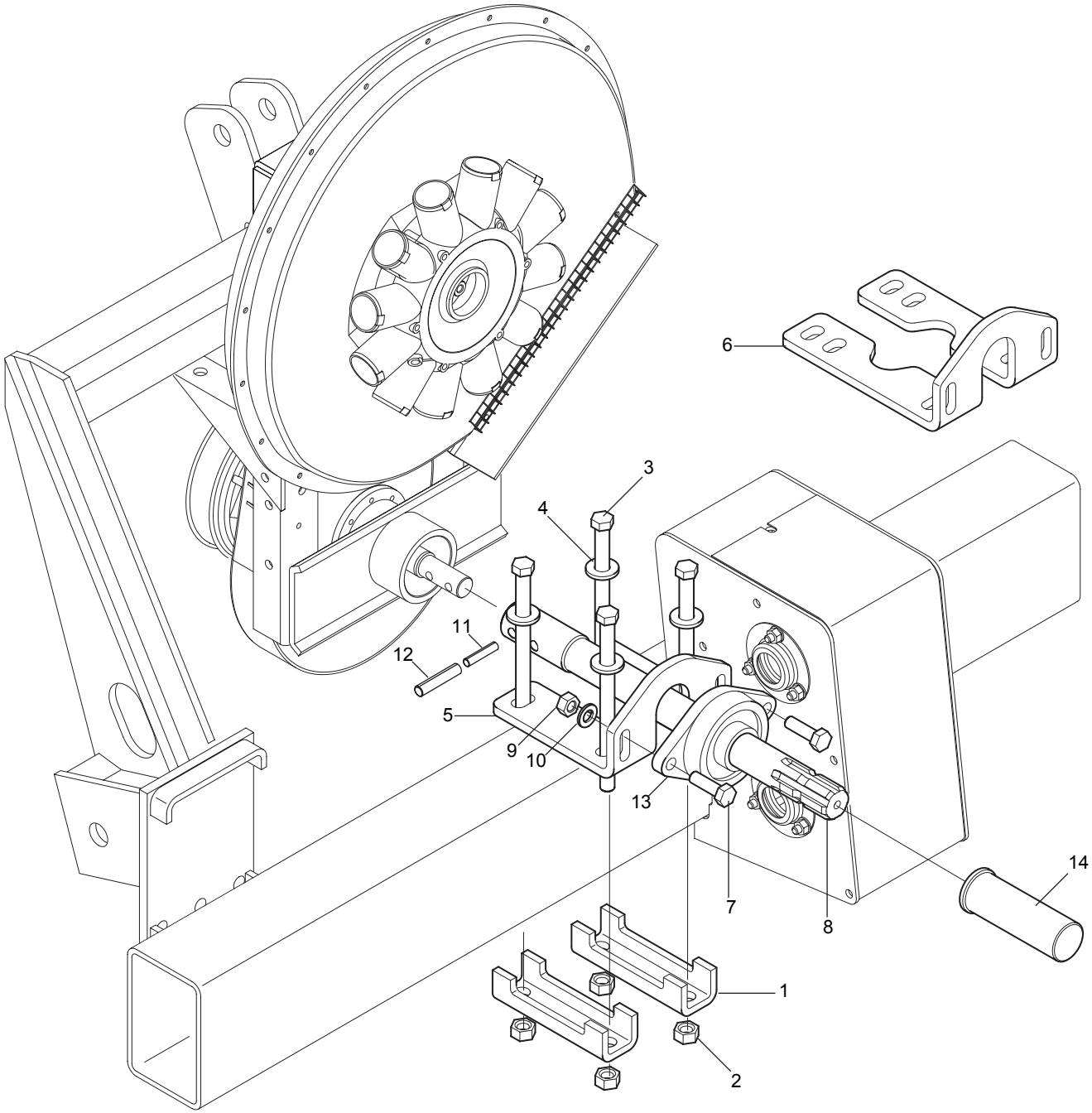




GASPARDO

## *PRESA DI POTENZA POSTERIORE*

TAV. 66/220

| Pos. | Cod. | Descrizione | Description | Description | Benennung | Descripcion |
|---|---|---|---|---|---|---|
| 1 | 13710560 | SCONTRO Q 100 | STRIKER PLATE 'U' 100 | BUTEE 'U' 100 | ANSCHLAG 'U' 100 | ELEMENTO DE EMPALME 'U' 100 |
| 1 | 14255000 | SCONTRO 120 | STRIKER 120 | BUTEE 120 | ANSCHLAG 120 | ELEM. DE EMPALME 120 |
| 1 | 15110091 | SCONTRO A U | STRIKER | BRIDE 150 MM | ANSCHLAG | ELEMENTO DE EMPALME |
| 2 | F01200306 | DADO 14 5588 6.8 ZN | NUT 14 UNI 5588 6.8 GALVANIZED | ECROU 14 UNI 5588 6.8 ZN | MUTTER 14 UNI 5588 6.8 ZN | TUERCA 14 UNI 5588 6.8 ZN |
| 3 | F01020232 | VITE 14X200 5737 8.G ZN | BOLT 14X200 5737 8.G GALVANIZ. | VIS 14X200 5737 8.G ZN | SCHRAUBE 14X200 5737 8.G ZN | TORNILLO 14X200 5737 8.G ZN |
| 3 | 41601125 | VITE 14X180 5737 8.G | SCREW 14X180 5737 8.G | VIS 14X180 5737 8.G | SCHRAUBE 14X180 5737 8.G | TORNILLO 14X180 5737 8.G |
| 4 | F01410088 | RONDELLA D14 UNI 6592 ZN | WASHER D14 UNI 6592 GALVANIZED | RONDELLE D14 UNI 6592 ZN | UNTERLEGSCHEIBE D14 UNI 6592 Z | ARANDELA D14 UNI 6592 ZN |
| 5 | 14850040 | SUPPORTO PDP POST. T.100 | PDP REAR SUPPORT T.100 | SUPPORT ARRIERE PDP T.100 | HINT. HALTERUNG PDP T.100 | SOPORTE TRASERO TDP T.100 |
| 6 | 14850050 | SUPPORTO PRESA DI POTENZA | PTO SUPPORT | SUPPORT PRISE DE FORCE | ZAPFWELLENHALTERUNG | SOPORTE TOMA DE FUERZA |
| 7 | F01020514 | VITE 12X40 5739 8.G ZN | BOLT 12X40 5739 8.G GALVANIZED | VIS 12X40 5739 8.G ZN | SCHRAUBE 12X40 5739 8.G ZN | TORNILLO 12X40 5739 8.G ZN |
| 8 | 14850030 | PRESA DI POTENZA POSTERIORE | REAR POWER TAKE-OFF | PRISE DE FORCE ARRI+RE | HINTERE LEISTUNGSABNAHME | TOMA DE FUERZA TRASERA |
| 9 | F01220244 | DADO TRISTOP M12 | NUT- TRISTOP M12 | ECROU TRISTOP M12 | MUTTER TRISTOP M12 | TUERCA TRISTOP M12 |
| 10 | F01410076 | RONDELLA D12 UNI 6592 ZN | WASHER D12 UNI 6592 ZN | RONDELLE D12 UNI 6592 ZN | UNTERLEGSCHEIBE D12 UNI 6592 Z | ARANDELA D12 UNI 6592 ZN |
| 11 | F02100121 | SPINA EL.6 X40 DIN 1481 | PIN EL. 6 X40 DIN 1481 | FICHE EL. 6 X40 DIN 1481 | SPANNSTIFT 6 X40 DIN 1481 | CLAVIJA EL.6 X40 DIN 1481 |
| 12 | F02100161 | SPINA EL.10 X40 DIN 1481 | PIN EL. 10 X40 DIN 1481 | FICHE EL. 10 X40 DIN 1481 | SPANNSTIFT 10X40 DIN 1481 | CLAVIJA EL.10 X40 DIN 1481 |
| 13 | F04100139 | SUPPORTO FY TB35 TF | SUPPORT FY TB35 TF | SUPPORT FY TB35 TF | HALTERUNG FY TP35 TF | SOPORTE FY TB35 TF |
| 14 | 66248227 | CUFFIA PROTEZIONE P.D.P. | POWER TAKE-OFF PROTECTION HOUS | PROTECTEUR PRISE DE PUISSANCE | SCHUTZKASTEN KRAFTABTRIEB | ENVOLTURA PROTECCIN T. DE P. G |

# TAV. 66/272

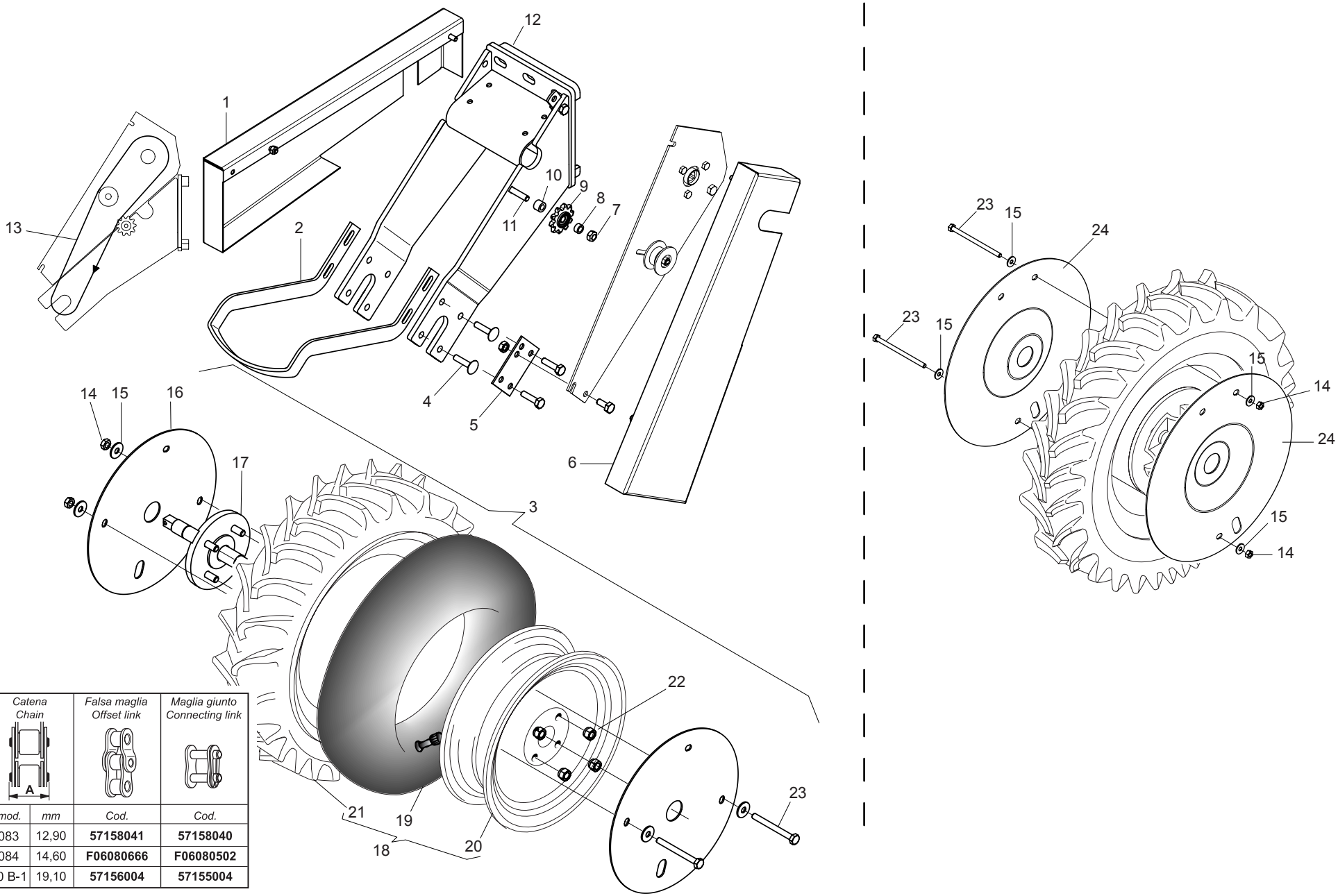


| Catena Chain | | Falsa maglia Offset link | Maglia giunto Connecting link |
|---|---|---|---|
| mod. | mm | Cod. | Cod. |
| 083 | 12,90 | **57158041** | **57158040** |
| 084 | 14,60 | **F06080666** | **F06080502** |
| 10 B-1 | 19,10 | **57156004** | **57155004** |



GASPARDO

## *KIT RUOTE PER TERRENI SASSOSI - FLANGIATURA RUOTE*

TAV. 66/272

| Pos. | Cod. | Descrizione | Description | Description | Benennung | Descripcion |
|---|---|---|---|---|---|---|
| 1 | 16630150 | CARTER SX | LEFT CASE | CARTER GAUCHE | GEHZUSE LI | C-RTER IZQ |
| 2 | 16630170 | RASCHIATERRA RUOTA SASSI | SOIL SCRAPER WHEEL | RACLEUR ROUE | RADSCHABER RAD | RUEDAS RASCADOR DE TIERRA |
| 3 | 16630220 | RUOTA SASSI COMPLETA | WHEEL- STONES ASSY.. | ROUE SOLS GRAVELEUX COMPL. | RAD SASSI KOMPLETT | RUEDA PIEDRAS COMPLETA |
| 4 | F01060077 | VITE 10X45 5732 4.8 ZN | BOLT 10X45 5732 4.8 GALVANIZED | VIS 10X45 5732 4.8 ZN | SCHRAUBE 10X45 5732 4.8 ZN | TORNILLO 10X45 5732 4.8 ZN |
| 5 | 16630160 | SUPP.RASCHIATERRA SASSI | MUD SCRAPER SUPPORT | SUPP. RACLE-BOUE | SCHLAMMSCHABERHAL-TERUNG | SOPORTE RASCADOR DE LODO |
| 6 | 16630140 | CARTER DX. | RH CASING | CARTER DRT. | GEHZUSE RECHTS | C-RTER DER |
| 7 | F01220233 | DADO TRISTOP M10 | NUT TRISTOP M10 | ECROU TRISTOP M10 | MUTTER TRISTOP M10 | TUERCA TRISTOP M10 |
| 8 | 20980076 | BOCCOLA 16X7X10,25 | BUSHING 16X7X10-25 | BOITE 16X7X10-25 | BsCHSE 16X7X10-25 | CASQUILLO 16X7X10-25 |
| 9 | 16630190 | INGRANAGGIO Z.10-TENDIC.COMPL | GEAR Z-10 - BELT TIGHTENER | ENGRENAGE Z-10 - TENDEUR DE CO | ZAHNRAD Z-10 - RIEMENSPANNER | ENGRANAJE Z-10 - TENSOR DE COR |
| 10 | 18800320 | BOCCOLA 10,25X18X13 | BUSHING 10,50X18X31 | BOITE 10,50X18X31 | B_CHSE 10,50X18X31 | CASQUILLO 10,50X18X31 |
| 11 | F01060079 | VITE 10X50 5732 4.6 | SCREW 10X50 5732 4.6 | VIS 10X50 5732 4.6 | SCHRAUBE 10X50 5732 4.6 | TORNILLO 10X50 5732 4.6 |
| 12 | 16630110 | SUPPORTO RUOTA SASSI | WHEEL SUPPORT | SUPPORT ROUE | RADLAGER | SOPORTE RUEDA |
| 13 | F06080238 | AN.CAT.ISO 10B-1 78 MAGLIE | ISO 10B-1 CHAIN LINK - 78-LINK | MAILLE CHAINE ISO 10B-1 78 MAI | KETTENRING ISO 10B-1 78 GLIEDE | ESLABN CADENA ISO 10B-1 78 ESL |
| 14 | F01220222 | DADO TRISTOP M 8 | NUT- TRISTOP M 8 | ECROU TRISTOP M 8 | MUTTER TRISTOP M 8 | TUERCA TRISTOP M 8 |
| 15 | F01420048 | ROND.PIANA 9X 24X2 6593 ZN | FLAT WASHER 9X 24X2 6593 GALV. | ROND. PLATE 9X 24X2 6593 ZN | SCHEIBE 9X 24X2 6593 ZN | ARAND. PLANA 9X 24X2 6593 ZN |
| 16 | 16630210 | DISCO PROTEZIONE SASSI | DISK STONE PROTECTION | DISQUE PROTECTION SOLS GRAVELE | STEINSCHUTZ-SCHEIBE | DISCO PROTECIËN PIEDRAS |
| 17 | 22270281 | ASSE RUOTA TRASM.MAGG. SP/S | INCREASED DRIVE WHEEL AXLE | AXE ROUE ENTRAINEMENT 6.50-15 | RADACHSE sBERBEM. ANTRIEB SP/S | EJE RUEDA TRANS. SOBREDIMENS. |
| 18 | 16630200 | RUOTA 6,50/80-12 TS-06 4PR | WHEEL 6,50/80-12 TS-06 4PR | ROUE 6,50/80-12 TS-06 4PR | RAD 6,50/80-12 TS-06 4PR | RUEDA 6,50/80-12 TS-06 4PR |
| 19 | 56244018 | CAMERA D'ARIA FR 12 6,50/80-12 | CHAMBER 12 6,50/80-12 | CHAMBRE 12 6,50/80-12 | KAMMER 12 6,50/80-12 | CAMARA 12 6,50/80-12 |
| 20 | F06120193 | CERCHIO 300 B X 12 | RING 300 B X 12 | JANTE 300 B X 12 | REIFEN 300 B X 12 | LLANTA 300 B X 12 |
| 21 | F06120179 | COPERTURA 6.5/80-12 TS-06 4PR | COVERING 6.5/80-12 TS-06 4PR | COUVERTURE 6.5/80-12 TS-06 4PR | MANTEL 6.5/80-12 TS-06 4PR | CUBIERTA 6.5/80-12 TS-06 4PR |
| 22 | F01250040 | DADO 12X1.5 COLONNETTA | COLUMN NUT M12X1.5 STUD BOLT | ECROU M12X1. 5 COLONNE | SCHRAUBBOLZENMUTTER M12X1.5 | TUERCA 12X1.5 COLUMNA |
| 23 | F01020090 | VITE 8 X100 5737 8.G ZN | BOLT 8 X100 5737 8.G GALVANIZ. | VIS 8 X100 5737 8.G ZN | SCHRAUBE 8 X100 5737 8.G ZN | TORNILLO 8 X100 5737 8.G ZN |
| 23 | F01020097 | VITE 8 X150 5737 8.G ZN | BOLT 8 X150 5737 8.G GALVANIZ. | VIS 8 X150 5737 8.G ZN | SCHRAUBE 8 X150 5737 8.G ZN | TORNILLO 8 X150 5737 8.G ZN |
| 24 | 14830221 | DISCO PROTEZIONE SASSI | DISK STONE PROTECTION | DISQUE PROTECTION SOLS GRAVELE | STEINSCHUTZ-SCHEIBE | DISCO PROTECIËN PIEDRAS |

TAV. 66/242

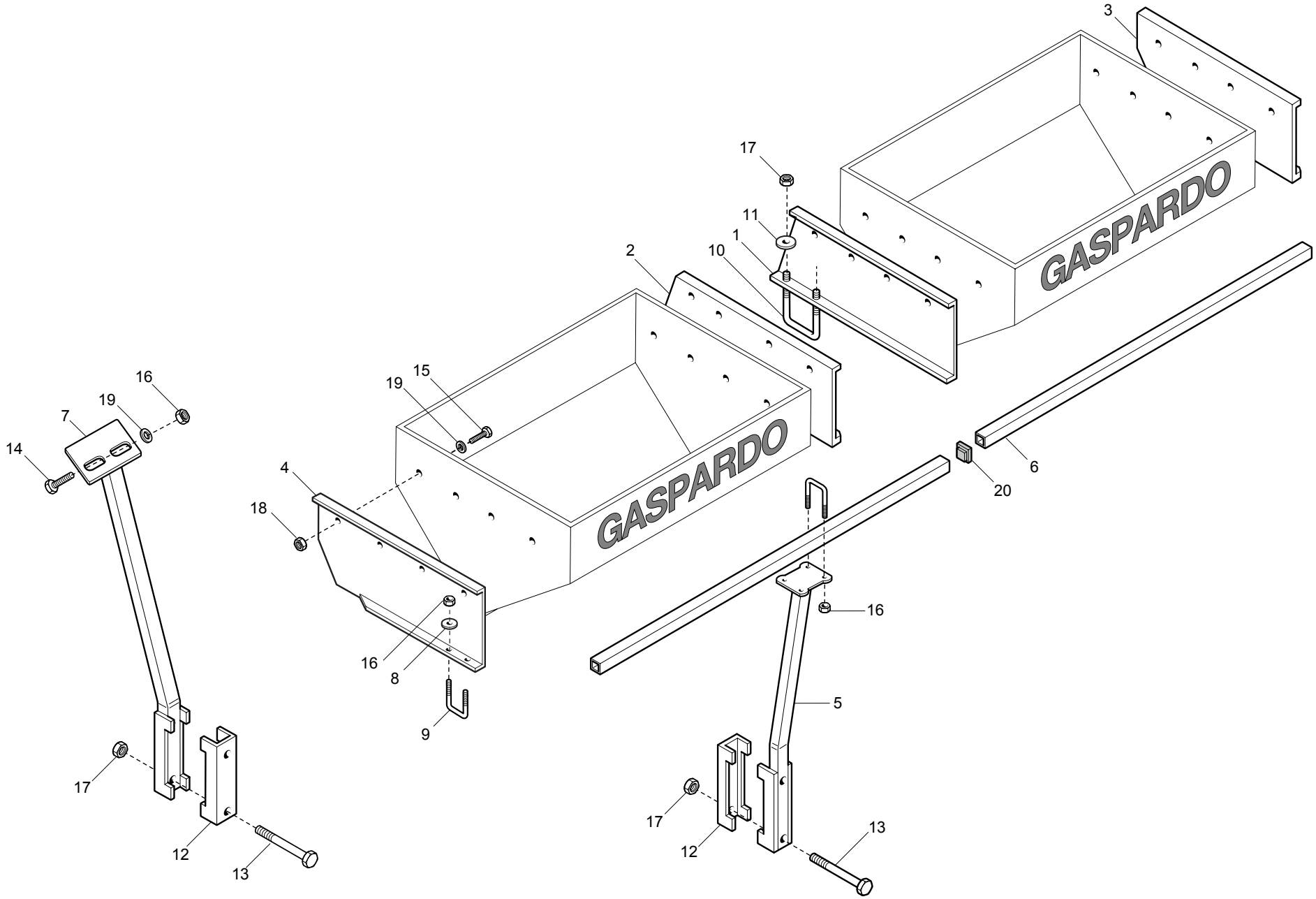
3
17
11
1
10
2
GASPARDO
GASPARDO
16
19
7
14
15
19
4
18
6
20
16
16
8
9
5
17
12
13
17
12
13

## *SUPPORTI SERBATOI SPANDICONCIME FERRO*

TAV. 66/242

| Pos. | Cod. | Descrizione | Description | Description | Benennung | Descripcion |
|---|---|---|---|---|---|---|
| 1 | 15470631 | SUPPORTO SPANDI CENTRALE DX | RH CENTRAL FERT.SPREADER SUPP. | SUPPORT EPANDEUR CENTR.DRT. | HALTER. MITTL.DsNGERSTR. RE | SOPORTE ABONAD. CENTRAL DER. |
| 2 | 15470641 | SUPPORTO SPANDI CENTRALE SX | LH CENTRAL FERT.SPREADER SUPP. | SUPPORT EPANDEUR CENTR.GCH. | HALTER. MITTL.DsNGERSTR. LI | SOPORTE ABONAD. CENTRAL IZQ. |
| 3 | 15171380 | SUPPORTO ESTERNO SPANDI DX | MAN.SPR. EXT. RIGHT SUPPORT | SUPPORT EXT. DRT. EP. ENGRAIS | RECHTE ZUSSERE HALTER.DsNGERST | SOPORTE EXT.DER. ABONADORA . |
| 4 | 15171390 | SUPPORTO ESTERNO SPANDI SX | MAN.SPR.EXT.LEFT SUPPORT | SUPPORT EXT. GCH. EP. ENGRAIS | LINKER ZUSSERE HALTER.DsNGERST | SOPORTE EXTERIOR IZQ.ABONADORA |
| 5 | 16670011 | SUPPORTO SPANDI | SPREADER SUPPORT | SUPPORT +PANDEUR | HALTERUNG SPANDI | SOPORTE ABONADORA |
| 5 | 15472901 | SUPPORTO SPANDI Q.150 | SQ. FERTILIZER SPREADER SUPPOR | SUPPORT +PANDEUR CARR+ 150 | HALTERUNG SPANDI Q.150 | SOPORTE ABONADORA Q.150 |
| 6 | 15472970 | TUBO Q.35 X4 X1200 | SQUARE PIPE 35 X4 X1200 | TUBE CARRE 35 X4 X1200 | VIERKANTROHR 35 X4 X1200 | TUBO CUADRADO 35 X4 X1200 |
| 7 | 15473051 | SUPPORTO SERBATOIO ANT. | FRONT HOPPER SUPPORT | SUPPORT TR+MIE AVANT | HALTERUNG VORDERER BEH-LTER | SOPORTE DEPËSITO ANT. |
| 8 | 18701140 | RONDELLA 11 X35 X5 | WASHER 11 X 35 X 5 | RONDELLE 11 X35 X5 | UNTERLEGSCHEIBE 11 X35 X5 | ARANDELA 11 X35 X5 |
| 9 | 22250272 | CAVALLOTTO SUPP.DISCO SV | DISK SUPPORT.ELEMENT U BOLT SV | CAVALIER SUPPORT DISQUE SV | VERBINDUNG SCHEIBENHALTERUNG S | PERNO EN U SOP. DISCO SV |
| 10 | 15111050 | CAVALLOTTO M14X96 - 119 ZN | U-BOLT M14X96 - 119 ZN | CAVALIER M14X96 - 119 ZN | VERBINDUNG M14X96 - 119 ZN | PERNO EN U M14X96 - 119 ZN |
| 11 | 18700690 | RONDELLA 15 X40 X6 ZN | WASHER 15 X 40 X 6 ZN | RONDELLE 15 X40 X6 ZN | UNTERLEGSCHEIBE 15 X40 X6 ZN | ARANDELA 15 X40 X6 ZN |
| 12 | 15110091 | SCONTRO A U | STRIKER | BRIDE 150 MM | ANSCHLAG | ELEMENTO DE EMPALME |
| 13 | 41601133 | VITE 14 X240 5737 8.G | BOLT M 14 X240 5737 8.G | VIS M 14 X240 5737 8.G | SCHRAUBE M 14 X240 5737 8.G | TORNILLO M 14 X240 5737 8.G |
| 14 | F01020463 | VITE 10X25 5739 INOX A2 | SCREW 10X25 5739 INOX A2 | VIS 10X25 5739 INOX A2 | SCHRAUBE 10X25 5739 INOX A2 | TORNILLO 10X25 5739 INOX A2 |
| 15 | F01020465 | VITE 10X35 5739 INOX A2 | SCREW 10X35 5739 INOX A2 | VIS 10X35 5739 INOX A2 | SCHRAUBE 10X35 5739 INOX A2 | TORNILLO 10X35 5739 INOX A2 |
| 16 | F01200271 | DADO 10 5588 6.8 INOX | NUT 10 5588 6.8 INOX | ECROU 10 5588 6.8 INOX | MUTTER 10 5588 6.8 INOX | TUERCA 10 5588 6.8 INOX |
| 17 | F01200306 | DADO 14 5588 6.8 ZN | NUT 14 UNI 5588 6.8 GALVANIZED | ECROU 14 UNI 5588 6.8 ZN | MUTTER 14 UNI 5588 6.8 ZN | TUERCA 14 UNI 5588 6.8 ZN |
| 18 | F01200271 | DADO 10 5588 6.8 INOX | NUT 10 5588 6.8 INOX | ECROU 10 5588 6.8 INOX | MUTTER 10 5588 6.8 INOX | TUERCA 10 5588 6.8 INOX |
| 19 | F01420059 | RONDELLA 11X30X2,5 6593 A2 | WASHER 11X30X2,5 6593 A2 | RONDELLE 11X30X2,5 6593 A2 | UNTERLEGSCHEIBE 11X30X2,5 6593 | ARANDELA 11X30X2,5 6593 A2 |
| 20 | 15475560 | TAPPO TUBO 35X35 | PLUG PIPE 35X35 | BOUCHON TUBE 35X35 | ROHRPFROPFEN 35X35 | TAP N TUBO 35X35 |

# TAV. 66/251

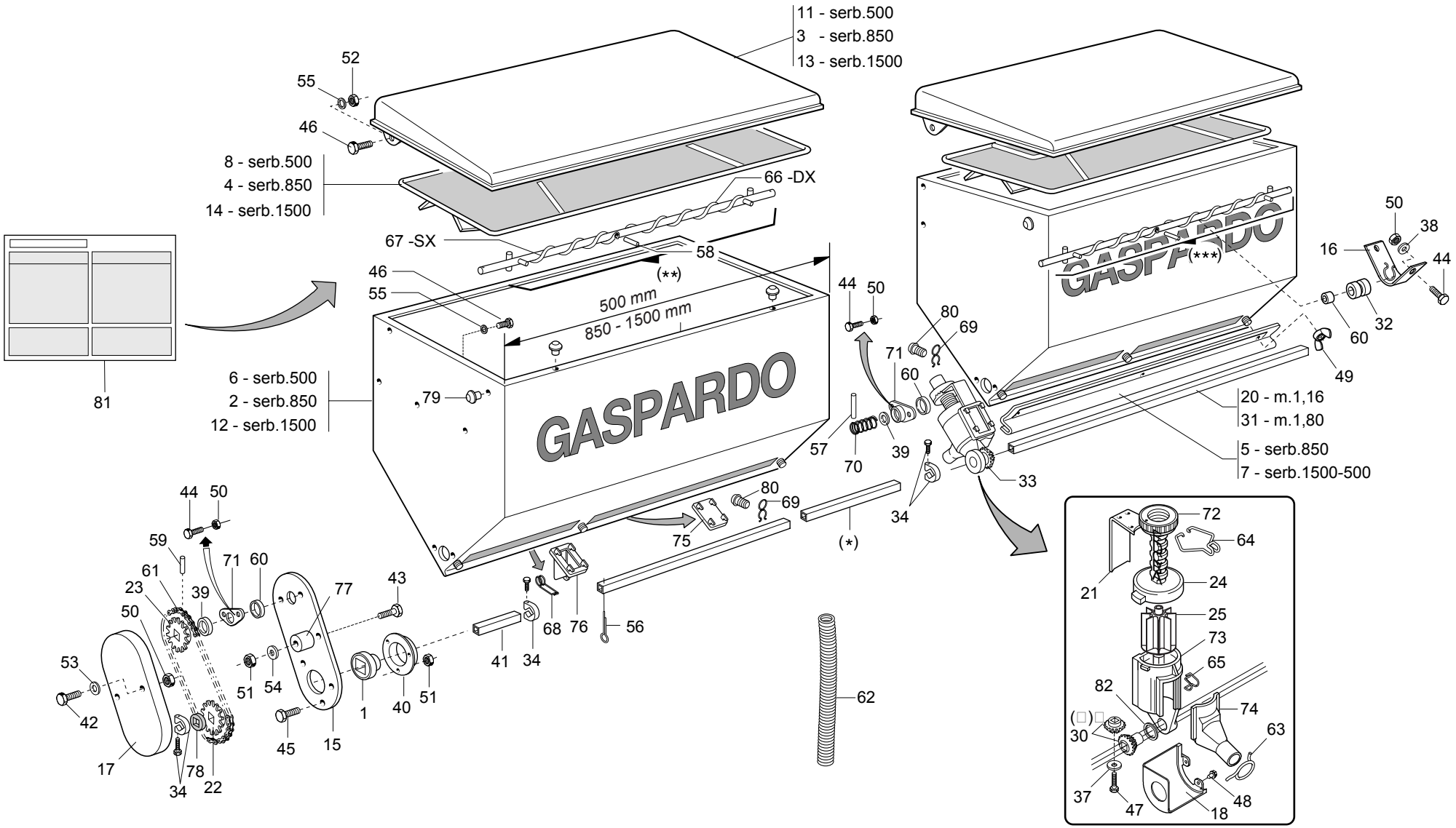


**(□) Kit ingranaggi cod. 20860126 (2+2 pezzi)**

| | | | | | |
|---|---|---|---|---|---|
| * | 19 - 20860012 - m 0,50 | ** | 10 - 15471130 - SX/ serb.500 | *** | 9 - 15471120 - DX/ serb.500 |
| | 36 - 20910045 - m 1,18 | | 27 - 20860122 - SX/ serb.850 | | 26 - 20860121 - DX/ serb.850 |
| | 35 - 20910044 - m 1,375 | | 29 - 20860124 - SX/ serb.1500 | | 28 - 20860123 - DX/ serb.1500 |

## *SERBATOI SPANDICONCIME FERRO*

TAV. 66/251

| Pos. | Cod. | Descrizione | Description | Description | Benennung | Descripcion |
|---|---|---|---|---|---|---|
| 1 | 14830390 | CUSCINETTO FORO QUADRO | SQUARE-HOLED BEARING | ROULEMENT AL+SAGE CARR+ | VIERKANTLAGER | COJINETE ORIFICIO CUADRADO |
| 2 | 15470500 | SERBATOIO CONCIME 850 | MANURE TANK 850 | RESERVOIR ENGRAIS 850 | DsNGERBEHZLTER 850 | DEPSITO ABONO 850 B |
| 3 | 15470580 | COPERCHIO SERBATOIO 850 | TANK TOP 850 | COUVERCLE RESERVOIR 650 | BEHZLTERDECKEL 850 | TAPA DEPSITO 850 A |
| 4 | 15470700 | GRIGLIA 850 | GRID 850 | GRILLE 850 | GITTER 850 | REJILLA 850 |
| 5 | 15470780 | PORTA DI PULIZIA SERB.850 | TANK 850 CLEANING DOOR | PORTE DE NETTOYAGE RESERVOIR 8 | REINIGUNGSTsR BEHZLTER 850 | PUERTA DE LIMPIEZA DEPS. 850 P |
| 6 | 15471010 | SERBATOIO CONCIME 500 | FERTILIZER TANK 500 | RESERVOIR ENGRAIS 500 | DsNGERBEHZLTER 500 | DEPSITO ABONO 500 B |
| 7 | 15471040 | PORTA DI PULIZIA | CLEANING DOOR | PORTE DE NETTOYAGE | REINIGUNGSTsR | PUERTA LIMPIEZA |
| 8 | 15471090 | GRIGLIA 500 | GRID 500 | GRILLE 500 | GITTER 500 | REJILLA 500 |
| 9 | 15471120 | ASSE AGITAT.DX SERBATOIO 500 | RIGHT TANK STIRRER SPINDLE 500 | AXE AGIT. DRT RESERVOIR 500 | ACHSE SAMENMISCHER RE BEHZLTER | EJE AGITADOR DER DEPSITO 500 A |
| 10 | 15471130 | ASSE AGITAT. SX SERBATOIO 500 | LEFT TANK STIRRER SPINDLE 500 | AXE AGIT. GCH RESERVOIR 500 | ACHSE SAMENMISCHER LI BEHZLTER | EJE AGITADOR IZQ DEPSITO 500 A |
| 11 | 15471140 | COPERCHIO SERBATOIO 500 | TANK COVER 500 | COUVERCLE RESERVOIR 500 | BEHZLTERDECKEL 500 | TAPA DEPSITO 500 A |
| 12 | 15471280 | SERBATOIO CONCIME 1500 | FERTILIZER TANK 1500 | RESERVOIR ENGRAIS 1500 | DsNGERBEHZLTER 1500 | DEPSITO ABONO 1500 B |
| 13 | 15471320 | COPERCHIO SERBATOIO 1500 | TANK COVER 1500 | COUVERCLE RESERVOIR 1500 | BEHZLTERDECKEL 1500 | TAPA DEPSITO 1500 A |
| 14 | 15471390 | GRIGLIA 1500 | GRID 1500 | GRILLE 1500 | GITTER 1500 | REJILLA 1500 |
| 15 | 15471930 | PROTEZIONE | GUARD | PROTECTION | SCHUTZ | PROTECCIN P |
| 16 | 15471990 | SUPPORTO COCLEA | SCREW SUPPORT | SUPPORT VIS ALIMENTATION | HALTERUNG SCHNECKE | SOPORTE CCLEA S |
| 17 | 19002710 | PROTEZ.RINVIO SPANDICONCIME | FERTILIZER TRANSM. PROTECTION | PROTECTION RENVOI FERTILISEUR | SCHUTZ VORGELEGE DUNGERSTREUER | PROTECCION TRANSMISION ABONADO |
| 18 | 19002850 | PROTEZIONE PIGNONE | PINION GUARD | PROTECTION PIGNON | RITZELSCHUTZ | PROTECCIN PI¾N PR |
| 19 | 20860012 | MANICOTTO DI UNIONE L.500 | JOINT SLEEVE L.500 | MANCHON DE RACCORD L. 500 | VERBINDUNGSMUFFE L.500 | MANGUITO DE UNIN L.500 M |
| 20 | 20860008 | ASSE LATO CAMBIO 2 F. L.1160 | GEARBOX SIDE SPINDLE- 2-ROW L. | AXE COTE BOITE DE VITESSE | ACHSE GETRIEBESEITE 2 R. L. 11 | EJE LADO CAMBIO 2 FIL. L.1 |
| 21 | 20860052 | REGOLATORE APERTURA | OPENING REGULATOR | REGULATEUR OUVERTURE | TFFNUNGSEINSTELLER | REGULADOR ABERTURA |
| 22 | 20860086 | INGRANAGGIO 1/2 Z-12 F.Q. | GEAR 1/2 Z-12 F.Q. | ENGRENAGE 1/2 Z-12 TROUS CARRE | ZAHNRAD 1/2 Z-12 F.Q. | ENGRANAJE 1/2 Z-12 F.Q. |
| 23 | 20860088 | INGRANAGGIO 1/2 Z-12 F.T. | GEAR 1/2 Z-12 F.T. | ENGRENAGE 1/2 Z-12 TROUS RONDS | ZAHNRAD 1/2 Z-12 F.T. | ENGRANAJE 1/2 Z-12 F.T. |
| 24 | 20860093 | VITE DI REGOL. | ADJUSTMENT BOLT | VIS DE REGLAGE | EINSTELLSCHRAUBE. | TORNILLO DE REGULACIN S |
| 25 | 20860106 | DOSATORE SPANDI 8 PALE COMPL. | FERT.METERING DEVICE ASS.8 GRO | ROTOR DOSEUR 8C FERTI | DOSIERER DUNGER.KOMPL. 8 SEKT | DOSIFICADOR ABONO COMP.8 SECT |
| 26 | 20860121 | ASSE AGITAT.DX SERB.850 COMPL. | STIRRER SPINDLE- RIGHT 850 TAN | AXE AGITATEUR DRT. RESERVOIR 8 | SAMENMISCHERACHSE RE BEH.850 | EJE AGITAD. DER. DEPS.850 COMA |
| 27 | 20860122 | ASSE AGITAT.SX SERB.850 COMPL. | STIRRER SPINDLE- LEFT 850 TANK | AXE AGITATEUR GCH. RESERVOIR 8 | SAMENMISCHERACHSE LI BEH.850 | EJE AGITAD. IZQ. DEPS. 850 COA |
| 28 | 20860123 | AGIT.DX SERB.1500 3-4 USC.COMP | RIGHT 1500 TANK STIRRER- 3-4 O | AGITATEUR DRT. RESERVOIR 1500 | SAMENMI. RE BEH.1500 3-4AUSG. | AGIT. DER. DEPS. 1500 3-4 SALA |
| 29 | 20860124 | AGIT.SX SERB.1500 3-4 USC.COMP | LEFT 1500 TANK STIRRER- 3-4 OU | AGITATEUR GCH. RESERVOIR 1500 | SAMENMI. LI BEH.1500 3-4 AUSG. | AGIT. IZQ. DEPS. 1500 3-4 SALA |
| 30 | 20860126 | KIT INGR DISTR CONCIME (2+2) | KIT- MAN. DISTR. GEARS | COUPLE CON DISTR ENGRAIS (2+2) | KIT ZAHNRZDER DsNGERSTREUER | SET ENGRANAJES DISTRIB. ABONO |
| 31 | 20870028 | ASSE SERB.LATO TRAS.6F.L.1800 | AXLE- GEARBOX SIDE- 6-ROW L.18 | AXE RESERVOIR COTE ENTRAINEMEN | ACHSE BEHZLTER ANTRIEBSS. 6F.L | EJE DEPS. LADO TRANS. 6 FILA A |
| 32 | 19005040 | BOCCOLA ASSE SPANDI | FERT. SPREADER AXLE BUSH | DOUILLE AXE +PANDEUR | ACHSENBUCHSE STREUER | MANGUITO -RBOL ABONADORA |
| 33 | 20880044 | DISTR.COMPL.8PALE SPANDI FE | COMPL.IRON FERTIL.DISTR.8 RIBS | MINIMAX COMPL 8C FER | KOMPL.DOSIER.MET.DÜNGERSTR.8S | DISTR.COMP.ABONO HIER.8ALETAS |
| 34 | 22505085 | FERMO ASSE IN LAMIERA | PLATE AXLE STOP | ARRET AXE EN TOLE | FESTSTELLVORRICHTUNG BLECHACHS | BLOQUEO EJE DE CHAPA |
| 35 | 20910044 | MANICOTTO UNIONE L.1375 | JOINT SLEEVE L.1375 | MANCHON RACCORD L. 1375 | VERBINDUNGSMUFFE L.1375 | MANGUITO DE UNIN L.1375 M |
| 36 | 20910045 | MANICOTTO UNIONE L.1180 | JOINT SLEEVE L.1180 | MANCHON RACCORD L. 1180 | VERBINDUNGSMUFFE L.1180 | MANGUITO DE UNIN L.1180 M |
| 37 | 20970097 | RONDELLA 32X3X4,5 | WASHER 32X3X4-5 | RONDELLE 32X3X4-5 | UNTERLEGSCHEIBE 32X3X4-5 | ARANDELA 32X3X4-5 |
| 38 | 20970125 | RONDELLA 28X2,5X6,5 | WASHER 28X2-5X6-5 | RONDELLE 28X2-5X6-5 | UNTERLEGSCHEIBE 28X2-5X6-5 | ARANDELA 28X2-5X6-5 |
| 39 | 22220073 | RONDELLA 28X0,3X16,5 | WASHER 28X0-3X16-5 | RONDELLE 28X0-3X16-5 | UNTERLEGSCHEIBE 28X0-3X16-5 | ARANDELA 28X0-3X16-5 |
| 40 | 22230094 | SUPPORTO CUSCINETTO | BEARING SUPPORT | SUPPORT PALIER | LAGERBsCHSE | SOPORTE COJINETE |
| 41 | 22250287 | MANICOTTO DISTANZIALE SV | SPACER SLEEVE SV | MANCHON ENTRETOISE SV | ABSTANDSMUFFE SV | MANGUITO DISTANCIADOR SV |
| 42 | F01020043 | VITE 6 X60 5737 8.G ZN | BOLT 6 X60 5737 8.G GALVANIZED | VIS 6 X60 5737 8.G ZN | SCHRAUBE 6 X60 5737 8.G ZN | TORNILLO 6 X60 5737 8.G ZN |
| 43 | F01020068 | VITE 8 X40 5737 8.G ZN | BOLT 8 X40 5737 8.G GALVANIZED | VIS 8 X40 5737 8.G ZN | SCHRAUBE 8 X40 5737 8.G ZN | TORNILLO 8 X40 5737 8.G ZN |
| 44 | F01020419 | VITE M6 X1 X 16 U5739 8.8 IX | BOLT M6 X1 X 16 U5739 8.8 IX | VIS M6 X1 X 16 U5739 8.8 IX | SCHRAUBE M6 X1 X 16 U5739 8. | TORNIL. M6 X1 X 16 U5739 8.8 |
| 45 | F01020432 | VITE 8 X16 5739 8.G ZN | BOLT 8X16 5739 8.G GALVANIZED | VIS 8X16 5739 8.G ZN | SCHRAUBE 8X16 5739 8.G ZN | TORNILLO 8X16 5739 8.G ZN |
| 46 | F01020463 | VITE 10X25 5739 INOX A2 | SCREW 10X25 5739 INOX A2 | VIS 10X25 5739 INOX A2 | SCHRAUBE 10X25 5739 INOX A2 | TORNILLO 10X25 5739 INOX A2 |
| 47 | F01070075 | VITE 4,2X38 DIN 7981 | BOLT 4-2X38 DIN 7981 | VIS 4-2X38 DIN 7981 | SCHRAUBE 4-2X38 DIN 7981 | TORNILLO 4-2X38 DIN 7981 |
| 48 | F01070011 | VITE AUTOF.4,2X9,5T.E.TAG.F.RO | BOLT- SELF-TAPPING 4-2X9-5T.E. | VIS AUTOTAR. 4-2X9-5 T. E. COU | SELBSTSCHNEID. SCHRAUBE 4-2X9- | TORNILLO AUTORROSC. 4-2X9-5 |
| 49 | F01240012 | DADO 6 5448 5.8 ZN | NUT 6 UNI 5448 5.8 ZN | ECROU 6 UNI 5448 5.8 ZN | MUTTER 6 UNI 5448 5.8 ZN | TUERCA 6 UNI 5448 5.8 ZN |
| 50 | F01200233 | DADO M 6X 1 U5588 IX | NUT M 6X 1 U5588 IX | ECROU M 6X 1 U5588 I | MUTTER M 6X 1 U5588 | TUERCA M 6X 1 U5588 |
| 51 | F01200244 | DADO 8 5588 6.8 ZN | NUT 8 UNI 5588 6.8 GALVANIZED | ECROU 8 UNI 5588 6.8 ZN | MUTTER 8 UNI 5588 6.8 ZN | TUERCA 8 UNI 5588 6.8 ZN |
| 52 | F01200271 | DADO 10 5588 6.8 INOX | NUT 10 5588 6.8 INOX | ECROU 10 5588 6.8 INOX | MUTTER 10 5588 6.8 INOX | TUERCA 10 5588 6.8 INOX |
| 53 | F01410037 | RONDELLA D6 UNI 6592 ZN | WASHER D6 UNI 6592 GALVANIZED | RONDELLE D6 UNI 6592 ZN | UNTERLEGSCHEIBE D6 UNI 6592 ZN | ARANDELA D6 UNI 6592 ZN |
| 54 | F01410051 | RONDELLA D8 UNI 6592 ZN | WASHER D8 UNI 6592 GALVANIZED | RONDELLE D8 UNI 6592 ZN | UNTERLEGSCHEIBE D8 UNI 6592 ZN | ARANDELA D8 UNI 6592 ZN |
| 55 | F01420059 | RONDELLA 11X30X2,5 6593 A2 | WASHER 11X30X2,5 6593 A2 | RONDELLE 11X30X2,5 6593 A2 | UNTERLEGSCHEIBE 11X30X2,5 6593 | ARANDELA 11X30X2,5 6593 A2 |

# TAV. 66/251

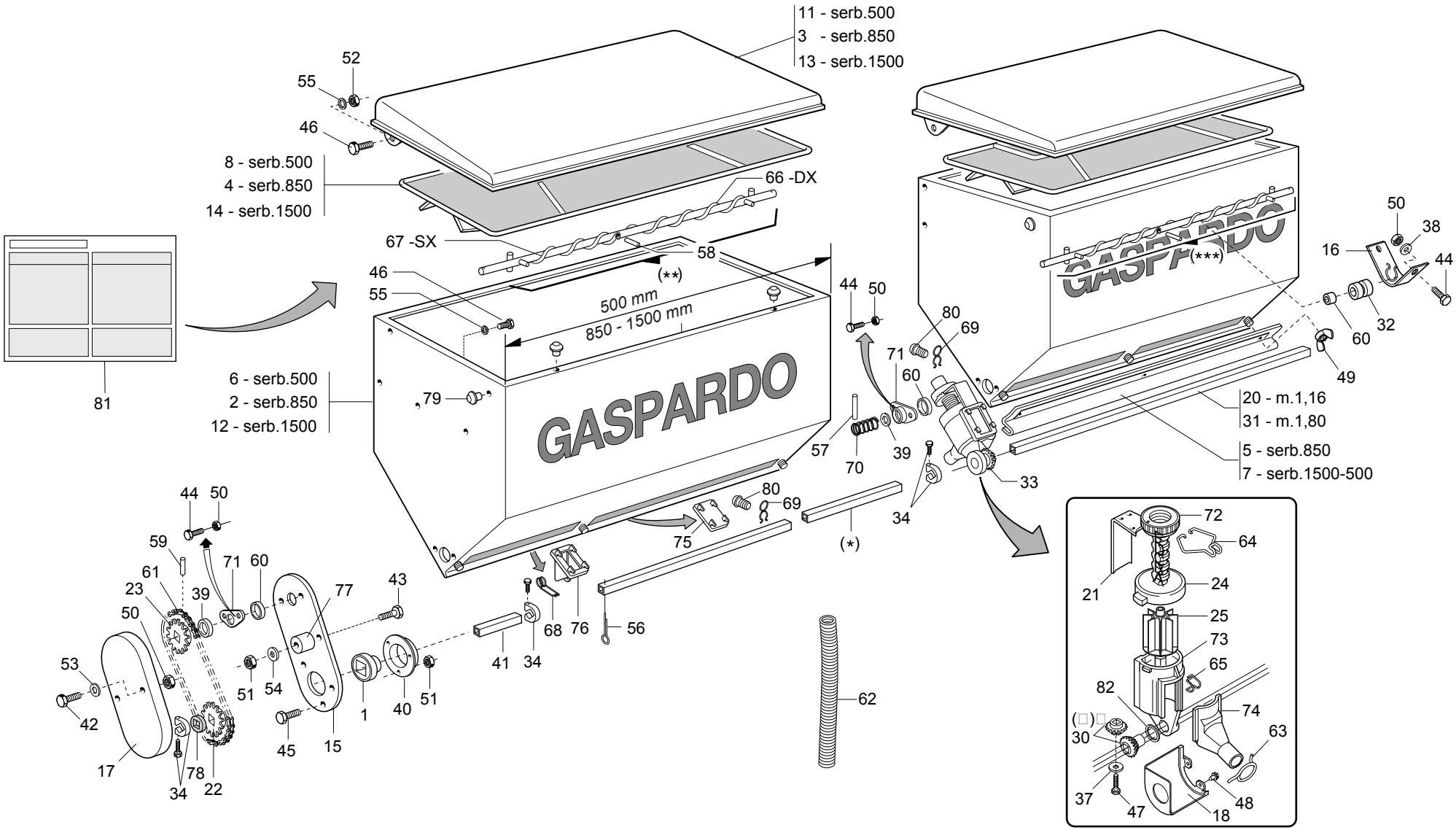


**(□) Kit ingranaggi cod. 20860126 (2+2 pezzi)**

| | | | | | |
|---|---|---|---|---|---|
| * | 19 - 20860012 - m 0,50 | ** | 10 - 15471130 - SX/ serb.500 | *** | 9 - 15471120 - DX/ serb.500 |
| | 36 - 20910045 - m 1,18 | | 27 - 20860122 - SX/ serb.850 | | 26 - 20860121 - DX/ serb.850 |
| | 35 - 20910044 - m 1,375 | | 29 - 20860124 - SX/ serb.1500 | | 28 - 20860123 - DX/ serb.1500 |

## *SERBATOI SPANDICONCIME FERRO*

TAV. 66/251

| Pos. | Cod. | Descrizione | Description | Description | Benennung | Descripcion |
|---|---|---|---|---|---|---|
| 56 | F02200227 | COPIGLIA 5 X30 1336 ZN | SPLIT PIN 5 X30 1336 GALVAN. | GOUPILLE 5 X30 1336 ZN | SPLINT 5 X30 1336 ZN | PASADOR 5 X30 1336 ZN |
| 57 | F02100079 | SPINA EL.5 X20 DIN 1481 | PIN EL. .5 X20 DIN 1481 | FICHE EL. 5 X20 DIN 1481 | SPANNSTIFT 5X20 DIN 1481 | CLAVIJA EL.5 X20 DIN 1481 |
| 58 | F02100089 | SPINA EL.5 X36 DIN 1481 | PIN EL. 5 X36 DIN 1481 | FICHE EL. 5 X36 DIN 1481 | SPANNSTIFT 5 X36 DIN 1481 | CLAVIJA EL.5 X36 DIN 1481 |
| 59 | F02100114 | SPINA EL.6 X30 DIN 1481 | PIN EL. 6 X30 DIN 1481 | FICHE EL. 6 X30 DIN 1481 | SPANNSTIFT 6 X30 DIN 1481 | CLAVIJA EL.6 X30 DIN 1481 |
| 60 | F03011081 | GUARNIZIONI LABBRO DE100 | LIP GASKET DE100 | GARNITURES LEVRE DE100 | LIPPENDICHTUNG DE100 | GUA DELANTERA G |
| 61 | F06080196 | SPEZ.CAT.1/2 ISO 083 32MA.TR. | CUT-DOWN CHAIN .1/2 ISO 083 32 | TRONCON CHAINE 1/2 ISO 083 32 | KETTENLZNGE 1/2 ISO 083 32 GL | TRECHO CADENA 1/2 ISO 083 32 |
| 62 | F03100500 | TUBO EOLO 35 PU | EOLO PIPE 35 PU | TUBE EOLO 35 PU | ROHR EOLO 35 PU | TUBO EOLO 35 PU |
| 63 | 65336025 | MOLLA SPEC.ZN STRINGIT.ASP.SP | SPEC SPRING ZN FAN . PIPE CLAM | RESSORT SPEC. ZN SERRE-TUBE AS | SPEZIALFEDER ZN RORHSCHELLE AB | MUELLE ESPEC. ZN APRIETA TUBOS |
| 64 | 65336055 | MOLLA SPEC.REGOL.SPAND. SP | SPEC SPRING MAN. SPR. ADJUSTM. | RESSORT SPEC. REGL. EP. ENTRAI | SPEZIALFEDER STREUEREINSTELLUN | MUELLE ESPEC. REGUL. ABONADORA |
| 65 | 65336062 | MOLLA SPEC.SCIV.DISTR.SPAND.SP | SPEC SPRING - MAN. SPR. DISTR. | RESS. SPEC. LANCOIR DISTR. EP. | SPEZ.FEDER RUTSCHE SZAPP. STRE | MUELLE ESPEC.PLANO INCL.DISTR. |
| 66 | 65336064 | MOLLA SPEC.COCLEA DX SPAND.HL | SPEC. WORM SCREW SPRING RIGHT | RESSORT SPEC. VIS DRT. EP. ENG | SPEZ.FEDER RE SCHNECKE STREUER | MUELLE ESPEC. TORN.S/F DER. AB |
| 67 | 65336065 | MOLLA SPEC.COCLEA SX SPAND.HL | SPEC. WORM SCREW SPRING LEFT M | RESSORT SPEC. VIS GCH. EP. ENG | SPEZ.FEDER LI SCHNECKE STREUER | MUELLE ESPEC. TORN.S/F IZQ. AB |
| 68 | 65336080 | MOLLA SPEC.SCARICO SPAND.T.M. | SPEC.SPRING- MAN. SPR. DISCHAR | RESSORT SPEC. DECHARGEMENT FER | SPEZIALFEDER STREUERENTLADUNG | MUELLE ESPEC. DESCARGA ABONAD. |
| 69 | 65336089 | MOLLA SPEC.TENUTA FERMO SPAND. | SPEC.SPRING- BLOCK. MAN. SPR. | RESSORT SPEC. D'ETANCHEITE ARR | SPEZIALFEDER DICHTUNG STREUER | MUELLE ESPEC. RETENC. BLOQ |
| 70 | 65338043 | MOLLA COMP.ZN SERB. M80 | ZN TANK COMP.SPRING M80 | RESSORT COMPL. ZN RESERVOIR M8 | DRUCKFEDER ZN BEHZLTER M80 | MUELLE COMP.ZN DEPS. M80 A |
| 71 | 66248121 | BOCCOLA CON FLANGIA M80 | BUSHING W/ FLANGE M80 | SUPPORT AVEC BRIDE M80 | BsCHSE MIT FLANSCH M80 | CASQUILLO CON BRIDA M80 |
| 72 | 66248125 | GHIERA REGOLAZIONE M80 | ADJUSTMENT KNURLED NUT M80 | BAGUE REGLAGE M80 | EINSTELLMUTTER M80 | CONTRATUERCA REGULACIN M80 G |
| 73 | 66248176 | CORPO DISTR.SPAND. SP | MANURE SPREADER DISTR. CASING | CORPS DISTRIB. EP. ENGRAIS SP | VERTEILUNGSKTRPER STREUER SP | CUERPO DISTR. ABON. SP |
| 74 | 66248178 | SCIVOLO DISTR.SPAND. SP | CHUTE- MANURE-SPREADER DISTRIB | LANCOIR DISTRIBUTION EP. ENGR. | DsNGERSTREUER RUTSCHE SP | PLANO INCLINADO DISTR. ABON. S |
| 75 | 66248184 | CHIUSURA USCITA SERB.SPAND.SP | OUTLET CLOSURE- MAN.SPREAD. TA | FERMETURE SORTIE RESERVOIR FER | VERSCHLUSS AUSTRITT DsNGERSTR. | CIERRE SALIDA DEPS. ABON. SP I |
| 76 | 66248187 | SCARICO SERB.SPAND.TIPO MICRO | MICRO TYPE MAN.SPR.TANK DISCH. | TRAPPE DE VIDANGE TYPE MICRO | BEHZLTERENTLADUNG STREUER TYP | DESCARGA DEPS. ABON.TIPO MICRD |
| 77 | 66248207 | TENDICATENA SPAND. SP-520 | CHAIN TENSIONER | TENDEUR DE CHAINE EPAND. ENGR. | KETTENSPANNER DsNGERSTR. SP-52 | TENSOR DE CADENA ABON. SP-520 |
| 78 | 66248218 | RONDELLA DISTAN.SPAND. | MAN. SPR. SPACER WASHER | RONDELLE ENTRETOISE EP. ENGRAI | ABSTANDSCHEIBE DsNGERSTREUER | ARANDELA DISTAN.ABONAD. |
| 79 | 66248223 | TAPPO SUPP.SPAND.D.11 | PLUG MAN. SPR. SUPP. D.11 | BOUCHON SUPPORT EP. ENGRAIS D. | HALTERUNGSPFROPFEN DsNGERSTR. | TAPN SOPORTE ABON.D.11 D |
| 80 | 66248224 | FERMO DISTRIBUTORE SPAND. | FERT. SPR. DISTRIB. STOP | ARRET DISTRIBUTEUR EP. ENGRAIS | FESTSTELLVORRICHTUNG SZAPP. ST | BLOQUEO DISTRIBUIDOR ABON. |
| 81 | 19700821 | TABELLA CONCIME SP540 | FERTILIZER CHART STICKER | DECALC. TABLEAU DE ENGRAIS | ABZIEHB. TABELLE D_NGER | CAL.TABLA ABONO |
| 82 | 18701500 | RONDELLA 29,5 X38 X0,3 | WASHER 29,5 X 38 X 0,3 | RONDELLE 29,5 X38 X0,3 | UNTERLEGSCHEIBE 29,5X38X0,3 | ARANDELA 29,5 X38 X0,3 |

TAV. 66/141

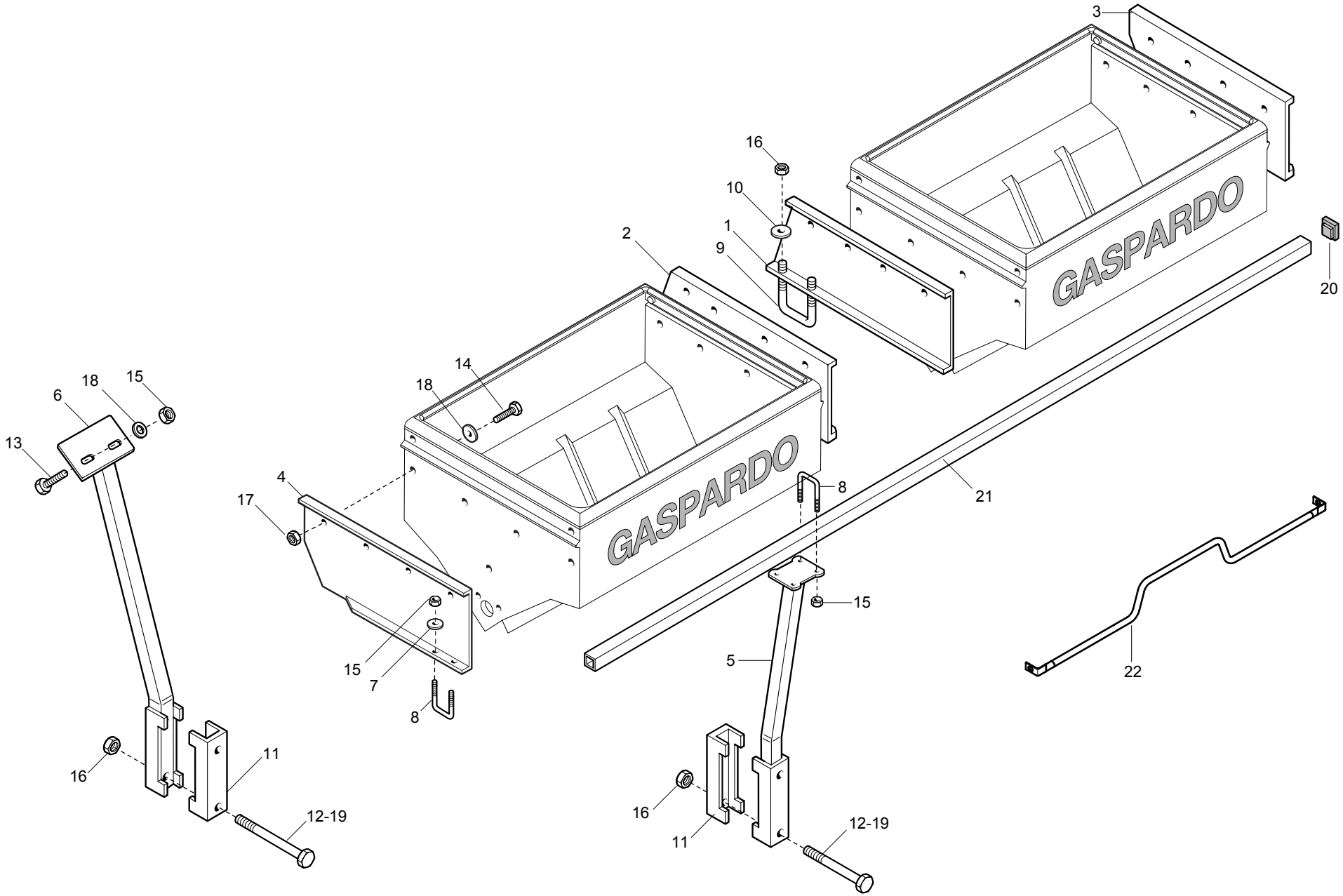
3
16
10
1
9
2
20
14
18
18
15
6
13
4
17
8
21
15
15
7
8
5
22
16
11
12-19
16
11
12-19

## *SUPPORTI SERBATOI SPANDICONCIME PLASTICA*

TAV. 66/141

| Pos. | Cod. | Descrizione | Description | Description | Benennung | Descripcion |
|---|---|---|---|---|---|---|
| 1 | 15470631 | SUPPORTO SPANDI CENTRALE DX | RH CENTRAL FERT.SPREADER SUPP. | SUPPORT EPANDEUR CENTR.DRT. | HALTER. MITTL.DsNGERSTR. RE | SOPORTE ABONAD. CENTRAL DER. |
| 2 | 15470641 | SUPPORTO SPANDI CENTRALE SX | LH CENTRAL FERT.SPREADER SUPP. | SUPPORT EPANDEUR CENTR.GCH. | HALTER. MITTL.DsNGERSTR. LI | SOPORTE ABONAD. CENTRAL IZQ. |
| 3 | 15171380 | SUPPORTO ESTERNO SPANDI DX | MAN.SPR. EXT. RIGHT SUPPORT | SUPPORT EXT. DRT. EP. ENGRAIS | RECHTE ZUSSERE HALTER.DsNGERST | SOPORTE EXT.DER. ABONADORA . |
| 4 | 15171390 | SUPPORTO ESTERNO SPANDI SX | MAN.SPR.EXT.LEFT SUPPORT | SUPPORT EXT. GCH. EP. ENGRAIS | LINKER ZUSSERE HALTER.DsNGERST | SOPORTE EXTERIOR IZQ.ABONADORA |
| 5 | 16670011 | SUPPORTO SPANDI | SPREADER SUPPORT | SUPPORT +PANDEUR | HALTERUNG SPANDI | SOPORTE ABONADORA |
| 5 | 15472901 | SUPPORTO SPANDI Q.150 | SQ. FERTILIZER SPREADER SUPPOR | SUPPORT +PANDEUR CARR+ 150 | HALTERUNG SPANDI Q.150 | SOPORTE ABONADORA Q.150 |
| 6 | 15473251 | SUPPORTO ANT.SPANDI | FRONT FERTILIZER SPREADER SUPP | SUPPORT AVANT +PANDEUR | VORD.HALTERUNG SPANDI | SOPORTE ANT.ABONADORA |
| 7 | 18701140 | RONDELLA 11 X35 X5 | WASHER 11 X 35 X 5 | RONDELLE 11 X35 X5 | UNTERLEGSCHEIBE 11 X35 X5 | ARANDELA 11 X35 X5 |
| 8 | 22250272 | CAVALLOTTO SUPP.DISCO SV | DISK SUPPORT.ELEMENT U BOLT SV | CAVALIER SUPPORT DISQUE SV | VERBINDUNG SCHEIBENHALTERUNG S | PERNO EN U SOP. DISCO SV |
| 9 | 15111050 | CAVALLOTTO M14X96 - 119 ZN | U-BOLT M14X96 - 119 ZN | CAVALIER M14X96 - 119 ZN | VERBINDUNG M14X96 - 119 ZN | PERNO EN U M14X96 - 119 ZN |
| 10 | 18700690 | RONDELLA 15 X40 X6 ZN | WASHER 15 X 40 X 6 ZN | RONDELLE 15 X40 X6 ZN | UNTERLEGSCHEIBE 15 X40 X6 ZN | ARANDELA 15 X40 X6 ZN |
| 11 | 18700690 | RONDELLA 15 X40 X6 ZN | WASHER 15 X 40 X 6 ZN | RONDELLE 15 X40 X6 ZN | UNTERLEGSCHEIBE 15 X40 X6 ZN | ARANDELA 15 X40 X6 ZN |
| 12 | 41601101 | VITE 14 X160 5737 8.G | BOLT M 14 X160 5737 8.G | VIS M 14 X160 5737 8.G | SCHRAUBE M 14 X160 5737 8.G | TORNILLO M 14 X160 5737 8.G |
| 13 | F01020463 | VITE 10X25 5739 INOX A2 | SCREW 10X25 5739 INOX A2 | VIS 10X25 5739 INOX A2 | SCHRAUBE 10X25 5739 INOX A2 | TORNILLO 10X25 5739 INOX A2 |
| 14 | F01020465 | VITE 10X35 5739 INOX A2 | SCREW 10X35 5739 INOX A2 | VIS 10X35 5739 INOX A2 | SCHRAUBE 10X35 5739 INOX A2 | TORNILLO 10X35 5739 INOX A2 |
| 15 | F01200271 | DADO 10 5588 6.8 INOX | NUT 10 5588 6.8 INOX | ECROU 10 5588 6.8 INOX | MUTTER 10 5588 6.8 INOX | TUERCA 10 5588 6.8 INOX |
| 16 | F01200306 | DADO 14 5588 6.8 ZN | NUT 14 UNI 5588 6.8 GALVANIZED | ECROU 14 UNI 5588 6.8 ZN | MUTTER 14 UNI 5588 6.8 ZN | TUERCA 14 UNI 5588 6.8 ZN |
| 17 | F01200271 | DADO 10 5588 6.8 INOX | NUT 10 5588 6.8 INOX | ECROU 10 5588 6.8 INOX | MUTTER 10 5588 6.8 INOX | TUERCA 10 5588 6.8 INOX |
| 18 | F01420059 | RONDELLA 11X30X2,5 6593 A2 | WASHER 11X30X2,5 6593 A2 | RONDELLE 11X30X2,5 6593 A2 | UNTERLEGSCHEIBE 11X30X2,5 6593 | ARANDELA 11X30X2,5 6593 A2 |
| 19 | 41602124 | VITE 14X220 5737 8.G ZN | BOLT 14X220 5737 8.G GALVANIZ. | VIS 14X220 5737 8.G ZN | SCHRAUBE 14X220 5737 8.G ZN | TORNILLO 14X220 5737 8.G ZN |
| 20 | 15475560 | TAPPO TUBO 35X35 | PLUG PIPE 35X35 | BOUCHON TUBE 35X35 | ROHRPFROPFEN 35X35 | TAP N TUBO 35X35 |
| 21 | 07000028 | TUBO Q.35 X4 X2980 | SQUARE PIPE 35 X 35 X 3 X 2980 | TUBE CARRE 35 X 35 X 3 X 2980 | VIERKANTROHR 35 X 35 X 3 X 298 | TUBO CUADRADO 35 X 35 X 3 X 29 |
| 21 | 07000370 | TUBO Q.35 X3 X3980 | SQUARE PIPE 35X35X4X3980 | TUBE CARRE 35X35X4X3980 | VIERKANTROHR 35X35X4X3980 | TUBO CUADRADO 35X35X4X3980 |
| 21 | 07000375 | TUBO Q.35 X3 X1600 | SQUARE PIPE 35X35X4X1600 | TUBE CARRE 35X35X4X1600 | VIERKANTROHR 35X35X4X1600 | TUBO CUADRADO 35X35X4X1600 |
| 21 | 15472970 | TUBO Q.35 X4 X1200 | SQUARE PIPE 35 X4 X1200 | TUBE CARRE 35 X4 X1200 | VIERKANTROHR 35 X4 X1200 | TUBO CUADRADO 35 X4 X1200 |
| 21 | 15472980 | TUBO Q.35 X4 X750 | SQUARE PIPE 35 X4 X750 | TUBE CARRE 35 X4 X750 | VIERKANTROHR 35 X4 X750 | TUBO CUADRADO 35 X4 X750 |
| 21 | 15472990 | TUBO Q.35 X4 X600 | SQUARE PIPE 35 X4 X600 | TUBE CARRE 35 X4 X600 | VIERKANTROHR 35 X4 X600 | TUBO CUADRADO 35 X4 X600 |
| 21 | 15475130 | TUBO SUPPORTO SERBATOIO L.2480 | TANK SUPPORT PIPE L.2480 | TUBE SUPPORT RESERVOIR L2460 | ROHR HALTERUNG BEHZLTER L.2480 | TUBO SOPORTE DEPSITO L 2480 T |
| 21 | 15475300 | TUBO SUPPORTO MICRO L.1170 | MICRO SUPPORT PIPE L.1170 | TUBE SUPPORT MICRO L1170 | ROHR HALTERUNG MIKRO L.1170 | TUBO SOPORTE MICRO L1170 |
| 21 | 15475390 | TUBO SUPPORTO MICRO L.3100 | MICRO SUPPORT PIPE L.3100 | TUBE SUPPORT MICRO L3100 | ROHR HALTERUNG MIKRO L.3100 | TUBO SOPORTE MICRO L.3100 |
| 21 | 15475400 | TUBO SUPPORTO MICRO L.5800 | MICRO SUPPORT PIPE L.3800 | TUBE SUPPORT MICRO L5800 | ROHR HALTERUNG MIKRO L.5800 | TUBO SOPORTE MICRO L.5800 |
| 21 | 15475540 | TUBO SUPPORTO MICRO L.5100 | MICRO SUPPORT PIPE L.5100 | TUBE SUPPORT MICRO L5100 | ROHR HALTERUNG MIKRO L.5100 | TUBO SOPORTE MICRO L 51000 |
| 21 | 20890207 | BARRA DIFFUSORI DISERBO L.1400 | WEEDKILLER SPREADER BAR L.1400 | BARRE DIFFUSEURS DESHERBAGE L. | DIFFUSORENSTANGE UNKRAUTVERT. | BARRA DIFUSORES HERBICIDA L.1 |
| 21 | 22220141 | BRACCIO SCORREVOLE 4 FILE | SLIDING ARM- 4-ROW | BRAS GLISSANT 4 RANGEES | GLEITARM 4 REIHEN | BRAZO CORREDIZO 4 FILAS |
| 21 | 22270115 | BRACC.SCORR.6F.100 L.2000 SP | SLIDING ARM 6-R. 100 L.2000 SP | BRAS GLISS. 6 RANG. 100 L. 200 | GLEITARM 6R.100 L.2000 SP | BRAZO CORRED. 6 FILAS. 100 L.2 |
| 22 | 15272961 | RINFORZO SPANDICONCIME 1100 | FERTILIZER 1100 REINFORCEMENT | RENFORT EPANDEUR D'ENGRAIS 110 | VERSTZRKUNG DsNGERSTREUER 1100 | REFUERZO ABONADORA 1100 |
| 22 | 15273180 | RINFORZO SPANDICONCIME 850 | FERTILIZER 850 REINFORCEMENT | RENFORT EPANDEUR D'ENGRAIS 850 | VERSTZRKUNG DsNGERSTREUER 850 | REFUERZO ABONADORA 850 |

TAV. 66/152

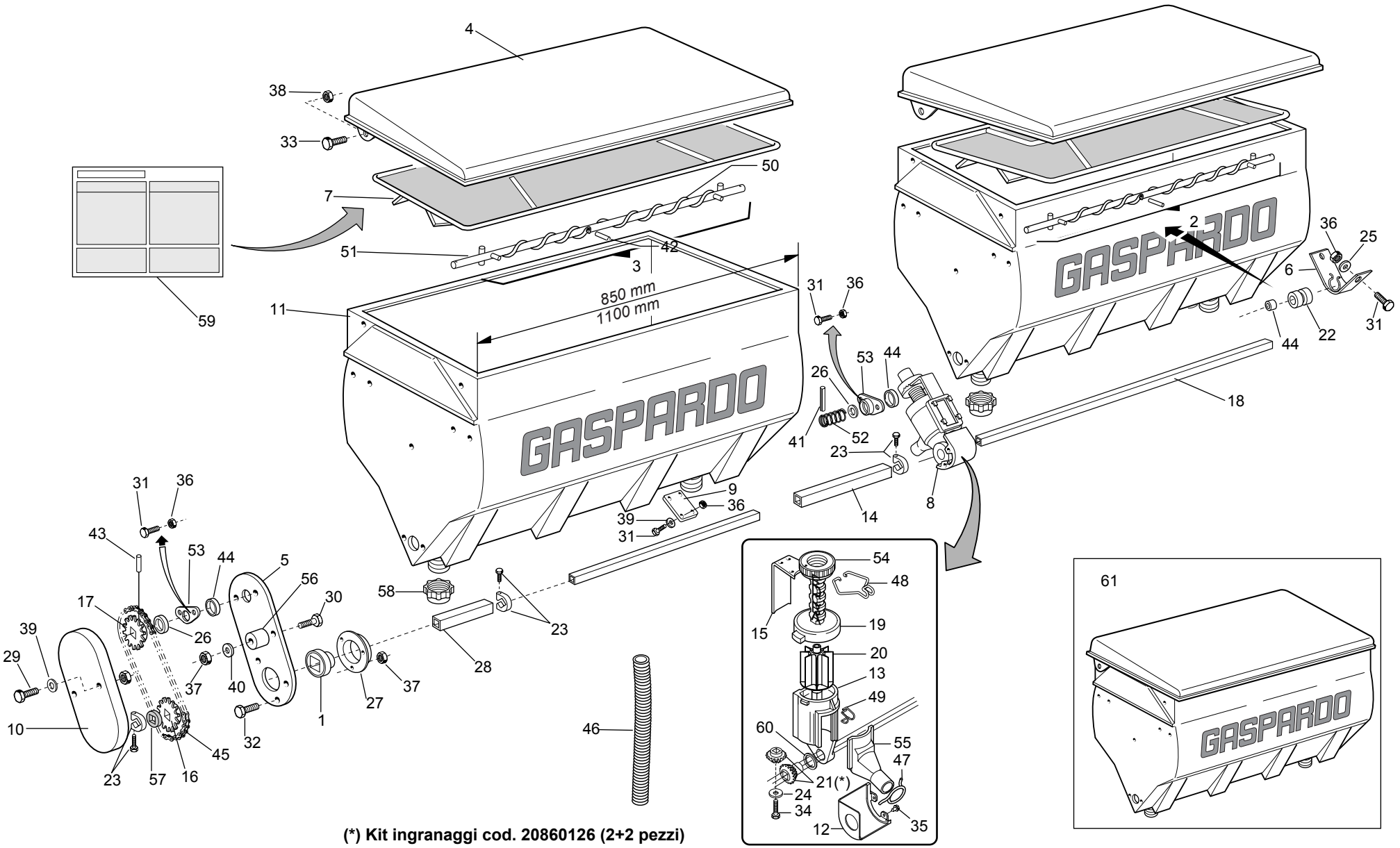


**(*) Kit ingranaggi cod. 20860126 (2+2 pezzi)**

## *SERBATOI SPANDICONCIME PLASTICA*

TAV. 66/152

| Pos. | Cod. | Descrizione | Description | Description | Benennung | Descripcion |
|---|---|---|---|---|---|---|
| 1 | 14830390 | CUSCINETTO FORO QUADRO | SQUARE-HOLED BEARING | ROULEMENT AL+SAGE CARR+ | VIERKANTLAGER | COJINETE ORIFICIO CUADRADO |
| 2 | 15271540 | ASSE AGITATORE DX 1100 | STIRRER SPINDLE-RIGHT 1100 TAN | AXE AGITATEUR DRT.RESERV.1100 | SAMENMISCHERACHSE RE BEH.1100 | EJE AGITAD.DER.DEPS.1100 COM A |
| 2 | 20860121 | ASSE AGITAT.DX SERB.850 COMPL. | STIRRER SPINDLE- RIGHT 850 TAN | AXE AGITATEUR DRT. RESERVOIR 8 | SAMENMISCHERACHSE RE BEH.850 | EJE AGITAD. DER. DEPS.850 COMA |
| 3 | 15271550 | ASSE AGITATORE SX 1100 | STIRRER SPINDLE- LEFT 1100 | AXE AGITATEUR GCH. 1100 | SAMENMISCHERACHSE LINKER 1100 | EJE AGITAD. IZQ. 1100 |
| 3 | 20860122 | ASSE AGITAT.SX SERB.850 COMPL. | STIRRER SPINDLE- LEFT 850 TANK | AXE AGITATEUR GCH. RESERVOIR 8 | SAMENMISCHERACHSE LI BEH.850 | EJE AGITAD. IZQ. DEPS. 850 COA |
| 4 | 15470580 | COPERCHIO SERBATOIO 850 | TANK TOP 850 | COUVERCLE RESERVOIR 650 | BEHZLTERDECKEL 850 | TAPA DEPSITO 850 A |
| 4 | 15471920 | COPERCHIO SERBATOIO L.1100 | TANK COVER L.1100 | COUVERCLE RESERVOIR L.1100 | BEHZLTERDECKEL L.1100 | TAPA DEPS.L.1100 A |
| 5 | 15471930 | PROTEZIONE | GUARD | PROTECTION | SCHUTZ | PROTECCIN P |
| 6 | 15471990 | SUPPORTO COCLEA | SCREW SUPPORT | SUPPORT VIS ALIMENTATION | HALTERUNG SCHNECKE | SOPORTE CCLEA S |
| 7 | 15472760 | GRIGLIA SERBATOIO PLASTICA 850 | PLASTIC TANK GRID 850 | GRILLE RESERVOIR PLASTIQUE 850 | BEHZLTERGITTER PLAST.850 | REJILLA DEPSITO PLAST.850 G |
| 7 | 15473130 | GRIGLIA SERBATOIO 1100 PLAST. | PLASTIC TANK GRID 1100 | GRILLE RESERVOIR PLAST.1100 | BEHZLTERGITTER PLAST.1100 | REJILLA DEPSITO PLAST.1100 G |
| 8 | 15472770 | DISTR.COMPL.8PALE SPANDI PL | COMPL.PLAS.FERTIL.DISTR.8RIBS | MINIMAX COMPL 8C PLA | KOMPL.DOSIER.PLA.DÜNGERSTR.8S | DISTR.COMP.ABONO PLAST. 8AL. |
| 9 | 15472780 | TAPPO SPANDI PLASTICA | PLASTIC FERT. SPREADER PLUG | BOUCHON EPAND. PLASTIQUE | PLASTIKPFROPFEN DsNGERSTR. | TAPN ABONADORA PLæSTICO D |
| 10 | 19002710 | PROTEZ.RINVIO SPANDICONCIME | FERTILIZER TRANSM. PROTECTION | PROTECTION RENVOI FERTILISEUR | SCHUTZ VORGELEGE DUNGERSTREUER | PROTECCION TRANSMISION ABONADO |
| 11 | 19004470 | SERBATOIO CONCIME 850 | FERTILIZER HOPPER 850 | TR+MIE ENGRAIS 850 | D_NGERTANK 850 | DEPËSITO ABONO 850 |
| 11 | 19003060 | SERBATOIO 1100 PLASTICA | PLASTIC TANK 1100 | RESERVOIR 1100 PLASTIQUE | PLASTIKBEHZLTER 1100 | DEPSITO 1100 PLæSTICA B |
| 12 | 19002850 | PROTEZIONE PIGNONE | PINION GUARD | PROTECTION PIGNON | RITZELSCHUTZ | PROTECCIN PI¾N PR |
| 13 | 19002920 | CORPO DISTRIBUTORE SPANDI PLA. | PLA. F.SPREADER DISTRIB.CASING | CORPS DISTRIBUTEUR EPAND. | VERTEILUNGSKTRPER STREUER PLA. | CUERPO DIST. ABONADORA PLæS. |
| 14 | 20860012 | MANICOTTO DI UNIONE L.500 | JOINT SLEEVE L.500 | MANCHON DE RACCORD L. 500 | VERBINDUNGSMUFFE L.500 | MANGUITO DE UNIN L.500 M |
| 14 | 20910044 | MANICOTTO UNIONE L.1375 | JOINT SLEEVE L.1375 | MANCHON RACCORD L. 1375 | VERBINDUNGSMUFFE L.1375 | MANGUITO DE UNIN L.1375 M |
| 14 | 20910045 | MANICOTTO UNIONE L.1180 | JOINT SLEEVE L.1180 | MANCHON RACCORD L. 1180 | VERBINDUNGSMUFFE L.1180 | MANGUITO DE UNIN L.1180 M |
| 15 | 20860052 | REGOLATORE APERTURA | OPENING REGULATOR | REGULATEUR OUVERTURE | TFFNUNGSEINSTELLER | REGULADOR ABERTURA |
| 16 | 20860086 | INGRANAGGIO 1/2 Z-12 F.Q. | GEAR 1/2 Z-12 F.Q. | ENGRENAGE 1/2 Z-12 TROUS CARRE | ZAHNRAD 1/2 Z-12 F.Q. | ENGRANAJE 1/2 Z-12 F.Q. |
| 17 | 20860088 | INGRANAGGIO 1/2 Z-12 F.T. | GEAR 1/2 Z-12 F.T. | ENGRENAGE 1/2 Z-12 TROUS RONDS | ZAHNRAD 1/2 Z-12 F.T. | ENGRANAJE 1/2 Z-12 F.T. |
| 18 | 20860090 | ASSE SX 5F.60 L.1460 | AXLE- LEFT 5-R.60 L.1460 | AXE GCH. 5 RANGEES 60 L. 1460 | ACHSE LI 5R.F.60 L.1460 | EJE IZQ. 5 FILA. 60 L.1460 |
| 19 | 20860093 | VITE DI REGOL. | ADJUSTMENT BOLT | VIS DE REGLAGE | EINSTELLSCHRAUBE. | TORNILLO DE REGULACIN S |
| 20 | 20860106 | DOSATORE SPANDI 8 PALE COMPL. | FERT.METERING DEVICE ASS.8 GRO | ROTOR DOSEUR 8C FERTI | DOSIERER DUNGER.KOMPL. 8 SEKT | DOSIFICADOR ABONO COMP.8 SECT |
| 21 | 20860126 | KIT INGR DISTR CONCIME (2+2) | KIT- MAN. DISTR. GEARS | COUPLE CON DISTR ENGRAIS (2+2) | KIT ZAHNRZDER DsNGERSTREUER | SET ENGRANAJES DISTRIB. ABONO |
| 22 | 19005040 | BOCCOLA ASSE SPANDI | FERT. SPREADER AXLE BUSH | DOUILLE AXE +PANDEUR | ACHSENBUCHSE STREUER | MANGUITO -RBOL ABONADORA |
| 23 | 22505085 | FERMO ASSE IN LAMIERA | PLATE AXLE STOP | ARRET AXE EN TOLE | FESTSTELLVORRICHTUNG BLECHACHS | BLOQUEO EJE DE CHAPA |
| 24 | 20970097 | RONDELLA 32X3X4,5 | WASHER 32X3X4-5 | RONDELLE 32X3X4-5 | UNTERLEGSCHEIBE 32X3X4-5 | ARANDELA 32X3X4-5 |
| 25 | 20970125 | RONDELLA 28X2,5X6,5 | WASHER 28X2-5X6-5 | RONDELLE 28X2-5X6-5 | UNTERLEGSCHEIBE 28X2-5X6-5 | ARANDELA 28X2-5X6-5 |
| 26 | 22220073 | RONDELLA 28X0,3X16,5 | WASHER 28X0-3X16-5 | RONDELLE 28X0-3X16-5 | UNTERLEGSCHEIBE 28X0-3X16-5 | ARANDELA 28X0-3X16-5 |
| 27 | 22230094 | SUPPORTO CUSCINETTO | BEARING SUPPORT | SUPPORT PALIER | LAGERBsCHSE | SOPORTE COJINETE |
| 28 | 22250287 | MANICOTTO DISTANZIALE SV | SPACER SLEEVE SV | MANCHON ENTRETOISE SV | ABSTANDSMUFFE SV | MANGUITO DISTANCIADOR SV |
| 29 | F01020043 | VITE 6 X60 5737 8.G ZN | BOLT 6 X60 5737 8.G GALVANIZED | VIS 6 X60 5737 8.G ZN | SCHRAUBE 6 X60 5737 8.G ZN | TORNILLO 6 X60 5737 8.G ZN |
| 30 | F01020068 | VITE 8 X40 5737 8.G ZN | BOLT 8 X40 5737 8.G GALVANIZED | VIS 8 X40 5737 8.G ZN | SCHRAUBE 8 X40 5737 8.G ZN | TORNILLO 8 X40 5737 8.G ZN |
| 31 | F01020403 | VITE 6 X16 5739 8.G ZN | BOLT 6X16 5739 8.G GALVANIZED | VIS 6X16 5739 8.G ZN | SCHRAUBE 6X16 5739 8.G ZN | TORNILLO 6X16 5739 8.G ZN |
| 32 | F01020432 | VITE 8 X16 5739 8.G ZN | BOLT 8X16 5739 8.G GALVANIZED | VIS 8X16 5739 8.G ZN | SCHRAUBE 8X16 5739 8.G ZN | TORNILLO 8X16 5739 8.G ZN |
| 33 | F01020472 | VITE 10X25 5739 8.G ZN | BOLT 10X25 5739 8.G GALVANIZED | VIS 10X25 5739 8.G ZN | SCHRAUBE 10X25 5739 8.G ZN | TORNILLO 10X25 5739 8.G ZN |
| 34 | F01070075 | VITE 4,2X38 DIN 7981 | BOLT 4-2X38 DIN 7981 | VIS 4-2X38 DIN 7981 | SCHRAUBE 4-2X38 DIN 7981 | TORNILLO 4-2X38 DIN 7981 |
| 35 | F01070011 | VITE AUTOF.4,2X9,5T.E.TAG.F.RO | BOLT- SELF-TAPPING 4-2X9-5T.E. | VIS AUTOTAR. 4-2X9-5 T. E. COU | SELBSTSCHNEID. SCHRAUBE 4-2X9- | TORNILLO AUTORROSC. 4-2X9-5 |
| 36 | F01200232 | DADO 6 5588 6.8 ZN | NUT 6 UNI 5588 6.8 GALVANIZED | ECROU 6 UNI 5588 6.8 ZN | MUTTER 6 UNI 5588 6.8 ZN | TUERCA 6 UNI 5588 6.8 ZN |
| 37 | F01200244 | DADO 8 5588 6.8 ZN | NUT 8 UNI 5588 6.8 GALVANIZED | ECROU 8 UNI 5588 6.8 ZN | MUTTER 8 UNI 5588 6.8 ZN | TUERCA 8 UNI 5588 6.8 ZN |
| 38 | F01220233 | DADO TRISTOP M10 | NUT TRISTOP M10 | ECROU TRISTOP M10 | MUTTER TRISTOP M10 | TUERCA TRISTOP M10 |
| 39 | F01410037 | RONDELLA D6 UNI 6592 ZN | WASHER D6 UNI 6592 GALVANIZED | RONDELLE D6 UNI 6592 ZN | UNTERLEGSCHEIBE D6 UNI 6592 ZN | ARANDELA D6 UNI 6592 ZN |
| 40 | F01410051 | RONDELLA D8 UNI 6592 ZN | WASHER D8 UNI 6592 GALVANIZED | RONDELLE D8 UNI 6592 ZN | UNTERLEGSCHEIBE D8 UNI 6592 ZN | ARANDELA D8 UNI 6592 ZN |
| 41 | F02100079 | SPINA EL.5 X20 DIN 1481 | PIN EL. .5 X20 DIN 1481 | FICHE EL. 5 X20 DIN 1481 | SPANNSTIFT 5X20 DIN 1481 | CLAVIJA EL.5 X20 DIN 1481 |
| 42 | F02100089 | SPINA EL.5 X36 DIN 1481 | PIN EL. 5 X36 DIN 1481 | FICHE EL. 5 X36 DIN 1481 | SPANNSTIFT 5 X36 DIN 1481 | CLAVIJA EL.5 X36 DIN 1481 |
| 43 | F02100114 | SPINA EL.6 X30 DIN 1481 | PIN EL. 6 X30 DIN 1481 | FICHE EL. 6 X30 DIN 1481 | SPANNSTIFT 6 X30 DIN 1481 | CLAVIJA EL.6 X30 DIN 1481 |
| 44 | F03011081 | GUARNIZIONI LABBRO DE100 | LIP GASKET DE100 | GARNITURES LEVRE DE100 | LIPPENDICHTUNG DE100 | GUA DELANTERA G |
| 45 | F06080196 | SPEZ.CAT.1/2 ISO 083 32MA.TR. | CUT-DOWN CHAIN .1/2 ISO 083 32 | TRONCON CHAINE 1/2 ISO 083 32 | KETTENLZNGE 1/2 ISO 083 32 GL | TRECHO CADENA 1/2 ISO 083 32 |
| 46 | F03100500 | TUBO EOLO 35 PU | EOLO PIPE 35 PU | TUBE EOLO 35 PU | ROHR EOLO 35 PU | TUBO EOLO 35 PU |
| 47 | 65336025 | MOLLA SPEC.ZN STRINGIT.ASP.SP | SPEC SPRING ZN FAN . PIPE CLAM | RESSORT SPEC. ZN SERRE-TUBE AS | SPEZIALFEDER ZN RORHSCHELLE AB | MUELLE ESPEC. ZN APRIETA TUBOS |
| 48 | 65336055 | MOLLA SPEC.REGOL.SPAND. SP | SPEC SPRING MAN. SPR. ADJUSTM. | RESSORT SPEC. REGL. EP. ENTRAI | SPEZIALFEDER STREUEREINSTELLUN | MUELLE ESPEC. REGUL. ABONADORA |

TAV. 66/152

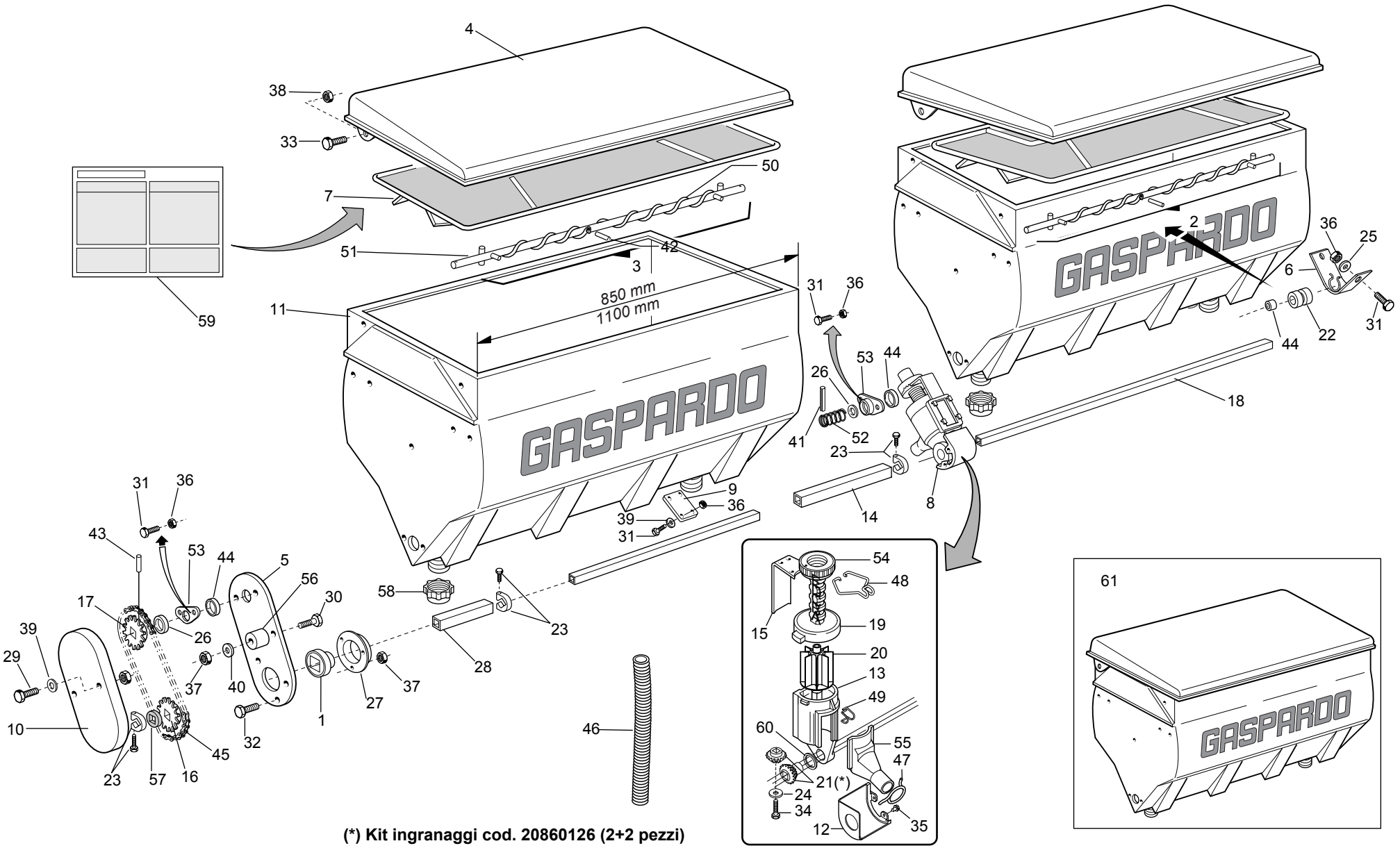


**(*) Kit ingranaggi cod. 20860126 (2+2 pezzi)**

## *SERBATOI SPANDICONCIME PLASTICA*

TAV. 66/152

| Pos. | Cod. | Descrizione | Description | Description | Benennung | Descripcion |
|---|---|---|---|---|---|---|
| 49 | 65336062 | MOLLA SPEC.SCIV.DISTR.SPAND.SP | SPEC SPRING - MAN. SPR. DISTR. | RESS. SPEC. LANCOIR DISTR. EP. | SPEZ.FEDER RUTSCHE SZAPP. STRE | MUELLE ESPEC.PLANO INCL.DISTR. |
| 50 | 65336064 | MOLLA SPEC.COCLEA DX SPAND.HL | SPEC. WORM SCREW SPRING RIGHT | RESSORT SPEC. VIS DRT. EP. ENG | SPEZ.FEDER RE SCHNECKE STREUER | MUELLE ESPEC. TORN.S/F DER. AB |
| 51 | 65336065 | MOLLA SPEC.COCLEA SX SPAND.HL | SPEC. WORM SCREW SPRING LEFT M | RESSORT SPEC. VIS GCH. EP. ENG | SPEZ.FEDER LI SCHNECKE STREUER | MUELLE ESPEC. TORN.S/F IZQ. AB |
| 52 | 65338043 | MOLLA COMP.ZN SERB. M80 | ZN TANK COMP.SPRING M80 | RESSORT COMPL. ZN RESERVOIR M8 | DRUCKFEDER ZN BEHZLTER M80 | MUELLE COMP.ZN DEPS. M80 A |
| 53 | 66248121 | BOCCOLA CON FLANGIA M80 | BUSHING W/ FLANGE M80 | SUPPORT AVEC BRIDE M80 | BsCHSE MIT FLANSCH M80 | CASQUILLO CON BRIDA M80 |
| 54 | 66248125 | GHIERA REGOLAZIONE M80 | ADJUSTMENT KNURLED NUT M80 | BAGUE REGLAGE M80 | EINSTELLMUTTER M80 | CONTRATUERCA REGULACIN M80 G |
| 55 | 66248178 | SCIVOLO DISTR.SPAND. SP | CHUTE- MANURE-SPREADER DISTRIB | LANCOIR DISTRIBUTION EP. ENGR. | DsNGERSTREUER RUTSCHE SP | PLANO INCLINADO DISTR. ABON. S |
| 56 | 66248207 | TENDICATENA SPAND. SP-520 | CHAIN TENSIONER | TENDEUR DE CHAINE EPAND. ENGR. | KETTENSPANNER DsNGERSTR. SP-52 | TENSOR DE CADENA ABON. SP-520 |
| 57 | 66248218 | RONDELLA DISTAN.SPAND. | MAN. SPR. SPACER WASHER | RONDELLE ENTRETOISE EP. ENGRAI | ABSTANDSCHEIBE DsNGERSTREUER | ARANDELA DISTAN.ABONAD. |
| 58 | F03150757 | TAPPO FILETT.SERBAT.PLASTICA | PLASTIC TANK THREADED PLUG | BOUCHON FILETE RESERV.PLAST. | GEWINDEPFROPFEN PLASTIKBEH. | TAPN ROSCADO DEPS.PLæSTICO DO |
| 59 | 19700821 | TABELLA CONCIME SP540 | FERTILIZER CHART STICKER | DECALC. TABLEAU DE ENGRAIS | ABZIEHB. TABELLE D_NGER | CAL.TABLA ABONO |
| 60 | 18701500 | RONDELLA 29,5 X38 X0,3 | WASHER 29,5 X 38 X 0,3 | RONDELLE 29,5 X38 X0,3 | UNTERLEGSCHEIBE 29,5X38X0,3 | ARANDELA 29,5 X38 X0,3 |
| 61 | 15472790 | SERBATOIO 850 PLA.2U DX | PLAS.FERT.TANK 850 2 OUT. RH | RESERV 850 PLA 2S COMPL DRT | BEHZLTER 850 PLAST. RE 2 AUSG. | DEPSITO 850 PLA.2 SAL. DER. B |
| 61 | 15472800 | SERBATOIO 850 PLA.2U SX | PLAS.FERT.TANK 850 2 OUT. L | RESERV 850 PLA 2S COMPL GCH | BEHZLTER 850 PLAST. LI 2 AUSG. | DEPSITO 850 PLA.2 SAL. IZQ. B |
| 61 | 15472810 | SERBATOIO 850 PLA.3U DX | PLAS.FERT.TANK 850 3 OUT. RH | RESERV 850 PLA 3S COMPL DRT | BEHZLTER 850 PLAST. RE 3 AUSG. | DEPSITO 850 PLA.3 SAL. DER. B |
| 61 | 15472820 | SERBATOIO 850 PLA.3U SX | PLAS.FERT.TANK 850 3 OUT. LH | RESERV 850 PLA 3S COMPL GCH | BEHZLTER 850 PLAST. LI 3 AUSG. | DEPSITO 850 PLA.3 SAL. IZQ. B |
| 61 | 15272680 | SERBATOIO 1100 3U.DX PLA.COMP. | TANK ASSY.1100 RIGHT 3U | RESERV 1100 PLA 3S COMPL DRT | KOMPL. BEHZLTER 1100 RE 3AUSG | DEPS. COMPL.1100 DER. 3 SAL. B |
| 61 | 15272720 | SERBATOIO 1100 3U.SX PLA.COMP. | TANK ASSY. 1100 LEFT 3U | RESERV 1100 PLA 3S COMPL GCH | KOMPL. BEHZLTER 1100 LI 3AUSG | DEPS. COMPL.1100 IZQ. 3 SAL. B |
| 61 | 15471430 | SERBATOIO 1500 3U DX | TANK ASSY.1500 LEFT 3U | RESERV 1500 FER 3S COMPL DRT | KOMPL. BEHZLTER 500 LI 3U | DEPS. COMPL.500 IZQ. 3 SAL. B |
| 61 | 15471440 | SERBATOIO 1500 3U SX | TANK ASSY.1500 LEFT 3U | RESERV 1500 FER 3S COMPL DRT | KOMPL. BEHZLTER 1500 LI 3U | DEPS. COMPL.1500 IZQ. 3 SAL. B |

TAV. 66/302

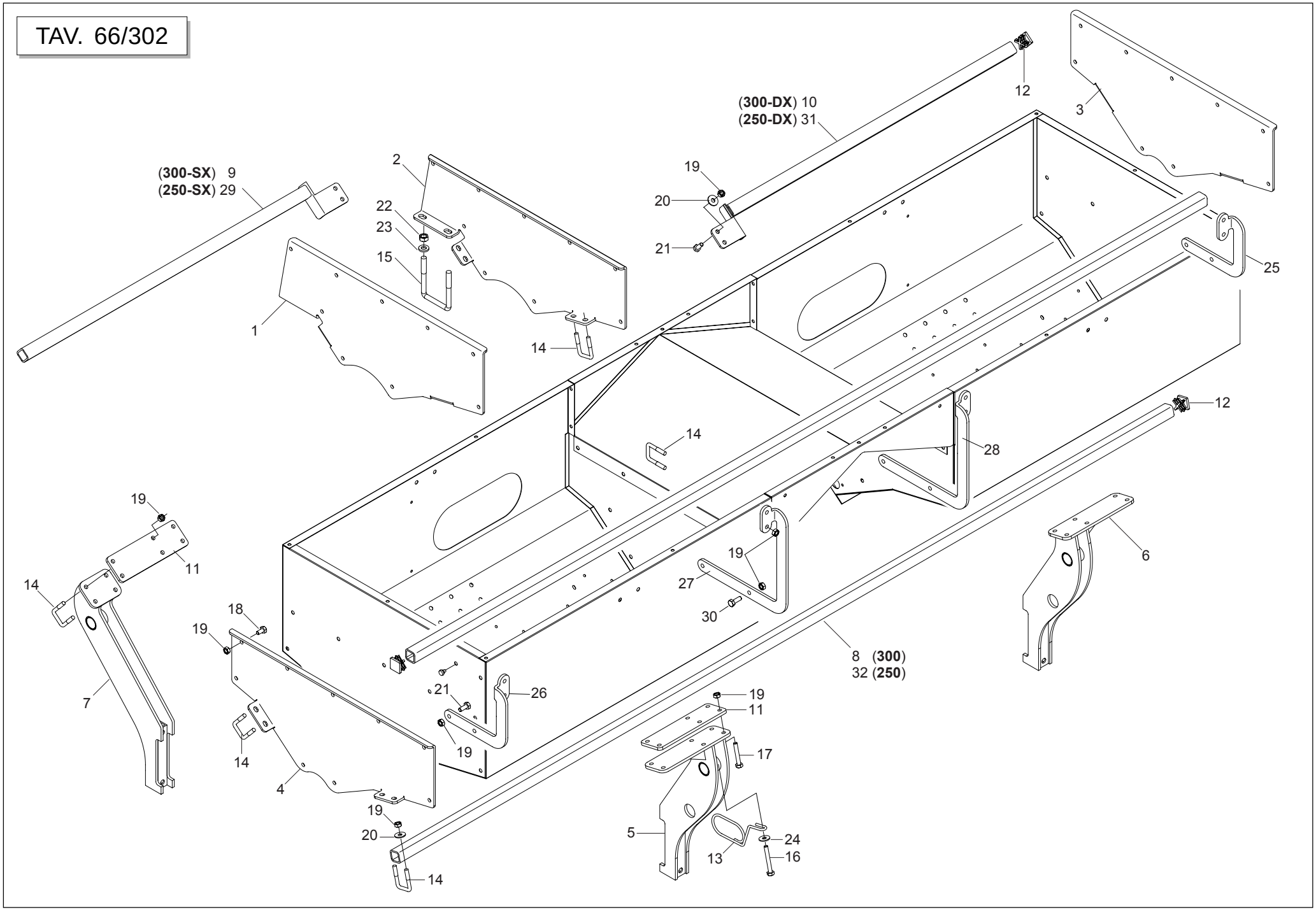




GASPARDO

cod. 19530195

## *SUPPORTI SERBATOIO SPANDICONCIME UNICO*

TAV. 66/302

| Pos. | Cod. | Descrizione | Description | Description | Benennung | Descripcion |
|---|---|---|---|---|---|---|
| 1 | 15273320 | FIANCO SUPPORTO INT. SX | INT. LEFT SUPPORT | SUPPORT INT. GCH. | LINKE INNENHALTERUNG | SOPORTE INTERIOR IZQ. |
| 2 | 15273330 | FIANCO SUPPORTO INT. DX | INT. RIGHT SUPPORT | SUPPORT INT. DRT. | RECHTE INNENHALTERUNG | SOPORTE INTERIOR DER. |
| 3 | 15273340 | FIANCO SUPPORTO EST. DX | EXTERN. RIGHT SUPPORT | SUPPORT EXTERNE DRT. | RECHTE EXT.HALTERUNG | SOPORTE EXT. DER. |
| 4 | 15273350 | FIANCO SUPPORTO EST. SX | EXTERN. LEFT SUPPORT | SUPPORT EXTERNE GCH. | LINKE EXT.HALTERUNG | SOPORTE EXT. IZQ. |
| 5 | 15273411 | SUPPORTO POST.SX LUNGO | REAR SUPPORT LH. LONG | SUPPORT ARRIERE GCH. LONG | HINT. HALTERUNG LI LANGES | SOPORTE TRASERO IZQ. LARGO |
| 6 | 15273441 | SUPPORTO POST.DX | REAR SUPPORT RH. | SUPPORT ARRIERE DRT. | HINT. HALTERUNG RE | SOPORTE TRASERO DER. |
| 7 | 15273471 | SUPPORTO FRONTALE | FRONT SUPPORT | SUPPORT AVANT | VORD. HALTERUNG | SOPORTE DELANTERO |
| 8 | 07000028 | TUBO Q.35 X4 X2980 | SQUARE PIPE 35 X 35 X 3 X 2980 | TUBE CARRE 35 X 35 X 3 X 2980 | VIERKANTROHR 35 X 35 X 3 X 298 | TUBO CUADRADO 35 X 35 X 3 X 29 |
| 9 | 15273500 | TUBO APPOGGIO FRONT.SX | TUBE REST LH. | TUBE REPOSE GCH. | ROHRENAUFLAGE LI. | TUBO APOYO IZQ. |
| 10 | 15273520 | TUBO APPOGGIO FRONT.DX | TUBE REST RH. | TUBE REPOSE DRT. | ROHRENAUFLAGE RE. | TUBO APOYO DER. |
| 11 | 15273530 | PIASTRA ATTACCO SUPPORTO | REST COUPLING PLATE | PLAQUE ATTELAGE SUPPORT | KUPPLUNGSPLATTE HALTERUNG | PLACA CONEXION SOPORTE |
| 12 | 15475560 | TAPPO TUBO 35X35 | PLUG PIPE 35X35 | BOUCHON TUBE 35X35 | ROHRPFROPFEN 35X35 | TAP N TUBO 35X35 |
| 13 | 18904050 | MOLLA GUIDA 2 TUBI DEPRESS. | TUBE GUIDE SPRING | RESSORT GUIDE-TUBES | EDER ROHRF_HRUNG | MUELLE GUA TUBOS |
| 14 | 22250272 | CAVALLOTTO SUPP.DISCO SV | DISK SUPPORT.ELEMENT U BOLT SV | CAVALIER SUPPORT DISQUE SV | VERBINDUNG SCHEIBENHALTERUNG S | PERNO EN U SOP. DISCO SV |
| 15 | 15111050 | CAVALLOTTO M14X96 - 119 ZN | U-BOLT M14X96 - 119 ZN | CAVALIER M14X96 - 119 ZN | VERBINDUNG M14X96 - 119 ZN | PERNO EN U M14X96 - 119 ZN |
| 16 | F01020125 | VITE 10X75 5737 8.G ZN | BOLT 10X75 5737 8.G GALVANIZED | VIS 10X75 5737 8.G ZN | SCHRAUBE 10X75 5737 8.G ZN | TORNILLO 10X75 5737 8.G ZN |
| 17 | F01020143 | VITE M10X 1,5X 65 U5737 8.8 IX | BOLT M10X 1,5X 65 U5737 8.8 IX | VIS M10X 1,5X 65 U5737 8.8 IX | SCHRAUBE M10X 1,5X 65 U5737 8. | TORNIL. M10X 1,5X 65 U5737 8.8 |
| 18 | F01020462 | VITE M10X1,5 X 20 U5739 8.8 IX | BOLT M10X1,5 X 20 U5739 8.8 IX | VIS M10X1,5 X 20 U5739 8.8 IX | SCHRAUBE M10X1,5 X 20 U5739 8. | TORNIL. M10X1,5 X 20 U5739 8.8 |
| 19 | F01200271 | DADO 10 5588 6.8 INOX | NUT 10 5588 6.8 INOX | ECROU 10 5588 6.8 INOX | MUTTER 10 5588 6.8 INOX | TUERCA 10 5588 6.8 INOX |
| 20 | F01420059 | RONDELLA 11X30X2,5 6593 A2 | WASHER 11X30X2,5 6593 A2 | RONDELLE 11X30X2,5 6593 A2 | UNTERLEGSCHEIBE 11X30X2,5 6593 | ARANDELA 11X30X2,5 6593 A2 |
| 21 | F01020463 | VITE 10X25 5739 INOX A2 | SCREW 10X25 5739 INOX A2 | VIS 10X25 5739 INOX A2 | SCHRAUBE 10X25 5739 INOX A2 | TORNILLO 10X25 5739 INOX A2 |
| 22 | F01200306 | DADO 14 5588 6.8 ZN | NUT 14 UNI 5588 6.8 GALVANIZED | ECROU 14 UNI 5588 6.8 ZN | MUTTER 14 UNI 5588 6.8 ZN | TUERCA 14 UNI 5588 6.8 ZN |
| 23 | 20970011 | RONDELLA 28X4X14,5 | WASHER 28X4X14.5 | RONDELLE 28X4X14,5 | UNTERLEGSCHEIBE 28X4X14,5 | ARANDELA 28X4X14,5 |
| 24 | F01420060 | ROND.PIANA 11X30X2,5 6593 ZN | FLAT WASHER 11X30X2-5 6593 ZN | ROND.PLATE 11X30X2-5 6593 ZN | SCHEIBE 11X30X2-5 6593 ZN | ARAND. PLANA 11X30X2-5 6593 ZN |
| 25 | 15273710 | SUPPORTO SX TUBO MICRO | MICRO LEFT LONG SUPPORT | SUPPORT LONG GCH TUBE MICRO | LANGE HALTERUNG LI MICRO | SOPORTE LARGO IZQ. TUBO MICRO |
| 26 | 15273720 | SUPPORTO DX TUBO MICRO | MICRO PIPE SUPPORT R.T | SUPPORT DROIT TUBE MICRO | HALTERUNG RE MICRO | SOPORTE DCHO TUBO MICRO |
| 27 | 15273730 | SUPPORTO LUNGO SX TUBO MICRO | MICRO LH. LONG SUPPORT | SUPPORT LONG GCH. TUBE MICRO | LANGE HALTERUNG LI MICRO | SOPORTE LARGO IZQ. TUBO MICRO |
| 28 | 15273740 | SUPPORTO LUNGO DX TUBO MICRO | MICRO RH. LONG SUPPORT | SUPPORT LONG DROIT TUBE MICRO | LANGE HALTERUNG RE MICRO | SOPORTE LARGO DER. TUBO MICRO |
| 29 | 15274040 | TUBO APPOGGIO FRONTALE SX | TUBE REST LH. | TUBE REPOSE GCH. | ROHRENAUFLAGE LI. | TUBO APOYO IZQ. |
| 30 | F01020464 | VITE M10X1,5 X 30 U5739 8.8 IX | BOLT M10X1,5 X 30 U5739 8.8 IX | VIS M10X1,5 X 30 U5739 8.8 IX | SCHRAUBE M10X1,5 X 30 U5739 8. | TORNIL. M10X1,5 X 30 U5739 8.8 |
| 31 | 15274050 | TUBO APPOGGIO FRONTALE DX | TUBE REST RH. | TUBE REPOSE DRT. | ROHRENAUFLAGE RE. | TUBO APOYO DER. |
| 32 | 15475130 | TUBO SUPPORTO SERBATOIO L.2480 | TANK SUPPORT PIPE L.2480 | TUBE SUPPORT RESERVOIR L2460 | ROHR HALTERUNG BEHZLTER L.2480 | TUBO SOPORTE DEPSITO L 2480 T |

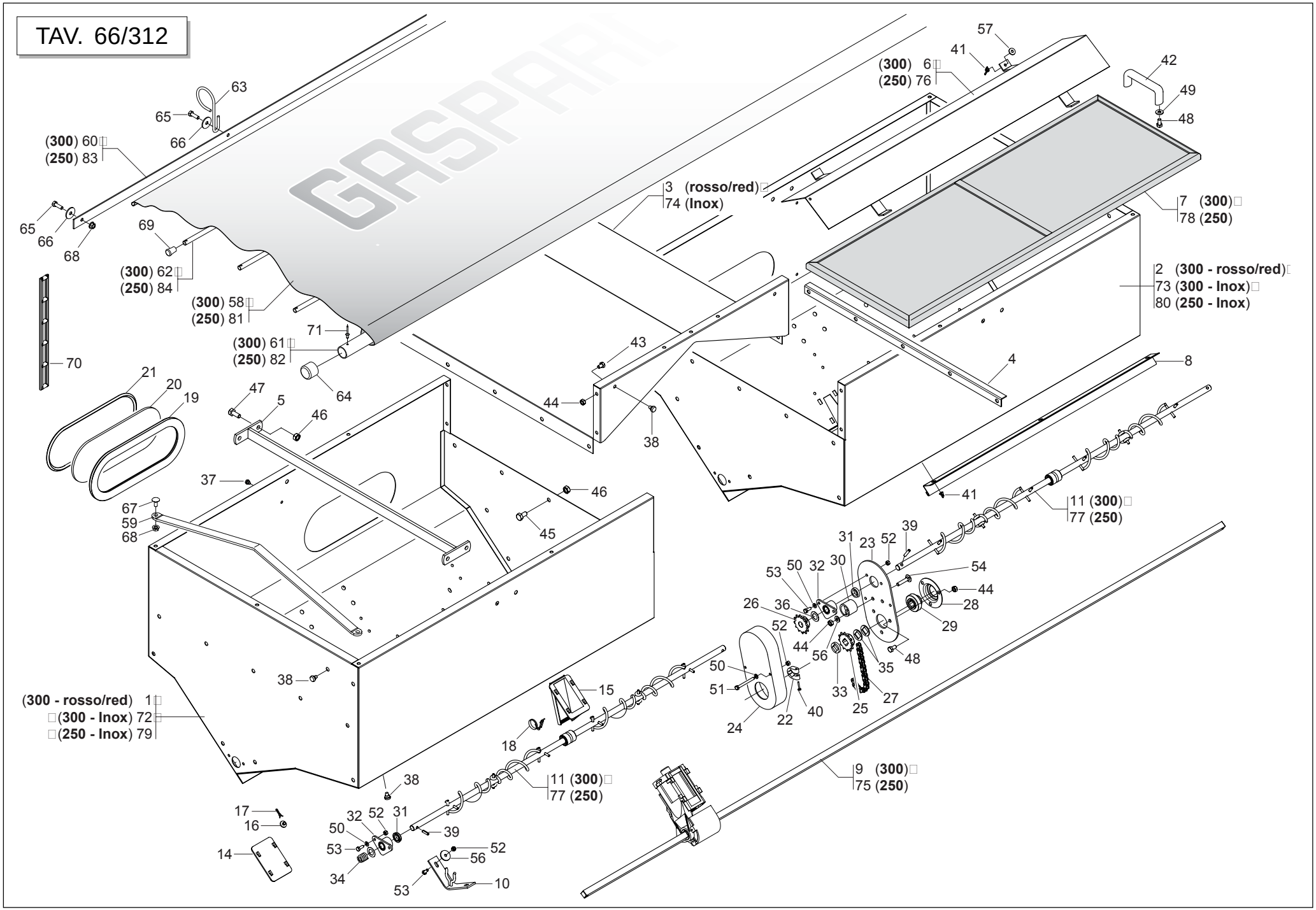
TAV. 66/312
GASPARDO
(300) 60
(250) 83
(300) 62
(250) 84
(300) 58
(250) 81
(300) 61
(250) 82
(300 - rosso/red) 1
(300 - Inox) 72
(250 - Inox) 79
3 (rosso/red)
74 (Inox)
(300) 6
(250) 76
7 (300)
78 (250)
2 (300 - rosso/red)
73 (300 - Inox)
80 (250 - Inox)
11 (300)
77 (250)
9 (300)
75 (250)

## *SERBATOIO SPANDICONCIME UNICO*

TAV. 66/312

| Pos. | Cod. | Descrizione | Description | Description | Benennung | Descripcion |
|---|---|---|---|---|---|---|
| 1 | 15273230 | SERBATOIO SX MTE300 | LEFT TANK MTE300 | RESERVOIR GCH MTE300 | BEHZLTER LI MTE300 | DEPSITO IZQ. MTE300 |
| 2 | 15273280 | SERBATOIO DX MTE300 | RIGHT TANK MTE300 | RESERVOIR DRT MTE300 | BEHZLTER RE MTE300 | DEPSITO DER. MTE300 |
| 3 | 15273310 | LAMIERA CENTRALE MTE300 | UNION UNIT MTE300 | ELEM. UNION MTE300 | VERBINDUNGSELEM. MTE300 | ELEM.UNIËN MTE300 |
| 4 | 15273540 | LAMIERA APPOGGIO GRIGLIA | GRID SUPPORT BRACKET | +TRIER SUPPORT GRILLE | GITTERHALTB_GEL | ESTRIBO SOPORTE REJILLA |
| 5 | 15273560 | TIRANTE INTERNO | INT. TIE ROD | TRINGLE INT. | INNERE SPANNSTANGE | TIRANTE INTERIOR |
| 6 | 15273580 | TEGOLO MTE300 | BENT TILE MTE300 | GALOCHE MTE300 | DACHZIEGEL MTE300 | TEJA MTE300 |
| 7 | 15273840 | GRIGLIA SERBATOIO MTE300 | TANK GRID. MTE300 | GRILLE RESERVOIR MTE300 | BEHZLTERGITTER MTE300 | REJILLA DEPS. MTE300 |
| 8 | 15273621 | PORTA PULIZIA | CLEANING DOOR | PORTE DE NETTOYAGE | REINIGUNGST_R | PUERTA LIMPIEZA |
| 9 | 15273750 | ASSE TRASM.L.2800 | TRANSMISSION SHAFT L. 2800 | AXE TRANSMISSION L.2800 | ANTRIEBSACHSE L.2800 | EJE TRANSM.L.2800 |
| 10 | 15273700 | SUPPORTO COCLEA | SCREW SUPPORT | SUPPORT VIS ALIMENTATION | HALTERUNG SCHNECKE | SOPORTE CËCLEA |
| 11 | 15273610 | ASSE AGITAT.SERBAT.UNICO COMPL | STIRRER SPINDLE BB300 TANK | AXE AGITATEUR RESERVOIR BB300 | SAMENMISCHERACHSE BEH. BB300 | EJE AGITAD. DEPS. BB300 |
| 12 | 19003660 | SUPPORTO | SUPPORT | SUPPORT | HALTERUNG | SOPORTE |
| 13 | 16670180 | INGRANAGGIO Z.15-DISTANZ.COMPL | COMPLETE GEAR Z.15-SPACER | ENGRENAGE Z.15 ENTRET. COMPL. | ZAHNRAD Z.15-KOMPL. DISTANZST | ENGRANAJE Z.15-DISTANC.COMPL |
| 14 | 66248184 | CHIUSURA USCITA SERB.SPAND.SP | OUTLET CLOSURE- MAN.SPREAD. TA | FERMETURE SORTIE RESERVOIR FER | VERSCHLUSS AUSTRITT DsNGERSTR. | CIERRE SALIDA DEPS. ABON. SP I |
| 15 | 66248187 | SCARICO SERB.SPAND.TIPO MICRO | MICRO TYPE MAN.SPR.TANK DISCH. | TRAPPE DE VIDANGE TYPE MICRO | BEHZLTERENTLADUNG STREUER TYP | DESCARGA DEPS. ABON.TIPO MICRD |
| 16 | 66248224 | FERMO DISTRIBUTORE SPAND. | FERT. SPR. DISTRIB. STOP | ARRET DISTRIBUTEUR EP. ENGRAIS | FESTSTELLVORRICHTUNG SZAPP. ST | BLOQUEO DISTRIBUIDOR ABON. |
| 17 | 65336089 | MOLLA SPEC.TENUTA FERMO SPAND. | SPEC.SPRING- BLOCK. MAN. SPR. | RESSORT SPEC. D'ETANCHEITE ARR | SPEZIALFEDER DICHTUNG STREUER | MUELLE ESPEC. RETENC. BLOQ |
| 18 | 65336080 | MOLLA SPEC.SCARICO SPAND.T.M. | SPEC.SPRING- MAN. SPR. DISCHAR | RESSORT SPEC. DECHARGEMENT FER | SPEZIALFEDER STREUERENTLADUNG | MUELLE ESPEC. DESCARGA ABONAD. |
| 19 | F03011155 | GUARNIZIONE VETRO | GLASS SEAL | GARNITURE VERRE | GLASDICHTUNG | JUNTA VIDRIO |
| 20 | 16021080 | VETRO CONTROLLO LIVELLO SEMI | SEED LEVEL CHECKING GLASS | VITRE CONTROLE NIV. GRAINES | KONTROLLFENSTER SAMENSTAND | VIDRIO CONTROL NIVEL SEMILLAS |
| 21 | 68005092 | TENDITORE GUARNIZIONE | TURNBUCKLE GASKET | TENDEUR GARNITURE | DICHTUNGSSPANNER | TENSOR JUNTA |
| 22 | 22505085 | FERMO ASSE IN LAMIERA | PLATE AXLE STOP | ARRET AXE EN TOLE | FESTSTELLVORRICHTUNG BLECHACHS | BLOQUEO EJE DE CHAPA |
| 23 | 15471930 | PROTEZIONE | GUARD | PROTECTION | SCHUTZ | PROTECCIN P |
| 24 | 17170270 | PROTEZIONE RINVIO SERBATOIO | INTERNAL TRANSMISS. TANK PROTE | PROTECTION RENVOI TREMIE | VORGELEGESCHUTZ BEH-LTER | PROTECCION ENVIO DEPOSITO |
| 25 | 20860086 | INGRANAGGIO 1/2 Z-12 F.Q. | GEAR 1/2 Z-12 F.Q. | ENGRENAGE 1/2 Z-12 TROUS CARRE | ZAHNRAD 1/2 Z-12 F.Q. | ENGRANAJE 1/2 Z-12 F.Q. |
| 26 | 20860088 | INGRANAGGIO 1/2 Z-12 F.T. | GEAR 1/2 Z-12 F.T. | ENGRENAGE 1/2 Z-12 TROUS RONDS | ZAHNRAD 1/2 Z-12 F.T. | ENGRANAJE 1/2 Z-12 F.T. |
| 27 | F06080196 | SPEZ.CAT.1/2 ISO 083 32MA.TR. | CUT-DOWN CHAIN .1/2 ISO 083 32 | TRONCON CHAINE 1/2 ISO 083 32 | KETTENLZNGE 1/2 ISO 083 32 GL | TRECHO CADENA 1/2 ISO 083 32 |
| 28 | 22230094 | SUPPORTO CUSCINETTO | BEARING SUPPORT | SUPPORT PALIER | LAGERBsCHSE | SOPORTE COJINETE |
| 29 | 14830390 | CUSCINETTO FORO QUADRO | SQUARE-HOLED BEARING | ROULEMENT AL+SAGE CARR+ | VIERKANTLAGER | COJINETE ORIFICIO CUADRADO |
| 30 | 66248207 | TENDICATENA SPAND. SP-520 | CHAIN TENSIONER | TENDEUR DE CHAINE EPAND. ENGR. | KETTENSPANNER DsNGERSTR. SP-52 | TENSOR DE CADENA ABON. SP-520 |
| 31 | F03011081 | GUARNIZIONI LABBRO DE100 | LIP GASKET DE100 | GARNITURES LEVRE DE100 | LIPPENDICHTUNG DE100 | GUA DELANTERA G |
| 32 | 66248121 | BOCCOLA CON FLANGIA M80 | BUSHING W/ FLANGE M80 | SUPPORT AVEC BRIDE M80 | BsCHSE MIT FLANSCH M80 | CASQUILLO CON BRIDA M80 |
| 33 | 66248218 | RONDELLA DISTAN.SPAND. | MAN. SPR. SPACER WASHER | RONDELLE ENTRETOISE EP. ENGRAI | ABSTANDSCHEIBE DsNGERSTREUER | ARANDELA DISTAN.ABONAD. |
| 34 | 65338043 | MOLLA COMP.ZN SERB. M80 | ZN TANK COMP.SPRING M80 | RESSORT COMPL. ZN RESERVOIR M8 | DRUCKFEDER ZN BEHZLTER M80 | MUELLE COMP.ZN DEPS. M80 A |
| 35 | 18701650 | RONDELLA FORO QUADRO ZN | WASHER 16,5X30X2,5 ZN | RONDELLE 16,5X30X2,5 ZN | UNTERLEGSCHEIBE 16,5X30X2,5 ZN | ARANDELA 16,5X30X2,5 ZN |
| 36 | 22220073 | RONDELLA 28X0,3X16,5 | WASHER 28X0-3X16-5 | RONDELLE 28X0-3X16-5 | UNTERLEGSCHEIBE 28X0-3X16-5 | ARANDELA 28X0-3X16-5 |
| 37 | 19003160 | TAPPO PER FORO D.7 | PLUG FOR D.7 HOLE | BOUCHON POUR TROU D.7 P | FROPFEN FsR LOCH D.7 T | APN PARA AGUJERO D.7 DO |
| 38 | 66248223 | TAPPO SUPP.SPAND.D.11 | PLUG MAN. SPR. SUPP. D.11 | BOUCHON SUPPORT EP. ENGRAIS D. | HALTERUNGSPFROPFEN DsNGERSTR. | TAPN SOPORTE ABON.D.11 D |
| 39 | F02100114 | SPINA EL.6 X30 DIN 1481 | PIN EL. 6 X30 DIN 1481 | FICHE EL. 6 X30 DIN 1481 | SPANNSTIFT 6 X30 DIN 1481 | CLAVIJA EL.6 X30 DIN 1481 |
| 40 | F01070074 | VITE 4,2X25 DIN 7981 | BOLT 4-2X25 DIN 7981 | VIS 4-2X25 DIN 7981 | SCHRAUBE 4-2X25 DIN 7981 | TORNILLO 4-2X25 DIN 7981 |
| 41 | F01240012 | DADO 6 5448 5.8 ZN | NUT 6 UNI 5448 5.8 ZN | ECROU 6 UNI 5448 5.8 ZN | MUTTER 6 UNI 5448 5.8 ZN | TUERCA 6 UNI 5448 5.8 ZN |
| 42 | 67008045 | MANIGLIA | HANDLE | POIGNEE | GRIFF | MANIJA |
| 43 | F01020426 | VITE M8 X1,25X 12 U5739 8.8 IX | BOLT M8 X1,25X 12 U5739 8.8 IX | VIS M8 X1,25X 12 U5739 8.8 IX | SCHRAUBE M8 X1,25X 12 U5739 8. | TORNIL. M8 X1,25X 12 U5739 8.8 |
| 44 | F01200245 | DADO M 8X1,25 U5588 6.8 IX | NUT M 8X1,25 U5588 6.8 IX | ECROU M 8X1,25 U5588 6.8 I | MUTTER M 8X1,25 U5588 6.8 | TUERCA M 8X1,25 U5588 6.8 |
| 45 | F01020462 | VITE M10X1,5 X 20 U5739 8.8 IX | BOLT M10X1,5 X 20 U5739 8.8 IX | VIS M10X1,5 X 20 U5739 8.8 IX | SCHRAUBE M10X1,5 X 20 U5739 8. | TORNIL. M10X1,5 X 20 U5739 8.8 |
| 46 | F01200271 | DADO 10 5588 6.8 INOX | NUT 10 5588 6.8 INOX | ECROU 10 5588 6.8 INOX | MUTTER 10 5588 6.8 INOX | TUERCA 10 5588 6.8 INOX |
| 47 | F01020463 | VITE 10X25 5739 INOX A2 | SCREW 10X25 5739 INOX A2 | VIS 10X25 5739 INOX A2 | SCHRAUBE 10X25 5739 INOX A2 | TORNILLO 10X25 5739 INOX A2 |
| 48 | F01020434 | VITE M 8X1,25X 16 U5739 8.8 IX | BOLT M 8X1,25X 16 U5739 8.8 IX | VIS M 8X1,25X 16 U5739 8.8 IX | SCHRAUBE M 8X1,25X 16 U5739 8. | TORNIL. M 8X1,25X 16 U5739 8.8 |
| 49 | 20970140 | RONDELLA 20X2X8,5 | WASHER 20X2X8,5 | RONDELLE 20X2X8,5 | UNTERLEGSCHEIBE 20X2X8,5 | ARANDELA 20X2X8,5 |
| 50 | F01410035 | RONDELLA ACC.INOX A2 D 6 6592* | S. STEEL WASHER A2 D 6 6592* | RONDELLE AC.INOX A2 D 6 6592* | EDELST.UNTERL.SCH. A2D6 6592* | ARANDELA AC.INOX A2 D 6 6592* |
| 51 | F01020043 | VITE 6 X60 5737 8.G ZN | BOLT 6 X60 5737 8.G GALVANIZED | VIS 6 X60 5737 8.G ZN | SCHRAUBE 6 X60 5737 8.G ZN | TORNILLO 6 X60 5737 8.G ZN |
| 52 | F01200233 | DADO M 6X 1 U5588 IX | NUT M 6X 1 U5588 IX | ECROU M 6X 1 U5588 I | MUTTER M 6X 1 U5588 | TUERCA M 6X 1 U5588 |
| 53 | F01020419 | VITE M6 X1 X 16 U5739 8.8 IX | BOLT M6 X1 X 16 U5739 8.8 IX | VIS M6 X1 X 16 U5739 8.8 IX | SCHRAUBE M6 X1 X 16 U5739 8. | TORNIL. M6 X1 X 16 U5739 8.8 |
| 54 | F01020068 | VITE 8 X40 5737 8.G ZN | BOLT 8 X40 5737 8.G GALVANIZED | VIS 8 X40 5737 8.G ZN | SCHRAUBE 8 X40 5737 8.G ZN | TORNILLO 8 X40 5737 8.G ZN |
| 55 | F01020398 | VITE 6 X12 5739 8.G ZN | BOLT 6X12 5739 8.G GALVANIZED | VIS 6X12 5739 8.G ZN | SCHRAUBE 6X12 5739 8.G ZN | TORNILLO 6X12 5739 8.G ZN |

# TAV. 66/312

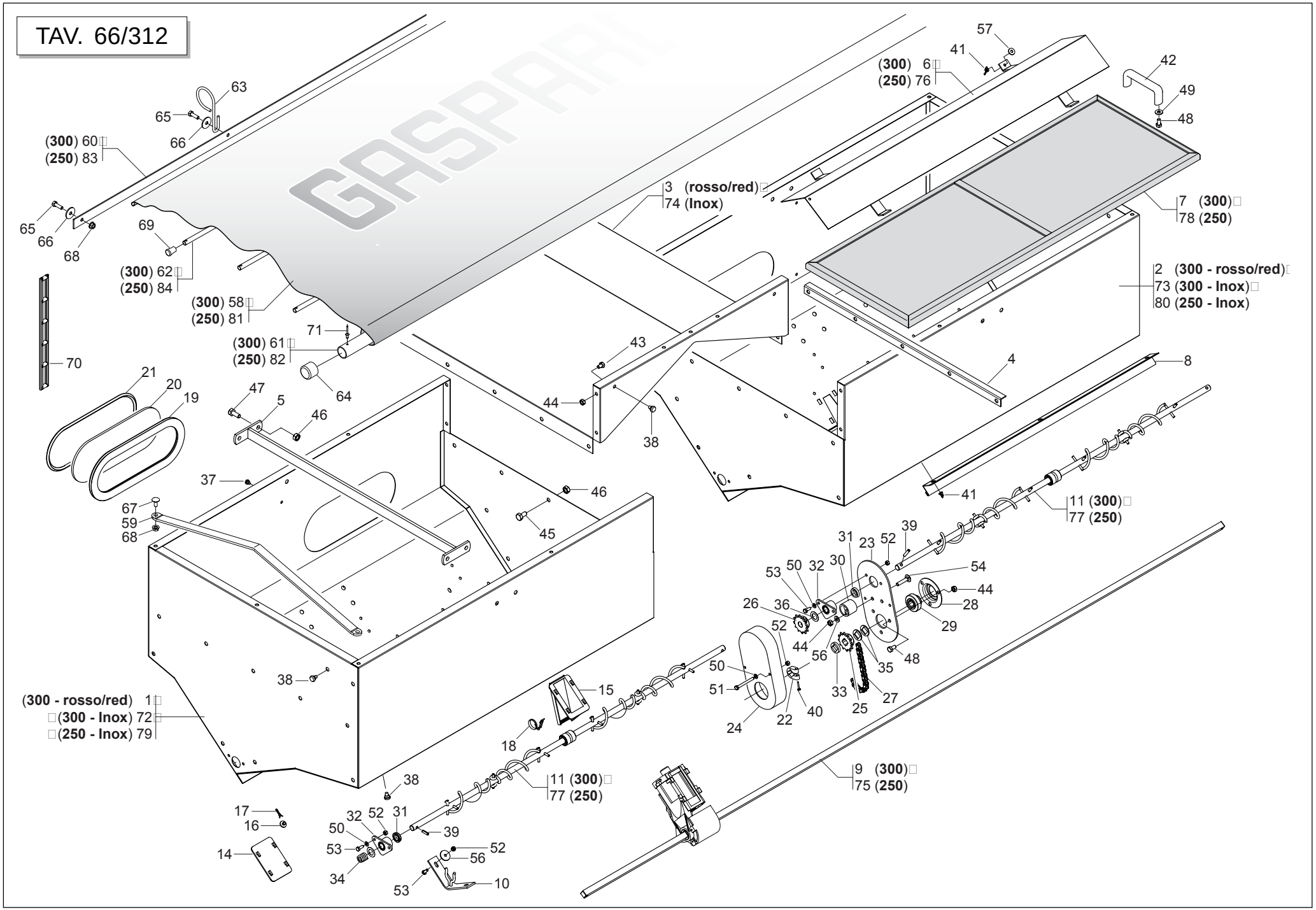
(300) 60
(250) 83
63
65
66
65
66
68
69
(300) 62
(250) 84
(300) 58
(250) 81
71
(300) 61
(250) 82
64
70
21
20
19
47
5
46
37
67
59
68
38
(300 - rosso/red) 1
(300 - Inox) 72
(250 - Inox) 79
17
16
14
38
32
52
31
50
53
34
39
52
56
53
10
18
15
11 (300)
77 (250)
3 (rosso/red)
74 (Inox)
43
44
38
46
45
57
41
(300) 6
(250) 76
42
49
48
7 (300)
78 (250)
2 (300 - rosso/red)
73 (300 - Inox)
80 (250 - Inox)
4
8
41
11 (300)
77 (250)
39
31
23
52
53
50
32
30
54
44
26
36
28
29
52
44
56
48
35
50
51
33
27
25
24
22
40
9 (300)
75 (250)

## *SERBATOIO SPANDICONCIME UNICO*

TAV. 66/312

| Pos. | Cod. | Descrizione | Description | Description | Benennung | Descripcion |
|---|---|---|---|---|---|---|
| 56 | 20970125 | RONDELLA 28X2,5X6,5 | WASHER 28X2-5X6-5 | RONDELLE 28X2-5X6-5 | UNTERLEGSCHEIBE 28X2-5X6-5 | ARANDELA 28X2-5X6-5 |
| 57 | F01420039 | ROSETTA M6 6,4X24X2 U6593 IX | WASHER M6 6,4X24X2 U6593 IX | RONDELLE M6 6,4X24X2 U6593 IX | SCHEIBE M6 6,4X24X2 U6593 IX | ARANDELA M6 6,4X24X2 U6593 IX |
| 58 | 15273771 | TELO COPRISERBATOIO MTE300 | HOPPER COVER-SHEET MTE300 | TOILE COUVRE-TREMIE MTE300 | TRICHTERABDECKTUCH MTE300 | ONA PROTEC. TOLVA MTE300 |
| 59 | 15273631 | SUPPORTO TELO COPRISERBATOIO | COVERING SUPPORT | SUPPORT TOILE | PLANENHALTERUNG | SOPORTE LONA |
| 60 | 15273680 | ASTA FISSAGGIO TELO | FIXING ROD | TIGE DE FIXATION | BEFESTIGUNGSTANGE | VARILLA DE FIJACIN |
| 61 | 15273660 | TUBO TELO COPRISERBATOIO | HOPPER COVER-SHEET TUBE | TUBE TOILE COUVRE-TREMIE | ROHR TRICHTERABDECKTUCH | TUBO ONA PROTEC. TOLVA |
| 62 | 15273670 | TUBO RINFORZO TELO | REINFORCEMENT ROD | TIGE DE RENFORCEMENT | VERSTZRKUNGSSTANGE | VARILLA DE REFUERZO |
| 63 | 65336131 | ANELLO TUBO ASPIR.SEMINATORE | SEED DRILL ASPIRATN. TUBE RING | BAGUE TUBE ASPIR. SEMEUR | SAUGROHRRING SZREIHE | ANILLO TUBO ASPIR.SEMBRADOR |
| 64 | 66248098 | TAPPO CONVOGLIATORE DEPR. SP | AIR PUMP CONVEYOR PLUG SP | BOUCHON CONVOYEUR TURBINE SP | VAKUUM FTRDERPFROPFEN SP | TAPN CONDUCTOR DEPR. SP D |
| 65 | F01020457 | VITE M8 X1,25X 20 U5739 8.8 IX | BOLT M8 X1,25X 20 U5739 8.8 IX | VIS M8 X1,25X 20 U5739 8.8 IX | SCHRAUBE M8 X1,25X 20 U5739 8. | TORNIL. M8 X1,25X 20 U5739 8.8 |
| 66 | F01420049 | ROSETTA M8 8,4X32X2 U6593 ZG | WASHER M8 8,4X32X2 U6593 ZG | RONDELLE M8 8,4X32X2 U6593 ZG | SCHEIBE M8 8,4X32X2 U6593 ZG | ARANDELA M8 8,4X32X2 U6593 ZG |
| 67 | F01060040 | VITE 8 X20 5732 4.6 ZN | BOLT 8 X20 5732 4.6 GALVANIZED | VIS 8 X20 5732 4.6 ZN | SCHRAUBE 8 X20 5732 4.6 ZN | TORNILLO 8 X20 5732 4.6 ZN |
| 68 | F01260043 | DADO FLANG.M8 DIN 6923 8.8 ZN | FLANGE NUT M8 DIN 6923 8.8 GAL | ECROU BRIDE .M8 DIN 6923 8.8 Z | GEFLANSCHTE MUTTER M8 DIN6923 | TUERCA BRIDA M8 DIN 6923 8.8 Z |
| 69 | F05150472 | PUNTALE PVC D.10 | PVC TIP D.10 | EMBOUT PVC D. 10 | STTSSELSCHAFT PVC D.10 | PUNTAL PVC D.10 |
| 70 | F06080487 | CATENA AGGANCIO TELO IN GOMMA | RUBBER FRAME CONNECTION CHAIN | CHA+NE ACCROCHAGE TOILE EN CAO | KETTE BEFESTIGUNG GUMMITUCH | CADENA ENGANCHE LONA DE CAUCHO |
| 71 | F02250123 | RIVETTO STR. 4,8X 9 U9200A AL | PULL RIVET 4,8X 9 U9200A ALL | RIVET A RUPTURE 4,8X 9 U9200A | REISSNIETE 4,8X 9 U9200A ALL | REMACHE DESGAR. 4,8X 9 U9200A |
| 72 | 15274660 | SERBATOIO SX INOX | LEFT TANK INOX | RESERVOIR GCH INOX | BEHZLTER LI INOX | DEPSITO IZQ. INOX |
| 73 | 15274670 | SERBATOIO DX INOX | RIGHT TANK INOX | RESERVOIR DRT INOX | BEHZLTER RE INOX | DEPSITO DER. INOX |
| 74 | 15274680 | LAMIERA CENTRALE INOX | UNION UNIT INOX | ELEM. UNION INOX | VERBINDUNGSELEM. INOX | ELEM.UNIËN INOX |
| 75 | 13732200 | ASSE TRASMISSIONE L.2485 | TRANSMISSION AXLE L2485 | AXE TRANSMISSION L.2485 | sBERTRAGUNGSACHSE L.2485 | EJE TRANSMISIN L 2485 A |
| 76 | 15274060 | TEGOLO 250 | BENT TILE 250 | GALOCHE 250 | DACHZIEGEL 250 | TEJA 250 |
| 77 | 15274080 | ASSE AGITAT.S.UNICO 250 COMPL | STIRRER SPINDLE BB250 TANK | AXE AGITATEUR RESERVOIR BB250 | SAMENMISCHERACHSE BEH. BB250 | EJE AGITAD. DEPS. BB250 |
| 78 | 15274150 | GRIGLIA SERBATOIO | TANK GRID. | GRILLE RESERVOIR | BEHZLTERGITTER | REJILLA DEPS. |
| 79 | 15274690 | SERBATOIO SX 250 INOX | LEFT TANK 250 INOX | RESERVOIR GCH 250 INOX | BEHZLTER LI 250 INOX | DEPSITO IZQ. 250 INOX |
| 80 | 15274700 | SERBATOIO DX 250 INOX | RIGHT TANK 250 INOX | RESERVOIR DRT 250 INOX | BEHZLTER RE 250 INOX | DEPSITO DER. 250 INOX |
| 81 | 15274120 | TELO COPRISERBATOIO BB | HOPPER COVER-SHEET BB | TOILE COUVRE-TREMIE BB | TRICHTERABDECKTUCH BB | ONA PROTEC. TOLVA BB |
| 82 | 15274100 | TUBO TELO COPRISERBATOIO | HOPPER COVER-SHEET TUBE | TUBE TOILE COUVRE-TREMIE | ROHR TRICHTERABDECKTUCH | TUBO ONA PROTEC. TOLVA |
| 83 | 15274090 | ASTA FISSAGGIO TELO | FIXING ROD | TIGE DE FIXATION | BEFESTIGUNGSTANGE | VARILLA DE FIJACIN |
| 84 | 13722250 | TUBO RINFORZO TELO COPRISEME | REINFORCEMENT TUBE | TUBE DE RENFORCEMENT | VERSTZRKUNGROHR | TUBO DE REFUERZO |

# TAV. 66/163

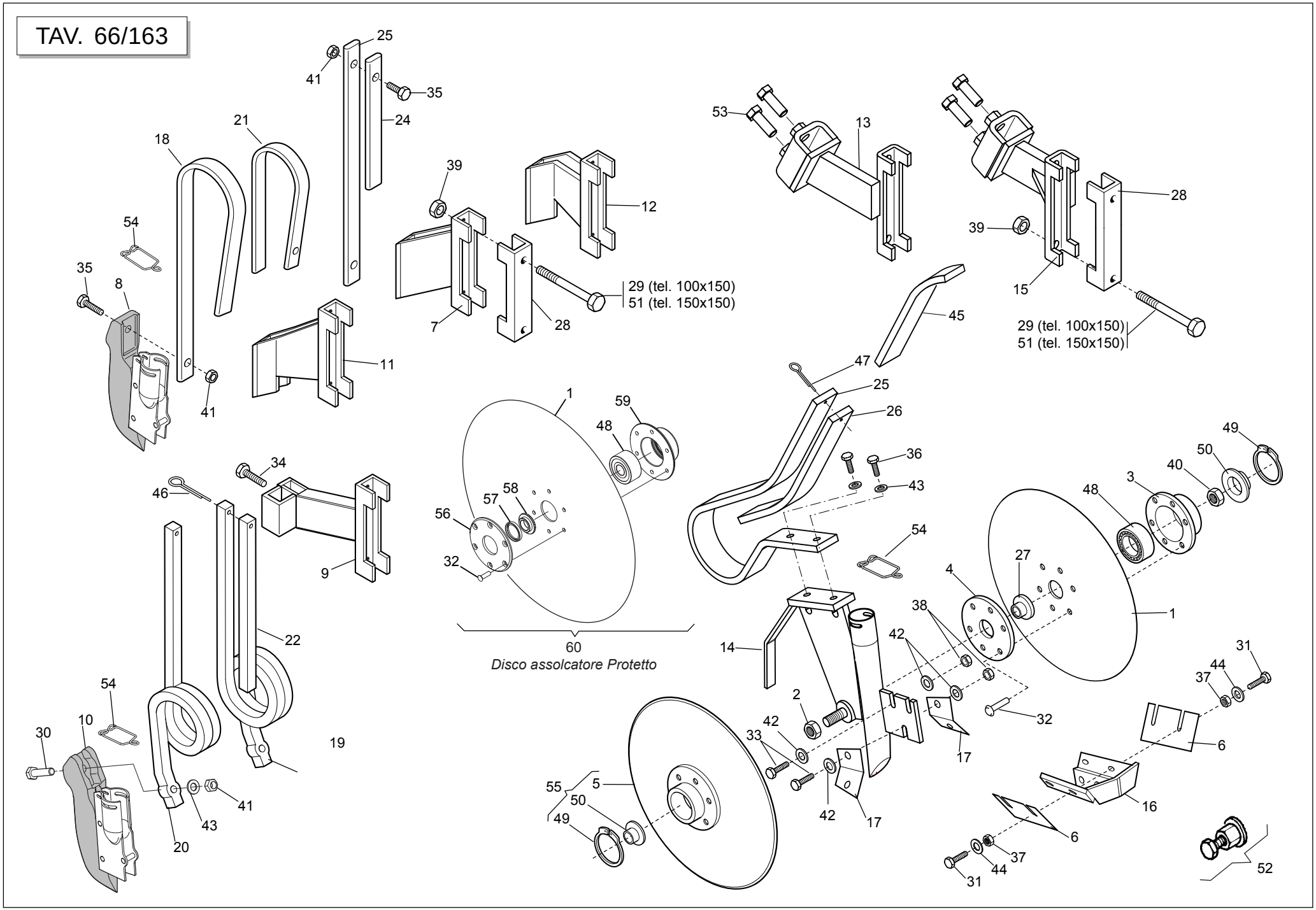




GASPARDO

## *ELEMENTI DI CONCIMAZIONE*

TAV. 66/163

| Pos. | Cod. | Descrizione | Description | Description | Benennung | Descripcion |
|---|---|---|---|---|---|---|
| 1 | 13825091 | DISCO ASSOLCATORE D.373 | FURROW OPENER DISK D.373 | DISQUE D. 373 6 T.D.6 | SCHEIBE SZSCHARENREISSER D.373 | DISCO SURCADOR D.373 |
| 2 | 15220540 | DADO M16X1,5 SX | NUT M16X1-5 LEFT | ECROU M16X1-5 GCH | MUTTER M16X1-5 LI | TUERCA M16X1-5 IZQ |
| 3 | 15223651 | SUPPORTO CUSCINETTO DISCO | DISK BEARING SUPPORT | SUPPORT PALIER DISQUE | SCHEIBENLAGERBsCHSE | SOPORTE COJINETE DISCO |
| 4 | 15421761 | FLANGIA INTERNA DISCO | INNER DISK FLANGE | BRIDE INT. DISQUE | INNENFLANSCH SCHEIBE | BRIDA INTERIOR DISCO |
| 5 | 22505054 | DISCO D.370 MT-600 | TOOTHED DISK D.370 MT-600 | DISQUE D370 MT A/MOY-ROUL | SCHEIBE D.370 MT-600 | DISCO D.370 MT-600 |
| 6 | 15422230 | RASCHIATERRA DISCO | DISK SOIL-SCRAPER | RACLEUR DISQUE | ERDSCHABER SCHEIBE | RASCADOR DISCO |
| 7 | 15470232 | SUPPORTO MOLLA PIATTA 150 | FLAT SPRING SUPPORT 150 | SUPPORT RESSORT PLAT 150 | HALTERUNG FLACHFEDER 150 | SOPORTE MUELLE PLANO 150 |
| 8 | 16670610 | FALCIONE ELEM.CONCIMAZ.PIATTA | FLAT FERTILIZATION COULTER ELE | SOC +LEM. FERTILIS. RESSORT PL | S-SCHAR ELEM.D_NGUNG FLACHFEDE | BOTA ELEM.ABONAD. MUELLE PLANO |
| 9 | 15470913 | SUPPORTO MOLLA QUADRA DOPPIA | SQUARE SPRING SUPPORT | SUPPORT RESSORT CARRE | HALTERUNG VIERKANTFEDER | SOPORTE MUELLE CUADRADO |
| 10 | 16670600 | FALCIONE ELEM.CONCIMAZ.QUADRA | BASIC SQUARE FERTILIZATION COU | SOC +LEM. FERTILIS. RESSORT CA | S-SCHAR ELEM.D_NGUNG QUADR.FED | BOTA ELEM.ABONAD.MUELLE CUADRA |
| 11 | 15471661 | SUPPORTO MOLLA PIATTA DX 150 | FLAT SPRING SUPPORT R.T 150 | SUPPORT RESSORT PLAT DROIT 150 | HALTERUNG FLACHFEDER RE 150 | SOPORTE MUELLE PLANO DCHO 150 |
| 12 | 15471671 | SUPPORTO MOLLA PIATTA SX 150 | FLAT SPRING SUPPORT L.T 150 | SUPPORT RESSORT PLAT GAUCHE 15 | HALTERUNG FLACHFEDER LI 150 | SOPORTE MUELLE PLANO IZQDO 150 |
| 13 | 16670470 | SUPPORTO MOLLA SX DISCHI CONC. | LEFT SPRING SUPPORT FOR FERT. | SUPPORT RESSORT GAUCHE DISQUES | HALTERUNG FEDER LINKS D_NGERSC | SOPORTE MUELLE IZDO. DISC. CON |
| 14 | 16670270 | SUPPORTO DISCHI CONCIMAZIONE | FERTILIZATION DISC SUPPORT | SUPPORT DISQUES FERTILISATION | HALTERUNG D_NGUNGSSCHEIBEN | SOPORTE DISCOS ABONO |
| 15 | 16670430 | SUPPORTO MOLLA DX DISCHI CONC. | RIGHT MANURE DISKS SPRING SUPP | SUPP. RESSORT DRT DISQUES FUM. | HALTERUNG FEDER RE DsNGUNGSSCH | SOPORTE MUELLE DER DISCOS ABON |
| 16 | 15472290 | SUPPORTO RASCHIAT.DISCHI CONC. | MANURE DISKS SOIL SCRAPER SUPP | SUPP. RACLEUR DISQUES FUMAGE | HALTER. ERDSCHABER DsNGUNGSSCH | SOPORTE RASCADOR DISCOS ABONO |
| 17 | 15472300 | RASCHIATERRA INTERNO DISCHI | SOIL SCRAPER INNER DISKS | RACLEUR INTERNE DISQUES | INT. ERDSCHABER SCHEIBEN | RASCADOR TIERRA INTERIOR DISCO |
| 18 | 18901092 | GAMBO CONCIMAZ.MOLLA PIATTA SP | FLAT SPRING MANURING LEG SP | TIGE FUMAGE RESSORT PLAT SP | SCHAFT DsNGUNG FLACHE FEDER SP | VæSTAGO ABONO MUELLE CHATO SP |
| 19 | 18902770 | MOLLA CONCIMAZIONE 20X20 DX | RIGHT MANURING SPRING 20X20 | RESSORT FUMAGE 20X20 DRT | FEDER DsNGUNG 20X20 RE | MUELLE ABONO 20X20 DER |
| 20 | 18902780 | MOLLA CONCIMAZIONE 20X20 SX | LEFT MANURING SPRING 20X20 | RESSORT FUMAGE 20X20 GCH | FEDER DsNGUNG 20X20 LI | MUELLE ABONO 20X20 IZQ |
| 21 | 18902861 | RINF.MOLLA PIATTA CONCIM.SP | MANUR.PLATE SPRING REINFORCE.S | RENF. RESSORT PLAT FUMAGE SP | VERSTZRKUNG FLACHFEDER DsNGUNG | REFUERZO MUELLE ABONO SP |
| 22 | 18903200 | FERMO SPIRALE | SPIRAL STOP | ARRET SPIRALE | FESTSTELLVORRICHTUNG SPIRALE | BLOQUEO ESPIRAL |
| 23 | 18903210 | MOLLA CONCIM.FILE DISPARI | ODD NUMBER ROW MANUR.SPRING | RESS. FUMAGE RANGEES IMPAIRES | FEDER DsNGUNG UNGERADE REIHEN | MUELLE ABONO FILAS IMPARES |
| 24 | 18903220 | RINF.MOLLA CONCIM.FILE DISP. | ODD NUM. ROW MANUR.SPRING REIN | RENF. RESS. FUMAGE RANGEES IMP | VERST. FEDER DsNG. UNGERADE RE | REFUERZO MUELLE ABONO FILAS IM |
| 25 | 18903820 | MOLLA CONCIMAZIONE DISCO | DISC FERTILIZATION SPRING | RESSORT FERTILISATION DISQUE | FEDER D_NGUNG SCHEIBE | MUELLE ABONO DISCO |
| 26 | 18903900 | MOLLA RINF.CONCIMAZIONE DISCO | DISC FERTILIZATION REINF. SPRI | RESSORT RENF. FERTILISATION DI | VERST. FEDER D_NGUNG SCHEIBE | MUELLE REF. ABONO DISCO |
| 27 | 13825081 | BOCCOLA PARAPOLVERE DISCO | DISC DUST SEAL BUSH | DOUILLE PARE-POUSSI+RE DISQUE | BUCHSE STAUBABDECKUNG SCHEIBE | MANGUITO GUARDAPOLVO DISCO |
| 28 | 15110091 | SCONTRO A U | STRIKER | BRIDE 150 MM | ANSCHLAG | ELEMENTO DE EMPALME |
| 29 | 41601101 | VITE 14 X160 5737 8.G | BOLT M 14 X160 5737 8.G | VIS M 14 X160 5737 8.G | SCHRAUBE M 14 X160 5737 8.G | TORNILLO M 14 X160 5737 8.G |
| 30 | F01020156 | VITE 12X50 5737 8.G ZN | BOLT12X50 5737 8.G GALVANIZED | VIS 12X50 5737 8.G ZN | SCHRAUBE 12X50 5737 8.G ZN | TORNILLO 12X50 5737 8.G ZN |
| 31 | F01020403 | VITE 6 X16 5739 8.G ZN | BOLT 6X16 5739 8.G GALVANIZED | VIS 6X16 5739 8.G ZN | SCHRAUBE 6X16 5739 8.G ZN | TORNILLO 6X16 5739 8.G ZN |
| 32 | F02250521 | RIBATTINO TSC 6X19,8 A/2 | RIVET TSC 6X19,8 A/2 | RIVET TSC 6X19,8 A/2 | NIETE TSC 6X19,8 A/2 | REMACHE TSC 6X19,8 A/2 |
| 33 | F01020476 | VITE 10X30 5739 8.G ZN | BOLT 10X30 5739 8.G GALVANIZED | VIS 10X30 5739 8.G ZN | SCHRAUBE 10X30 5739 8.G ZN | TORNILLO 10X30 5739 8.G ZN |
| 34 | F01020508 | VITE 12X25 5739 8.G ZN | SCREW 12X25 5739 8.G GALVANIZ. | VIS 12X25 5739 8.G ZN | SCHRAUBE 12X25 5739 8.G ZN | TORNILLO 12X25 5739 8.G ZN |
| 35 | F01020512 | VITE 12X35 5739 8.G ZN | BOLT 12X35 5739 8.G GALVANIZED | VIS 12X35 5739 8.G ZN | SCHRAUBE 12X35 5739 8.G ZN | TORNILLO 12X35 5739 8.G ZN |
| 36 | F01020514 | VITE 12X40 5739 8.G ZN | BOLT 12X40 5739 8.G GALVANIZED | VIS 12X40 5739 8.G ZN | SCHRAUBE 12X40 5739 8.G ZN | TORNILLO 12X40 5739 8.G ZN |
| 37 | F01200232 | DADO 6 5588 6.8 ZN | NUT 6 UNI 5588 6.8 GALVANIZED | ECROU 6 UNI 5588 6.8 ZN | MUTTER 6 UNI 5588 6.8 ZN | TUERCA 6 UNI 5588 6.8 ZN |
| 38 | F01200270 | DADO 10 5588 6.8 ZN | SCREW 10 UNI 5588 6.8 GALVANIZ | ECROU 10 UNI 5588 6.8 ZN | MUTTER 10 UNI 5588 6.8 ZN | TUERCA 10 UNI 5588 6.8 ZN |
| 39 | F01200306 | DADO 14 5588 6.8 ZN | NUT 14 UNI 5588 6.8 GALVANIZED | ECROU 14 UNI 5588 6.8 ZN | MUTTER 14 UNI 5588 6.8 ZN | TUERCA 14 UNI 5588 6.8 ZN |
| 40 | F01200442 | DADO 16X1,5 5589 6.8 ZN | NUT 16X1-5 UNI 5589 6.8 GALVAN | ECROU 16X1-5 UNI 5589 6.8 ZN | MUTTER 16X1-5 UNI 5589 6.8 ZN | TUERCA 16X1-5 UNI 5589 6.8 ZN |
| 41 | F01220244 | DADO TRISTOP M12 | NUT- TRISTOP M12 | ECROU TRISTOP M12 | MUTTER TRISTOP M12 | TUERCA TRISTOP M12 |
| 42 | F01410064 | RONDELLA D10 UNI 6592 ZN | WASHER D10 UNI 6592 GALVANIZED | RONDELLE D10 UNI 6592 ZN | UNTERLEGSCHEIBE D10 UNI 6592 Z | ARANDELA D10 UNI 6592 ZN |
| 43 | F01410076 | RONDELLA D12 UNI 6592 ZN | WASHER D12 UNI 6592 ZN | RONDELLE D12 UNI 6592 ZN | UNTERLEGSCHEIBE D12 UNI 6592 Z | ARANDELA D12 UNI 6592 ZN |
| 44 | F01420036 | ROND.PIANA 6,6X 18X2 6593 ZN | FLAT WASHER 6-6X 18X2 6593 ZN | ROND. PLATE 6-6X 18X2 6593 ZN | SCHEIBE 6-6X 18X2 6593 ZN | ARAND. PLANA 6-6X 18X2 6593 ZN |
| 45 | 16670630 | SPESSORE MOLLA DISCHI CONCIM. | SHIMS | CALE | ZWISCHENLEGSCHEIBE | ESPACIADOR |
| 46 | F02200229 | COPIGLIA 5 X45 1336 ZN | SPLIT PIN 5 X45 1336 GALVAN. | GOUPILLE 5 X45 1336 ZN | SPLINT 5 X45 1336 ZN | PASADOR 5 X45 1336 ZN |
| 47 | F02200228 | COPIGLIA 5 X35 1336 ZN | SPLIT PIN 5 X35 1336 GALVAN. | GOUPILLE 5 X35 1336 ZN | SPLINT 5 X35 1336 ZN | PASADOR 5 X35 1336 ZN |
| 48 | F04010084 | CUSCINETTO 3303 2RS | BEARING 3303 2RS | PALIER 3303 2RS | LAGER 3303 2RS | COJINETE 3303 2RS |
| 49 | F02050631 | ANELLO ARR.47 UNI 7437-75 | STOP RING 47 UNI 7437-75 | BAGUE ARRET 47 UNI 7437-75 | RING 47 UNI 7437-75 | ANILLO PARADA 47 UNI 7437-75 |
| 50 | 66248248 | TAPPO IN PLASTICA | PLASTIC PLUG | BOUCHON EN PLASTIQUE | PLASTIKPFROPFEN | TAPN DE PLæSTICO D |
| 51 | 41602124 | VITE 14X220 5737 8.G ZN | BOLT 14X220 5737 8.G GALVANIZ. | VIS 14X220 5737 8.G ZN | SCHRAUBE 14X220 5737 8.G ZN | TORNILLO 14X220 5737 8.G ZN |
| 52 | 15225240 | ESTRATTORE DISCHI ELEMENTO MT | SEED PLATE EXTRACTOR ELEM. MT | EXTRACTEUR DISQUE ELEMENT MT | SCHEIBENAUSZIEHER ELEMENT MT | EXTRACTOR DISCOS ELEMENTO MT |
| 53 | F01020568 | VITE 16X45 5739 8.G ZN | BOLT 16X45 5739 8.G GALVANIZ. | VIS 16X45 5739 8.G ZN | SCHRAUBE 16X45 5739 8.G ZN | TORNILLO 16X45 5739 8.G ZN |
| 54 | 18903911 | MOLLA FERMO TUBO D.35 | PIPE LOCK SPRING D.35 | RESSORT ARR-T TUBE D.35 | ROHRSPERRFEDER D.35 | MUELLE TOPE TUBO D. 35 |
| 55 | 22505131 | DISCO ASSOLC.COMPL.MT | FURROW OPENER DISK ASSY. | DISQUE D370 MT A/MOY-ROUL-BOUC | SCHEIBE SZSCHARENREISSER KOMPL | DISCO SURCADOR COMPL.MT |
| 56 | 15225480 | FLANGIA INT.DISCO PROTTETTO ZN | INNER DISK FLANGE | BRIDE INT. DISQUE | INNENFLANSCH SCHEIBE | BRIDA INTERIOR DISCO |
| 57 | F03011075 | ANELLO DI TENUTA G24X32X4 | SEALING RING G24X32X4 | BAGUE D'ETANCHEITE G24X32X4 | DICHTRING G24X32X4 | ANILLO AISLADOR G24X32X4 |
| 58 | 15225490 | BOCCOLA PARAP.DISCO PROTETTO | BUSHING PARAP.DISCO PROTETTO | BOITE PARAP.DISCO PROTETTO | BUCHSE PARAP.DISCO PROTETTO | MANGUITO PARAP.DISCO PROTETTO |
| 59 | 15223651 | SUPPORTO CUSCINETTO DISCO | DISK BEARING SUPPORT | SUPPORT PALIER DISQUE | SCHEIBENLAGERBsCHSE | SOPORTE COJINETE DISCO |
| 60 | 15225500 | DISCO ASSOLC.PROTETTO COMPL. | COMPL. PROTECTED DISC COULTER | DISQUE DU SOC PROT+G+ COMPLET | GESCH_TZTE FURCHENFORMSCHEIBE | DISCO SURC.PROTEGIDO COMPL. |

TAV. 66/203

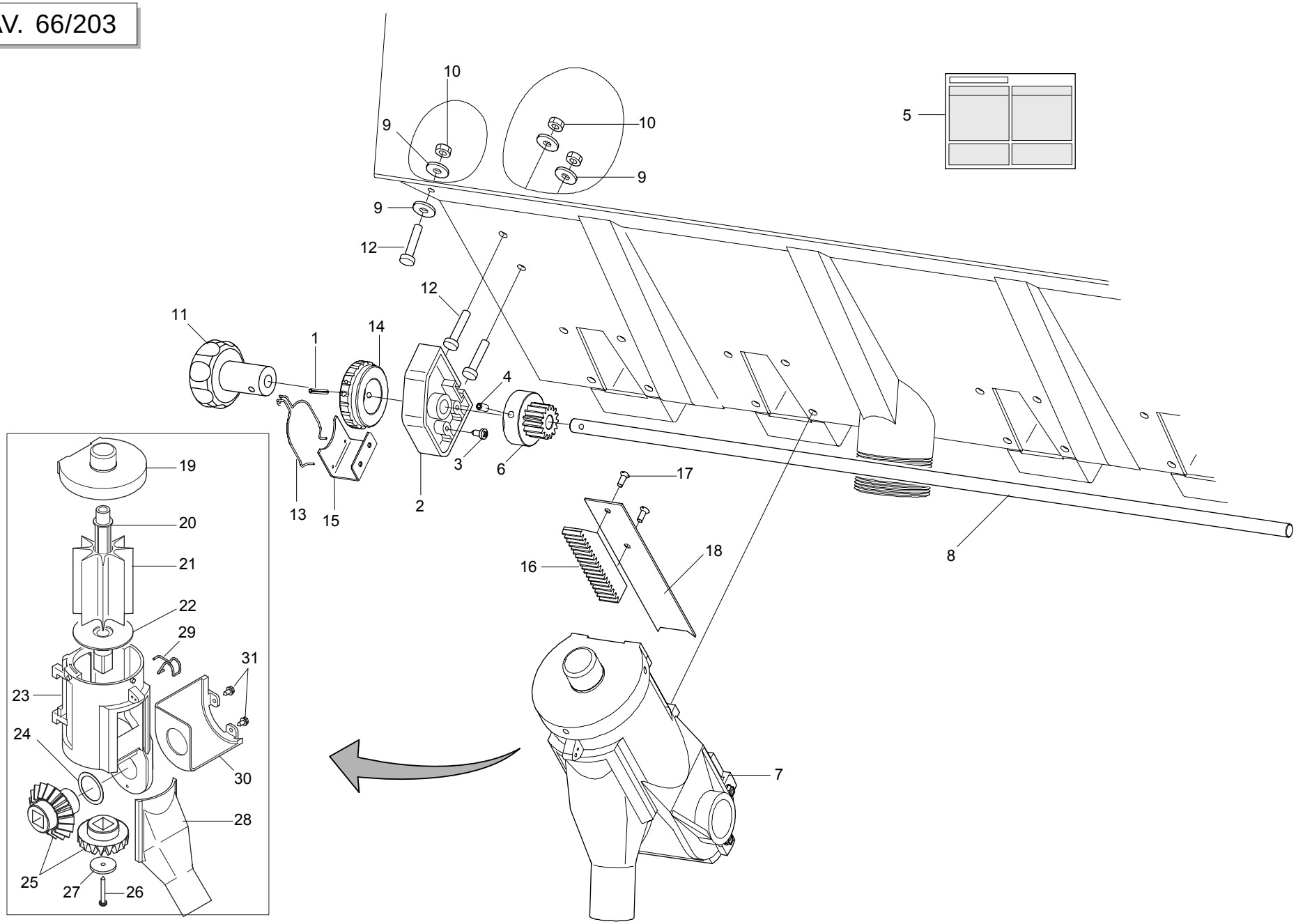




GASPARDO

## *SPEEDY SET*

TAV. 66/203

| Pos. | Cod. | Descrizione | Description | Description | Benennung | Descripcion |
|---|---|---|---|---|---|---|
| 1 | F02100066 | SPINA EL.4 X36 DIN 1481 | PIN EL. 4X36 DIN 1481 | GOUPILLE EL.4 X36 DIN 1481 | SPANNSTIFT 4X36 DIN 1481 | CLAVIJA EL.4 X36 DIN 1481 |
| 2 | 19003660 | SUPPORTO | SUPPORT | SUPPORT | HALTERUNG | SOPORTE |
| 3 | F01070061 | VITE 3,9X9,5 DIN 7981 | BOLT 3-9X 9-5 DIN 7981 | VIS 3-9X 9-5 DIN 7981 | SCHRAUBE 3-9X 9-5 DIN 7981 | TORNILLO 3-9X 9-5 DIN 7981 |
| 4 | F01050083 | GRANO 5 X12 5927 INOX | INOX GRUB-SCREW 5 X12 5927 | GOUJON 5 X12 5927 INOX | STIFT 5 X12 5927 INOX | TORNILLO SIN CABEZA 5 X12 5927 |
| 5 | 19702951 | DECAL.TAB.DISTRIB.SPEEDY-SET | SPEEDY-SET DISTRIB. CHART STI | DECALC.TABLEAU DISTRIB. SPE.-S | ABZIEHB. TAB.APPARAT SPEEDY-SE | CAL.TABLA DISTRIB. SPEEDY-SET |
| 6 | 19003680 | INGRANAGGIO Z.15 | GEAR Z 15 | ENGRENAGE Z 15 | ZAHNRAD Z 15 | ENGRANAJE Z 15 |
| 7 | 16670040 | DISTR.COMPL.8PALE SPEEDY SET P | COMPL.PLA.SPEEDY SET DISTR.8R | MINIMAX COMPL 8C PLA SPEEDYSET | KOMPL.DOSIER.SPEEDY SET PLA.8S | DISTR.COMP.SPEEDY SET PLA.8AL. |
| 7 | 13722330 | DISTR.COMPL.8PALE SPEEDY SET F | COMPL.SPEEDY 8-BLADE DISTR. SE | DISTR.COMPL.8PALETTES SPEEDY S | SAATGUTAUS.8SCH.KOMPL.SPEEDY S | DISTR.COMPL.8PALETAS SPEEDY SE |
| 8 | 16670320 | TONDO D.10X780 | D.10X780 ROUND | ROND D.10X780 | RUNDEISEN D.10X780 | BARRA REDONDA D. 10X780 |
| 8 | 16670330 | TONDO D.10X1030 | D.10X1030 ROUND | ROND D.10X1030 | RUNDEISEN D.10X1030 | BARRA REDONDA D. 10X1030 |
| 8 | 16670340 | TONDO D.10X1230 | D.10X1230 ROUND | ROND D.10X1230 | RUNDEISEN D.10X1230 | BARRA REDONDA D. 10X1230 |
| 8 | 16670350 | TONDO D.10X1430 | D.10X1430 ROUND | ROND D.10X1430 | RUNDEISEN D.10X1430 | BARRA REDONDA D. 10X1430 |
| 9 | F01420038 | ROSETTA M6 6,4X18X2 U6593 IX | WASHER M6 6,4X18X2 U6593 IX | RONDELLE M6 6,4X18X2 U6593 IX | SCHEIBE M6 6,4X18X2 U6593 IX | ARANDELA M6 6,4X18X2 U6593 IX |
| 10 | F01200233 | DADO M 6X 1 U5588 IX | NUT M 6X 1 U5588 IX | ECROU M 6X 1 U5588 I | MUTTER M 6X 1 U5588 | TUERCA M 6X 1 U5588 |
| 11 | 19003670 | MANOPOLA SPEEDY SET | SPEEDY HANDLE SET | POIGN+E SPEEDY SET | GRIFF SPEEDY SET | EMPUÐADURA SPEEDY SET |
| 12 | F01020419 | VITE M6 X1 X 16 U5739 8.8 IX | BOLT M6 X1 X 16 U5739 8.8 IX | VIS M6 X1 X 16 U5739 8.8 IX | SCHRAUBE M6 X1 X 16 U5739 8. | TORNIL. M6 X1 X 16 U5739 8.8 |
| 13 | 65336055 | MOLLA SPEC.REGOL.SPAND. SP | SPEC SPRING MAN. SPR. ADJUSTM. | RESSORT SPEC. REGL. EP. ENTRAI | SPEZIALFEDER STREUEREINSTELLUN | MUELLE ESPEC. REGUL. ABONADORA |
| 14 | 19003710 | GHIERA REGOLAZIONE DX | RIGHT ADJUSTMENT KNURLED | BAGUE REGLAGE DROITE | EINSTELLMUTTER RE | CONTRATUERCA REGULACIN DER. |
| 15 | 16670140 | SUPPORTO MOLLA REGOLATORE | REGULATOR SPRING SUPPORT | SUPPORT RESSORT R+GULATEUR | HALTERUNG EINSTELLFEDER | SOPORTE MUELLE REGULADOR |
| 16 | 19003690 | CREMAGLIERA | RACK | CR+MAILL+RE | ZAHNSTANGE | CREMALLERA |
| 17 | F01080055 | VITE 4X10 6109 INOX A2 | SCREW 4X10 6109 INOX A2 | VIS 4X10 6109 INOX A2 | SCHRAUBE 4X10 6109 INOX A2 | TORNILLO 4X10 6109 INOX A2 |
| 18 | 16670100 | REGOLATORE APERTURA | OPENING REGULATOR | REGULATEUR OUVERTURE | TFFNUNGSEINSTELLER | REGULADOR ABERTURA |
| 19 | 19003700 | COPERCHIO SPEEDY SET | COVER SPEEDY SET | COUVERCLE SPEEDY SET | DECKEL SPEEDY SET | TAPA SPEEDY SET |
| 20 | 66248173 | ASSE DISTR.SPAND. SP | MANURE SPREADER DISTR. SPINDLE | AXE DISTRIBUTEUR EP.ENGRAIS SP | ACHSE SZAPPARAT STREUER SP | EJE DISTR. ABON. SP |
| 21 | 66248172 | DOSATORE DISTR.SPAND. SP | MAN.SPR. SEED METERING DEVICE | DOSEUR DISTRIBUTEUR EP. ENGRAI | DOSIERER DsNGERSTREUER. SP | DOSIFICADOR DISTR.ABON. SP |
| 22 | 66248211 | PERNO RONDELLA FUSA SPAND. SP | MAN. SPR. CAST WASHER PIN. SP | PIVOT RONDELLE MOULEE EP. ENGR | ZAPFEN LOSE UNTERLEGSCHEIBE ST | PERNO ARANDELA FUNDIDA ABONAD |
| 23 | 19002920 | CORPO DISTRIBUTORE SPANDI PLA. | PLA. F.SPREADER DISTRIB.CASING | CORPS DISTRIBUTEUR EPAND. | VERTEILUNGSKTRPER STREUER PLA. | CUERPO DIST. ABONADORA PLæS. |
| 24 | 18701500 | RONDELLA 29,5 X38 X0,3 | WASHER 29,5 X 38 X 0,3 | RONDELLE 29,5 X38 X0,3 | UNTERLEGSCHEIBE 29,5X38X0,3 | ARANDELA 29,5 X38 X0,3 |
| 25 | 20860126 | KIT INGR DISTR CONCIME (2+2) | KIT- MAN. DISTR. GEARS | COUPLE CON DISTR ENGRAIS (2+2) | KIT ZAHNRZDER DsNGERSTREUER | SET ENGRANAJES DISTRIB. ABONO |
| 26 | F01070075 | VITE 4,2X38 DIN 7981 | BOLT 4-2X38 DIN 7981 | VIS 4-2X38 DIN 7981 | SCHRAUBE 4-2X38 DIN 7981 | TORNILLO 4-2X38 DIN 7981 |
| 27 | 20970097 | RONDELLA 32X3X4,5 | WASHER 32X3X4-5 | RONDELLE 32X3X4-5 | UNTERLEGSCHEIBE 32X3X4-5 | ARANDELA 32X3X4-5 |
| 28 | 66248178 | SCIVOLO DISTR.SPAND. SP | CHUTE- MANURE-SPREADER DISTRIB | LANCOIR DISTRIBUTION EP. ENGR. | DsNGERSTREUER RUTSCHE SP | PLANO INCLINADO DISTR. ABON. S |
| 29 | 65336062 | MOLLA SPEC.SCIV.DISTR.SPAND.SP | SPEC SPRING - MAN. SPR. DISTR. | RESS. SPEC. LANCOIR DISTR. EP. | SPEZ.FEDER RUTSCHE SZAPP. STRE | MUELLE ESPEC.PLANO INCL.DISTR. |
| 30 | 19002850 | PROTEZIONE PIGNONE | PINION GUARD | PROTECTION PIGNON | RITZELSCHUTZ | PROTECCIN PI¾N PR |
| 31 | F01070011 | VITE AUTOF.4,2X9,5T.E.TAG.F.RO | BOLT- SELF-TAPPING 4-2X9-5T.E. | VIS AUTOTAR. 4-2X9-5 T. E. COU | SELBSTSCHNEID. SCHRAUBE 4-2X9- | TORNILLO AUTORROSC. 4-2X9-5 |

TAV. 66/191

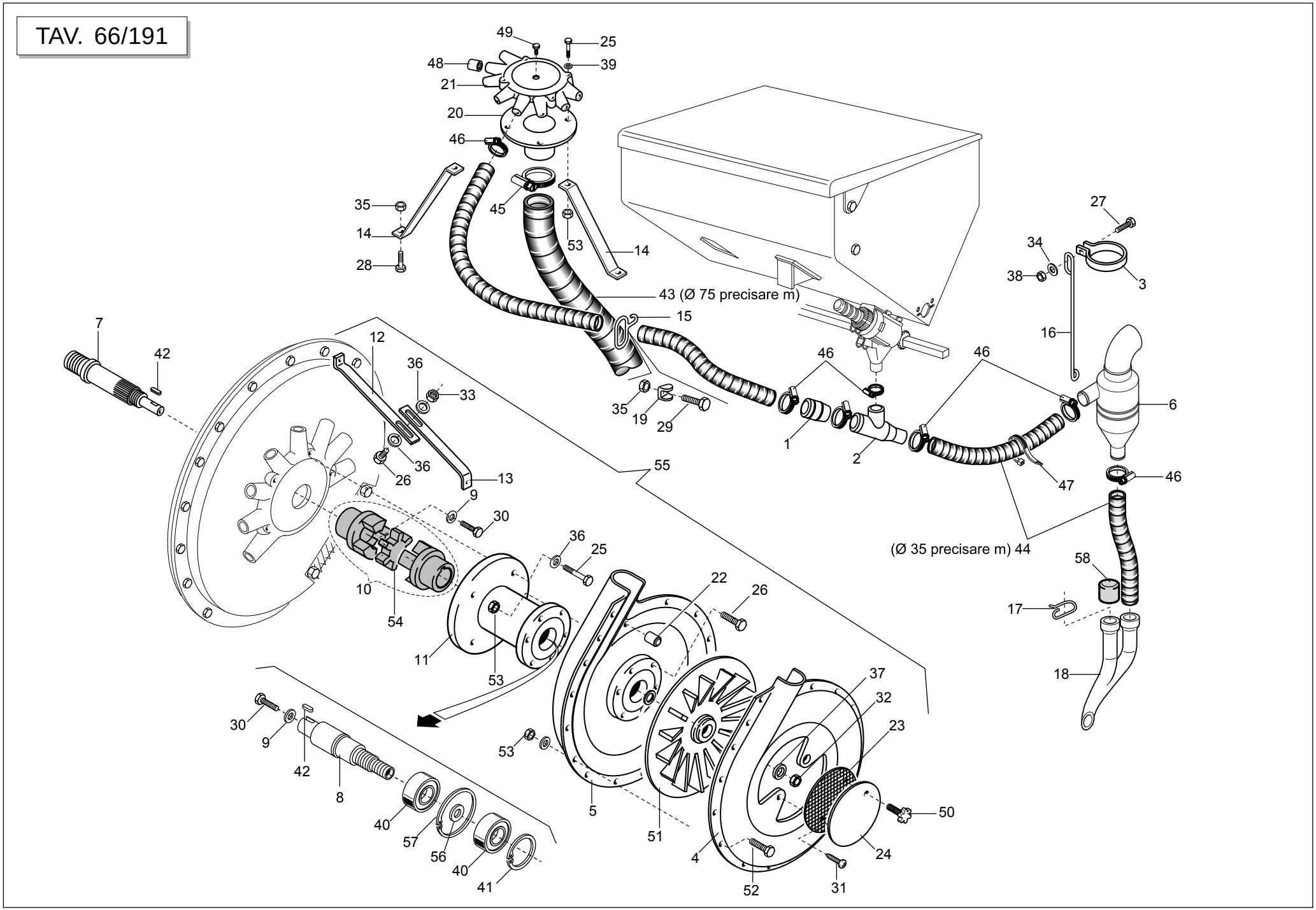




GASPARDO

## *CONCIMAZIONE PNEUMATICA*

TAV. 66/191

| Pos. | Cod. | Descrizione | Description | Description | Benennung | Descripcion |
|---|---|---|---|---|---|---|
| 1 | 13912101 | UGELLO CONCIMAZIONE PNEUMATICA | PNEUMATIC FERTIL. NOZZLE | BUSE FUMAGE PNEUMATIQUE | DsSE PNEUMATISCHE DsNGUNG | BOQUILLA DE ABONO NEUMATICA |
| 2 | 13912131 | TUBO CONCIMAZIONE PNEUMATICA | PIPE PNEUMATIC FERTILISATION | TUBE FUMAGE PNEUMATIQUE | ROHR PNEUMATISCHE DsNGUNG | TUBO DE ABONO NEUMAT. |
| 3 | 13912350 | FASCETTA VASO ESPANSIONE | EXPANSION CHAMBER CLAMP | COLLIER VASE EXPANSION | SCHELLE EXPANSIONSGEFZSS | ABRAZADERA DEPSITO DE EXPANSIF |
| 4 | 13912460 | COPRIVENTOLA LATO SCHIENALE | BACK FAN PROTECTION | PROTECTION ROTOR DOSSIER | RUECKENLAUFRADSCHUTZ | PROTECCIN VENTILADOR RESPALDOA |
| 5 | 13912470 | COPRIVENTOLA LATO MOTORE | MOTOR FAN PROTECTION | PROTECTION ROTOR MOTEUR | MOTORLAUFRADSCHUTZ | PROTECCIN VENTILADOR MOTOR A |
| 6 | 13912512 | VASO ESPANSORE D.35-50 | D.35-50 EXPANSION TANK | VASE EXPANSION D.35-50 | EXPANSIONSGEFZSS D.35-50 | DEPSITO DE EXPANSIN D.35-50 |
| 7 | 15450390 | PULEGGIA CONDOTTA | DRIVEN PULLEY D.28 | POULIE ENTRAINEE D. 28 | GETRIEBENE SCHEIBE D.28 | POLEA CONDUCIDA D.28 |
| 8 | 15450400 | PULEGGIA CONCIMAZ.PNEUMATICA | DRIVEN PULLEY | POULIE ENTRAINEE | GETRIEBENE SCHEIBE | POLEA CONDUCIDA |
| 9 | 15450410 | RONDELLA X GIUNTO ELASTICO | LOCK WASHER | RONDELLE DE BLOCAGE | SPERRSCHEIBE | ARANDELA DE BLOQUEO |
| 10 | 15450420 | GIUNTO ELASTICO LAVORATO | LOCK COUPLING | JOINT DE BLOCAGE | SPERRKUPPLUNG | JUNTA DE BLOQUEO |
| 11 | 15450431 | FLANGIA SUPP.CONC.PNEUM. | FLANGE SUPPORT | BRIDE SUPPORT | LAGERFLANSCH | BRIDA DE SOPORTE |
| 12 | 15470410 | RINFORZO ANTERIORE | FRONT REINFORCEMENT | RENFORCEMENT AVANT | VORDERE VERSTZRKUNG | REFUERZO DELANTERO |
| 13 | 15470420 | RINFORZO POSTERIORE | REAR REINFORCEMENT | RENFORCEMENT ARRIERE | HINTERE VERSTZRKUNG | REFUERZO TRASERO |
| 14 | 15471471 | SUPPORTO CONVOGLIATORE | CONVEYOR SUPPORT | SUPPORT CONVOYEUR | HALTERUNG FTRDERER | SOPORTE TRANSPORTADOR |
| 15 | 18901960 | GUIDATUBI PER 3 TUBI | PIPE GUIDE FOR 3 PIPES | GUIDE-TUBES POUR 3 TUBES | ROHRFsHRUNG FsR 3 ROHRE | GUA TUBOS PARA 3 TUBOS G |
| 16 | 18902650 | MOLLA SUPP.VASO ESPANSIONE | EXPANSION TANK SUPPORT SPRING | RESSORT SUPP. VAS EXPANSION | OB. FEDER EXPANSIONSGEFZSS | MUELLE SOP. DEPSITO DE EXPANSA |
| 17 | 18903180 | MOLLA CONVOGLIATORE MICRO | MICRO CONVEYOR SPRING | RESSORT CONVOYEUR MICRO | FEDER MIKRO FTRDERER | MUELLE CONDUCTOR MICRO |
| 18 | 19002580 | RACCORDO FINALE CONCIMAZ.PNEUM | PNEUMAT. MAN. SPR. END UNION | RACCORD FINAL FUMAGE PNEUMAT. | ENDANSCHLUSS PNEUM. DsNGUNG | UNIN FINAL DE ABONAD. NEUMAT.R |
| 19 | 22230264 | RONDELLA TUBI DEPR. | AIR PUMP PIPE WASHER | RONDELLE TUBES DISPOSITIF DE D | UNTERLEGSCHEIBE VAKUUMPUMPENRO | ARANDELA TUBOS BOMBA VACO. S |
| 20 | 23440551 | FLANGIA CONVOGLIATORE HL/ID | CONVEYOR FLANGE HL/ID | BRIDE CONVOYEUR HL/ID | FLANSCH FTRDERER HL/ID | BRIDA CONDUCTOR HL/ID |
| 21 | 23440553 | CONVOGLIATORE D.35 HL/ID | CONVEYOR- D.35 HL/ID | CONVOYEUR D. 35 HL/ID | FTRDERER D.35 HL/ID | CONDUCTOR D.35 HL/ID |
| 22 | 23440562 | DISTANZ.GUSCI SOFFIANTE HL/ID | BLOWER SHELL SPACER HL/ID | ENTRETOISE COQUES SOUFFLANTE H | DISTANZSTsCK SCHALEN GELBZSE H | DISTANC. CASCARAS SOPLAD. HL/I |
| 23 | 23440563 | GRIGLIA DI PROTEZIONE HL/ID | PROTECT. GRID HL/ID | GRILLE DE PROTECTION HL/ID | SCHUTZGITTER HL/ID | REJILLA DE PROTECCIN HL/ID G |
| 24 | 23440564 | COPERCHIO CHIUSURA SOFF. HL/ID | BLOWER CLOSING COVER . HL/ID | COUVERCLE FERMETURE SOUFFL. HL | ABSCHLUSSDECKEL GEBL. HL/ID | TAPA CIERRE SOPL. HL/ID |
| 25 | F01020048 | VITE 6 X75 5737 8.G ZN | BOLT 6 X75 5737 8.G GALVANIZ. | VIS 6 X75 5737 8.G ZN | SCHRAUBE 6 X75 5737 8.G ZN | TORNILLO 6x75 5737 8.G ZN |
| 26 | F01020404 | VITE 6 X20 5739 8.G ZN | BOLT 6X20 5739 8.G GALVANIZED | VIS 6X20 5739 8.G ZN | SCHRAUBE 6X20 5739 8.G ZN | TORNILLO 6X20 5739 8.G ZN |
| 27 | F01020445 | VITE 8 X30 5739 8.G ZN | BOLT 8X30 5739 8.G GALVANIZED | VIS 8X30 5739 8.G ZN | SCHRAUBE 8X30 5739 8.G ZN | TORNILLO 8X30 5739 8.G ZN |
| 28 | F01020472 | VITE 10X25 5739 8.G ZN | BOLT 10X25 5739 8.G GALVANIZED | VIS 10X25 5739 8.G ZN | SCHRAUBE 10X25 5739 8.G ZN | TORNILLO 10X25 5739 8.G ZN |
| 29 | F01020476 | VITE 10X30 5739 8.G ZN | BOLT 10X30 5739 8.G GALVANIZED | VIS 10X30 5739 8.G ZN | SCHRAUBE 10X30 5739 8.G ZN | TORNILLO 10X30 5739 8.G ZN |
| 30 | F01030054 | VITE 8X16 5933 | BOLT 8X16 UNI5933 10.9 GALVANI | VIS 8X16 UNI 5933 10.9 ZN | SCHRAUBE 8X16 UNI 5933 10.9 ZN | TORNILLO 8X16 UNI 5933 10.9 ZN |
| 31 | F01080044 | VITE 5 X14 7688 ZN | BOLT 5 X14 7688 GALVANIZED | VIS 5 X14 7688 ZN | SCHRAUBE 5 X14 7688 ZN | TORNILLO 5 X14 7688 ZN |
| 32 | F01230046 | DADO AUTOB.NOR.10 ZN | NORM.SELF-LOCKING NUT 10 GALVA | ECROU AUTOB.NOR.10 ZN | SELBSTSP. MUTTER NOR. 10 ZN | TUERCA AUTOB. NOR. 10 ZN |
| 33 | F01200232 | DADO 6 5588 6.8 ZN | NUT 6 UNI 5588 6.8 GALVANIZED | ECROU 6 UNI 5588 6.8 ZN | MUTTER 6 UNI 5588 6.8 ZN | TUERCA 6 UNI 5588 6.8 ZN |
| 34 | F01200244 | DADO 8 5588 6.8 ZN | NUT 8 UNI 5588 6.8 GALVANIZED | ECROU 8 UNI 5588 6.8 ZN | MUTTER 8 UNI 5588 6.8 ZN | TUERCA 8 UNI 5588 6.8 ZN |
| 35 | F01200270 | DADO 10 5588 6.8 ZN | SCREW 10 UNI 5588 6.8 GALVANIZ | ECROU 10 UNI 5588 6.8 ZN | MUTTER 10 UNI 5588 6.8 ZN | TUERCA 10 UNI 5588 6.8 ZN |
| 36 | F01410037 | RONDELLA D6 UNI 6592 ZN | WASHER D6 UNI 6592 GALVANIZED | RONDELLE D6 UNI 6592 ZN | UNTERLEGSCHEIBE D6 UNI 6592 ZN | ARANDELA D6 UNI 6592 ZN |
| 37 | F01410064 | RONDELLA D10 UNI 6592 ZN | WASHER D10 UNI 6592 GALVANIZED | RONDELLE D10 UNI 6592 ZN | UNTERLEGSCHEIBE D10 UNI 6592 Z | ARANDELA D10 UNI 6592 ZN |
| 38 | F01420048 | ROND.PIANA 9X 24X2 6593 ZN | FLAT WASHER 9X 24X2 6593 GALV. | ROND. PLATE 9X 24X2 6593 ZN | SCHEIBE 9X 24X2 6593 ZN | ARAND. PLANA 9X 24X2 6593 ZN |
| 39 | F01430047 | RONDELLA D6 DIN 6798 D.INT.ZN | WASHER D6 DIN 6798 D.INT.GALV. | RONDELLE D6 DIN 6798 D. INT. Z | UNT. SCHEIBE D6 DIN 6798 D. IN | ARANDELA D6 DIN 6798 D.INT.ZN |
| 40 | F04010165 | CUSCINETTO 6204 2RS C3 | BEARING 6204 2RS | PALIER 6204 2RS | LAGER 6204 2RS | COJINETE 6204 2RS |
| 41 | F02050609 | ANELLO ARR.20 UNI 7435-75 | STOP RING 20 UNI 7435-75 | BAGUE ARRET 20 UNI 7435-75 | RING 20 UNI 7435-75 | ANILLO PARADA 20 UNI 7435-75 |
| 42 | F02150036 | LINGUETTA 6X6X20 UNI 6604 | TAB 06X6X20 UNI6604 | LANGUETTE 06X6X20 UNI6604 | FEDERKEIL 06X6X20 UNI6604 | LENGsETA 06X6X20 UNI6604 |
| 43 | F03100367 | TUBO FLESSIBILE PVC DI 75 | FLEXIBLE PVC PIPE DI 75 | TUBE FLEXIBLE PVC DI 75 | 75ER SCHLAUCH PVC | TUBO FLEXIBLE PVC DI 75 |
| 44 | F03100500 | TUBO EOLO 35 PU | EOLO PIPE 35 PU | TUBE EOLO 35 PU | ROHR EOLO 35 PU | TUBO EOLO 35 PU |
| 45 | F02300023 | FASCETTA STRINGITUBO 77/95 | PIPE CLAMP 77/95 | COLLIER DE SERRAGE 77/95 | ROHRSCHELLE 77/95 | ABRAZADERA PARA MANGUERA 77/95 |
| 46 | F02300018 | FASCETTA STRINGITUBO 25/40 | PIPE CLAMP 25/40 | COLLIER SERRE-TUBE 25/40 | ROHRSCHELLE 25/40 | ABRAZADERA PARA MANGUERA 25/40 |
| 47 | F05150060 | FASCETTA POLYAMIDE 9X360 31919 | POLYAMIDE FASTENING STRAPS 9X3 | COLLIER POLYAMIDE 9X350 31919 | SCHELLE POLYAMID 9X350 31919 | ABRAZADERA POLIAMIDA 9X350 319 |
| 48 | 66248098 | TAPPO CONVOGLIATORE DEPR. SP | AIR PUMP CONVEYOR PLUG SP | BOUCHON CONVOYEUR TURBINE SP | VAKUUM FTRDERPFROPFEN SP | TAPN CONDUCTOR DEPR. SP D |
| 49 | F03150664 | TAPPO MASCHIO 1/8 ESAGONO | 1/8 MALE HEXAGON. PLUG | BOUCHON MALE 1/8 HEXAGONAL | GEWINDEPFROPFEN 1/8 SECHSKANT | TAPN MACHO 1/8 HEXæGONO D |
| 50 | F06220034 | VOLANTINO M5 X 25 VPA/25 | HANDWHEEL M5 X 25 VPA/25 | VOLANT M5 X 25 VPA/25 | HANDRAD M5 X 25 VPA/25 | VOLANTE M5 X 25 VPA/25 |
| 51 | 67320001 | VENTOLA PLASTICA DISCO L80M8 | PLASTIC FAN- DISK L80M8 | ROTOR PLASTIQUE DISQUE L80M8 | SCHEIBE PLASTIKRAD L80M8 | VENTILADOR PLæSTICO DISCO L80M |
| 52 | F01020037 | VITE 6 X30 5737 8.G ZN | BOLT 6 X30 5737 8.G GALVANIZED | VIS 6 X30 5737 8.G ZN | SCHRAUBE 6 X30 5737 8.G ZN | TORNILLO 6 X30 5737 8.G ZN |
| 52 | F01020362 | VITE 4 X12 5739 8.G ZN | SCREW 4X12 5739 8.G GALVANIZED | VIS 4X12 5739 8.G ZN | SCHRAUBE 4X12 5739 8.G ZN | TORNILLO 4X12 5739 8.G ZN |
| 52 | F01020398 | VITE 6 X12 5739 8.G ZN | BOLT 6X12 5739 8.G GALVANIZED | VIS 6X12 5739 8.G ZN | SCHRAUBE 6X12 5739 8.G ZN | TORNILLO 6X12 5739 8.G ZN |
| 52 | F01020406 | VITE 6 X25 5739 8.G ZN | BOLT 6X25 5739 8.G GALVANIZED | VIS 6X25 5739 8.G ZN | SCHRAUBE 6X25 5739 8.G ZN | TORNILLO 6X25 5739 8.G ZN |
| 53 | F01230016 | DADO AUTOB.NOR.4 ZN | NORM.SELF-LOCKING NUT 4 GALVAN | ECROU AUTOB.NOR.4 ZN | SELBSTSP. MUTTER NOR. 4 ZN | TUERCA AUTOB. NOR. 4 ZN |
| 53 | F01220211 | DADO TRISTOP M 6 | NUT- TRISTOP M 6 | ECROU TRISTOP M 6 | MUTTER TRISTOP M 6 | TUERCA TRISTOP M 6 |
| 54 | 58162014 | ELEM.ELASTICO DEL GIUNTO 24.24 | ELASTIC ELEMENT OF JOINT 24.24 | ELEM. ELASTIQUE DU JOINT 24.24 | ELAST. KUPPLUNGSELEM. 24.24 | ELEM.ELÁSTICO DEL ACOPLAMIENTO |
| 55 | 15473770 | SOFFIANTE CONC.PNEUM.COMPL. | COMPL. FERTILIZER PNEUMATIC BL | SOUFFLEUR ENGRAIS PNEUMATIQUE | PNEUMATISCHES GEBLZSE KOMPL. | SOPLADOR ABONO NEUM-TICO COMPL |
| 56 | F01440012 | RONDELLA 20X28X2 DIN 988 > | WASHER 20X28X2 DIN 988 | RONDELLE 20X28X2 DIN 988 | UNTERLEGSCHEIBE 20X28X2 DIN 98 | ARANDELA 20X28X2 DIN 988 |
| 57 | F02050631 | ANELLO ARR.47 UNI 7437-75 | STOP RING 47 UNI 7437-75 | BAGUE ARRET 47 UNI 7437-75 | RING 47 UNI 7437-75 | ANILLO PARADA 47 UNI 7437-75 |
| 58 | 66248098 | TAPPO CONVOGLIATORE DEPR. SP | AIR PUMP CONVEYOR PLUG SP | BOUCHON CONVOYEUR TURBINE SP | VAKUUM FTRDERPFROPFEN SP | TAPN CONDUCTOR DEPR. SP D |

TAV. 66/173

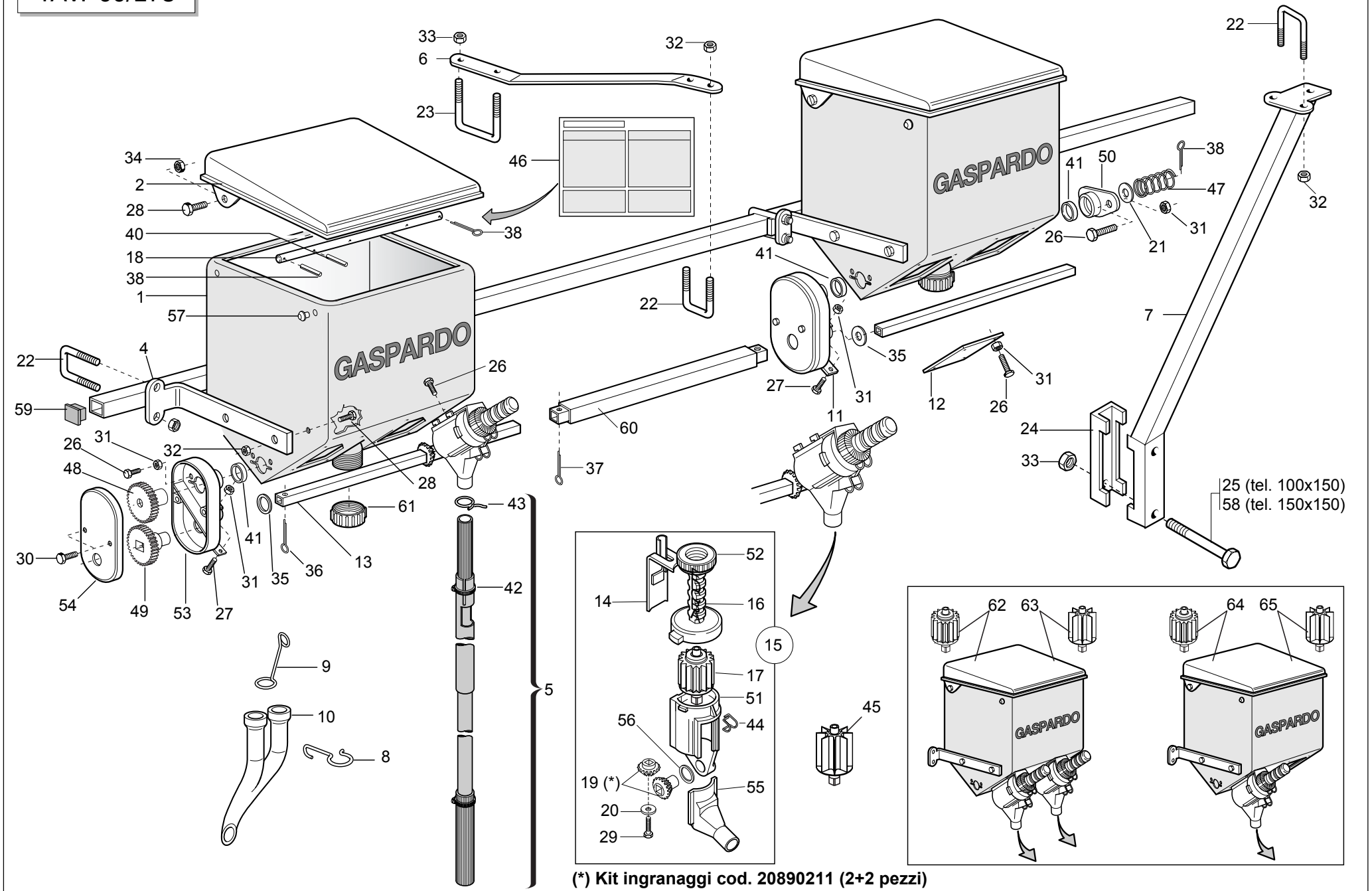


**(*) Kit ingranaggi cod. 20890211 (2+2 pezzi)**

## *MICROGRANULATORE*

TAV. 66/173

| Pos. | Cod. | Descrizione | Description | Description | Benennung | Descripcion |
|---|---|---|---|---|---|---|
| 1 | 19002932 | SERBATOIO MICRO 250 PLA. | PLASTIC TANK MICRO 250 | RESERVOIR MICRO 250 PLASTIQUE | MIKROGRANULATBEHZLTER PLAST. | DEPSITO MICRO 250 PLAST. |
| 2 | 15475231 | COPERCHIO MICRO 250 PLA. | PLASTIC COVER MICRO 250 | COUVERCLE MICRO 250 PLASTIQUE | MIKRO DECKEL 250 PLAST. | TAPA MICRO 250 PLAST. |
| 3 | 15475260 | SCONTRO SP | STRIKER PLATE SP | BUTEE SP | ANSCHLAG STREUER | ELEMENTO DE EMPALME SP |
| 4 | 15475271 | SUPPORTO MICRO | MICRO SUPPORT | SUPPORT MICROGRANULATEUR | HALTERUNG MICRO | SOPORTE MICRO |
| 5 | 15475331 | TUBO DISCESA MICRO SP | PIPE- MICRO DESCENT SP | TUBE DESCENTE MICRO SP | SENKROHR MIKRO SP | TUBO DESCENSO MICRO SP |
| 6 | 15475380 | ATTACCO AL 3°P.BARRA MICRO | MICRO BAR 3-POINT COUPLING | ATTELAGE AU 3[ P, BARRE MICRO | KUPPLUNG AM 3[PUNKT STANGE MIK | CONEXIN AL 3P.BARRA MICRO OP |
| 6 | 16670240 | TIRANTE BARRA MICRO S.SPANDI | S. FERTILISER SPREADER MICRO B | TRINGLE BARRE MICRO S. EPANDEU | SPANNSTANGE MIKRO STANGE S. Ds | TIRANTE BARRA MICRO S. ABONADO |
| 7 | 15475411 | SUPP.BARRA MICRO M.S.SPAN. | M.S. FERTILISER SPREADER MICRO | SUPPORT BARRE MICRO M.S. EPAND | MIKRO SPINDELHALTERUNG M.S. Ds | SOPORTE BARRA MICRO M.S. ABONA |
| 8 | 18903180 | MOLLA CONVOGLIATORE MICRO | MICRO CONVEYOR SPRING | RESSORT CONVOYEUR MICRO | FEDER MIKRO FTRDERER | MUELLE CONDUCTOR MICRO |
| 9 | 18903191 | MOLLA SPEC.ZN DISCESA MICRO | SPEC.SPRING ZN MICRO GUIDE | RESSORT SPEC. ZN GUIDE MICRO | SPEZIALFEDER ZN F_HR.MIKRO | MUELLE ESPEC. ZN GUA MICRO |
| 10 | 19002580 | RACCORDO FINALE CONCIMAZ.PNEUM | PNEUMAT. MAN. SPR. END UNION | RACCORD FINAL FUMAGE PNEUMAT. | ENDANSCHLUSS PNEUM. DsNGUNG | UNIN FINAL DE ABONAD. NEUMAT.R |
| 11 | 20890078 | PIASTRA DI COLLEGAMENTO | CONNECTION PLATE | PLAQUE DE RACCORD | VERBINDUNGSPLATTE | PLACA DE CONEXIN P |
| 12 | 20890079 | PIASTRA DI CHIUSURA | CLOSURE PLATE | PLAQUE DE FERMETURE | ABSCHLUSSPLATTE | PLACA DE CIERRE |
| 13 | 20890081 | ASSE DISTRIB.MICRO L.445 | MICRO DISTR. SPINDLE- L. 445 | AXE DISTRIBUTEUR MICRO L. 445 | MIKRO STREUERACHSE L 445 | EJE DISTRIB.MICRO L.445 |
| 14 | 20890089 | REGOLATORE DI APERTURA | OPENING REGULATOR | REGULATEUR D'OUVERTURE | TFFNUNGSEINSTELLER | REGULADOR DE ABERTURA |
| 15 | 20890135 | DISTRIB.NYLON COMPL.E SCIVOLO | DISTRIB. NYLON ASSY. AND CHUTE | MINIMAX COMPL 20C MICRO | SZAPPARAT NYLON KOMPL. UND RUT | DISTRIB.NYLON COMPL.Y PLANO IN |
| 16 | 20890151 | VITE-SCALA GRADUATA | GRADUATED SCALE BOLT | VIS-ECHELLE GRADUEE | SCHRAUBE - GRADSKALA | TORNILLO - ESCALA GRADUADA |
| 17 | 20890158 | DOSATORE MICRO COMPL. | ROTOR DIST. MICRO 20 GROOVES | ROTOR DOSEUR 20C MICRO | DOSIERER MIKRO KOMPL. 20 SEKT | DOSIFICADOR MICRO COMPL.20 SEC |
| 18 | 20890194 | ASSE AGITATORE SERB.MICRO 250 | STIRRER SPINDLE- MICRO TANK 25 | AXE AGITATEUR RESERVOIR MICRO | SAMENMISCHERACHSE BEH.MIKRO 25 | EJE AGITADOR DEPS. MICRO 250 A |
| 19 | 20890211 | KIT INGRANAGGI DISTRIB.MICRO | KIT- MICRO. DISTR. GEARS | COUPLE CON DISTR MICRO (2+2) | KIT ZAHNRZDER MIKROSTREUER | SET ENGRANAJES DISTRIB.MICRO |
| 20 | F01420011 | ROND.PIANA 4,3X 16X1,5 6593 ZN | FLAT WASHER 4-3X 16X1-5 6593 G | ROND.PLATE 4-3X 16X1-5 6593 ZN | SCHEIBE 4-3X 16X1-5 6593 ZN | ARAND. PLANA 4-3X 16X1-5 6593 |
| 21 | 22220073 | RONDELLA 28X0,3X16,5 | WASHER 28X0-3X16-5 | RONDELLE 28X0-3X16-5 | UNTERLEGSCHEIBE 28X0-3X16-5 | ARANDELA 28X0-3X16-5 |
| 22 | 22250272 | CAVALLOTTO SUPP.DISCO SV | DISK SUPPORT.ELEMENT U BOLT SV | CAVALIER SUPPORT DISQUE SV | VERBINDUNG SCHEIBENHALTERUNG S | PERNO EN U SOP. DISCO SV |
| 23 | 15111050 | CAVALLOTTO M14X96 - 119 ZN | U-BOLT M14X96 - 119 ZN | CAVALIER M14X96 - 119 ZN | VERBINDUNG M14X96 - 119 ZN | PERNO EN U M14X96 - 119 ZN |
| 24 | 15110091 | SCONTRO A U | STRIKER | BRIDE 150 MM | ANSCHLAG | ELEMENTO DE EMPALME |
| 25 | 41601101 | VITE 14 X160 5737 8.G | BOLT M 14 X160 5737 8.G | VIS M 14 X160 5737 8.G | SCHRAUBE M 14 X160 5737 8.G | TORNILLO M 14 X160 5737 8.G |
| 26 | F01020397 | VITE 6 X10 5739 8.G ZN | BOLT 6X10 5739 8.G GALVANIZED | VIS 6X10 5739 8.G ZN | SCHRAUBE 6X10 5739 8.G ZN | TORNILLO 6X10 5739 8.G ZN |
| 27 | F01020403 | VITE 6 X16 5739 8.G ZN | BOLT 6X16 5739 8.G GALVANIZED | VIS 6X16 5739 8.G ZN | SCHRAUBE 6X16 5739 8.G ZN | TORNILLO 6X16 5739 8.G ZN |
| 28 | F01020472 | VITE 10X25 5739 8.G ZN | BOLT 10X25 5739 8.G GALVANIZED | VIS 10X25 5739 8.G ZN | SCHRAUBE 10X25 5739 8.G ZN | TORNILLO 10X25 5739 8.G ZN |
| 29 | F01070061 | VITE 3,9X9,5 DIN 7981 | BOLT 3-9X 9-5 DIN 7981 | VIS 3-9X 9-5 DIN 7981 | SCHRAUBE 3-9X 9-5 DIN 7981 | TORNILLO 3-9X 9-5 DIN 7981 |
| 30 | F01070121 | VITE 3,9X9,5 DIN 7982 | BOLT 3-9X 9-5 DIN 7982 | VIS 3-9X 9-5 DIN 7982 | SCHRAUBE 3-9X 9-5 DIN 7982 | TORNILLO 3-9X 9-5 DIN 7982 |
| 31 | F01200232 | DADO 6 5588 6.8 ZN | NUT 6 UNI 5588 6.8 GALVANIZED | ECROU 6 UNI 5588 6.8 ZN | MUTTER 6 UNI 5588 6.8 ZN | TUERCA 6 UNI 5588 6.8 ZN |
| 32 | F01200270 | DADO 10 5588 6.8 ZN | SCREW 10 UNI 5588 6.8 GALVANIZ | ECROU 10 UNI 5588 6.8 ZN | MUTTER 10 UNI 5588 6.8 ZN | TUERCA 10 UNI 5588 6.8 ZN |
| 33 | F01200306 | DADO 14 5588 6.8 ZN | NUT 14 UNI 5588 6.8 GALVANIZED | ECROU 14 UNI 5588 6.8 ZN | MUTTER 14 UNI 5588 6.8 ZN | TUERCA 14 UNI 5588 6.8 ZN |
| 34 | F01220233 | DADO TRISTOP M10 | NUT TRISTOP M10 | ECROU TRISTOP M10 | MUTTER TRISTOP M10 | TUERCA TRISTOP M10 |
| 35 | F01410088 | RONDELLA D14 UNI 6592 ZN | WASHER D14 UNI 6592 GALVANIZED | RONDELLE D14 UNI 6592 ZN | UNTERLEGSCHEIBE D14 UNI 6592 Z | ARANDELA D14 UNI 6592 ZN |
| 36 | F02200161 | COPIGLIA 3 X15 1336 ZN | SPLIT PIN 3 X15 1336 GALVAN. | GOUPILLE 3 X15 1336 ZN | SPLINT 3 X15 1336 ZN | PASADOR 3 X15 1336 ZN |
| 37 | F02200162 | COPIGLIA 3 X20 1336 ZN | SPLIT PIN 3 X20 1336 GALVAN. | GOUPILLE 3 X20 1336 ZN | SPLINT 3 X20 1336 ZN | PASADOR 3 X20 1336 ZN |
| 38 | F02200194 | COPIGLIA 4 X25 1336 ZN | SPLIT PIN 4 X25 1336 GALVAN. | GOUPILLE 4 X25 1336 ZN | SPLINT 4 X25 1336 ZN | PASADOR 4 X25 1336 ZN |
| 39 | F02100083 | SPINA EL.5 X24 DIN 1481 | PIN EL. 5 X24 DIN 1481 | FICHE EL. 5 X24 DIN 1481 | SPANNSTIFT 5 X24 DIN 1481 | CLAVIJA EL.5 X24 DIN 1481 |
| 40 | F02100089 | SPINA EL.5 X36 DIN 1481 | PIN EL. 5 X36 DIN 1481 | FICHE EL. 5 X36 DIN 1481 | SPANNSTIFT 5 X36 DIN 1481 | CLAVIJA EL.5 X36 DIN 1481 |
| 41 | F03011081 | GUARNIZIONI LABBRO DE100 | LIP GASKET DE100 | GARNITURES LEVRE DE100 | LIPPENDICHTUNG DE100 | GUA DELANTERA G |
| 42 | F02300016 | FASCETTA STRING.16/27 | STRING FASTENING STRAPS .16/27 | COLLIER DE SERRAGE 16/27 L | ROHRSCHELLE .16/27 L | ABRAZADERA APRET.16/27 L |
| 43 | 65336041 | MOLLA SPEC.ZN STRINGITUBO M80 | SPEC.SPRING ZN . PIPE CLAMP M8 | RESSORT SPEC. ZN SERRE-TUBE M8 | SPEZIALFEDER ZN ROHRSCHELLE M8 | MUELLE ESPEC. ZN APLASTA TUBOS |
| 44 | 65336046 | MOLLA SPEC.ZN SCIVOLO M80 | SPEC SPRING ZN CHUTE M80 | RESSORT SPEC. ZN LANCOIR M80 | SPEZIALFEDER ZN RUTSCHE M80 | MUELLE ESPEC. ZN PLANO INCLINA |
| 45 | 22250240 | DOSATORE COMPL. SV | MICRO DISTR.ROTOR 8 GROOVES | ROTOR DOSEUR 8C MICRO | DOSIERER KOMPL. SV | DOSIFICADOR COMPL. SV |
| 46 | 19703300 | DECAL.TABELLA MICRO ST250 | MICRO CHART STICKER | DECALC. TABLEAU MICRO | ABZIEHB. TABELLE MIKOR | CAL.TABLA MICRO |
| 46 | 19702460 | DECAL.TABELLA DISTRIB.UMOSTART | UMOSTART DISTRIBUTOR CHART STI | DECALC. TABLEAU DISTRIBUTEUR U | ABZIEHB. TABELLE SZAPPARAT UMO | CAL.TABLA DISTRIBUDOR UMOSTART |
| 47 | 65338043 | MOLLA COMP.ZN SERB. M80 | ZN TANK COMP.SPRING M80 | RESSORT COMPL. ZN RESERVOIR M8 | DRUCKFEDER ZN BEHZLTER M80 | MUELLE COMP.ZN DEPS. M80 A |
| 48 | 66248119 | RUOTA DENTATA Z-24 M80 | GEAR-WHEEL Z-24 M80 | ROUE DENTEE Z-24 M80 | ZAHNRAD Z-24 M80 | RUEDA DENTADA Z-24 M80 |
| 49 | 66248120 | RUOTA DENT.FORO QUAD.Z-24 M80 | GEAR-WHEEL- SQUARE HOLE- Z-24 | ROUE DENTEE TROU CARRE Z-24 M8 | RAD VERZAHNT VIERKANTLOCH.Z-24 | RUEDA DENT.ORIFICIO CUAD.Z-24 |
| 50 | 66248121 | BOCCOLA CON FLANGIA M80 | BUSHING W/ FLANGE M80 | SUPPORT AVEC BRIDE M80 | BsCHSE MIT FLANSCH M80 | CASQUILLO CON BRIDA M80 |
| 51 | 66248123 | CORPO DISTRIBUZIONE M80 | DISTRIBUTION CASING M80 | CORPS DISTRIBUTION M80 | VERTEILUNGSKTRPER | CUERPO DISTRIBUCIN M80 C |
| 52 | 66248125 | GHIERA REGOLAZIONE M80 | ADJUSTMENT KNURLED NUT M80 | BAGUE REGLAGE M80 | EINSTELLMUTTER M80 | CONTRATUERCA REGULACIN M80 G |
| 53 | 66248126 | SUPP.TRASMISSIONE M80 | TRANSM.SUPPORT M80 | SUPPORT ENTRAINEMENT M80 | ANTRIEBSHALTERUNG M80 | SOPORTE TRANSMISIN M80 S |

TAV. 66/173

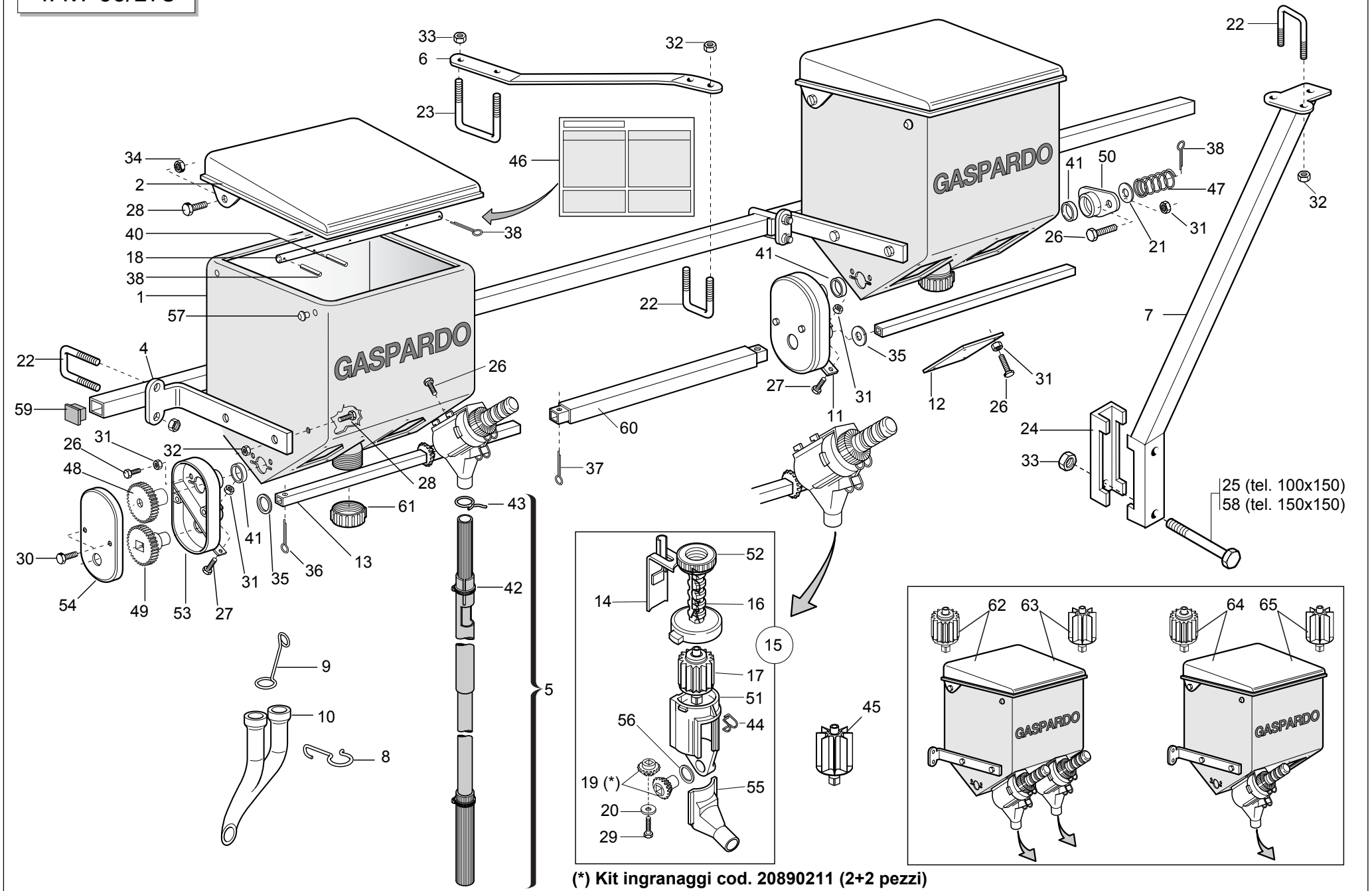


**(*) Kit ingranaggi cod. 20890211 (2+2 pezzi)**

## *MICROGRANULATORE*

TAV. 66/173

| Pos. | Cod. | Descrizione | Description | Description | Benennung | Descripcion |
|---|---|---|---|---|---|---|
| 54 | 66248138 | COPERCHIO SUPP.TRASM. M80 | TRANSMISSION SUPP. COVER M80 | COUVERCLE SUPPORT ENTRAINEM. | DECKEL ANTRIEBSHALTERUNGS M80 | TAPA SOP. TRANSM. M80 |
| 55 | 66248154 | SCIVOLO DISTR. M80 | CHUTE- DISTRIB. M80 | ENTONNOIR DOSEUR MINIMAX MICRO | SAAPPARAT RUTSCHE M80 | PLANO INCLINADO DISTR. M80 |
| 56 | 20970100 | RONDELLA 30X0,5X22 ACC. | WASHER 30X0-5X22 ACC. | RONDELLE 30X0-5X22 ACIER | UNTERLEGSCHEIBE 30X0-5X22 ACC. | ARANDELA 30X0-5X22 ACC. |
| 57 | 66248223 | TAPPO SUPP.SPAND.D.11 | PLUG MAN. SPR. SUPP. D.11 | BOUCHON SUPPORT EP. ENGRAIS D. | HALTERUNGSPFROPFEN DsNGERSTR. | TAPN SOPORTE ABON.D.11 D |
| 58 | 41602124 | VITE 14X220 5737 8.G ZN | BOLT 14X220 5737 8.G GALVANIZ. | VIS 14X220 5737 8.G ZN | SCHRAUBE 14X220 5737 8.G ZN | TORNILLO 14X220 5737 8.G ZN |
| 59 | 15475560 | TAPPO TUBO 35X35 | PLUG PIPE 35X35 | BOUCHON TUBE 35X35 | ROHRPFROPFEN 35X35 | TAP N TUBO 35X35 |
| 60 | 20890111 | MANIC.UNIONE RINV.MICRO L.470 | MICRO TRANSM.JOINT SLEEVE L.47 | MANCHON RACCORD TRANSMISSION M | VERBINDUNGSMUFFE VORGELEGE MIK | MANGUITO EMPALME TRANSM. MICRO |
| 60 | 22505085 | FERMO ASSE IN LAMIERA | PLATE AXLE STOP | ARRET AXE EN TOLE | FESTSTELLVORRICHTUNG BLECHACHS | BLOQUEO EJE DE CHAPA |
| 60 | 20890130 | MANICOTTO UNIONE MICRO L.550 | MICRO JOINT SLEEVE | MANCHON RACCORD MICRO L. 550 | VERBINDUNGSMUFFE MIKRO L 550 | MANGUITO DE UNIN MICRO L.550 M |
| 60 | 20890201 | MANICOTTO UNIONE MICRO L.440 | MICRO JOINT SLEEVE L.440 | MANCHON RACCORD MICRO L. 440 | VERBINDUNGSMUFFE MIKRO L.440 | MANGUITO DE UNIN MICRO L.440 M |
| 60 | 20890202 | MANICOTTO UNIONE MICRO L.690 | MICRO JOINT SLEEVE L.690 | MANCHON RACCORD MICRO L. 690 | VERBINDUNGSMUFFE MIKRO L.690 | MANGUITO DE UNIN MICRO L.690 M |
| 60 | 20890203 | MANICOTTO UNIONE MICRO L.1620 | MICRO JOINT SLEEVE L.1620 | MANCHON RACCORD MICRO L. 1620 | VERBINDUNGSMUFFE MIKRO L.1620 | MANGUITO DE UNIN MICRO L.1620M |
| 60 | 20890205 | MANICOTTO UNIONE MICRO L.250 | MICRO JOINT SLEEVE L.250 | MANCHON RACCORD MICRO L. 250 | VERBINDUNGSMUFFE MIKRO L.250 | MANGUITO DE UNIN MICRO L.250 M |
| 61 | F03150758 | TAPPO FILETTATO SERB.MICRO | MICRO TANK THREADED PLUG | BOUCHON FILETE RESERV.MICRO | GEWINDEPFROPFEN MIKROBEH. | TAPN ROSCADO DEPS.MICRO DO |
| 62 | 15476270 | SERBATOIO MICRO 250 2 U.PLA | MICRO TANK 250 2 OUTPUTS | RESERVOIR MICRO 250 2 SORTIES | MIKROGRANULATBEHZLTER 250 2 AU | DEPSITO MICRO 250 2 SALIDAS B |
| 63 | 16675020 | SERB.MICRO 250 2U PLA 8P.COMPL | MICRO TANK 250 2 OUTPUTS 8P. C | RESERV. MICRO 250 2 SORT. 8P. | MIKROGRANULATBEH. 250 2AUSG. 8 | DEPSITO MICRO 250 2 SALIDAS 8P |
| 64 | 15476280 | SERBATOIO MICRO PLA 1U COMPL | COMPL. MICRO TANK PLA 1U | RESERVOIR MICRO PLA 1U COMPL. | BEH-LTER MIKROGRANULAT PLASTIK | DEPOSITO MICRO PLA 1U COMPL. |
| 65 | 16675030 | SERB.MICRO 250 1U PLA 8P.COMPL | MICRO TANK 250 1 OUTPUTS 8P. C | RESERV. MICRO 250 1 SORT. 8P. | MIKROGRANULATBEH. 250 1AUSG. 8 | DEPSITO MICRO 250 1 SALIDAS 8P |

# TAV. 66/182

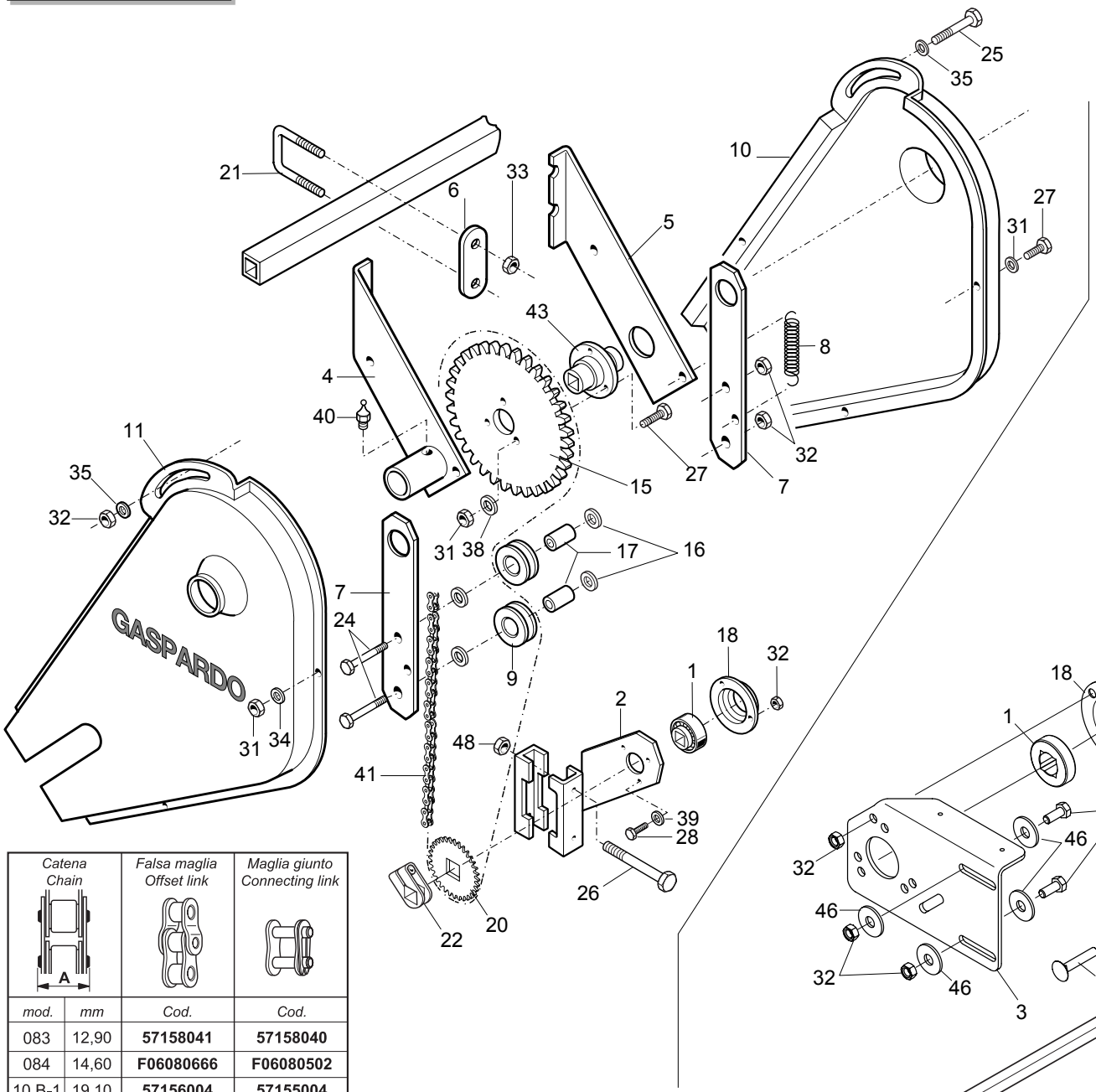


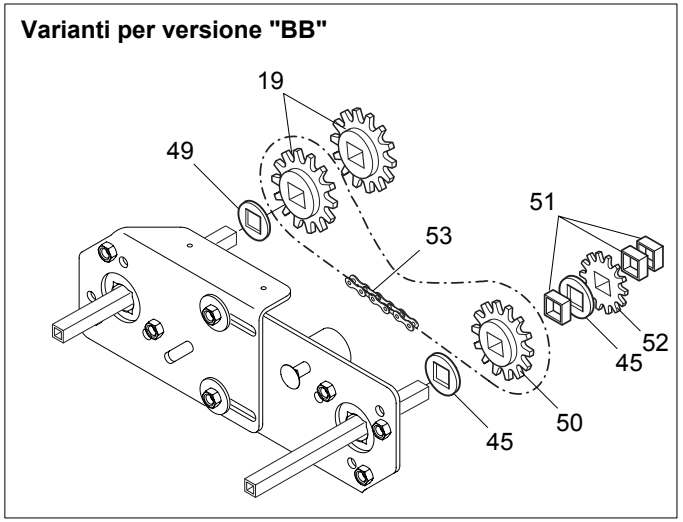


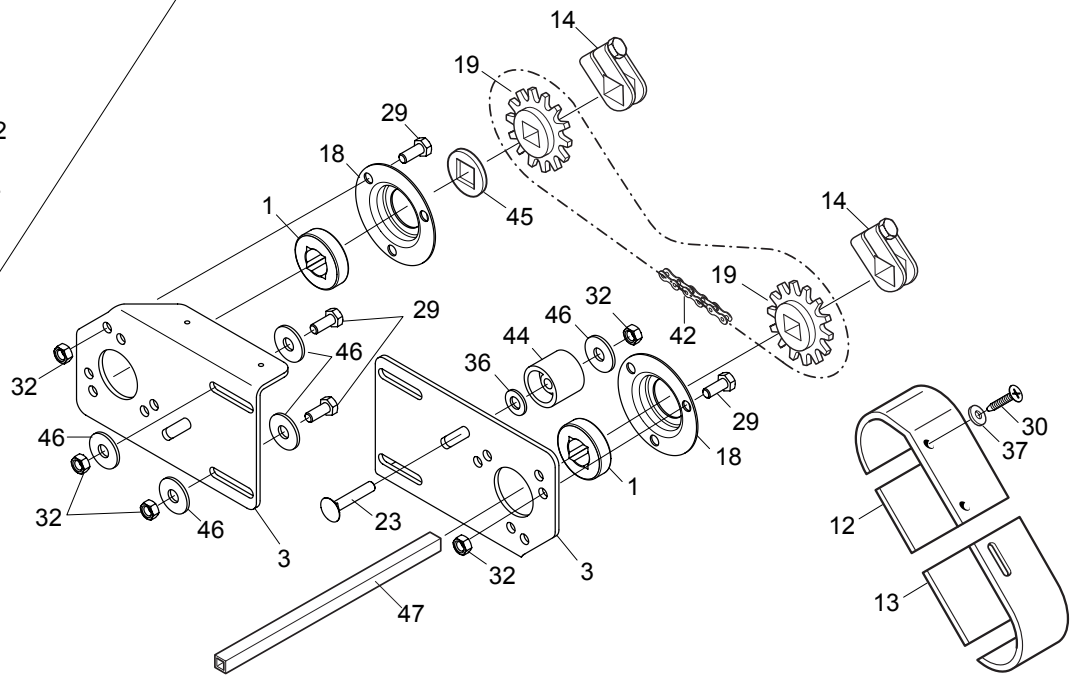

| Catena Chain | | Falsa maglia Offset link | Maglia giunto Connecting link |
|---|---|---|---|
| mod. | mm | Cod. | Cod. |
| 083 | 12,90 | **57158041** | **57158040** |
| 084 | 14,60 | **F06080666** | **F06080502** |
| 10 B-1 | 19,10 | **57156004** | **57155004** |

# TRASMISSIONE SPANDICONCIME E MICROGRANULATORE

TAV. 66/182

| Pos. | Cod. | Descrizione | Description | Description | Benennung | Descripcion |
|---|---|---|---|---|---|---|
| 1 | 14830390 | CUSCINETTO FORO QUADRO | SQUARE-HOLED BEARING | ROULEMENT AL+SAGE CARR+ | VIERKANTLAGER | COJINETE ORIFICIO CUADRADO |
| 2 | 15470381 | SUPPORTO RINVIO TUBO 150 | TRANSM. SUPPORT FOR PIPE 150 | SUPPORT RENVOI POUR TUBE 150 | HALTERUNG VORGELEGE ROHR 150 | SOPORTE TRANSMISION TUBO 150 |
| 3 | 15470851 | FIANCO SUPP.TRASM.SPANDI | SPREADER TRANSM. SIDE SUPPORT | COTE SUPPORT TRANSM. EPAND. | SEITEN HALTER. ANTRIEB DUNGERS | COSTADO SOPORTE TRANSM. ABONAD |
| 4 | 15475031 | SUPPORTO TRASMISSIONE SX | LEFT TRANSMISSION SUPPORT | SUPPORT ENTRAINEMENT GCH | HALTERUNG GETRIEBE LI | SOPORTE TRANSMISIN IZQ S |
| 5 | 15475041 | SUPPORTO TRASMISSIONE DX | RIGHT TRANSMISSION SUPPORT | SUPPORT ENTRAINEMENT DRT | HALTERUNG GETRIEBE RE | SOPORTE TRANSMISIN DER S |
| 6 | 15475260 | SCONTRO SP | STRIKER PLATE SP | BUTEE SP | ANSCHLAG STREUER | ELEMENTO DE EMPALME SP |
| 7 | 15475310 | SUPPORTO RULLINI TENDIC. MICRO | MICRO CHAIN STRETCHER ROLLERS | SUPP. ROUETS TEND. CHAINE MICR | HALTERUNG KETTENSPANNROLLEN | SOP. RODILLOS TENSOR CADENA MI |
| 8 | 18902960 | MOLLA TRAZ.TRASM.RUOTA ZN | TRANSMISSION TENSIONER SPRING | RESSORT TRACT. ENTRAIN. ROUE Z | ZUGFEDER RADANTRIEB ZN | MUELLE TRAC. TRANSM.RUEDA ZN |
| 9 | 19000091 | ROCCHETTO 2 META' | CHAIN TENSIONER | TENDEUR DE CHAINE 2 MOITIE | KLEINRAD SPANNER SA | CARRETE TENSOR SA |
| 10 | 19002810 | CARTER RINVIO MICRO DX | RIGHT MICRO TRANSM. CASE | CARTER TRANSM. MICRO DRT | VORGELEGEGEHZUSE MIKRO RE | CæRTER TRANSMISIN MICRO DER C |
| 11 | 19002820 | CARTER RINVIO MICRO SX | LEFT MICRO TRANSM. CASE | CARTER TRANSM. MICRO GCH | VORGELEGEGEHZUSE MIKRO LI | CæRTER TRANSMISIN MICRO IZQ C |
| 12 | 19002830 | CARTER TRASMISSIONE SUPERIORE | TOP TRANSMISSION CASE | CARTER ENTRAINEMENT SUPERIEUR | OBERES ANTRIEBSGEHZUSE | CæRTER TRANSMISIN SUPERIOR C |
| 13 | 19002880 | CARTER INFERIORE TRASM.SPAND. | BOTTOM SPREADER TRANSM. CASE | CARTER INFERIEUR TRANSM EPAND. | UNTER. ANTRIEBSGEHZUSE DsNG.GE | CæRTER INFER. TRANSMISIN ABONC |
| 14 | 22505085 | FERMO ASSE IN LAMIERA | PLATE AXLE STOP | ARRET AXE EN TOLE | FESTSTELLVORRICHTUNG BLECHACHS | BLOQUEO EJE DE CHAPA |
| 15 | 20890128 | CORONA Z-42 SP | RING GEAR Z-42 SP | COURONNE Z-42 SP | KRANZ Z-42 SP | CORONA Z-42 SP |
| 16 | 20970032 | RONDELLA 32X4X8,5 | WASHER 32X4X8-5 | RONDELLE 32X4X8-5 | UNTERLEGSCHEIBE 32X4X8-5 | ARANDELA 32X4X8-5 |
| 17 | 20980086 | BOCCOLA DIST.D.8,5X16X31 | BUSHING SPAC.. D.8-5X16X31 | BOITE ENTRETOISE D. 8-5X16X31 | VERTEILERBsCHSE D.8-5X16X31 | CASQUILLO DIST. D.8-5X16X31 |
| 18 | 22230094 | SUPPORTO CUSCINETTO | BEARING SUPPORT | SUPPORT PALIER | LAGERBsCHSE | SOPORTE COJINETE |
| 19 | 22250007 | INGR.CON MOZZO 1/2 Z-20 SV | GEARS- W/ HUB 1/2 Z-20 SV | ENGRENAGE 1/2 Z-20 | ZAHNRAD MIT NABE 1/2 Z-20 SV | ENGRAN.CON PERNO 1/2 Z-20 SV |
| 20 | 22250028 | PIGNONE Z-15 SV | Z-15 PINION SV | PIGNON Z-15 SV | RITZEL Z-15 SV | PI¾N Z-15 SV P |
| 21 | 22250272 | CAVALLOTTO SUPP.DISCO SV | DISK SUPPORT.ELEMENT U BOLT SV | CAVALIER SUPPORT DISQUE SV | VERBINDUNG SCHEIBENHALTERUNG S | PERNO EN U SOP. DISCO SV |
| 22 | 22505085 | FERMO ASSE IN LAMIERA | PLATE AXLE STOP | ARRET AXE EN TOLE | FESTSTELLVORRICHTUNG BLECHACHS | BLOQUEO EJE DE CHAPA |
| 23 | F01060047 | VITE 8 X45 5732 4.6 ZN | BOLT 8X45 5732 4.6 GALVANIZED | VIS 8X45 5732 4.6 ZN | SCHRAUBE 8X45 5732 4.6 ZN | TORNILLO 8X45 5732 4.6 ZN |
| 24 | F01020075 | VITE 8 X55 5737 8.G ZN | BOLT 8 X55 5737 8.G GALVANIZED | VIS 8 X55 5737 8.G ZN | SCHRAUBE 8 X55 5737 8.G ZN | TORNILLO 8 X55 5737 8.G ZN |
| 25 | F01020083 | VITE 8 X70 5737 8.G ZN | BOLT 8 X70 5737 8.G GALVANIZ | VIS 8 X70 5737 8.G ZN | SCHRAUBE 8 X70 5737 8.G ZN | TORNILLO 8X70 5737 8.G ZN |
| 26 | 41602124 | VITE 14X220 5737 8.G ZN | BOLT 14X220 5737 8.G GALVANIZ. | VIS 14X220 5737 8.G ZN | SCHRAUBE 14X220 5737 8.G ZN | TORNILLO 14X220 5737 8.G ZN |
| 27 | F01020403 | VITE 6 X16 5739 8.G ZN | BOLT 6X16 5739 8.G GALVANIZED | VIS 6X16 5739 8.G ZN | SCHRAUBE 6X16 5739 8.G ZN | TORNILLO 6X16 5739 8.G ZN |
| 28 | F01020432 | VITE 8 X16 5739 8.G ZN | BOLT 8X16 5739 8.G GALVANIZED | VIS 8X16 5739 8.G ZN | SCHRAUBE 8X16 5739 8.G ZN | TORNILLO 8X16 5739 8.G ZN |
| 29 | F01020436 | VITE 8 X20 5739 8.G ZN | BOLT 8X20 5739 8.G GALVANIZED | VIS 8X20 5739 8.G ZN | SCHRAUBE 8X20 5739 8.G ZN | TORNILLO 8X20 5739 8.G ZN |
| 30 | F01070074 | VITE 4,2X25 DIN 7981 | BOLT 4-2X25 DIN 7981 | VIS 4-2X25 DIN 7981 | SCHRAUBE 4-2X25 DIN 7981 | TORNILLO 4-2X25 DIN 7981 |
| 31 | F01200232 | DADO 6 5588 6.8 ZN | NUT 6 UNI 5588 6.8 GALVANIZED | ECROU 6 UNI 5588 6.8 ZN | MUTTER 6 UNI 5588 6.8 ZN | TUERCA 6 UNI 5588 6.8 ZN |
| 32 | F01200244 | DADO 8 5588 6.8 ZN | NUT 8 UNI 5588 6.8 GALVANIZED | ECROU 8 UNI 5588 6.8 ZN | MUTTER 8 UNI 5588 6.8 ZN | TUERCA 8 UNI 5588 6.8 ZN |
| 33 | F01200270 | DADO 10 5588 6.8 ZN | SCREW 10 UNI 5588 6.8 GALVANIZ | ECROU 10 UNI 5588 6.8 ZN | MUTTER 10 UNI 5588 6.8 ZN | TUERCA 10 UNI 5588 6.8 ZN |
| 34 | F01410037 | RONDELLA D6 UNI 6592 ZN | WASHER D6 UNI 6592 GALVANIZED | RONDELLE D6 UNI 6592 ZN | UNTERLEGSCHEIBE D6 UNI 6592 ZN | ARANDELA D6 UNI 6592 ZN |
| 35 | F01410051 | RONDELLA D8 UNI 6592 ZN | WASHER D8 UNI 6592 GALVANIZED | RONDELLE D8 UNI 6592 ZN | UNTERLEGSCHEIBE D8 UNI 6592 ZN | ARANDELA D8 UNI 6592 ZN |
| 36 | F01410064 | RONDELLA D10 UNI 6592 ZN | WASHER D10 UNI 6592 GALVANIZED | RONDELLE D10 UNI 6592 ZN | UNTERLEGSCHEIBE D10 UNI 6592 Z | ARANDELA D10 UNI 6592 ZN |
| 37 | F01420011 | ROND.PIANA 4,3X 16X1,5 6593 ZN | FLAT WASHER 4-3X 16X1-5 6593 G | ROND.PLATE 4-3X 16X1-5 6593 ZN | SCHEIBE 4-3X 16X1-5 6593 ZN | ARAND. PLANA 4-3X 16X1-5 6593 |
| 38 | F01430047 | RONDELLA D6 DIN 6798 D.INT.ZN | WASHER D6 DIN 6798 D.INT.GALV. | RONDELLE D6 DIN 6798 D. INT. Z | UNT. SCHEIBE D6 DIN 6798 D. IN | ARANDELA D6 DIN 6798 D.INT.ZN |
| 39 | F01430059 | RONDELLA D8 DIN 6798 D.INT.ZN | WASHER D8 DIN 6798 D.INT.ZN | RONDELLE D8 DIN 6798 D. INT. Z | UNT. SCHEIBE D8 DIN 6798 D. IN | ARANDELA D8 DIN 6798 D.INT.ZN |
| 40 | F01100011 | INGRASS.A SFERE M6X1/A | SPHERE NIPPLE M6X1/A | GRAISSEUR A BILLES M6X1/A | KUGELFETTBsCHSE M6X1/A | ENGRAS. DE ESFERAS M6X1/A |
| 41 | F06080057 | CATENA ISO 083 107MAGLIE | CHAIN ISO 083 107 LINKS | CHAINE ISO 083 107 MAILLES | KETTE ISO 083 107 GLIEDER | CADENA ISO 083 107 ESLABNE L |
| 42 | F06080025 | CATENA 1/2-3/16 56 MAGLIE | CHAIN 1/2-3/16 56 LINKS. | CHAINE 1/2-3/16 56 MAILLES | KETTE 1/2-3/16 56 GLIEDER | CADENA 1/2-3/16 56 ESLABNE |
| 43 | 66248152 | MOZZO TRASM.MICRO M80 | HUB - TRANSM. MICRO M80 | MOYEU ENTRAINEMENT MICRO M80 | ANTRIEBSNABE MIKRO M80 | CUBO TRANSM. MICRO M80 |
| 44 | 66248207 | TENDICATENA SPAND. SP-520 | CHAIN TENSIONER | TENDEUR DE CHAINE EPAND. ENGR. | KETTENSPANNER DsNGERSTR. SP-52 | TENSOR DE CADENA ABON. SP-520 |
| 45 | 66248218 | RONDELLA DISTAN.SPAND. | MAN. SPR. SPACER WASHER | RONDELLE ENTRETOISE EP. ENGRAI | ABSTANDSCHEIBE DsNGERSTREUER | ARANDELA DISTAN.ABONAD. |
| 46 | F01420048 | ROND.PIANA 9X 24X2 6593 ZN | FLAT WASHER 9X 24X2 6593 GALV. | ROND. PLATE 9X 24X2 6593 ZN | SCHEIBE 9X 24X2 6593 ZN | ARAND. PLANA 9X 24X2 6593 ZN |
| 47 | 22230138 | ASSE CAMBIO 4F.80-6F.45 L.1000 | GEAR SPINDLE 4-ROW 80- 6-ROW.4 | AXE BOITE DE VITESSE 4 RA | GETRIEBEACHSE 4 R. 80-6 R.45 L | EJE CAMBIO 4 FILAS. 80-6 FILAS |
| 47 | 22230142 | ASSE 4 FILE L.800 | 4-ROW SPINDLE L.800 | AXE 4 RANGEES L. 800 | ACHSE 4 REIHEN B. 800 | EJE 4 FILAS L.800 |
| 47 | 22230140 | ASSE SEMINAT.4F.CM.80 L.1200 | AXLE- 4-ROW SEEDER MACH. 80 CM | AXE SEMEUR 4 RANGEES CM. 80 L. | ACHSE SZAELEMENT 4R.CM.80 L.12 | EJE SEMBR. 4 FILAS. CM.80 L.12 |
| 48 | F01200306 | DADO 14 5588 6.8 ZN | NUT 14 UNI 5588 6.8 GALVANIZED | ECROU 14 UNI 5588 6.8 ZN | MUTTER 14 UNI 5588 6.8 ZN | TUERCA 14 UNI 5588 6.8 ZN |
| 49 | 18701620 | RONDELLA 16,5 X35 X3 QU.ZN | WASHER 16.5 X 35 X 3- GALVAN. | RONDELLE 16-5 X35 X3 QU.ZN | UNTERLEGSCHEIBE 16-5 X35 X3 Q | ARANDELA 16-5 X35 X3 QU.ZN |
| 50 | 22250044 | CORONA CAMBIO Z-17 SV | GEARBOX RING GEAR Z-17 SV | COURONNE BOITE DE VITESSE | GETRIEBEKRANZ Z-17 SV | CORONA CAMBIO Z-17 SV |
| 51 | 15231410 | DISTANZIALE INTERNO ZN | INNER SPACER | ENTRETOISE INT. | INNERES DISTANZST_CK | DISTANCIADOR INTERIOR |
| 52 | 20860086 | INGRANAGGIO 1/2 Z-12 F.Q. | GEAR 1/2 Z-12 F.Q. | ENGRENAGE 1/2 Z-12 TROUS CARRE | ZAHNRAD 1/2 Z-12 F.Q. | ENGRANAJE 1/2 Z-12 F.Q. |
| 53 | F06080031 | SPEZ.CAT.1/2 ISO 083 64MAGLIE | CUT-DOWN CHAIN .1/2 ISO 083 64 | TR. CH.1/2 ISO 083 64 MAILLES | KETTENLZNGE 1/2 ISO 083 64 GL | TRECHO CADENA 1/2 ISO 083 64 E |
| 53 | F06080197 | CATENA 1/2 ISO 083 58 MAGLIE | CHAIN 1/2 ISO 083 58 LINKS | CHAINE 1/2 ISO 083 58 MAILLES | KETTE 1/2 ISO 083 58 GLIEDER | CADENA 1/2 ISO 083 58 ESLABNEL |

TAV. 66/330

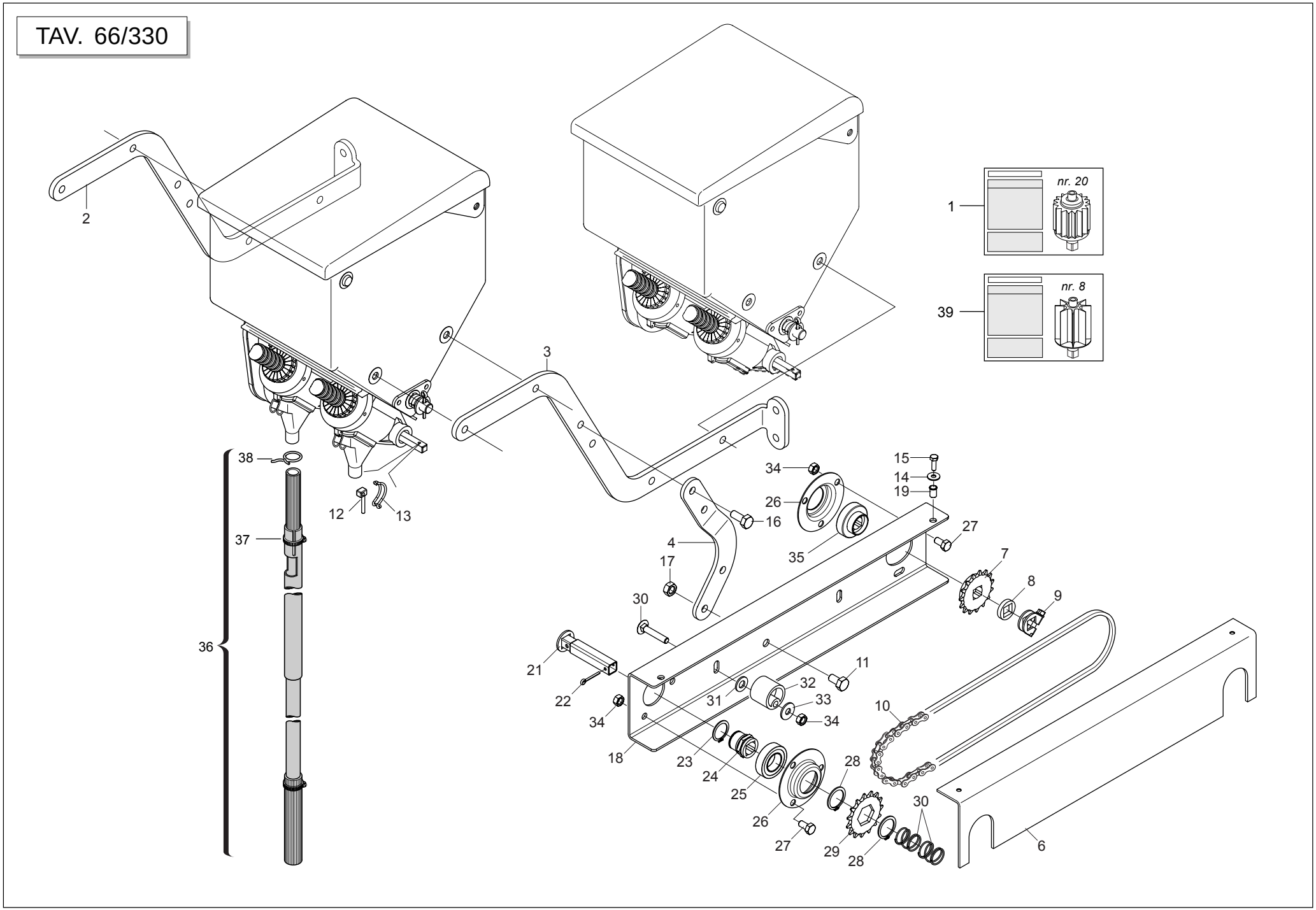




GASPARDO

## *APPLICAZIONE DOPPIO MICROGRANULATORE*

TAV. 66/330

| Pos. | Cod. | Descrizione | Description | Description | Benennung | Descripcion |
|---|---|---|---|---|---|---|
| 1 | 19704980 | DECAL.TAB.DISTRIB.UMOSTART 20P | UMOSTART DISTRIBUTOR CHART 20P | TABLEAU DISTRIBUTEUR UMOSTART | TABELLE SZAPPARAT UMOSTART 20P | TABLA DISTRIBUDOR UMOSTART 20P |
| 1 | 19705000 | DECAL.TAB.DISTRIB.LUMACHIC.20P | DISTRIBUTOR CHART 20P | TABLEAU DISTRIBUTEUR 20P | TABELLE SZAPPARAT 20P | TABLA DISTRIBUDOR 20P |
| 2 | 15274600 | SUPPORTO SX LUMACHICIDA | LEFT SUPPORT | SUPPORT GCH | HALTERUNG LI | SOPORTE IZQ |
| 3 | 15274610 | SUPPORTO DX LUMACHICIDA | RIGHT SUPPORT | SUPPORT DRT | HALTERUNG RE | SOPORTE DER |
| 4 | 15274621 | ATTACCO SUPPORTO CATENA | CHAIN SUPPORT COUPLING | FIXATION SUPPORT CHAINE | KUPPLUNG HALTERUNG | CONEXIN SOPORTE CADENA |
| 5 | 15273061 | TRASMISSIONE LUMACHICIDA COMPL | COMPL. TRANSMISSION | TRANSMISSION COMPL. | ANTRIEB KOMPL. | TRANSMISION COMPL |
| 6 | 15273051 | CARTER SUPPORTO CATENA | SUPPORT CHAIN CASING | CARTER SUPPORT CHAiNE | KETTENHALTERUNGSGEHZUSE | CARTER SOPORTE CADENA |
| 7 | 22250028 | PIGNONE Z-15 SV | Z-15 PINION SV | PIGNON Z-15 SV | RITZEL Z-15 SV | PI¾N Z-15 SV P |
| 8 | 66248218 | RONDELLA DISTAN.SPAND. | MAN. SPR. SPACER WASHER | RONDELLE ENTRETOISE EP. ENGRAI | ABSTANDSCHEIBE DsNGERSTREUER | ARANDELA DISTAN.ABONAD. |
| 9 | 22505085 | FERMO ASSE IN LAMIERA | PLATE AXLE STOP | ARRET AXE EN TOLE | FESTSTELLVORRICHTUNG BLECHACHS | BLOQUEO EJE DE CHAPA |
| 10 | F06080047 | SPEZ.CAT.1/2 ISO 083 88 MAGLIE | CUT-DOWN CHAIN 1/2 ISO 083 88 | TR. CH. ® ISO 083 88 MAILLES | KETTENLZNGE 1/2 ISO 083 88 GL | CADENA 1/2 ISO 083 88 ESLABONE |
| 11 | F01020470 | VITE 10X20 5739 8.G ZN | BOLT 10X20 5739 8.G GALVANIZED | VIS 10X20 5739 8.G ZN | SCHRAUBE 10X20 5739 8.G ZN | TORNILLO 10X20 5739 8.G ZN |
| 12 | F02200452 | SPINA A SCATTO D.4,4 B/80 | SNAP PIN D.4-4 B/80 | FICHE A DETENTE D. 4-4 B/80 | EINRASTSTIFT D 4-4 B/80 | CLAVIJA DE MUELLE D.4-4 B/80 |
| 13 | 65336084 | MOLLA SPEC.ZN AGITAT.DISTR.SV | SPEC SPRINGZN DISTR. STIRRER . | RESSORT SPEC. ZN AGITATEUR DIS | SPEZIALFEDER ZN SAMENMISCHER S | MUELLE ESPEC. ZN AGITAD. DISTR |
| 14 | F01410037 | RONDELLA D6 UNI 6592 ZN | WASHER D6 UNI 6592 GALVANIZED | RONDELLE D6 UNI 6592 ZN | UNTERLEGSCHEIBE D6 UNI 6592 ZN | ARANDELA D6 UNI 6592 ZN |
| 15 | F01020403 | VITE 6 X16 5739 8.G ZN | BOLT 6X16 5739 8.G GALVANIZED | VIS 6X16 5739 8.G ZN | SCHRAUBE 6X16 5739 8.G ZN | TORNILLO 6X16 5739 8.G ZN |
| 16 | F01020472 | VITE 10X25 5739 8.G ZN | BOLT 10X25 5739 8.G GALVANIZED | VIS 10X25 5739 8.G ZN | SCHRAUBE 10X25 5739 8.G ZN | TORNILLO 10X25 5739 8.G ZN |
| 17 | F01200270 | DADO 10 5588 6.8 ZN | SCREW 10 UNI 5588 6.8 GALVANIZ | ECROU 10 UNI 5588 6.8 ZN | MUTTER 10 UNI 5588 6.8 ZN | TUERCA 10 UNI 5588 6.8 ZN |
| 18 | 15273041 | SUPPORTO CATENA | CHAIN SUPPORT | SUPPORT CHAINE | KETTE HALTERUNG | SOPORTE CADENA |
| 19 | F02250680 | INSERTO FILETTATO M 6 X13 ZN | THREADED INSERT M6X13 ZN | PIECE INTERC.FILETEE M 6X13ZN | GEWINDEEINSATZ M 6 X 13 ZN | ENCASTRE ROSCADO M 6 X13 ZN |
| 20 | F01060047 | VITE 8 X45 5732 4.6 ZN | BOLT 8X45 5732 4.6 GALVANIZED | VIS 8X45 5732 4.6 ZN | SCHRAUBE 8X45 5732 4.6 ZN | TORNILLO 8X45 5732 4.6 ZN |
| 21 | 15274640 | MANICOTTO DISGIUNTORE | UNCOUPLING SLEEVE | MANCHON DEBRAYAGE | MUFFE AUSKUPPLUNG | MANGUITO DESCONEXIËN |
| 22 | F02200163 | COPIGLIA 3 X25 1336 ZN | SPLIT PIN 3 X25 1336 GALVAN. | GOUPILLE 3 X25 1336 ZN | SPLINT 3 X25 1336 ZN | PASADOR 3 X25 1336 ZN |
| 23 | F02050613 | ANELLO ARR.25 UNI 7435-75 | STOP RING 25 UNI 7435-75 | BAGUE DE SERRAGE 25 UNI 7435-7 | DRAHTSPRENGRING 25 UNI 7435-75 | ANILLO PARADA 25 UNI 7435-75 |
| 24 | 22250441 | MOZZO CORONA SEMINATORE SV/2 | PLANTING UNIT CROWN HUB SV/2 | MOYEU COURONNE SEMEUR SV/2 | KRANZNABE SZELEMENT SV/2 | CUBO CORONA SEMBRADOR SV/2 |
| 25 | F04010134 | CUSCINETTO 6005 2Z | BEARING 6005 2Z | PALIER 6005 2Z | LAGER 6005 2Z | COJINETE 6005 2Z |
| 26 | 22230094 | SUPPORTO CUSCINETTO | BEARING SUPPORT | SUPPORT PALIER | LAGERBsCHSE | SOPORTE COJINETE |
| 27 | F01020432 | VITE 8 X16 5739 8.G ZN | BOLT 8X16 5739 8.G GALVANIZED | VIS 8X16 5739 8.G ZN | SCHRAUBE 8X16 5739 8.G ZN | TORNILLO 8X16 5739 8.G ZN |
| 28 | F02050615 | ANELLO ARR.28 UNI 7435-75 | STOP RING 28 UNI 7435-75 | BAGUE DE SERRAGE 28 UNI 7435-7 | DRAHTSPRENGRING 28 UNI 7435-75 | ANILLO PARADA 28 UNI 7435-75 |
| 29 | 22250190 | CORONA ASSE SEMINAT.Z-15 SV | PLANTING UNIT AXLE Z-15 RING G | COURONNE AXE SEMEUR Z-15 SV | KRANZ SZELEMENTACHSE Z-15 SV | CORONA EJE SEMBR. Z-15 SV |
| 30 | 65338022 | MOLLA COMP.ZN CHIAVISTELLO FR | ZN LATCH COMP. SPRING FR | RESSORT COMPL. ZN VERROU FR | DRUCKFEDER ZN RIEGEL FR | MUELLE COMP.ZN PESTILLO FR |
| 31 | F01410064 | RONDELLA D10 UNI 6592 ZN | WASHER D10 UNI 6592 GALVANIZED | RONDELLE D10 UNI 6592 ZN | UNTERLEGSCHEIBE D10 UNI 6592 Z | ARANDELA D10 UNI 6592 ZN |
| 32 | 66248207 | TENDICATENA SPAND. SP-520 | CHAIN TENSIONER | TENDEUR DE CHAINE EPAND. ENGR. | KETTENSPANNER DsNGERSTR. SP-52 | TENSOR DE CADENA ABON. SP-520 |
| 33 | F01420048 | ROND.PIANA 9X 24X2 6593 ZN | FLAT WASHER 9X 24X2 6593 GALV. | ROND. PLATE 9X 24X2 6593 ZN | SCHEIBE 9X 24X2 6593 ZN | ARAND. PLANA 9X 24X2 6593 ZN |
| 34 | F01200244 | DADO 8 5588 6.8 ZN | NUT 8 UNI 5588 6.8 GALVANIZED | ECROU 8 UNI 5588 6.8 ZN | MUTTER 8 UNI 5588 6.8 ZN | TUERCA 8 UNI 5588 6.8 ZN |
| 35 | 14830390 | CUSCINETTO FORO QUADRO | SQUARE-HOLED BEARING | ROULEMENT AL+SAGE CARR+ | VIERKANTLAGER | COJINETE ORIFICIO CUADRADO |
| 36 | 11425111 | TUBO DISCESA LUMACHICIDA COMPL | PIPE DESCENT | TUBE DESCENTE COMPL. | SENKROHR KOMPL. | TUBO DESCENSO COMPL. |
| 37 | F02300016 | FASCETTA STRING.16/27 | STRING FASTENING STRAPS .16/27 | COLLIER DE SERRAGE 16/27 L | ROHRSCHELLE .16/27 L | ABRAZADERA APRET.16/27 L |
| 38 | 65336041 | MOLLA SPEC.ZN STRINGITUBO M80 | SPEC.SPRING ZN . PIPE CLAMP M8 | RESSORT SPEC. ZN SERRE-TUBE M8 | SPEZIALFEDER ZN ROHRSCHELLE M8 | MUELLE ESPEC. ZN APLASTA TUBOS |
| 39 | 19704970 | DECAL.TAB.DISTRIB.UMOSTART 8P. | UMOSTART DISTRIBUTOR CHART 8P | TABLEAU DISTRIBUTEUR UMOSTART | TABELLE SZAPPARAT UMOSTART 8P | TABLA DISTRIBUDOR UMOSTART 8P |
| 39 | 19704990 | DECAL.TAB.DISTRIB.LUMACHIC.8P. | DISTRIBUTOR CHART 8P | TABLEAU DISTRIBUTEUR 8P | TABELLE SZAPPARAT 8P | TABLA DISTRIBUDOR 8P |

TAV. 66/211

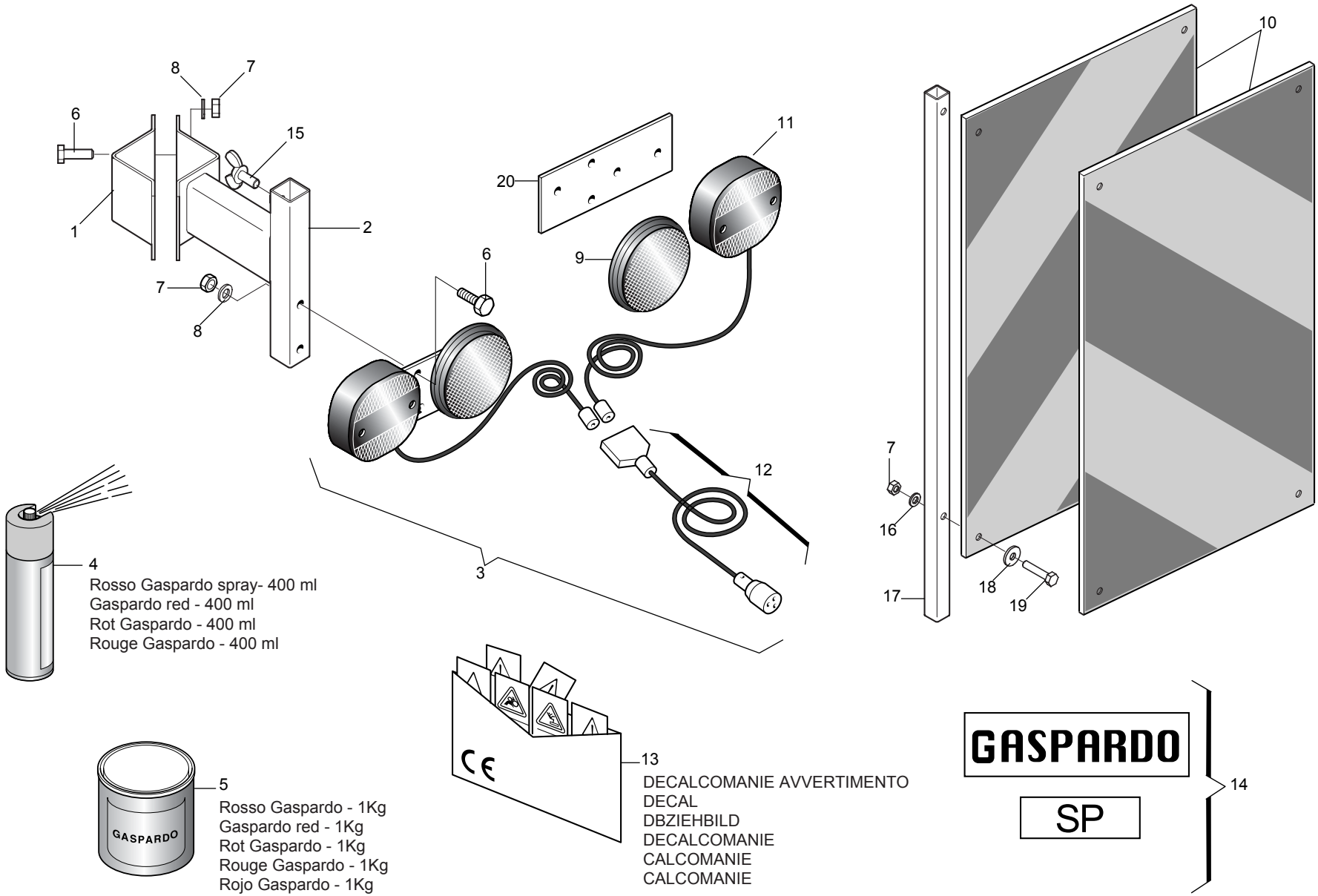
1
2
3
4
Rosso Gaspardo spray- 400 ml
Gaspardo red - 400 ml
Rot Gaspardo - 400 ml
Rouge Gaspardo - 400 ml
5
Rosso Gaspardo - 1Kg
Gaspardo red - 1Kg
Rot Gaspardo - 1Kg
Rouge Gaspardo - 1Kg
Rojo Gaspardo - 1Kg
GASPARDO
6
7
8
9
10
11
12
13
DECALCOMANIE AVVERTIMENTO
DECAL
DBZIEHBILD
DECALCOMANIE
CALCOMANIE
CALCOMANIE
CE
14
GASPARDO
SP
15
16
17
18
19
20

## *ACCESSORI*

TAV. 66/211

| Pos. | Cod. | Descrizione | Description | Description | Benennung | Descripcion |
|---|---|---|---|---|---|---|
| 1 | 15411260 | FORCELLA LUCI ZN | OPENING FORK ZN | FOURCHE FEUX ZN | LICHTERGABEL ZN | HORQUILLA LUCES ZN |
| 2 | 15412640 | SUPPORTO KIT LUCI POST. | REAR LIGHT SUPPORT KIT | SUPPORT KIT FEUX ARRI+RE | HALTERUNG KIT HINT. LICHTER | SOPORTE KIT LUCES POST. |
| 3 | 13616620 | KIT LUCI PER MACCHINE PORTATE | LIGHT KIT FOR MOUNTED MACHINE | KIT FEUX POUR MACHINES PORT+ES | KIT LICHTER F_R FÍRDERMASCHINE | KIT LUCES PARA M-QUINAS SUSPEN |
| 4 | F03200250 | SPRAY ROSSO GASPARDO DA 400 ML | GASPARDO RED SPRAY- 400ML | PULVERISATEUR ROUGE GASPARDO 4 | ROTES SPRAY GASPARDO 400 ML | SPRAY ROJO GASPARDO DE 400 ML |
| 5 | F03200244 | ROSSO GASPARDO BARATTOLO KG 1 | GASPARDO RED - 1 KG DRUM | VERNIS ROUGE 1 KG | GASPARDO ROT I-KG-DOSE | ROJO GASPARDO LATA 1 KG |
| 6 | F01020403 | VITE 6 X16 5739 8.G ZN | BOLT 6X16 5739 8.G GALVANIZED | VIS 6X16 5739 8.G ZN | SCHRAUBE 6X16 5739 8.G ZN | TORNILLO 6X16 5739 8.G ZN |
| 7 | F01220211 | DADO TRISTOP M 6 | NUT- TRISTOP M 6 | ECROU TRISTOP M 6 | MUTTER TRISTOP M 6 | TUERCA TRISTOP M 6 |
| 8 | F01430047 | RONDELLA D6 DIN 6798 D.INT.ZN | WASHER D6 DIN 6798 D.INT.GALV. | RONDELLE D6 DIN 6798 D. INT. Z | UNT. SCHEIBE D6 DIN 6798 D. IN | ARANDELA D6 DIN 6798 D.INT.ZN |
| 9 | F05010221 | CATARIFRANGENTE TONDO D.80 > | D.80 ROUND REFLECTOR | CATADIOPTRE ROND D.80 | RUNDER R_CKSTRAHLER D.80 | PAPEL REFRACTARIO REDONDO D.80 |
| 10 | F05010357 | N.2 PANNELLI CARICHI SPORGENTI | N[ JUTTING LOAD PANELS | N. 2 PANNEAUX CHARGES SAILLANT | N.2 TAFELN VORSPRINGENDE LADUN | 2 PANELES CARGADOS SALIENTES |
| 11 | F05010076 | FANALE PER KIT LUCI | LAMP KIT LIGHTS COMPL. | FEU KIT ECLAIRAGE COMPL. | LAMPEN KIT LICHT KOMPL. | FAROL SET LUCES COMPL. |
| 12 | F05010080 | CABLAGGIO KIT LUCI | LIGHT WIRING HARNESS | CABLAGE KIT PHARES | VERKABELUNG LAMPENKIT | CABLEADO JUEGO LUCES |
| 13 | 89900500 | KIT DECALCOMANIE -CE- | DECAL KIT -CE- | KIT DECALCOMANIE -CE- K | IT ABZIEHB. -CE- S | ET CALCOMANAS -CE- |
| 14 | 89900510 | KIT DECALCOM.ST250-300-MTE | DECAL KIT ST250-300-MTE | KIT DECALCOM.ST250-300-MTE | KIT ABZIEHB. ST250-300-MTE | SET CALCOM.ST250-300-MTE |
| 15 | F01090215 | VITE 8 X15 5449 5.8 ZN | BOLT 8X15 UNI 5449 5.8 GALVANI | VIS 8X15 UNI 5449 5.8 ZN | SCHRAUBE 8X15 UNI 5449 5.8 ZN | TORNILLO 8X15 UNI 5449 5.8 ZN |
| 16 | F01410037 | RONDELLA D6 UNI 6592 ZN | WASHER D6 UNI 6592 GALVANIZED | RONDELLE D6 UNI 6592 ZN | UNTERLEGSCHEIBE D6 UNI 6592 ZN | ARANDELA D6 UNI 6592 ZN |
| 17 | 15412650 | TUBO Q. 16X1,5X643 ZN | GALVAN. SQUARE 16X1,5X643 | TUBE CARRE 16X1,5X643 ZN | ROHR Q. 16X1,5X643 ZN | TUBO CUADRADO 16X1,5X643 ZN |
| 18 | F01420036 | ROND.PIANA 6,6X 18X2 6593 ZN | FLAT WASHER 6-6X 18X2 6593 ZN | ROND. PLATE 6-6X 18X2 6593 ZN | SCHEIBE 6-6X 18X2 6593 ZN | ARAND. PLANA 6-6X 18X2 6593 ZN |
| 19 | F01020408 | VITE 6 X30 5739 8.G ZN | BOLT 6X30 5739 8.G GALVANIZED | VIS 6X30 5739 8.G ZN | SCHRAUBE 6X30 5739 8.G ZN | TORNILLO 6X30 5739 8.G ZN |
| 20 | 13616570 | PIASTRA SUPP.LUCI | LIGHTS SUPPORT PLATE | PLAQUE DE SUPPORT ECLAIRAGE | LICHTERHALTERUNGSPLATTE | PLACA SOPORTE LUCES |

**USATE SEMPRE RICAMBI ORIGINALI**
***ALWAYS USE ORIGINAL SPARE PARTS***
**IMMER DIE ORIGINAL-ERSATZTEILE VERWENDEN**
***EMPLOYEZ TOUJOURS LES PIECES DE RECHANGE ORI*GINALES**
**UTILIZAR SIEMPRE REPUESTOS ORIGINALES**

# GASPARDO

GASPARDO

*19530195*


**GASPARDO Seminatrici SpA**
Via Mussons, 7 - I - 33075
Morsano al Tagliamento (PN) Italy
Tel. +39 0434 695410
Fax +39 0434 695425
e-mail: gaspardo@gaspardo.it
http://www.gaspardo.it

**MASCHIO DEUTSCHLAND GMBH**
Äußere Nürmberger Straße 5
D - 91177 Thalmässing
Deutschland
Tel. +49 (0) 9173 79000
Fax +49 (0) 9173 790079

**MASCHIO FRANCE Sarl**
1, Rue de Mérignan ZA
F - 45240 La Ferte St. Aubin
France
Tel. +33 (0) 2.38.64.12.12
Fax +33 (0) 2.38.64.66.79

**MASCHIO IBERICA S.L.**
Calle Cabernet, 10
Poligono Industrial Clot de Moja
Olerdola - 08734 Barcelona
Tel. +34 93.81.99.058
Fax +34 93.81.99.059

**MASCHIO USA**
432 2ND Street
Rock Island, IL 612Ø1 USA
Ph. +1 309 794-2310
Fax +1 309 788-1610

**MASCHIO MIDDLE EAST S.L**
**MASCHIO-GASPARDO ROMANIA S.R.L.**
**GASPARDO-MASCHIO TURCHIA**
**MASCHIO-GASPARDO CANADA Inc**



Ufficio Tecnico GASPARDO Seminatrici S.p.A.