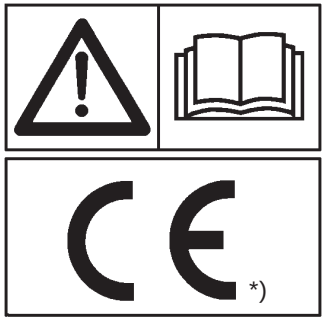

GASPARDO

MASCHIO GASPARDO S.p.A.

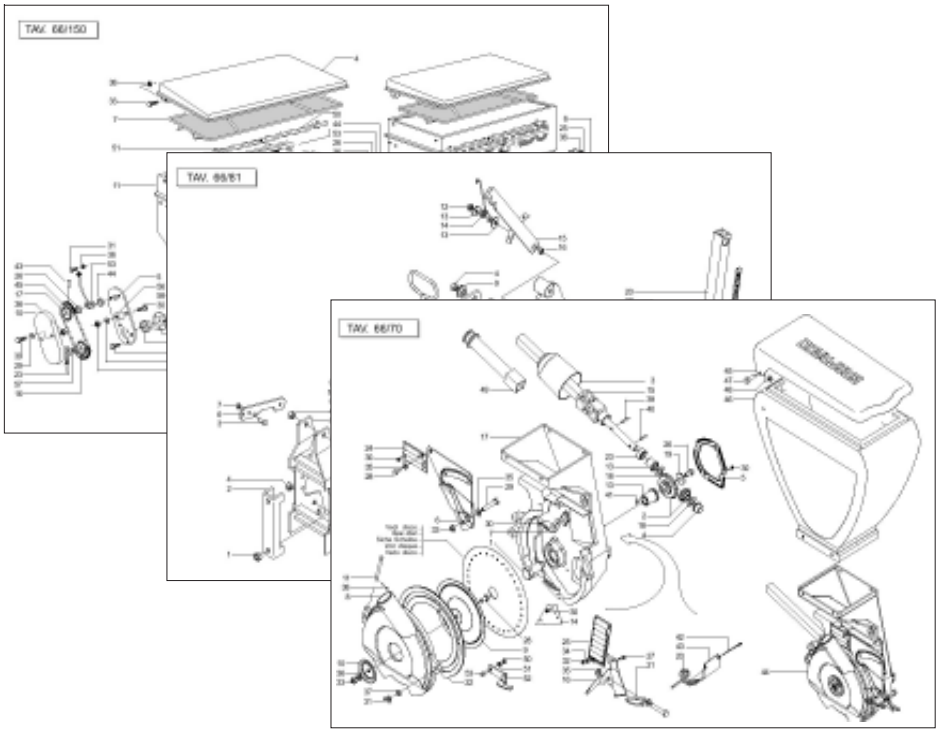

SI

Cod: G19530286 12.2007

*) Valido per Paesi UE
*) Valid for EU member countries
*) Valable dans les Pays UE
*) Gilt für EU-Mitgliedsländer
*) Válido para Países UE

IT PARTI DI RICAMBIO
EN *SPARE PARTS*
DE ERSATZTEILE
FR *PIECES DÉTACHÉES*
ES PIEZAS DE REPUESTO

ITALIANO

PARTI DI RICAMBIO

Le ordinazioni delle parti di ricambio vanno fatte presso i nostri concessionari di zona e devono essere sempre corredate dalle seguenti indicazioni:

- **Tipo, modello e numero di matricola dell'attrezzatura.** Tali dati sono stampigliati nell'apposita targhetta di cui è dotata ogni attrezzatura.

- **Numero di codice della parte richiesta** rilevabile dal catalogo ricambi.

- **Descrizione del particolare e quantità richiesta.**

- **Numero della tavola.**

- **Mezzo di trasporto.** Nel caso questa voce non sia specificata, la Ditta Costruttrice, pur dedicando a questo servizio una particolare cura, non risponde di eventuali ritardi di spedizione dovuti a cause di forza maggiore.
Le spese di trasporto si intendono sempre a carico del destinatario. La merce viaggia a rischio e pericolo del committente anche se venduta franco destino.

NOTA: Il termine (**Dx**) **Destro** o (**Sx**) **Sinistro** della macchina o di parti di essa, è inteso guardando la macchina dalla parte posteriore. Le eccezioni saranno indicate.

ENGLISH

SPARE PARTS

Orders must be transmitted through our area dealers and should always include the following indications:

- ***Type, model and serial number of the machine.*** *These data are punched on the data plate with which every implement is equipped.*

- ***Code number of the required spare part.*** *This will be found in the spare parts catalogue.*

- ***Description of the part and required quantity.***

- ***Table number.***

- ***Means of dispatch.*** *If this item is not indicated, the Manufacturer, while dedicating particular care to this service, shall not be held responsible for delays in delivery caused by cases of force majeure.*
Transport expenses shall always be at the consignee's charge. The goods travel at the purchaser's risk and peril even when sold ex destination.

NOTE: *The symbols (**Dx**) **right** and (**Sx**) **left**, concerning the machine or single parts of it, are referred, as in the figure, to a rear view of them. Exceptions will be indicated.*

DEUTSCH

ERSATZTEILE

Die Bestellungen müssen bei unseren Gebietshändrer aufgegeben werden. Bei der Bestellung sind stets die folgenden Angaben zu machen:

- **Typ, Modell und Serien-Nummer des Geräts**. Diese Daten stehen auf dem Typenschild, mit dem jedes Gerät versehen ist.

- **Artikel Nr. der erforderlichen Ersatzteile.** Diese stehen im Ersatzteil-Katalog.

- **Beschreibung des Ersatzteils und die erforderliche Stückzahl.**

- **Tafelnummer.**

- **Versandmittel.** Wenn dieser Punkt nicht spezifiziert wird, haftet die Herstellerfirma nicht für etwaigen Lieferverzug aufgrund höherer Gewalt, auch wenn er diesen Service besonders aufmerksam abwickelt.
Die Frachtkosten gehen dagegen immer zu Lasten des Empfängers. Die Ware reist auf Gefahr und Risiko des Auftraggebers, auch wenn frei Haus Verkauft vereinbart worden ist.

N.B.: Die Merkzeichen (**Dx**) **rechts** und (**Sx**) **links** betreffen eine rückwärtige Aussicht der Maschine oder Teile von ihr (siehe Bild). Ausnahmen werden gezeigt.

FRANÇAIS

PIECES DÈTACHÈES

Les ordres doivent être effectués auprés de nos concessionaires de zone en précisant les indications suivantes:

- ***Type, modéle et numéro de série de la machine****. Ces données sont gravées sur la plaque d'identification de chaque outil.*

- ***Numéro de code de la piéce détachée*** *indiqué sur le catalogue des piéces détachées.*

- ***Description de la piéce et quantité requise****.*

- ***Numéro de plan****.*

- ***Moyen d'expédition****. Si cette rubrique n'est pas indiquée, le Constructeur, bien que soucieux de ce service, ne répond pas des retards d'expédition pour des causes de force majeure.*
Les frais de transport sont toujours à la charge du destinataire. La marchandise voyage aux risques et périls de l'acheteur même si vendue franco de port.

N.B.: *Les références (**Dx**) **droit** et (**Sx**) **gauche** de la machine ou des parties de la même, est entendue, comme de la figure, en regardant la machine de derriere dans le sens de marche.*

ESPAÑOL

RESPUESTOS

Los pedidos han de efectuarse en nuestros consesionarios de zona y deben incluir siempre las siguientes indicaciones:

- **Tipo, modelo y número de matrícula del equipo**. Dichos datos están impresos en la relativa placa presente en el equipo.

- **Número de código de la parte requerida** presente en el catálogo respuestos.

- **Descripcíon de la pieza y cantidad requerida**.

- **Numero de illustración**.

- **Medio de transporte**. En caso que este ítem no esté especificado, el Fabricante, aún prestando la debidas consideraciones para este aspecto, no responde por eventuales retardos de env'o debidos a causas de fuerza mayor.
Los gastos de transporte se consideran siempre a cargo del destinatario. La mercandería viaja bajo riesgo y peligro del comprador, incluso cuando se vende franco destino.

N.B.: La refencia (**Dx**) **derecha** o (**Sx**) **izquierda** de la máquina o de sus componentes, se entiende, como en la figura, mirando la máquina por la parte trasera. Se indicarán las excepciones.

N° Tavola	Descrizione	Pagina
TAV. 014	Telaio SI	4
TAV. 024	Telaio SI TC	6
TAV. 031	Impianto telaio	8
TAV. 293	Segnafile con traccia centro trattore	10
TAV. 312	Segnafile con traccia su ruota trattore	15
TAV. 300	Impianto segnafile per traccia centro trattore	14
TAV. 320	Impianto generale con centralina	16
TAV. 074	Depressore	18
TAV. 081	Supporti depressore	30
TAV. 094	Scatola di rinvio elemento	22
TAV. 104	Distributore semi	24
TAV. 260	Dischi di semina	26
TAV. 113	Telaio elemeto	28
TAV. 124	Elementi assolcatori	30
TAV. 134	Ruote di compressione	32
TAV. 142	Bilanciere	34
TAV. 273	Esclusione elettrica file di semina	36
TAV. 155	Cambio	38
TAV. 165	Ruote di trasmissione	40
TAV. 241	Presa di potenza posteriore	44
TAV. 283	Kit flangiatura ruote per terreni sassosi	46
TAV. 171	Supporti serbatoi spandiconcime plastica	48
TAV. 182	Serbatoi spandiconcime plastica	50
TAV. 195	Elementi di concimazione	54
TAV. 233	Speedy set	56
TAV. 205	Microgranulatore	58
TAV. 212	Trasmissione spandiconcime e microgranulatore	62
TAV. 251	Accessori	64
TAV. 330	Cardani	66

TAV. 014

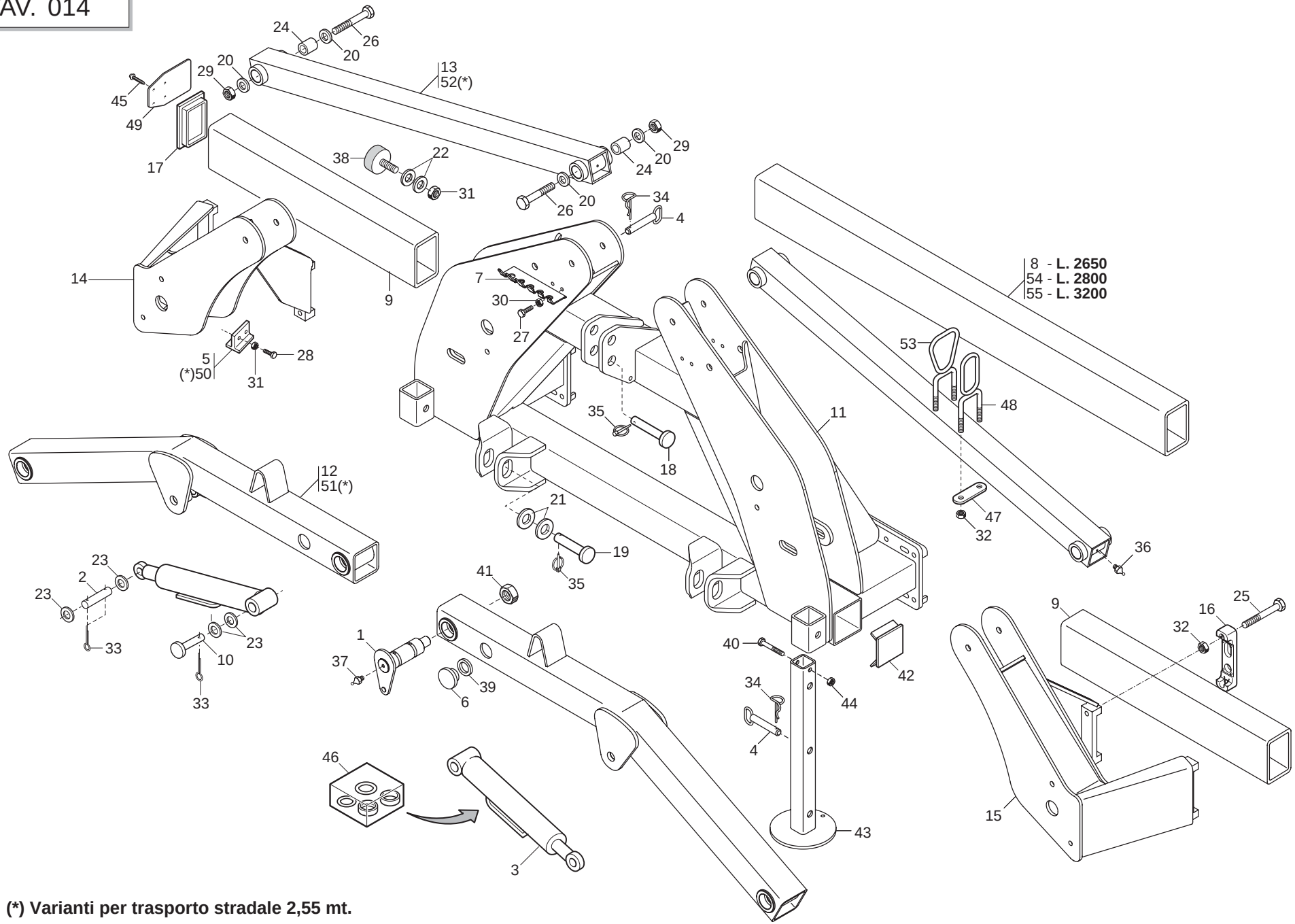

(*) Varianti per trasporto stradale 2,55 mt.

GASPARDO

TELAIO SI

TAV. 014

Pos.	Cod.	Descrizione	Description	Description	Benennung	Descripcion
1	G14217540	SPINA ROTAZIONE	ROTATION PIN	GOUPILLE ROTATION	ROTATIONSSTIFT	PASADOR ROTACI-N
2	G14215270	SPINA INFERIORE CILINDRO	BOTTOM CYLINDER PIN	GOUPILLE INFERIEURE CYLINDRE	UNTERER STIFT ZYLINDER	CLAVIJA INFERIOR CILINDRO
3	G14215302	CILINDRO DE 40X80X335	CYLINDER 40X80X335	CYLINDRE 40X80X335	ZYLINDER 40X80X335	CILINDRO 40X80X335
4	G14215360	SPINA DI SICUREZZA	SHEAR PIN	GOUPILLE DE SURETE	SICHERHEITSSTIFT	CLAVIJA DE SEGURIDAD
5	G14215570	FERMO TELAIO MOBILE	MOBILE FRAME STOP	ARRET BATI MOBILE	FESTSTELLVORRICHTUNG MOBILER R	BLOQUEO BASTIDOR MVIL O
6	G19003570	PIASTRA SCORRIMENTO SP.11	SLIDING PLATE SP.11	PLAQUE GLISSEMENT SP.11	GLEITPLATTE SP.11	PLACA DE DESPLAZAMIENTO SP.11
7	G14217560	SUPPORTO 5 TUBI	PIPE SUPPORT	SUPPORT TUBES	ROHRHALTERUNG	SOPORTE TUBOS
8	G14217260	TUBO R.150X100X 6X2650	RECTANGULAR PIPE 150X100X 6X26	TUBE RECT. 150X100X 6X2650	R. ROHR 150X100X 6X2650	TUBO RECT. 150X100X 6X2650
9	G14217270	TUBO R.150X100X 6X1480	RECTANGULAR PIPE 150X100X 6X14	TUBE RECT.150X100X 6X1480	R. ROHR 150X100X 6X1480	TUBO RECT. 150X100X 6X1480
10	G14217470	SPINA INFERIORE CILINDRO ZN	BOTTOM CYLINDER PIN	GOUPILLE INFERIEURE CYLINDRE	UNTERER STIFT ZYLINDER	CLAVIJA INFERIOR CILINDRO
11	G14216557	ASS.TELAIO PORTANTE SI-MTI				
12	G14216613	BRACCIO INFERIORE	LOWER ARM	BRAS INFERIEUR	UNTERER ARM	BRAZO INFERIOR
13	G14216641	BRACCIO SUPERIORE	TOP ARM	BRAS SUPERIEUR	OBERER ARM	BRAZO SUPERIOR
14	G14216713	SUPPORTO TELAIO MOBILE DX	RIGHT MOBILE FRAME SUPPORT	SUPPORT BATI MOBILE DRT	HALTERUNG MOBILER RAHMEN RE	SOPORTE BASTIDOR MVIL DER
15	G14216723	SUPPORTO TELAIO MOBILE SX	LEFT MOBILE FRAME SUPPORT	SUPPORT BATI MOBILE GCH	HALTERUNG MOBILER RAHMEN LI	SOPORTE BASTIDOR MVIL IZQ
16	G19204030	SCONTRO FISS.150 2F D15				
17	G15211571	TAPPO TUBO 150X100	PLUG PIPE 150X100	BOUCHON TUBE 150X100	ROHRPFROPFEN 150X100	TAPON TUBO 150X100
18	F20100063	PERNO D25 L113 C40 ZN	PIN GASPARDO D25 L113 C40	PIVOT GASPARDO D25 L113 C40	BOLZEN GASPARDO D25 L113 C40	PERNO GASPARDO D25 L113 C40
19	F20100074	SPINA 1°-2° PUNTO ZN	PIN FOR BAR LINKAGE	GOUJON ATTELAGE BARRE	VERB.BOLZEN SCHUTZHOLM	PERNO ATAQUE BARRA
20	G20970043	RONDELLA 50X8X20,5 ZN	WASHER 50X8X20-5	RONDELLE 50X8X20-5	UNTERLEGSCHEIBE 50X8X20-5	ARANDELA 50X8X20-5
21	G20970120	RONDELLA 70X8X28,5	WASHER 70X8X28-5	RONDELLE 70X8X28-5	UNTERLEGSCHEIBE 70X8X28-5	ARANDELA 70X8X28-5
22	G18701530	RONDELLA 13X48X4 ZN	WASHER 13X48X4 ZN	RONDELLE 13X48X4 ZN	UNTERLEGSCHEIBE 13X48X4 ZN	ARANDELA 13X48X4 ZN
23	G18701580	RONDELLA 30,5 X76 X4	WASHER 30.5 X 76 X 6	RONDELLE 30-5 X78 X6	UNTERLEGSCHEIBE 30-5 X78 X6	ARANDELA 30-5 X78 X6
24	G18801380	BOCCOLA 20,25X40 X121	BUSHING 20.25 X 40 X 121	BOITE 20-25X40 X121	BsCHSE 20-25X40 X121	CASQUILLO 20-25X40 X121
25	F01020225	VITE M14X 2X160 U5737 8.8 BR	BOLT M 14 X160 5737 8.G	VIS M 14 X160 5737 8.G	SCHRAUBE M 14 X160 5737 8.G	TORNILLO M 14 X160 5737 8.G
26	F01020322	VITE M20X2,5X190 U5737 10.9 ZD	BOLT 20X190 5737 8.8 GALVANIZ.	VIS 20X190 5737 8.8 ZN	SCHRAUBE 20X190 5737 8.8 ZN	TORNILLO 20X190 5737 8.8 ZN
27	F01020476	VITE M10X 1,5X30 U5739 8.8 ZN	BOLT M 10X30	VIS M 10X30	SCHRAUBE M 10X30	TORNILLO M 10X30
28	F01020510	VITE M12X1,75X30 U5739 8.8 ZN	BOLT M 12X30	VIS M 12X30	SCHRAUBE M 12X30	TORNILLO M 12X30
29	F01230131	DADO M20X 2,5 D982 6 ZN	NUT M20X 2,5 D982 6 ZB	ECRO.M20X 2,5 D982 6 ZB	MUTT.M20X 2,5 D982 6 ZB	TUER.M20X 2,5 D982 6 ZB
30	F01200270	DADO M10X 1,5 U5588 6.8 ZN	NUT M10	ECROU M10	MUTTER M10	DADO M10
31	F01200293	DADO M12X1,75 U5588 6.8 ZN	NUT M12	ECROU M12	MUTTER M12	DADO M12
32	F01200306	DADO M14X 2 U5588 6.8 ZN	NUT M14X2	ECROU M14X2	MUTTER M14X2	DADO M14X2
33	F02200246	COPIGLIA 6X 45 U1336 ZN	SPLIT PIN 6 X45 1336 GALVAN.	GOUPILLE 6 X45 1336 ZN	SPLINT 6 X45 1336 ZN	PASADOR 6 X45 1336 ZN
34	F02200374	COPIGLIA R 4X 82 ZN	SPLIT PIN 5X100	GOUPILLE 5X100	SPLINT 5X100	PASADOR 5X100
35	F02200507	SPINA SCATTO D. 9 B/83 ZN	SNAP PIN D 9 B/83	FICHE A DETENTE D 9 B/83	EINRASTSTIFT D 9 B/83	CLAVIJA DE MUELLE D 9 B/83
36	F01100011	ING.M 6X1 7663-A 9SMNPB28 ZN	SPHERE NIPPLE M6X1/A	GRAISSEUR A BILLES M6X1/A	KUGELFETTBsCHSE M6X1/A	ENGRAS. DE ESFERAS M6X1/A
37	F01100061	ING.M10X1 7663-A 9SMNPB28 ZN	GREASE NIPPLE M10X1	GRAISSEUR M10X1	SCHMIERBUECHSE M10X1	ENGRASADOR M10X1
38	F05150459	PARACOLPI CIL.75X25 M12 SH70	RUBBER BUFFER- CYLINDR. 75X25	PARE-CHOCS CYL. 75X25 M12 7811	PUFFER ZYL.75X25 M12 781103	PARAGOLPES CIL.75X25 M12 78110
39	G18701770	RONDELLA 50 X90 X0,5	WASHER 50 X90 X0,5	RONDELLE 50 X90 X0,5	UNTERLEGSCHEIBE 50 X90 X0,5	ARANDELA 50 X90 X0,5
40	F01020166	VITE M12X1,75X80 U5737 8.8 ZN	BOLT 12X80 5737 8.G GALVANIZED	VIS 12X80 5737 8.G ZN	SCHRAUBE 12X80 5737 8.G ZN	TORNILLO 12X80 5737 8.G ZN
41	F01230291	DADO M30X 2 D985 ZN	SELF-LOCK NUT M30X2 DIN 985 ZN	ECROU AUTOB. M30X2 DIN 985 ZN	SELBSTSP. MU. M30X2 DIN 985 ZN	TUERCA AUTOB. M30X2 DIN 985 ZN
42	G15413210	TAPPO TELAIO 120 COMPL.				
43	G14219120	PUNTELLO	PROP	ETRESILLON	ST_TZE	PUNTAL
44	F01220048	DADO M12X1,75 D980 8 ZN	SELF LOCKING NUT M12X1,75 980V	ECROU AUTOBL. M12X1,75 980-V	SIEHE 00553312	DADO AUTOBL. M12X1,75 980-V
45	F01070078	VIT.A.4,2X1,41X 9,5 6950 4.8ZN	SELFTHREADING BOLT 4,2X13 TE	VIS AUTOTARADEUSE.4-2X13 TE	SELBSTSCHNEID. SCHRAUBE 4-2X13	TORNILLO AUTOR.4-2X13 TE
46	F03100178	KIT GUARNIZ.CILINDRO 14216770	KIT O-RING CYLINDER 15312720	KIT GARNIT. CYLINDRE 15312720	KIT DICHT.OR ZYLINDER15312720	SET JUNTA OR CILINDRO15312720
47	G22500070	SCONTRO SUPPORTO ASPIR.	STRIKER PLATE FAN SUPP.	BUTEE SUPPORT ASPIRATEUR	ABSAUGERHALTERUNGS-ANSCHLAG	ELEMENTO DE EMPALME SOPORTE AS
48	G14215951	GUIDATUBO	PIPE GUIDE	GUIDE-TUBE	ROHRFsHRUNG	GUA DE TUBO G
49	G19002770	PROTEZIONE ASSI	SPINDLE PROTECTION	PROTECTION AXES	SCHUTZ ACHSEN	PROTECCIN EJES P
50	G14218890	FERMO TELAIO	FRAME STOP	ARRET BATI	FESTSTELLVORRICHTUNG	BLOQUEO BASTIDOR
51	G14218851	BRACCIO INF.LUNGO	LOWER ARM LONG	BRAS LONG INFERIEUR	UNTERER LARGER ARM	BRAZO LARGO INFERIOR
52	G14218830	BRACCIO SUPPORTO LUNGO	LONG SUPPORT ARM COUPLING	BRAS SUPPORT LONG	LARGERALTERUNGSARM	BRAZO SOP. LARGO
53	G14217110	GUIDATUBO 3 TUBI	PIPE GUIDE - 3 PIPES	GUIDE-TUBE - 3 TUBES	ROHRF_HRUNG - 3ROHR	GUA DE TUBO - 3 TUBOS
54	G14217390	TUBO R.150X100X 6X2800	RECTANGULAR PIPE 150X100X 6X28	TUBE RECT. 150X100X 6X2800	R. ROHR 150X100X 6X2800	TUBO RECT. 150X100X 6X2800
55	G14217400	TUBO TELAIO 150X100X3200	FRAME PIPE 150X100X3200	TUBE BATI 150X100X3200	ROHR RAHMEN 150X100X3200	TUBO BASTIDOR 150X100X3200

TAV. 024

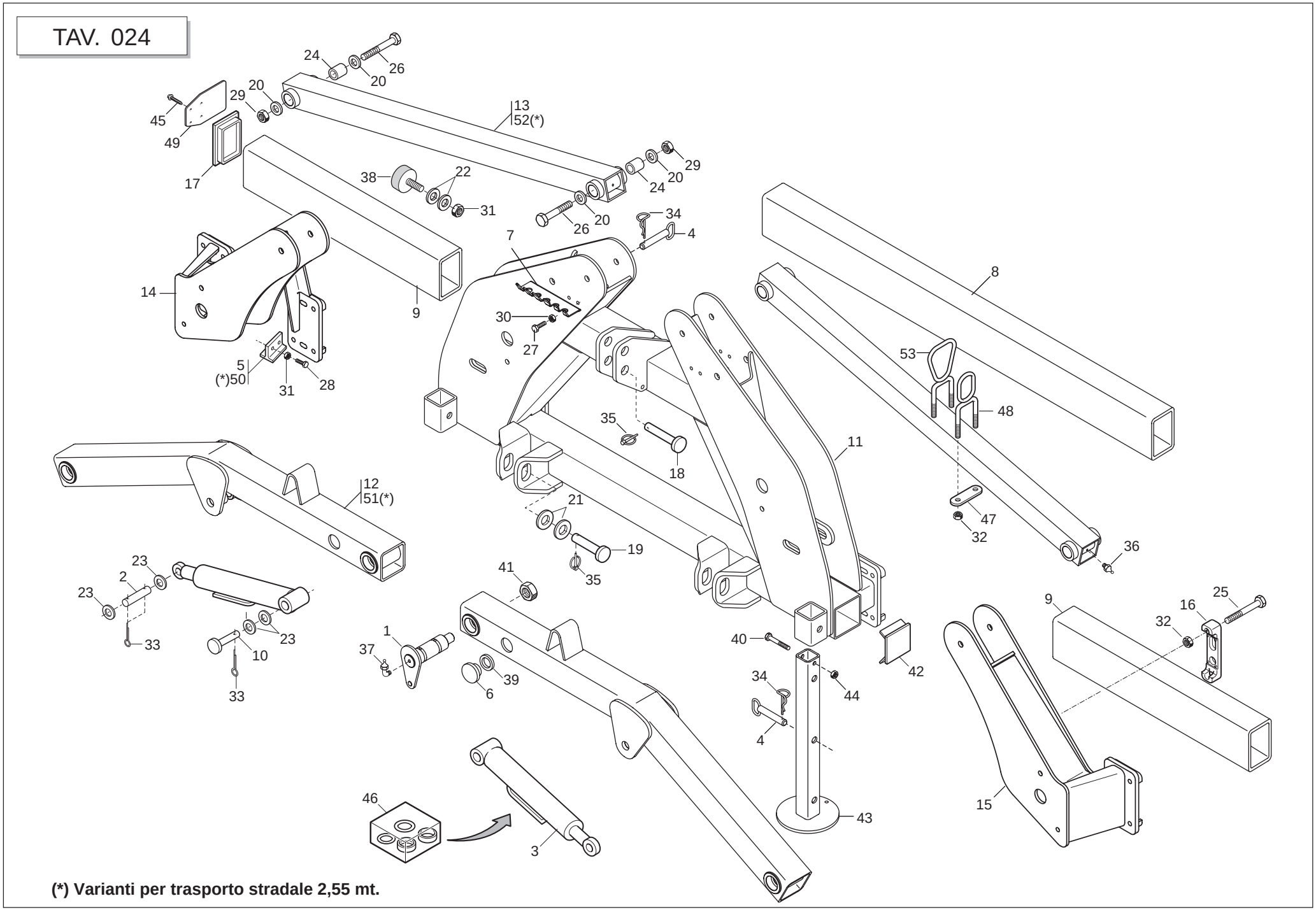

(*) Varianti per trasporto stradale 2,55 mt.

GASPARDO

TELAIO SI TC

TAV. 024

Pos.	Cod.	Descrizione	Description	Description	Benennung	Descripcion
1	G14217540	SPINA ROTAZIONE	ROTATION PIN	GOUPILLE ROTATION	ROTATIONSSTIFT	PASADOR ROTACI-N
2	G14215270	SPINA INFERIORE CILINDRO	BOTTOM CYLINDER PIN	GOUPILLE INFERIEURE CYLINDRE	UNTERER STIFT ZYLINDER	CLAVIJA INFERIOR CILINDRO
3	G14215302	CILINDRO DE 40X80X335	CYLINDER 40X80X335	CYLINDRE 40X80X335	ZYLINDER 40X80X335	CILINDRO 40X80X335
4	G14215360	SPINA DI SICUREZZA	SHEAR PIN	GOUPILLE DE SURETE	SICHERHEITSSTIFT	CLAVIJA DE SEGURIDAD
5	G14215570	FERMO TELAIO MOBILE	MOBILE FRAME STOP	ARRET BATI MOBILE	FESTSTELLVORRICHTUNG MOBILER R	BLOQUEO BASTIDOR MVIL O
6	G19003570	PIASTRA SCORRIMENTO SP.11	SLIDING PLATE SP.11	PLAQUE GLISSEMENT SP.11	GLEITPLATTE SP.11	PLACA DE DESPLAZAMIENTO SP.11
7	G14217560	SUPPORTO 5 TUBI	PIPE SUPPORT	SUPPORT TUBES	ROHRHALTERUNG	SOPORTE TUBOS
8	G14217260	TUBO R.150X100X 6X2650	RECTANGULAR PIPE 150X100X 6X26	TUBE RECT. 150X100X 6X2650	R. ROHR 150X100X 6X2650	TUBO RECT. 150X100X 6X2650
9	G14217270	TUBO R.150X100X 6X1480	RECTANGULAR PIPE 150X100X 6X14	TUBE RECT.150X100X 6X1480	R. ROHR 150X100X 6X1480	TUBO RECT. 150X100X 6X1480
10	G14217470	SPINA INFERIORE CILINDRO ZN	BOTTOM CYLINDER PIN	GOUPILLE INFERIEURE CYLINDRE	UNTERER STIFT ZYLINDER	CLAVIJA INFERIOR CILINDRO
11	G14217255	TELAIO PORTANTE CORTO	SUPPORTING FRAME SHORT	BATI PORTEUR COURT	TRAGRAHMEN KURZER	BASTIDOR PORTANTE CORTO
12	G14216613	BRACCIO INFERIORE	LOWER ARM	BRAS INFERIEUR	UNTERER ARM	BRAZO INFERIOR
13	G14216641	BRACCIO SUPERIORE	TOP ARM	BRAS SUPERIEUR	OBERER ARM	BRAZO SUPERIOR
14	G14217223	SUPPORTO TELAIO MOBILE DX	RIGHT MOBILE FRAME SUPPORT	SUPPORT BATI MOBILE DRT	HALTERUNG MOBILER RAHMEN RE	SOPORTE BASTIDOR MVIL DER
15	G14217243	SUPPORTO TELAIO MOBILE SX	LEFT MOBILE FRAME SUPPORT	SUPPORT BATI MOBILE GCH	HALTERUNG MOBILER RAHMEN LI	SOPORTE BASTIDOR MVIL IZQ
16	G19204030	SCONTRO FISS.150 2F D15				
17	G15211571	TAPPO TUBO 150X100	PLUG PIPE 150X100	BOUCHON TUBE 150X100	ROHRPFROPFEN 150X100	TAPON TUBO 150X100
18	F20100063	PERNO D25 L113 C40 ZN	PIN GASPARDO D25 L113 C40	PIVOT GASPARDO D25 L113 C40	BOLZEN GASPARDO D25 L113 C40	PERNO GASPARDO D25 L113 C40
19	F20100074	SPINA 1°-2° PUNTO ZN	PIN FOR BAR LINKAGE	GOUJON ATTELAGE BARRE	VERB.BOLZEN SCHUTZHOLM	PERNO ATAQUE BARRA
20	G20970043	RONDELLA 50X8X20,5 ZN	WASHER 50X8X20-5	RONDELLE 50X8X20-5	UNTERLEGSCHEIBE 50X8X20-5	ARANDELA 50X8X20-5
21	G20970120	RONDELLA 70X8X28,5	WASHER 70X8X28-5	RONDELLE 70X8X28-5	UNTERLEGSCHEIBE 70X8X28-5	ARANDELA 70X8X28-5
22	G18701530	RONDELLA 13X48X4 ZN	WASHER 13X48X4 ZN	RONDELLE 13X48X4 ZN	UNTERLEGSCHEIBE 13X48X4 ZN	ARANDELA 13X48X4 ZN
23	G18701580	RONDELLA 30,5 X76 X4	WASHER 30.5 X 76 X 6	RONDELLE 30-5 X78 X6	UNTERLEGSCHEIBE 30-5 X78 X6	ARANDELA 30-5 X78 X6
24	G18801380	BOCCOLA 20,25X40 X121	BUSHING 20.25 X 40 X 121	BOITE 20-25X40 X121	BsCHSE 20-25X40 X121	CASQUILLO 20-25X40 X121
25	F01020225	VITE M14X 2X160 U5737 8.8 BR	BOLT M 14 X160 5737 8.G	VIS M 14 X160 5737 8.G	SCHRAUBE M 14 X160 5737 8.G	TORNILLO M 14 X160 5737 8.G
26	F01020322	VITE M20X2,5X190 U5737 10.9 ZD	BOLT 20X190 5737 8.8 GALVANIZ.	VIS 20X190 5737 8.8 ZN	SCHRAUBE 20X190 5737 8.8 ZN	TORNILLO 20X190 5737 8.8 ZN
27	F01020476	VITE M10X 1,5X30 U5739 8.8 ZN	BOLT M 10X30	VIS M 10X30	SCHRAUBE M 10X30	TORNILLO M 10X30
28	F01020510	VITE M12X1,75X30 U5739 8.8 ZN	BOLT M 12X30	VIS M 12X30	SCHRAUBE M 12X30	TORNILLO M 12X30
29	F01230131	DADO M20X 2,5 D982 6 ZN	NUT M20X 2,5 D982 6 ZB	ECRO.M20X 2,5 D982 6 ZB	MUTT.M20X 2,5 D982 6 ZB	TUER.M20X 2,5 D982 6 ZB
30	F01200270	DADO M10X 1,5 U5588 6.8 ZN	NUT M10	ECROU M10	MUTTER M10	DADO M10
31	F01200293	DADO M12X1,75 U5588 6.8 ZN	NUT M12	ECROU M12	MUTTER M12	DADO M12
32	F01200306	DADO M14X 2 U5588 6.8 ZN	NUT M14X2	ECROU M14X2	MUTTER M14X2	DADO M14X2
33	F02200246	COPIGLIA 6X 45 U1336 ZN	SPLIT PIN 6 X45 1336 GALVAN.	GOUPILLE 6 X45 1336 ZN	SPLINT 6 X45 1336 ZN	PASADOR 6 X45 1336 ZN
34	F02200374	COPIGLIA R 4X 82 ZN	SPLIT PIN 5X100	GOUPILLE 5X100	SPLINT 5X100	PASADOR 5X100
35	F02200507	SPINA SCATTO D. 9 B/83 ZN	SNAP PIN D 9 B/83	FICHE A DETENTE D 9 B/83	EINRASTSTIFT D 9 B/83	CLAVIJA DE MUELLE D 9 B/83
36	F01100011	ING.M 6X1 7663-A 9SMNPB28 ZN	SPHERE NIPPLE M6X1/A	GRAISSEUR A BILLES M6X1/A	KUGELFETTBsCHSE M6X1/A	ENGRAS. DE ESFERAS M6X1/A
37	F01100061	ING.M10X1 7663-A 9SMNPB28 ZN	GREASE NIPPLE M10X1	GRAISSEUR M10X1	SCHMIERBUECHSE M10X1	ENGRASADOR M10X1
38	F05150459	PARACOLPI CIL.75X25 M12 SH70	RUBBER BUFFER- CYLINDR. 75X25	PARE-CHOCS CYL. 75X25 M12 7811	PUFFER ZYL.75X25 M12 781103	PARAGOLPES CIL.75X25 M12 78110
39	G18701770	RONDELLA 50 X90 X0,5	WASHER 50 X90 X0,5	RONDELLE 50 X90 X0,5	UNTERLEGSCHEIBE 50 X90 X0,5	ARANDELA 50 X90 X0,5
40	F01020166	VITE M12X1,75X80 U5737 8.8 ZN	BOLT 12X80 5737 8.G GALVANIZED	VIS 12X80 5737 8.G ZN	SCHRAUBE 12X80 5737 8.G ZN	TORNILLO 12X80 5737 8.G ZN
41	F01230291	DADO M30X 2 D985 ZN	SELF-LOCK NUT M30X2 DIN 985 ZN	ECROU AUTOB. M30X2 DIN 985 ZN	SELBSTSP. MU. M30X2 DIN 985 ZN	TUERCA AUTOB. M30X2 DIN 985 ZN
42	G15413210	TAPPO TELAIO 120 COMPL.				
43	G14219120	PUNTELLO	PROP	ETRESILLON	ST_TZE	PUNTAL
44	F01220048	DADO M12X1,75 D980 8 ZN	SELF LOCKING NUT M12X1,75 980V	ECROU AUTOBL. M12X1,75 980-V	SIEHE 00553312	DADO AUTOBL. M12X1,75 980-V
45	F01070078	VIT.A.4,2X1,41X 9,5 6950 4.8ZN	SELFTHREADING BOLT 4,2X13 TE	VIS AUTOTARADEUSE.4-2X13 TE	SELBSTSCHNEID. SCHRAUBE 4-2X13	TORNILLO AUTOR.4-2X13 TE
46	F03100178	KIT GUARNIZ.CILINDRO 14216770	KIT O-RING CYLINDER 15312720	KIT GARNIT. CYLINDRE 15312720	KIT DICHT.OR ZYLINDER15312720	SET JUNTA OR CILINDRO15312720
47	G22500070	SCONTRO SUPPORTO ASPIR.	STRIKER PLATE FAN SUPP.	BUTEE SUPPORT ASPIRATEUR	ABSAUGERHALTERUNGS-ANSCHLAG	ELEMENTO DE EMPALME SOPORTE AS
48	G14215951	GUIDATUBO	PIPE GUIDE	GUIDE-TUBE	ROHRFsHRUNG	GUA DE TUBO G
48	G14217110	GUIDATUBO 3 TUBI	PIPE GUIDE - 3 PIPES	GUIDE-TUBE - 3 TUBES	ROHRF_HRUNG - 3ROHR	GUA DE TUBO - 3 TUBOS
49	G19002770	PROTEZIONE ASSI	SPINDLE PROTECTION	PROTECTION AXES	SCHUTZ ACHSEN	PROTECCIN EJES P
50	G14218890	FERMO TELAIO	FRAME STOP	ARRET BATI	FESTSTELLVORRICHTUNG	BLOQUEO BASTIDOR
51	G14218851	BRACCIO INF.LUNGO	LOWER ARM LONG	BRAS LONG INFERIEUR	UNTERER LARGER ARM	BRAZO LARGO INFERIOR
52	G14218830	BRACCIO SUPPORTO LUNGO	LONG SUPPORT ARM COUPLING	BRAS SUPPORT LONG	LARGERALTERUNGSARM	BRAZO SOP. LARGO

TAV. 031

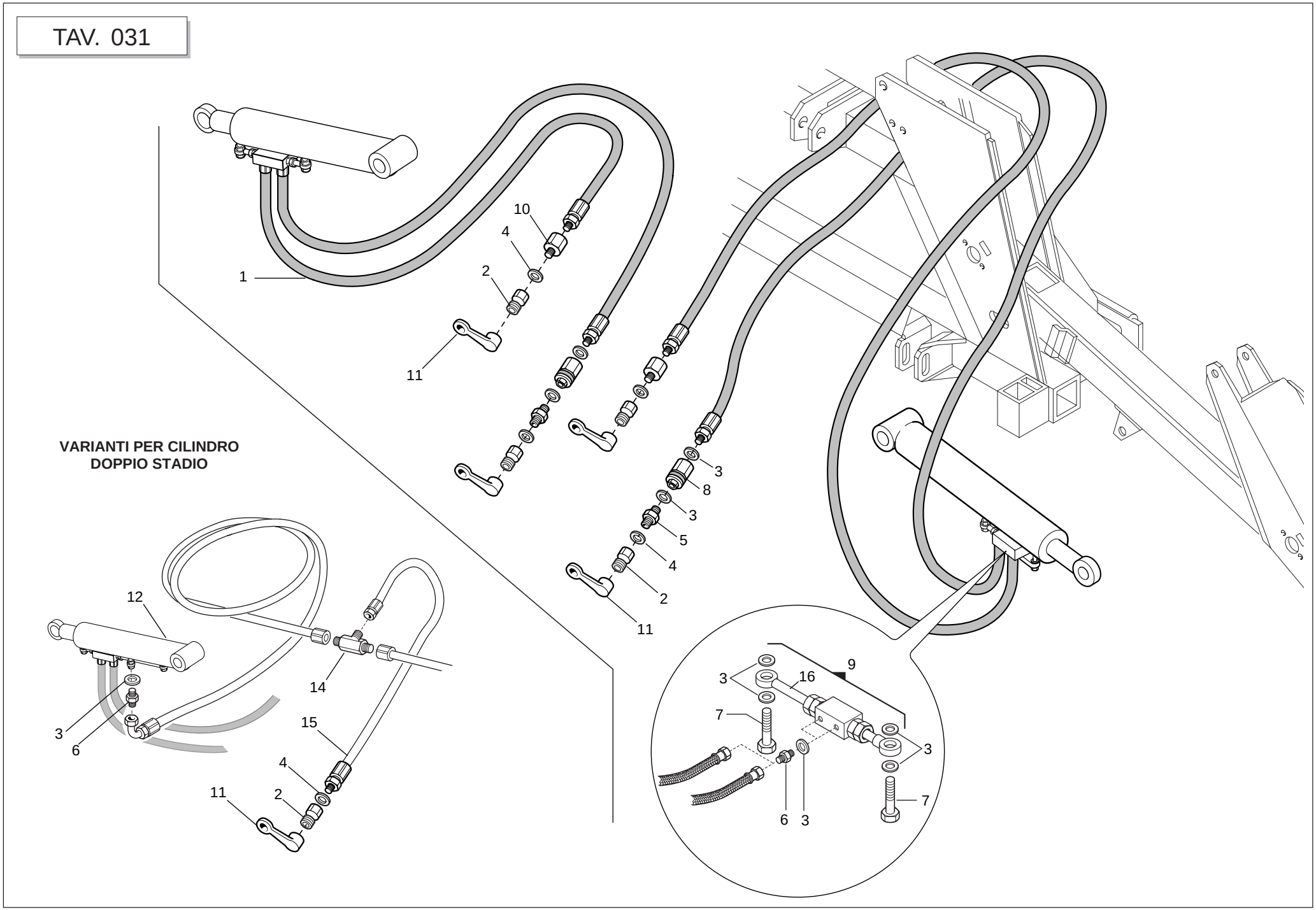

GASPARDO

cod. G19530286

IMPIANTO TELAIO

TAV. 031

Pos.	Cod.	Descrizione	Description	Description	Benennung	Descripcion
1	G14217120	TUBO 3/8R2 CF3/8- M3/8 L.3350	PIPE 3/8R2 CF3/8- M3/8 L.3350	TUBE 3/8R2 CF3/8- M3/8 L.3350	ROHR 3/8R2 CF3/8- M3/8 L.3350	TUBO 3/8R2 CF3/8- M3/8 L.3350
2	F03150935	INNESTO RAP.MASCH.1/2 A VALV.	QUICK CONNECT MALE CONE 1/2 CO	CONNEXION RAPIDE MALE CONE 1/2	SCHNELLKUPPLUNG GEWINDE KONISC	ACOPLAMIENTO RAPIDO MACHO CONO
3	F03151240	RONDELLA RAME 17X23X1,5 -3/8"	3/8 COPPER WASHER	RONDELLE CUIVRE 3/8	UNTERLEGSCHEIBE KUPFER 3/8	ARANDELA COBRE 3/8
4	F03151237	RONDELLA RAME 21X27X1,5 -1/2"	1/2 COPPER WASHER	RONDELLE CUIVRE 1/2	UNTERLEGSCHEIBE KUPFER 1/2	ARANDELA COBRE 1/2
5	F03150222	NIPPLO MM CIL-CIL 1/2-3/8 ZG	NIPPLE- GALVAN. CYLINDR.MALE-	NIPPLE MALE 1/2-3/8 ZING.	NIPPEL 1/2-3/8 VERZINKT	NIPLE MACHO 1/2-3/8 CINC.
6	F03150321	NIPPLO MM CIL-CIL 3/8-3/8 ZG	NIPPLE- GALVAN. CYLINDR.MALE-	NIPPLE MALE 3/8-MALE 3/8	NIPPEL 3/8- 3/8	NIPLE MACHO 3/8-MACHO 3/8
7	F03151223	RACCORDO VITE CAVA 3/8	UNION BOLT HOLLOW 3/8	RACCORD VIS CREUSE 3/8	ANSCHLUSS GEWINDEHOHLSCHR.3/8	UNIN TORNILLO RANURA 3/8 R
8	F03151252	STROZZATORE BIDIREZ.VSRB 3/8	BI-DIRECTIONAL VENTURI 3/8	ETRANGLEUR BIDIRECTIONN. 3/8	ZWEIS. DROSSEL	ESTRANGULADOR BIDIRECCIONAL 3/
9	F03150589	KIT VALVOLA DI BLOCCO 3/8 DE	PIL. BLOCK VALVE VBPDE38EC	SOUPAPE BLOC GUIDEE VBPDE38EC	GEST. SPERRVENTIL VBPDE38EC	VæLVULA BLOQUE PIL.VBPDE38EC
10	F03151213	RACCORDO RIDUZIONE M 1/2-F 3/8	M 1/2-F 3/8 CONNECTION PIPE	RACCORD REDUCTION FINALEM 1/2-	ANSCHLUSS REDUKTIONM 1/2-F 3/8	UNION REDUCCION M ¢-F 3/8
11	F05150325	CAPPUCCIO PROT.INNESTO RAP.1/2	COVER 1/2	COUVERCLE 1/2	DECKEL 1/2	TAPA 1/2
12	G14217510	CILINDRO DOPPIO STADIO *>	DOUBLE STAGE CYLINDER	CYLINDRE DOUBLE ETAGE	ZYLINDER DOPPELSTUFE	CILINDOR DOBLE ESTADIO
13	G15312621	TUBO 3/8 R2 F3/8-C3/8 L.2000	PIPE 3/8 R2 F3/8-C3/8 L.2000	TUBE 3/8 R2 F3/8-C3/8 L.2000	ROHR 3/8 R2 F3/8-C3/8 L.2000	TUBO 3/8 R2 F3/8-C3/8 L.2000
14	F03151220	RACCORDO -T- MASCHIO 3/8 ZN	MALE T-UNION 3/8 ZINC.	RACCORD -T- MALE 3/8 ZING.	ANSCHLUSSTsCK -T- GEWINDE 3/8	UNIN -T- MACHO 3/8 CINC. R
15	G22280116	TUBO 3/8-R2 F3/8-M1/2 MT.1,50	PIPE 3/8-R1 F3/8-M1/2 MT.1-50	TUBE 3/8-R1 F3/8-M1/2 M. 1-50	ROHR 3/8-R1 F3/8-M1/2 M 1-50	TUBO 3/8-R1 F3/8-M1/2 MT.1-50
16	F03151211	RACCORDO OCCHIO 3/8 D.12 L.300	EYE UNION 3/8 D.12 L.300	RACCORD OEIL 3/8 D.12 L.300	TSENVERBINDUNGSSTsCK 3/8 D.12	UNIN OJO 3/8 O.12 L.300 R

TAV. 293

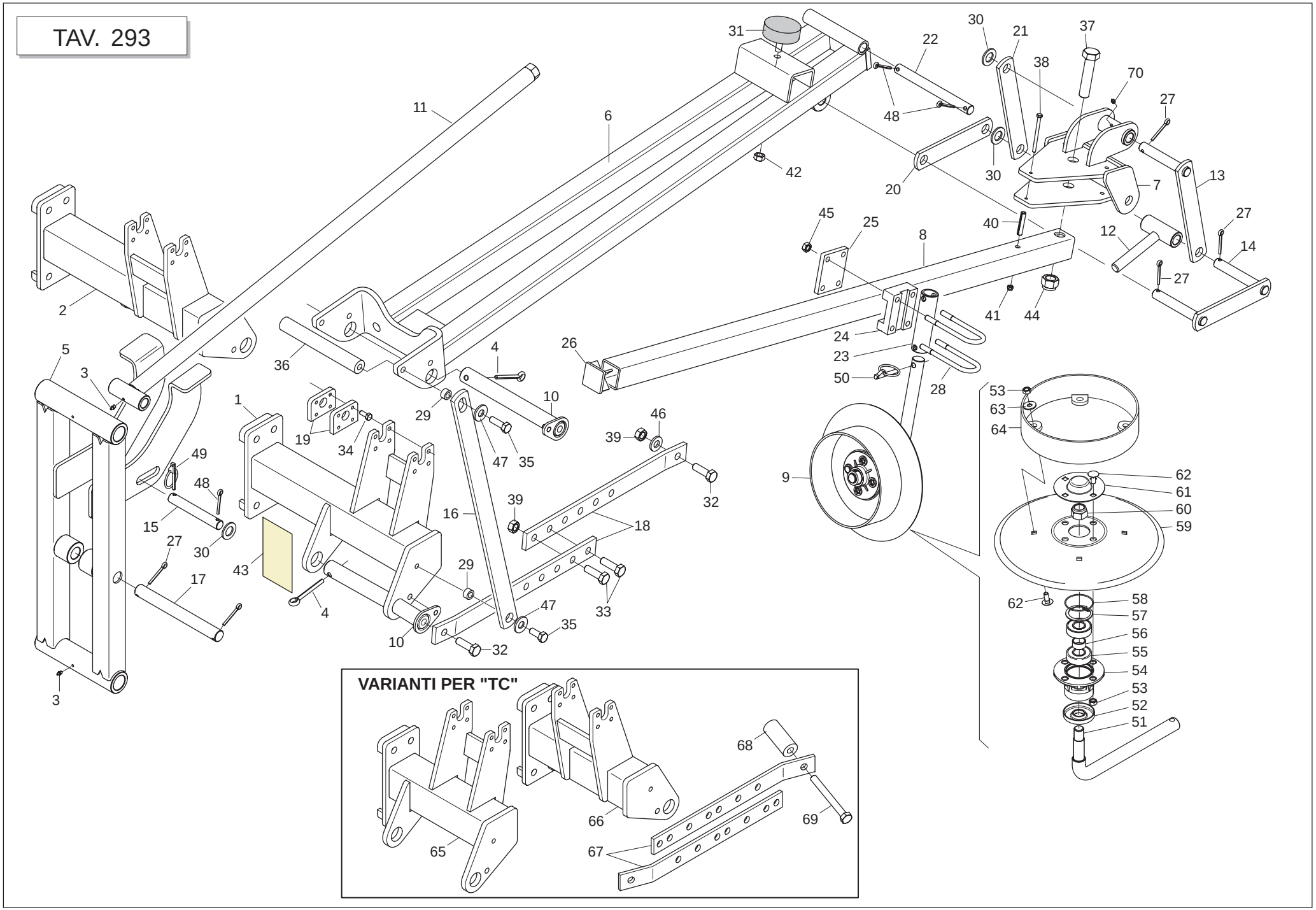

GASPARDO

SEGNAFILE CON TRACCIA CENTRO TRATTORE

TAV. 293

Pos.	Cod.	Descrizione	Description	Description	Benennung	Descripcion
1	G14218073	SUPPORTO DX LUNGO	RIGHT SUPPORT LONG	SUPPORT DRT LONG	HALTERUNG RE LANGES	SOPORTE DER LARGO
2	G14218083	SUPPORTO SX LUNGO	LEFT SUPPORT LONG	SUPPORT GCH LONG	HALTERUNG LI LANGES	SOPORTE IZQ LARGO
3	F01100011	ING.M 6X1 7663-A 9SMNPB28 ZN	SPHERE NIPPLE M6X1/A	GRAISSEUR A BILLES M6X1/A	KUGELFETTBsCHSE M6X1/A	ENGRAS. DE ESFERAS M6X1/A
4	F02200260	COPIGLIA 8X 60 U1336 ZN	SPLIT PIN 8 X60 1336 GALVAN.	GOUPILLE 8 X60 1336 ZN	SPLINT 8 X60 1336 ZN	PASADOR 8 X60 1336 ZN
5	G14218321	BRACCIO SPINTA	PRESS. ARM	POUSSEE BRAS	ARMSCHUB	APRIETE BRAZO
6	G14218112	SECONDO BRACCIO	2.ARM	2.BRAS	2.ARM	2.ARM
7	G14218372	TESTA TERZO BRACCIO	ARM COUPLING	FIXATION BRAS	ARMKUPPLUNG	CONEXIËN BRAZO
8	G14218121	TUBO TERZO BRACCIO	THIRD ARM TUBE	TUBE TROISIEME BRAS	ROHR DRITTER ARM	TUBO TERCER BRAZO
9	G16610222	MONT.DISCO D.320 LIM.				
10	G14218190	SPINA ROTAZIONE ZN	ROTATION PIN ZN	GOUPILLE ROTATION ZN	ROTATIONSSTIFT ZN	PASADOR ROTACIËN ZN
11	G14218520	TIRANTE ROTAZIONE	ROTATION TIE ROD	TRINGLE ROTATION	ROTATIONS SPANNSTANGE	ROTATIONS SPANNSTANGE
12	G14218210	REGOLAZIONE TIRANTE	TIE ROD ADJUSTMENT	REGLAGE TIRANT	SPANNSTANGENSTELLUNG	REGULACIËN TIRANTE
13	G14218470	ASTA ROTAZIONE SUP.	UPPER ROTATION ROD	TIGE DE ROTATION SUP.	ROTATIONSTANGE OBEN	VARILLA DE ROTACIËN SUPERIOR
14	G14218450	ASTA ROTAZIONE INF.	LOWER ROTATION ROD	TIGE DE ROTATION INF.	ROTATIONSTANGE UNTEN	VARILLA DE ROTACIËN INFERIOR
15	G14218750	SPINA D.20 X124 ZN	GALVANIZED PIN D.20 X124	GOUPILLE D.20 X124 ZN	STIFT D.20 X124 ZN	CLAVIJA D.20 X124 ZN
16	G14218161	TIRANTE ROTAZIONE	ROTATION TIE ROD	TRINGLE ROTATION	ROTATIONS SPANNSTANGE	TIRANTE ROTACI-N
17	G14218200	SPINA DI SPINTA ZN	PRESS. PIN	POUSSEE BROCHE	STIFTSCHUB	APRIETE CLAVIJA
18	G14215840	TIRANTE SEGNAFILE	ROWMARKER TIE ROD	TRINGLE TRACEUR	SPANNSTANGE SPURREISSER	TIRANTE MARCADOR DE FILAS
19	G14218150	PIASTRINA FISSAGGIO CILINDRO	SECURING PLATE	PLAQUE FIXATION	BEFESTIGUNGSPLATTE	PLACA FIJACI-N
20	G14218430	ASTA ROTAZIONE INFERIORE	LOWER ROTATION ROD	TIGE DE ROTATION INF.	ROTATIONSTANGE UNTEN	VARILLA DE ROTACIËN INFERIOR
21	G14218460	ASTA ROTAZIONE SUPERIORE	UPPER ROTATION ROD	TIGE DE ROTATION SUP.	ROTATIONSTANGE OBEN	VARILLA DE ROTACIËN SUPERIOR
22	G14215850	SPINA 20 X194 ZN	GALVANIZED PIN 20 X194	GOUPILLE 20 X194 ZN	STIFT 20 X194 ZN	CLAVIJA 20 X194 ZN
23	G17111290	MANICOTTO DISCO	DISC COUPLING SLEEVE	MANCHON DISQUE	SCHEIBENMUFFE	MANGUITO DISCO
24	G16912470	SCONTRO FISS.MANICOTTO TQ.50	STRIKER PLATE SLEEVE	BUTEE MANCHON	ANSCHLAG MUFFE	ELEMENTO DE EMPALME MANGUITO
25	G17111330	SCONTRO 90X70 -10 4F11 66X46	STOP TEETH 90X70 -10 4F11 66X4	BUT+E 90X70 -10 4TROUS 11 66X4	ANSCHLAG 90X70 -10 4F11 66X46	DIENTE DE PARADA 90X70 -10 4F1
26	F20120349	PUNTALE Q.50 ALETT.POLIT.NERO				
27	F02200229	COPIGLIA 5X 45 U1336 ZN	SPLIT PIN 5 X45 1336 GALVAN.	GOUPILLE 5 X45 1336 ZN	SPLINT 5 X45 1336 ZN	PASADOR 5 X45 1336 ZN
28	F20110860	CAV.T.M10X 1,5X 30 46X128,5ZN	U BOLT M10X46 ZN	CAVALIER M10X46 ZN	VERBINDUNG M10X46 ZN	PERNO EN U M10X46 ZN
29	G20980081	BOCCOLA 25X12X16,25	BUSHING 25X12X16-25	BOITE 25X12X16-25	BsCHSE 25X12X16-25	CASQUILLO 25X12X16-25
30	F01410124	ROS.M20 21X 37X 3 U6592 ZN	PLANE WASHER D20 UNI 6592 ZN	RONDELLE D20 UNI 6592 ZN	SCHEIBE D20 UNI 6592 ZN	ARANDELLA D20 UNI 6592 ZN
31	F05150459	PARACOLPI CIL.75X25 M12 SH70	RUBBER BUFFER- CYLINDR. 75X25	PARE-CHOCS CYL. 75X25 M12 7811	PUFFER ZYL.75X25 M12 781103	PARAGOLPES CIL.75X25 M12 78110
32	F01020544	VITE M14X 2X40 U5739 8.8 ZN	BOLT M14X2X40	VIS M14X2X40	SCHRAUBE M14X2X40	TORNILLO M14X2X40
33	F01020542	VITE M14X 2X35 U5739 8.8 ZN	BOLT M14X2X35	VIS M14X2X35	SCHRAUBE M14X2X35	TORNILLO M14X2X35
34	F01020436	VITE M 8X1,25X 20 U5739 8.8 ZN	BOLT M 8X20	VIS M 8X20	SCHRAUBE M 8X20	TORNILLO M 8X20
35	F01020252	VITE M16X 2X 50 U5737 8 8 ZN	BOLT M16X 2X 50 U5737 8.8 ZB	VIS M16X 2X 50 U5737 8.8 ZB	SCHR.M16X 2X 50 U5737 8.8 ZB	TORN.M16X 2X 50 U5737 8.8 ZB
36	G15911290	RINF.FORCELLA BRACCIO SEGN.ZN	ROW MARKER ARM FORK REINF. ZN	RENF.FOURCHE BRAS TRAC.ZN	VERST. ARMGABEL SPURR.ZN	REF. HORQUILLA BRAZO SURC. ZN
37	F01020312	VITE M20X2,5X100 U5737 8.8 ZN	BOLT 20X100 5737 8.G GALVANIZ.	VIS 20X100 5737 8.G ZN	SCHRAUBE 20X100 5737 8.G ZN	TORNILLO 20X100 5737 8.G ZN
38	F01020050	VITE M 6X 1X 80 U5737 8.8 ZN	BOLT 6 X80 5737 8.G GALVANIZED	VIS 6 X80 5737 8.G ZN	SCHRAUBE 6 X80 5737 8.G ZN	TORNILLO 6 X80 5737 8.G ZN
39	F01200306	DADO M14X 2 U5588 6.8 ZN	NUT M14X2	ECROU M14X2	MUTTER M14X2	DADO M14X2
40	F02100164	SPINA E.P. 10X 50 U6873 C70 BR	PIN EL. 10X50 DIN 1481 *	GOUPILLE EL.10 X50 DIN 1481	SPANNSTIFT 10X50 DIN 1481	CLAVIJA EL.10 X50 DIN 1481
41	F01230022	DADO M 6X 1 D982 8 ZN	NORM.SELF-LOCKING NUT 6 GALVAN	ECROU AUTOB.NOR.6 ZN	SELBSTSP. MUTTER NOR.6 ZN	TUERCA AUTOB. NOR. 6 ZN
42	F01220048	DADO M12X1,75 D980 8 ZN	SELF LOCKING NUT M12X1,75 980V	ECROU AUTOBL. M12X1,75 980-V	SIEHE 00553312	DADO AUTOBL. M12X1,75 980-V
43	F20030078	DECALCOM.CADUTA UTENSILI	ôTOOLS FALLING DOWNö TRANSFER	DECALC. CHUTE OUTILS	AUFKLEBERABSTURZ WERKZEUGE	ETIQUETA ADHES. CAIDA HERRAMIE
44	F01230131	DADO M20X 2,5 D982 6 ZN	NUT M20X 2,5 D982 6 ZB	ECRO.M20X 2,5 D982 6 ZB	MUTT.M20X 2,5 D982 6 ZB	TUER.M20X 2,5 D982 6 ZB
45	F01200270	DADO M10X 1,5 U5588 6.8 ZN	NUT M10	ECROU M10	MUTTER M10	DADO M10
46	G18700690	RONDELLA 15 X40 X6 ZN	WASHER 15 X 40 X 6 ZN	RONDELLE 15 X40 X6 ZN	UNTERLEGSCHEIBE 15 X40 X6 ZN	ARANDELA 15 X40 X6 ZN
47	G20970045	RONDELLA 17X45X6 ZINC	WASHER	RONDELLE 17X38X6 ZING.	UNTERLEGSCHEIBE 17X38X6 VERZIN	ARANDELA 17X38X6 CINC
48	F02200226	COPIGLIA 5X 25 U1336 ZN	SPLIT PIN 5 X25 1336 GALVAN.	GOUPILLE 5 X25 1336 ZN	SPLINT 5 X25 1336 ZN	PASADOR 5 X25 1336 ZN
49	F02200474	SPINA SCATTO D.5,5 ZN	SNAP PIN D 5,5	FICHE A DETENTE D. 5,5	EINRASTSTIFT D 5,5	CLAVIJA DE MUELLE D 5,5
50	F02200507	SPINA SCATTO D. 9 B/83 ZN	SNAP PIN D 9 B/83	FICHE A DETENTE D 9 B/83	EINRASTSTIFT D 9 B/83	CLAVIJA DE MUELLE D 9 B/83
51	G16610180	PERNO REGGIDISCO SEGNAF.	ROWMAKER DISC-HOLDER PIN	PIVOT PORTE-DISQUE TRACEUR	SCHEIBENTRAGBOLZEN	PERNO SOPORTE DISCO MARCAFILA
52	G18802790	BOCCOLA 25 X20 X7 ZN B.	BUSHING 25 X20 X7 ZN B.	BOITE 25 X20 X7 ZN B.	B_CHSE 25 X20 X7 ZN B.	CASQUILLO 25 X20 X7 ZN B
53	F01200244	DADO M 8X1,25 U5588 6.8 ZN	NUT M8	ECROU M8	MUTTER M8	DADO M8
54	G16610160	SUPP.CUSCINETTI DISCO SEGN.ZN.	GALVAN. ROWMAKER DISK BEARING	SUPPORT ROULEMENTS DISQUE TRAC	SCHEIBENLAGERHALTERUNG	SOPORTE COJINETE DE DISCO MARC
55	F04010156	CUSC.d20 D47 B14 6204 2RSH				
56	G18801270	BOCCOLA 21 X25 X12 ZN	BUSHING 21 X 25 X 12 ZN	BOITE 21 X25 X12 ZN	BsCHSE 21 X25 X12 ZN	CASQUILLO 21 X25 X12 ZN
57	F02050370	ANELLO E. DI 47X1,75 U7437 C70	SEEGER RING 47X 1,75 U7437 C70	SEEGER E. 47X 1,75 U7437 C70	SEEGERING E. 47X1,75 U7437 C70	ANILLO E. 47X 1,75 U7437 C70
58	F03010576	ANELLO OR 50,52X1,78 NBR	GASKET OR 033 DOWTY	BAGUE OR 033 DOWTY	RING OR 033 DOWTY	ANILLO OR 033 DOWTY
59	G16610170	DISCO SEGNAFILE D.320	ROW MARKER DISK D.320	DISQUE TRACEUR D320	SPURREISSERSCHEIBE D. 320	DISCO MARCARDOR DE FILAS O 320
60	F01230098	DADO M18X 2,5 D982 8 ZN	NUT M18X 2,5 D982 8 ZB	ECRO.M18X 2,5 D982 8 ZB	MUTT.M18X 2,5 D982 8 ZB	TUER.M18X 2,5 D982 8 ZB
61	G16610190	CHIUSURA CUSCINETTO ZN	GALVAN. BEARING CLOSURE	FERMETURE ROULEMENT ZN	LAGERVERSCHLUSS ZN	CIERRE COJINETE ZN
62	F01060040	BUL.M 8X1,25X 20 U5732 4.6 ZG	BOLT 8 X20 5732 4.6 GALVANIZED	VIS 8 X20 5732 4.6 ZN	SCHRAUBE 8 X20 5732 4.6 ZN	TORNILLO 8 X20 5732 4.6 ZN
63	F01420048	ROS.M8 8,4X 24X 2 U6593 ZN	PLANE WASHER D.8	RONDELLE D.8	SCHEIBE D.8	ARANDELA D.8
64	G16610210	ASS.LIMITATORE PROFONDITA'	LIMITER DEPTH COUPLYNG	GR. ASS. LIMITEUR DE PROFONDEU	TIEFENBEGRENZERKOMPLEX	CONJ. LIMITADOR DE PROFUNDIDAD
65	G14218233	SUPPORTO DX CORTO	RIGHT SUPPORT SHORT	SUPPORT DRT COURT	HALTERUNG RE KURZER	SOPORTE DER CORTO
66	G14218243	SUPPORTO SX CORTO	LEFT SUPPORT SHORT	SUPPORT GCH COURT	HALTERUNG LI KURZER	SOPORTE IZQ CORTO
67	G14217050	TIRANTE SUPPORTO SEGNAF.	ROW MARKER SUPPORT TIE ROD	TRINGLE SUPPORT TRACEUR	SPANNSTANGE HALTERUNG SPURR.	TIRANTE SOPORTE MARCADOR
68	G14217020	BOCCOLA 15 X35 X80	BUSHING 15 X35 X80	BOITE 15 X35 X80	B_CHSE 15 X35 X80	CASQUILLO 15 X35 X80
69	F01020218	VITE M14X 2X130 U5737 8.8 ZN	BOLT M 14X130	VIS M 14X130	SCHRAUBE M 14X130	TORNILLO M 14X130
70	F01100011	ING.M 6X1 7663-A 9SMNPB28 ZN	SPHERE NIPPLE M6X1/A	GRAISSEUR A BILLES M6X1/A	KUGELFETTBsCHSE M6X1/A	ENGRAS. DE ESFERAS M6X1/A

TAV. 312

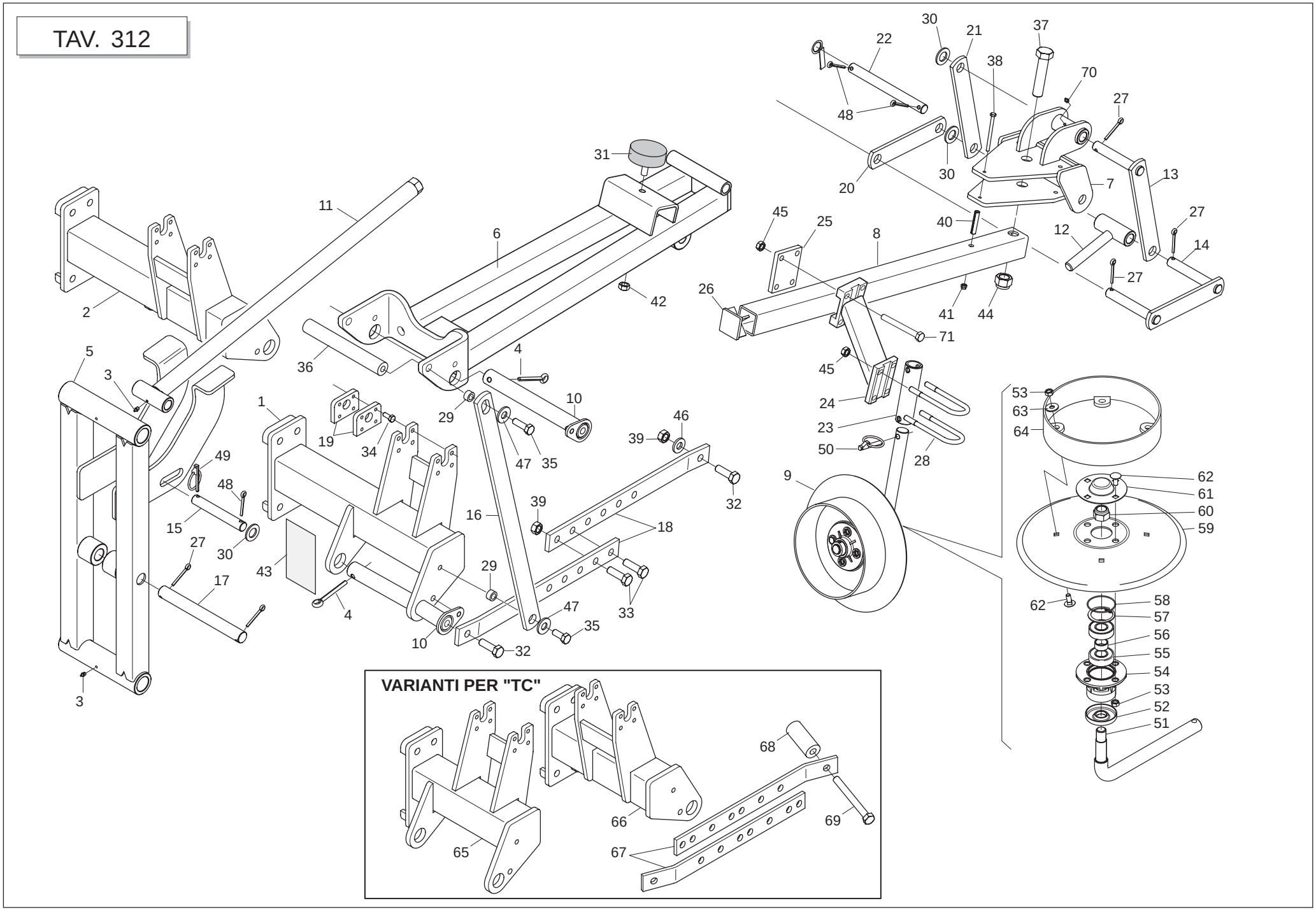

GASPARDO

cod. G19530286

SEGNAFILE CON TRACCIA SU RUOTA TRATTORE

TAV. 312

Pos.	Cod.	Descrizione	Description	Description	Benennung	Descripcion
1	G14218073	SUPPORTO DX LUNGO	RIGHT SUPPORT LONG	SUPPORT DRT LONG	HALTERUNG RE LANGES	SOPORTE DER LARGO
2	G14218083	SUPPORTO SX LUNGO	LEFT SUPPORT LONG	SUPPORT GCH LONG	HALTERUNG LI LANGES	SOPORTE IZQ LARGO
3	F01100011	ING.M 6X1 7663-A 9SMNPB28 ZN	SPHERE NIPPLE M6X1/A	GRAISSEUR A BILLES M6X1/A	KUGELFETTBsCHSE M6X1/A	ENGRAS. DE ESFERAS M6X1/A
4	F02200260	COPIGLIA 8X 60 U1336 ZN	SPLIT PIN 8 X60 1336 GALVAN.	GOUPILLE 8 X60 1336 ZN	SPLINT 8 X60 1336 ZN	PASADOR 8 X60 1336 ZN
5	G14218321	BRACCIO SPINTA	PRESS. ARM	POUSSEE BRAS	ARMSCHUB	APRIETE BRAZO
6	G14218982	SECONDO BRACCIO CORTO				
7	G14218372	TESTA TERZO BRACCIO	ARM COUPLING	FIXATION BRAS	ARMKUPPLUNG	CONEXIËN BRAZO
8	G14219001	TUBO TERZO BRACCIO CORTO	THIRD ARM TUBE SHORT	TUBE TROISIEME BRAS COURT	ROHR DRITTER ARM KURZER	TUBO TERCER BRAZO CORTO
9	G16610222	MONT.DISCO D.320 LIM.				
10	G14218190	SPINA ROTAZIONE ZN	ROTATION PIN ZN	GOUPILLE ROTATION ZN	ROTATIONSSTIFT ZN	PASADOR ROTACIËN ZN
11	G14219011	TIRANTE ROTAZIONE BRACCIO	ARM ROTATION TIE ROD	TRINGLE ROTATION BRAS	ROTATIONS SPANNSTANGE ARM	ROTATIONS SPANNSTANGE BRAZO
12	G14218210	REGOLAZIONE TIRANTE	TIE ROD ADJUSTMENT	REGLAGE TIRANT	SPANNSTANGENSTELLUNG	REGULACIËN TIRANTE
13	G14218470	ASTA ROTAZIONE SUP.	UPPER ROTATION ROD	TIGE DE ROTATION SUP.	ROTATIONSTANGE OBEN	VARILLA DE ROTACIËN SUPERIOR
14	G14218450	ASTA ROTAZIONE INF.	LOWER ROTATION ROD	TIGE DE ROTATION INF.	ROTATIONSTANGE UNTEN	VARILLA DE ROTACIËN INFERIOR
15	G14218750	SPINA D.20 X124 ZN	GALVANIZED PIN D.20 X124	GOUPILLE D.20 X124 ZN	STIFT D.20 X124 ZN	CLAVIJA D.20 X124 ZN
16	G14218161	TIRANTE ROTAZIONE	ROTATION TIE ROD	TRINGLE ROTATION	ROTATIONS SPANNSTANGE	TIRANTE ROTACI-N
17	G14218200	SPINA DI SPINTA ZN	PRESS. PIN	POUSSEE BROCHE	STIFTSCHUB	APRIETE CLAVIJA
18	G14215840	TIRANTE SEGNAFILE	ROWMARKER TIE ROD	TRINGLE TRACEUR	SPANNSTANGE SPURREISSER	TIRANTE MARCADOR DE FILAS
19	G14218150	PIASTRINA FISSAGGIO CILINDRO	SECURING PLATE	PLAQUE FIXATION	BEFESTIGUNGSPLATTE	PLACA FIJACI-N
20	G14218430	ASTA ROTAZIONE INFERIORE	LOWER ROTATION ROD	TIGE DE ROTATION INF.	ROTATIONSTANGE UNTEN	VARILLA DE ROTACIËN INFERIOR
21	G14218460	ASTA ROTAZIONE SUPERIORE	UPPER ROTATION ROD	TIGE DE ROTATION SUP.	ROTATIONSTANGE OBEN	VARILLA DE ROTACIËN SUPERIOR
22	G14215850	SPINA 20 X194 ZN	GALVANIZED PIN 20 X194	GOUPILLE 20 X194 ZN	STIFT 20 X194 ZN	CLAVIJA 20 X194 ZN
23	G17111290	MANICOTTO DISCO	DISC COUPLING SLEEVE	MANCHON DISQUE	SCHEIBENMUFFE	MANGUITO DISCO
24	G14219030	SUPPORTO ESTERNO DISCO	DISC EXT. SUPPORT	SUPPORT EXT. DISQUE	ZUSSERE HALTERUNG SCHEIBEN	SOPORTE EXT. DISCO
25	G17111330	SCONTRO 90X70 -10 4F11 66X46	STOP TEETH 90X70 -10 4F11 66X4	BUT+E 90X70 -10 4TROUS 11 66X4	ANSCHLAG 90X70 -10 4F11 66X46	DIENTE DE PARADA 90X70 -10 4F1
26	F20120349	PUNTALE Q.50 ALETT.POLIT.NERO				
27	F02200229	COPIGLIA 5X 45 U1336 ZN	SPLIT PIN 5 X45 1336 GALVAN.	GOUPILLE 5 X45 1336 ZN	SPLINT 5 X45 1336 ZN	PASADOR 5 X45 1336 ZN
28	F20110855	CAV.T.M10X 1,5X 25 46X58,5 ZN	U BOLT M10X46 -58 ZN	CAVALIER M10X46 -58 ZN	VERBINDUNG M10X46 -58 ZN	PERNO EN U M10X46 -58 ZN
29	G20980081	BOCCOLA 25X12X16,25	BUSHING 25X12X16-25	BOITE 25X12X16-25	BsCHSE 25X12X16-25	CASQUILLO 25X12X16-25
30	F01410124	ROS.M20 21X 37X 3 U6592 ZN	PLANE WASHER D20 UNI 6592 ZN	RONDELLE D20 UNI 6592 ZN	SCHEIBE D20 UNI 6592 ZN	ARANDELLA D20 UNI 6592 ZN
31	F05150459	PARACOLPI CIL.75X25 M12 SH70	RUBBER BUFFER- CYLINDR. 75X25	PARE-CHOCS CYL. 75X25 M12 7811	PUFFER ZYL.75X25 M12 781103	PARAGOLPES CIL.75X25 M12 78110
32	F01020544	VITE M14X 2X40 U5739 8.8 ZN	BOLT M14X2X40	VIS M14X2X40	SCHRAUBE M14X2X40	TORNILLO M14X2X40
33	F01020542	VITE M14X 2X35 U5739 8.8 ZN	BOLT M14X2X35	VIS M14X2X35	SCHRAUBE M14X2X35	TORNILLO M14X2X35
34	F01020436	VITE M 8X1,25X 20 U5739 8.8 ZN	BOLT M 8X20	VIS M 8X20	SCHRAUBE M 8X20	TORNILLO M 8X20
35	F01020252	VITE M16X 2X 50 U5737 8 8 ZN	BOLT M16X 2X 50 U5737 8.8 ZB	VIS M16X 2X 50 U5737 8.8 ZB	SCHR.M16X 2X 50 U5737 8.8 ZB	TORN.M16X 2X 50 U5737 8.8 ZB
36	G15911290	RINF.FORCELLA BRACCIO SEGN.ZN	ROW MARKER ARM FORK REINF. ZN	RENF.FOURCHE BRAS TRAC.ZN	VERST. ARMGABEL SPURR.ZN	REF. HORQUILLA BRAZO SURC. ZN
37	F01020312	VITE M20X2,5X100 U5737 8.8 ZN	BOLT 20X100 5737 8.G GALVANIZ.	VIS 20X100 5737 8.G ZN	SCHRAUBE 20X100 5737 8.G ZN	TORNILLO 20X100 5737 8.G ZN
38	F01020050	VITE M 6X 1X 80 U5737 8.8 ZN	BOLT 6 X80 5737 8.G GALVANIZED	VIS 6 X80 5737 8.G ZN	SCHRAUBE 6 X80 5737 8.G ZN	TORNILLO 6 X80 5737 8.G ZN
39	F01200306	DADO M14X 2 U5588 6.8 ZN	NUT M14X2	ECROU M14X2	MUTTER M14X2	DADO M14X2
40	F02100164	SPINA E.P. 10X 50 U6873 C70 BR	PIN EL. 10X50 DIN 1481 *	GOUPILLE EL.10 X50 DIN 1481	SPANNSTIFT 10X50 DIN 1481	CLAVIJA EL.10 X50 DIN 1481
41	F01230022	DADO M 6X 1 D982 8 ZN	NORM.SELF-LOCKING NUT 6 GALVAN	ECROU AUTOB.NOR.6 ZN	SELBSTSP. MUTTER NOR.6 ZN	TUERCA AUTOB. NOR. 6 ZN
42	F01220048	DADO M12X1,75 D980 8 ZN	SELF LOCKING NUT M12X1,75 980V	ECROU AUTOBL. M12X1,75 980-V	SIEHE 00553312	DADO AUTOBL. M12X1,75 980-V
43	F20030078	DECALCOM.CADUTA UTENSILI	ôTOOLS FALLING DOWNö TRANSFER	DECALC. CHUTE OUTILS	AUFKLEBERABSTURZ WERKZEUGE	ETIQUETA ADHES. CAIDA HERRAMIE
44	F01230131	DADO M20X 2,5 D982 6 ZN	NUT M20X 2,5 D982 6 ZB	ECRO.M20X 2,5 D982 6 ZB	MUTT.M20X 2,5 D982 6 ZB	TUER.M20X 2,5 D982 6 ZB
45	F01200270	DADO M10X 1,5 U5588 6.8 ZN	NUT M10	ECROU M10	MUTTER M10	DADO M10
46	G18700690	RONDELLA 15 X40 X6 ZN	WASHER 15 X 40 X 6 ZN	RONDELLE 15 X40 X6 ZN	UNTERLEGSCHEIBE 15 X40 X6 ZN	ARANDELA 15 X40 X6 ZN
47	G20970045	RONDELLA 17X45X6 ZINC	WASHER	RONDELLE 17X38X6 ZING.	UNTERLEGSCHEIBE 17X38X6 VERZIN	ARANDELA 17X38X6 CINC
48	F02200226	COPIGLIA 5X 25 U1336 ZN	SPLIT PIN 5 X25 1336 GALVAN.	GOUPILLE 5 X25 1336 ZN	SPLINT 5 X25 1336 ZN	PASADOR 5 X25 1336 ZN
49	F02200474	SPINA SCATTO D.5,5 ZN	SNAP PIN D 5,5	FICHE A DETENTE D. 5,5	EINRASTSTIFT D 5,5	CLAVIJA DE MUELLE D 5,5
50	F02200507	SPINA SCATTO D. 9 B/83 ZN	SNAP PIN D 9 B/83	FICHE A DETENTE D 9 B/83	EINRASTSTIFT D 9 B/83	CLAVIJA DE MUELLE D 9 B/83
51	G16610180	PERNO REGGIDISCO SEGNAF.	ROWMAKER DISC-HOLDER PIN	PIVOT PORTE-DISQUE TRACEUR	SCHEIBENTRAGBOLZEN	PERNO SOPORTE DISCO MARCAFILA
52	G18802790	BOCCOLA 25 X20 X7 ZN B.	BUSHING 25 X20 X7 ZN B.	BOITE 25 X20 X7 ZN B.	B_CHSE 25 X20 X7 ZN B.	CASQUILLO 25 X20 X7 ZN B
53	F01200244	DADO M 8X1,25 U5588 6.8 ZN	NUT M8	ECROU M8	MUTTER M8	DADO M8
54	G16610160	SUPP.CUSCINETTI DISCO SEGN.ZN.	GALVAN. ROWMAKER DISK BEARING	SUPPORT ROULEMENTS DISQUE TRAC	SCHEIBENLAGERHALTERUNG	SOPORTE COJINETE DE DISCO MARC
55	F04010156	CUSC.d20 D47 B14 6204 2RSH				
56	G18801270	BOCCOLA 21 X25 X12 ZN	BUSHING 21 X 25 X 12 ZN	BOITE 21 X25 X12 ZN	BsCHSE 21 X25 X12 ZN	CASQUILLO 21 X25 X12 ZN
57	F02050370	ANELLO E. DI 47X1,75 U7437 C70	SEEGER RING 47X 1,75 U7437 C70	SEEGER E. 47X 1,75 U7437 C70	SEEGERING E. 47X1,75 U7437 C70	ANILLO E. 47X 1,75 U7437 C70
58	F03010576	ANELLO OR 50,52X1,78 NBR	GASKET OR 033 DOWTY	BAGUE OR 033 DOWTY	RING OR 033 DOWTY	ANILLO OR 033 DOWTY
59	G16610170	DISCO SEGNAFILE D.320	ROW MARKER DISK D.320	DISQUE TRACEUR D320	SPURREISSERSCHEIBE D. 320	DISCO MARCARDOR DE FILAS O 320
60	F01230098	DADO M18X 2,5 D982 8 ZN	NUT M18X 2,5 D982 8 ZB	ECRO.M18X 2,5 D982 8 ZB	MUTT.M18X 2,5 D982 8 ZB	TUER.M18X 2,5 D982 8 ZB
61	G16610190	CHIUSURA CUSCINETTO ZN	GALVAN. BEARING CLOSURE	FERMETURE ROULEMENT ZN	LAGERVERSCHLUSS ZN	CIERRE COJINETE ZN
62	F01060040	BUL.M 8X1,25X 20 U5732 4.6 ZG	BOLT 8 X20 5732 4.6 GALVANIZED	VIS 8 X20 5732 4.6 ZN	SCHRAUBE 8 X20 5732 4.6 ZN	TORNILLO 8 X20 5732 4.6 ZN
63	F01420048	ROS.M8 8,4X 24X 2 U6593 ZN	PLANE WASHER D.8	RONDELLE D.8	SCHEIBE D.8	ARANDELA D.8
64	G16610210	ASS.LIMITATORE PROFONDITA'	LIMITER DEPTH COUPLYNG	GR. ASS. LIMITEUR DE PROFONDEU	TIEFENBEGRENZERKOMPLEX	CONJ. LIMITADOR DE PROFUNDIDAD
65	G14218233	SUPPORTO DX CORTO	RIGHT SUPPORT SHORT	SUPPORT DRT COURT	HALTERUNG RE KURZER	SOPORTE DER CORTO
66	G14218243	SUPPORTO SX CORTO	LEFT SUPPORT SHORT	SUPPORT GCH COURT	HALTERUNG LI KURZER	SOPORTE IZQ CORTO
67	G14217050	TIRANTE SUPPORTO SEGNAF.	ROW MARKER SUPPORT TIE ROD	TRINGLE SUPPORT TRACEUR	SPANNSTANGE HALTERUNG SPURR.	TIRANTE SOPORTE MARCADOR
68	G18801410	BOCCOLA 15,1 X25 X57	BUSHING 15,1 X25 X57	BOITE 15,1 X25 X57	B_CHSE 15,1 X25 X57	CASQUILLO 15,1 X25 X57
69	F01020212	VITE M14X 2X 90 U5737 8.8 ZN	BOLT 14X90 5737 8.G GALVANIZ.	VIS 14X90 5737 8.G ZN	SCHRAUBE 14X90 5737 8.G ZN	TORNILLO 14X90 5737 8.G ZN
70	F01100011	ING.M 6X1 7663-A 9SMNPB28 ZN	SPHERE NIPPLE M6X1/A	GRAISSEUR A BILLES M6X1/A	KUGELFETTBsCHSE M6X1/A	ENGRAS. DE ESFERAS M6X1/A
71	F01020130	VITE M10X 1,5X90 U5737 8.8 ZN	BOLT M 10X90	VIS M 10X90	SCHRAUBE M 10X90	TORNILLO M 10X90

TAV. 300

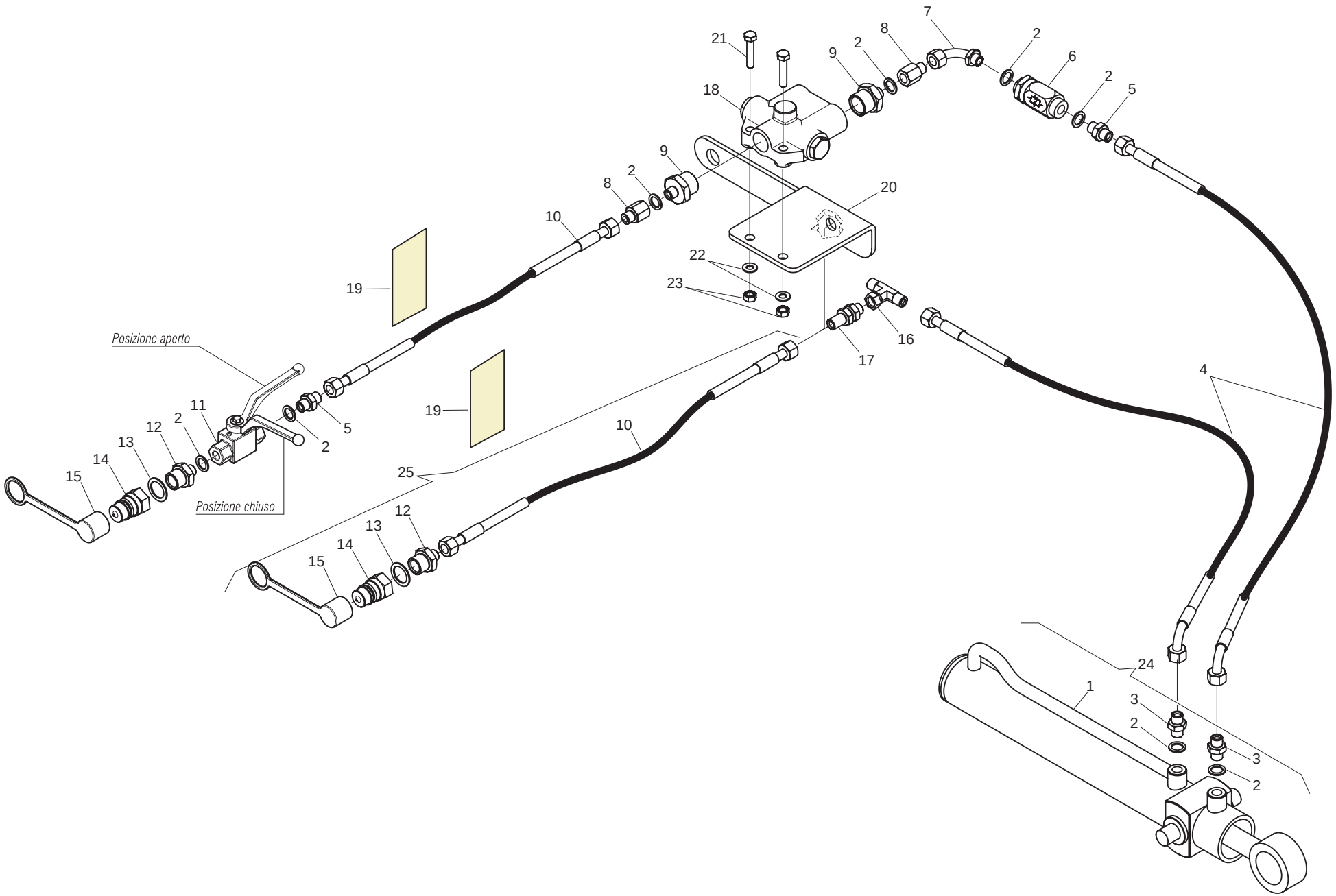

GASPARDO

cod. G19530286

IMPIANTO SEGNAFILE CON TRACCIA CENTRO/RUOTA TRATTORE

TAV. 300

Pos.	Cod.	Descrizione	Description	Description	Benennung	Descripcion
1	G14218170	CILINDRO DE 20X45 -350	CYLINDER DE 20X45 -350	CYLINDRE DE 20X45 -350	ZYLINDER DE 20X45 -350	CILINDRO DE 20X45 -350
2	F03151238	RONDELLA RAME 13X19X1,5 -1/4"	1/4 COPPER WASHER	RONDELLE CUIVRE 1/4	UNTERLEGSCHEIBE KUPFER 1/4	ARANDELA COBRE 1/4
3	G16011690	MONT.NIPPLO 1/4 GRANO F.1,0	UPRIGHT 1/4" NIPPLE WITH GRUB	MONTANT NIPPLE 1/4 AVEC GRAIN	STZNDER NIPPEL 1/4 MIT STIFT 8	MONT.NIPLE 1/4 TORNIL.SIN CABE
4	G16012650	TUBO R2 1/4 C-F L.4000	PIPE 1/4 R2 C-F 1/4 L.4000	TUBE 1/4 R2 C-F 1/4 L. 4000	ROHR 1/4 R2 C-F 1/4 L 4000	TUBO 1/4 R2 C-F 1/4 L.4000
5	F03150266	NIPPLO MM CIL-CIL 1/4-1/4 ZN	NIPPLE GALV.CYL.MALE 1/4 ZN	NIPPLE MALE CYL. 1/4 ZN	NIPPELZYL.1/4 ZN	NIPLE MACHO CIL.1/4 ZN
6	F03151226	REGOL.DI FLUSSO VRF 1/4' GAS	1/4' GAS VALVE VRF	SOUPAPE REG DEBIT VRF 1/4" GAZ	VENITL VRF 1/4' GAS	VæLVULA VRF 1/4' GAS
7	F03150859	CURVA 90°F.GIREV.1/4 - M.1/4	ELBOW 90[F. SWIVEL 1/4 -M.1/4	COUDE 90[F.TOURN.1/4 - M.1/4	KNIESTsCK 90[F.DREHB.1/4 - M.	CURVA 90 F.GIRAT..1/4 - M.1/4C
8	F03151194	PROLUNGA CORTA 036 1/4	SHORT EXTENSION 036 1/4	RALLONGE COURTE 036 1/4	KURZE VERLZNGERUNG 036 1/4	PROLONG. CORTA 036 1/4
9	F03150122	NIPPLO MM 3/4 JIC OR 1/4 OR ZG	NIPPLE- 3/4 JIC OR - 1/4	NIPPLE 3/4 JIC OR - 1/4	NIPPEL 3/4 JIC OR - 1/4	NIPLE 3/4 JIC OR - 1/4
10	G22270463	TUB.TR.1/4R2 F-F 1/4 L1500 LM	TUBE TR.1/4R2 F-F1/4 L1500 LM	TUB.TR.1/4R2 F-F 1/4 L1500 LM	ROHR1/4R2 F-F 1/4 L1500 LM	TUB.TR.1/4R2 F-F 1/4 L1500 LM
11	F03151245	RUBINETTO F-F 1/4	COCK F.-F. 1/4"	ROBINET F.-F. 1/4"	HAHN F.-F. 1/4"	GRIFO H.-H. 1/4"
12	F03150211	NIPPLO MM CIL-CIL 1/2-1/4 ZN	NIPLE 1/4-1/2	NIPLE 1/4-1/2	NIPLE 1/4-1/2	NIPLE 1/4-1/2
13	F03151237	RONDELLA RAME 21X27X1,5 -1/2"	1/2 COPPER WASHER	RONDELLE CUIVRE 1/2	UNTERLEGSCHEIBE KUPFER 1/2	ARANDELA COBRE 1/2
14	F03150935	INNESTO RAP.MASCH.1/2 A VALV.	QUICK CONNECT MALE CONE 1/2 CO	CONNEXION RAPIDE MALE CONE 1/2	SCHNELLKUPPLUNG GEWINDE KONISC	ACOPLAMIENTO RAPIDO MACHO CONO
15	F05150325	CAPPUCCIO PROT.INNESTO RAP.1/2	COVER 1/2	COUVERCLE 1/2	DECKEL 1/2	TAPA 1/2
16	F03151216	RACCORDO -T- CENTR.M-FG-M 1/4	UNION T M-M-F 1/4' ZN	RACCORD T M-M-F ª' ZN	ANSCHLUSSTsCK TM-M-F 1/4' ZN	UNIN T M-M-F 1/4' ZN R
17	F05010359	PASSAPARETE 1/4M-1/4M	FAIRLEAD 1/4M-1/4M	TUILE EN 1/4M-1/4M	VOR_BERGEHENDE 1/4M-1/4M	PASTECA 1/4M-1/4M
18	F03150577	VALVOLA SEGNAF.CROSS SQV	ROW MARKER VALVE ATI C128513	SOUPAPE TRACEUR C.SQV	VENTIL SPURREISSER ATI C128513	VæLVULA MARCAFILAS ATI C128513
19	G19702880	DECAL.MOVIMENT.SEGNAFILE	STICKER	DECALCOMANIE	ABZIEHBILDER	CALCOMANIAS
20	G14217082	SUPPORTO VALVOLA	VALVE SUPPORT	SUPPORT SOUPAPE	VENTILHALTERUNG	SOPORTE V+LVULA
21	F01020068	VITE M 8X1,25X40 U5737 8.8 ZN				
22	F01410051	ROS.M8 8,4X 17X1,6 U6592 ZN	PLANE WASHER D.8	RONDELLE D.8	SCHEIBE D.8	ARANDELA D.8
23	F01200244	DADO M 8X1,25 U5588 6.8 ZN	NUT M8	ECROU M8	MUTTER M8	DADO M8
24	G14218300	CILINDRO SEGNAFILE	ROW MARKER CYLINDER	CYLINDRE TRACEUR	SYLINDER REIHENANREISSER	CILINDRO MARCADOR DE FILAS
25	G13811211	TUBO X COLLEG. AL TRATTORE	PIPE FOR CONNECTION TO TRACTOR	TUBE POUR CONN. AU TRACTEUR	ROHR F. KUPPLUNG AM SCHLEPPER	TUBO P/CONEXIN AL TRACTOR T

TAV. 320

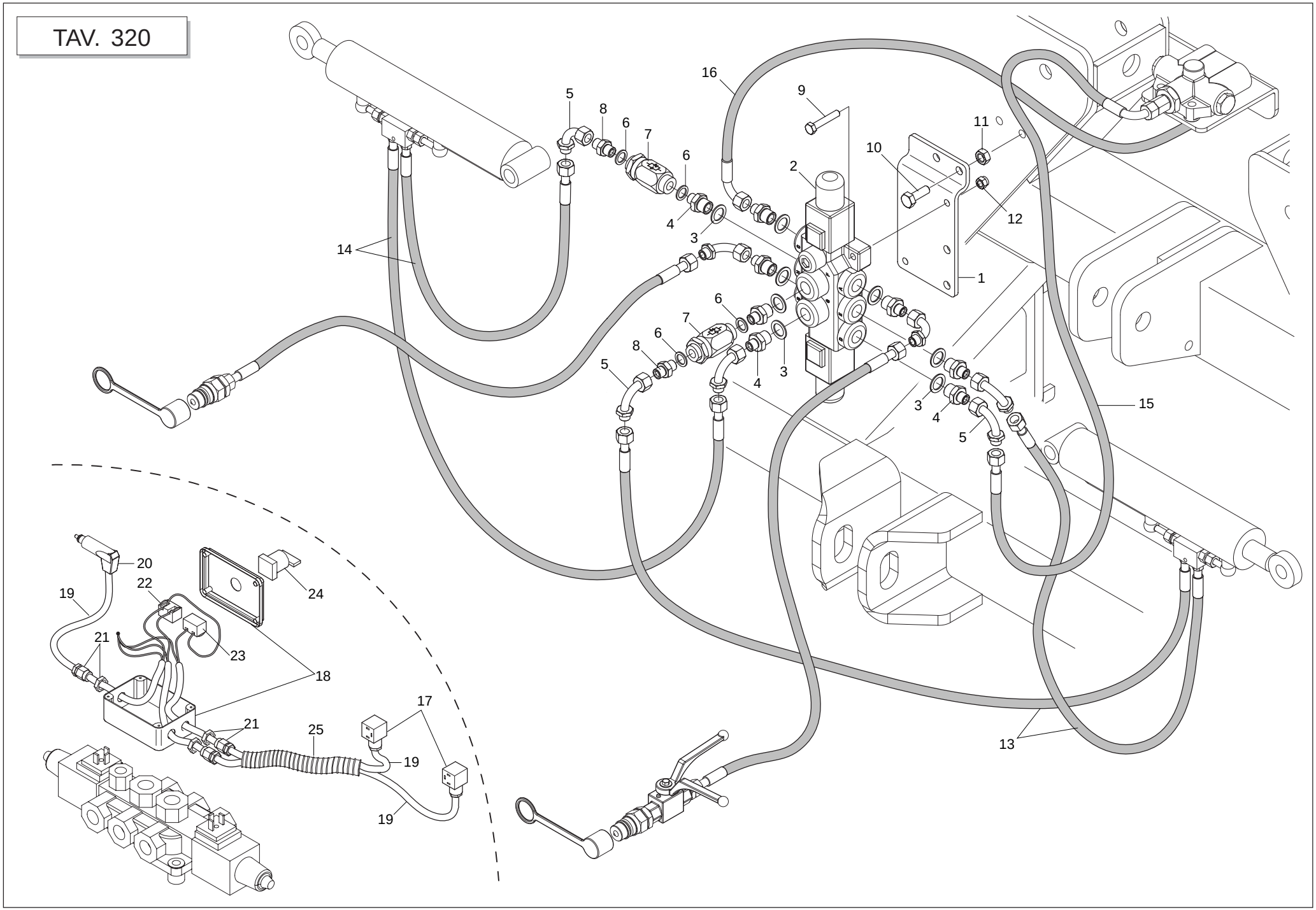

GASPARDO

IMPIANTO GENERALE CON CENTRALINA

TAV. 320

Pos.	Cod.	Descrizione	Description	Description	Benennung	Descripcion
1	G14217641	SUPPORTO VALVOLA	VALVE SUPPORT	SUPPORT SOUPAPE	VENTILHALTERUNG	SOPORTE V+LVULA
2	F05010294	DEVIATORE COMANDO 3 POSIZIONI	3 POSITIONS CONTROL DEVIATOR	DEVIATEUR COMMANDE 3 POSITIONS	ABLENKER STEUERUNG 3 POSITIONE	DESVIADOR MANDO 3 POSICIONES
3	F03151240	RONDELLA RAME 17X23X1,5 -3/8"	3/8 COPPER WASHER	RONDELLE CUIVRE 3/8	UNTERLEGSCHEIBE KUPFER 3/8	ARANDELA COBRE 3/8
4	F03150310	NIPPLO MM CIL-CIL 3/8-1/4 ZN	NIPPLE GALV.CYL.MALE3/8-1/4 ZN	NIPPLE MALE CYL.3/8-1/4 ZN	NIPPELZYL.3/8-1/4 ZN	NIPLE MACHO CIL.3/8-1/4 ZN
5	F03150859	CURVA 90°F.GIREV.1/4 - M.1/4	ELBOW 90[F. SWIVEL 1/4 -M.1/4	COUDE 90[F.TOURN.1/4 - M.1/4	KNIESTsCK 90[F.DREHB.1/4 - M.	CURVA 90 F.GIRAT..1/4 - M.1/4C
6	F03151238	RONDELLA RAME 13X19X1,5 -1/4"	1/4 COPPER WASHER	RONDELLE CUIVRE 1/4	UNTERLEGSCHEIBE KUPFER 1/4	ARANDELA COBRE 1/4
7	F03151226	REGOL.DI FLUSSO VRF 1/4' GAS	1/4' GAS VALVE VRF	SOUPAPE REG DEBIT VRF 1/4" GAZ	VENITL VRF 1/4' GAS	VæLVULA VRF 1/4' GAS
8	F03150266	NIPPLO MM CIL-CIL 1/4-1/4 ZN	NIPPLE GALV.CYL.MALE 1/4 ZN	NIPPLE MALE CYL. 1/4 ZN	NIPPELZYL.1/4 ZN	NIPLE MACHO CIL.1/4 ZN
9	F01020070	VITI M 8X1,25X45 U5737 8.8 ZN	BOLT 8 X45 5737 8.G GALVANIZED	VIS 8 X45 5737 8.G ZN	SCHRAUBE 8 X45 5737 8.G ZN	TORNILLO 8 X45 5737 8.G ZN
10	F01020476	VITE M10X 1,5X30 U5739 8.8 ZN	BOLT M 10X30	VIS M 10X30	SCHRAUBE M 10X30	TORNILLO M 10X30
11	F01200270	DADO M10X 1,5 U5588 6.8 ZN	NUT M10	ECROU M10	MUTTER M10	DADO M10
12	F01230034	DADO M 8X1,25 D982 8	SELF LOCKING NUT M8X1,25	ECROU AUTOBL. M8X1,25	SELBSTSP.MUTT. M8X1,25	DADO AUTOBL. M8X1,25
13	G23440517	TUBO 1/4R2 C-F 1/4 L2000 HL/ID	PIPE 1/4R2 C-F 1/4 L2000 HL/ID	TUBE 1/4R2 C-F 1/4 L2000 HL/ID	ROHR 1/4R2 C-F 1/4 L2000 HL/ID	TUBO 1/4R2 C-F 1/4 L2000 HL/ID
14	G15310732	TUBO 1/4R2 CF45 1/4-F 1/4 1500				
15	G16011680	TUBO 1/4' R2 C-F 1/4' L.900	PIPE 1/4'R2 C-F 1/4'L.900	TUBE 1/4'R2 C-F 1/4'L. 900	ROHR 1/4'R2 C-F 1/4'L 900	TUBO 1/4'R2 C-F 1/4'L.900
16	G17911270	TUBO 1/4R2 CF-F L. 700	PIPE 1/4R2 CF-F L. 700	TUBE 1/4R2 CF-F L. 700	ROHR 1/4R2 CF-F L. 700	TUBO 1/4R2 CF-F L. 700
17	F05010294	DEVIATORE COMANDO 3 POSIZIONI	3 POSITIONS CONTROL DEVIATOR	DEVIATEUR COMMANDE 3 POSITIONS	ABLENKER STEUERUNG 3 POSITIONE	DESVIADOR MANDO 3 POSICIONES
18	F05010377	SCATOLA ELETTRICA 120X80X50	CONTROL BOX W/ WIRES 120X80X50	BOITE AVEC FILS 120X80X50	EHZUSE M. LEITUNGEN 120X80X50	CAJA CON CABLES 120X80X50
19	F05010078	CAVO FLESSIBILE 2FILIX1	FLEXIBLE CABLE 2FILIX1	CABLE FLEX. 2FILIX1	FLEX. KABEL 2FILIX1	CABLE FLEX. 2FILIX1
20	F05010189	ATTACCO ALL'ACCENDISIGARI	CONNECTION	CONNECTION	VERBINDUNG	CONEXIËN
21	F05010363	PRESSACAVO PG16	CABLE PRESS PG16	PRESSE-CABLE PG16	KABELPRESSE PG16	APRIETACABLE PG16
22	F05010309	ELEMENTO DI CONTATTO V40	CONNECTOR V40	CONNECTEUR V40	VERBINDER V40	CONECTOR V40
23	F05010310	ELEMENTO DI CONTATTO V50	CONNECTOR V50	CONNECTEUR V50	VERBINDER V50	CONECTOR V50
24	F05010383	SELETTORE MANOPOLA	SELECTOR KNOB	SELECTEUR BOUTON	DREHGRIFF WZHLER	SELECTOR PERILLA
25	F05010079	GUAINA ELETTR.SPIRALATA D.16	SPIRAL ELECTR. SHEATH D.16	GAINE +LECTR. SPIRAL+E D.16	ELEKTR. SPIRALMANTEL D.16	VAINA EL+CTR. ESPIRAL Ï16

TAV. 074

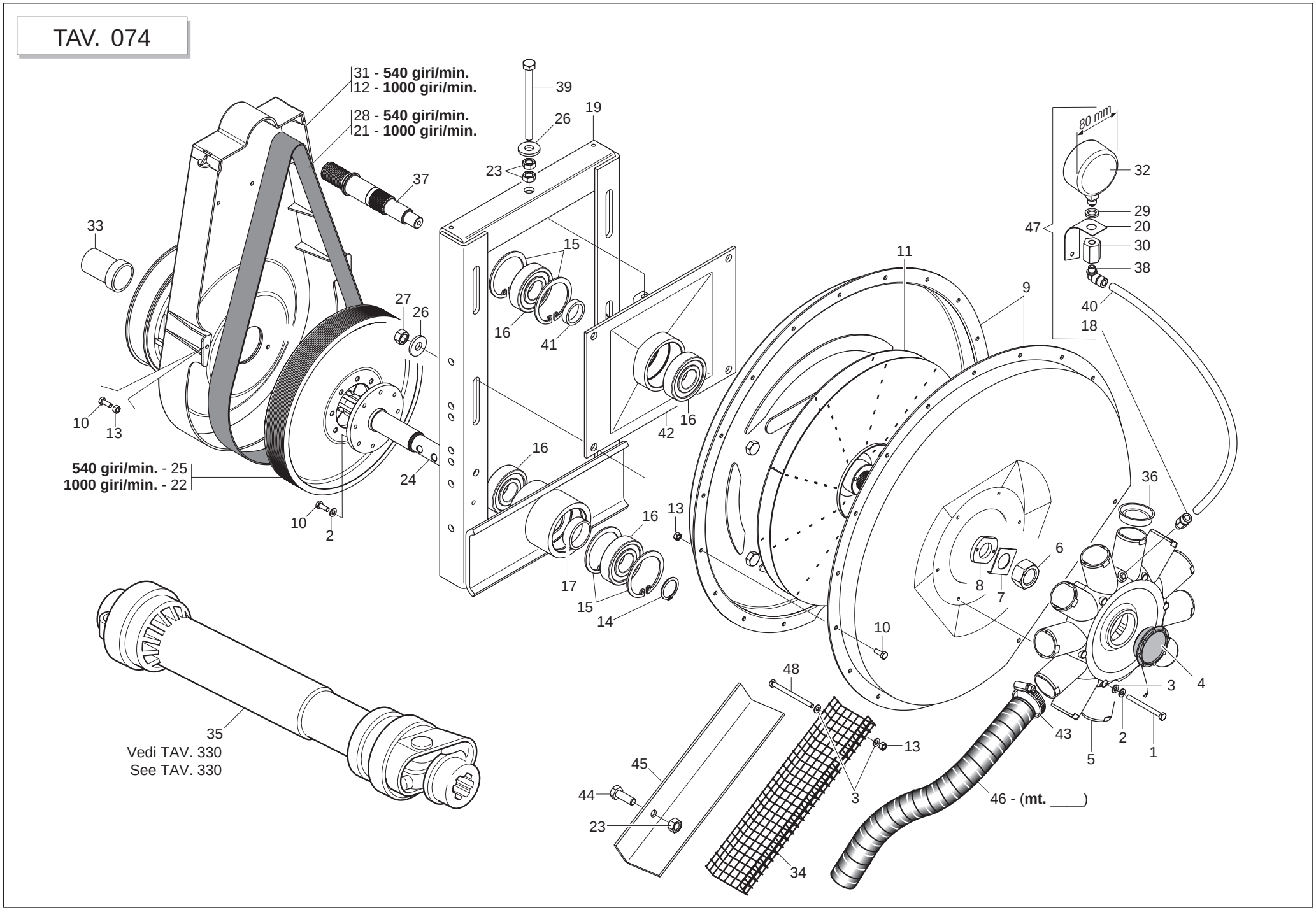

GASPARDO

DEPRESSORE

TAV. 074

Pos.	Cod.	Descrizione	Description	Description	Benennung	Descripcion
1	F01020047	VITE M 6X 1X 70 U5737 8.8 ZN	BOLT 6 X70 5737 8.G GALVANIZED	VIS 6 X70 5737 8.G ZN	SCHRAUBE 6 X70 5737 8.G ZN	TORNILLO 6 X70 5737 8.G ZN
2	F01430047	ROS.M6 6,4X 11X0,7 U8842J ZN	WASHER D6 DIN 6798 D.INT.GALV.	RONDELLE D6 DIN 6798 D. INT. Z	UNT. SCHEIBE D6 DIN 6798 D. IN	ARANDELA D6 DIN 6798 D.INT.ZN
3	F01420036	ROS.M6 6,4X 18X 2 U6593 ZN	FLAT WASHER 6-6X 18X2 6593 ZN	ROND. PLATE 6-6X 18X2 6593 ZN	SCHEIBE 6-6X 18X2 6593 ZN	ARAND. PLANA 6-6X 18X2 6593 ZN
4	F03150722	TAPPO 700 M52X2	M52 X 2 PLUG	BOUCHON M52 X 2	PFROPFEN M52 X 2	TAPN M52 X 2 D
5	G19004480	CONVOGLIATORE 12 USCITE	CONVEYOR 12 OUTLETS	CONVOYEUR 12 SORTIES	TRICHTER MIT 12 AUSG-NGEN	TRANSPORTADOR 12 SALIDAS
6	F01230143	DADO M24X 2 D982 8 ZN	NORMAL SELF-LOCK.NUT 24X2 GAL	ECROU AUTOB. NOR. 24X2 ZN	MUTTER AUTOB.NOR.24X2 ZN	TUERCA AUTOB. NOR.24X2 ZN
7	G13912060	PIASTRINA DI TENUTA	STOP PLATE	PLAQUETTE DE TENUE	DICHTPLZTTCHEN	PLACA DE RETENCIN P
8	G13912050	RONDELLA DI FERMO	STOP WASHER	RONDELLE DE BLOCAGE	FESTSTELLSCHEIBE	ARANDELLA DE BLOQUEO
9	G22230335	INVOLUCRI DEPRESSORE	VACUUM PUMP CASINGS	ENVELOPPES DEPRESSEUR H	sLLEN VAKUUMPUMPE C	AJAS BOMBA VACO CA
10	F01020403	VITE M 6X 1X 16 U5739 8.8 ZN	BOLT M 6X16	VIS M 6X16	SCHRAUBE M 6X16	TORNILLO M 6X16
11	G22230015	GIRANTE	IMPELLER	ROUE TURBINE	LAUFRAD	RODETE
12	G15450500	PROTEZIONE CINGHIA 1000 GIRI	BELT GUARD 1000 RPM	PROTECTION COURROIE 1000 TOURS	RIEMENSCHUTZ 1000 UMDR.	PROTECCIN CORREA 1000 REV. P
13	F01220011	DADO M 6X 1 D980 8 ZN	SELF LOCKING NUT M6	ECROU AUTOBL. M6	SELBSTSPERR.MUTTER M6	DADO AUTOBL. M6
14	F02050112	ANELLO E. DE 30X 1,5 U7435 C70	SEEGER RING 30X 1,5 U7435 C70	SEEGER E. 30 X 1,5 U7435 C70	SEEGERING E. 30X 1,5 U7435 C70	ANILLO E. 30 X 1,5 U7435 C70
15	F02050403	ANELLO E. DI 72X 2,5 U7437 C70	SEEGER RING E.72X2,5 U7437 C70	SEEGER E. 72X 2,5 U7437 C70	SEEGERING E. 72X 2,5 U7437 C70	ANILLO E. 72X 2,5 U7437 C70
16	F04010215	CUSC.D30 D72 B19 6306 2RSC3 EX	BEARING 6306 2RS C3	PALIER 6306 2RS C3	LAGER 6306 2RS C3	COJINETE 6306 2RS C3
17	G22230010	DISTANZIALE CUSCINETTI	BEARING SPACER	ENTRETOISE PALIERS	DISTANZSTsCK LAGER	DISTANCIADOR COJINETES
18	F03151206	RACCORDO DIR. C1 1/8' 6/8	UNION STRAIGHT C1 1/8" 6/8	RACCORD DRT. C1 1/8" 6/8	ANSCHLUSSTsCK GERADE C1 1/8"	UNIN DER. C1 1/8" 6/8 R
19	G15850200	INCASTELLATURA DEPRESSORE	DIFFUSION AIR PUMP FRAME	B-TI POMPE A D+PRESSION	GESTELL VAKUUMPUMPE	ARMAZËN BOMBA VAC-O
20	G22270134	SUPPORTO VACUOMETRO SP	VACUUM METER SUPPORT SP	SUPPORT VACUOMETRE SP	HALTERUNG VAKUUMMETER SP	SOPORTE VACUMETRO SP S
21	F06010161	CINGHIA POLY-V 1016 J-16 GOLE	BELT- POLY V 1016 J-16 GOLE	COURROIE POLY-V 1016 J-16 GORG	RIEMEN POLY-V 1016 J-16 RILLEN	CORREA POLY-V 1016 J-16 GARGA
22	G15450310	PULEGGIA MOTRICE 1000 GIRI	DRIVING PULLEY 1000 REVS	POULIE MOTRICE 1000T	ANTRIEBSSCHEIBE 1000 UMDREHUNG	POLEA MOTRIZ 1000 REVOLUCIONES
23	F01200270	DADO M10X 1,5 U5588 6.8 ZN	NUT M10	ECROU M10	MUTTER M10	DADO M10
24	G22270369	P.DI P.CON CODOLO	POWER TAKE-OFF- W/ SPIGOT	PRISE DE FORCE AVEC CONE	KRAFTABTRIEB MIT ENDSTsCK	TOMA DE FUERZA CON MANGO
25	G22230012	PULEGGIA MOTRICE	DRIVING PULLEY	POULIE MOTRICE 540T	ANTRIEBSSCHEIBE	POLEA MOTRIZ
26	G20970035	RONDELLA 32X4X13	WASHER 32X4X13	RONDELLE 32X4X13	UNTERLEGSCHEIBE 32X4X13	ARANDELA 32X4X13
27	F01200293	DADO M12X1,75 U5588 6.8 ZN	NUT M12	ECROU M12	MUTTER M12	DADO M12
28	F06010160	CINGHIA POLY V 1287 J-16 GOLE	BELT- POLY V 1287 J-16 GOLE	COURROIE POLY V 1287 J-16 CANN	RIEMEN POLY V 1287 J-16 RILLEN	CORREA POLY V 1287 J-16 GARGAN
29	F05150479	ROND.APPOGGIO MANOMETRI SV	PRESSURE GAUGE REST WASHER	ROND. LOGEMENT MANOMETRES SV	STsTZSCHEIBE MANOMETER SV	ARAND. SOPORTE MANOMETROS SV
30	G22250274	COLLEGAMENTO MANOMETRI SP-SV	PRESSURE GAUGE CONNECT. SP-SV	RACCORD MANOMETRES SP-SV	VERBINDUNG MANOMETER SP-SV	CONEXIN MANMETROS SP-SV LE
31	G15450342	PROTEZ.CINGHIA DEPRES.COMPLETO				
32	F03151288	VACUOM.0-100 MBAR C.SM.INC.D80				
33	G66248227	CUFFIA PROTEZIONE P.D.P.	POWER TAKE-OFF PROTECTION HOUS	PROTECTEUR PRISE DE PUISSANCE	SCHUTZKASTEN KRAFTABTRIEB	ENVOLTURA PROTECCIN T. DE P. G
34	G10150291	GRIGLIA PROTEZIONE ZN	AIR PUMP PROTECT. GRID	GRILLE DE PROTECT.DISP. DEPRES	SCHUTZGITTER VAKUUMPUMPE	REJILLA DE PROTECCIN BOMBA VAG
35	F08011711	CARD.B1 Z6-Z6 L700	UNIVERSAL JOINT S10 0700F 112	CARD NORM S10 0700F1121121CAT	KARDAN S10 0700F 112 112 1CAT	CARDæN S10 0700F 112 112 1CAT
36	F05050020	TAPPO SALVAFILETTO D.39	CONVEYOR PLUG D.39	BOUCHON PROTEGE-FILET D. 39	GEWINDESCHUTZPFROPFEN D.39	TAPN GUARDARROSCA D.39 D
37	G15450390	PULEGGIA CONDOTTA	DRIVEN PULLEY D.28	POULIE ENTRAINEE D. 28	GETRIEBENE SCHEIBE D.28	POLEA CONDUCIDA D.28
38	F03151200	RACCORDO 90° C5 1/8' 6/8	UNION 90[C5 1/8" 6/8	RACCORD 90[C5 1/8" 6/8	ANSCHLUSSTsCK 90[C5 1/8' 6/8	UNIN 90 C5 1/8" 6/8 RA
39	G15450270	VITE 10X130 8.8 FIL.60 ZN	GALVANIZ. SCREW 10X130 8.8 FIL	VIS 10X130 8.8 FIL.60 ZN	SCHRAUBE 10X130 8.8 GEW.60 ZN	TORNILLO 10X130 8.8 FIL.60 ZN
40	F03100391	TUBO POLIURETANO 8-6				
41	G22230014	DISTANZIALE	SPACER	ENTRETOISE	DISTANZSTsCK	DISTANCIADOR
42	G15450091	SUPPORTO PULEGGIA CONDOTTA	DRIVEN PULLEY SUPPORT	SUPPORT POULIE ENTRAINEE	HALTERUNG GETRIEBENE RIEMENSCH	SOPORTE POLEA CONDUCIDA
43	F05150058	FASCETTA POLYAM.7,8X550 31920	POLYAMIDE FASTENING STRAPS 9X5	COLLIER POLYAMIDE 9X508 31920	SCHELLE POLYAMID 9X508 31920	ABRAZADERA POLIAMIDA 9X508 319
44	F01020472	VITE M10X 1,5X25 U5739 8.8 ZN	BOLT 10X25 5739 8.G GALVANIZED	VIS 10X25 5739 8.G ZN	SCHRAUBE 10X25 5739 8.G ZN	TORNILLO 10X25 5739 8.G ZN
45	G15450280	PROTEZIONE DEPRESSORE	VACUUM PUMP PROTECTION	PROTECTION DEPRESSEUR	SCHUTZ VAKUUMPUMPE	PROTECCIN BOMBA DE VACO PR
46	F03100506	TUBO EOLO 45 NL1	EOLO PIPE 45 PU			
47	G22270093	VACUOMETRO COMPL. SP LM	VACUUM METER ASSY. SP LM	VACUOMETRE COMPL. SP LM	KOMPL. VAKUUMMETER SP LM	VACUMETRO COMPL. SP LM V
48	F01020050	VITE M 6X 1X 80 U5737 8.8 ZN	BOLT 6 X80 5737 8.G GALVANIZED	VIS 6 X80 5737 8.G ZN	SCHRAUBE 6 X80 5737 8.G ZN	TORNILLO 6 X80 5737 8.G ZN

TAV. 081

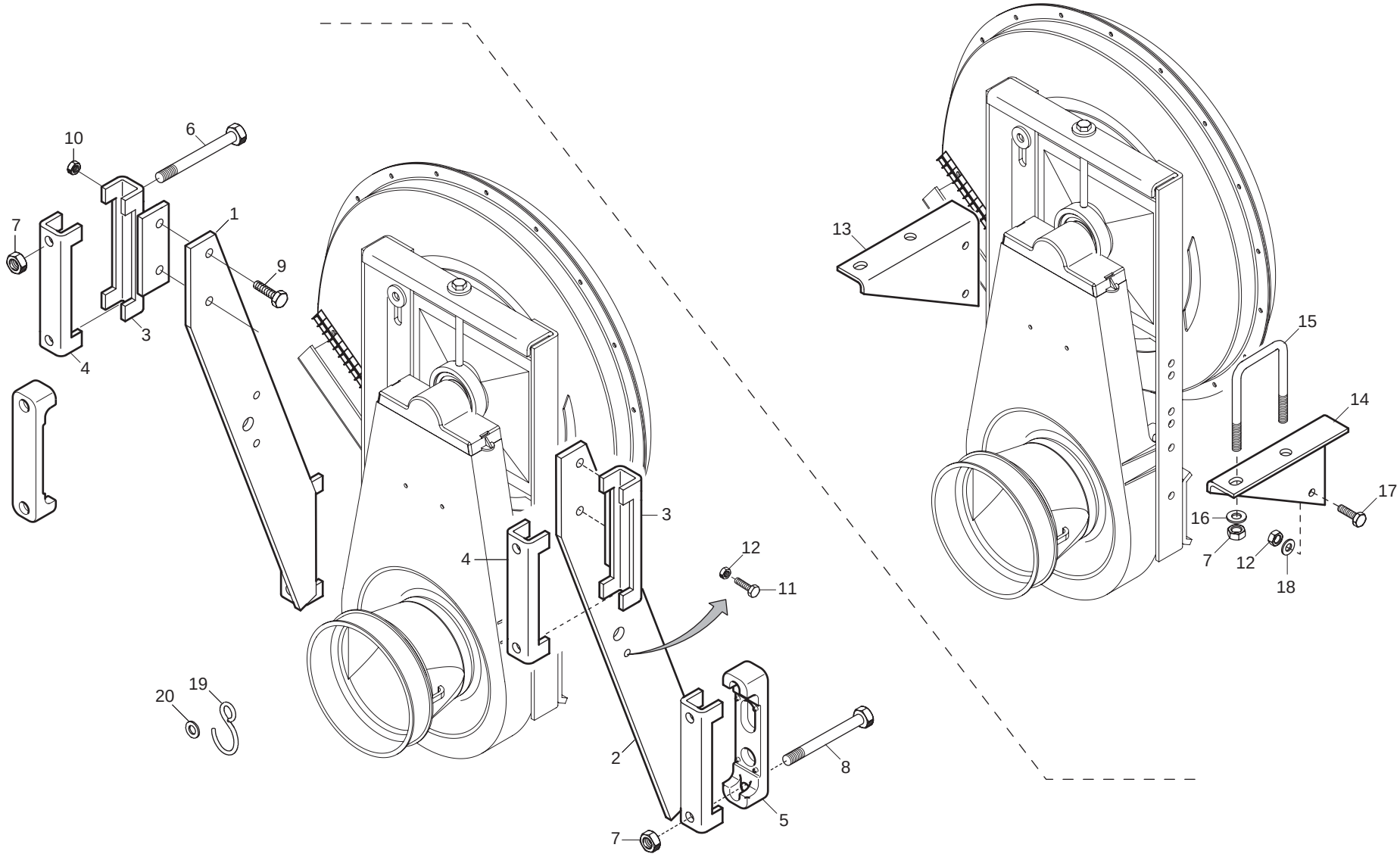

GASPARDO

SUPPORTI DEPRESSORE

TAV. 081

Pos.	Cod.	Descrizione	Description	Description	Benennung	Descripcion
1	G14255050	SUPPORTO INCASTELLATURA DX	RIGHT CASING SUPPORT	SUPPORT BATI DRT	HALTERUNGGESTELL RE	SOPORTE BASTIDOR DER
2	G14255040	SUPPORTO INCASTELLATURA SX	RIGHT CASING SUPPORT	SUPPORT BATI DRT	HALTERUNGGESTELL RE	SOPORTE BASTIDOR DER
3	G14255020	ATTACCO DEPRESSORE	VACUUM PUMP ATTACHMENT	FIXATION DEPRESSEUR	VAKUUMPUMPENANSCHLUSS	CONEXIN BOMBA DE VACO OP
4	G14255000	SCONTRO 120	STRIKER 120	BUTEE 120	ANSCHLAG 120	ELEM. DE EMPALME 120
5	G19204030	SCONTRO FISS.150 2F D15				
6	F01020229	VITE M14X 2X180 U5737 8.8 BR	SCREW 14X180 5737 8.G	VIS 14X180 5737 8.G	SCHRAUBE 14X180 5737 8.G	TORNILLO 14X180 5737 8.G
7	F01200306	DADO M14X 2 U5588 6.8 ZN	NUT M14X2	ECROU M14X2	MUTTER M14X2	DADO M14X2
8	F01020225	VITE M14X 2X160 U5737 8.8 BR	BOLT M 14 X160 5737 8.G	VIS M 14 X160 5737 8.G	SCHRAUBE M 14 X160 5737 8.G	TORNILLO M 14 X160 5737 8.G
9	F01020512	VITE M12X1,75X35 U5739 8.8 ZN	SCREW M 12X35	VIS M 12X35	SCHRAUBE M 12X35	TORNILLO M 12X35
10	F01200293	DADO M12X1,75 U5588 6.8 ZN	NUT M12	ECROU M12	MUTTER M12	DADO M12
11	F01020476	VITE M10X 1,5X30 U5739 8.8 ZN	BOLT M 10X30	VIS M 10X30	SCHRAUBE M 10X30	TORNILLO M 10X30
12	F01200270	DADO M10X 1,5 U5588 6.8 ZN	NUT M10	ECROU M10	MUTTER M10	DADO M10
13	G14255111	SUPPORTO DX				
14	G14255121	SUPPORTO SX				
15	F20110775	CAV.Q.M14X 2X 50 135X159 ZN	U BOLT 120	CAVALIER 120	VERBINDUNG 120	PERNO EN U 120
16	F01410088	ROS.M14 15X 28X2,5 U6592 ZN	WAS.M14 15X 28X2,5 U6592 ZB	RON.M14 15X 28X2,5 U6592 ZB	SCH.M14 15X 28X2,5 U6592 ZB	ARA.M14 15X 28X2,5 U6592 ZB
17	F01020472	VITE M10X 1,5X25 U5739 8.8 ZN	BOLT 10X25 5739 8.G GALVANIZED	VIS 10X25 5739 8.G ZN	SCHRAUBE 10X25 5739 8.G ZN	TORNILLO 10X25 5739 8.G ZN
18	F01430023	ROS.M10 10,5X 18X0,9 U8842J ZN	WASHER D10 DIN 6798 D.INT.ZN	RONDELLE D10 DIN 6798 D. INT.	UNT. SCHEIBE D10 DIN 6798 D.IN	ARANDELA D10 DIN 6798 D.INT.ZN
19	G65336004	MOLLA SPEC.ZN AGG.SEMINAT. SP	SPEC SPRING- ZN ADD. SEEDER SP	RESSORT SPEC. ZN ATTELAGE SEME	SPEZIALFEDER ZN SZELEM. KUPPL.	MUELLE ESPEC. ZN CONEX. SEMBRA
20	G18700690	RONDELLA 15 X40 X6 ZN	WASHER 15 X 40 X 6 ZN	RONDELLE 15 X40 X6 ZN	UNTERLEGSCHEIBE 15 X40 X6 ZN	ARANDELA 15 X40 X6 ZN

TAV. 094

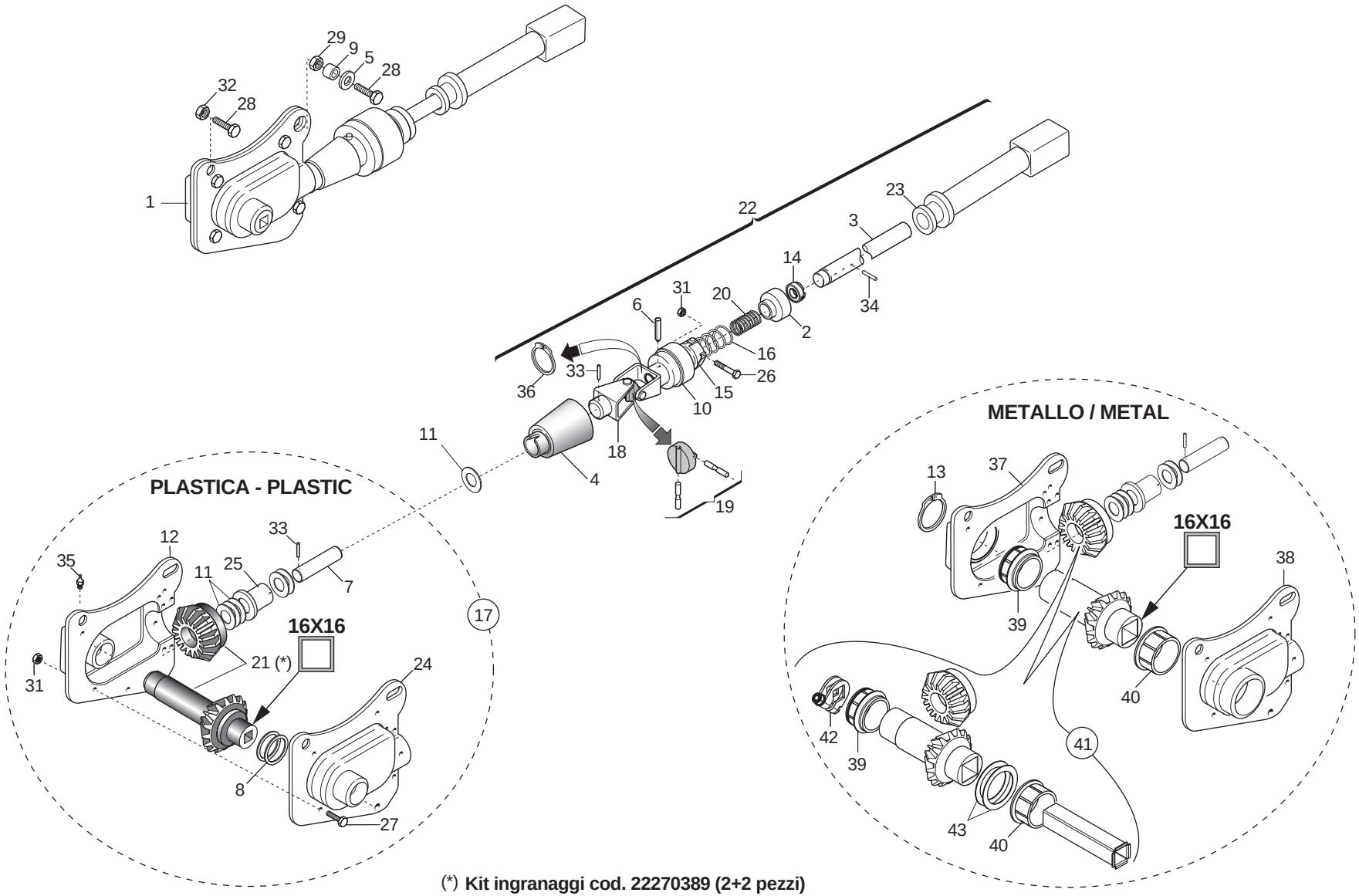

(*) **Kit ingranaggi cod. 22270389 (2+2 pezzi)**

SCATOLA DI RINVIO ELEMENTO

TAV. 094

Pos.	Cod.	Descrizione	Description	Description	Benennung	Descripcion
1	G16621060	MONT.SCATOLA RINVIO Q.16 EL.SP				
2	G66248102	ANELLO SICUREZZA SP	SAFETY RING	BAGUE SECURITE SP	SICHERHEITSRING SP	ANILLO DE SEGURIDAD SP
3	G15220691	ASSE AVVISATORE MT	SIGNALLING AXIS MT	AXE AVERTISSEUR MT	ACHSE SIGNALHUPE MT	EJE INDICADOR MT
4	G19002840	COPRICARDANO SUPERIORE	TOP CARDAN JOINT COVER	COUVRE-CARDAN SUPERIEUR	OBERE KARDANABDECKUNG	CUBRECARDæN SUPERIOR
5	G20970032	RONDELLA 32X4X8,5	WASHER 32X4X8-5	RONDELLE 32X4X8-5	UNTERLEGSCHEIBE 32X4X8-5	ARANDELA 32X4X8-5
6	G66248057	SPINA DI SICUREZZA SP	SAFETY PIN SP	BROCHE PLASTIC SECURITE CARDAN	SICHERHEITSSTIFT SP	CLAVIJA DE SEGURIDAD SP
7	G22270452	ALBERO SCATOLA RINVIO SP/S	INTERMEDIATE BOX SHAFT	ARBRE TRANSMISSION SP/S	WELLE VORGELEGEGEHZUSE SP/S	æRBOL CAJA DE TRANSMISIN SP/SA
8	G20970051	RONDELLA 40X0,6X32	WASHER 40X0-6X32	RONDELLE 40X0-6X32	UNTERLEGSCHEIBE 40X0-6X32	ARANDELA 40X0-6X32
9	G20980024	BOCCOLA 15X8,5X8	BUSHING 15X8-5X8	BOITE 15X8-5X8	BsCHSE 15X8-5X8	CASQUILLO 15X8-5X8
10	G22220071	AVVISATORE ACUSTICO	HOOTER	SIGNALISATION ACOUSTIQUE	HUPE	INDICADOR ACSTICO A
11	G22220073	RONDELLA 28X0,3X16,5	WASHER 28X0-3X16-5	RONDELLE 28X0-3X16-5	UNTERLEGSCHEIBE 28X0-3X16-5	ARANDELA 28X0-3X16-5
12	G22220102	CONCHIGLIA DX	RIGHT SHELL	COQUILLE DRT.	SCHALE RECHTS	MOLDE DER.
13	F02050179	ANELLO E. DE 42X U7435				
14	G22220105	BOCCOLA DI SPINTA	THRUST BUSHING	BOITE DE POUSSEE	SCHUBBsCHSE	CASQUILLO DE APRIETE
15	G22220155	ELEM.TENUTA MOLLE COMP.	SPRING SEAL ELEMENT ASSY.	ELEMENT D'ETANCHEITE RESSORTS	DICHTUNGSELEMENT FEDERN KOMP.	ELEM. RESISTENCIA MUELLES COMP
16	G65338039	MOLLA COMP.ZN INNESTO SP	ZN COUPLING COMP. SPRING SP	RESSORT COMPL. ZN ACCOUPLEM.	DRUCKFEDER ZN KUPPLUNG SP	MUELLE COMP.ZN ACOPLAMIENTO SP
17	G16033200	MONT.SCATOLA RINVIO PE >	TRANSFER CASE	BOITE RENVOI	VORGELEGEGEHZUSE	CAJA DE DISTRIBUCIN
18	G22270453	SNODO AVVISATORE SP/S	SIGNALLER ARTICULATION SP/S	ARTICULATION SIGNALISATION SP/	HUPGELENK SP/S	ARTICULACIN AVISADOR SP/S A
19	G22270454	CROCIERA COMPL. SP/S	SPIDER SP/S	CROSILLON COMPL CARDAN TRANSM	GELENKKREUZ KOMPL. SP/S	CRUCETA COMPL. SP/S
20	G65338018	MOLLA COMP.ZN SCATOLA RINV.SP	TRANSM. BOX COMP. SPRING . SP	RESSORT COMPL. ZN TRANSMISSION	DRUCKFEDER ZN VORGELEGEGEHZUSE	MUELLE COMP.ZN CAJA TRANSFER..
21	G22270389	2+2 INGR.SCATOLA DI RINVIO >	2+2 INTERM. TRANSM. GEAR BOX	COUPLE CON RENV ANGLE (2+2)	2+2 ZAHNRZDER VORGELEGEGEHZUSE	2+2 ENGRANAJES CAJA DE LA TRAN
22	G16620620	ASSE AVVISATORE SP COMPL.	COMPL. HORN SHAFT SP	AXE AVERTISSEUR SP COMPL.	ACHSE SIGNALHUPE SP KOMPL.	EJE AVISADOR SP COMPL.
23	G15421830	INNESTO	COUPLING	ACCOUPLEMENT	KUPPLUNG	ACOPLAMIENTO
24	G22220103	CONCHIGLIA SX	LEFT SHELL	COQUILLE GCH.	SCHALE LINKS	MOLDE IZQ.
25	G66349001	BOCCOLA	BUSHING	BOITE	B_CHSE	CASQUILLO
26	F01020041	VITE M 6X 1X 45 U5737 8.8 ZN	BOLT 6 X45 5737 8.G GALVANIZED	VIS 6 X45 5737 8.G ZN	SCHRAUBE 6 X45 5737 8.G ZN	TORNILLO 6 X45 5737 8.G ZN
27	F01020403	VITE M 6X 1X 16 U5739 8.8 ZN	BOLT M 6X16	VIS M 6X16	SCHRAUBE M 6X16	TORNILLO M 6X16
28	F01020440	VITE M 8X1,25X25 U5739 8.8 ZN	BOLT M8 X25 5739 8.8 ZN	VIS M8 X25 5739 8.8 ZN	SCHRAUBE M8 X25 5739 8.8 ZN	TORNILLO M8 X25 5739 8.8 ZN
29	F01200244	DADO M 8X1,25 U5588 6.8 ZN	NUT M8	ECROU M8	MUTTER M8	DADO M8
30	F01260021	DADO CIECO M8 U5721 5.8 ZN	CAP NUT M8 5.8 ZN UNI 5721	ECROU BORGNE M8 5.8 ZN UNI 57	BLINDE MUTTER M8 5.8 ZN UNI 57	TUERCA CIEGA M8 5.8 ZN UNI 572
31	F01220011	DADO M 6X 1 D980 8 ZN	SELF LOCKING NUT M6	ECROU AUTOBL. M6	SELBSTSPERR.MUTTER M6	DADO AUTOBL. M6
32	F01220022	DADO M 8X1,25 D980 8 ZN	SELF LOCKING NUT M8X1,25 980V	ECROU AUTOBL. M8X1,25 980-V	SELBSTSP.MUTT. M8X1,25 980-V	DADO AUTOBL. M8X1,25 980-V
33	F02100114	SPINA E.P. 6X 30 U6873 C70 BR	ELASTIC PIN 6X30	GOUJON ELASTIQUE 6X30	SPANNHUELSE 6X30	ESPINA ELASTICA 6X30
34	F02100121	SPINA E.P. 6X 40 U6873 C70 BR	ELASTIC PIN 6X40	GOUJON ELASTIQUE 6X40	SPANNHUELSE 6X40	PASADOR 6X40
35	F01100011	ING.M 6X1 7663-A 9SMNPB28 ZN	SPHERE NIPPLE M6X1/A	GRAISSEUR A BILLES M6X1/A	KUGELFETTBsCHSE M6X1/A	ENGRAS. DE ESFERAS M6X1/A
36	F02050045	ANELLO E. DE 16X 1 U7435 C70	SEEGER RING 16X 1 U7435 C70	BAGUE SEEGER 16 X 1 U7435 C70	SEEGERING 16 X 1 U7435 C70	ANILLO 16X 1 U7435 C70
37	G16620880	ASS.CONCHIGLIA DX				
38	G22505069	CONCHIGLIA SX	LEFT SHELL	COQUILLE GCH.	SCHALE LINKS	MOLDE IZQ.
39	G19005681	BOCCOLA EST.SCATOLA RINVIO				
40	G19005671	BOCCOLA INT.SCATOLA RINVIO				
41	G16621080	KIT INGR.RINVIO ZAMA				
42	G22505085	FERMO ASSE IN LAMIERA	PLATE AXLE STOP	ARRET AXE EN TOLE	FESTSTELLVORRICHTUNG BLECHACHS	BLOQUEO EJE DE CHAPA
43	G20970141	RONDELLA 50X37X0,6	WASHER 50X37X0-6	RONDELLE 50X37X0-6	UNTERLEGSCHEIBE 50X37X0-6	ARANDELA 50X37X0-6

TAV. 104

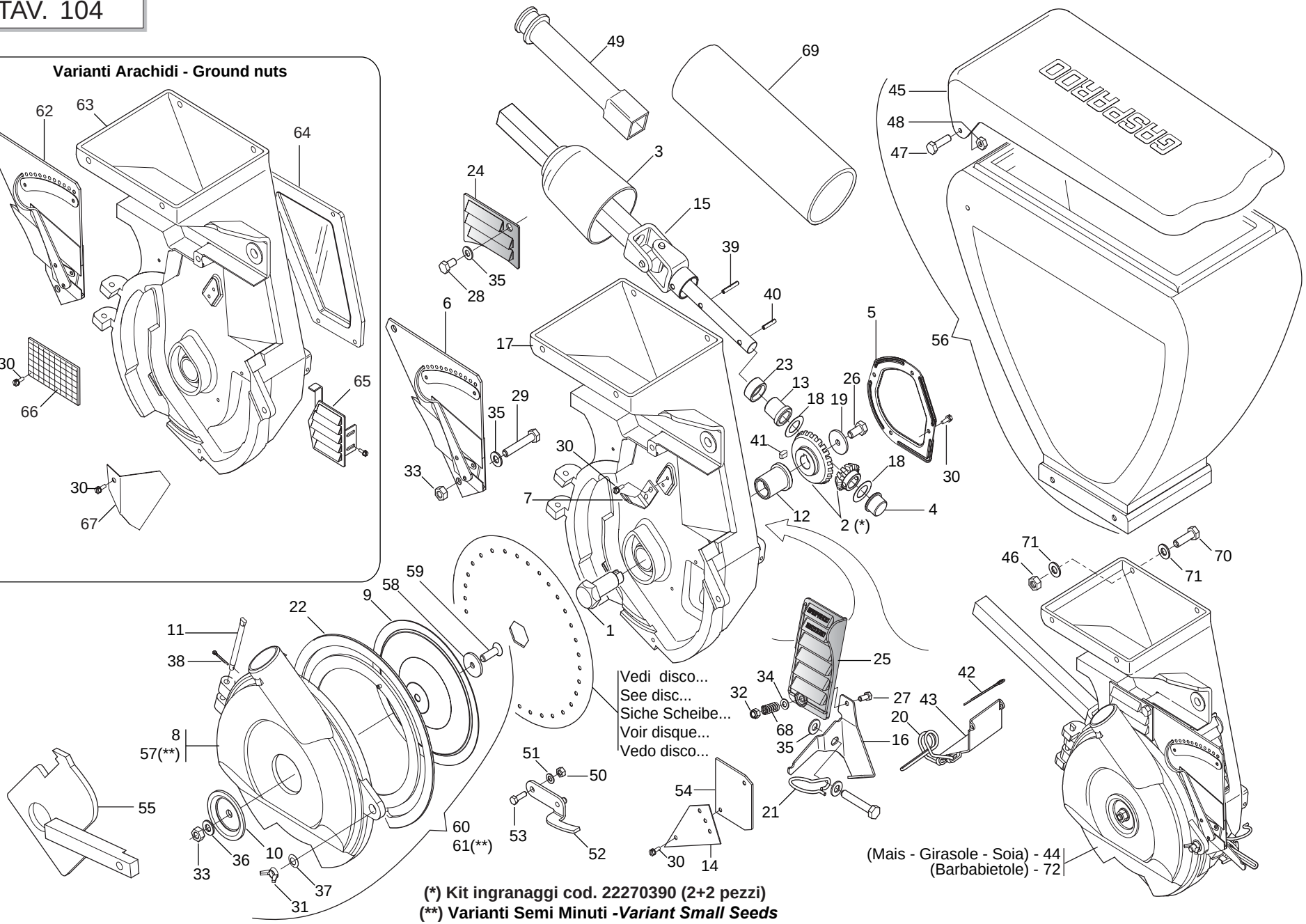

(*) Kit ingranaggi cod. 22270390 (2+2 pezzi)
(**) Varianti Semi Minuti -*Variant Small Seeds*

DISTRIBUTORE SEMI

TAV. 104

Pos.	Cod.	Descrizione	Description	Description	Benennung	Descripcion
1	G22230046	ASSE TRASMISSIONE DISCO	DISK GEAR AXLE	AXE ENTRAINEMENT DISQUE	ACHSE SCHEIBENANTRIEB	EJE TRANSMISIN DISCO A
2	G22270390	KIT COPPIA CONICA DISTRIB.SEMI	KIT- SEED DISTR. CONICAL PAIR	COUPLE CON DISTR GRAINES (2+2)	KIT KEGELTRIEB SAMEN SZAPPARAT	SET PAR CONICO DISTRIB. SEMILL
3	G66248094	COPRICARDANO SP	UNIVERSAL JOINT COVER SP	COUVRE-CARDAN SP	KARDANABDECKUNG SP	CUBRECARDæN SP
4	G66349008	BOCCOLA	BUSHING	BOITE	BsCHSE	CASQUILLO
5	G22230035	COPERCHIO SCATOLA INGRAN.	GEARWHEEL BOX COVER	COUVERCLE BOITE ENGRENAGE	DECKEL ZAHNRZDERGEHZUSE	TAPA CAJA ENGRAN.
6	G22230040	SELETTORE MOBILE COMPLETO	MOBILE SELECTOR ASSY.	SELECTEUR MOBILE COMPL.	KOMPL. BEWEGLICHER WZHLER	SELECTOR MVIL COMPLETO S
7	G22230041	SELETTORE FISSO	SELECTOR FIXED	SELECTEUR FIXE	FESTER WZHLER	SELECTOR FIJO
8	G13822430	COPERCHIO MAGGIORATO				
9	G22230037	TENUTA GUARNIZIONE	SEAL	BLOQUAGE GARNITURE	DICHTUNG	JUNTA ESTANCA
10	G16620470	TAPPO CENTRALE H=7,5	CENTRAL PLUG H=7.5	BOUCHON CENTRAL H=7,5	ZENTRALER PFROPFEN H=7,5	TAPËN CENTRAL H=7,5
11	G22230039	PERNO COPERCHIO	COVER PIN	PIVOT COUVERCLE	DECKELZAPFEN	PERNO TAPA
12	G66349002	BOCCOLA SINT.BASSOFONDO	BUSHING- SINTERED	BOITE FRITTEE	SYNTH. B_CHSE	CASQUILLO SINT.
13	G22270071	BOCCOLA COLL.SINTER.20X24	20X24 SINTERED COLLARED BUSH	BOITE COLLIER FRITTEE 20X24	ANSCHLUSSBUECHSE SINTER.20X24	CASQUILLO CONEX. SINTER.20X24
14	G22270204	PIASTRA ANTI TRABOCC.SEMI SP	SEED ANTI-OVERFLOW PLATE SP	PLAQUE ANTI-DEBORD.T GRAINES S	SAMENsBERLAUFPLATTE SP	PLACA ANTI DESBORDAMIENTO SEMI
15	G15421141	ASSE PORTA PIGNONE COMPL.	COMPL. PINION HOLDER SPINDLE	AXE PORTE PIGNON COMPL.	RITZELTRZGERACHSE KOMPLETT	EJE PORTAPI¾N COMPLETO A
16	G15421151	FERMO MOLLA FALCIONE	CUTTER SPRING STOP	ARRET RESSORT HACHOIR	FESTSTELLVOR. FEDER FUTTERSCHN	BLOQUEO MUELLE GUADA¾ADORA
17	G16620120	CORPO DI DISTRIBUZIONE SP540	DISTRIBUTION ASSEMBLY SP540	CORPS DE DISTRIBUTION SP540	STREUBEH-LTER SP540	CUERPO DISTRIBUCIËN SP540
18	G22220073	RONDELLA 28X0,3X16,5	WASHER 28X0-3X16-5	RONDELLE 28X0-3X16-5	UNTERLEGSCHEIBE 28X0-3X16-5	ARANDELA 28X0-3X16-5
19	F01420037	ROS.M6 6,4X 24X 2 U6593 ZN				
20	G18902951	MOLLA SPEC.ZN SCARICO	SPEC SPRING ZN DISCHARGE	RESSORT TRAPPE VIDANGE	SPEZIALFEDER ZN ENTLADUNG	MUELLE ESPEC. ZN DESCARGA
21	G18903180	MOLLA CONVOGLIATORE MICRO	MICRO CONVEYOR SPRING	RESSORT CONVOYEUR MICRO	FEDER MIKRO FTRDERER	MUELLE CONDUCTOR MICRO
22	G66248068	GUARNIZIONE COPERCH.DISTR. SP	DISTRIB. COVER GASKET. SP	JOINT ETANCH PORTE SP520/540	DICHTUNG SZAPPARATDECKEL SP	JUNTA TAPA DISTR. SP
23	G66248219	ANELLO PARAPOLVERE SP-520	DUST COVER RING	BAGUE PARE-POUSSIERE SP-520	STAUBSCHUTZRING SP-520	ANILLO GUARDAPOLVO SP-520
24	G16620540	PORTA DI PROTEZIONE	SAFETY HATCH	PORTE DE PROTECTION	SCHUTZÍFFNUNG	PUERTA DE PROTECCIËN
25	G16620530	PORTA DI CONTROLLO	INSPECTION DOOR	PORTE CONTROLE	KONTROLLTsR	PUERTA DE CONTROL
26	F01020403	VITE M 6X 1X 16 U5739 8.8 ZN	BOLT M 6X16	VIS M 6X16	SCHRAUBE M 6X16	TORNILLO M 6X16
27	F01020382	VITE M 5X0,8X 25 U5739 8.8 ZN	BOLT 5 X25 5739 8.G GALVANIZ.	VIS 5 X25 5739 8.G ZN	SCHRAUBE 5 X25 5739 8.G ZN	TORNILLO 5 X25 5739 8.G ZN
28	F01020432	VITE M 8X1,25X16 U5739 8.8 ZN	BOLT M 8X16	VIS M 8X16	SCHRAUBE M 8X16	TORNILLO M 8X16
29	F01020451	VITE M 8X1,25X45 U5739 8.8 ZN	BOLT M 8X45	VIS M 8X45	SCHRAUBE M 8X45	TORNILLO M 8X45
30	F01070011	VIT.A.4,2X1,41X 9,5 6950 4.8NI	BOLT- SELF-TAPPING 4-2X9-5T.E.	VIS AUTOTAR. 4-2X9-5 T. E. COU	SELBSTSCHNEID. SCHRAUBE 4-2X9-	TORNILLO AUTORROSC. 4-2X9-5
31	F01240024	DADO M 8X1,25 U5448 5.8 ZN	NUT 8 UNI 5448 5.8 ZN	ECROU 8 UNI 5448 5.8 ZN	MUTTER 8 UNI 5448 5.8 ZN	TUERCA 8 UNI 5448 5.8 ZN
32	F01230019	DADO M 5X 0,8 D982 8 ZN	NORM.SELF-LOCKING NUT 5 GALVAN	ECROU AUTOB.NOR.5 ZN	SELBSTSP. MUTTER NOR.5 ZN	TUERCA AUTOB. NOR. 5 ZN
33	F01200244	DADO M 8X1,25 U5588 6.8 ZN	NUT M8	ECROU M8	MUTTER M8	DADO M8
34	F01410023	ROS.M5 5,3X 10X 1 U6592 ZN	WASHER D5 UNI 6592 ZN	RONDELLE D5 UNI 6592 ZN	UNTERLEGSCHEIBE D5 UNI 6592 ZN	ARANDELA D5 UNI 6592 ZN
35	F01410051	ROS.M8 8,4X 17X1,6 U6592 ZN	PLANE WASHER D.8	RONDELLE D.8	SCHEIBE D.8	ARANDELA D.8
36	F01430059	ROS.M8 8,4X 15X0,8 U8842J ZN	WASHER D8 DIN 6798 D.INT.ZN	RONDELLE D8 DIN 6798 D. INT. Z	UNT. SCHEIBE D8 DIN 6798 D. IN	ARANDELA D8 DIN 6798 D.INT.ZN
37	F01460115	ROS.OND. 8,4X 15X0,5 BR D137A	WASHER D8 DIN 137/A	RONDELLE D8 DIN 137/A	UNTERLEGSCHEIBE D8 DIN 137/A	ARANDELA D8 DIN 137/A
38	F02200137	COPIGLIA 2X 15 U1336 ZN	SPLIT PIN 2 X15 1336 GALVAN.	GOUPILLE 2 X15 1336 ZN	SPLINT 2 X15 1336 ZN	PASADOR 2 X15 1336 ZN
39	F02100079	SPINA E.P. 5X 16 U6873 C70 BR				
40	F02100083	SPINA E.P. 5X 24 U6873 C70 BR	PIN EL. 5 X24 DIN 1481	FICHE EL. 5 X24 DIN 1481	SPANNSTIFT 5 X24 DIN 1481	CLAVIJA EL.5 X24 DIN 1481
41	F02150012	LINGUETTA 5X 5X 10 U6604A	TAB 05X5X10 UNI6604	LANGUETTE 05X5X10 UNI6604	FEDERKEIL 05X5X10 UNI6604	LENGsETA 05X5X10 UNI6604
42	F02200200	COPIGLIA 4X 70 U1336 ZN	SPLIT PIN 4 X70 1336 GALVAN.	GOUPILLE 4 X70 1336 ZN	SPLINT 4 X70 1336 ZN	PASADOR 4 X70 1336 ZN
43	G15421870	PORTA DI SCARICO DISTRIBUTORE	DISTRIBUTOR DISCHARGE DOOR	PORTE DE DECHARGEMENT DISTRIB,	ENTLADUNGSTsR SZAPPARAT	PUERTA DESCARGA DISTRIBUIDOR
44	G16620101	CORPO DISTRIBUTORE COMPL.SP540	COMPL. DISTRIBUTOR BODY SP540	CORPS DISTRIBUTEUR COMPL.SP540	STREUERKÍRPER, KOMPL.SP540	CUERPO DISTRIBUIDOR COMPL.SP54
45	G19002750	COPERCHIO SERBATOIO SEME 530	SEED TANK COVER 530	COUVERCLE RES GRAINES 530-MT	SAMENBEHZLTERDECKEL 530	TAPA DEPSITO SEMILLA 530 A
46	F01220011	DADO M 6X 1 D980 8 ZN	SELF LOCKING NUT M6	ECROU AUTOBL. M6	SELBSTSPERR.MUTTER M6	DADO AUTOBL. M6
47	F01020403	VITE M 6X 1X 16 U5739 8.8 ZN	BOLT M 6X16	VIS M 6X16	SCHRAUBE M 6X16	TORNILLO M 6X16
48	F01200232	DADO M 6X 1 U5588 6.8 ZN				
49	G15421830	INNESTO	COUPLING	ACCOUPLEMENT	KUPPLUNG	ACOPLAMIENTO
50	F01200220	DADO M 5X 0,8 U5588 6.8 ZN	NUT 5 UNI 5588 6.8 GALVANIZED	ECROU 5 UNI 5588 6.8 ZN	MUTTER 5 UNI 5588 6.8 ZN	TUERCA 5 UNI 5588 6.8 ZN
51	F01430035	ROS.M5 5,3X 10X0,6 U8842J ZN	WASHER D5 DIN 6798 D.INT.ZN	RONDELLE D5 DIN 6798 D. INT. Z	UNT. SCHEIBE D5 DIN 6798 D. IN	ARANDELA D5 DIN 6798 D.INT.ZN
52	G16620010	ESPULSORE SEMI BIETOLA	SUGAR BEET EJECTOR	EXPULSEUR BETTES	AUSWERFER RÜBEN	EXPULSOR REMOLACHA
53	F01020381	VITE M5X 0,8X 20 U5739 A2 IX	BOLT 5X20 5739	VIS 5X20 5739	SCHRAUBE 5X20 5739	TORNILLO 5X20 5739
54	G22270133	PIASTRINA ANTI TRABOC.SEMI MIN	MINUTE SEED PLATE SP	PLAQUETTE GRAINES PETITES SP	PLZTTCHEN KLEINE SAMEN SP	PLAQUETA SEMILLAS PEQUE¾AS SP
55	G16620360	DIMA SELETTORE FISSO	POSITION PLATE FOR FIXED SELEC	GABARIT POSITION SELECTEUR FIX	EINSTELLEHRE F_R FIXEN ABSTREI	PLACA PARA LA POSICIËN SELECTO
56	G15422241	SERBATOIO SEME COMPLETO SP	SEED TANK ASSY.	RESERVOIR GRAINES COMP PLA SP	SAMENBEHZLTER KOMPLETT	DEPSITO SEMILLAS COMPLETO B
57	G16620450	COPERCHIO MAGGIORATO SEMI MIN.	INCREASED SEED DISTRIB. COVER	COUVERC. MAJOR.DISTRIB. GRAINE	_BERBEM. DECKEL SAMENSZAPPARAT	TAPA SOBREDIMENS. DISTRIB. SEM
58	G18701890	RONDELLA D.8,5 SVASATA ZN.	FLARED WASHER D.8.5 ZN.	RONDELLE D.8,5 +VAS+E ZN.	F-CHERSCHEIBE D.8,5 ZN.	ARANDELA Ï 8,5 ABOCINADA ZN.
59	F01030055	VITE M 8X1,25X20 U5933 10.9 ZD	BOLT M 8X20	VIS M 8X20	SCHRAUBE M 8X20	TORNILLO M 8X20
60	G13822440	COPERCHIO MAGGIOR.D45 COMPLETO	ASSY.INCREASED COVER	COUVERC. MAJOR.COMPL.	sBERBEM. DECKEL KOMPLETT	TAPA SOBREDIMENS. COMPLETO
61	G16620460	COPERCHIO SEMI MINUTI COMPL.	COMPL. MINUTE SEED COVER	COUVERCLE GRAINES PETITES COMP	DECKEL KLEINSAMEN KOMPL.	TAPA SEMILLAS PEQUEðAS COMPL
62	G22270128	SELETTORE MOBILE ARACHIDI SP	MOBILE SELECTOR- PEANUTS SP	SELECTEUR MOBILE ARACHIDES SP	BEWEGLICHER WZHLER ERDNsSSE SP	SELECTOR MVIL CACAHUETES. S
63	G15422520	CORPO DISTRIBUTORE ARACHIDI SP	PEANUT DISTRIBUTION CASING	CORPS DE DISTRIBUTION ARACHIDE	VERTEILUNGSKTRPER ERDNsSSE	CUERPO DE DISTRIBUC.CACAHUETES
64	G22270132	FINESTRELLA CONTR.ARACHIDI SP	PEANUT CONTRA. WINDOW SP	FENETRE CONTR. ARACHIDES SP	LUKE ERDNUSSKONTROLLE SP	VENTANILLA CONTR. CACAHUETES.
65	G22230033	PORTA CONTROLLO SEME	SEED INSPECTION DOOR	PORTE CONTROLE GRAINES	KONTROLLTsR SAMEN	PUERTA DE CONTROL SEMILLAS
66	G22270095	GRIGLIA PROTEZIONE SP	PROTECT. GRID SP	GRILLE PROTECTION SP	SCHUTZGITTER SP	REJILLA PROTECCIN SP G
67	G22270130	PIASTRINA ANTI TRABOC.ARACHIDI	PEANUT CLOSING PLATE	PLAQUETTE FERMETURE ARACH. SP	ABSCHLUSSPLZTTCHEN ERDNsSSE SP	PLAQUETA CIERRE CACAHUETES SP
68	G18904240	MOLLA APERTURA PORTA CONTROLLO	SPRING	RESSORT	FEDER	MUELLE
69	G19005100	TUBO D.63X3X280 NERO	PIPE D.63X3X280	TUBE D.63X3X280	ROHR D.63X3X280	TUBO D.63X3X280
70	F01020404	VITE M 6X 1X20 U5739 8.8 ZN	BOLT 6X20 5739 8.G GALVANIZED	VIS 6X20 5739 8.G ZN	SCHRAUBE 6X20 5739 8.G ZN	TORNILLO 6X20 5739 8.G ZN
71	F01420036	ROS.M6 6,4X 18X 2 U6593 ZN	FLAT WASHER 6-6X 18X2 6593 ZN	ROND. PLATE 6-6X 18X2 6593 ZN	SCHEIBE 6-6X 18X2 6593 ZN	ARAND. PLANA 6-6X 18X2 6593 ZN
72	G16620061	CORPO DISTRIBUZIONE BIETOLE	BEET DISTRIBUTION ASSEMBLY	CORPS DISTRIBUTION BETTERAVES	STREUBEH-LTER R_BEN	CUERPO DISTRIBUCIËN REMOLACHAS

TAV. 260

Codice *Code* Code *Kodex* Codigo	Nr e fori *Nr and ł holes* Nr et trous *Nr und ł l□cher* Nr y agujeros		Coltura	*Seeds*	Cultures	*Samen*	Semillas	Distanza semina Seeding dist. Dist. de semis Saatabstandes Dist. siembra
22230298	20	0,8 **(1)**						
22230319	20	1 **(1)**	Cavolo broccolo	*Broccoli*	Chou-Broccoli	*Brokkoli*	Br culi	
22230327	20	1,1 **(1)**	Cavolo verza	*Cabbage,Savoy*	Chou de Milan	*Wirsing*	Col de Mil n	
22230320	20	1,5						
22230294	20	2,1	Zucchino Melone Anguria Cardo	*Squash* *Melon* *Watermelon* -	Courgette Melon PastËque -	*K□rbis* *Melone* *Wassermelone* -	Calabac n Mel n Sand a -	**min.10,4 cm.**
22230203	20	2,5	Girasole	*Sunflower*	Tournesol	*Sonnenblumen*	Girasol	
22230192	20	3,5	Cotone Mais (Piccolo)	*Cotton* *Corn (Little)*	- Mais (Petit)	*Baumwohl* *Mais (Klein)*	- Maiz (Peque o)	**max. 41,7 cm.**
22230048	20	4,5	Mais	*Corn*	Mais	*Mais*	Maiz	
22230047	20	5,5	Mais (Grosso) Ceci Fagiolo borlotto e cannellino Arachidi	*Corn (Big)* *Pulses* *Beans* *Peanut*	Mais (Gros) - Haricot -	*Mais (Grosse)* - *Bohnen* -	Maiz (Grueso) - Poroto -	
22230205	20	7	Arachidi Lupino	*Peanut* -	- -	- -	- -	
10124030R	26	1 **(1)**						
22230253	26	1,5						
22230296	26	2,1	Zucchino Melone Anguria Cardo	*Squash* *Melon* *Watermelon* -	Courgette Melon PastËque -	*K□rbis* *Melone* *Wassermelone* -	Calabac n Mel n Sand a -	**min. 8 cm.**
22230289	26	2,5	Girasole	*Sunflower*	Tournesol	*Sonnenblumen*	Girasol	
22230249	26	3,5	Cotone Mais (Piccolo)	*Cotton* *Corn (Little)*	- Mais (Petit)	*Baumwohl* *Mais (Klein)*	- Maiz (Peque o)	
22230050	26	4,5	Mais	*Corn*	Mais	*Mais*	Maiz	**max. 32,1 cm.**
22230303	26	5						
22230049	26	5,5	Mais (Grosso) Ceci Fagiolo borlotto e cannellino Arachidi	*Corn (Big)* - *Beans* -	Mais (Gros) - Haricot -	*Mais (Grosse)* - *Bohnen* -	Maiz (Grueso) - Poroto -	
22230317	36	1,1 **(1)**	Pomodoro	*Tomato*	Tomate	*Tomate*	Tomate	
22230196	36	1,5	Lenticchia Cetriolo Pomodoro conf. 2,5 3,5 mm	- *Cucumber* *Tomato pilled* *ł 2,5□3,5 mm*	- Concombre Tomate enrobË 2,5 3,5 mm	- *Gurke* *Tomate pilliert* *ł 2,5□3,5 mm*	- Pepino Tomate conf. 2,5 3,5 mm	
22230051	36	2,1	Barbabietola Zucchino Melone Anguria Cardo Sorgo Sesamo	*Beets* *Squash* *Melon* *Watermelon* - *Sorghum* -	Betteraves Courgette Melon PastËque - Sorgo -	*R□ben* *K□rbis* *Melone* *Wassermelone* - *Hirse* -	Remolacha Calabac n Mel n Sand a - Sorgo -	**min. 5,8 cm.**

Codice *Code* Code *Kodex* Codigo	Nr e fori *Nr and ł holes* Nr et trous *Nr und ł l□cher* Nr y agujeros		Coltura	*Seeds*	Cultures	*Samen*	Semillas	Distanza semina Seeding dist. Dist. de semis Saatabstandes Dist. siembra
22230290	36	2,5	Pomodoro conf. 3,5 4,5 mm Ginseng	*Tomato pilled* *ł 3,5□4,5 mm* *Ginseng*	Tomate enrobË 3,5 4,5 mm Ginseng	*Tomate pilliert* *ł 3,5□4,5 mm* *Ginseng*	Tomate conf. 3,5 4,5 mm Ginseng	**max. 23,2 cm.**
22230197	36	3,5	Fagiolino Piselli Soia	*Beans (Little)* *Peas* *Soyabeans*	Haricot (Petit) Pois Soja	*Gr□ne Bohnen* *Erbsen* *Soja*	Judias verdes Arveja Soja	
22230199	36	4,5	Fagiolo Piselli Favino	*Beans* *Peas* -	Haricot Pois -	*Bohnen* *Erbsen* -	Poroto Arveja -	
22230295	36	5,5	Fagiolo	*Beans*	Haricot	*Bohnen*	Poroto	
10123760R	36	5,5 **(2)**	Fagiolo	*Beans*	Haricot	*Bohnen*	Poroto	
22230304	36	7						
22230321	52	1,5						**min. 4 cm.**
22230328	52	2,1	Barbabietola	*Beets*	Betteraves	*R□ben*	Remolacha	
22230299	52	2,5						
22230316	52	3,5	Fagiolino	*Beans (Little)*	Haricot (Petit)	*Gr□ne Bohnen*	Judias verdes	
22230288	52	4,25	Soia	*Soyabeans*	Soja	*Soja*	Soja	**max. 16 cm.**
22230194	72	0,5 **(1)**	Endivia Lattuga	*Endive* *Lettuce*	ChicorËe Laitue	*Winterendivien* *Kopfsalat*	Escarola Lechuga	
22230195	72	0,8 **(1)**	Endivia Lattuga Rapa Senape Finocchio Anice	*Endive* *Lettuce* *Turnip* *Mustard* *Fennel* -	ChicorËe Laitue Navet Moutarde Fenouil -	*Winterendivien* *Kopfsalat* *Speiser□ben* *Senft* *Fenchel* -	Escarola Lechuga Nabo - Hinojo -	
22230193	72	1,1 **(1)**	Pomodoro Rapa Finocchio Colza Panico	*Tomato* *Turnip* *Fennel* *Canola* -	Tomate Navet Fenouil Colza -	*Tomate* *Speiser□ben* *Fenchel* *Raps* -	Tomate Nabo Hinojo Colza -	**min. 2,9 cm.**
22230257	72	1,5	Spinacio Ravanello Asparagio Pomodoro conf. 2,5 3,5 mm	*Spinach* *Radish* *Asparagus* *Tomato pilled* *ł 2,5□3,5 mm*	Epinard Radis Asperge Tomate enrobË 2,5 3,5 mm	*Spinat* *Radies* *Spargel* *Tomate pilliert* *ł 2,5□3,5 mm*	Espinaca Rabanito Esp rrago Tomate conf. 2,5 3,5 mm	**max. 11,6 cm.**
22230213	72	2,1	Bieta a coste Saggina	*Swiss Chard* -	PoirËe -	*Mangold* -	Acelga -	
10124040R	72	2,5						
22230198	72	3,5	Fagiolino Soia	*Beans (Little)* *Soyabeans*	Haricot (Petit) Soja	*Gr□ne Bohnen* *Soja*	Judias verdes Soja	
10124020R	72	4,25	Soia	*Soyabeans*	Soja	*Soja*	Soja	
22230256	72	4,5						

DISCHI DI SEMINA

TAV. 260

Pos.	Cod.	Descrizione	Description	Description	Benennung	Descripcion
1	G10121460	DISCO 96 FORI D 1,0 SP	DISK 96 HOLES D.1,0 SP	DISQUE 96 TROUS D. 1,0 SP	SCHEIBE 96 LTCHER D.1,0 SP	DISCO 96 ORIFICIOS D. 1,0 SP
2	G10123970	DISCO 102 F.D.2 SP	DISK 102 HOLES D. 2 SP	DISQUE 102 TROUS D. 2 SP	SCHEIBE 102 LTCHER D.2 SP	DISCO 102 ORIFICIOS D. 2 SP
3	G10124010	DISCO 60 FORI D.4,5 SP LM	DISK 60 HOLES D.4-5 SP LM	DISQUE 60 TROUS D. 4-5 SP LM	SCHEIBE 60 LTCHER D.4-5 SP LM	DISCO 60 ORIFICIOS D.4-5 SP LM
4	G10124020	DISCO 72 FORI D.4,25 SP LM	DISK 72 HOLES D.4-25 SP LM	DISQUE 72 TROUS D. 4-25 SP LM	SCHEIBE 72 LTCHER D.4-25 SP	DISCO 72 ORIFICIOS D.4-5 SP LM
5	G10124030	DISCO ACC. 26 FORI D 1,0 SP	STEEL DISK 26 HOLES D 1.0 SP	DISQUE ACC. 26 TROUS D 1-0 SP	SCHEIBE ZUB. 26 LTCHER D 1-0 S	DISCO AC. 26 ORIFICIOS D 1-0 S
6	G10124040	DISCO ACC. 72 FORI D 2,5 SP	DISK ST. 72 H. D 2,5	DISQUE ACIER 72 TROUS D 2,5	STAHLSCHEIBE 72 L. D 2,5	DISCO ACERO 72 ORIF. D 2,5
7	G10124050	DISCO ACC.104 FORI D 1,1 SP	STEEL DISC 104 HOLES D 1.1 SP	DISQUE ACIER 104 TROUS D 1,1	STAHLSCHEIBE 104 BOHR. D 1,1	DISCO ACC.104 AGUJEROS D 1,1
8	G10124060	DISCO 26 F. D.4	DISC 26 F. D.4	DISQUE 26 TROUS D.4	SCHEIBE 26 B. D.4	DISCO 26 AGUJEROS ï 4
9	G10124070	DISCO 36 FORI D 1,7 SP LM	DISK 36 HOLES D.1.7 SP LM	DISQUE 36 TROUS D.1,7 SP LM	SCHEIBE 36 LTCHER D.1,7 SP LM	DISCO 36 ORIFICIOS D.1,7 SP LM
10	G10124090	DISCO 6 FORI D.4,5	DISK 6 HOLES D.4,5	DISQUE 6 TROUS D. 4,5	SCHEIBE 6 LTCHER D.4,5	DISCO 6 ORIFICIOS D.4,5
11	G10124100	DISCO 6 FORI D.3,0	DISK 6 HOLES D.3,0	DISQUE 6 TROUS D. 3,0	SCHEIBE 6 LTCHER D.3,0	DISCO 6 ORIFICIOS D.3,0
12	G22230047	DISCO 20 F. D.5,5 SP LM	DISK 20 H. D.5-5 CORN SP LM	DISQUE 20 TROUS D. 5-5 MAIS SP	SCHEIBE 20 L. D.5-5 MAIS SP LM	DISCO 20 ORIF. D.5-5 MAZ SP LD
13	G22230048	DISCO 20 F. D.4,5 SP LM	DISK 20 H. D.4-5 SUNF..SP LM	DISQUE 20 TROUS D. 4-5 TOURN.	SCHEIBE 20 L. D.4-5 SONNENBLU.	DISCO 20 ORIF. D.4-5 GIRA.SP L
14	G22230049	DISCO 26 F. D.5,5 SP LM	DISK 26 H. D.5-5 CORN SP LM	DISQUE 26 TROUS D. 5-5 MAIS SP	SCHEIBE 26 L. D.5-5 MAIS SP LM	DISCO 26 ORIF. D.5-5 MAZ SP LD
15	G22230050	DISCO 26 F. D.4,5 SP LM	DISK 26 H. D.4-5 CORN SP LM	DISQUE 26 TROUS D. 4-5 MAIS	SCHEIBE 26 L. D.4-5 MAIS	DISCO 26 ORIF. D.4-5 MAIZ SP L
16	G22230051	DISCO 36 F. D.2,1 SP LM	DISK 36 H. D.2-1 BEET.SP LM	DISQUE 36 TROUS D. 2-1 BETTES	SCHEIBE 36 L.R. D.2-1 RsBEN SP	DISCO 36 ORIF. D.2-1 REMOLACHA
17	G22230192	DISCO 20 FORI D.3,5 SP LM	DISK 20 HOLES D.3-5 SP LM	DISQUE 20 TROUS D. 3-5 SP LM	SCHEIBE 20 LTCHER D.3-5 SP LM	DISCO 20 ORIFICIOS D.3-5 SP LM
18	G22230193	DISCO 72 FORI D.1,1 SP LM	DISK 72 HOLES D.1-1 SP LM	DISQUE 72 TROUS D. 1-1 SP LM	SCHEIBE 72 LTCHER D.1-1 SP LM	DISCO 72 ORIFICIOS D.1-1 SP LM
19	G22230194	DISCO 72 FORI D.0,5 SP LM	DISK 72 HOLES D.0-5 SP LM	DISQUE 72 TROUS D. 0-5 SP LM	SCHEIBE 72 LTCHER D.0-5 SP LM	DISCO 72 ORIFICIOS D.0-5 SP LM
20	G22230195	DISCO 72 FORI D.0,8 SP LM	DISK 72 HOLES D.0-8 SP LM	DISQUE 72 TROUS D. 0-8 SP LM	SCHEIBE 72 LTCHER D.0-8 SP LM	DISCO 72 ORIFICIOS D.0-8 SP LM
21	G22230196	DISCO 36 FORI D.1,5 SP LM	DISK 36 HOLES D.1-5 SP LM	DISQUE 36 TROUS D. 1-5 SP LM	SCHEIBE 36 LTCHER D.1-5 SP LM	DISCO 36 ORIFICIOS D.1-5 SP LM
22	G22230197	DISCO 36 FORI D.3,5 SP LM	DISK 36 HOLES D.3-5 SP LM	DISQUE 36 TROUS D. 3-5 SP LM	SCHEIBE 36 LTCHER D.3-5 SP LM	DISCO 36 ORIFICIOS D.3-5 SP LM
23	G22230198	DISCO 72 FORI D.3,5 SP LM	DISK 72 HOLES D.3-5 SP LM	DISQUE 72 TROUS D. 3-5 SP LM	SCHEIBE 72 LTCHER D.3-5 SP LM	DISCO 72 ORIFICIOS D.3-5 SP LM
24	G22230199	DISCO 36 FORI D.4,5 SP LM	DISK 36 HOLES D.4-5 SP LM	DISQUE 36 TROUS D. 4-5 SP LM	SCHEIBE 36 LTCHER D.4-5 SP LM	DISCO 36 ORIFICIOS D.4-5 SP LM
25	G22230203	DISCO 20 F0RI D.2,5 SP LM	DISK 20 HOLES D.2-5 SP LM	DISQUE 20 TROUS D. 2-5 SP LM	SCHEIBE 20 LÖCHER D.2-5 SP LM	DISCO 20 ORIF. D.2-5 SP LM
26	G22230205	DISCO 20 F. D.7,0 ARAC.SP LM	DISK 20 H. D.7-0 PEAN..SP LM	DISQUE 20 TROUS D. 7-0 ARACHID	SCHEIBE 20 L. D.7-0 ERDNUSS SP	DISCO 20 ORIF. D.7-0 CACAH. SP
27	G22230213	DISCO 72 FORI D.2,1 SP LM	DISK 72 HOLES D.2-1 SP LM	DISQUE 72 TROUS D. 2-1 SP LM	SCHEIBE 72 LTCHER D.2-1 SP LM	DISCO 72 ORIFICIOS D.2-1 SP LM
28	G22230216	DISCO 144 FORI D.1,1 SP LM	DISK 144 HOLES D.1-1 SP LM	DISQUE 144 TROUS D. 1-1 SP LM	SCHEIBE 144 LTCHER D.1-1 SP LM	DISCO 144 ORIFICIOS D.1-1 SP L
29	G22230217	DISCO 36 FORI D.5,5 SP LM	DISK 36 HOLES D.5-5 SP LM	DISQUE 36 TROUS D. 5-5 SP LM	SCHEIBE 36 LTCHER D.5-5 SP LM	DISCO 36 ORIFICIOS D.5-5 SP LM
30	G22230249	DISCO 26 FORI D 3,5 SP LM	DISK 26 HOLES D 3-5 SP LM	DISQUE 26 TROUS D 3-5 SP LM	SCHEIBE 26 LTCHER D 3-5 SP LM	DISCO 26 ORIFICIOS D 3-5 SP LM
31	G22230250	DISCO 144 FORI D.2,1 SP LM	DISK 144 HOLES D.2-1 SP LM	DISQUE 144 TROUS D. 2-1 SP LM	SCHEIBE 144 LTCHER D.2-1 SP LM	DISCO 144 ORIFICIOS D.2-1 SP L
32	G22230253	DISCO 26 FORI D.1,5 SP LM	DISK 26 HOLES D.1-5 SP LM	DISQUE 26 TROUS D. 1-5 SP LM	SCHEIBE 26 LTCHER D.1-5 SP LM	DISCO 26 ORIFICIOS D.1-5 SP LM
33	G22230256	DISCO 72 FORI D.4,5 SP LM	DISK 72 HOLES D.4-5 SP LM	DISQUE 72 TROUS D. 4-5 SP LM	SCHEIBE 72 LTCHER D.4-5 SP LM	DISCO 72 ORIFICIOS D.4-5 SP LM
34	G22230257	DISCO 72 FORI D.1,5 SP LM	DISK 72 HOLES D.1-5 SP LM	DISQUE 72 TROUS D. 1-5 SP LM	SCHEIBE 72 LTCHER D.1-5 SP LM	DISCO 72 ORIFICIOS D.1-5 SP LM
35	G22230287	DISCO 144 FORI D.1,5 SP LM	DISK 144 HOLES D.1-5 SP LM	DISQUE 144 TROUS D. 1-5 SP LM	SCHEIBE 144 LTCHER D.1-5 SP LM	DISCO 144 ORIFICIOS D.1-5 SP L
36	G22230288	DISCO 52 FORI D.4,25 SP LM	DISK 52 HOLES D.4-25 SP LM	DISQUE 52 TROUS D. 4-25 SP LM	SCHEIBE 52 LTCHER D.4-25 SP LM	DISCO 52 ORIFICIOS D.4-25 SP L
37	G22230289	DISCO 26 FORI D.2,5 SP LM	DISK 26 HOLES D.2-5 SP LM	DISQUE 26 TROUS D. 2-5 SP LM	SCHEIBE 26 LTCHER D.2-5 SP LM	DISCO 26 ORIFICIOS D.2-5 SP LM
38	G22230290	DISCO 36 FORI D.2,5 SP LM	DISK 36 HOLES D.2-5 SP LM	DISQUE 36 TROUS D. 2-5 SP LM	SCHEIBE 36 LTCHER D.2-5 SP LM	DISCO 36 ORIFICIOS D.2-5 SP LM
39	G22230294	DISCO 20 FORI D.2,1 SP LM	DISK 20 HOLES D.2-1 SP LM	DISQUE 20 TROUS D. 2-1 SP LM	SCHEIBE 20 LTCHER D.2-1 SP LM	DISCO 20 ORIFICIOS D.2-1 SP LM
40	G22230296	DISCO 26 FORI D.2,1 SP LM	DISK 26 HOLES D.2-1 SP LM	DISQUE 26 TROUS D. 2-1 SP LM	SCHEIBE 26 LÖCHER D.2-1 SP LM	DISCO 26 ORIFICIOS D.2-1 SP LM
41	G22230297	DISCO 144 FORI D.0,8 SP LM	DISK 144 HOLES D.0-8 SP LM	DISQUE 144 TROUS D. 0-8 SP LM	SCHEIBE 144 LTCHER D.0-8 SP LM	DISCO 144 ORIFICIOS D.0-8 SP L
42	G22230298	DISCO 20 FORI D.0,8 SP LM	DISK 20 HOLES D.0-8 SP LM	DISQUE 20 TROUS D. 0-8 SP LM	SCHEIBE 20 LTCHER D.0-8 SP LM	DISCO 20 ORIFICIOS D.0-8 SP LM
43	G22230299	DISCO 52 FORI D.2,5 SP LM	DISK 52 HOLES D.2-5 SP LM	DISQUE 52 TROUS D. 2-5 SP LM	SCHEIBE 52 LTCHER D.2-5 SP LM	DISCO 52 ORIFICIOS D.2-5 SP LM
44	G22230300	DISCO POST.10G-3F-D2,1 SP LM	DISK POST.10G-3F-D2-1 SP LM	DISQUE ARRIERE 10G. 3 TROUS D2	HINTERSCHEIBE 10G-3L-D2-1 SP L	DISCO TRAS.10G. 3 ORIF. D2-1 S
45	G22230301	DISCO 144 FORI D.0,5 SP LM	DISK 144 HOLES D.0-5 SP LM	DISQUE 144 TROUS D. 0-5 SP LM	SCHEIBE 144 LTCHER D.0-5 SP LM	DISCO 144 ORIFICIOS D.0-5 SP L
46	G22230303	DISCO 26 FORI D.5,0 SP LM	DISK 26 HOLES D.5-0 SP LM	DISQUE 26 TROUS D. 5-0 SP LM	SCHEIBE 26 LTCHER D.5-0 SP LM	DISCO 26 ORIFICIOS D.5-0 SP LM
47	G22230304	DISCO 36 FORI D.7 LM	DISK 36 HOLES D.7 LM	DISQUE 36 TROUS D. 7 LM	SCHEIBE 36 LTCHER D.7 LM	DISCO 36 ORIFICIOS D.7 LM
48	G22230306	DISCO 12 FORI D.2,1 SP LM	DISK 12 HOLES D.2-1 SP LM	DISQUE 12 TROUS D. 2-1 SP LM	SCHEIBE 12 LTCHER D.2-1 SP LM	DISCO 12 ORIFICIOS D.2-1 SP LM
49	G22230316	DISCO 52 FORI D.3,5 SP LM	DISC 52 HOLES D.3-5 SP LM	DISQUE 52 TROUS D. 3-5 SP LM	SCHEIBE 52 LTCHER D.3-5 SP LM	DISCO 52 ORIFICIOS D.3-5 SP LM
50	G22230317	DISCO 36 FORI D.1,1 SP LM	DISK 36 HOLES D.1-1 SP LM	DISQUE 36 TROUS D. 1-1 SP LM	SCHEIBE 36 LTCHER D.1-1 SP LM	DISCO 36 ORIFICIOS D.1-1 SP LM
51	G22230318	DISCO 10 FORI D.1,5 SP LM	DISK 10 HOLES D.1-5 SP LM	DISQUE 10 TROUS D. 1-5 SP LM	SCHEIBE 10 LTCHER D.1-5 SP LM	DISCO 10 ORIFICIOS D.1-5 SP LM
52	G22230319	DISCO 20 FORI D.1,0 SP LM	DISK 20 HOLES D.1-0 SP LM	DISQUE 20 TROUS D. 1-0 SP LM	SCHEIBE 20 LTCHER D.1-0 SP LM	DISCO 20 ORIFICIOS D.1-0 SP LM
53	G22230320	DISCO 20 FORI D.1,5 SP LM	DISK 20 HOLES D.1-5 SP LM	DISQUE 20 TROUS D. 1-5 SP LM	SCHEIBE 20 LTCHER D.1-5 SP LM	DISCO 20 ORIFICIOS D.1-5 SP LM
54	G22230321	DISCO 52 FORI D.1,5 SP LM	DISK 52 HOLES D.1-5 SP LM	DISQUE 52 TROUS D. 1-5 SP LM	SCHEIBE 52 LTCHER D.1-5 SP LM	DISCO 52 ORIFICIOS D.1-5 SP LM
55	G22230322	DISCO 80 FORI D.1,5 SP LM	DISK 80 HOLES D.1-5 SP LM	DISQUE 80 TROUS D. 1-5 SP LM	SCHEIBE 80 LTCHER D.1-5 SP LM	DISCO 80 ORIFICIOS D.1-5 SP LM
56	G22230323	DISCO 100 FORI D.1,5 SP LM	DISK 100 HOLES D.1-5 SP LM	DISQUE 100 TROUS D. 1-5 SP LM	SCHEIBE 100 LTCHER D.1-5 SP LM	DISCO 100 ORIFICIOS D.1-5 SP L
57	G22230324	DISCO 120 FORI D.1,5 SP LM	DISK 120 HOLES D.1-5 SP LM	DISQUE 120 TROUS D. 1-5 SP LM	SCHEIBE 120 LTCHER D.1-5 SP LM	DISCO 120 ORIFICIOS D.1-5 SP L
58	G22230325	DISCO 160 FORI D.1,5 SP LM	DISK 160 HOLES D.1-5 SP LM	DISQUE 160 TROUS D. 1-5 SP LM	SCHEIBE 160 LTCHER D.1-5 SP LM	DISCO 160 ORIFICIOS D.1-5 SP L
59	G22230326	DISCO 180 FORI D.1,5 SP LM	DISK 180 HOLES D.1-5 SP LM	DISQUE 180 TROUS D. 1-5 SP LM	SCHEIBE 180 LTCHER D.1-5 SP LM	DISCO 180 ORIFICIOS D.1-5 SP L
60	G22230327	DISCO 20 FORI D.1,1 SP LM	DISK 20 HOLES D.1-1 SP LM	DISQUE 20 TROUS D. 1-1 SP LM	SCHEIBE 20 LTCHER D.1-1 SP LM	DISCO 20 ORIFICIOS D.1-1 SP LM
61	G22230328	DISCO 52 FORI D.2,1 SP LM	DISK 2 HOLES D.2-1 SP LM	DISQUE 52 TROUS D. 2-1 SP LM	SCHEIBE 52 LTCHER D.2-1 SP LM	DISCO 52 ORIFICIOS D.2-1 SP LM
62	G22230332	DISCO 13 FORI D.3,5 SP LM	DISK 13 HOLES D.3.5 SP LM	DISQUE 13 TROUS D.3-5 SP LM	SCHEIBE 13 LTCHER D.3-5 SP LM	DISCO 13 ORIFICIOS D.3-5 SP

TAV. 113

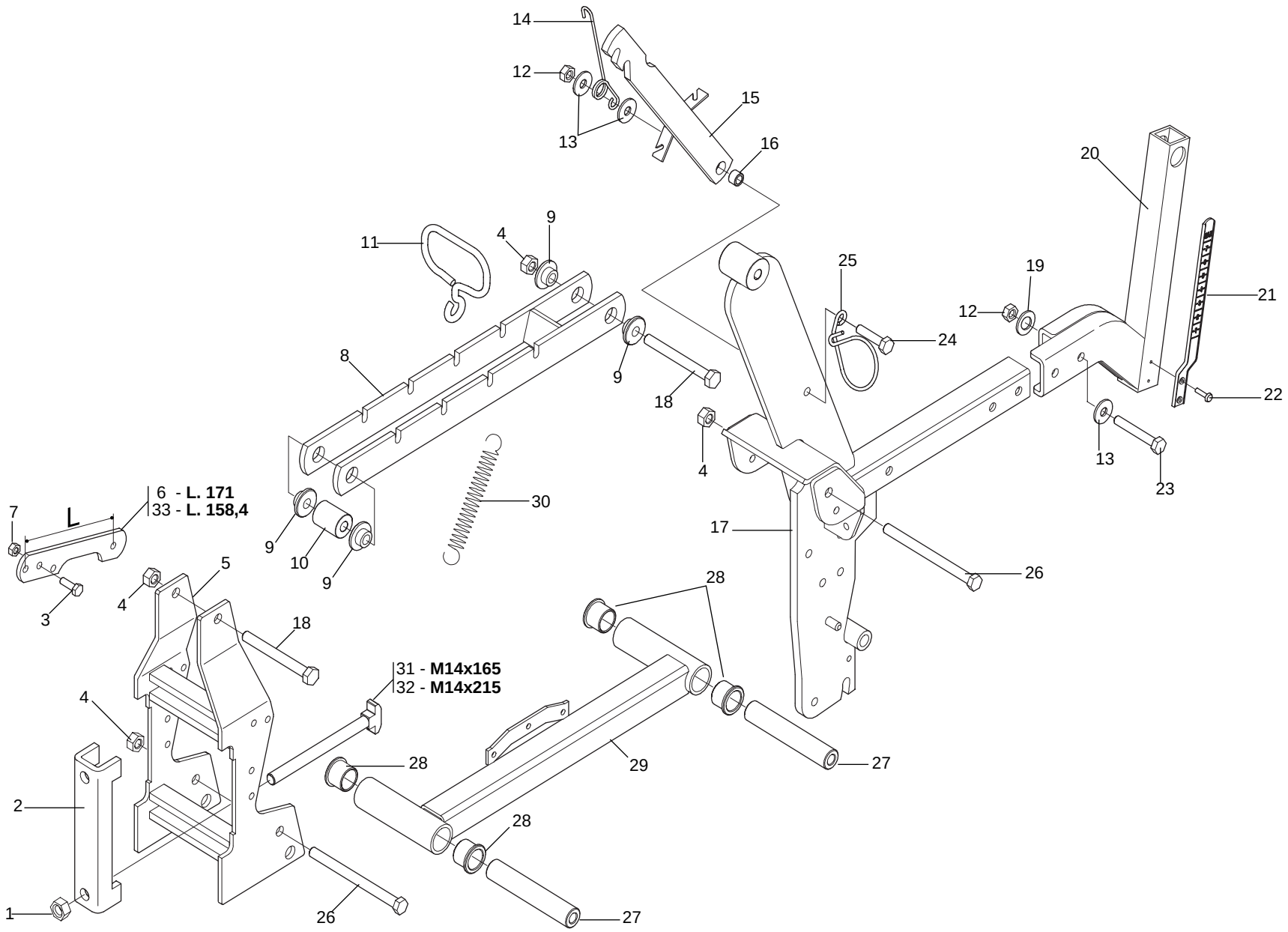

GASPARDO

TELAIO ELEMENTO

TAV. 113

Pos.	Cod.	Descrizione	Description	Description	Benennung	Descripcion
1	F01200306	DADO M14X 2 U5588 6.8 ZN	NUT M14X2	ECROU M14X2	MUTTER M14X2	DADO M14X2
2	G19204030	SCONTRO FISS.150 2F D15				
3	F01020440	VITE M 8X1,25X25 U5739 8.8 ZN	BOLT M8 X25 5739 8.8 ZN	VIS M8 X25 5739 8.8 ZN	SCHRAUBE M8 X25 5739 8.8 ZN	TORNILLO M8 X25 5739 8.8 ZN
4	F01220048	DADO M12X1,75 D980 8 ZN	SELF LOCKING NUT M12X1,75 980V	ECROU AUTOBL. M12X1,75 980-V	SIEHE 00553312	DADO AUTOBL. M12X1,75 980-V
5	G15421111	PIASTRA ATTACCO 150	COUPLING PLATE 150	PLAQUE ATTELAGE 150	KUPPLUNGSPLATTE 150	PLACA CONEXIN 150 P
6	G16620130	SUPPORTO SCATOLA RINVIO	SUPPORT BOITE DE RENVOI	GEARBOX SUPPORT	HALTERUNG VORGELEGEGEH-USE	SOPORTE CAJA TRANSMISI-N
7	F01220022	DADO M 8X1,25 D980 8 ZN	SELF LOCKING NUT M8X1,25 980V	ECROU AUTOBL. M8X1,25 980-V	SELBSTSP.MUTT. M8X1,25 980-V	DADO AUTOBL. M8X1,25 980-V
8	G15420102	PARALLELO SUPERIORE	UPPER PARALLEL	PARALL. SUP.	PARALLELOGRAMM OBEN	PARALELO SUPERIOR
9	G15421232	BOCCOLA BRACCIO PARALLELO SP.8	ARM BUSHING PARALLEL SP.8	BOITE BRAS PARALLELE SP.8	BsCHSE ARM PARALLEL SP.8	CASQUILLO BRAZO PARALELO SP.8
10	G18802170	BOCCOLA 12,25X30X40 ZN	BUSHING 12,25X30X40 ZN	BOITE 12,25X30X40 ZN	BsCHSE 12,25X30X40 ZN	CASQUILLO 12,25X30X40 ZN
11	G18903690	ATTACCO MOLLA	SPRING COUPLING	FIXATION RESSORT	KUPPLUNG FEDER	CONEXIN MUELLE O
12	F01200270	DADO M10X 1,5 U5588 6.8 ZN	NUT M10	ECROU M10	MUTTER M10	DADO M10
13	F01420060	ROS.M10 10,5X 30X2,5 U6593 ZN	WASHER 10,5X30	RONDELLE 10,5X30	SCHEIBE 10,5X30	ARANDELA 10,5X30
14	G18902880	MOLLA FERMO PARALLELO SP	PARALLEL STOP SPRING SP	RESSORT ARRET PARALLELE SP	FEDER FESTSTELLVORRICHT. PARAL	MUELLE BLOQUEO PARALELO SP
15	G16620160	FERMO PARALLELO	PARALLEL LOCK	ARRET PARALLELOGRAMME	FESTSTELLVORRICHTUNG PARALLELO	BLOQUEO PARALELO
16	G18801610	BOCCOLA 10,25X16 X11 ZN	BUSHING 10.25 X 16 X 11- GALVA	BOITE 10-25X16 X11 ZN	BsCHSE 10-25X16 X11 ZN	CASQUILLO 10-25X16 X11 ZN
17	G16620310	CORPO CENTRALE SP540	CENTRAL CASING SP540	CORPS CENTRALE SP540	MITTELKTRPER SP540	CUERPO CENTRAL SP540
18	F01020168	VITE M12X1,75X90 U5737 8.8 ZN	BOLT 12X90 5737 8.G GALVANIZED	VIS 12X90 5737 8.G ZN	SCHRAUBE 12X90 5737 8.G ZN	TORNILLO 12X90 5737 8.G ZN
19	F01430023	ROS.M10 10,5X 18X0,9 U8842J ZN	WASHER D10 DIN 6798 D.INT.ZN	RONDELLE D10 DIN 6798 D. INT.	UNT. SCHEIBE D10 DIN 6798 D.IN	ARANDELA D10 DIN 6798 D.INT.ZN
20	G16620550	SUPPORTO REGOLAZIONE	REGULATION SUPPORT	SUPPORT R+GLAGE	HALTERUNG EINSTELLUNG	SOPORTE REGULACIËN
21	G19003400	ASTA INDICAZIONE PROFONDITA'	DEPTH INDICATING ROD	TIGE INDICATION PROFONDEUR	TIEFENANZEIGESTAB	VARILLA INDICACIÓN PROFUNDIDAD
22	F02250077	RIVETTO STR. 3X 14 U9200A AL	3X14 ALUMINIUM PULL RIVET	RIVET A RUPTURE 3X14 ALUMINIUM	REISSNIETE3X14 ALL.	REMACHE DESGAR. 3X14 ALL.
23	F01020122	VITE 10X 1,5X 70 U5737 8.8 ZN	BOLT 10X 1,5X 70 U5737 8.8 ZB	VIS 10X 1,5X 70 U5737 8.8 ZB	SCHR.10X 1,5X 70 U5737 8.8 ZB	TORN.10X 1,5X 70 U5737 8.8 ZB
24	F01020112	VITE M10X 1,5X45 U5737 8.8 ZN	BOLT 10X45 5737 8.G GALVANIZED	VIS 10X45 5737 8.G ZN	SCHRAUBE 10X45 5737 8.G ZN	TORNILLO 10X45 5737 8.G ZN
25	G18903140	MOLLA GUIDATUBO	PIPE GUIDE SUPPORT	RESSORT GUIDE-TUBE	FEDER ROHRFsHRUNG	MUELLE GUA TUBOS A
26	F01020183	VITE 12X1,75X170 U5737 8.8 ZN	BOLT 12X170 5737 8.G GALVANIZ.	VIS 12X170 5737 8.G ZN	SCHRAUBE 12X170 5737 8.G ZN	TORNILLO 12X170 5737 8.G ZN
27	G22230057	MOZZO ANTERIORE	ANT. HUB	MOYEU AVANT	VORDERNABE	CUBO DELANTERO
28	G66349003	BOCCOLA SINT.	BUSHING- SINTERED	BOITE FRITTEE	SYNTH. BUECHSE	CASQUILLO SINT.
29	G15420122	BRACCIO INFERIORE	LOWER ARM	BRAS INFERIEUR	UNTERER ARM	BRAZO INFERIOR
30	G65337015	MOLLA TRAZ.ZN REGOL.ELEM. SP	TRACTION SPRING ZN REGUL. ELEM	RESSORT TRACT. ZN REGL. ELEMEN	ZUGFEDER ZN ELEMENTEINSTELLUNG	MUELLE TRAC. ZN REGUL.ELEM. SP
31	G16610010	VITE A MARTELLO M14X165	WINGED SCREW M14X165	VIS A TETE MARTEAU M14X165	ZWEIFLÜGEL- SCHRAUBEN M14X165	TORNILLO DE MARIPOSA M14X165
32	G16610020	VITE A MARTELLO M14X215	WINGED SCREW M14X215	VIS A TETE MARTEAU M14X215	ZWEIFLÜGEL- SCHRAUBEN M14X215	TORNILLO DE MARIPOSA M14X215
33	G15422091	SUPPORTO SCATOLA RINVIO	GEARBOX SUPPORT	SUPPORT BOITE DE RENVOI	HALTERUNG VORGELEGEGEH-USE	SOPORTE CAJA TRANSMISIËN

TAV. 124

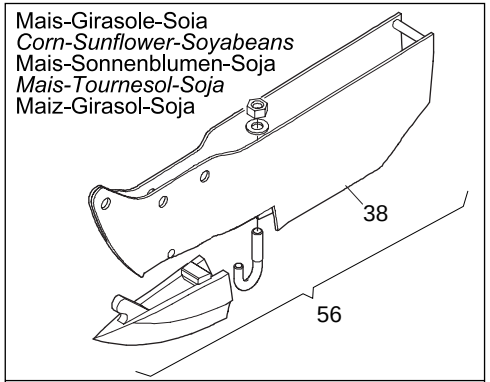

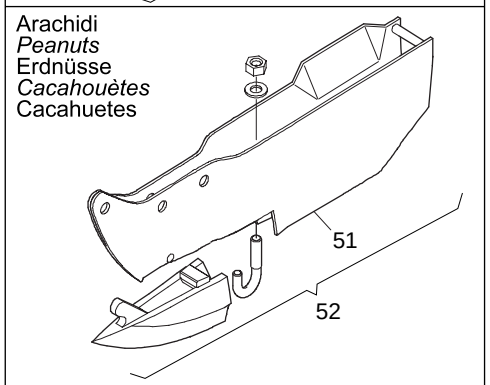

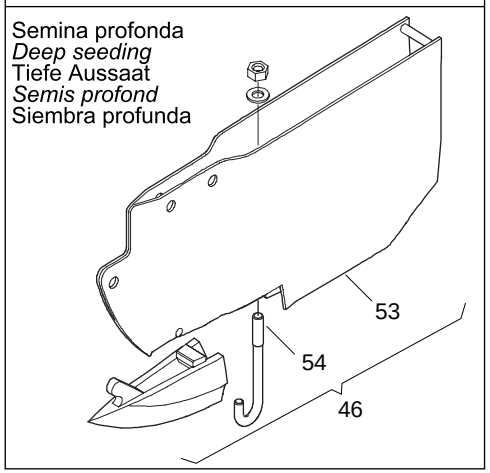

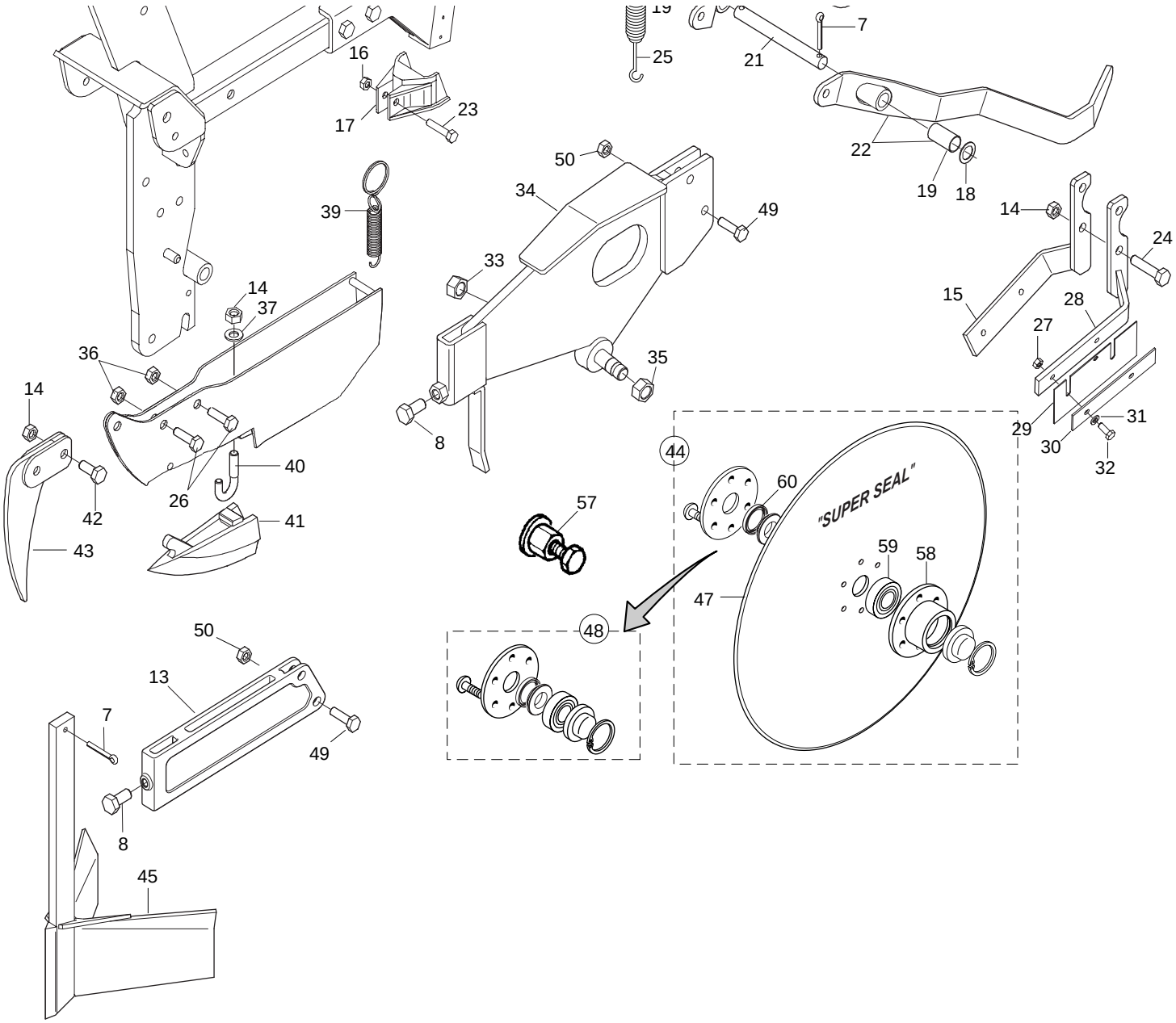

GASPARDO

ELEMENTI ASSOLCATORI

TAV. 124

Pos.	Cod.	Descrizione	Description	Description	Benennung	Descripcion
1	G65337015	MOLLA TRAZ.ZN REGOL.ELEM. SP	TRACTION SPRING ZN REGUL. ELEM	RESSORT TRACT. ZN REGL. ELEMEN	ZUGFEDER ZN ELEMENTEINSTELLUNG	MUELLE TRAC. ZN REGUL.ELEM. SP
2	G18903690	ATTACCO MOLLA	SPRING COUPLING	FIXATION RESSORT	KUPPLUNG FEDER	CONEXIN MUELLE O
3	G15422420	ATTACCO MOLLA SPARTIZOLLE	SOD BREAKER SPRING COUPLING	FIXATION RESSORT ECART. MOTTES	FEDERANSCHLUSS KLOTENRZUMER	CONEXIN MUELLE DIVISOR TERRONO
4	F01220022	DADO M 8X1,25 D980 8 ZN	SELF LOCKING NUT M8X1,25 980V	ECROU AUTOBL. M8X1,25 980-V	SELBSTSP.MUTT. M8X1,25 980-V	DADO AUTOBL. M8X1,25 980-V
5	G15422400	ASSE SPARTIZOLLE MOBILE	MOBILE SOD BREAKER SPINDLE	AXE ECARTEUR MOTTES MOBILE	ACHSE MOBILER KLOTENRZUMER	EJE DIVISOR DE TERRONES MVIL A
6	G15422390	SUPPORTO SPARTIZOLLE MOBILE	MOBILE SOD BREAKER SUPPORT	SUPP. ECARTEUR MOTTES MOBILE	HALTERUNG MOBILER KLOTENRZUMER	SOPORTE DIVISOR DE TERRONES MO
7	F02200227	COPIGLIA 5X 30 U1336 ZN	SPLIT PIN 5 X30 1336 GALVAN.	GOUPILLE 5 X30 1336 ZN	SPLINT 5 X30 1336 ZN	PASADOR 5 X30 1336 ZN
8	F01020510	VITE M12X1,75X30 U5739 8.8 ZN	BOLT M 12X30	VIS M 12X30	SCHRAUBE M 12X30	TORNILLO M 12X30
9	G15422410	FERMO SPARTIZOLLE MOBILE	MOBILE SOD BREAKER STOP	ARRET ECARTEUR MOTTES MOBILE	FESTSTELLVOR. MOBILER KLOTENRZ	BLOQUEO DIVISOR DE TERRONES MO
10	G18800560	BOCCOLA 8,25 X16 X7	BUSHING 8.25 X 16 X 7	BOITE 8-25 X16 X7	BsCHSE 8-25 X16 X7	CASQUILLO 8-25 X16 X7
11	F01420048	ROS.M8 8,4X 24X 2 U6593 ZN	PLANE WASHER D.8	RONDELLE D.8	SCHEIBE D.8	ARANDELA D.8
12	F01020063	VITE M8X1,25X 35 U5737 8.8 ZN	BOLT 8 X35 5737 8.G GALVANIZED	VIS 8 X35 5737 8.G ZN	SCHRAUBE 8 X35 5737 8.G ZN	TORNILLO 8 X35 5737 8.G ZN
13	G19203990	SUPP.SPARTIZOLLE				
14	F01200270	DADO M10X 1,5 U5588 6.8 ZN	NUT M10	ECROU M10	MUTTER M10	DADO M10
15	G15422211	SUPP.RASCHIATERRA DISCHI DX	RIGHT SOIL SCRAPER DISC SUPP.	SUPP.RACLE-BOUE DISQUES DRT	HALTER.ERDSCHABER SCHEIBEN REC	SOP.RASCADOR TIERRA DISCOS DER
16	F01230022	DADO M 6X 1 D982 8 ZN	NORM.SELF-LOCKING NUT 6 GALVAN	ECROU AUTOB.NOR.6 ZN	SELBSTSP. MUTTER NOR.6 ZN	TUERCA AUTOB. NOR. 6 ZN
17	G19002701	PROTEZIONE FOTOCELLULA >	PHOTOCELL PROTECTION	PROTECT CAPT PHOTOC SP4 >	SCHUTZ PHOTOZELLE	PROTECCIN FOTOCLULA PR
18	G18701820	RONDELLA 16,5X25X1,0 ZN	WASHER 16.5 X 25 X 1- GALVAN.	RONDELLE 16,5 X25 X1 ZN	UNTERLEGSCHEIBE 16,5 X25 X1 ZN	ARANDELA 16,5 X25 X1 ZN
19	F04150024	BOCCOLA PAP 15X17X25	PAP BUSH 15X17X25	BOITE PAP 15X17X25	BsCHSE PAP 15X17X25	CASQUILLO PAP 15X17X25
20	G16620690	COPRISEME MAIS DX				
21	G15421080	ASSE COPRISEME ZN	SEED COVER SPINDLE ZN	AXE COUVRE-GRAINES	SAMENDECKACHSE ZN	EJE CUBRESEMILLA ZN
22	G16620700	COPRISEME MAIS SX				
23	F01020408	VITE M 6X 1X 30 U5739 8.8 ZN	BOLT M 6X1X30	VIS M 6X1X30	SCHRAUBE M 6X1X30	TORNILLO M 6X1X30
24	F01020110	VITE M10X 1,5X40 U5737 8.8 ZN	BOLT 10X40 5737 8.G GALVANIZED	VIS 10X40 5737 8.G ZN	SCHRAUBE 10X40 5737 8.G ZN	TORNILLO 10X40 5737 8.G ZN
25	G18903170	MOLLA TRAZ.ZN RASCHIAT. SP530	TRACTION SPRING ZN SCRAPER SP5	RESSORT TRACT. ZN RACLEUR SP53	ZUGFEDER ZN ABSCHABER SP530	MUELLE TRAC. ZN RASCADOR SP530
26	F01020476	VITE M10X 1,5X30 U5739 8.8 ZN	BOLT M 10X30	VIS M 10X30	SCHRAUBE M 10X30	TORNILLO M 10X30
27	F01200232	DADO M 6X 1 U5588 6.8 ZN				
28	G15422221	SUPP.RASCHIATERRA DISCHI SX	LEFT SOIL SCRAPER DISC SUPP.	SUPP.RACLE-BOUE DISQUES GCH	HALTER.ERDSCHABER SCHEIBEN LIN	SOP.RASCADOR TIERRA DISCOS IZQ
29	G15422231	RASCHIATERRA DISCO				
30	G15423400	DISTANZIALE	SPACER	ENTRETOISE	DISTANZSTsCK	DISTANZSTsCK
31	F01420036	ROS.M6 6,4X 18X 2 U6593 ZN	FLAT WASHER 6-6X 18X2 6593 ZN	ROND. PLATE 6-6X 18X2 6593 ZN	SCHEIBE 6-6X 18X2 6593 ZN	ARAND. PLANA 6-6X 18X2 6593 ZN
32	F01020403	VITE M 6X 1X 16 U5739 8.8 ZN	BOLT M 6X16	VIS M 6X16	SCHRAUBE M 6X16	TORNILLO M 6X16
33	F01200442	DADO M16X 1,5 U5589 6.8 ZN	NUT 16X1-5 UNI 5589 6.8 GALVAN	ECROU 16X1-5 UNI 5589 6.8 ZN	MUTTER 16X1-5 UNI 5589 6.8 ZN	TUERCA 16X1-5 UNI 5589 6.8 ZN
34	G15422361	SUPPORTO DISCHI	DISKS SUPPORT	SUPPORT DISQUES	SCHEIBENHALTERUNG	SOPORTES DISCOS
35	G15220540	DADO M16X1,5 SX	NUT M16X1-5 LEFT	ECROU M16X1-5 GCH	MUTTER M16X1-5 LI	TUERCA M16X1-5 IZQ
36	F01220033	DADO M10X 1,5 D980 8 ZN	NUT M10X 1,5 D980 8 ZB	ECRO.M10X 1,5 D980 8 ZB	MUTT.M10X 1,5 D980 8 ZB	TUER.M10X 1,5 D980 8 ZB
37	F01430023	ROS.M10 10,5X 18X0,9 U8842J ZN	WASHER D10 DIN 6798 D.INT.ZN	RONDELLE D10 DIN 6798 D. INT.	UNT. SCHEIBE D10 DIN 6798 D.IN	ARANDELA D10 DIN 6798 D.INT.ZN
38	G15420713	LAMIERE FALCIONE MAIS SP540	MAIZE COULTER SHEET SP540	TÈLES SOC MA¤S SP540	BLECHE S-SCHAR MAIS SP540	CHAPAS BOTA MA-Z SP540
39	G18902481	MOLLA TRAZIONE AGG.FALCIONE	COULTER HOOK-UP TRACT. SPRING	RESSORT TRACTION FIX. SOC	ZUGFEDER KUPPL. SÄSCHAR	MUELLE TRACCIÓN CONEX. BOTA
40	G22270428	GANCIO TAGLIENTE SP/S	HOOK - CUTTER SP/S	CROCHET HACHOIR SP/S	HAKEN SZSCHAR SP/S	GANCHO GUADA¾ADORA SP/S
41	G22270397	TAGLIENTE FALCIONE MAIS SP/S	CORN CUTTER EDGE SP/S	POINTE DE SOC MAIS SP520/540	SCHARSCHNEIDE MAIS SP/S	FILO DE CORTE. GUADA¾AD. MAIZ
42	F01020472	VITE M10X 1,5X25 U5739 8.8 ZN	BOLT 10X25 5739 8.G GALVANIZED	VIS 10X25 5739 8.G ZN	SCHRAUBE 10X25 5739 8.G ZN	TORNILLO 10X25 5739 8.G ZN
43	G15423390	PROLUNGA FALCIONE	COULTER EXTENSION	RALLONGE SOC	VERLÄNGERUNG SÄSCHAR	PROLONGACIÓN BOTA
44	G15225500	DISCO ASSOLC.PROTETTO COMPL.	COMPL. PROTECTED DISC COULTER	DISQUE DU SOC PROT+G+ COMPLET	GESCH_TZTE FURCHENFORMSCHEIBE	DISCO SURC.PROTEGIDO COMPL.
45	G15420852	ASS.SPIANATERRA	GROUND LEVELLER	CHASSE MOTTE SP540	EINHEIT ERDEBNER	APLANADORA DE TIERRA
46	G16620231	FALCIONE SEMINA PROFONDA	DEEP SEEDING COULTER	SOC SEMIS PROFOND	S-SCHAR TIEFE SAAT	BOTA SIEMBRA PROFUNDA
47	G13825091	DISCO ASSOLCATORE D.373	FURROW OPENER DISK D.373	DISQUE D. 373 6 T.D.6	SCHEIBE SZSCHARENREISSER D.373	DISCO SURCADOR D.373
48	G15226600	KIT X DISCO SUPER SEAL				
49	F01020479	VITE M10X 1,5X35 U5739 8.8 ZN	BOLT M 10X35	VIS M 10X35	SCHRAUBE M 10X35	TORNILLO M 10X35
50	F01200416	DADO M10X 1,5 U5589 6S ZN	NUT 10 UNI5589 6.8 GALVANIZED	ECROU 10 UNI 5589 6.8 ZN	MUTTER 10 UNI 5589 6.8 ZN	TUERCA 10 UNI 5589 6.8 ZN
51	G16620240	SUPPORTO FALCIONE ARACHIDI	SUPPORT PEANUT CUTTER	SUPPORT HACHOIR ARACHIDES	HALTERUNG SZSCHAR ERDN_SSE	SOPORTE GUADA¥ADORA CACAHUETE
52	G16620260	FALCIONE ARACHIDI COMPL.SP540	COMPL. PEANUT COULTER SP540	HACHOIR ARACHIDES COMPL.SP540	S-SCHAR ERDN_SSE KOMPL.SP540	BOTA CACAHUETES COMPL. SP540
53	G16620181	SUPPORTO FALCIONE SEMINA PROF.	CUTTER SUPPORT ASS. DEEP SEEDI	SUPPORT DE SOC SEMIS PROFOND	HALTERUNG SZSCHAR TIEFE AUSSA	CONJ. SOPORTE GUAD. SIEMBRA PR
54	G16620220	GANCIO TAGLIENTE SEM.PROFONDA	HOOK - CUTTER DEEP SEEDING	CROCHET HACHOIR SEMIS PROFOND	HAKEN SZSCHAR TIEFE AUSSAAT	GANCHO FILO DE CORTE SIEMBRA P
55	F01020481	VITE M10X 1,5X40 U5739 8.8 ZN	BOLT 10X40 5739 8.G GALVANIZED	VIS 10X40 5739 8.G ZN	SCHRAUBE 10X40 5739 8.G ZN	TORNILLO 10X40 5739 8.G ZN
56	G15420735	MONT.FALCIONE MAIS SP99				
57	G15225240	ESTRATTORE DISCHI ELEMENTO MT	SEED PLATE EXTRACTOR ELEM. MT	EXTRACTEUR DISQUE ELEMENT MT	SCHEIBENAUSZIEHER ELEMENT MT	EXTRACTOR DISCOS ELEMENTO MT
58	G15223651	SUPPORTO CUSCINETTO DISCO	DISK BEARING SUPPORT	SUPPORT PALIER DISQUE	SCHEIBENLAGERBsCHSE	SOPORTE COJINETE DISCO
59	F04010084	CUSC.D17D47 B22,2 3303 LLU/DDU	BEARING 3303 2RS	PALIER 3303 2RS	LAGER 3303 2RS	COJINETE 3303 2RS
60	F03011075	AN. TENUTA B1OF 24X32X4	SEALING RING G24X32X4	BAGUE D'ETANCHEITE G24X32X4	DICHTRING G24X32X4	ANILLO AISLADOR G24X32X4

TAV. 134

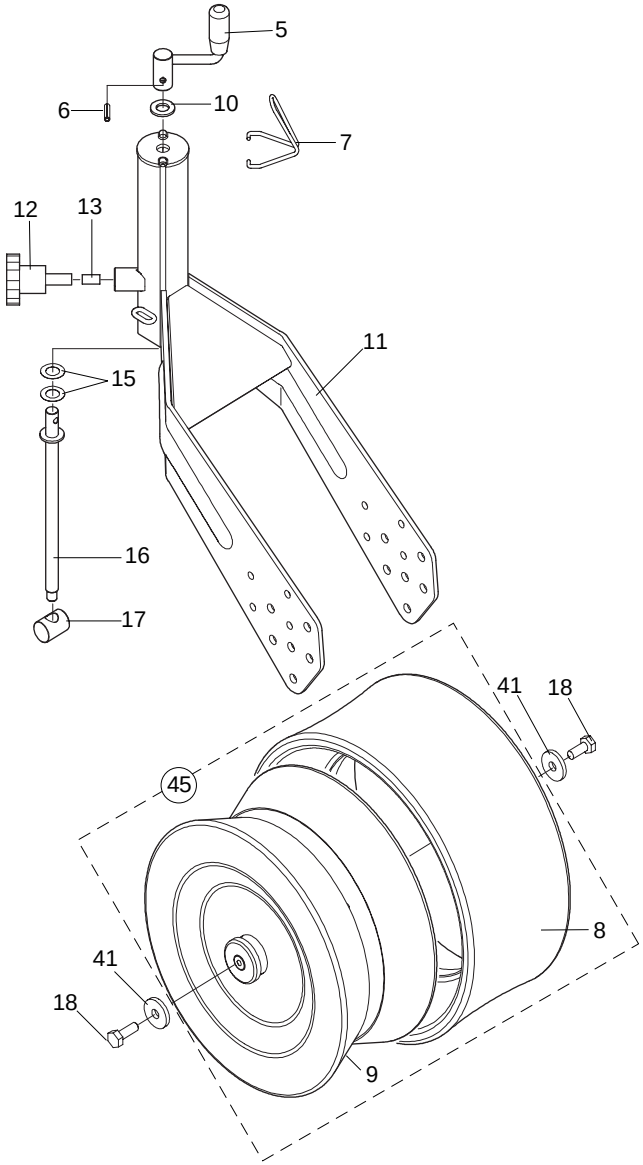

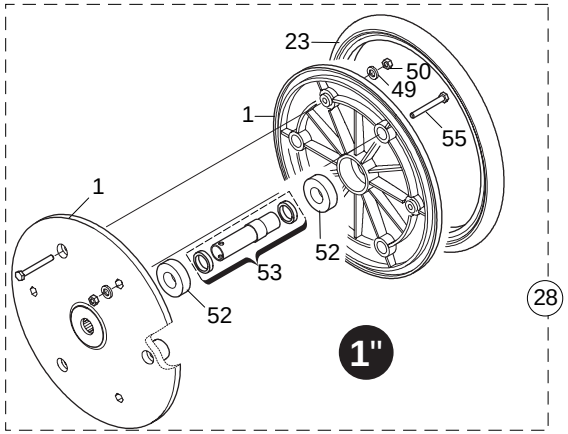

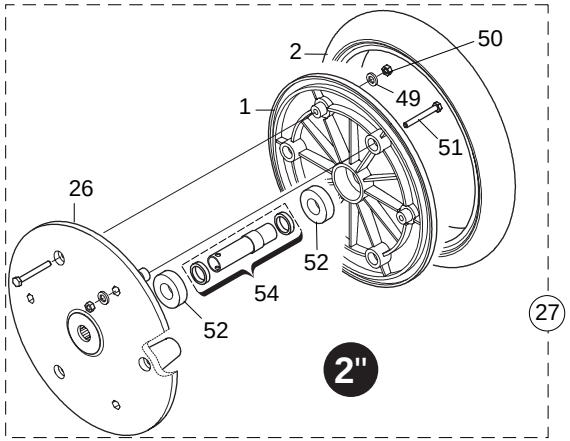

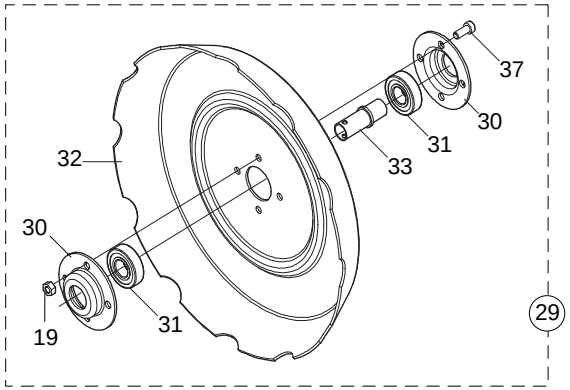

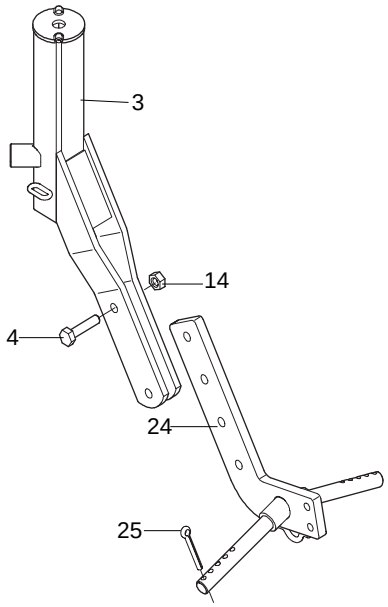

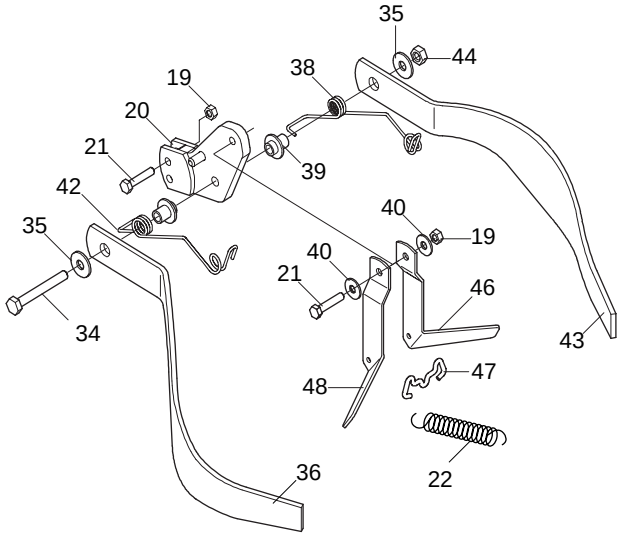

GASPARDO

RUOTE DI COMPRESSIONE

TAV. 134

Pos.	Cod.	Descrizione	Description	Description	Benennung	Descripcion
1	F06120146	SEMICERCHIO PLA RUOTA 1"	PLASTIC HALF RIM 1' WHEEL	DEMI-JANTE PLAST. ROUE 1"	HALBFELGE PLA RAD 1"	SEMIARO PL-ST.RUEDA 1"
2	F06120165	COPERTURA 2' X 13'	RUBBER RING 2X13'	COUVERT FARMF ROUE COMPR 2"X13	MANTEL 2' X 13'	CUBIERTA 2' X 13'
3	G15420913	SUPPORTO RUOTE A V	V-WHEEL SUPPORT	SUPPORT ROUES EN V	V RADER HALTERUNG	SOPORTE RUEDAS A V
4	F01020481	VITE M10X 1,5X40 U5739 8.8 ZN	BOLT 10X40 5739 8.G GALVANIZED	VIS 10X40 5739 8.G ZN	SCHRAUBE 10X40 5739 8.G ZN	TORNILLO 10X40 5739 8.G ZN
5	G22270235	MANIGLIA REGOLAZIONE B4	ADJUSTMENT HANDLE B4	POIGNEE REGLAGE B4	EINSTELLGRIFF B4	MANIJA REGULACIN B4 M
6	F02100109	SPINA E.P. 6X 24 U6873 C70 BR	PIN EL. .6 X24 DIN 1481	FICHE EL. 6 X24 DIN 1481	SPANNSTIFT 6 X24 DIN 1481	CLAVIJA EL.6 X24 DIN 1481
7	G65336100	MOLLA SPEC.FERMO MANIGLIA SP	SPEC SPRING HANDLE STOP SP	RESSORT SPEC. ARRET POIGNEE SP	SPEZIALFEDER GRIFFSPERRE SP	MUELLE ESPEC. BLOQUEO MANIJA S
8	F06120155	COPERTURA FARMF.370X165 'A'	COVERING FARMF.370X165 'A'	COUVERTURE FARMF. 370X165 'A'	MANTEL FARMF.370X165 'A'	CUBIERTA FARMF.370X165 'A'
9	F06120022	CERCHIO FARMF.370X165 COMPL.	FARMFLEX RING 370X165 ASSY.	JANTE FARMF. 370X165 COMPL.	REIFEN FARMF.370X165 KOMPL.	LLANTA FARMF.370X165 COMPL.
10	F01410088	ROS.M14 15X 28X2,5 U6592 ZN	WAS.M14 15X 28X2,5 U6592 ZB	RON.M14 15X 28X2,5 U6592 ZB	SCH.M14 15X 28X2,5 U6592 ZB	ARA.M14 15X 28X2,5 U6592 ZB
11	G16620430	SUPPORTO RUOTE				
12	F06220013	VOLANT.8L.PERN.M12X30-40 VPA55	8-LOBE PIN HANDWHEEL M12X30-40	VOLANT 8 LOBES PIVOT M12X30-40	HANDRAD.8L.ZAPFENM12X30-40 VPA	VOLDEL.8L.PERN.M12X30-40 VPA55
13	G14820991	FERMO REGOLAZIONE	ADJUSTMENT STOP	BUTEE REGLAGE	EINSTELLUNGSSPERRE	BLOQUEO REGULACIËN
14	F01200270	DADO M10X 1,5 U5588 6.8 ZN	NUT M10	ECROU M10	MUTTER M10	DADO M10
15	G22220073	RONDELLA 28X0,3X16,5	WASHER 28X0-3X16-5	RONDELLE 28X0-3X16-5	UNTERLEGSCHEIBE 28X0-3X16-5	ARANDELA 28X0-3X16-5
16	G22230062	VITE DI REGOLAZIONE	ADJUSTMENT BOLT	VIS DE REGLAGE	EINSTELLSCHRAUBE	TORNILLO DE REGULACIN S
17	G22230063	ELEMENTO ARTICOLATO	ARTICULATED ELEMENT	ELEMENT ARTICULE	GELENKELEMENT	ELEMENTO ARTICULADO
18	F01020476	VITE M10X 1,5X30 U5739 8.8 ZN	BOLT M 10X30	VIS M 10X30	SCHRAUBE M 10X30	TORNILLO M 10X30
19	F01220022	DADO M 8X1,25 D980 8 ZN	SELF LOCKING NUT M8X1,25 980V	ECROU AUTOBL. M8X1,25 980-V	SELBSTSP.MUTT. M8X1,25 980-V	DADO AUTOBL. M8X1,25 980-V
20	G15423460	ATTACCO COPRISEME RASCHIATERRA	SOIL SCRAPER SEED COV.LINKAGE	FIXATION COUVRE-GRAINES RACLEU	KUPPLUNG SAMENABDEC.ERDSCHABER	CONEXIÓN CUBRESEM.RASCADOR TI.
21	F01020449	VITE M 8X1,25X35 U5739 8.8 ZN	BOLT M 8X35	VIS M 8X35	SCHRAUBE M 8X35	TORNILLO M 8X35
22	G65337028	MOLLA TRAZ.ZN SUPP.RUOTA SV	TRACTION SPRING ZN WHEEL SUPP.	RESSORT TRACT. ZN SUPPORT ROUE	ZUGFEDER ZN RADHALTERUNG SV	MUELLE TRAC. ZN SOPORTE RUEDA
23	F06120181	ANELLO IN GOMMA 1 POLLICE MT	RUBBER RING 1X12'	COUVERT FARMF ROUE COMPR 1"X12	MANTEL FARMF.R.DRUCK .MT	CUBIERTA FARMF. R. COMPR. MT
24	G15423840	REGOLAZIONE RUOTE	WHEEL ADJUSTMENT	REGLAGE ROUES	RADEINSTELLUNG	REGULACIÓN RUEDAS
25	F02200227	COPIGLIA 5X 30 U1336 ZN	SPLIT PIN 5 X30 1336 GALVAN.	GOUPILLE 5 X30 1336 ZN	SPLINT 5 X30 1336 ZN	PASADOR 5 X30 1336 ZN
26	F06120147	SEMICERCHIO PLA RUOTA 2"	PLASTIC HALF RIM 2' WHEEL	DEMI-JANTE PLAST. ROUE 2"	HALBFELGE PLA RAD 2"	SEMIARO PL-ST.RUEDA 2"
27	F06120075	RUOTA DA 2 POLLICI MT	RUBBER WHEEL 2'X13' PLA.2 BEAR	ROUE CAOUTCHOUTEE	GUMMIRAD	RUEDA DE CAUCHO
28	F06120076	RUOTA DA 1 POLLICE MT	RUBBER WHEEL 1'X12' PLA.2 BEAR	ROUE CAOUTCHOUTEE	GUMMIRAD	RUEDA DE CAUCHO
29	G15423860	RUOTA POSTERIORE COMPL.	REAR WHEEL ASSY	ROUE POSTERIEURE COMPL.	HINTERES RAD KOMPLETT	RUEDA TRASERA COMPL.
30	G16242190	SUPPORTO CUSCINETTO	BEARING SUPPORT	SUPPORT PALIER	LAGERBsCHSE	SOPORTE COJINETE
31	F04010165	CUSC.D20 D47 B14 6204,2RSC3	BEARING 6204 2RS	PALIER 6204 2RS	LAGER 6204 2RS	COJINETE 6204 2RS
32	G14820871	RUOTA POSTERIORE FERRO	REAR IRON WHEEL	ROUE ARRIERE FER	EISENHINTERRAD	RUEDA TRAS. HIERRO
33	G15423850	BOCCOLA RUOTA FERRO	STEEL WHEEL BUSH	DOUILLE ROUE FER	BÜCHSE EISENRAD	BUJE RUEDA DE HIERRO
34	F01020128	VITE M10X 1,5X80 U5737 8.8 ZN				
35	F01420060	ROS.M10 10,5X 30X2,5 U6593 ZN	WASHER 10,5X30	RONDELLE 10,5X30	SCHEIBE 10,5X30	ARANDELA 10,5X30
36	G10120621	COPRISEME SX	LEFT SEED COVER	COUVRE-GRAINES GHT.	LINKER SAMENABDECKER	CUBRESEMILLA IZQ.
37	F01040091	VITE M 8X1,25X20 U5931 8.8 ZN	SCREW 8 X20 5931 8.G ZN	VIS 8 X20 5931 8.G ZN	SCHRAUBE 8 X20 5931 8.G ZN	TORNILLO 8 X20 5931 8.G ZN
38	G18902910	MOLLA COPRISEME DX SP	RIGHT SEED COVER SPRING SP	RESSORT COUVRE-GRAINE DRT SP	FEDER SAMENABDECKER RE SP	MUELLE CUBRESEMILLAS DER SP
39	G15422500	BOCCOLA SUPP.MOLLA COPRISEMI	SEED COVER SPRING SUPPORT BUSH	BOITE SUPP. RESSORT COUVRE-GR.	BsCHSE HALTERUNG FEDERSAMENABD	CASQUILLO SUPER.MUELLE CUBRESE
40	F01420048	ROS.M8 8,4X 24X 2 U6593 ZN	PLANE WASHER D.8	RONDELLE D.8	SCHEIBE D.8	ARANDELA D.8
41	G18701140	RONDELLA 11 X35 X5	WASHER 11 X 35 X 5	RONDELLE 11 X35 X5	UNTERLEGSCHEIBE 11 X35 X5	ARANDELA 11 X35 X5
42	G18902920	MOLLA COPRISEME SX SP	LEFT SEED COVER SPRING SP	RESSORT COUVRE-GRAINE GCH SP	FEDER SAMENABDECKER LI SP	MUELLE CUBRESEMILLAS IZQ SP
43	G10120611	COPRISEME DX	RIGHT SEED COVER	COUVRE-GRAINES DRT.	RECHTER SAMENABDECKER	CUBRESEMILLA DER.
44	F01220033	DADO M10X 1,5 D980 8 ZN	NUT M10X 1,5 D980 8 ZB	ECRO.M10X 1,5 D980 8 ZB	MUTT.M10X 1,5 D980 8 ZB	TUER.M10X 1,5 D980 8 ZB
45	G14821590	RUOTA FARMFLEX 370X165 PROF.A	FARMFLEX WHEEL 370X165 DEPTH.A	ROUE FARMFLEX 370X165 PROF.A	RAD FARMFLEX 370X165PROF.A	RUEDA FARMFLEX
46	G15422481	RASCHIATERRA DX RUOTE A V	RIGHT 'V' WHEEL SOIL SCRAPER	RACLEUR DRT ROUES EN 'V'	ERDSCHABER RE 'V'-FTRMIGE RZDE	RASCADOR TIERRA DER RUEDAS EN
47	G18902930	AGGANCIO RASCHIATERRA	SOIL SCRAPER HOOK	ATTELAGE RACLEUR	KUPPLUNG ERDSCHABER	ENGANCHE RASCADOR TIERRA
48	G15422491	RASCHIATERRA SX RUOTE A V	LEFT 'V' WHEEL SOIL SCRAPER	RACLEUR GCH ROUES EN 'V'	ERDSCHABER LI 'V'-FTRMIGE RZDE	RASCADOR TIERRA IZQ RUEDAS EN
49	F01410037	ROS.M6 6,4X12,5X1,6 U6592 ZN	PLANE WASHER D.6	RONDELLE D.6	SCHEIBE D.6	ARANDELA D.6
50	F01230022	DADO M 6X 1 D982 8 ZN	NORM.SELF-LOCKING NUT 6 GALVAN	ECROU AUTOB.NOR.6 ZN	SELBSTSP. MUTTER NOR.6 ZN	TUERCA AUTOB. NOR. 6 ZN
51	F01020042	VITE M 6X 1X 50 U5737 8.8 ZN	BOL.M 6X 1X 50 U5737 8.8 ZG	VIS 6 X50 5737 8.G ZN	SCHRAUBE 6 X50 5737 8.G ZN	TORNILLO 6x50 5737 8.G ZN
52	F04010131	CUSC.D20 D42 B12 6004-2RSH EX>	BEARING 6004 2RS EX. SKF	ROULEMENT 6004	LAGER 6004	COJINETE 6004
53	G15226610	KIT DIST./GUARNIZIONI RUOTA V1				
54	G15226620	KIT DIST./GUARNIZIONI RUOTA V2				
55	F01020406	VITE M 6X 1X 25 U5739 8.8 ZN	BOLT M 6X25	VIS M 6X25	SCHRAUBE M 6X25	TORNILLO M 6X25

TAV. 142

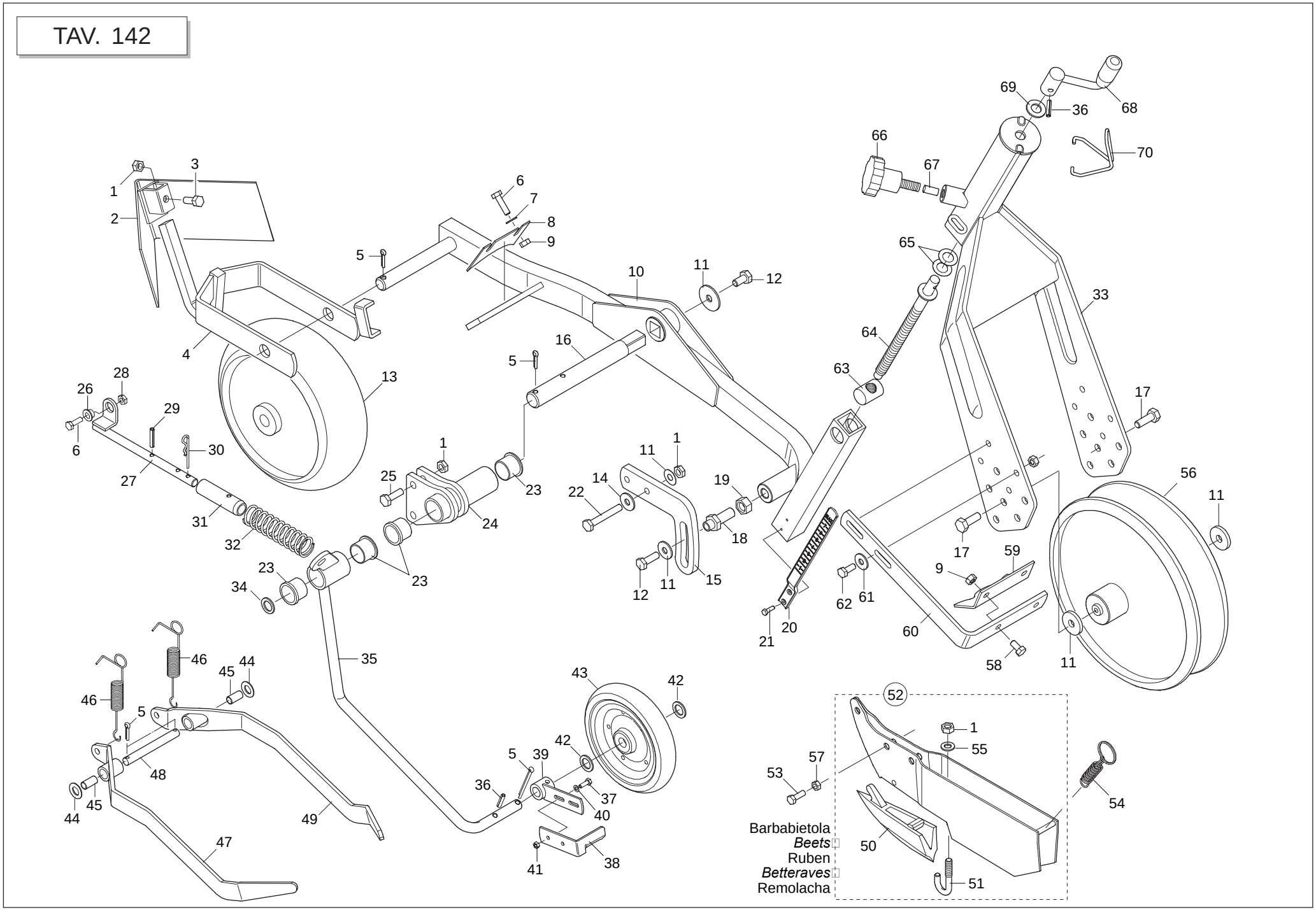

GASPARDO

BILANCIERE

TAV. 142

Pos.	Cod.	Descrizione	Description	Description	Benennung	Descripcion
1	F01200270	DADO M10X 1,5 U5588 6.8 ZN	NUT M10	ECROU M10	MUTTER M10	DADO M10
2	G22270241	SPARTIZOLLE BILANCIERE B4	SOD-BREAKER ROCKERS B4	ECARTEUR DE MOTTES BALANCIER B	KIPPHEBEL KLOTENRZUMER B4	DIVISOR DE TERRONES BALANCN BS
3	F01020472	VITE M10X 1,5X25 U5739 8.8 ZN	BOLT 10X25 5739 8.G GALVANIZED	VIS 10X25 5739 8.G ZN	SCHRAUBE 10X25 5739 8.G ZN	TORNILLO 10X25 5739 8.G ZN
4	G15422672	SUPPORTO RUOTA COMPRESSIONE	COMPRESS. WHEEL SUPPORT	SUPPORT ROUE DE COMPRESSION	HALTERUNG KOMPRESSIONSRAD	SOPORTE RUEDA DE COMPRESION
5	F02200246	COPIGLIA 6X 45 U1336 ZN	SPLIT PIN 6 X45 1336 GALVAN.	GOUPILLE 6 X45 1336 ZN	SPLINT 6 X45 1336 ZN	PASADOR 6 X45 1336 ZN
6	F01020440	VITE M 8X1,25X25 U5739 8.8 ZN	BOLT M8 X25 5739 8.8 ZN	VIS M8 X25 5739 8.8 ZN	SCHRAUBE M8 X25 5739 8.8 ZN	TORNILLO M8 X25 5739 8.8 ZN
7	F01410051	ROS.M8 8,4X 17X1,6 U6592 ZN	PLANE WASHER D.8	RONDELLE D.8	SCHEIBE D.8	ARANDELA D.8
8	G15420510	RASCHIATERRA BILANCIERE	SOIL SCRAPER ROCKER	RACLEUR BALANCIER	ERDSCHABER KIPPHEBEL	RASCADOR TIERRA BALANCN R
9	F01200244	DADO M 8X1,25 U5588 6.8 ZN	NUT M8	ECROU M8	MUTTER M8	DADO M8
10	G16620440	BILANCIERE	ROCKER	BALANCIER	KIPPHEBEL	KIPPHEBEL
11	G18701140	RONDELLA 11 X35 X5	WASHER 11 X 35 X 5	RONDELLE 11 X35 X5	UNTERLEGSCHEIBE 11 X35 X5	ARANDELA 11 X35 X5
12	F01020470	VITE M10X 1,5X20 U5739 8.8 ZN	BOLT M 10X20	VIS M 10X20	SCHRAUBE M 10X20	TORNILLO M 10X20
13	G15420490	RUOTINO ANT.BILANC.D.280	FRONT ROCKER WHEEL D.280	ROUET ANT. BALANC. D 260	KLEINES VORD. RAD KIPPHEBEL D.	RUEDECILLA DEL. BALANCN D.280R
14	F01420060	ROS.M10 10,5X 30X2,5 U6593 ZN	WASHER 10,5X30	RONDELLE 10,5X30	SCHEIBE 10,5X30	ARANDELA 10,5X30
15	G15423251	PIASTRA DI REGOLAZIONE	ADJUSTING PLATE	PLAQUE DE REGLAGE	EINSTELLPLATTE	PLACA DE REGULACIÓN
16	G15422572	ASSE BILANCIERE	ROCKER SPINDLE	AXE BALANCIER	KIPPHEBELACHSE	EJE BALANC
17	F01020476	VITE M10X 1,5X30 U5739 8.8 ZN	BOLT M 10X30	VIS M 10X30	SCHRAUBE M 10X30	TORNILLO M 10X30
18	G15423521	VITE REGOLAZIONE ZN	ADJUSTING SCREW - GALVANIZED	VIS RÉGLAGE ZN	STELLSCHRAUBE ZN	TORNILLO REGULACIÓN ZN
19	F01200432	DADO M14X 1,5 U5589 6S ZN	NUT M14X1.5	ECROU M14X1.5	MUTTER M14X1.5	DADO M14X1.5
20	G19003400	ASTA INDICAZIONE PROFONDITA'	DEPTH INDICATING ROD	TIGE INDICATION PROFONDEUR	TIEFENANZEIGESTAB	VARILLA INDICACIÓN PROFUNDIDAD
21	F02250077	RIVETTO STR. 3X 14 U9200A AL	3X14 ALUMINIUM PULL RIVET	RIVET A RUPTURE 3X14 ALUMINIUM	REISSNIETE3X14 ALL.	REMACHE DESGAR. 3X14 ALL.
22	F01020122	VITE 10X 1,5X 70 U5737 8.8 ZN	BOLT 10X 1,5X 70 U5737 8.8 ZB	VIS 10X 1,5X 70 U5737 8.8 ZB	SCHR.10X 1,5X 70 U5737 8.8 ZB	TORN.10X 1,5X 70 U5737 8.8 ZB
23	G66349003	BOCCOLA SINT.	BUSHING- SINTERED	BOITE FRITTEE	SYNTH. BUECHSE	CASQUILLO SINT.
24	G15423680	SUPPORTO BILANCIERE SP540	ROCKERS SUPPORT SP540	SUPPORT BALANCIER SP540	EINHEIT KIPPHEBEL SP540	SOP. BALANC N SP540
25	F01020110	VITE M10X 1,5X40 U5737 8.8 ZN	BOLT 10X40 5737 8.G GALVANIZED	VIS 10X40 5737 8.G ZN	SCHRAUBE 10X40 5737 8.G ZN	TORNILLO 10X40 5737 8.G ZN
26	G22250398	BOCCOLA BRACCIO SUPERIORE SV/2	UPPER ARM BUSHING SV/2	BOITE BRAS SUP. SV/2	BsCHSE OBERARM SV/2	CASQUILLO BRAZO SUPERIOR SV/2
27	G15423810	SUPPORTO MOLLA	SPRING SUPPORT	SUPPORT RESSORT	FEDERHALTERUNG	SOPORTE MUELLE
28	F01220022	DADO M 8X1,25 D980 8 ZN	SELF LOCKING NUT M8X1,25 980V	ECROU AUTOBL. M8X1,25 980-V	SELBSTSP.MUTT. M8X1,25 980-V	DADO AUTOBL. M8X1,25 980-V
29	F02100087	SPINA E.P. 5X 30 U6873 C70 BR	PIN EL. 5 X30 DIN 1481	FICHE EL. 5 X30 DIN 1481	SPANNSTIFT 5 X30 DIN 1481	CLAVIJA EL.5 X30 DIN 1481
30	F02200363	COPIGLIA R 3X 62 ZN	SPLIT PIN R 3X62	GOUPILLE R 3X62	SPLINT R 3X62	CHAVETA R 3X62
31	G15423820	BOCCOLA NYLON SUPPORTO MOLLA	SPRING-SUPPORTING NYLON BUSH	DOUILLE NYLON SUPPORT RESSORT	NYLONBÜCHSE FEDERHALTERUNG	BUJE NYLON SOPORTE MUELLE
32	G18903670	MOLLA COMPRESSIONE RUOTINO	COMPR. WHEEL SPRING	RESSORT COMPRESSION ROUET	FEDER DsNGUNG ROLLE	MUELLE COMPRESIN RUEDECILLA A
33	G16620430	SUPPORTO RUOTE				
34	G18701590	RONDELLA 25X35X2,5 ZN	WASHER 25 x 35 x2,5 ZB	RONDELLE 25 x 35 x2,5 ZB	UNTERLEGSCHEIBE 25 x 35 x2,5	ARANDELA 25 x 35 x2,5 ZB
35	G15423780	SUPPORTO RUOTINO	WHEEL SUPPORT	SUPPORT ROUET	HALTERUNG ROLLE	SOPORTE RUEDECILLA
36	F02100109	SPINA E.P. 6X 24 U6873 C70 BR	PIN EL. .6 X24 DIN 1481	FICHE EL. 6 X24 DIN 1481	SPANNSTIFT 6 X24 DIN 1481	CLAVIJA EL.6 X24 DIN 1481
37	F01020378	VITE M5X 0,8X 16 U5739 8.8 ZN	BOLT 5X16 5739 8.G GALVANIZED	VIS 5X16 5739 8.G ZN	SCHRAUBE 5X16 5739 8.G ZN	TORNILLO 5X16 5739 8.G ZN
38	G15423271	RASCHIATERRA	SOIL SCRAPER	RACLEUR	ERDSCHABER	RASCADOR TIERRA
39	G15421671	SUPPORTO RASCHIATERRA	SOIL SCRAPER SUPPORT	SUPPORT RACLEUR	HALTERUNG ERDSCHABER	SOPORTE RASCADOR TIERRA
40	F01420022	ROS.M5 5,5X 10X 1 U6593 ZG	WASHER M5 5,5X10X1 U6593 ZG	RONDELLE M5 5,5X10X1 U6593 ZG	SCHEIBE M5 5,5X10X1 U6593 ZG	ARANDELA M5 5,5X10X1 U6593 ZG
41	F01200220	DADO M 5X 0,8 U5588 6.8 ZN	NUT 5 UNI 5588 6.8 GALVANIZED	ECROU 5 UNI 5588 6.8 ZN	MUTTER 5 UNI 5588 6.8 ZN	TUERCA 5 UNI 5588 6.8 ZN
42	G20970025	RONDELLA 25,2X2X16,5	WASHER 25-2X2X16-5	RONDELLE 25-2X2X16-5	UNTERLEGSCHEIBE 25-2X2X16-5	ARANDELA 25-2X2X16-5
43	F06120066	RUOTINO FLEX 170 X 30	FLEX WHEEL 170 X 30	ROUET FLEX 170 X 30	ROLLE FLEX 170 X 30	RUEDECILLA FLEX 170 X 30
44	G18701820	RONDELLA 16,5X25X1,0 ZN	WASHER 16.5 X 25 X 1- GALVAN.	RONDELLE 16,5 X25 X1 ZN	UNTERLEGSCHEIBE 16,5 X25 X1 ZN	ARANDELA 16,5 X25 X1 ZN
45	F04150024	BOCCOLA PAP 15X17X25	PAP BUSH 15X17X25	BOITE PAP 15X17X25	BsCHSE PAP 15X17X25	CASQUILLO PAP 15X17X25
46	G18903170	MOLLA TRAZ.ZN RASCHIAT. SP530	TRACTION SPRING ZN SCRAPER SP5	RESSORT TRACT. ZN RACLEUR SP53	ZUGFEDER ZN ABSCHABER SP530	MUELLE TRAC. ZN RASCADOR SP530
47	G16620720	COPRISEME BIETOLE SX				
48	G15421080	ASSE COPRISEME ZN	SEED COVER SPINDLE ZN	AXE COUVRE-GRAINES	SAMENDECKACHSE ZN	EJE CUBRESEMILLA ZN
49	G16620710	COPRISEME BIETOLE DX				
50	G22270226	TAGLIENTE FALCIONE B4 SP/S	KNIFE COULTER SUGAR BEET SP	POINTE DE SOC BETT SP520/540	SCHARSPITZE RUBE SP	PONTA SURCADOR REMOLACHA SP
51	G22270428	GANCIO TAGLIENTE SP/S	HOOK - CUTTER SP/S	CROCHET HACHOIR SP/S	HAKEN SZSCHAR SP/S	GANCHO GUADA¾ADORA SP/S
52	G15422474	MONT.FALCIONE BIETOLE H118				
53	F01020479	VITE M10X 1,5X35 U5739 8.8 ZN	BOLT M 10X35	VIS M 10X35	SCHRAUBE M 10X35	TORNILLO M 10X35
54	G18902481	MOLLA TRAZIONE AGG.FALCIONE	COULTER HOOK-UP TRACT. SPRING	RESSORT TRACTION FIX. SOC	ZUGFEDER KUPPL. SÄSCHAR	MUELLE TRACCIÓN CONEX. BOTA
55	F01430023	ROS.M10 10,5X 18X0,9 U8842J ZN	WASHER D10 DIN 6798 D.INT.ZN	RONDELLE D10 DIN 6798 D. INT.	UNT. SCHEIBE D10 DIN 6798 D.IN	ARANDELA D10 DIN 6798 D.INT.ZN
56	G15421240	RUOTA 290X80 FLEX	FLEX -BRASILE' WHEEL 290X80	ROUE 290X80 FLEX 'BRASILE'	RAD 290X80 FLEX 'BRASILE'	RUEDA 290X80 FLEX 'BRASILE'
57	F01220033	DADO M10X 1,5 D980 8 ZN	NUT M10X 1,5 D980 8 ZB	ECRO.M10X 1,5 D980 8 ZB	MUTT.M10X 1,5 D980 8 ZB	TUER.M10X 1,5 D980 8 ZB
58	F01020432	VITE M 8X1,25X16 U5739 8.8 ZN	BOLT M 8X16	VIS M 8X16	SCHRAUBE M 8X16	TORNILLO M 8X16
59	G15421030	RASCHIATERRA RUOTA POSTERIORE	SOIL SCRAPER REAR WHEEL	RACLEUR ROUE POSTERIEURE	ERDSCHABER HINTERES RAD	RASCADOR TIERRA TRASERO
60	G15421022	SUPP.RASCHIATERRA RUOTA	SCRAPER SUPPORT WHEEL	SUPP. RACLEUR ROUES	HALTERUNG ERDSCHABER RADER	SOP.RASCADOR TIERRA RUEDAS
61	F01420048	ROS.M8 8,4X 24X 2 U6593 ZN	PLANE WASHER D.8	RONDELLE D.8	SCHEIBE D.8	ARANDELA D.8
62	F01020440	VITE M 8X1,25X25 U5739 8.8 ZN	BOLT M8 X25 5739 8.8 ZN	VIS M8 X25 5739 8.8 ZN	SCHRAUBE M8 X25 5739 8.8 ZN	TORNILLO M8 X25 5739 8.8 ZN
63	G22230063	ELEMENTO ARTICOLATO	ARTICULATED ELEMENT	ELEMENT ARTICULE	GELENKELEMENT	ELEMENTO ARTICULADO
64	G22230062	VITE DI REGOLAZIONE	ADJUSTMENT BOLT	VIS DE REGLAGE	EINSTELLSCHRAUBE	TORNILLO DE REGULACIN S
65	G22220073	RONDELLA 28X0,3X16,5	WASHER 28X0-3X16-5	RONDELLE 28X0-3X16-5	UNTERLEGSCHEIBE 28X0-3X16-5	ARANDELA 28X0-3X16-5
66	F06220013	VOLANT.8L.PERN.M12X30-40 VPA55	8-LOBE PIN HANDWHEEL M12X30-40	VOLANT 8 LOBES PIVOT M12X30-40	HANDRAD.8L.ZAPFENM12X30-40 VPA	VOLDEL.8L.PERN.M12X30-40 VPA55
67	G14820991	FERMO REGOLAZIONE	ADJUSTMENT STOP	BUTEE REGLAGE	EINSTELLUNGSSPERRE	BLOQUEO REGULACIÉN
68	G22270235	MANIGLIA REGOLAZIONE B4	ADJUSTMENT HANDLE B4	POIGNEE REGLAGE B4	EINSTELLGRIFF B4	MANIJA REGULACIN B4 M
69	F01410088	ROS.M14 15X 28X2,5 U6592 ZN	WAS.M14 15X 28X2,5 U6592 ZB	RON.M14 15X 28X2,5 U6592 ZB	SCH.M14 15X 28X2,5 U6592 ZB	ARA.M14 15X 28X2,5 U6592 ZB
70	G65336100	MOLLA SPEC.FERMO MANIGLIA SP	SPEC SPRING HANDLE STOP SP	RESSORT SPEC. ARRET POIGNEE SP	SPEZIALFEDER GRIFFSPERRE SP	MUELLE ESPEC. BLOQUEO MANIJA S

TAV. 273

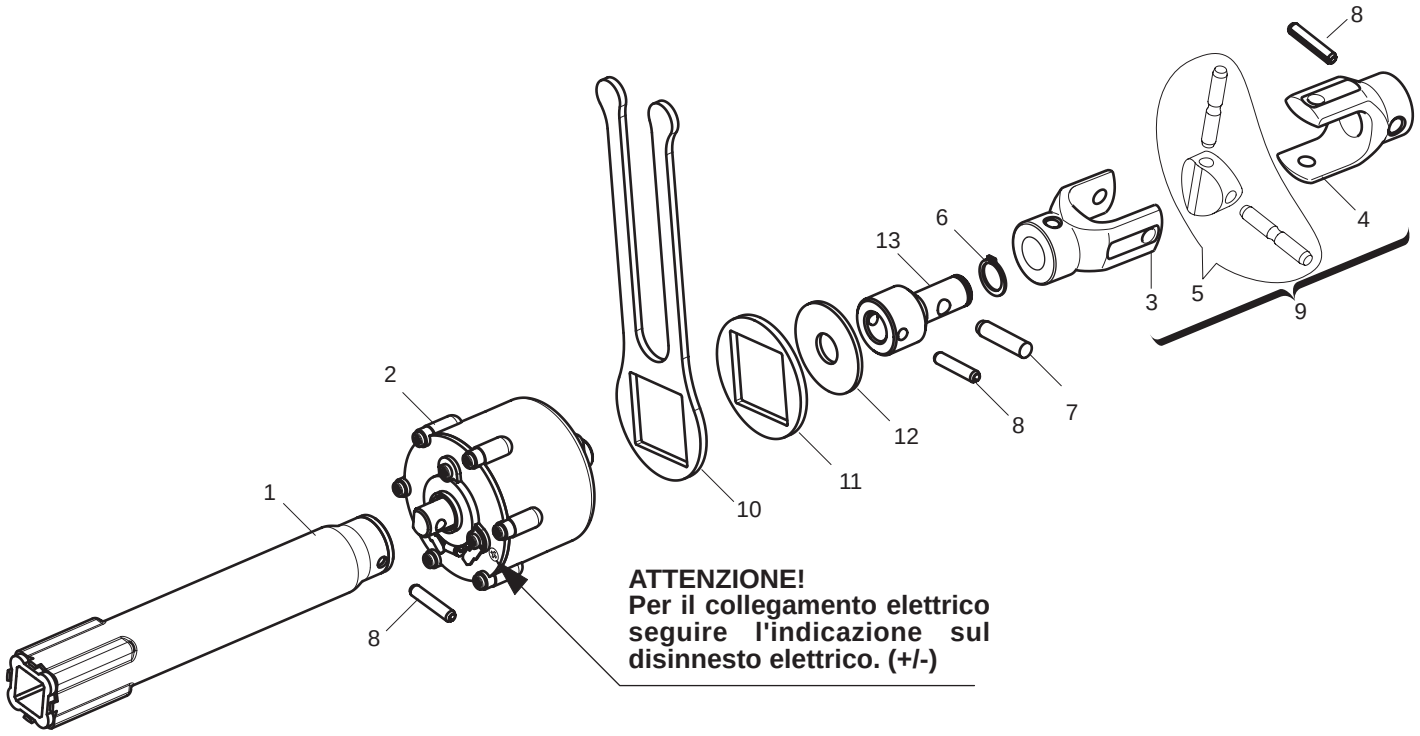

GASPARDO

ESCLUSIONE ELETTRICA FILE DI SEMINA

TAV. 273

Pos.	Cod.	Descrizione	Description	Description	Benennung	Descripcion
1	G15424011	INNESTO ESCL.ELETTRICA SP	ELECTRIC DISABLE CONNECTION SP	ACCOUPL. EXCL.+LECTRIQUE SP	STECKVORRICHT.ELEKT.AUSSCHALTU	CONECTOR DESC.EL+CTRICA SP
2	G16033701	DISINNESTO ELETTRICO 180 COMPL	COMPL. ELECTRIC RELEASE 180	D+BRAYAGE +LECTRIQUE 180 COMPL	ELEKTRISCHE ENTKUPPLUNG 180 KO	DESCONEXIËN EL+CTRICA 180 COMP
3	G19204080	FORCELLA				
4	G19204090	FORCELLA				
5	G22270454	CROCIERA COMPL. SP/S	SPIDER SP/S	CROSILLON COMPL CARDAN TRANSM	GELENKKREUZ KOMPL. SP/S	CRUCETA COMPL. SP/S
6	F02050045	ANELLO E. DE 16X 1 U7435 C70	SEEGER RING 16X 1 U7435 C70	BAGUE SEEGER 16 X 1 U7435 C70	SEEGERING 16 X 1 U7435 C70	ANILLO 16X 1 U7435 C70
7	F04150011	BOCCOLA AUTOL.40,5X30X5X33	SELF-LOCKING BUSHING 40-5X30X5	BOITE AUTOL. 40-5X30X5X33	BUCHSE SELBST. 40-5X30X5X33	CASQUILL0 AUTOL.40-5X30X5X33
8	F02100114	SPINA E.P. 6X 30 U6873 C70 BR	ELASTIC PIN 6X30	GOUJON ELASTIQUE 6X30	SPANNHUELSE 6X30	ESPINA ELASTICA 6X30
9	G15423980	FORCELLE SNODO ESCL.ELET.COMPL	FORK ELECTRIC DISABLE COMPLET	FOURCHETTE EXCL. +LECTR. COMPL	STAFEL ELEKT.AUSSCHALTU KOMPL.	HORQUILLA DESC.EL+CTRICA COMPL
10	G16033750	FERMO DISINNESTO ELETTRICO ZN	UNCOUPLING ELECTRIC STOP	ARRET DEBRAYAGE +LECT.	FESTSTELL. AUSKUPPLUNG EL.	BLOQUEO DESCONEXIN EL.
11	G16033740	DISTANZIALE DISINNESTO ELET.ZN	UNCOUPLING ELECTRIC SPACER	ENTRETOISE DEBRAYAGE +LECT.	DISTANZST_CK AUSKUPPLUNG EL.	DISTANCIADOR DESCONEXIN EL.
12	G18701970	RONDELLA 16X48X2,5	WASHER 16X48X2,5	RONDELLE 16X48X2,5	UNTERLEGSCHEIBE 16X48X2,5	ARANDELA 16X48X2,5
13	G16033730	ADATTATORE CROCIERA	SPIDER ADAPTOR	ADAPTATEUR CROISIERE	PASSST_CK GELENKKREUZ	ADAPTADOR CRUCETA

TAV. 155

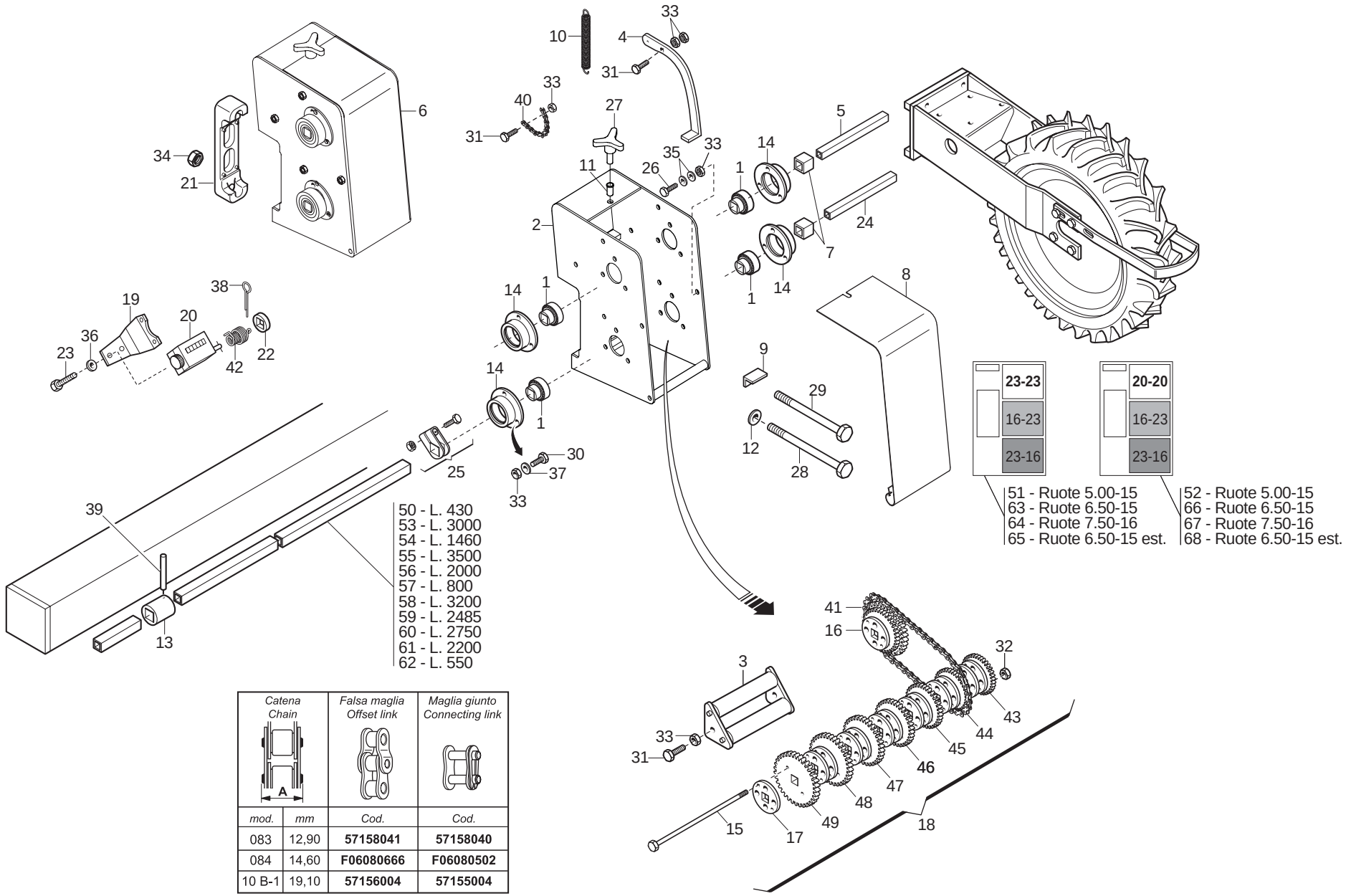

Catena Chain		Falsa maglia Offset link	Maglia giunto Connecting link
mod.	mm	Cod.	Cod.
083	12,90	**57158041**	**57158040**
084	14,60	**F06080666**	**F06080502**
10 B-1	19,10	**57156004**	**57155004**

GASPARDO

CAMBIO

TAV. 155

Pos.	Cod.	Descrizione	Description	Description	Benennung	Descripcion
1	G14830390	CUSCINETTO FORO QUADRO	SQUARE-HOLED BEARING	ROULEMENT AL+SAGE CARR+	VIERKANTLAGER	COJINETE ORIFICIO CUADRADO
2	G16630840					
3	G15430321	RULLO TENDICATENA	CHAIN STRETCHER ROLLER	ROULEAU TENDEUR DE CHAINE	KETTENSPANNROLLE	RODILLO TENSOR DE CADENA
4	G15430331	LEVA CAMBIO	GEAR LEVER	LEVIER BOITE DE VITESSE	GETRIEBEHEBEL	PALANCA DE CAMBIO
5	G15430340	ASSE INGRANAGGI L.155	GEAR SPINDLE L.155	AXE ENGRENAGES L155	ACHSE ZAHNRZDER L.122	EJE ENGRANAJES L.155
6	G16630010	SCATOLA CAMBIO Q.150 COMPL.	GEARBOX 150	BOITE DE VITESSE 150	GETRIEBEKASTEN 150	CAJA DE CAMBIO DE VELOCIDAD 15
7	G15430501	DISTANZIALE INTERNO CAMBIO	GEARBOX INNER SPACER	ENTRETOISE INT. BOITE VITESSE	INNERES DISTANZSTsCK GETRIEBE	DISTANCIADOR INTERIOR CAMBIO
8	G15430711	COPERCHIO CAMBIO	GEAR COVER	COUVERCLE BOITE DE VITESSE	GETRIEBEDECKEL	TAPA CAMBIO
9	G15431020	FERMO VITE CAMBIO	GEAR SCREW STOP	ARRET VIS BOITE DE VITESSE	FESTSTELLVORRICH. GETRIEBESCHR	BLOQUEO TORNILLO
10	G18902970	MOLLA TRAZ.CAMBIO ZN SP	GALVAN. GEAR TRACT. SPRING SP	RESS. TRACT. BOITE VITESSE ZN	ZUGFEDER GETRIEBE ZN SP	MUELLE TRAC. CAMBIO ZN SP
11	F02250683	INSERTO FIL.M 8X17,5 ZN T.TOND	CYLINDRICAL NUT 8 TC 40	ECROU CYLINDRIQUE 8 TC 40	ZYLINDRISCHE MUTTER 8 TC 40	TUERCA CILINDRICA 8 TC 40
12	G18700690	RONDELLA 15 X40 X6 ZN	WASHER 15 X 40 X 6 ZN	RONDELLE 15 X40 X6 ZN	UNTERLEGSCHEIBE 15 X40 X6 ZN	ARANDELA 15 X40 X6 ZN
13	G22220085	SNODO	ARTICULATION	ARTICULATION	GELENK	ARTICULACIN A
14	G22230094	SUPPORTO CUSCINETTO	BEARING SUPPORT	SUPPORT PALIER	LAGERBsCHSE	SOPORTE COJINETE
15	G19203260	VITE M5X115 ZN	BOLT M5X115 ZN	VIS M5X115 ZN	SCHRAUBE M5X115 ZN	TORNILLO M5X115 ZN
16	G22270152	ING.Z 16-23 RUOTA-CAMBIO SP	WHEEL- GEARBOX GEARS SP	ENGR. Z 16-23 ROUE BOITE VIT.	ZAHNRAD Z 16-23 GETRIEBERAD SP	ENGRAN. Z 16-23 RUEDA-CAMBIO
17	G22270162	RINFORZO INGR.ASSE DA 20 SP	AXLE GEAR REINFORCEMENT 20 SP	RENFORC. ENGREN. AXE DE 20 SP	VERSTZRKUNG ACHSZAHNRAD 20 SP	REFUERZO ENGRAN. EJE DE 20 SP
18	G22270163	BLOCCO CAMBIO ASSE DA 20 SP	20 CM SPINDLE GEARBOX SP	ENSEMBLE BOITE DE VITESSE	GETRIEBEBLOCK ACHSE 20 SP	BLOQUE CAMBIO EJE DE 20 SP
19	G22270217	SUPP.CONTAETT. CAMB.35 SP LM	HECTARE COUNTER GEAR SUPPORT 3	SUPPORT COMPT. D'HECT. B. VIT.	HALT. GETRIEBE HEKTARZZHLER 35	SOPORTE CONTADOR HECT. CAMB.35
20	G22270218	CONTAETTARI TEN. STAG. SP LM	HECTARE COUNTER SEAL SP LM	COMPT. D'HECT. ETANCHE SP LM	HEKTARZZHLER DICHT SP LM	CUENTA HECTAREAS ESTANCO
21	G19204030	SCONTRO FISS.150 2F D15				
22	G66248218	RONDELLA DISTAN.SPAND.	MAN. SPR. SPACER WASHER	RONDELLE ENTRETOISE EP. ENGRAI	ABSTANDSCHEIBE DsNGERSTREUER	ARANDELA DISTAN.ABONAD.
23	F01040025	VITE M 4X 0,7X10 U5931 8.8 ZN	BOLT 4 X10 5931 8.G GALVANIZ.	VIS 4 X10 5931 8.G ZN	SCHRAUBE 4 X10 5931 8.G ZN	TORNILLO 4 X10 5931 8.G ZN
24	G22500171	MANICOTTO L.175	SLEEVE L.175	MANCHON L.175	MUFFE L.175	MANGUITO L.175
25	G22505085	FERMO ASSE IN LAMIERA	PLATE AXLE STOP	ARRET AXE EN TOLE	FESTSTELLVORRICHTUNG BLECHACHS	BLOQUEO EJE DE CHAPA
26	F01060040	BUL.M 8X1,25X 20 U5732 4.6 ZG	BOLT 8 X20 5732 4.6 GALVANIZED	VIS 8 X20 5732 4.6 ZN	SCHRAUBE 8 X20 5732 4.6 ZN	TORNILLO 8 X20 5732 4.6 ZN
27	F06220018	VOLANTINO 3LOBI D.65-M8X15	3-LOBE HANDWHEEL D.65-M8X15	VOLANT 3 LOBES D.65-M8X15	HANDRAD 3 BUCKEL D.65-M8X15	VOLANTE 3 LOBI D.65-M8X15
28	F01020225	VITE M14X 2X160 U5737 8.8 BR	BOLT M 14 X160 5737 8.G	VIS M 14 X160 5737 8.G	SCHRAUBE M 14 X160 5737 8.G	TORNILLO M 14 X160 5737 8.G
29	F01020232	VITE M14X 2X200 U5737 8.8 ZN	BOLT 14X200 5737 8.G GALVANIZ.	VIS 14X200 5737 8.G ZN	SCHRAUBE 14X200 5737 8.G ZN	TORNILLO 14X200 5737 8.G ZN
30	F01020432	VITE M 8X1,25X16 U5739 8.8 ZN	BOLT M 8X16	VIS M 8X16	SCHRAUBE M 8X16	TORNILLO M 8X16
31	F01020449	VITE M 8X1,25X35 U5739 8.8 ZN	BOLT M 8X35	VIS M 8X35	SCHRAUBE M 8X35	TORNILLO M 8X35
32	F01200220	DADO M 5X 0,8 U5588 6.8 ZN	NUT 5 UNI 5588 6.8 GALVANIZED	ECROU 5 UNI 5588 6.8 ZN	MUTTER 5 UNI 5588 6.8 ZN	TUERCA 5 UNI 5588 6.8 ZN
33	F01200244	DADO M 8X1,25 U5588 6.8 ZN	NUT M8	ECROU M8	MUTTER M8	DADO M8
34	F01200306	DADO M14X 2 U5588 6.8 ZN	NUT M14X2	ECROU M14X2	MUTTER M14X2	DADO M14X2
35	F01410051	ROS.M8 8,4X 17X1,6 U6592 ZN	PLANE WASHER D.8	RONDELLE D.8	SCHEIBE D.8	ARANDELA D.8
36	F01410011	ROS.M4 4,3X 9X0,8 U6592 ZN	PLANE WASHER 4,5X 9 6592	RONDELLE 4,5X 9 6592	SCHEIBE 4,5X 9 6592	ARANDELA 4,5X 9 6592
37	F01430059	ROS.M8 8,4X 15X0,8 U8842J ZN	WASHER D8 DIN 6798 D.INT.ZN	RONDELLE D8 DIN 6798 D. INT. Z	UNT. SCHEIBE D8 DIN 6798 D. IN	ARANDELA D8 DIN 6798 D.INT.ZN
38	F02200228	COPIGLIA 5X 35 U1336 ZN	SPLIT PIN 5 X35 1336 GALVAN.	GOUPILLE 5 X35 1336 ZN	SPLINT 5 X35 1336 ZN	PASADOR 5 X35 1336 ZN
39	F02100087	SPINA E.P. 5X 30 U6873 C70 BR	PIN EL. 5 X30 DIN 1481	FICHE EL. 5 X30 DIN 1481	SPANNSTIFT 5 X30 DIN 1481	CLAVIJA EL.5 X30 DIN 1481
40	F06080008	CATENA 1/2 ISO 083 16 MAGLIE	CHAIN SECTION 1/2-3/16 16 MES	TRONÃON CHA+NE 1/2-3/16 16 MAI	KET.ABSCHN.1/2-3/16 16 GLIEDER	TRAMO CAD.1/2-3/16 16 ESLABONE
41	F06080230	CATENA 5/8 ISO 10B 46 MAGLIE	CUT-DOWN CHAIN .ISO 10B-1 46-L	TRONCON CHAINE ISO 10B-1 46 MA	KETTENLZNGE ISO 10B-1 46 GLIE	TRECHO CADENA ISO 10B-1 46 ESL
42	G65336098	MOLLA CONTAETTARI CAMB.35 SP	HECT. COUNT. GEAR SPRING 35 SP	RESS. COMPTEUR D'HECTARES CH	FEDER HEKTARZZHLER GETRIEBE.35	MUELLE CONTADOR DE HECTAREAS C
43	G66248162	INGRANAGGIO Z-17 SP	GEAR Z-17 SP	ENGRENAGE Z-17 SP	ZAHNRAD Z-17 SP	ENGRANAJE Z-17 SP
44	G66248163	INGRANAGGIO Z-18 SP	GEAR Z-18 SP	ENGRENAGE Z-18 SP	ZAHNRAD Z-18 SP	ENGRANAJE Z-18 SP
45	G66248164	INGRANAGGIO Z-19 SP	GEAR Z-19 SP	ENGRENAGE Z-19 SP	ZAHNRAD Z-19 SP	ENGRANAJE Z-19 SP
46	G66248165	INGRANAGGIO Z-20 SP	GEAR Z-20 SP	ENGRENAGE Z-20 SP	ZAHNRAD Z-20 SP	ENGRANAJE Z-20 SP
47	G66248166	INGRANAGGIO Z-21 SP	GEAR Z-21 SP	ENGRENAGE Z-21 SP	ZAHNRAD Z-21 SP	ENGRANAJE Z-21 SP
48	G66248167	INGRANAGGIO Z-22 SP	GEAR Z-22 SP	ENGRENAGE Z-22 SP	ZAHNRAD Z-22 SP	ENGRANAJE Z-22 SP
49	G66248168	INGRANAGGIO Z-23 SP	GEAR Z-23 SP	ENGRENAGE Z-23 SP	ZAHNRAD Z-23 SP	ENGRANAJE Z-23 SP
50	G11430240	ASSE TRASMISSIONE L.430	TRANSMISSION AXLE L.430	AXE TRANSMISSION L430	sBERTRAGUNGSACHSE L.430	EJE TRANSMISIN L 430 A
51	G19701402	DECAL.CAMBIO RUOTA 5,00-15	GEARBOX WHEEL 5,00-15 STICKER	ETIQ. BOITE DE VIT. ROUE 5,00-	AUFKLEBER GETRIEBE RAD 5,00-15	CAL. CAMBIOVEL. RUEDA 5,00-15
52	G19701401	DECALCOMANIA TABELLA CAMBIO SP	GEAR CHART STICKER SP	DECALC. TABLEAU BOITE DE V. SP	ABZIEHB. TABELLE GETR. SP	CALCOMANIA TABLA CAMBIO SP
53	G13831520	ASSE TRASMISSIONE L.3000	TRANSMISSION AXLE L.3000	AXE TRANSMISSION L3000	sBERTRAGUNGSACHSE L.3000	EJE TRANSMISIN L 3000 A
54	G20860090	ASSE SX 5F.60 L.1460	AXLE- LEFT 5-R.60 L.1460	AXE GCH. 5 RANGEES 60 L. 1460	ACHSE LI 5R.F.60 L.1460	EJE IZQ. 5 FILA. 60 L.1460
55	G22220250	ASSE SX 6 FILE L.3500	AXLE LEFT 6-ROW L.3500	AXE GCH. 6 RANGEES L. 3500	ACHSE LINKS 6 REIHEN L.3500	EJE IZQ. 6 FILAS L.3500
56	G22230141	ASSE SEMINAT.6F.CM.80 L.2000	AXLE- 6-ROW SEEDER MACH. 80 CM	AXE SEMEUR 6 RANGEES CM. 80 L.	ACHSE SZAELEMENT 6 R.CM.80 L.2	EJE SEMBR. 6 FILAS. CM.80 L.20
57	G22230142	ASSE 4 FILE L.800	4-ROW SPINDLE L.800	AXE 4 RANGEES L. 800	ACHSE 4 REIHEN B. 800	EJE 4 FILAS L.800
58	G22250031	ASSE TRASM.SEMINAT.L.3200 SV	AXLE- SEEDING MACH. GEARBOX L.	AXE ENTRAINEMENT SEMEUR L.3200	ACHSE SZELEMENTANTRIEB .L.3200	EJE TRANS.SEMBR. L.3200 SV
59	G13732200	ASSE TRASMISSIONE L.2485	TRANSMISSION AXLE L2485	AXE TRANSMISSION L.2485	sBERTRAGUNGSACHSE L.2485	EJE TRANSMISIN L 2485 A
60	G22250275	ASSE TRASM.SEMINAT.L.2750 SV	AXLE- SEEDING MACH. GEARBOX L.	AXE ENTRAINEMENT SEMEUR L. 275	ACHSE SZELEMENTANTRIEB L.2750	EJE TRANS.SEMBR. L.2750 SV
61	G22250276	ASSE TRASM.SEMINAT.L.2200 SV	AXLE- SEEDING MACH. GEARBOX L.	AXE ENTRAINEMENT SEMEUR L. 220	ACHSE SZELEMENT-ANTRIEB.L.2200	EJE TRANS.SEMBR. L.2200 SV
62	G22280071	ASSE RUOTA-CAMBIO L.550 ID	GEARBOX WHEEL AXLE L. 550 ID	AXE ROUE BOITE DE VITESSE	RADACHSE-GETRIEBE L.550 ID	EJE RUEDA-CAMBIO L.550 ID
63	G19701412	DECAL.CAMBIO RUOTA 6,50-15	GEARBOX WHEEL 6,50-15 STICKER	ETIQ. BOITE DE VIT. ROUE 6,50-	AUFKLEBER GETRIEBE RAD 6,50-15	CAL. CAMBIOVEL. RUEDA 6,50-15
64	G19701451	DECAL.CAMBIO RUOTA 7,50-16	GEARBOX WHEEL 7,50-16 STICKER	ETIQ. BOITE DE VIT. ROUE 7,50-	AUFKLEBER GETRIEBE RAD 7,50-16	CAL. CAMBIOVEL. RUEDA 7,50-16
65	G19703161	DECAL.CAMBIO RUOTA 6,50-15 EST	GEARBOX WHEEL 6,50-15 STICKER	ETIQ. BOITE DE VIT. ROUE 6,50-	AUFKLEBER GETRIEBE RAD 6,50-15	CAL. CAMBIOVEL. RUEDA 6,50-15
66	G19701411	DECAL.TAB.CAMB.SP RUOTA MAG.	GEAR CHART STICKER SP	DECALC. TABLEAU BOITE DE V. SP	ABZIEHB. TABELLE GETR. SP	CALCOMANIA TABLA CAMBIO SP
67	G19701450	DECAL.CAMBIO RUOTA 7,50-16	GEARBOX WHEEL 7,50-16 STICKER	ETIQ. BOITE DE VIT. ROUE 7,50-	AUFKLEBER GETRIEBE RAD 7,50-16	CAL. CAMBIOVEL. RUEDA 7,50-16
68	G19703160	DECAL.CAMBIO R 6.5 RUOTE EST.	R 6.5 OUT. WHEELS GEARBOX TRAN	DECALC. BOITE DE VITESSE R 6.5	AUFKLEBER GETRIEBE R 6.5 AUSSE	ETIQUETA ADHES. CAMBIO R 6.5 R

TAV. 165

47 - **M14x220**
59 - **M14x160**

32 - **5.00-15 - 6.50/80-15**
69 - **7.50-16**

16 - **5.00-15 - 6.50/80-15**
65 - **7.50-16**

5.00-15 - 31
6.50/80-15 - 67
7.50-16 - 68

5.00-15 - 6.50/80-15 - 1
7.50-16 - 54

5.00-15 - 6.50/80-15 - 4
7.50-16 - 55

5 - **5.00-15**
56 - **6.50/80-15**
57 - **7.50-16**

45 - **L. 1800**
19 - **L. 1000**
15 - **L. 800**
10 - **L. 1260**

5.00-15 - 6.50/80-15 - 34
7.50-16 - 70

22 - **5.00-15 - 6.50/80-15**
66 - **7.50-16**

5.00-15 - 11
6.50/80-15 - 62
7.50-16 - 63

13 - **5.00-15**
13 - **6.50/80-15**
64 - **7.50-16**

35 - **5.00-15**
71 - **6.50/80-15**
72 - **7.50-16**

36 - **5.00-15**
21 - **6.50/80-15**

37 - **5.00-15**
17 - **6.50/80-15**
18 - **7.50-16**

5.00-15 - 58
6.50/80-15 - 60
7.50-16 - 61

Catena Chain		Falsa maglia Offset link	Maglia giunto Connecting link
mod.	mm	Cod.	Cod.
083	12,90	**F06080655**	**F06080501**
084	14,60	**F06080666**	**F06080502**
10 B-1	19,10	**F06080644**	**F06080499**

	Pos.
Z10	38
Z15	39
Z16	40
Z23	41
Z23 r.l.	42
Z25	43
Z30	44

< 2004

Ruote - Wheels
- 5.00-15
- 5.00-12
- 6.00-16

Ruote - Wheels
- 6.50/80-15
- 7.50-16
- 20x8.00-10 (*)
- 26x12.00-12 (*)
- 10.0x8/80-12 (*)
- 10.0/75-15.3 (*)
- 13.0/65-18 (*)

(*) a saldare - by welding

Ingranaggi trasmissione seminatori			
A	Z16	Z23	Z23
B	Z23	Z16	Z23
A	Z16	Z23 r.l.	Z23
B	Z23 r.l.	Z16	Z23 r.l.

Ingranaggi trasmissione spandiconcime e microgranulatore		
A	Z10	Z15
B	Z30	Z25

GASPARDO

RUOTE DI TRASMISSIONE

TAV. 165

Pos.	Cod.	Descrizione	Description	Description	Benennung	Descripcion
1	G16630360	CARTER SX	LEFT CASE	CARTE GCH	GEHZUSE LI	CARTER IZQ
2	F01020472	VITE M10X 1,5X25 U5739 8.8 ZN	BOLT 10X25 5739 8.G GALVANIZED	VIS 10X25 5739 8.G ZN	SCHRAUBE 10X25 5739 8.G ZN	TORNILLO 10X25 5739 8.G ZN
3	F01020481	VITE M10X 1,5X40 U5739 8.8 ZN	BOLT 10X40 5739 8.G GALVANIZED	VIS 10X40 5739 8.G ZN	SCHRAUBE 10X40 5739 8.G ZN	TORNILLO 10X40 5739 8.G ZN
4	G16630380	SCONTRO 100X70-3 4F11 70X40	STRIKER PLATE 100X70-3 4F	BUTEE 100X70-3 4F	ANSCHLAG 100X70-3 4F	ELEMENTO DE EMPALME 100X70-3 4
5	G22270280	ASSE RUOTA TRASM.NORMALE SP/S	NORMAL DRIVE WHEEL AXLE	AXE ROUE ENTRAINEMENT 5.00-15	RADACHSE NORMALER ANTRIEB SP/S	EJE RUEDA TRANS. NORMAL SP/S
6	F01200270	DADO M10X 1,5 U5588 6.8 ZN	NUT M10	ECROU M10	MUTTER M10	DADO M10
7	F04100137	SUPPORTO FY 25 TF	SUPPORT FY 25 TF	SUPPORT FY 25 TF	HALTERUNG FY 25 TF	SOPORTE FY 25 TF
8	F02050101	ANELLO E. DE 25X 1,2 U7435 C70	SEEGER RING E. 25X1,2 7435 C70	SEEGER E. 25X 1,2 U7435 C70	SEEGERING E. 25X 1,2 U7435 C70	ANILLO E. 25X 1,2 U7435 C70
9	F01010365	VITE M18X1,5X 50 U5740 8.8 ZN	SCREW 18X55 MB 5740 8.G ZN	VIS 18X55 MB 5740 8.G ZN	SCHRAUBE 18X55 MB 5740 8.G ZN	TORNILLO 18X55 MB 5740 8.G ZN
10	G22270049	ASSE 4F.85-6F.50 L.1260	4-ROW SPINDLE - 85-6-ROW-50 L.	AXE 4 RANGEES 85-6 RANGEES 50	ACHSE 4 REIHEN 85-6 REIH. 50	EJE 4 FILAS. 85-6 FILAS. 50 L.
11	G15430090	RASCHIATERRA	SOIL SCRAPER	RACLEUR	ERDSCHABER	RASCADOR TIERRA
12	F01420060	ROS.M10 10,5X 30X2,5 U6593 ZN	WASHER 10,5X30	RONDELLE 10,5X30	SCHEIBE 10,5X30	ARANDELA 10,5X30
13	F01250040	DADO COLON. 12X1.5 ZN	COLUMN NUT M12X1.5 STUD BOLT	ECROU M12X1. 5 COLONNE	SCHRAUBBOLZENMUTTER M12X1.5	TUERCA 12X1.5 COLUMNA
14	F02200452	SPINA SCATTO D.4,4 B/80 ZN	SNAP PIN D.4-4 B/80	FICHE A DETENTE D. 4-4 B/80	EINRASTSTIFT D 4-4 B/80	CLAVIJA DE MUELLE D.4-4 B/80
15	G22230142	ASSE 4 FILE L.800	4-ROW SPINDLE L.800	AXE 4 RANGEES L. 800	ACHSE 4 REIHEN B. 800	EJE 4 FILAS L.800
16	G16630311	SUPPORTO TRASMISSIONE SP540				
17	F06120207	CERCHIO 5J 15 H2 PV RAL 9001				
18	F06120208	CERCHIO 7.50-16 PV TU	RING 7.50-16 PV TU	JANTE 7.50-16 PV TU	REIFEN 7.50-16 PV TU	LLANTA 7.50-16 PV TU
19	G22230138	ASSE CAMBIO 4F.80-6F.45 L.1000	GEAR SPINDLE 4-ROW 80- 6-ROW.4	AXE BOITE DE VITESSE 4 RA	GETRIEBEACHSE 4 R. 80-6 R.45 L	EJE CAMBIO 4 FILAS. 80-6 FILAS
20	G16630810	KIT INGR.Z8 5/8"X3/8" CUSC.				
21	F06120135	CAMERA 15 T 340	CHAMBER 15 T 340	CHAMBRE 15 T 340	KAMMER 15 T 340	CAMARA 15 T 340
22	G16630350	CARTER DX	RIGHT CASE	CARTER DRT	GEHZUSE RE	CARTER DER
23	G22505085	FERMO ASSE IN LAMIERA	PLATE AXLE STOP	ARRET AXE EN TOLE	FESTSTELLVORRICHTUNG BLECHACHS	BLOQUEO EJE DE CHAPA
24	G66248218	RONDELLA DISTAN.SPAND.	MAN. SPR. SPACER WASHER	RONDELLE ENTRETOISE EP. ENGRAI	ABSTANDSCHEIBE DsNGERSTREUER	ARANDELA DISTAN.ABONAD.
25	F01020432	VITE M 8X1,25X16 U5739 8.8 ZN	BOLT M 8X16	VIS M 8X16	SCHRAUBE M 8X16	TORNILLO M 8X16
26	G22220083	RONDELLA AD IMBOCCO	LEAD-IN WASHER	RONDELLE EMBOUTIE	TRICHTERSCHEIBE	ARANDELA DE MUESCA
27	F01240024	DADO M 8X1,25 U5448 5.8 ZN	NUT 8 UNI 5448 5.8 ZN	ECROU 8 UNI 5448 5.8 ZN	MUTTER 8 UNI 5448 5.8 ZN	TUERCA 8 UNI 5448 5.8 ZN
28	G14830390	CUSCINETTO FORO QUADRO	SQUARE-HOLED BEARING	ROULEMENT AL+SAGE CARR+	VIERKANTLAGER	COJINETE ORIFICIO CUADRADO
29	G22230094	SUPPORTO CUSCINETTO	BEARING SUPPORT	SUPPORT PALIER	LAGERBsCHSE	SOPORTE COJINETE
30	F01220022	DADO M 8X1,25 D980 8 ZN	SELF LOCKING NUT M8X1,25 980V	ECROU AUTOBL. M8X1,25 980-V	SELBSTSP.MUTT. M8X1,25 980-V	DADO AUTOBL. M8X1,25 980-V
31	G16630290	SUPPORTO RUOTA 5,00-15	WHEEL SUPPORT 5,00-15	SUPPORT ROUE 5,00-15	RADLAGER 5,00-15	SOPORTE RUEDA 5,00-15
32	G16630320	ATTACCO AL SUPPORTO RUOTA	SUPP. WHEEL COUPLING	FIXATION SUPPORT ROUET	KUPPLUNG HALT. KL. RAD	CONEXIN SOP. RUEDECILLA
33	G19704690	DECAL.DISP.CATENE/INGR.R.POST.	STICKER	DECALCOMANIE	ABZIEHBILDER	CALCOMANIAS
34	F06080168	CATENA 5/8 ISO 10B 86 MAGLIE	CUT-DOWN CHAIN .ISO 10B-1 86 -	TRONCON CHAINE ISO 10B-1 86 MA	KETTENLZNGE ISO 10B-1 186 GLIE	TRECHO CADENA ISO 10B-1 86 ESL
35	F06120170	COPERTURA 5.00-15 IM 110 6PR	COVERING 500-15 IM110 4PR	COUVERTURE 500-15 IM110 4PR	MANTEL 500-15 IM110 4PR	CUBIERTA 500-15 IM110 4PR
36	F06120134	CAMERA 15 L 290	CHAMBER 15 L.290	CHAMBRE 15 L 290	KAMMER 15 L 290	CAMARA 15 L 290
37	F06120206	CERCHIO 3.00 D 15 PV RAL 9001				
38	G22220113	INGRANAGGIO Z-10 FERRO	GEAR Z-10 IRON	ENGRENAGE Z-10 FER	ZAHNRAD Z-10 EISEN	ENGRANAJE Z-10 HIERRO
39	G16630390	PIGNONE Z-15 ZN	PINION Z-15 ZN	PIGNON Z-15 ZN	RITZE Z-15 ZN	PINION Z-15 ZN
40	G16630400	PIGNONE Z-16 ZN.	PINION Z-16 ZN.	PIGNON Z-16 ZN.	RITZE Z-16 ZN.	PINION Z-16 ZN.
41	G16630410	PIGNONE Z-23 ZN.	PINION Z-23 ZN.	PIGNON Z-23 ZN.	RITZE Z-23 ZN.	PINION Z-23 ZN.
42	G16630370	INGRANAGGIO R.LIBERA Z-23 ZN	FREE WHEEL GEAR Z-23	ENGRENAGE Z-23 ROUE LIBRE	ZAHNRAD FREILAUF Z-23	ENGRANAJE R.LIBRE Z-23
43	G16630420	PIGNONE Z-25 ZN.	PINION Z-25 ZN.	PIGNON Z-25 ZN.	RITZE Z-25 ZN.	PINION Z-25 ZN.
44	G16630430	PIGNONE Z-30 ZN.	PINION Z-30 ZN.	PIGNON Z-30 ZN.	RITZE Z-30 ZN.	PINION Z-30 ZN.
45	G20870028	ASSE SERB.LATO TRAS.6F.L.1800	AXLE- GEARBOX SIDE- 6-ROW L.18	AXE RESERVOIR COTE ENTRAINEMEN	ACHSE BEHZLTER ANTRIEBSS. 6F.L	EJE DEPS. LADO TRANS. 6 FILA A
46	G19204030	SCONTRO FISS.150 2F D15				
47	F01020236	VITE M14X 2X220 U5737 8.8 BR	SCREW M14X2X220 U5737 8.8 BR	VIS M14X2X220 U5737 8.8 BR	SCHRAUBE M14X2X220 U5737 8.8	TORNILLO M14X2X220 U5737 8.8
48	F01200306	DADO M14X 2 U5588 6.8 ZN	NUT M14X2	ECROU M14X2	MUTTER M14X2	DADO M14X2
49	F02200452	SPINA SCATTO D.4,4 B/80 ZN	SNAP PIN D.4-4 B/80	FICHE A DETENTE D. 4-4 B/80	EINRASTSTIFT D 4-4 B/80	CLAVIJA DE MUELLE D.4-4 B/80
50	G16630460	PROTEZIONE VALVOLA R5.00	VALVE GUARD R5.00	PROTECTION SOUPAPE R5.00	VENTILSCHUTZ R5.00	PROTECIËN V+LVULA R5.00
51	G16630470	PROTEZIONE VALVOLA R6.50	VALVE GUARD R6.50	PROTECTION SOUPAPE R6.50	VENTILSCHUTZ R6.50	PROTECIËN V+LVULA R6.50
52	F01020440	VITE M 8X1,25X25 U5739 8.8 ZN	BOLT M8 X25 5739 8.8 ZN	VIS M8 X25 5739 8.8 ZN	SCHRAUBE M8 X25 5739 8.8 ZN	TORNILLO M8 X25 5739 8.8 ZN
53	F01230034	DADO M 8X1,25 D982 8	SELF LOCKING NUT M8X1,25	ECROU AUTOBL. M8X1,25	SELBSTSP.MUTT. M8X1,25	DADO AUTOBL. M8X1,25
54	G15231321	CARTER SX 7.50				
55	G22270284	ATTACCO RASCHIATERRA SP/S	SOIL SCRAPER COUPLING SP/S	FIXATION RACLEUR SP/S	KUPPLUNG ERDABSCHABER SP/S	CONEXIN RASPADOR SP/S O

TAV. 165

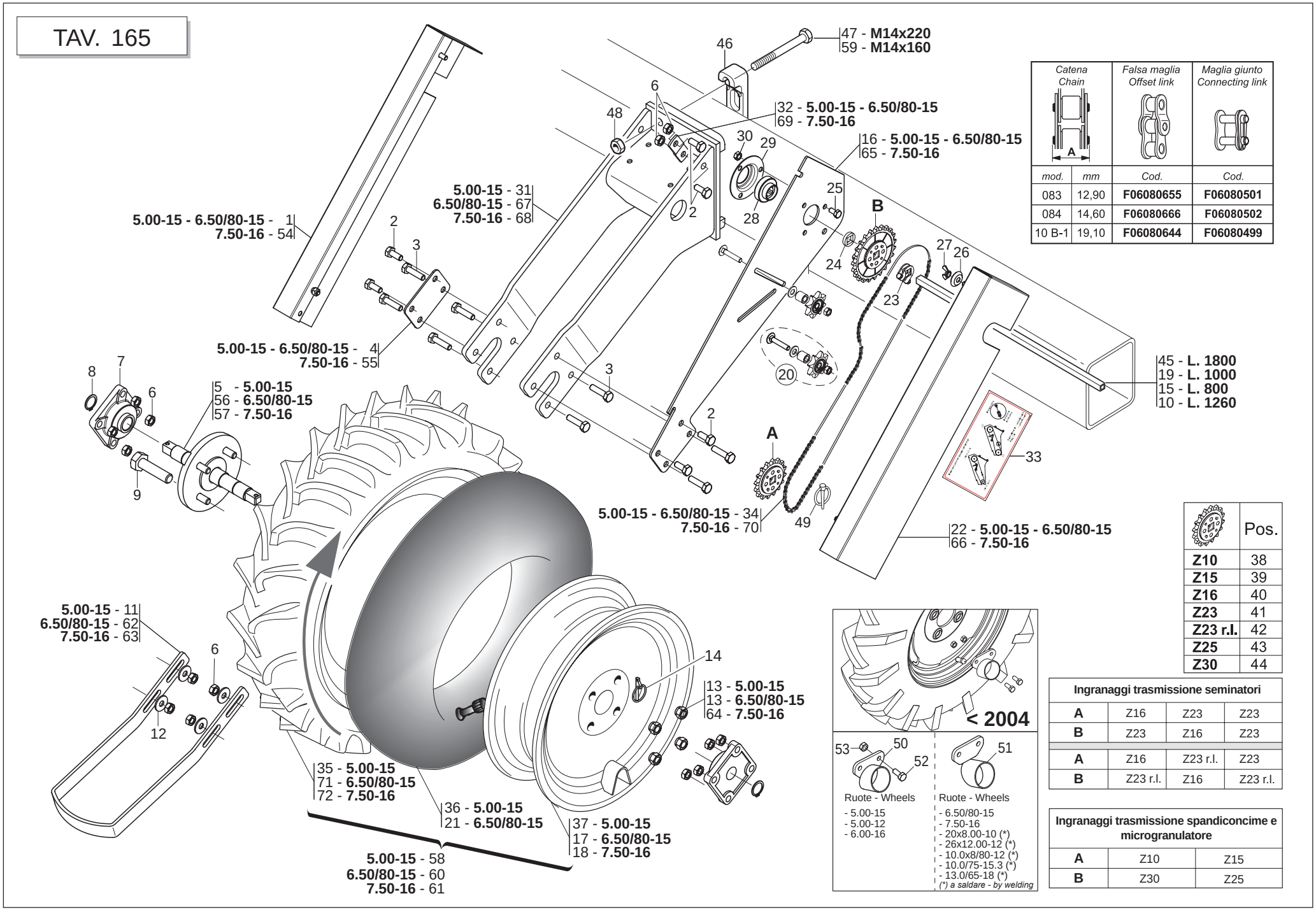

Catena Chain		Falsa maglia Offset link	Maglia giunto Connecting link
mod.	mm	Cod.	Cod.
083	12,90	**F06080655**	**F06080501**
084	14,60	**F06080666**	**F06080502**
10 B-1	19,10	**F06080644**	**F06080499**

	Pos.
Z10	38
Z15	39
Z16	40
Z23	41
Z23 r.l.	42
Z25	43
Z30	44

Ingranaggi trasmissione seminatori			
A	Z16	Z23	Z23
B	Z23	Z16	Z23
A	Z16	Z23 r.l.	Z23
B	Z23 r.l.	Z16	Z23 r.l.

Ingranaggi trasmissione spandiconcime e microgranulatore		
A	Z10	Z15
B	Z30	Z25

GASPARDO

RUOTE DI TRASMISSIONE

TAV. 165

Pos.	Cod.	Descrizione	Description	Description	Benennung	Descripcion
56	G22270281	ASSE RUOTA TRASM.MAGG. SP/S	INCREASED DRIVE WHEEL AXLE	AXE ROUE ENTRAINEMENT 6.50-15	RADACHSE sBERBEM. ANTRIEB SP/S	EJE RUEDA TRANS. SOBREDIMENS.
57	G15231161	ASSE RUOTA 7.50 X 16				
58	F06120113	RUOTA COMPL.5.00-15 6PR DX	COMPL. WHEEL 5.00-15 6PR RH.	ROUE COMPL. 5.00-15 6PR DRT.	RAD KOMPL.5.00-15 6PR RE	RUEDA COMPL.5.00-15 6PR DER.
59	F01020225	VITE M14X 2X160 U5737 8.8 BR	BOLT M 14 X160 5737 8.G	VIS M 14 X160 5737 8.G	SCHRAUBE M 14 X160 5737 8.G	TORNILLO M 14 X160 5737 8.G
60	F06120116	RUOTA 6.50/80-15 COMPL.	UPRIGHT- WIDE RUBBERED WHEEL	MONT. ROUE CAOUTCHOUT. LARG.	STZNDER BREITES GUMMIRAD	MONT.RUEDA DE GOMADA LARGA
61	F06120069	RUOTA 7.50-16 AG 10	WHEEL 7.50-16 AG10	ROUE 7.50-16 AG10	RAD 7.50-16 AG10	RUEDA 7.50-16 AG10
62	G15430660	RASCHIATERRA MAGGIORATO SP 530	INCREASED SOIL-SCRAPER SP 530	RACLEUR MAJOR. SP 530	sBERGROSSER ERDSCHABER SP 530	RASCADOR TIERRA OBREDIMENS. SP
63	G15231171	RASCHIATERRA RUOTA 7,50X16	WHEEL SOIL SCRAPER 7,50X16	RACLEUR ROUE 7,50X16	ERDSCHABER RAD 7,50X16	RASCADOR TIERRA RUEDA 7,50X16
64	F01250052	DADO COLON. 18X1,5 ZN	COLUMN NUT 18X1,5 STUD BOLT	ECROU 18X1,5 COLONNE	SCHRAUBBOLZENMUTTER 18X1,5	TUERCA 18X1,5 COLUMNA
65	G15231421	SUPPORTO TRASMISSIONE R.7.5-16	TRANSMSUPPORT 7,50X16	SUPPORT ENTRAINEMENT 7,50X16	HALTERUNG GETRIEBE 7,50X16	SOPORTE TRANSMISIN 7,50X16
66	G15231301	CARTER DX 7.50				
67	G16630300	SUPPORTO RUOTA 6,50/80-15	WHEEL SUPPORT 6,50/80-15	SUPPORT ROUE 6,50/80-15	RADLAGER 6,50/80-15	SOPORTE RUEDA 6,50/80-15
68	G15231141	SUPPORTO RUOTA 7.50	WHEEL SUPPORT 7.50	SUPPORT ROUE 7.50	RADLAGER 7.50	SOPORTE RUEDA 7.50
69	G15231330	ATTACCO AL SUPPORTO RUOTA	SUPP. WHEEL COUPLING	FIXATION SUPPORT ROUET	KUPPLUNG HALT. KL. RAD	CONEXIN SOP. RUEDECILLA
70	F06080245	CATENA 5/8 ISO 10B 94 MAGLIE				
71	F06120180	COPERTURA 6.5/80-15 IM 110 6PR	COVERING 6.5/80-15 IM 110 2PR	COUVERTURE 6.5/80-15 IM110 4PR	MANTEL .5/80-15 IM 110 2PR	CUBIERTA 6.5/80-15 IM 110 2PR
72	F06120400	COPERTURA 7.50-16 IM110 8PR TU	COVERING 7.50-16 IM110 8PR TU	COUVERTURE 7.50-16 IM110 8PR T	MANTEL 7.50-16 IM110 8PR TU	CUBIERTA 7.50-16 IM110 8PR TU

TAV. 241

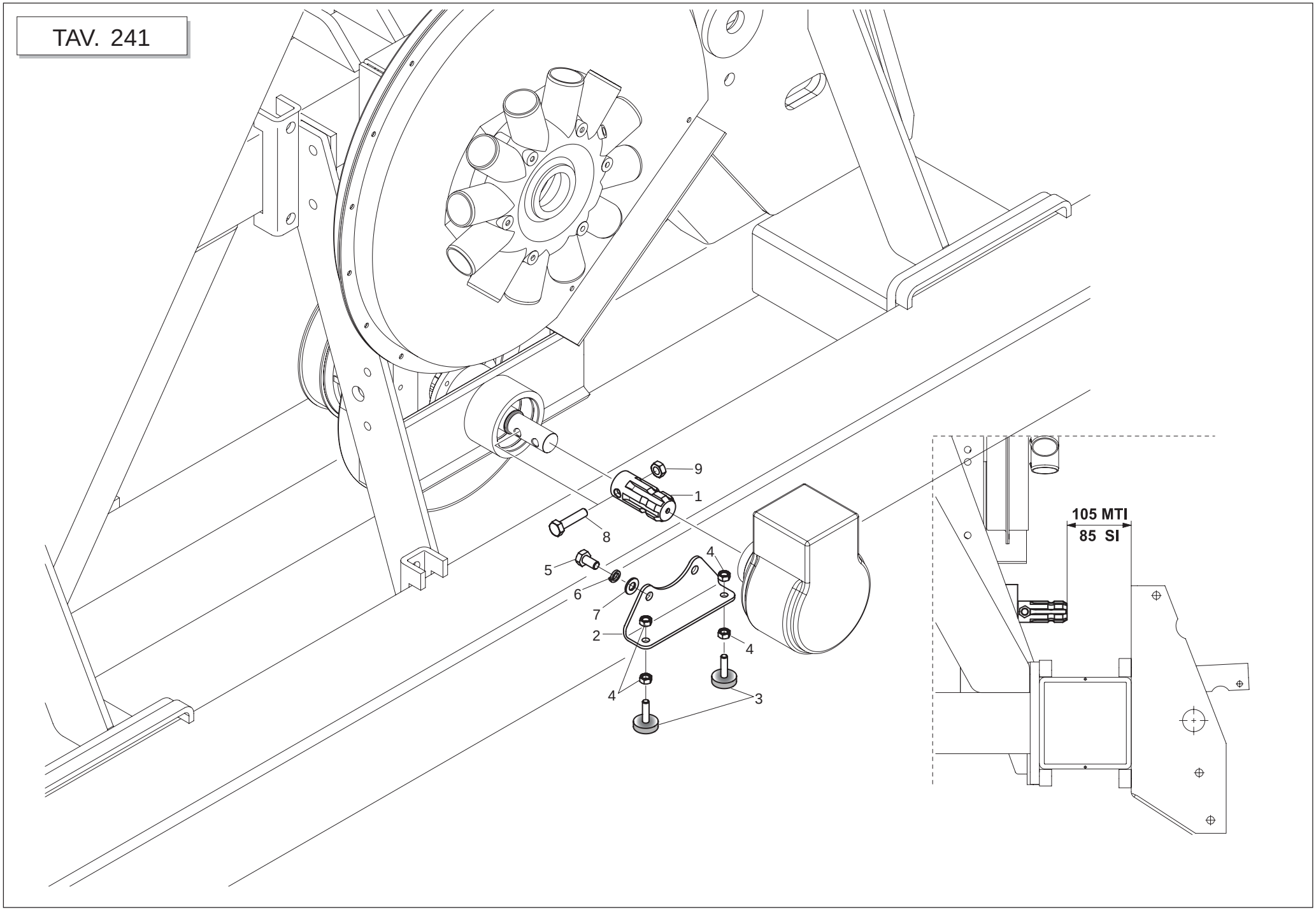

GASPARDO

PRESA DI POTENZA POSTERIORE

TAV. 241

Pos.	Cod.	Descrizione	Description	Description	Benennung	Descripcion
1	G14218970	PROLUNGA PRESA DI FORZA POST.	REAR POWER T/OFF EXTENSION	RALLONGE P.R.F. ARRIERE	VERLZNGERUNG HINTERER P.D.P.	PROLONGACIËN T.D.P. TRASERA
1	G14218960	SUPPORTO MOLTIPLICATORE	OVERGEAR SUPPORT	SUPPORT MULTIPLICATEUR	HALTERUNG _BERSETZER	SOPORTE MULTIPLICADOR
1	G16242560	PARACOLPI 30X8 M8X30	BUFFER 30X8 M8X30	PARE-CHOCS 30X8 M8X30	STOSSDZMPFER 30X8 M8X30	PARAGOLPES 30X8 M8X30
2	F01200244	DADO M 8X1,25 U5588 6.8 ZN	NUT M8	ECROU M8	MUTTER M8	DADO M8
3	F01020470	VITE M10X 1,5X20 U5739 8.8 ZN	BOLT M 10X20	VIS M 10X20	SCHRAUBE M 10X20	TORNILLO M 10X20
3	F01480220	RONDELLA D10 UNI 1751 ZN	WASHER D10 UNI 1751 ZN	RONDELLE D10 UNI 1751 ZN	UNTERLEGSCHEIBE D10 UNI 1751 Z	ARANDELA D10 UNI 1751 ZN
4	F01410064	ROS.M10 10,5X 20X 2 U6592 ZN	WASHER 10,5X21	RONDELLE 10,5X21	SCHEIBE 10,5X21	ARANDELA 10,5X21
5	F01020112	VITE M10X 1,5X45 U5737 8.8 ZN	BOLT 10X45 5737 8.G GALVANIZED	VIS 10X45 5737 8.G ZN	SCHRAUBE 10X45 5737 8.G ZN	TORNILLO 10X45 5737 8.G ZN
6	F01220033	DADO M10X 1,5 D980 8 ZN	NUT M10X 1,5 D980 8 ZB	ECRO.M10X 1,5 D980 8 ZB	MUTT.M10X 1,5 D980 8 ZB	TUER.M10X 1,5 D980 8 ZB

TAV. 284

5.00-15 / 6.50/80-15 / 7.50/16-16

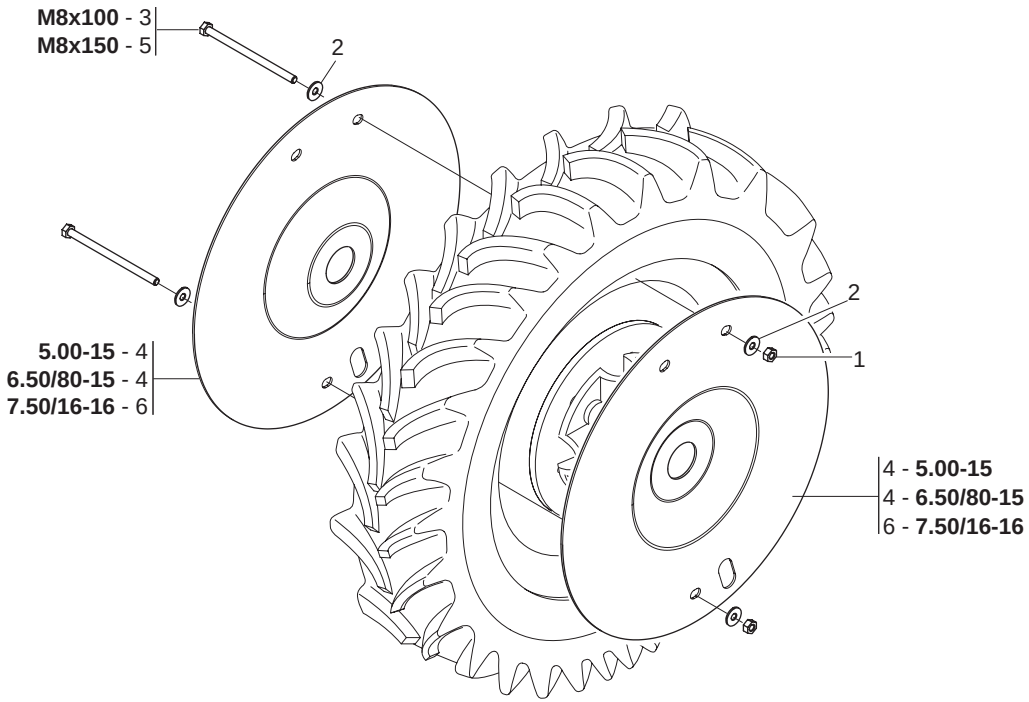

GASPARDO

KIT RUOTE PER TERRENI SASSOSI - FLANGIATURA RUOTE

TAV. 284

Pos.	Cod.	Descrizione	Description	Description	Benennung	Descripcion
1	F01220022	DADO M 8X1,25 D980 8 ZN	SELF LOCKING NUT M8X1,25 980V	ECROU AUTOBL. M8X1,25 980-V	SELBSTSP.MUTT. M8X1,25 980-V	DADO AUTOBL. M8X1,25 980-V
2	F01420048	ROS.M8 8,4X 24X 2 U6593 ZN	PLANE WASHER D.8	RONDELLE D.8	SCHEIBE D.8	ARANDELA D.8
3	F01020090	VITE M8X1,25X100 U5737 8.8 ZN	BOLT 8 X100 5737 8.G GALVANIZ.	VIS 8 X100 5737 8.G ZN	SCHRAUBE 8 X100 5737 8.G ZN	TORNILLO 8 X100 5737 8.G ZN
4	G14830221	DISCO PROTEZIONE SASSI	DISK STONE PROTECTION	DISQUE PROTECTION SOLS GRAVELE	STEINSCHUTZ-SCHEIBE	DISCO PROTECIËN PIEDRAS
5	F01020097	VITE M8X1,25X150 U5737 8.8 ZN	SCREW 8X150 5737 8.G GALVANIZ.	VIS 8 X150 5737 8.G ZN	SCHRAUBE 8 X150 5737 8.G ZN	TORNILLO 8 X150 5737 8.G ZN
6	G15231910	DISCO PROTEZIONE SASSI R7.50				

TAV. 171

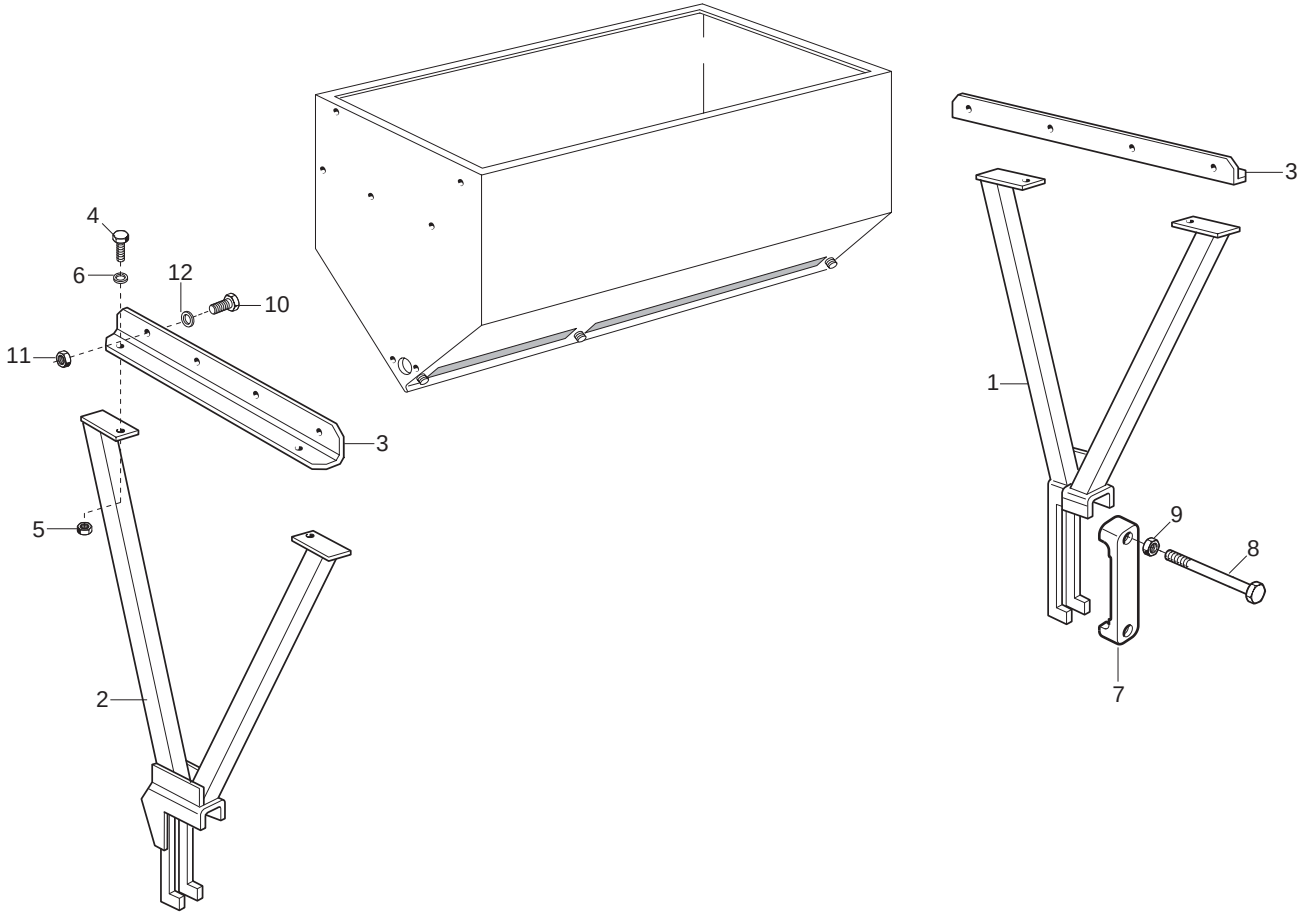

GASPARDO

SUPPORTI SERBATOI SPANDICONCIME

TAV. 171

Pos.	Cod.	Descrizione	Description	Description	Benennung	Descripcion
1	G14276051	SUPPORTO SPANDICONCIME DX	FERTILIZER SPREADER SUPPORT R.	SUPPORT +PANDEUR D'ENGRAIS DRO	HALTERUNG D_NGERSTREUER RE	SOPORTE ABONADORA DCHA
2	G14276061	SUPPORTO SPANDICONCIME SX	FERTILIZER SPREADER SUPPORT L.	SUPPORT +PANDEUR D'ENGRAIS GAU	HALTERUNG D_NGERSTREUER LI	SOPORTE ABONADORA IZQDA
3	G14276071	SUPPORTO SPANDICONCIME	FERTILIZER SPREADER SUPPORT	SUPPORT +PANDEUR D'ENGRAIS	HALTERUNG D_NGERSTREUER	SOPORTE ABONADORA
4	F01020472	VITE M10X 1,5X25 U5739 8.8 ZN	BOLT 10X25 5739 8.G GALVANIZED	VIS 10X25 5739 8.G ZN	SCHRAUBE 10X25 5739 8.G ZN	TORNILLO 10X25 5739 8.G ZN
5	F01200270	DADO M10X 1,5 U5588 6.8 ZN	NUT M10	ECROU M10	MUTTER M10	DADO M10
6	F01420060	ROS.M10 10,5X 30X2,5 U6593 ZN	WASHER 10,5X30	RONDELLE 10,5X30	SCHEIBE 10,5X30	ARANDELA 10,5X30
7	G19204030	SCONTRO FISS.150 2F D15				
8	F01020225	VITE M14X 2X160 U5737 8.8 BR	BOLT M 14 X160 5737 8.G	VIS M 14 X160 5737 8.G	SCHRAUBE M 14 X160 5737 8.G	TORNILLO M 14 X160 5737 8.G
9	F01200306	DADO M14X 2 U5588 6.8 ZN	NUT M14X2	ECROU M14X2	MUTTER M14X2	DADO M14X2
10	F01020465	VITE M10X1,5 X35 U5739 A2 IX	SCREW 10X35 5739 INOX A2	VIS 10X35 5739 INOX A2	SCHRAUBE 10X35 5739 INOX A2	TORNILLO 10X35 5739 INOX A2
11	F01200271	DADO M10X 1,5 U5588 A2 IX	NUT 10 5588 6.8 INOX	ECROU 10 5588 6.8 INOX	MUTTER 10 5588 6.8 INOX	TUERCA 10 5588 6.8 INOX
12	F01420059	ROS.M10 10,5X 30X2,5 U6593 IX	WASHER 11X30X2,5 6593 A2	RONDELLE 11X30X2,5 6593 A2	UNTERLEGSCHEIBE 11X30X2,5 6593	ARANDELA 11X30X2,5 6593 A2

TAV. 182

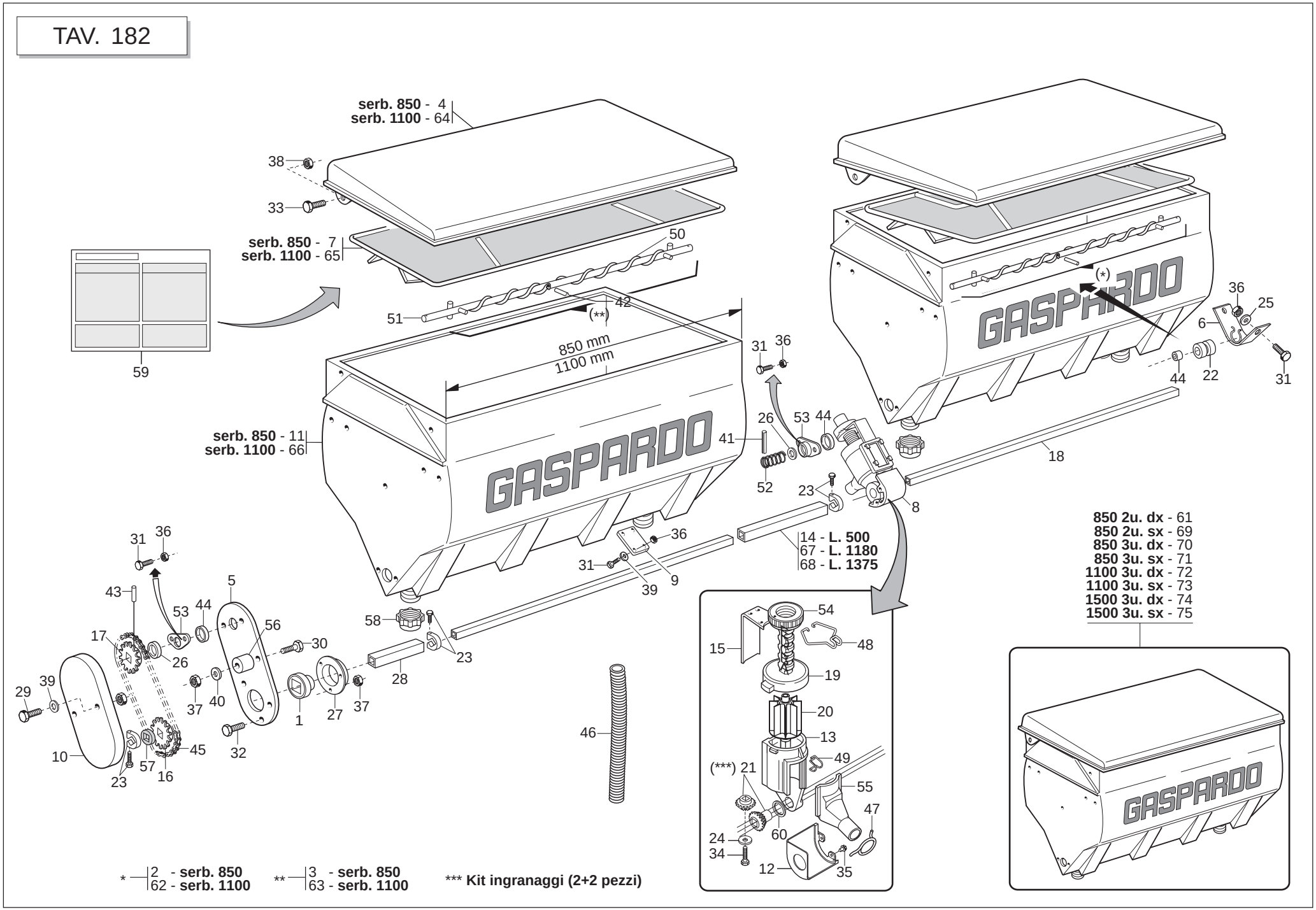

* 2 - **serb. 850**
62 - **serb. 1100**

** 3 - **serb. 850**
63 - **serb. 1100**

*** **Kit ingranaggi (2+2 pezzi)**

SERBATOI SPANDICONCIME

TAV. 182

Pos.	Cod.	Descrizione	Description	Description	Benennung	Descripcion
1	G14830390	CUSCINETTO FORO QUADRO	SQUARE-HOLED BEARING	ROULEMENT AL+SAGE CARR+	VIERKANTLAGER	COJINETE ORIFICIO CUADRADO
2	G20860121	ASSE AGITAT.DX SERB.850 COMPL.	STIRRER SPINDLE- RIGHT 850 TAN	AXE AGITATEUR DRT. RESERVOIR 8	SAMENMISCHERACHSE RE BEH.850	EJE AGITAD. DER. DEPS.850 COMA
3	G20860122	ASSE AGITAT.SX SERB.850 COMPL.	STIRRER SPINDLE- LEFT 850 TANK	AXE AGITATEUR GCH. RESERVOIR 8	SAMENMISCHERACHSE LI BEH.850	EJE AGITAD. IZQ. DEPS. 850 COA
4	G15470580	COPERCHIO SERBATOIO 850	TANK TOP 850	COUVERCLE RESERVOIR 650	BEHZLTERDECKEL 850	TAPA DEPSITO 850 A
5	G15471930	PROTEZIONE	GUARD	PROTECTION	SCHUTZ	PROTECCIN P
6	G15471990	SUPPORTO COCLEA	SCREW SUPPORT	SUPPORT VIS ALIMENTATION	HALTERUNG SCHNECKE	SOPORTE CCLEA S
7	G15472760	GRIGLIA SERBATOIO PLASTICA 850	PLASTIC TANK GRID 850	GRILLE RESERVOIR PLASTIQUE 850	BEHZLTERGITTER PLAST.850	REJILLA DEPSITO PLAST.850 G
8	G15472770	DISTR.COMPL.8PALE SPANDI PL	COMPL.PLAS.FERTIL.DISTR.8RIBS	MINIMAX COMPL 8C PLA	KOMPL.DOSIER.PLA.DÜNGERSTR.8S	DISTR.COMP.ABONO PLAST. 8AL.
9	G15472780	TAPPO SPANDI PLASTICA	PLASTIC FERT. SPREADER PLUG	BOUCHON EPAND. PLASTIQUE	PLASTIKPFROPFEN DsNGERSTR.	TAPN ABONADORA PLæSTICO D
10	G19002710	PROTEZ.RINVIO SPANDICONCIME	FERTILIZER TRANSM. PROTECTION	PROTECTION RENVOI FERTILISEUR	SCHUTZ VORGELEGE DUNGERSTREUER	PROTECCION TRANSMISION ABONADO
11	G19004470	SERBATOIO CONCIME 850	FERTILIZER HOPPER 850	TR+MIE ENGRAIS 850	D_NGERTANK 850	DEPËSITO ABONO 850
12	G19002850	PROTEZIONE PIGNONE	PINION GUARD	PROTECTION PIGNON	RITZELSCHUTZ	PROTECCIN PI¾N PR
13	G19002920	CORPO DISTRIBUTORE SPANDI PLA.	PLA. F.SPREADER DISTRIB.CASING	CORPS DISTRIBUTEUR EPAND.	VERTEILUNGSKTRPER STREUER PLA.	CUERPO DIST. ABONADORA PLæS.
14	G20860012	MANICOTTO DI UNIONE L.500	JOINT SLEEVE L.500	MANCHON DE RACCORD L. 500	VERBINDUNGSMUFFE L.500	MANGUITO DE UNIN L.500 M
15	G20860052	REGOLATORE APERTURA	OPENING REGULATOR	REGULATEUR OUVERTURE	TFFNUNGSEINSTELLER	REGULADOR ABERTURA
16	G20860086	INGRANAGGIO 1/2 Z-12 F.Q.	GEAR 1/2 Z-12 F.Q.	ENGRENAGE 1/2 Z-12 TROUS CARRE	ZAHNRAD 1/2 Z-12 F.Q.	ENGRANAJE 1/2 Z-12 F.Q.
17	G20860088	INGRANAGGIO 1/2 Z-12 F.T.	GEAR 1/2 Z-12 F.T.	ENGRENAGE 1/2 Z-12 TROUS RONDS	ZAHNRAD 1/2 Z-12 F.T.	ENGRANAJE 1/2 Z-12 F.T.
18	G20860090	ASSE SX 5F.60 L.1460	AXLE- LEFT 5-R.60 L.1460	AXE GCH. 5 RANGEES 60 L. 1460	ACHSE LI 5R.F.60 L.1460	EJE IZQ. 5 FILA. 60 L.1460
19	G20860093	VITE DI REGOL.	ADJUSTMENT BOLT	VIS DE REGLAGE	EINSTELLSCHRAUBE.	TORNILLO DE REGULACIN S
20	G20860106	DOSATORE SPANDI 8 PALE COMPL.	FERT.METERING DEVICE ASS.8 GRO	ROTOR DOSEUR 8C FERTI	DOSIERER DUNGER.KOMPL. 8 SEKT	DOSIFICADOR ABONO COMP.8 SECT
21	G20860126	KIT INGR DISTR CONCIME (2+2)	KIT- MAN. DISTR. GEARS	COUPLE CON DISTR ENGRAIS (2+2)	KIT ZAHNRZDER DsNGERSTREUER	SET ENGRANAJES DISTRIB. ABONO
22	G19005040	BOCCOLA ASSE SPANDI	FERT. SPREADER AXLE BUSH	DOUILLE AXE +PANDEUR	ACHSENBUCHSE STREUER	MANGUITO -RBOL ABONADORA
23	G22505085	FERMO ASSE IN LAMIERA	PLATE AXLE STOP	ARRET AXE EN TOLE	FESTSTELLVORRICHTUNG BLECHACHS	BLOQUEO EJE DE CHAPA
24	G20970097	RONDELLA 32X3X4,5	WASHER 32X3X4-5	RONDELLE 32X3X4-5	UNTERLEGSCHEIBE 32X3X4-5	ARANDELA 32X3X4-5
25	G20970125	RONDELLA 28X2,5X6,5	WASHER 28X2-5X6-5	RONDELLE 28X2-5X6-5	UNTERLEGSCHEIBE 28X2-5X6-5	ARANDELA 28X2-5X6-5
26	G22220073	RONDELLA 28X0,3X16,5	WASHER 28X0-3X16-5	RONDELLE 28X0-3X16-5	UNTERLEGSCHEIBE 28X0-3X16-5	ARANDELA 28X0-3X16-5
27	G22230094	SUPPORTO CUSCINETTO	BEARING SUPPORT	SUPPORT PALIER	LAGERBsCHSE	SOPORTE COJINETE
28	G22250287	MANICOTTO DISTANZIALE SV	SPACER SLEEVE SV	MANCHON ENTRETOISE SV	ABSTANDSMUFFE SV	MANGUITO DISTANCIADOR SV
29	F01020043	VITE M 6X 1X 60 U5737 8.8 ZN	BOLT 6 X60 5737 8.G GALVANIZED	VIS 6 X60 5737 8.G ZN	SCHRAUBE 6 X60 5737 8.G ZN	TORNILLO 6 X60 5737 8.G ZN
30	F01020068	VITE M 8X1,25X40 U5737 8.8 ZN				
31	F01020403	VITE M 6X 1X 16 U5739 8.8 ZN	BOLT M 6X16	VIS M 6X16	SCHRAUBE M 6X16	TORNILLO M 6X16
32	F01020432	VITE M 8X1,25X16 U5739 8.8 ZN	BOLT M 8X16	VIS M 8X16	SCHRAUBE M 8X16	TORNILLO M 8X16
33	F01020472	VITE M10X 1,5X25 U5739 8.8 ZN	BOLT 10X25 5739 8.G GALVANIZED	VIS 10X25 5739 8.G ZN	SCHRAUBE 10X25 5739 8.G ZN	TORNILLO 10X25 5739 8.G ZN
34	F01070075	VIT.A.4,2X1,41X 38 6954 4.8NI	BOLT 4-2X38 DIN 7981	VIS 4-2X38 DIN 7981	SCHRAUBE 4-2X38 DIN 7981	TORNILLO 4-2X38 DIN 7981
35	F01070011	VIT.A.4,2X1,41X 9,5 6950 4.8NI	BOLT- SELF-TAPPING 4-2X9-5T.E.	VIS AUTOTAR. 4-2X9-5 T. E. COU	SELBSTSCHNEID. SCHRAUBE 4-2X9-	TORNILLO AUTORROSC. 4-2X9-5
36	F01200232	DADO M 6X 1 U5588 6.8 ZN				
37	F01200244	DADO M 8X1,25 U5588 6.8 ZN	NUT M8	ECROU M8	MUTTER M8	DADO M8
38	F01220033	DADO M10X 1,5 D980 8 ZN	NUT M10X 1,5 D980 8 ZB	ECRO.M10X 1,5 D980 8 ZB	MUTT.M10X 1,5 D980 8 ZB	TUER.M10X 1,5 D980 8 ZB
39	F01410037	ROS.M6 6,4X12,5X1,6 U6592 ZN	PLANE WASHER D.6	RONDELLE D.6	SCHEIBE D.6	ARANDELA D.6
40	F01410051	ROS.M8 8,4X 17X1,6 U6592 ZN	PLANE WASHER D.8	RONDELLE D.8	SCHEIBE D.8	ARANDELA D.8
41	F02100079	SPINA E.P. 5X 16 U6873 C70 BR				
42	F02100089	SPINA E.P. 5X 36 U6873 C70 BR	PIN EL. 5 X36 DIN 1481	FICHE EL. 5 X36 DIN 1481	SPANNSTIFT 5 X36 DIN 1481	CLAVIJA EL.5 X36 DIN 1481
43	F02100114	SPINA E.P. 6X 30 U6873 C70 BR	ELASTIC PIN 6X30	GOUJON ELASTIQUE 6X30	SPANNHUELSE 6X30	ESPINA ELASTICA 6X30
44	F03011081	GUARNIZIONI LABBRO DE100				
45	F06080196	CATENA 1/2 ISO 083 32 MAGLIE	CUT-DOWN CHAIN .1/2 ISO 083 32	TRONCON CHAINE 1/2 ISO 083 32	KETTENLZNGE 1/2 ISO 083 32 GL	TRECHO CADENA 1/2 ISO 083 32
46	F03100500	TUBO EOLO 35 PU	EOLO PIPE 35 PU	TUBE EOLO 35 PU	ROHR EOLO 35 PU	TUBO EOLO 35 PU
47	G65336025	MOLLA SPEC.ZN STRINGIT.ASP.SP	SPEC SPRING ZN FAN . PIPE CLAM	RESSORT SPEC. ZN SERRE-TUBE AS	SPEZIALFEDER ZN RORHSCHELLE AB	MUELLE ESPEC. ZN APRIETA TUBOS
48	G65336055	MOLLA SPEC.REGOL.SPAND. SP	SPEC SPRING MAN. SPR. ADJUSTM.	RESSORT SPEC. REGL. EP. ENTRAI	SPEZIALFEDER STREUEREINSTELLUN	MUELLE ESPEC. REGUL. ABONADORA
49	G65336062	MOLLA SPEC.SCIV.DISTR.SPAND.SP	SPEC SPRING - MAN. SPR. DISTR.	RESS. SPEC. LANCOIR DISTR. EP.	SPEZ.FEDER RUTSCHE SZAPP. STRE	MUELLE ESPEC.PLANO INCL.DISTR.
50	G65336064	MOLLA SPEC.COCLEA DX SPAND.HL	SPEC. WORM SCREW SPRING RIGHT	RESSORT SPEC. VIS DRT. EP. ENG	SPEZ.FEDER RE SCHNECKE STREUER	MUELLE ESPEC. TORN.S/F DER. AB
51	G65336065	MOLLA SPEC.COCLEA SX SPAND.HL	SPEC. WORM SCREW SPRING LEFT M	RESSORT SPEC. VIS GCH. EP. ENG	SPEZ.FEDER LI SCHNECKE STREUER	MUELLE ESPEC. TORN.S/F IZQ. AB
52	G65338043	MOLLA COMP.ZN SERB. M80	ZN TANK COMP.SPRING M80	RESSORT COMPL. ZN RESERVOIR M8	DRUCKFEDER ZN BEHZLTER M80	MUELLE COMP.ZN DEPS. M80 A
53	G66248121	BOCCOLA CON FLANGIA M80	BUSHING W/ FLANGE M80	SUPPORT AVEC BRIDE M80	BsCHSE MIT FLANSCH M80	CASQUILLO CON BRIDA M80
54	G66248125	GHIERA REGOLAZIONE M80	ADJUSTMENT KNURLED NUT M80	BAGUE REGLAGE M80	EINSTELLMUTTER M80	CONTRATUERCA REGULACIN M80 G
55	G66248178	SCIVOLO DISTR.SPAND. SP	CHUTE- MANURE-SPREADER DISTRIB	LANCOIR DISTRIBUTION EP. ENGR.	DsNGERSTREUER RUTSCHE SP	PLANO INCLINADO DISTR. ABON. S

TAV. 182

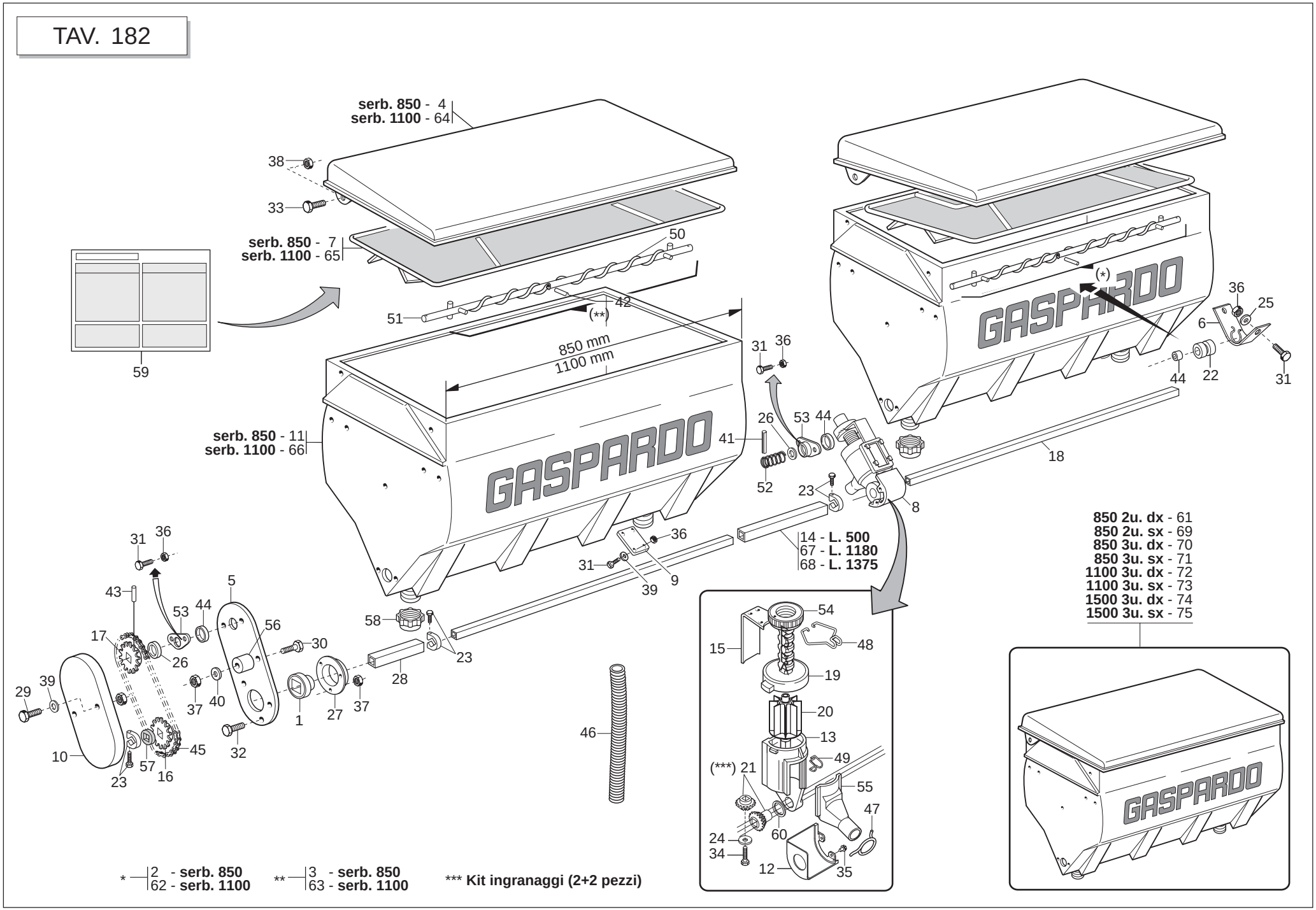

* 2 - **serb. 850**
62 - **serb. 1100**

** 3 - **serb. 850**
63 - **serb. 1100**

*** **Kit ingranaggi (2+2 pezzi)**

SERBATOI SPANDICONCIME

TAV. 182

Pos.	Cod.	Descrizione	Description	Description	Benennung	Descripcion
56	G66248207	TENDICATENA SPAND. SP-520	CHAIN TENSIONER	TENDEUR DE CHAINE EPAND. ENGR.	KETTENSPANNER DsNGERSTR. SP-52	TENSOR DE CADENA ABON. SP-520
57	G66248218	RONDELLA DISTAN.SPAND.	MAN. SPR. SPACER WASHER	RONDELLE ENTRETOISE EP. ENGRAI	ABSTANDSCHEIBE DsNGERSTREUER	ARANDELA DISTAN.ABONAD.
58	F03150757	TAPPO FILETT.SERBAT.PLASTICA	PLASTIC TANK THREADED PLUG	BOUCHON FILETE RESERV.PLAST.	GEWINDEPFROPFEN PLASTIKBEH.	TAPN ROSCADO DEPS.PLæSTICO DO
59	G19700821	TABELLA CONCIME SP540	FERTILIZER CHART STICKER	DECALC. TABLEAU DE ENGRAIS	ABZIEHB. TABELLE D_NGER	CAL.TABLA ABONO
60	G18701500	RONDELLA 29,5 X38 X0,3	WASHER 29,5 X 38 X 0,3	RONDELLE 29,5 X38 X0,3	UNTERLEGSCHEIBE 29,5X38X0,3	ARANDELA 29,5 X38 X0,3
61	G15472790	SERBATOIO 850 PLA.2U DX	PLAS.FERT.TANK 850 2 OUT. RH	RESERV 850 PLA 2S COMPL DRT	BEHZLTER 850 PLAST. RE 2 AUSG.	DEPSITO 850 PLA.2 SAL. DER. B
62	G15271540	ASSE AGITATORE DX 1100	STIRRER SPINDLE-RIGHT 1100 TAN	AXE AGITATEUR DRT.RESERV.1100	SAMENMISCHERACHSE RE BEH.1100	EJE AGITAD.DER.DEPS.1100 COM A
63	G15271550	ASSE AGITATORE SX 1100	STIRRER SPINDLE- LEFT 1100	AXE AGITATEUR GCH. 1100	SAMENMISCHERACHSE LINKER 1100	EJE AGITAD. IZQ. 1100
64	G15471920	COPERCHIO SERBATOIO L.1100	TANK COVER L.1100	COUVERCLE RESERVOIR L.1100	BEHZLTERDECKEL L.1100	TAPA DEPS.L.1100 A
65	G15473130	GRIGLIA SERBATOIO 1100 PLAST.	PLASTIC TANK GRID 1100	GRILLE RESERVOIR PLAST.1100	BEHZLTERGITTER PLAST.1100	REJILLA DEPSITO PLAST.1100 G
66	G19003060	SERBATOIO 1100 PLASTICA	PLASTIC TANK 1100	RESERVOIR 1100 PLASTIQUE	PLASTIKBEHZLTER 1100	DEPSITO 1100 PLæSTICA B
67	G20910045	MANICOTTO UNIONE L.1180	JOINT SLEEVE L.1180	MANCHON RACCORD L. 1180	VERBINDUNGSMUFFE L.1180	MANGUITO DE UNIN L.1180 M
68	G20910044	MANICOTTO UNIONE L.1375	JOINT SLEEVE L.1375	MANCHON RACCORD L. 1375	VERBINDUNGSMUFFE L.1375	MANGUITO DE UNIN L.1375 M
69	G15472800	SERBATOIO 850 PLA.2U SX	PLAS.FERT.TANK 850 2 OUT. L	RESERV 850 PLA 2S COMPL GCH	BEHZLTER 850 PLAST. LI 2 AUSG.	DEPSITO 850 PLA.2 SAL. IZQ. B
70	G15472810	SERBATOIO 850 PLA.3U DX	PLAS.FERT.TANK 850 3 OUT. RH	RESERV 850 PLA 3S COMPL DRT	BEHZLTER 850 PLAST. RE 3 AUSG.	DEPSITO 850 PLA.3 SAL. DER. B
71	G15472820	SERBATOIO 850 PLA.3U SX	PLAS.FERT.TANK 850 3 OUT. LH	RESERV 850 PLA 3S COMPL GCH	BEHZLTER 850 PLAST. LI 3 AUSG.	DEPSITO 850 PLA.3 SAL. IZQ. B
72	G15272680	SERBATOIO 1100 3U.DX PLA.COMP.	TANK ASSY.1100 RIGHT 3U	RESERV 1100 PLA 3S COMPL DRT	KOMPL. BEHZLTER 1100 RE 3AUSG	DEPS. COMPL.1100 DER. 3 SAL. B
73	G15272720	SERBATOIO 1100 3U.SX PLA.COMP.	TANK ASSY. 1100 LEFT 3U	RESERV 1100 PLA 3S COMPL GCH	KOMPL. BEHZLTER 1100 LI 3AUSG	DEPS. COMPL.1100 IZQ. 3 SAL. B
74	G15471430	SERBATOIO 1500 3U DX	TANK ASSY.1500 LEFT 3U	RESERV 1500 FER 3S COMPL DRT	KOMPL. BEHZLTER 500 LI 3U	DEPS. COMPL.500 IZQ. 3 SAL. B
75	G15471440	SERBATOIO 1500 3U SX	TANK ASSY.1500 LEFT 3U	RESERV 1500 FER 3S COMPL DRT	KOMPL. BEHZLTER 1500 LI 3U	DEPS. COMPL.1500 IZQ. 3 SAL. B

TAV. 195

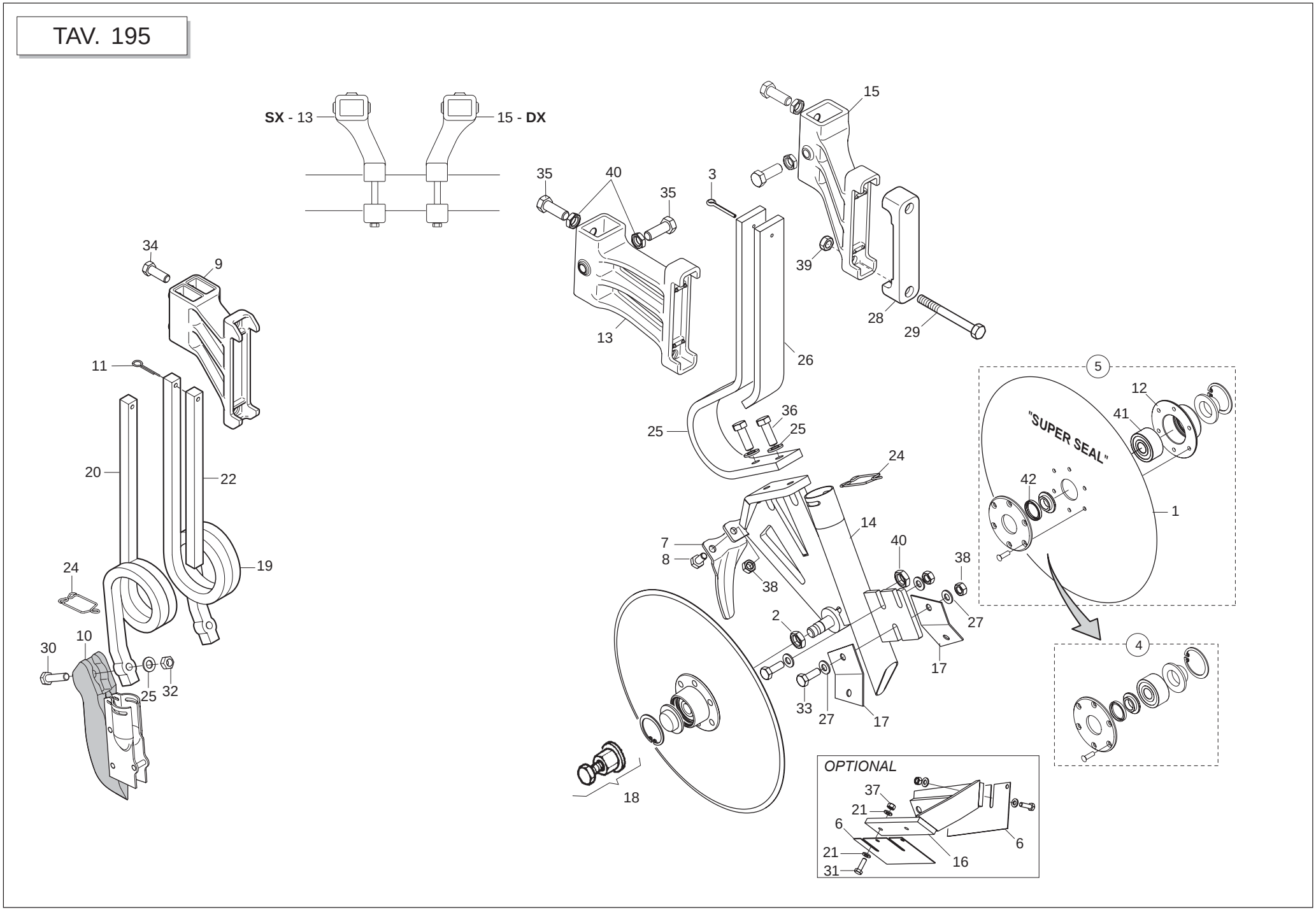

GASPARDO

ELEMENTI DI CONCIMAZIONE

TAV. 195

Pos.	Cod.	Descrizione	Description	Description	Benennung	Descripcion
1	G13825091	DISCO ASSOLCATORE D.373	FURROW OPENER DISK D.373	DISQUE D. 373 6 T.D.6	SCHEIBE SZSCHARENREISSER D.373	DISCO SURCADOR D.373
2	G15220540	DADO M16X1,5 SX	NUT M16X1-5 LEFT	ECROU M16X1-5 GCH	MUTTER M16X1-5 LI	TUERCA M16X1-5 IZQ
3	F02200228	COPIGLIA 5X 35 U1336 ZN	SPLIT PIN 5 X35 1336 GALVAN.	GOUPILLE 5 X35 1336 ZN	SPLINT 5 X35 1336 ZN	PASADOR 5 X35 1336 ZN
4	G15226600	KIT X DISCO SUPER SEAL				
5	G15225500	DISCO ASSOLC.PROTETTO COMPL.	COMPL. PROTECTED DISC COULTER	DISQUE DU SOC PROT+G+ COMPLET	GESCH_TZTE FURCHENFORMSCHEIBE	DISCO SURC.PROTEGIDO COMPL.
6	G15422231	RASCHIATERRA DISCO				
7	G15225860	PROTEZIONE DISCHI	DISC PROTECTION	PROTECTION DISQUE	DISCSCHUTZ	PROTECCIN DISCO
8	F01020470	VITE M10X 1,5X20 U5739 8.8 ZN	BOLT M 10X20	VIS M 10X20	SCHRAUBE M 10X20	TORNILLO M 10X20
9	G19203920	SUPP.MOLLA QUADRA DOPPIA POS.				
10	G16670600	FALCIONE ELEM.CONCIMAZ.QUADRA	BASIC SQUARE FERTILIZATION COU	SOC +LEM. FERTILIS. RESSORT CA	S-SCHAR ELEM.D_NGUNG QUADR.FED	BOTA ELEM.ABONAD.MUELLE CUADRA
11	F02200229	COPIGLIA 5X 45 U1336 ZN	SPLIT PIN 5 X45 1336 GALVAN.	GOUPILLE 5 X45 1336 ZN	SPLINT 5 X45 1336 ZN	PASADOR 5 X45 1336 ZN
12	G15223651	SUPPORTO CUSCINETTO DISCO	DISK BEARING SUPPORT	SUPPORT PALIER DISQUE	SCHEIBENLAGERBsCHSE	SOPORTE COJINETE DISCO
13	G19204130	SUPP.SX MOLLA PIATTA				
14	G15472111	SUPPORTO DISCHI CONCIMAZIONE				
15	G19204120	SUPP.DX MOLLA PIATTA				
16	G15472290	SUPPORTO RASCHIAT.DISCHI CONC.	MANURE DISKS SOIL SCRAPER SUPP	SUPP. RACLEUR DISQUES FUMAGE	HALTER. ERDSCHABER DsNGUNGSSCH	SOPORTE RASCADOR DISCOS ABONO
17	G15472301	RASCHIATERRA INTERNO				
18	G15225240	ESTRATTORE DISCHI ELEMENTO MT	SEED PLATE EXTRACTOR ELEM. MT	EXTRACTEUR DISQUE ELEMENT MT	SCHEIBENAUSZIEHER ELEMENT MT	EXTRACTOR DISCOS ELEMENTO MT
19	G18902770	MOLLA CONCIMAZIONE 20X20 DX	RIGHT MANURING SPRING 20X20	RESSORT FUMAGE 20X20 DRT	FEDER DsNGUNG 20X20 RE	MUELLE ABONO 20X20 DER
20	G18902780	MOLLA CONCIMAZIONE 20X20 SX	LEFT MANURING SPRING 20X20	RESSORT FUMAGE 20X20 GCH	FEDER DsNGUNG 20X20 LI	MUELLE ABONO 20X20 IZQ
21	F01420036	ROS.M6 6,4X 18X 2 U6593 ZN	FLAT WASHER 6-6X 18X2 6593 ZN	ROND. PLATE 6-6X 18X2 6593 ZN	SCHEIBE 6-6X 18X2 6593 ZN	ARAND. PLANA 6-6X 18X2 6593 ZN
22	G18903200	FERMO SPIRALE	SPIRAL STOP	ARRET SPIRALE	FESTSTELLVORRICHTUNG SPIRALE	BLOQUEO ESPIRAL
23	G18903210	MOLLA CONCIM.FILE DISPARI	ODD NUMBER ROW MANUR.SPRING	RESS. FUMAGE RANGEES IMPAIRES	FEDER DsNGUNG UNGERADE REIHEN	MUELLE ABONO FILAS IMPARES
24	G18903911	MOLLA FERMO TUBO D.35	PIPE LOCK SPRING D.35	RESSORT ARR-T TUBE D.35	ROHRSPERRFEDER D.35	MUELLE TOPE TUBO D. 35
25	F01410076	ROS.M12 13X 24X2,5 U6592 ZN	PLANE WASHER D12 UNI 6592 ZN	RONDELLE D12 UNI 6592 ZN	SCHEIBE D12 UNI 6592 ZN	ARANDELA D12 UNI 6592 ZN
26	G18903460	MOLLA RINFORZO CONCIMAZIONE	FERT. REINFOR. SPRING	RESSORT RENFORT FUMAGE	VERST.FEDER DsNGER.	MUELLE REF. ABONO
27	F01410064	ROS.M10 10,5X 20X 2 U6592 ZN	WASHER 10,5X21	RONDELLE 10,5X21	SCHEIBE 10,5X21	ARANDELA 10,5X21
28	G19204030	SCONTRO FISS.150 2F D15				
29	F01020236	VITE M14X 2X220 U5737 8.8 BR	SCREW M14X2X220 U5737 8.8 BR	VIS M14X2X220 U5737 8.8 BR	SCHRAUBE M14X2X220 U5737 8.8	TORNILLO M14X2X220 U5737 8.8
30	F01020156	VITE M12X1,75X50 U5737 8.8 ZN	BOLT12X50 5737 8.G GALVANIZED	VIS 12X50 5737 8.G ZN	SCHRAUBE 12X50 5737 8.G ZN	TORNILLO 12X50 5737 8.G ZN
31	F01020403	VITE M 6X 1X 16 U5739 8.8 ZN	BOLT M 6X16	VIS M 6X16	SCHRAUBE M 6X16	TORNILLO M 6X16
32	F01220048	DADO M12X1,75 D980 8 ZN	SELF LOCKING NUT M12X1,75 980V	ECROU AUTOBL. M12X1,75 980-V	SIEHE 00553312	DADO AUTOBL. M12X1,75 980-V
33	F01020476	VITE M10X 1,5X30 U5739 8.8 ZN	BOLT M 10X30	VIS M 10X30	SCHRAUBE M 10X30	TORNILLO M 10X30
34	F01020506	VITE M12X1,75X20 U5739 8.8 ZN	BOLT M 12X20	VIS M 12X20	SCHRAUBE M 12X20	TORNILLO M 12X20
35	F01020568	VITE M16X 2X45 U5739 8.8 ZN	BOLT M 16X 2X45 U5739 8.8 ZG	VIS M 16X 2X45 U5739 8.8 ZG	SCHRAUBE M 16X 2X45 U5739 8.8	TORNILLO M16X 2X45 U5739 8.8
36	F01020514	VITE M12X1,75X40 U5739 8.8 ZN	BOLT M12X1,75X40	VIS M12X1,75X40	SCHRAUBE M12X1,75X40	TORNILLO M12X1,75X40
37	F01200232	DADO M 6X 1 U5588 6.8 ZN				
38	F01200270	DADO M10X 1,5 U5588 6.8 ZN	NUT M10	ECROU M10	MUTTER M10	DADO M10
39	F01200306	DADO M14X 2 U5588 6.8 ZN	NUT M14X2	ECROU M14X2	MUTTER M14X2	DADO M14X2
40	F01200442	DADO M16X 1,5 U5589 6.8 ZN	NUT 16X1-5 UNI 5589 6.8 GALVAN	ECROU 16X1-5 UNI 5589 6.8 ZN	MUTTER 16X1-5 UNI 5589 6.8 ZN	TUERCA 16X1-5 UNI 5589 6.8 ZN
41	F04010084	CUSC.D17D47 B22,2 3303 LLU/DDU	BEARING 3303 2RS	PALIER 3303 2RS	LAGER 3303 2RS	COJINETE 3303 2RS
42	F03011075	AN. TENUTA B1OF 24X32X4	SEALING RING G24X32X4	BAGUE D'ETANCHEITE G24X32X4	DICHTRING G24X32X4	ANILLO AISLADOR G24X32X4

TAV. 233

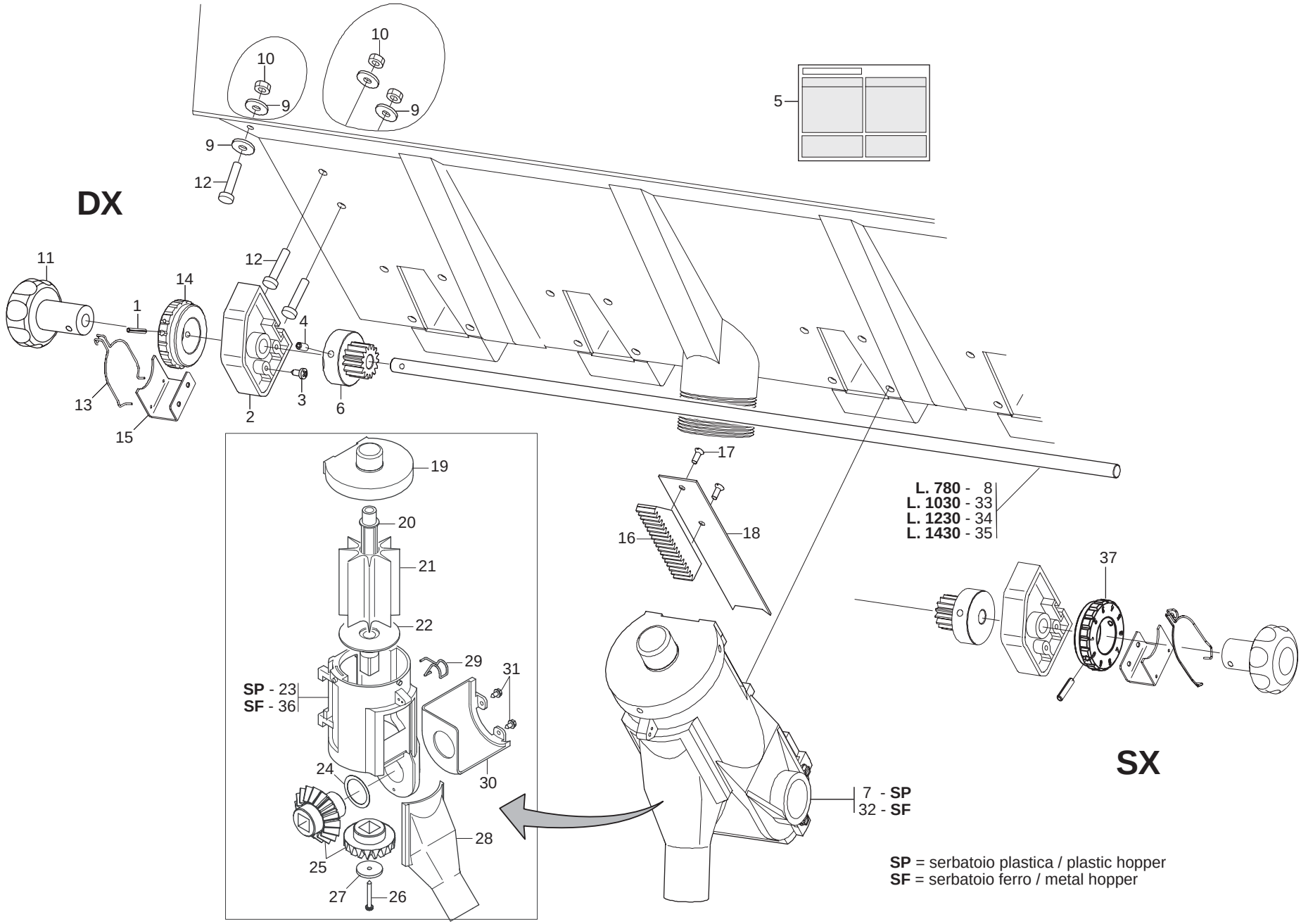

GASPARDO

SPEEDY SET

TAV. 233

Pos.	Cod.	Descrizione	Description	Description	Benennung	Descripcion
1	F02100066	SPINA E.P. 4X 36 U6873 C70 BR				
2	G19003660	SUPPORTO	SUPPORT	SUPPORT	HALTERUNG	SOPORTE
3	F01070061	VIT.A.3,9X1,34X 9,5 6954 4.8NI				
4	F01050083	VIT.M 5X 0,8X 12 U5927 A2 IX				
5	G19702951	DECAL.TAB.DISTRIB.SPEEDY-SET	SPEEDY-SET DISTRIB. CHART STI	DECALC.TABLEAU DISTRIB. SPE.-S	ABZIEHB. TAB.APPARAT SPEEDY-SE	CAL.TABLA DISTRIB. SPEEDY-SET
6	G19003680	INGRANAGGIO Z.15	GEAR Z 15	ENGRENAGE Z 15	ZAHNRAD Z 15	ENGRANAJE Z 15
7	G16670040	DISTR.COMPL.8PALE SPEEDY SET P	COMPL.PLA.SPEEDY SET DISTR.8R	MINIMAX COMPL 8C PLA SPEEDYSET	KOMPL.DOSIER.SPEEDY SET PLA.8S	DISTR.COMP.SPEEDY SET PLA.8AL.
8	G16670320	TONDO D.10X780	D.10X780 ROUND	ROND D.10X780	RUNDEISEN D.10X780	BARRA REDONDA D. 10X780
9	F01420038	ROS.M6 6,4X 18X 2 U6593 IX	WASHER M6 6,4X18X2 U6593 IX	RONDELLE M6 6,4X18X2 U6593 IX	SCHEIBE M6 6,4X18X2 U6593 IX	ARANDELA M6 6,4X18X2 U6593 IX
10	F01200233	DADO M 6X 1 U5588 A2 IX	NUT M 6X 1 U5588 IX	ECROU M 6X 1 U5588 I	MUTTER M 6X 1 U5588	TUERCA M 6X 1 U5588
11	G19003670	MANOPOLA SPEEDY SET	SPEEDY HANDLE SET	POIGN+E SPEEDY SET	GRIFF SPEEDY SET	EMPUĐADURA SPEEDY SET
12	F01020419	VITE M 6X1 X 16 U5739 A2 IX	BOLT M6 X1 X 16 U5739 8.8 IX	VIS M6 X1 X 16 U5739 8.8 IX	SCHRAUBE M6 X1 X 16 U5739 8.	TORNIL. M6 X1 X 16 U5739 8.8
13	G65336055	MOLLA SPEC.REGOL.SPAND. SP	SPEC SPRING MAN. SPR. ADJUSTM.	RESSORT SPEC. REGL. EP. ENTRAI	SPEZIALFEDER STREUEREINSTELLUN	MUELLE ESPEC. REGUL. ABONADORA
14	G19003720	GHIERA REGOLAZIONE SX	LEFT ADJUSTMENT KNURLED NUT	MANCHON DE REGLAGE GCH	EINSTELLMUTTER LINKS	ROSCA REGULACION IZQUIERDA
15	G16670140	SUPPORTO MOLLA REGOLATORE	REGULATOR SPRING SUPPORT	SUPPORT RESSORT R+GULATEUR	HALTERUNG EINSTELLFEDER	SOPORTE MUELLE REGULADOR
16	G19003690	CREMAGLIERA	RACK	CR+MAILL+RE	ZAHNSTANGE	CREMALLERA
17	F01080032	VITE M 4X 0,7X10 U7688 A2 IX	SCREW M4X 0,7X10 U7688 A2 IX	VIS M4X 0,7X10 U7688 A2 IX	SCHRAUBE M4X 0,7X10 7688 A2 IX	TORNILLO M4X0.7X10 U7688 A2 IX
18	G16670100	REGOLATORE APERTURA	OPENING REGULATOR	REGULATEUR OUVERTURE	TFFNUNGSEINSTELLER	REGULADOR ABERTURA
19	G19003700	COPERCHIO SPEEDY SET	COVER SPEEDY SET	COUVERCLE SPEEDY SET	DECKEL SPEEDY SET	TAPA SPEEDY SET
20	G66248173	ASSE DISTR.SPAND. SP	MANURE SPREADER DISTR. SPINDLE	AXE DISTRIBUTEUR EP.ENGRAIS SP	ACHSE SZAPPARAT STREUER SP	EJE DISTR. ABON. SP
21	G66248172	DOSATORE DISTR.SPAND. SP	MAN.SPR. SEED METERING DEVICE	DOSEUR DISTRIBUTEUR EP. ENGRAI	DOSIERER DsNGERSTREUER. SP	DOSIFICADOR DISTR.ABON. SP
22	G66248211	PERNO RONDELLA FUSA SPAND. SP	MAN. SPR. CAST WASHER PIN. SP	PIVOT RONDELLE MOULEE EP. ENGR	ZAPFEN LOSE UNTERLEGSCHEIBE ST	PERNO ARANDELA FUNDIDA ABONAD
23	G19002920	CORPO DISTRIBUTORE SPANDI PLA.	PLA. F.SPREADER DISTRIB.CASING	CORPS DISTRIBUTEUR EPAND.	VERTEILUNGSKTRPER STREUER PLA.	CUERPO DIST. ABONADORA PLæS.
24	G18701500	RONDELLA 29,5 X38 X0,3	WASHER 29,5 X 38 X 0,3	RONDELLE 29,5 X38 X0,3	UNTERLEGSCHEIBE 29,5X38X0,3	ARANDELA 29,5 X38 X0,3
25	G20860126	KIT INGR DISTR CONCIME (2+2)	KIT- MAN. DISTR. GEARS	COUPLE CON DISTR ENGRAIS (2+2)	KIT ZAHNRZDER DsNGERSTREUER	SET ENGRANAJES DISTRIB. ABONO
26	F01070075	VIT.A.4,2X1,41X 38 6954 4.8NI	BOLT 4-2X38 DIN 7981	VIS 4-2X38 DIN 7981	SCHRAUBE 4-2X38 DIN 7981	TORNILLO 4-2X38 DIN 7981
27	G20970097	RONDELLA 32X3X4,5	WASHER 32X3X4-5	RONDELLE 32X3X4-5	UNTERLEGSCHEIBE 32X3X4-5	ARANDELA 32X3X4-5
28	G66248178	SCIVOLO DISTR.SPAND. SP	CHUTE- MANURE-SPREADER DISTRIB	LANCOIR DISTRIBUTION EP. ENGR.	DsNGERSTREUER RUTSCHE SP	PLANO INCLINADO DISTR. ABON. S
29	G65336062	MOLLA SPEC.SCIV.DISTR.SPAND.SP	SPEC SPRING - MAN. SPR. DISTR.	RESS. SPEC. LANCOIR DISTR. EP.	SPEZ.FEDER RUTSCHE SZAPP. STRE	MUELLE ESPEC.PLANO INCL.DISTR.
30	G19002850	PROTEZIONE PIGNONE	PINION GUARD	PROTECTION PIGNON	RITZELSCHUTZ	PROTECCIN PI¾N PR
31	F01070011	VIT.A.4,2X1,41X 9,5 6950 4.8NI	BOLT- SELF-TAPPING 4-2X9-5T.E.	VIS AUTOTAR. 4-2X9-5 T. E. COU	SELBSTSCHNEID. SCHRAUBE 4-2X9-	TORNILLO AUTORROSC. 4-2X9-5
32	G13722330	DISTR.COMPL.8PALE SPEEDY SET F	COMPL.SPEEDY 8-BLADE DISTR. SE	DISTR.COMPL.8PALETTES SPEEDY S	SAATGUTAUS.8SCH.KOMPL.SPEEDY S	DISTR.COMPL.8PALETAS SPEEDY SE
33	G16670330	TONDO D.10X1030	D.10X1030 ROUND	ROND D.10X1030	RUNDEISEN D.10X1030	BARRA REDONDA D. 10X1030
34	G16670340	TONDO D.10X1230	D.10X1230 ROUND	ROND D.10X1230	RUNDEISEN D.10X1230	BARRA REDONDA D. 10X1230
35	G16670350	TONDO D.10X1430	D.10X1430 ROUND	ROND D.10X1430	RUNDEISEN D.10X1430	BARRA REDONDA D. 10X1430
36	G66248176	CORPO DISTR.SPAND. SP	MANURE SPREADER DISTR. CASING	CORPS DISTRIB. EP. ENGRAIS SP	VERTEILUNGSKTRPER STREUER SP	CUERPO DISTR. ABON. SP
37	G19003710	GHIERA REGOLAZIONE DX	RIGHT ADJUSTMENT KNURLED	BAGUE REGLAGE DROITE	EINSTELLMUTTER RE	CONTRATUERCA REGULACIN DER.

TAV. 205

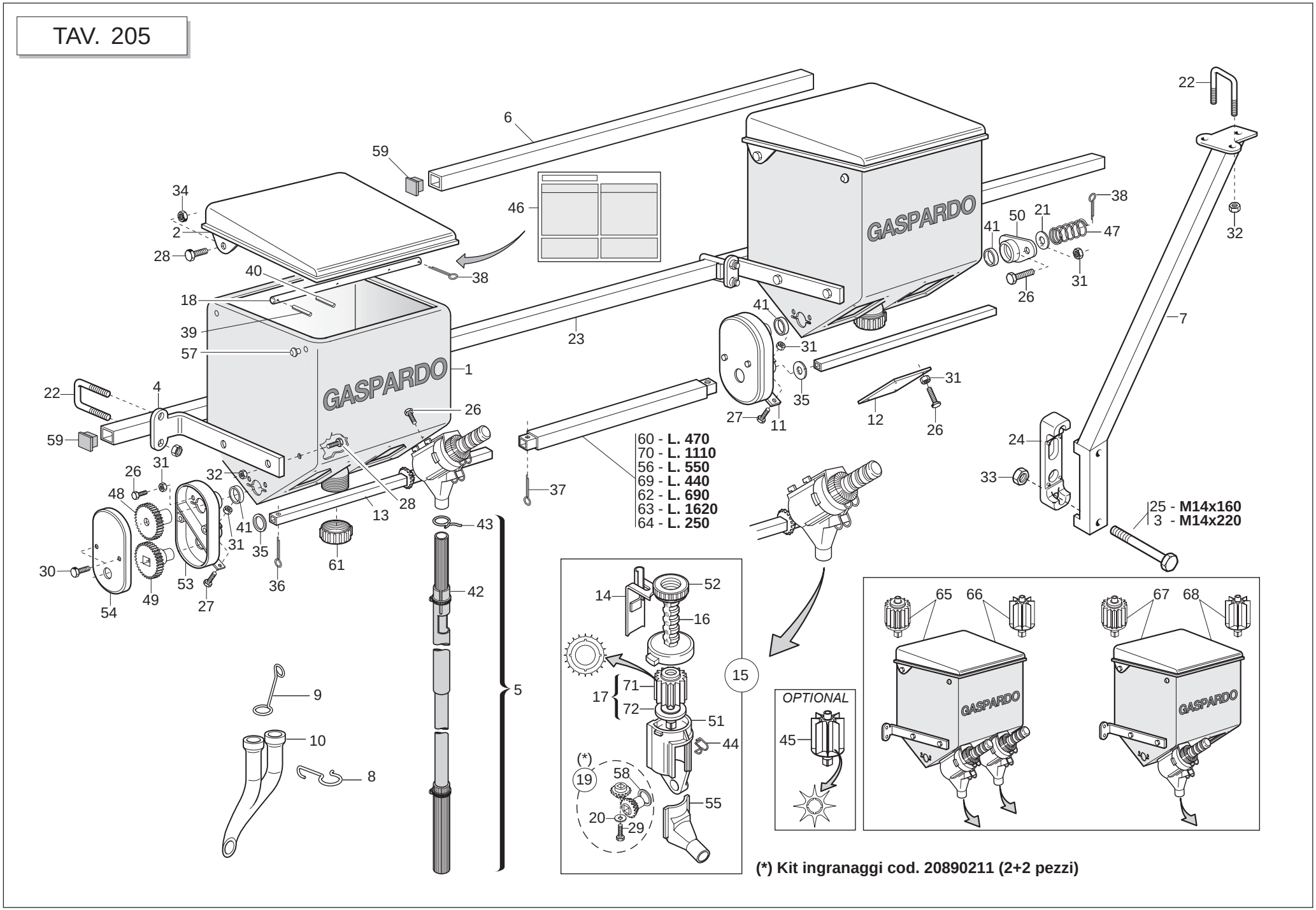
GASPARDO
60 - L. 470
70 - L. 1110
56 - L. 550
69 - L. 440
62 - L. 690
63 - L. 1620
64 - L. 250
25 - M14x160
3 - M14x220
OPTIONAL
(*) Kit ingranaggi cod. 20890211 (2+2 pezzi)

MICROGRANULATORE

TAV. 205

Pos.	Cod.	Descrizione	Description	Description	Benennung	Descripcion
1	G19002932	SERBATOIO MICRO 250 PLA.	PLASTIC TANK MICRO 250	RESERVOIR MICRO 250 PLASTIQUE	MIKROGRANULATBEHZLTER PLAST.	DEPSITO MICRO 250 PLAST.
2	G15475231	COPERCHIO MICRO 250 PLA.	PLASTIC COVER MICRO 250	COUVERCLE MICRO 250 PLASTIQUE	MIKRO DECKEL 250 PLAST.	TAPA MICRO 250 PLAST.
3	F01020236	VITE M14X 2X220 U5737 8.8 BR	SCREW M14X2X220 U5737 8.8 BR	VIS M14X2X220 U5737 8.8 BR	SCHRAUBE M14X2X220 U5737 8.8	TORNILLO M14X2X220 U5737 8.8
4	G15475271	SUPPORTO MICRO	MICRO SUPPORT	SUPPORT MICROGRANULATEUR	HALTERUNG MICRO	SOPORTE MICRO
5	G15475331	TUBO DISCESA MICRO SP	PIPE- MICRO DESCENT SP	TUBE DESCENTE MICRO SP	SENKROHR MIKRO SP	TUBO DESCENSO MICRO SP
6	G15475300	TUBO SUPPORTO MICRO L.1170	MICRO SUPPORT PIPE L.1170	TUBE SUPPORT MICRO L1170	ROHR HALTERUNG MIKRO L.1170	TUBO SOPORTE MICRO L1170
7	G15475411	SUPP.BARRA MICRO M.S.SPAN.	M.S. FERTILISER SPREADER MICRO	SUPPORT BARRE MICRO M.S. EPAND	MIKRO SPINDELHALTERUNG M.S. Ds	SOPORTE BARRA MICRO M.S. ABONA
8	G18903180	MOLLA CONVOGLIATORE MICRO	MICRO CONVEYOR SPRING	RESSORT CONVOYEUR MICRO	FEDER MIKRO FTRDERER	MUELLE CONDUCTOR MICRO
9	G18903191	MOLLA SPEC.ZN DISCESA MICRO	SPEC.SPRING ZN MICRO GUIDE	RESSORT SPEC. ZN GUIDE MICRO	SPEZIALFEDER ZN F_HR.MIKRO	MUELLE ESPEC. ZN GUA MICRO
10	G19002580	RACCORDO FINALE CONCIMAZ.PNEUM	PNEUMAT. MAN. SPR. END UNION	RACCORD FINAL FUMAGE PNEUMAT.	ENDANSCHLUSS PNEUM. DsNGUNG	UNIN FINAL DE ABONAD. NEUMAT.R
11	G20890078	PIASTRA DI COLLEGAMENTO	CONNECTION PLATE	PLAQUE DE RACCORD	VERBINDUNGSPLATTE	PLACA DE CONEXIN P
12	G20890079	PIASTRA DI CHIUSURA	CLOSURE PLATE	PLAQUE DE FERMETURE	ABSCHLUSSPLATTE	PLACA DE CIERRE
13	G20890081	ASSE DISTRIB.MICRO L.445	MICRO DISTR. SPINDLE- L. 445	AXE DISTRIBUTEUR MICRO L. 445	MIKRO STREUERACHSE L 445	EJE DISTRIB.MICRO L.445
14	G20890089	REGOLATORE DI APERTURA	OPENING REGULATOR	REGULATEUR D'OUVERTURE	TFFNUNGSEINSTELLER	REGULADOR DE ABERTURA
15	G20890135	DISTRIB.NYLON COMPL.E SCIVOLO	DISTRIB. NYLON ASSY. AND CHUTE	MINIMAX COMPL 20C MICRO	SZAPPARAT NYLON KOMPL. UND RUT	DISTRIB.NYLON COMPL.Y PLANO IN
16	G20890151	VITE-SCALA GRADUATA	GRADUATED SCALE BOLT	VIS-ECHELLE GRADUEE	SCHRAUBE - GRADSKALA	TORNILLO - ESCALA GRADUADA
17	G20890158	DOSATORE MICRO COMPL.	ROTOR DIST. MICRO 20 GROOVES	ROTOR DOSEUR 20C MICRO	DOSIERER MIKRO KOMPL. 20 SEKT	DOSIFICADOR MICRO COMPL.20 SEC
18	G20890194	ASSE AGITATORE SERB.MICRO 250	STIRRER SPINDLE- MICRO TANK 25	AXE AGITATEUR RESERVOIR MICRO	SAMENMISCHERACHSE BEH.MIKRO 25	EJE AGITADOR DEPS. MICRO 250 A
19	G20890211	KIT INGRANAGGI DISTRIB.MICRO	KIT- MICRO. DISTR. GEARS	COUPLE CON DISTR MICRO (2+2)	KIT ZAHNRZDER MIKROSTREUER	SET ENGRANAJES DISTRIB.MICRO
20	F01420011	ROS.M4 4,3X 16X 1 U6593 ZN	FLAT WASHER 4-3X 16X1-5 6593 G	ROND.PLATE 4-3X 16X1-5 6593 ZN	SCHEIBE 4-3X 16X1-5 6593 ZN	ARAND. PLANA 4-3X 16X1-5 6593
21	G22220073	RONDELLA 28X0,3X16,5	WASHER 28X0-3X16-5	RONDELLE 28X0-3X16-5	UNTERLEGSCHEIBE 28X0-3X16-5	ARANDELA 28X0-3X16-5
22	F20110706	CAV.Q.M10X 1,5X 30 47X 60 ZN	DISK SUPPORT.ELEMENT U BOLT SV	CAVALIER SUPPORT DISQUE SV	VERBINDUNG SCHEIBENHALTERUNG S	PERNO EN U SOP. DISCO SV
23	G15475130	TUBO SUPPORTO SERBATOIO L.2480	TANK SUPPORT PIPE L.2480	TUBE SUPPORT RESERVOIR L2460	ROHR HALTERUNG BEHZLTER L.2480	TUBO SOPORTE DEPSITO L 2480 T
24	G19204030	SCONTRO FISS.150 2F D15				
25	F01020225	VITE M14X 2X160 U5737 8.8 BR	BOLT M 14 X160 5737 8.G	VIS M 14 X160 5737 8.G	SCHRAUBE M 14 X160 5737 8.G	TORNILLO M 14 X160 5737 8.G
26	F01020397	VITE M 6X 1X 10 U5739 8.8 ZN	BOLT 6X10 5739 8.G GALVANIZED	VIS 6X10 5739 8.G ZN	SCHRAUBE 6X10 5739 8.G ZN	TORNILLO 6X10 5739 8.G ZN
27	F01020403	VITE M 6X 1X 16 U5739 8.8 ZN	BOLT M 6X16	VIS M 6X16	SCHRAUBE M 6X16	TORNILLO M 6X16
28	F01020472	VITE M10X 1,5X25 U5739 8.8 ZN	BOLT 10X25 5739 8.G GALVANIZED	VIS 10X25 5739 8.G ZN	SCHRAUBE 10X25 5739 8.G ZN	TORNILLO 10X25 5739 8.G ZN
29	F01070061	VIT.A.3,9X1,34X 9,5 6954 4.8NI				
30	F01070121	VIT.A.3,9X1,34X 9,5 6955 4.8NI	BOLT 3-9X 9-5 DIN 7982	VIS 3-9X 9-5 DIN 7982	SCHRAUBE 3-9X 9-5 DIN 7982	TORNILLO 3-9X 9-5 DIN 7982
31	F01200232	DADO M 6X 1 U5588 6.8 ZN				
32	F01200270	DADO M10X 1,5 U5588 6.8 ZN	NUT M10	ECROU M10	MUTTER M10	DADO M10
33	F01200306	DADO M14X 2 U5588 6.8 ZN	NUT M14X2	ECROU M14X2	MUTTER M14X2	DADO M14X2
34	F01220033	DADO M10X 1,5 D980 8 ZN	NUT M10X 1,5 D980 8 ZB	ECRO.M10X 1,5 D980 8 ZB	MUTT.M10X 1,5 D980 8 ZB	TUER.M10X 1,5 D980 8 ZB
35	F01410088	ROS.M14 15X 28X2,5 U6592 ZN	WAS.M14 15X 28X2,5 U6592 ZB	RON.M14 15X 28X2,5 U6592 ZB	SCH.M14 15X 28X2,5 U6592 ZB	ARA.M14 15X 28X2,5 U6592 ZB
36	F02200161	COPIGLIA 3X 15 U1336 ZN	SPLIT PIN 3 X15 1336 GALVAN.	GOUPILLE 3 X15 1336 ZN	SPLINT 3 X15 1336 ZN	PASADOR 3 X15 1336 ZN
37	F02200162	COPIGLIA 3X 20 U1336 ZN	SPLIT PIN 3 X20 1336 GALVAN.	GOUPILLE 3 X20 1336 ZN	SPLINT 3 X20 1336 ZN	PASADOR 3 X20 1336 ZN
38	F02200194	COPIGLIA 4X 25 U1336 ZN	SPLIT PIN 4 X25 1336 GALVAN.	GOUPILLE 4 X25 1336 ZN	SPLINT 4 X25 1336 ZN	PASADOR 4 X25 1336 ZN
39	F02100083	SPINA E.P. 5X 24 U6873 C70 BR	PIN EL. 5 X24 DIN 1481	FICHE EL. 5 X24 DIN 1481	SPANNSTIFT 5 X24 DIN 1481	CLAVIJA EL.5 X24 DIN 1481
40	F02100089	SPINA E.P. 5X 36 U6873 C70 BR	PIN EL. 5 X36 DIN 1481	FICHE EL. 5 X36 DIN 1481	SPANNSTIFT 5 X36 DIN 1481	CLAVIJA EL.5 X36 DIN 1481
41	F03011081	GUARNIZIONI LABBRO DE100				
42	F02300016	FASCETTA STRING. 16/27 H.8				
43	G65336041	MOLLA SPEC.ZN STRINGITUBO M80	SPEC.SPRING ZN . PIPE CLAMP M8	RESSORT SPEC. ZN SERRE-TUBE M8	SPEZIALFEDER ZN ROHRSCHELLE M8	MUELLE ESPEC. ZN APLASTA TUBOS
44	G65336046	MOLLA SPEC.ZN SCIVOLO M80	SPEC SPRING ZN CHUTE M80	RESSORT SPEC. ZN LANCOIR M80	SPEZIALFEDER ZN RUTSCHE M80	MUELLE ESPEC. ZN PLANO INCLINA
45	G22250240	DOSATORE COMPL. SV	MICRO DISTR.ROTOR 8 GROOVES	ROTOR DOSEUR 8C MICRO	DOSIERER KOMPL. SV	DOSIFICADOR COMPL. SV
46	G19700831	DECAL.TABELLA MICRO SP540	MICRO CHART STICKER SP540	DECALC. TABLEAU MICRO SP540	ABZIEHB. TABELLE MIKOR SP540	CAL.TABLA MICRO SP540
47	G65338043	MOLLA COMP.ZN SERB. M80	ZN TANK COMP.SPRING M80	RESSORT COMPL. ZN RESERVOIR M8	DRUCKFEDER ZN BEHZLTER M80	MUELLE COMP.ZN DEPS. M80 A
48	G66248119	RUOTA DENTATA Z-24 M80	GEAR-WHEEL Z-24 M80	ROUE DENTEE Z-24 M80	ZAHNRAD Z-24 M80	RUEDA DENTADA Z-24 M80
49	G66248120	RUOTA DENT.FORO QUAD.Z-24 M80	GEAR-WHEEL- SQUARE HOLE- Z-24	ROUE DENTEE TROU CARRE Z-24 M8	RAD VERZAHNT VIERKANTLOCH.Z-24	RUEDA DENT.ORIFICIO CUAD.Z-24
50	G66248121	BOCCOLA CON FLANGIA M80	BUSHING W/ FLANGE M80	SUPPORT AVEC BRIDE M80	BsCHSE MIT FLANSCH M80	CASQUILLO CON BRIDA M80
51	G66248123	CORPO DISTRIBUZIONE M80	DISTRIBUTION CASING M80	CORPS DISTRIBUTION M80	VERTEILUNGSKTRPER	CUERPO DISTRIBUCIN M80 C
52	G66248125	GHIERA REGOLAZIONE M80	ADJUSTMENT KNURLED NUT M80	BAGUE REGLAGE M80	EINSTELLMUTTER M80	CONTRATUERCA REGULACIN M80 G
53	G66248126	SUPP.TRASMISSIONE M80	TRANSM.SUPPORT M80	SUPPORT ENTRAINEMENT M80	ANTRIEBSHALTERUNG M80	SOPORTE TRANSMISIN M80 S
54	G66248138	COPERCHIO SUPP.TRASM. M80	TRANSMISSION SUPP. COVER M80	COUVERCLE SUPPORT ENTRAINEM.	DECKEL ANTRIEBSHALTERUNGS M80	TAPA SOP. TRANSM. M80
55	G66248154	SCIVOLO DISTR. M80	CHUTE- DISTRIB. M80	ENTONNOIR DOSEUR MINIMAX MICRO	SAAPPARAT RUTSCHE M80	PLANO INCLINADO DISTR. M80

TAV. 205

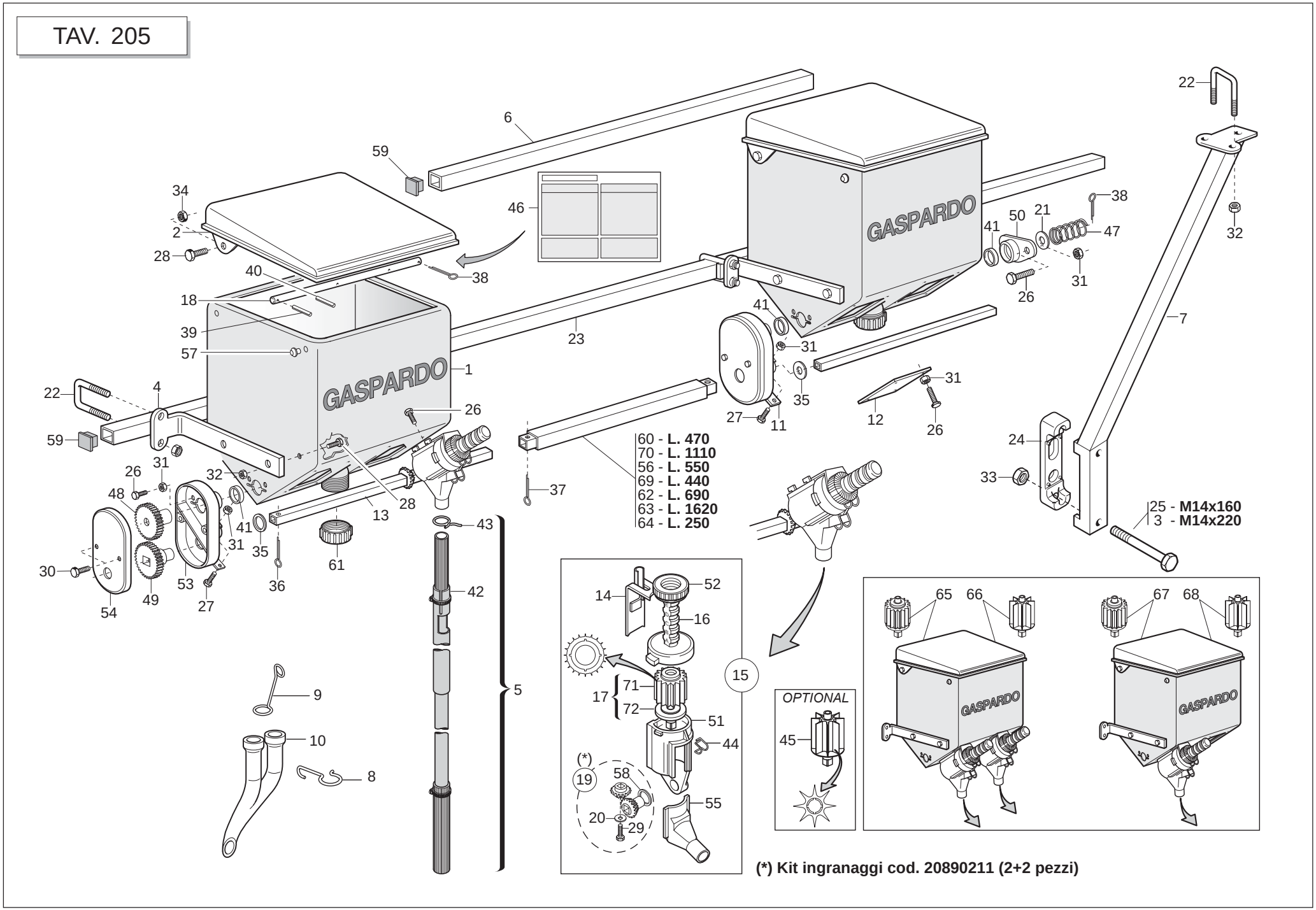
GASPARDO
60 - L. 470
70 - L. 1110
56 - L. 550
69 - L. 440
62 - L. 690
63 - L. 1620
64 - L. 250
25 - M14x160
3 - M14x220
OPTIONAL
(*) Kit ingranaggi cod. 20890211 (2+2 pezzi)

MICROGRANULATORE

TAV. 205

Pos.	Cod.	Descrizione	Description	Description	Benennung	Descripcion
56	G20890130	MANICOTTO UNIONE MICRO L.550	MICRO JOINT SLEEVE	MANCHON RACCORD MICRO L. 550	VERBINDUNGSMUFFE MIKRO L 550	MANGUITO DE UNIN MICRO L.550 M
57	G66248223	TAPPO SUPP.SPAND.D.11	PLUG MAN. SPR. SUPP. D.11	BOUCHON SUPPORT EP. ENGRAIS D.	HALTERUNGSPFROPFEN DsNGERSTR.	TAPN SOPORTE ABON.D.11 D
58	G20970100	RONDELLA 30X0,5X22 ACC.	WASHER 30X0-5X22 ACC.	RONDELLE 30X0-5X22 ACIER	UNTERLEGSCHEIBE 30X0-5X22 ACC.	ARANDELA 30X0-5X22 ACC.
59	F20120346	PUNTALE Q 35 ALETT.POLIT.NERO				
60	G20890111	MANIC.UNIONE RINV.MICRO L.470	MICRO TRANSM.JOINT SLEEVE L.47	MANCHON RACCORD TRANSMISSION M	VERBINDUNGSMUFFE VORGELEGE MIK	MANGUITO EMPALME TRANSM. MICRO
61	G16675090	TAPPO PLASTICA MICRO C/OR				
62	G20890202	MANICOTTO UNIONE MICRO L.690	MICRO JOINT SLEEVE L.690	MANCHON RACCORD MICRO L. 690	VERBINDUNGSMUFFE MIKRO L.690	MANGUITO DE UNIN MICRO L.690 M
63	G20890203	MANICOTTO UNIONE MICRO L.1620	MICRO JOINT SLEEVE L.1620	MANCHON RACCORD MICRO L. 1620	VERBINDUNGSMUFFE MIKRO L.1620	MANGUITO DE UNIN MICRO L.1620M
64	G20890205	MANICOTTO UNIONE MICRO L.250	MICRO JOINT SLEEVE L.250	MANCHON RACCORD MICRO L. 250	VERBINDUNGSMUFFE MIKRO L.250	MANGUITO DE UNIN MICRO L.250 M
65	G15476270	SERBATOIO MICRO 250 2 U.PLA	MICRO TANK 250 2 OUTPUTS	RESERVOIR MICRO 250 2 SORTIES	MIKROGRANULATBEHZLTER 250 2 AU	DEPSITO MICRO 250 2 SALIDAS B
66	G16675020	SERB.MICRO 250 2U PLA 8P.COMPL	MICRO TANK 250 2 OUTPUTS 8P. C	RESERV. MICRO 250 2 SORT. 8P.	MIKROGRANULATBEH. 250 2AUSG. 8	DEPSITO MICRO 250 2 SALIDAS 8P
67	G15476280	SERBATOIO MICRO PLA 1U COMPL	COMPL. MICRO TANK PLA 1U	RESERVOIR MICRO PLA 1U COMPL.	BEH-LTER MIKROGRANULAT PLASTIK	DEPOSITO MICRO PLA 1U COMPL.
68	G16675030	SERB.MICRO 250 1U PLA 8P.COMPL	MICRO TANK 250 1 OUTPUTS 8P. C	RESERV. MICRO 250 1 SORT. 8P.	MIKROGRANULATBEH. 250 1AUSG. 8	DEPSITO MICRO 250 1 SALIDAS 8P
69	G20890201	MANICOTTO UNIONE MICRO L.440	MICRO JOINT SLEEVE L.440	MANCHON RACCORD MICRO L. 440	VERBINDUNGSMUFFE MIKRO L.440	MANGUITO DE UNIN MICRO L.440 M
70	G20890112	MANICOTTO UNIONE MICRO L.1110	MICRO JOINT SLEEVE L.1110	MANCHON RACCORD MICRO L. 1110	VERBINDUNGSMUFFE MIKRO L1110	MANGUITO DE UNIN MICRO L.1110M
71	G66248189	DOSATORE M80	SEED METERING DEVICE M80	DOSEUR M80	DOSIERER M80	DOSIFICADOR M80
72	G19001802	RONDELLA-ALBERO MICRO				

TAV. 212

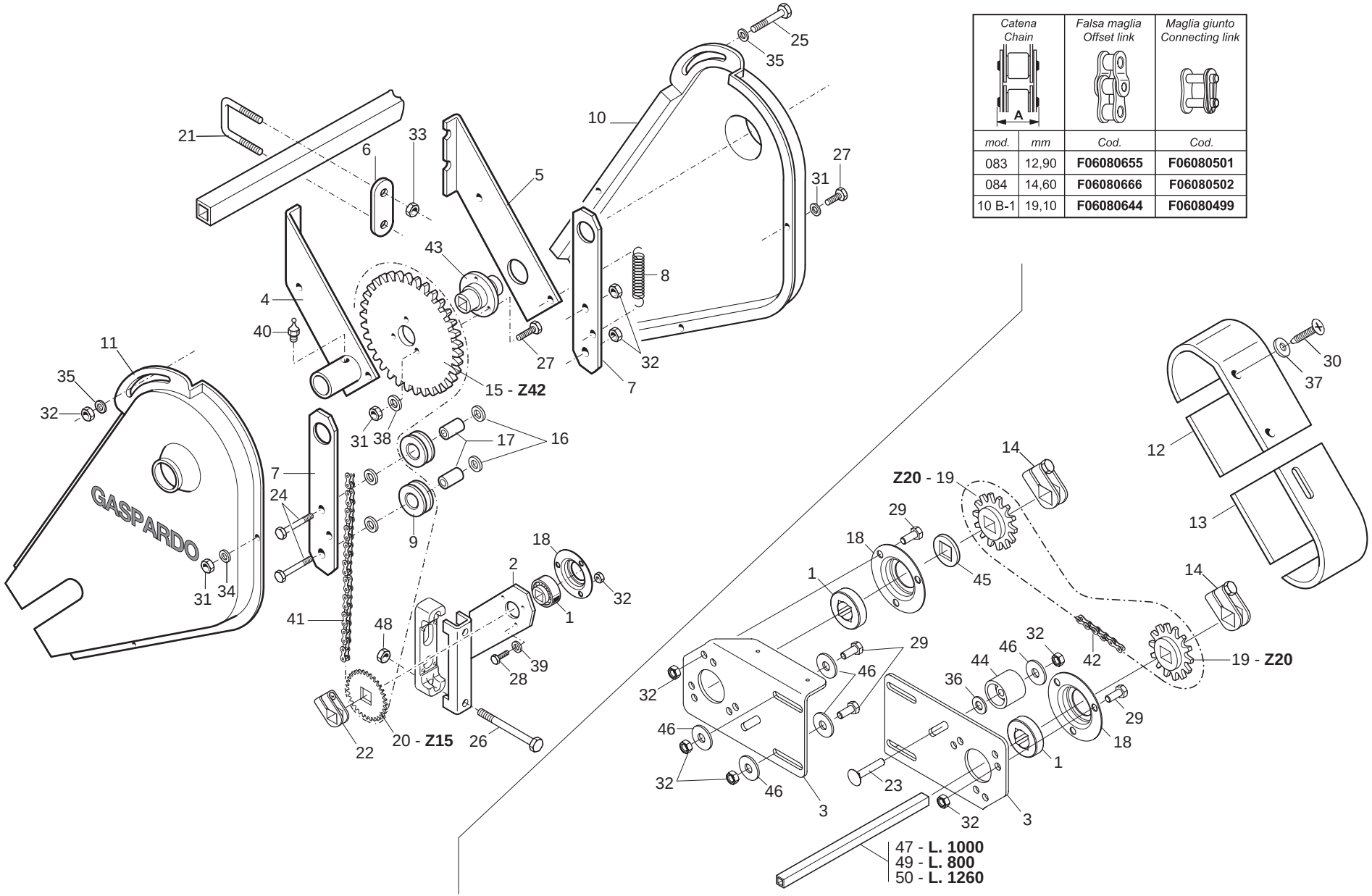

Catena Chain		Falsa maglia Offset link	Maglia giunto Connecting link
mod.	mm	Cod.	Cod.
083	12,90	**F06080655**	**F06080501**
084	14,60	**F06080666**	**F06080502**
10 B-1	19,10	**F06080644**	**F06080499**

TRASMISSIONE SPANDICONCIME E MICROGRANULATORE

TAV. 212

Pos.	Cod.	Descrizione	Description	Description	Benennung	Descripcion
1	G14830390	CUSCINETTO FORO QUADRO	SQUARE-HOLED BEARING	ROULEMENT AL+SAGE CARR+	VIERKANTLAGER	COJINETE ORIFICIO CUADRADO
2	G15470381	SUPPORTO RINVIO TUBO 150	TRANSM. SUPPORT FOR PIPE 150	SUPPORT RENVOI POUR TUBE 150	HALTERUNG VORGELEGE ROHR 150	SOPORTE TRANSMISION TUBO 150
3	G15470851	FIANCO SUPP.TRASM.SPANDI	SPREADER TRANSM. SIDE SUPPORT	COTE SUPPORT TRANSM. EPAND.	SEITEN HALTER. ANTRIEB DUNGERS	COSTADO SOPORTE TRANSM. ABONAD
4	G15475031	SUPPORTO TRASMISSIONE SX	LEFT TRANSMISSION SUPPORT	SUPPORT ENTRAINEMENT GCH	HALTERUNG GETRIEBE LI	SOPORTE TRANSMISIN IZQ S
5	G15475041	SUPPORTO TRASMISSIONE DX	RIGHT TRANSMISSION SUPPORT	SUPPORT ENTRAINEMENT DRT	HALTERUNG GETRIEBE RE	SOPORTE TRANSMISIN DER S
6	G15475260	SCONTRO SP	STRIKER PLATE SP	BUTEE SP	ANSCHLAG STREUER	ELEMENTO DE EMPALME SP
7	G15475310	SUPPORTO RULLINI TENDIC. MICRO	MICRO CHAIN STRETCHER ROLLERS	SUPP. ROUETS TEND. CHAINE MICR	HALTERUNG KETTENSPANNROLLEN	SOP. RODILLOS TENSOR CADENA MI
8	G18902960	MOLLA TRAZ.TRASM.RUOTA ZN	TRANSMISSION TENSIONER SPRING	RESSORT TRACT. ENTRAIN. ROUE Z	ZUGFEDER RADANTRIEB ZN	MUELLE TRAC. TRANSM.RUEDA ZN
9	G19000091	ROCCHETTO 2 META'	CHAIN TENSIONER	TENDEUR DE CHAINE 2 MOITIE	KLEINRAD SPANNER SA	CARRETE TENSOR SA
10	G19002810	CARTER RINVIO MICRO DX	RIGHT MICRO TRANSM. CASE	CARTER TRANSM. MICRO DRT	VORGELEGEGEHZUSE MIKRO RE	CæRTER TRANSMISIN MICRO DER C
11	G19002820	CARTER RINVIO MICRO SX	LEFT MICRO TRANSM. CASE	CARTER TRANSM. MICRO GCH	VORGELEGEGEHZUSE MIKRO LI	CæRTER TRANSMISIN MICRO IZQ C
12	G19002830	CARTER TRASMISSIONE SUPERIORE	TOP TRANSMISSION CASE	CARTER ENTRAINEMENT SUPERIEUR	OBERES ANTRIEBSGEHZUSE	CæRTER TRANSMISIN SUPERIOR C
13	G19002880	CARTER INFERIORE TRASM.SPAND.	BOTTOM SPREADER TRANSM. CASE	CARTER INFERIEUR TRANSM EPAND.	UNTER. ANTRIEBSGEHZUSE DsNG.GE	CæRTER INFER. TRANSMISIN ABONC
14	G22505085	FERMO ASSE IN LAMIERA	PLATE AXLE STOP	ARRET AXE EN TOLE	FESTSTELLVORRICHTUNG BLECHACHS	BLOQUEO EJE DE CHAPA
15	G20890128	CORONA Z-42 SP	RING GEAR Z-42 SP	COURONNE Z-42 SP	KRANZ Z-42 SP	CORONA Z-42 SP
16	G20970032	RONDELLA 32X4X8,5	WASHER 32X4X8-5	RONDELLE 32X4X8-5	UNTERLEGSCHEIBE 32X4X8-5	ARANDELA 32X4X8-5
17	G20980086	BOCCOLA DIST.D.8,5X16X31	BUSHING SPAC.. D.8-5X16X31	BOITE ENTRETOISE D. 8-5X16X31	VERTEILERBsCHSE D.8-5X16X31	CASQUILLO DIST. D.8-5X16X31
18	G22230094	SUPPORTO CUSCINETTO	BEARING SUPPORT	SUPPORT PALIER	LAGERBsCHSE	SOPORTE COJINETE
19	G22250007	INGR.CON MOZZO 1/2 Z-20 SV	GEARS- W/ HUB 1/2 Z-20 SV	ENGRENAGE 1/2 Z-20	ZAHNRAD MIT NABE 1/2 Z-20 SV	ENGRAN.CON PERNO 1/2 Z-20 SV
20	G22250028	PIGNONE Z-15 SV	Z-15 PINION SV	PIGNON Z-15 SV	RITZEL Z-15 SV	PI¾N Z-15 SV P
21	F20110706	CAV.Q.M10X 1,5X 30 47X 60 ZN	DISK SUPPORT.ELEMENT U BOLT SV	CAVALIER SUPPORT DISQUE SV	VERBINDUNG SCHEIBENHALTERUNG S	PERNO EN U SOP. DISCO SV
22	G22505085	FERMO ASSE IN LAMIERA	PLATE AXLE STOP	ARRET AXE EN TOLE	FESTSTELLVORRICHTUNG BLECHACHS	BLOQUEO EJE DE CHAPA
23	F01060047	BUL.M 8X1,25X 45 U5732 4.6 ZN	BOLT 8X45 5732 4.6 GALVANIZED	VIS 8X45 5732 4.6 ZN	SCHRAUBE 8X45 5732 4.6 ZN	TORNILLO 8X45 5732 4.6 ZN
24	F01020075	VITE M8X1,25X 55 U5737 8.8 ZN	BOLT 8 X55 5737 8.8 GALVANIZED	VIS 8 X55 5737 8.8 ZN	SCHRAUBE 8 X55 5737 8.8 ZN	TORNILLO 8 X55 5737 8.8 ZN
25	F01020083	VITE M 8X1,25X70 U5737 8.8 ZN	BOLT M 8X70	VIS M 8X70	SCHRAUBE M 8X70	TORNILLO M 8X70
26	F01020236	VITE M14X 2X220 U5737 8.8 BR	SCREW M14X2X220 U5737 8.8 BR	VIS M14X2X220 U5737 8.8 BR	SCHRAUBE M14X2X220 U5737 8.8	TORNILLO M14X2X220 U5737 8.8
27	F01020403	VITE M 6X 1X 16 U5739 8.8 ZN	BOLT M 6X16	VIS M 6X16	SCHRAUBE M 6X16	TORNILLO M 6X16
28	F01020432	VITE M 8X1,25X16 U5739 8.8 ZN	BOLT M 8X16	VIS M 8X16	SCHRAUBE M 8X16	TORNILLO M 8X16
29	F01020436	VITE M 8X1,25X 20 U5739 8.8 ZN	BOLT M 8X20	VIS M 8X20	SCHRAUBE M 8X20	TORNILLO M 8X20
30	F01070074	VIT.A.4,2X1,41X 25 6954 4.8NI	BOLT 4-2X25 DIN 7981	VIS 4-2X25 DIN 7981	SCHRAUBE 4-2X25 DIN 7981	TORNILLO 4-2X25 DIN 7981
31	F01200232	DADO M 6X 1 U5588 6.8 ZN				
32	F01200244	DADO M 8X1,25 U5588 6.8 ZN	NUT M8	ECROU M8	MUTTER M8	DADO M8
33	F01200270	DADO M10X 1,5 U5588 6.8 ZN	NUT M10	ECROU M10	MUTTER M10	DADO M10
34	F01410037	ROS.M6 6,4X12,5X1,6 U6592 ZN	PLANE WASHER D.6	RONDELLE D.6	SCHEIBE D.6	ARANDELA D.6
35	F01410051	ROS.M8 8,4X 17X1,6 U6592 ZN	PLANE WASHER D.8	RONDELLE D.8	SCHEIBE D.8	ARANDELA D.8
36	F01410064	ROS.M10 10,5X 20X 2 U6592 ZN	WASHER 10,5X21	RONDELLE 10,5X21	SCHEIBE 10,5X21	ARANDELA 10,5X21
37	F01420011	ROS.M4 4,3X 16X 1 U6593 ZN	FLAT WASHER 4-3X 16X1-5 6593 G	ROND.PLATE 4-3X 16X1-5 6593 ZN	SCHEIBE 4-3X 16X1-5 6593 ZN	ARAND. PLANA 4-3X 16X1-5 6593
38	F01430047	ROS.M6 6,4X 11X0,7 U8842J ZN	WASHER D6 DIN 6798 D.INT.GALV.	RONDELLE D6 DIN 6798 D. INT. Z	UNT. SCHEIBE D6 DIN 6798 D. IN	ARANDELA D6 DIN 6798 D.INT.ZN
39	F01430059	ROS.M8 8,4X 15X0,8 U8842J ZN	WASHER D8 DIN 6798 D.INT.ZN	RONDELLE D8 DIN 6798 D. INT. Z	UNT. SCHEIBE D8 DIN 6798 D. IN	ARANDELA D8 DIN 6798 D.INT.ZN
40	F01100011	ING.M 6X1 7663-A 9SMNPB28 ZN	SPHERE NIPPLE M6X1/A	GRAISSEUR A BILLES M6X1/A	KUGELFETTBsCHSE M6X1/A	ENGRAS. DE ESFERAS M6X1/A
41	F06080057	CATENA 1/2 ISO 083 107 MAGLIE	CHAIN ISO 083 107 LINKS	CHAINE ISO 083 107 MAILLES	KETTE ISO 083 107 GLIEDER	CADENA ISO 083 107 ESLABNE L
42	F06080025	CATENA 1/2 ISO 083 56 MAGLIE	CHAIN 1/2-3/16 56 LINKS.	CHAINE 1/2-3/16 56 MAILLES	KETTE 1/2-3/16 56 GLIEDER	CADENA 1/2-3/16 56 ESLABNE
43	G66248152	MOZZO TRASM.MICRO M80	HUB - TRANSM. MICRO M80	MOYEU ENTRAINEMENT MICRO M80	ANTRIEBSNABE MIKRO M80	CUBO TRANSM. MICRO M80
44	G66248207	TENDICATENA SPAND. SP-520	CHAIN TENSIONER	TENDEUR DE CHAINE EPAND. ENGR.	KETTENSPANNER DsNGERSTR. SP-52	TENSOR DE CADENA ABON. SP-520
45	G66248218	RONDELLA DISTAN.SPAND.	MAN. SPR. SPACER WASHER	RONDELLE ENTRETOISE EP. ENGRAI	ABSTANDSCHEIBE DsNGERSTREUER	ARANDELA DISTAN.ABONAD.
46	F01420048	ROS.M8 8,4X 24X 2 U6593 ZN	PLANE WASHER D.8	RONDELLE D.8	SCHEIBE D.8	ARANDELA D.8
47	G22230138	ASSE CAMBIO 4F.80-6F.45 L.1000	GEAR SPINDLE 4-ROW 80- 6-ROW.4	AXE BOITE DE VITESSE 4 RA	GETRIEBEACHSE 4 R. 80-6 R.45 L	EJE CAMBIO 4 FILAS. 80-6 FILAS
48	F01200306	DADO M14X 2 U5588 6.8 ZN	NUT M14X2	ECROU M14X2	MUTTER M14X2	DADO M14X2
49	G22230142	ASSE 4 FILE L.800	4-ROW SPINDLE L.800	AXE 4 RANGEES L. 800	ACHSE 4 REIHEN B. 800	EJE 4 FILAS L.800
50	G22270049	ASSE 4F.85-6F.50 L.1260	4-ROW SPINDLE - 85-6-ROW-50 L.	AXE 4 RANGEES 85-6 RANGEES 50	ACHSE 4 REIHEN 85-6 REIH. 50	EJE 4 FILAS. 85-6 FILAS. 50 L.

TAV. 251

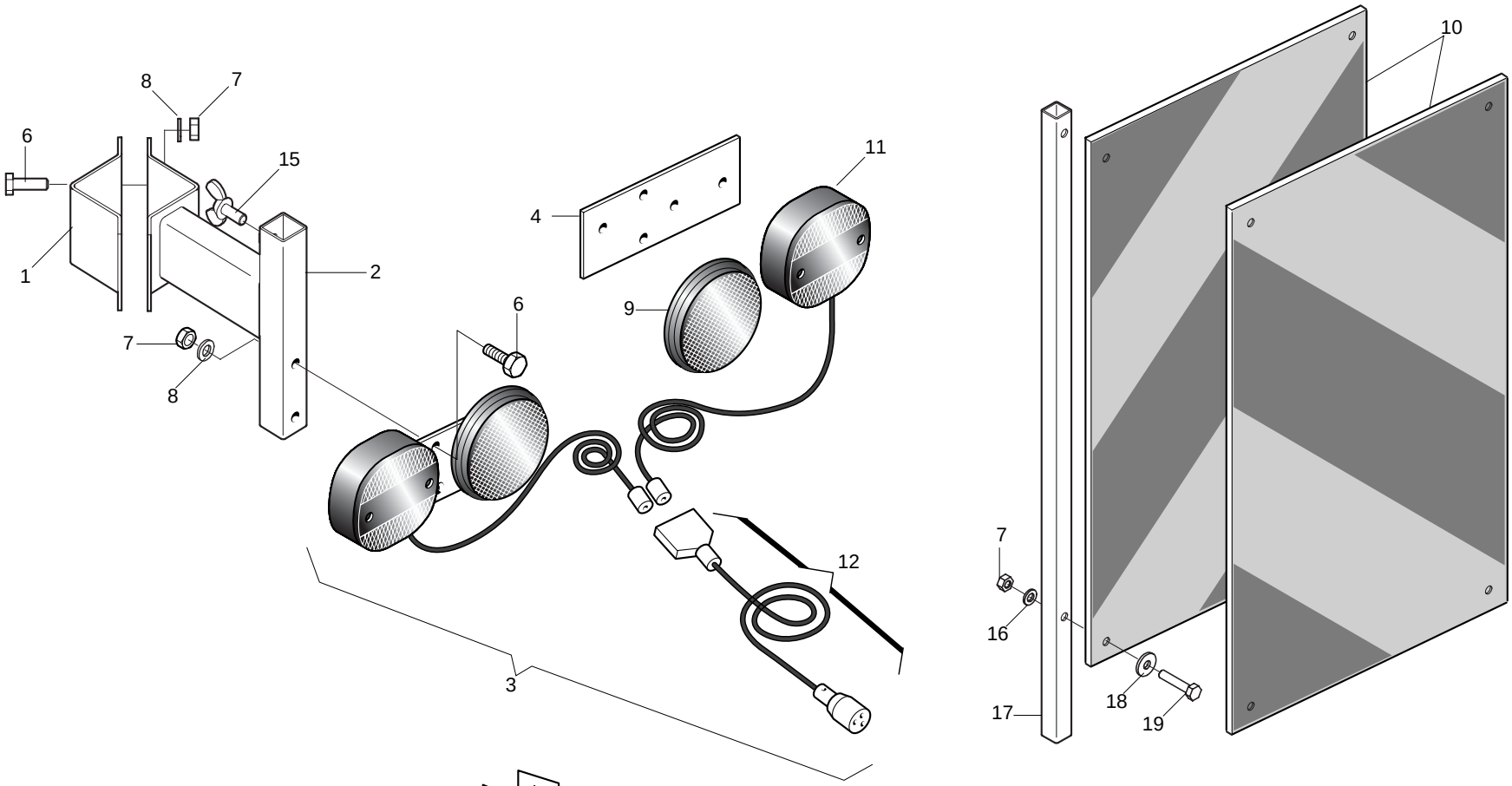

5
Rosso Gaspardo - 1Kg
Gaspardo red - 1Kg
Rot Gaspardo - 1Kg
Rouge Gaspardo - 1Kg
Rojo Gaspardo - 1Kg

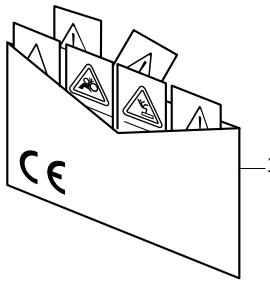

13
DECALCOMANIE AVVERTIMENTO
DECAL
DBZIEHBILD
DECALCOMANIE
CALCOMANIE
CALCOMANIE

GASPARDO

SI

14

ACCESSORI

TAV. 251

Pos.	Cod.	Descrizione	Description	Description	Benennung	Descripcion
1	G15411260	FORCELLA LUCI ZN	OPENING FORK ZN	FOURCHE FEUX ZN	LICHTERGABEL ZN	HORQUILLA LUCES ZN
2	G15412640	SUPPORTO KIT LUCI POST.	REAR LIGHT SUPPORT KIT	SUPPORT KIT FEUX ARRI+RE	HALTERUNG KIT HINT. LICHTER	SOPORTE KIT LUCES POST.
3	G13616620	KIT LUCI PER MACCHINE PORTATE	LIGHT KIT FOR MOUNTED MACHINE	KIT FEUX POUR MACHINES PORT+ES	KIT LICHTER F_R FÍRDERMASCHINE	KIT LUCES PARA M-QUINAS SUSPEN
4	G13616570	PIASTRA SUPP.LUCI	LIGHTS SUPPORT PLATE	PLAQUE DE SUPPORT ECLAIRAGE	LICHTERHALTERUNGSPLATTE	PLACA SOPORTE LUCES
5	F03200251	ROSSO GASPARDO RAL3020 BICOMP.				
6	F01020403	VITE M 6X 1X 16 U5739 8.8 ZN	BOLT M 6X16	VIS M 6X16	SCHRAUBE M 6X16	TORNILLO M 6X16
7	F01220011	DADO M 6X 1 D980 8 ZN	SELF LOCKING NUT M6	ECROU AUTOBL. M6	SELBSTSPERR.MUTTER M6	DADO AUTOBL. M6
8	F01430047	ROS.M6 6,4X 11X0,7 U8842J ZN	WASHER D6 DIN 6798 D.INT.GALV.	RONDELLE D6 DIN 6798 D. INT. Z	UNT. SCHEIBE D6 DIN 6798 D. IN	ARANDELA D6 DIN 6798 D.INT.ZN
9	F05010221	CATARIFRANGENTE TONDO D.80 >	D.80 ROUND REFLECTOR	CATADIOPTRE ROND D.80	RUNDER R_CKSTRAHLER D.80	PAPEL REFRACTARIO REDONDO D.80
10	F05010357	N.2 PANNELLI CARICHI SPORGENTI	N[JUTTING LOAD PANELS	N. 2 PANNEAUX CHARGES SAILLANT	N.2 TAFELN VORSPRINGENDE LADUN	2 PANELES CARGADOS SALIENTES
11	F05010076	FANALE X KIT LUCI	LAMP KIT LIGHTS COMPL.	FEU KIT ECLAIRAGE COMPL.	LAMPEN KIT LICHT KOMPL.	FAROL SET LUCES COMPL.
12	F05010080	CABLAGGIO PER KIT LUCI	LIGHT WIRING HARNESS	CABLAGE KIT PHARES	VERKABELUNG LAMPENKIT	CABLEADO JUEGO LUCES
13	G89900500	KIT DECALCOMANIE -CE-	DECAL KIT -CE-	KIT DECALCOMANIE -CE- K	IT ABZIEHB. -CE- S	ET CALCOMANAS -CE-
14	G89900512	KIT DECALCOMANIE SI-MTI	DECAL KIT SI-MTI	KIT DECALCOMANIE SI-MTI	KIT ABZIEHB. SI-MTI	SET CALCOMANAS SI-MTI
15	F01090215	VITE M 8X1,25X15 U5449 5.8 ZN	BOLT 8X15 UNI 5449 5.8 GALVANI	VIS 8X15 UNI 5449 5.8 ZN	SCHRAUBE 8X15 UNI 5449 5.8 ZN	TORNILLO 8X15 UNI 5449 5.8 ZN
16	F01410037	ROS.M6 6,4X12,5X1,6 U6592 ZN	PLANE WASHER D.6	RONDELLE D.6	SCHEIBE D.6	ARANDELA D.6
17	G15412650	TUBO Q. 16X1,5X 643 ZN	GALVAN. SQUARE 16X1,5X643	TUBE CARRE 16X1,5X643 ZN	ROHR Q. 16X1,5X643 ZN	TUBO CUADRADO 16X1,5X643 ZN
18	F01420036	ROS.M6 6,4X 18X 2 U6593 ZN	FLAT WASHER 6-6X 18X2 6593 ZN	ROND. PLATE 6-6X 18X2 6593 ZN	SCHEIBE 6-6X 18X2 6593 ZN	ARAND. PLANA 6-6X 18X2 6593 ZN
19	F01020408	VITE M 6X 1X 30 U5739 8.8 ZN	BOLT M 6X1X30	VIS M 6X1X30	SCHRAUBE M 6X1X30	TORNILLO M 6X1X30
20	G13616570	PIASTRA SUPP.LUCI	LIGHTS SUPPORT PLATE	PLAQUE DE SUPPORT ECLAIRAGE	LICHTERHALTERUNGSPLATTE	PLACA SOPORTE LUCES

TAV. 330

Codice - Code	Descrizione - Description	Lunghezze Lengths min.	Lunghezze Lengths max.	Classe - Size (A x B)	Tipo - Type (*)		Forcelle - Yokes (**) Z6 (1"3/8)	Z6 (1"3/4)	Z8 (32x38)	Z20 (1"3/4)	Z21 (1"3/8)
F08011711	CARD.B1 Z6-Z6 L700	700	1100	B1 (22 x 54)	A	A	G58161015	F08011772	F08011742	F08011758	F08011767
F08011712	CARD.B3 Z6-Z6 L1300	1300	2000	B3 (27 x 70)	A	A	———	G58161016	F08011743	———	———
F08011713	CARD.B1 Z8-Z6 L700	700	1100	B1 (22 x 54)	A	A	G58161015	F08011772	F08011742	F08011758	F08011767
F08011714	CARD.B1 Z20-Z6 L700	700	1100	B1 (22 x 54)	A	A	G58161015	F08011772	F08011742	F08011758	F08011767
F08011715	CARD.B1 Z8-Z6 L900 R.LIB	900	1400	B1 (22 x 54)	A	B	G58161015	F08011772	F08011742	F08011758	F08011767
F08011716	CARD.B1 Z6-Z6 L900 R.LIB	900	1400	B1 (22 x 54)	A	B	G58161015	F08011772	F08011742	F08011758	F08011767
F08011719	CARD.B2 Z6-Z6 L900	900	1400	B2 (23,8 x 61,3)	A	B	———	———	———	———	———
F08011720	CARD.B3 Z8-Z6 L1300	1300	2000	B3 (27 x 70)	A	A	———	G58161016	F08011743	———	———
F08011757	CARD.B1 Z20-Z6 L900 R.L	900	1400	B1 (22 x 54)	A	B	G58161015	F08011772	F08011742	F08011758	F08011767
F08011764	CARD.R4 Z20-Z6 L1210 OM-RL	1210		R4 (27 x 74,6)	A	C	F08011768	———	F08011766	F08011774	F08011773

(*)

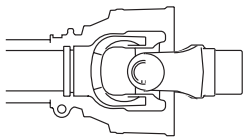

GIUNTO STANDARD
STANDARD JOINT

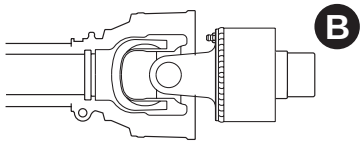

RUOTA LIBERA
OVERRUNNING CLUTCH

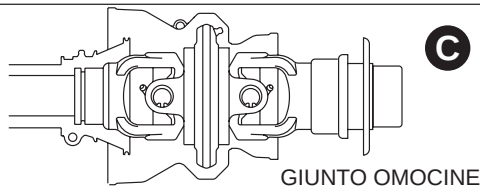

GIUNTO OMOCINETICO
CONSTANT VELOCITY JOINT

(**)

Z6 (1"3/8)

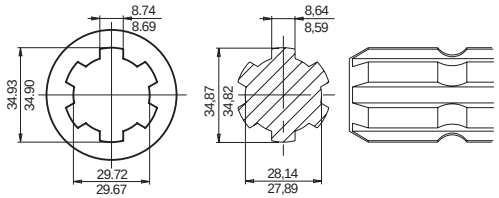

Z6 (1"3/4)

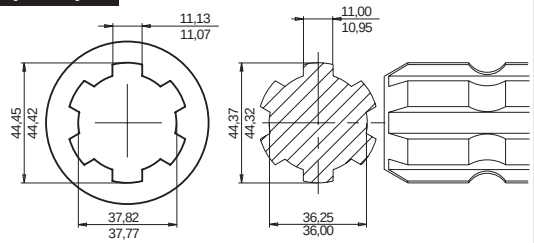

Z8 (32x38)

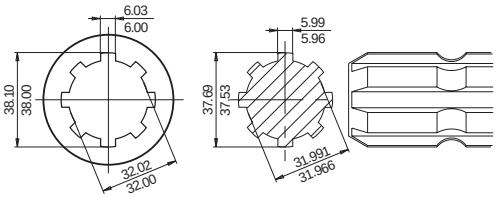

Z20 (1"3/4)

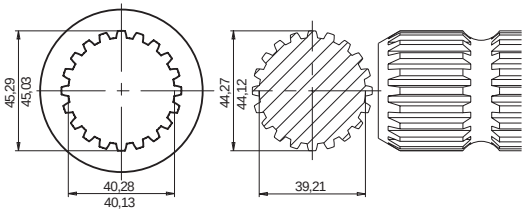

Z21 (1"3/8)

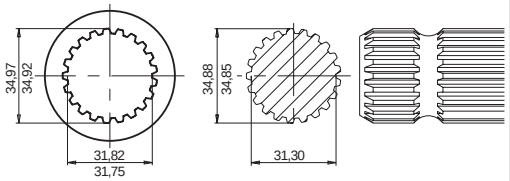

GASPARDO

CARDANI

TAV. 330

Pos.	Cod.	Descrizione	Description	Description	Benennung	Descripcion
	F08011711	CARD.B1 Z6-Z6 L700	UNIVERSAL JOINT S10 0700F 112	CARD NORM S10 0700F1121121CAT	KARDAN S10 0700F 112 112 1CAT	CARDæN S10 0700F 112 112 1CAT
	F08011712	CARD.B3 Z6-Z6 L1300	UNIVERSAL JOINT T40 1020F 112	CARD. T40 1020F 112 112 1 CAT	KARDAN T40 1020F 112 112 1CAT	CARDæN T40 1020F 112 112 1CAT
	F08011713	CARD.B1 Z8-Z6 L700	UNIV.JOINT B1070BA32A60 Z-8 Z-	CARD. B1070BA32A60 Z-8 Z-6	KARDAN B1070BA32A60 Z-8 Z-6	CARD+N B1070BA32A60 Z-8 Z-6
	F08011714	CARD.B1 Z20-Z6 L700				
	F08011715	CARD.B1 Z8-Z6 L900 R.LIB				
	F08011716	CARD.B1 Z6-Z6 L900 R.LIB	UNIV.JOINT CE T100710 112 R12	CARD ROUE LIBRE T100710 112R12	KARDAN CE T100710 112 R12	CARDAN CE T100710 112 R12
	F08011719	CARD.B2 Z6-Z6 L900	UNIVERSAL JOINT 102 071 N T07	CARD. 102 071 N T07 T07 1 CAT	KARDAN 102 071 N T07 T07 1CAT	CARDæN 102 071 N T07 T07 1CAT
	F08011720	CARD.B3 Z8-Z6 L1300				
	F08011742	FORCELLA CARD.32X38 Z8 B1	CARDAN SHAFT FORK Z.8	FOURCHETTE CARDAN Z.8	GABEL KARDAN Z.8	HORQUILLA CARDæN Z.8
	F08011743	FORCELLA CARD.32X38 Z8 B3				
	F08011757	CARD.B1 Z20-Z6 L900 R.L >				
	F08011758	FORCELLA CARD.1"3/4 Z20 B1 >				
	F08011764	CARDANO OM 3/4Z20-RL Z6 L1210				
	F08011766	FORCELLA CARD.32X38 Z8 R4				
	F08011767	FORCELLA CARD.1 3/8 Z21 B1 >				
	F08011768	FORCELLA CARD.1 3/8 Z6 R4				
	F08011772	FORCELLA CARD.1"3/4 Z6 B1 >				
	F08011773	FORCELLA CARD.1 3/8 Z21 R4 >				
	F08011774	FORCELLA CARD.1 3/4 Z20 R4				
	G58161015	FORCELLA CARD.1'3/8 Z6 B1				
	G58161016	FORCELLA CARD.1'3/8 Z6 B3 >				

USATE SEMPRE RICAMBI ORIGINALI
ALWAYS USE ORIGINAL SPARE PARTS
IMMER DIE ORIGINAL-ERSATZTEILE VERWENDEN
*EMPLOYEZ TOUJOURS LES PIECES DE RECHANGE ORI*GINALES
UTILIZAR SIEMPRE REPUESTOS ORIGINALES

GASPARDO

Servizio Assistenza Tecnica - After Sales Service
Servizio Ricambi - Spare Parts Service
+39 0434 695410

Agip

DEALER:

G19530286

G19530286

MASCHIO GASPARDO

MASCHIO GASPARDO SpA
Sede legale e stabilimento produttivo
Via Marcello, 73 - 35011 Campodarsego (Padova) - Italy
Tel. +39 049 9289810
Fax +39 049 9289900
Email: info@maschio.com
www.maschionet.com

MASCHIO DEUTSCHLAND GMBH
Äußere Nürmberger Straße 5
D - 91177 Thalmässing
Deutschland
Tel. +49 (0) 9173 79000
Fax +49 (0) 9173 790079

MASCHIO FRANCE Sarl
1, Rue de Mérignan ZA
F - 45240 La Ferte St. Aubin
France
Tel. +33 (0) 2.38.64.12.12
Fax +33 (0) 2.38.64.66.79

MASCHIO IBERICA S.L.
Calle Cabernet, 10
Poligono Industrial Clot de Moja
Olerdola - 08734 Barcelona
Tel. +34 93.81.99.058
Fax +34 93.81.99.059

MASCHIO-GASPARDO USA Inc
120 North Scott Park Road
Eldridge, IA 52748 - USA
Ph. +1 563 2859937
Fax +1 563 2859938
e-mail: info@maschio.us

MASCHIO GASPARDO SpA
Stabilimento produttivo
Via Mussons, 7 - 33075
Morsano al Tagliamento (PN) - Italy
Tel. +39 0434 695410
Fax +39 0434 695425
Email: info@gaspardo.it

000 МАСКИО-ГАСПАРДО РУССИЯ
Улица Пушкина, 117 Б
404126 Волжский
Волгоградская область
Тел. +7 8443 525065
факс. +7 8443 525064

MASCHIO-GASPARDO ROMANIA S.R.L.
Strada Înfrátirii, F.N.
315100 Chisineu-Cris (Arad) -România
Tel. +40 257 307030
Fax +40 257 307040
e-mail: maschio@maschio.ro

MASCHIO MIDDLE EAST
P.O. Box 922388
Amman, 11192 Jordan
Tel. 962 605511384
Fax 962 6 5538398
e-mail: tahaeng@nets.com.jo

GASPARDO-MASCHIO TURCHIA
MASCHIO-GASPARDO CANADA Inc
MASCHIO-GASPARDO CINA
MASCHIO-GASPARDO POLAND
MASCHIO-GASPARDO UCRAINA
GASPARDO BIELORUSSIA
MASCHIO-GASPARDO KOREA