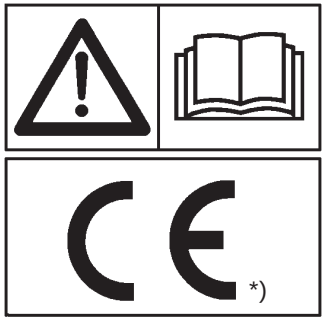

GASPARDO

MASCHIO GASPARDO S.p.A.

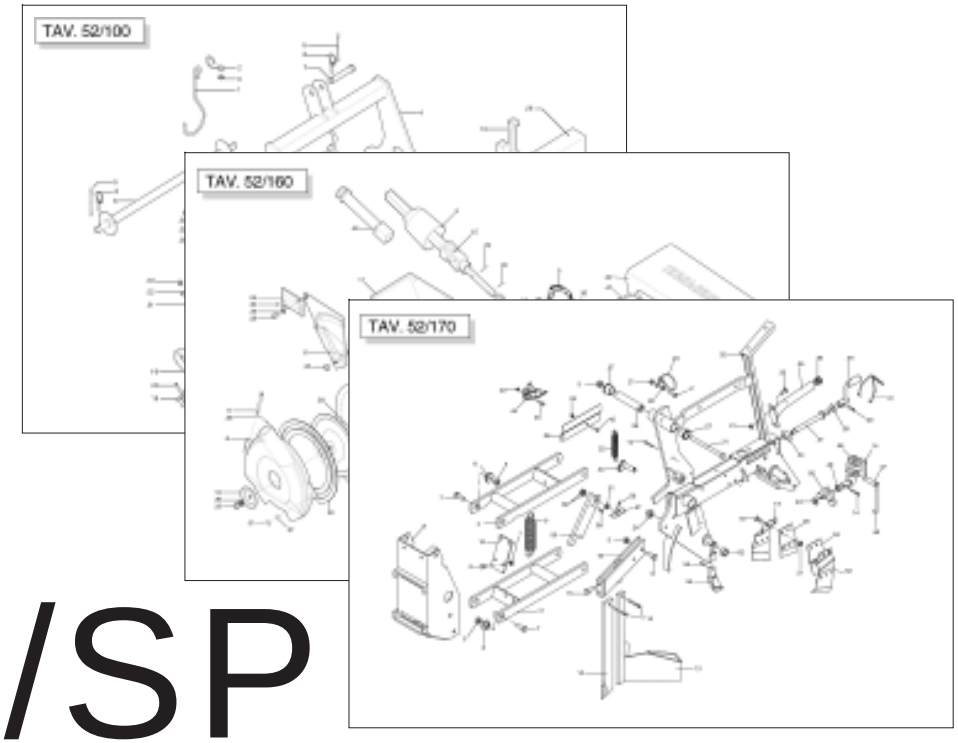

METRO MT/SP

Cod: G19530912 2009-01

*) Valido per Paesi UE
*) Valid for EU member countries
*) Valable dans les Pays UE
*) Gilt für EU-Mitgliedsländer
*) Válido para Países UE

IT PARTI DI RICAMBIO
EN *SPARE PARTS*
DE ERSATZTEILE
FR *PIECES DÉTACHÉES*
ES PIEZAS DE REPUESTO

ITALIANO

PARTI DI RICAMBIO

Le ordinazioni delle parti di ricambio vanno fatte presso i nostri concessionari di zona e devono essere sempre corredate dalle seguenti indicazioni:

- **Tipo, modello e numero di matricola dell'attrezzatura.** Tali dati sono stampigliati nell'apposita targhetta di cui è dotata ogni attrezzatura.

- **Numero di codice della parte richiesta** rilevabile dal catalogo ricambi.

- **Descrizione del particolare e quantità richiesta.**

- **Numero della tavola.**

- **Mezzo di trasporto.** Nel caso questa voce non sia specificata, la Ditta Costruttrice, pur dedicando a questo servizio una particolare cura, non risponde di eventuali ritardi di spedizione dovuti a cause di forza maggiore.
Le spese di trasporto si intendono sempre a carico del destinatario. La merce viaggia a rischio e pericolo del committente anche se venduta franco destino.

NOTA: Il termine (**Dx**) **Destro** o (**Sx**) **Sinistro** della macchina o di parti di essa, è inteso guardando la macchina dalla parte posteriore. Le eccezioni saranno indicate.

ENGLISH

SPARE PARTS

Orders must be transmitted through our area dealers and should always include the following indications:

- ***Type, model and serial number of the machine.*** *These data are punched on the data plate with which every implement is equipped.*

- ***Code number of the required spare part.*** *This will be found in the spare parts catalogue.*

- ***Description of the part and required quantity.***

- ***Table number.***

- ***Means of dispatch.*** *If this item is not indicated, the Manufacturer, while dedicating particular care to this service, shall not be held responsible for delays in delivery caused by cases of force majeure.*
Transport expenses shall always be at the consignee's charge. The goods travel at the purchaser's risk and peril even when sold ex destination.

NOTE: *The symbols (**Dx**) **right** and (**Sx**) **left**, concerning the machine or single parts of it, are referred, as in the figure, to a rear view of them. Exceptions will be indicated.*

DEUTSCH

ERSATZTEILE

Die Bestellungen müssen bei unseren Gebietshändrer aufgegeben werden. Bei der Bestellung sind stets die folgenden Angaben zu machen:

- **Typ, Modell und Serien-Nummer des Geräts**. Diese Daten stehen auf dem Typenschild, mit dem jedes Gerät versehen ist.

- **Artikel Nr. der erforderlichen Ersatzteile.** Diese stehen im Ersatzteil-Katalog.

- **Beschreibung des Ersatzteils und die erforderliche Stückzahl.**

- **Tafelnummer.**

- **Versandmittel.** Wenn dieser Punkt nicht spezifiziert wird, haftet die Herstellerfirma nicht für etwaigen Lieferverzug aufgrund höherer Gewalt, auch wenn er diesen Service besonders aufmerksam abwickelt.
Die Frachtkosten gehen dagegen immer zu Lasten des Empfängers. Die Ware reist auf Gefahr und Risiko des Auftraggebers, auch wenn frei Haus Verkauft vereinbart worden ist.

N.B.: Die Merkzeichen (**Dx**) **rechts** und (**Sx**) **links** betreffen eine rückwärtige Aussicht der Maschine oder Teile von ihr (siehe Bild). Ausnahmen werden gezeigt.

FRANÇAIS

PIECES DÈTACHÈES

Les ordres doivent être effectués auprés de nos concessionaires de zone en précisant les indications suivantes:

- ***Type, modéle et numéro de série de la machine****. Ces données sont gravées sur la plaque d'identification de chaque outil.*

- ***Numéro de code de la piéce détachée*** *indiqué sur le catalogue des piéces détachées.*

- ***Description de la piéce et quantité requise****.*

- ***Numéro de plan****.*

- ***Moyen d'expédition****. Si cette rubrique n'est pas indiquée, le Constructeur, bien que soucieux de ce service, ne répond pas des retards d'expédition pour des causes de force majeure.*
Les frais de transport sont toujours à la charge du destinataire. La marchandise voyage aux risques et périls de l'acheteur même si vendue franco de port.

N.B.: *Les références (**Dx**) **droit** et (**Sx**) **gauche** de la machine ou des parties de la même, est entendue, comme de la figure, en regardant la machine de derriere dans le sens de marche.*

ESPAÑOL

RESPUESTOS

Los pedidos han de efectuarse en nuestros consesionarios de zona y deben incluir siempre las siguientes indicaciones:

- **Tipo, modelo y número de matrícula del equipo**. Dichos datos están impresos en la relativa placa presente en el equipo.

- **Número de código de la parte requerida** presente en el catálogo respuestos.

- **Descripcíon de la pieza y cantidad requerida**.

- **Numero de illustración**.

- **Medio de transporte**. En caso que este ítem no esté especificado, el Fabricante, aún prestando la debidas consideraciones para este aspecto, no responde por eventuales retardos de env'o debidos a causas de fuerza mayor.
Los gastos de transporte se consideran siempre a cargo del destinatario. La mercandería viaja bajo riesgo y peligro del comprador, incluso cuando se vende franco destino.

N.B.: La refencia (**Dx**) **derecha** o (**Sx**) **izquierda** de la máquina o de sus componentes, se entiende, como en la figura, mirando la máquina por la parte trasera. Se indicarán las excepciones.

N° Tavola	*Descrizione*	*Pagina*
TAV. 012	Telaio e attacco 3 punti	4
TAV. 022	Distributore aria	6
TAV. 032	Trasmissione cambio	8
TAV. 042	Ruote di trasmissione	12
TAV. 052	Ruote di trasmissione anteriori	14
TAV. 062	Supporti serbatoio spandiconcime	16
TAV. 072	Serbatoio spandiconcime	18
TAV. 082	Elementi di concimazione	22
TAV. 090	Speedy set	24
TAV. 100	Trasmissione spandiconcime	26
ELEMENTO SEMINATORE TIPO	**“MT”**	
TAV. 120	Distributore semi	28
TAV. 112	Scatola di rinvio elemento	30
TAV. 132	Telaio elemeto	32
TAV. 142	Ruote di profondità di compressione	34
TAV. 150	Coprisemi anteriori e posteriori per ruote a “V”	38
TAV. 160	Ruota compressione farmflex Ø 370 (con copriseme anteriore)	40
TAV. 171	Coltro a disco striato	42
TAV. 181	Esclusione elettrica file di semina	44
ELEMENTO SEMINATORE TIPO	**“SP”**	
TAV. 200	Distributore semi	46
TAV. 192	Scatola rinvio elemento	50
TAV. 212	Telaio elemento	52
TAV. 221	Elementi assolcatori	54
TAV. 231	Ruote di compressione	56
TAV. 241	Bilanciere	58
TAV. 251	Esclusione elettrica file di semina	62
TAV. 262	Accessori	64
TAV. 270	Dischi di semina	66

TAV. 12

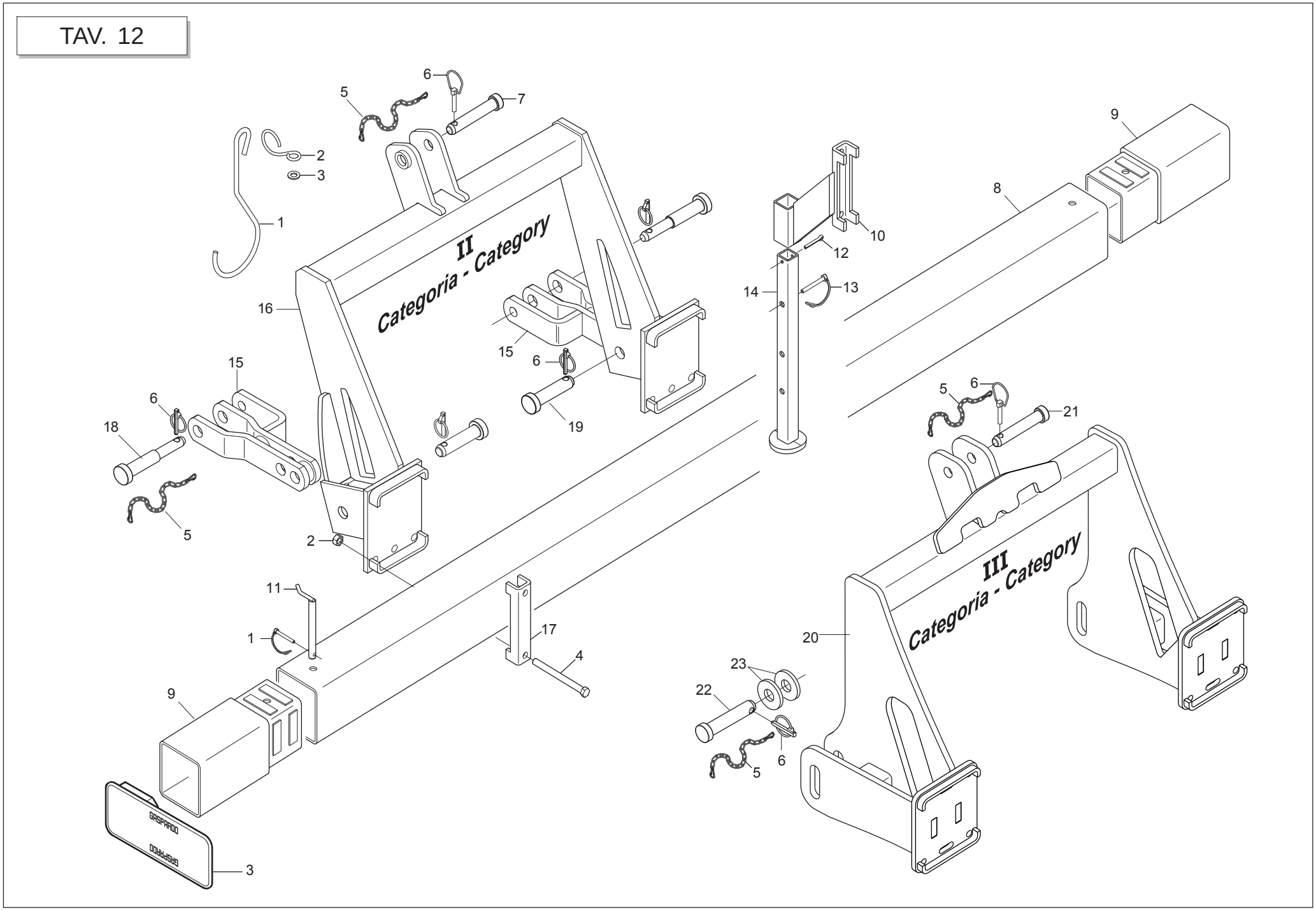

GASPARDO

cod. G19530911

TELAIO E ATTACCO 3 PUNTI

TAV. 12

Pos.	Cod.	Descrizione	Description	Description	Benennung	Descripcion
1	F02100312	SPINA DI SICUREZZA D.8X45 ZN	SAFETY PIN D.8X45 ZN	GOUPILLE DE SECURITE D.8X45 ZN	SCHERSTIFT D.8X45 ZN	PASADOR DE SEGURIDAD D 8X45 ZN
2	F01200306	DADO M14X 2 U5588 6.8 ZN	NUT M14X2	ECROU M14X2	MUTTER M14X2	DADO M14X2
3	G19003000	TAPPO PER TELAIO 150	CAP FOR FRAME 150	BOUCHON POUR BATI 150	PFROPFEN FOR RAHMEN 150	TAPON PARA BASTIDOR 150
4	F01020233	VITE M14X 2X200 U5737 8.8 BR	SCREW M14X 2X200 U5737 8.8 ZB	VIS M14X2X 200 U5737 8.8 ZB	SCHRAUBE M14X 2X200 U5737 8.8	TORNILLO M14X2X200 5737 8.8 ZB
5	G13812311	CATENELLA CON MOSCHETTONE	CHAIN WITH SPRING CATCH	CHAINETTE AVEC MOUSQUETON	KETTE MIT KARABINERHAKEN	CADENA CON GANCHO
6	F02200507	SPINA SCATTO D. 9 B/83 ZN	SNAP PIN D 9 B/83	FICHE A DETENTE D 9 B/83	EINRASTSTIFT D 9 B/83	CLAVIJA DE MUELLE D 9 B/83
7	F20100062	SPINA GASPARDO 25X128 ZN	3RD POINT PIN	GOUJON 3EME POINT	BOLZEN 3. PUNKT	PERNO 3 PUNTO
8	G15212940	TUBO Q.150X 8X5200				
9	G15212930	ASS.PROLUNGA TELAIO L.290				
10	G15112711	SUPPORTO PUNTELLO	PROP SUPPORT	SUPPORT ETRESILLON	STsTZLAGER	STsTZLAGER
11	G15212160	ASS.PERNO BLOCCAGGIO RUOTA				
12	F02200246	COPIGLIA 6X 45 U1336 ZN	SPLIT PIN 6 X45 1336 GALVAN.	GOUPILLE 6 X45 1336 ZN	SPLINT 6 X45 1336 ZN	PASADOR 6 X45 1336 ZN
13	F02200584	SPINA SICUR. D. 12X70 ZN	GALVAN. SAFETY PIN D.12X70	GOUPILLE DE S+CURIT+ D.12X70 Z	SCHERSTIFT D.12X70 ZN	PASADOR DE SEGURIDAD D 12X70 Z
14	G15112691	PUNTELLO ST250	PROP ST250	ETRESILLON ST250	STsTZE ST250	PUNTAL ST250
15	G15113070	FORCELLA 1-2 PUNTO 2 CAT.	FORK 1-2 POINT 2 CAT.	FOURCHETTE 1-2 PUNTO 2 CAT.	GABEL 1-2 PUNKT 2 KAT.	HORQUILLA 1-2 PUNTO 2 CAT.
16	G15211770	TERZO PUNTO RINF.150	THIRD POINT REINFORCEMENT 150	TROISIEME POINT RENFORCE	DRITTER PUNKT VERSTZRKT	TERCER PUNTO REF.
17	G19204030	SCONTRO FISS.150 2F D15				
18	G15113090	SPINA 1-2 PUNTO ZN	PIN 1.-2. POINT	BROCHE 1-2. POINT	STIFT 1-2. PUNKT	CLAVIJA 1-2. PUNTO
19	F20100078	PERNO D28 L93 C43 ZN	PIN D.28	GOUJON D.28	BOLZEN D.28	PERNO D.28
20	G15213060	TERZO PUNTO TERZA CAT.RID.				
21	F20100101	PERNO D32 L128 C43 ZN	PIN GASPARDO 32X134 ZN	BROCHE GASPARDO 32X134 ZN	STIFT GASPARDO 32X134 ZN	CLAVIJA GASPARDO 32X134 ZN
22	F20100112	PERNO D36 L128 C43 ZN	GASPARDO PIN 36X134 ZG	BROCHE GASPARDO 36X134 ZG	STIFT GASPARDO 36X134 ZG	CLAVIJA GASPARDO 36X134 ZG
23	G18701810	RONDELLA 38X70X10	WASHER 38X70X10	RONDELLE 38X70X10	UNTERLEGSCHEIBE 38X70X10	ARANDELA 38X70X10

TAV. 22

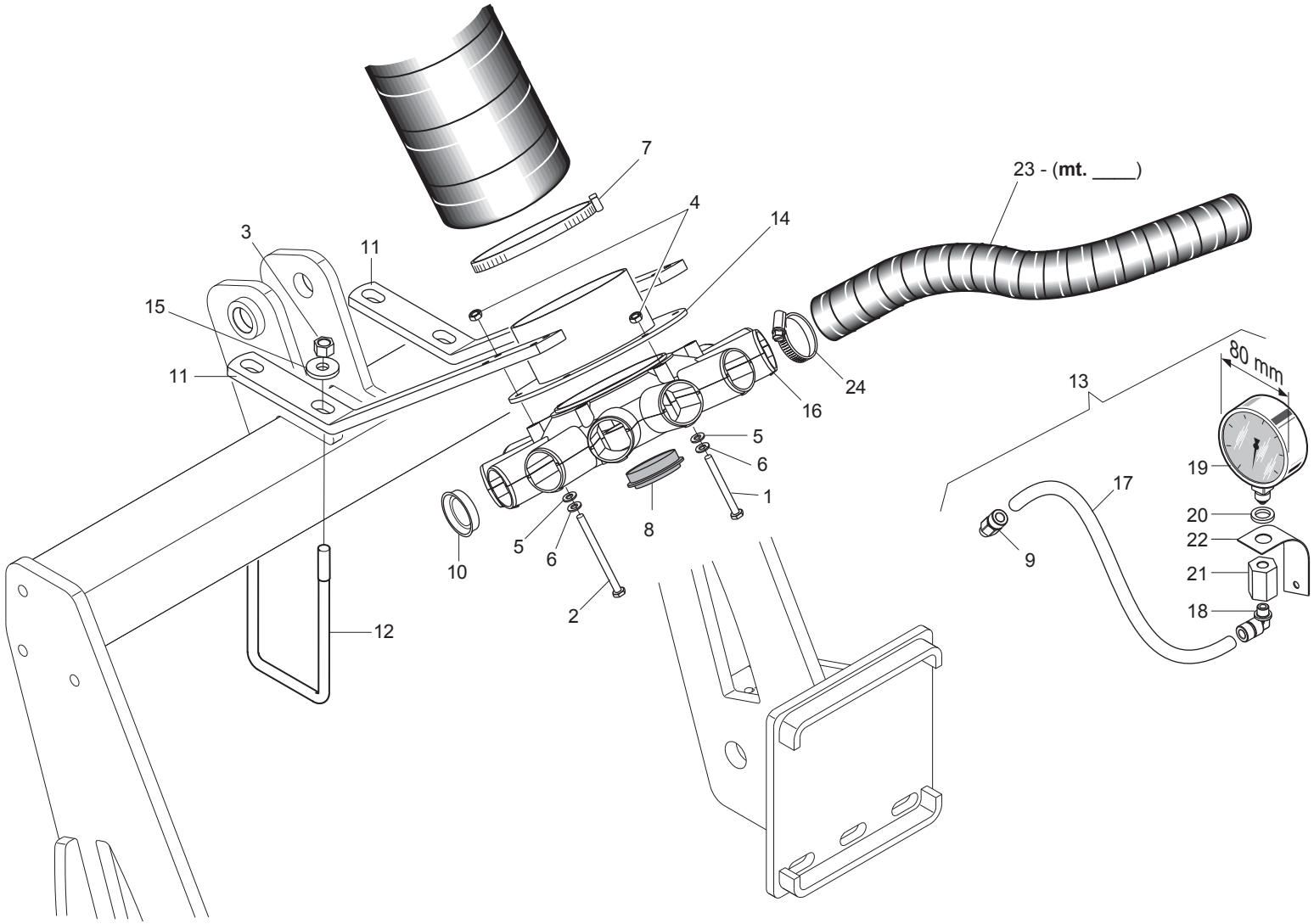

GASPARDO

DISTRIBUTORE ARIA

TAV. 22

Pos.	Cod.	Descrizione	Description	Description	Benennung	Descripcion
1	F01020050	VITE M 6X 1X 80 U5737 8.8 ZN	BOLT 6 X80 5737 8.G GALVANIZED	VIS 6 X80 5737 8.G ZN	SCHRAUBE 6 X80 5737 8.G ZN	TORNILLO 6 X80 5737 8.G ZN
2	F01020051	VITE M 6X 1X 90 U5737 8.8 ZN	BOLT 6X90 5737 8.G GALVANIZED	VIS 9X90 5737 8.G ZN	SCHRAUBE 6X90 5737 8.G ZN	TORNILLO 6X90 5737 8.G ZN
3	F01200306	DADO M14X 2 U5588 6.8 ZN	NUT M14X2	ECROU M14X2	MUTTER M14X2	DADO M14X2
4	F01220011	DADO M 6X 1 D980 8 ZN	SELF LOCKING NUT M6	ECROU AUTOBL. M6	SELBSTSPERR.MUTTER M6	DADO AUTOBL. M6
5	F01420036	ROS.M6 6,4X 18X 2 U6593 ZN	FLAT WASHER 6-6X 18X2 6593 ZN	ROND. PLATE 6-6X 18X2 6593 ZN	SCHEIBE 6-6X 18X2 6593 ZN	ARAND. PLANA 6-6X 18X2 6593 ZN
6	F01430047	ROS.M6 6,4X 11X0,7 U8842J ZN	WASHER D6 DIN 6798 D.INT.GALV.	RONDELLE D6 DIN 6798 D. INT. Z	UNT. SCHEIBE D6 DIN 6798 D. IN	ARANDELA D6 DIN 6798 D.INT.ZN
7	F02300031	FASCETTA STRING.130/150 H.12				
8	F03150722	TAPPO 700 M52X2	M52 X 2 PLUG	BOUCHON M52 X 2	PFROPFEN M52 X 2	TAPN M52 X 2 D
9	F03151206	RACCORDO DIR. C1 1/8' 6/8	UNION STRAIGHT C1 1/8" 6/8	RACCORD DRT. C1 1/8" 6/8	ANSCHLUSSTsCK GERADE C1 1/8"	UNIN DER. C1 1/8" 6/8 R
10	F05050020	TAPPO SALVAFILETTO D.39	CONVEYOR PLUG D.39	BOUCHON PROTEGE-FILET D. 39	GEWINDESCHUTZPFROPFEN D.39	TAPN GUARDARROSCA D.39 D
11	G15250140	SUPPORTO				
12	F20110770	CAV.Q.M14X 2X 50 96X119 ZN	U-BOLT M14X96 - 119 ZN	CAVALIER M14X96 - 119 ZN	VERBINDUNG M14X96 - 119 ZN	PERNO EN U M14X96 - 119 ZN
13	G22270093	VACUOMETRO COMPL. SP LM	VACUUM METER ASSY. SP LM	VACUOMETRE COMPL. SP LM	KOMPL. VAKUUMMETER SP LM	VACUMETRO COMPL. SP LM V
14	G15250131	ASS.FLANGIA				
15	G20970142	RONDELLA 32X4X15,5	WASHER 32X4X15-5	RONDELLE 32X4X15-5	UNTERLEGSCHEIBE 32X4X15-5	ARANDELA 32X4X15-5
16	G15450450	CONVOGLIATORE 12 USCITE *				
17	F03100391	TUBO POLIURETANO 8-6	POLIURETHAN PIPE 8-6			
18	F03151200	RACCORDO 90° C5 1/8' 6/8	UNION 90[C5 1/8" 6/8	RACCORD 90[C5 1/8" 6/8	ANSCHLUSSTsCK 90[C5 1/8' 6/8	UNIN 90 C5 1/8" 6/8 RA
19	F03151288	VACUOM.0-100 MBAR C.SM.INC.D80				
20	F05150479	ROND.APPOGGIO MANOMETRI SV	PRESSURE GAUGE REST WASHER	ROND. LOGEMENT MANOMETRES SV	STsTZSCHEIBE MANOMETER SV	ARAND. SOPORTE MANOMETROS SV
21	G22250274	COLLEGAMENTO MANOMETRI SP-SV	PRESSURE GAUGE CONNECT. SP-SV	RACCORD MANOMETRES SP-SV	VERBINDUNG MANOMETER SP-SV	CONEXIN MANMETROS SP-SV LE
22	G22270134	SUPPORTO VACUOMETRO SP	VACUUM METER SUPPORT SP	SUPPORT VACUOMETRE SP	HALTERUNG VAKUUMMETER SP	SOPORTE VACUMETRO SP S
23	F03100506	TUBO EOLO PU D.45	EOLO PIPE 45 PU			
24	F05150058	FASCETTA POLYAM.7,8X550 31920	POLYAMIDE FASTENING STRAPS 9X5	COLLIER POLYAMIDE 9X508 31920	SCHELLE POLYAMID 9X508 31920	ABRAZADERA POLIAMIDA 9X508 319

TAV. 32

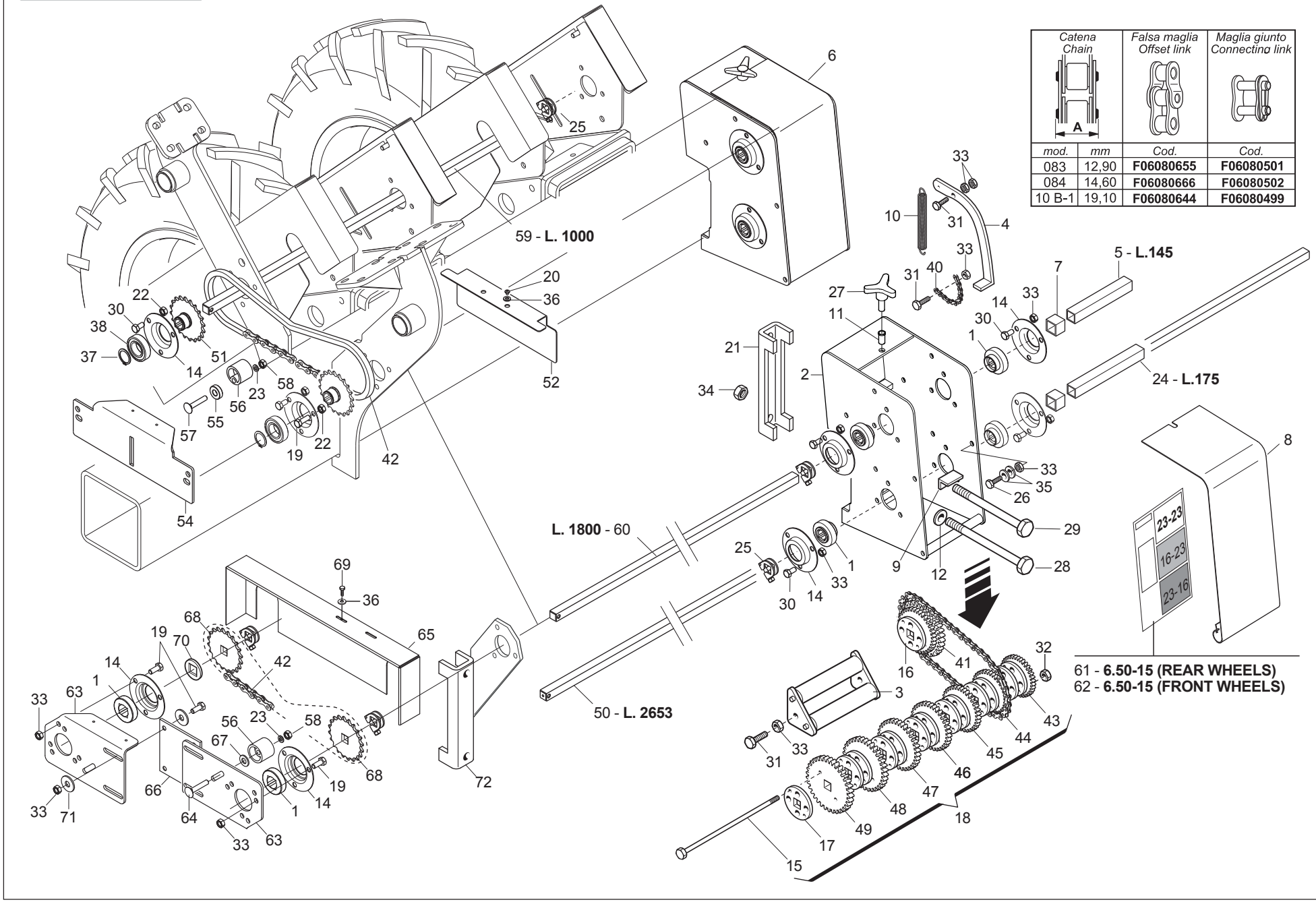

Catena Chain		Falsa maglia Offset link	Maglia giunto Connecting link
mod.	mm	Cod.	Cod.
083	12,90	**F06080655**	**F06080501**
084	14,60	**F06080666**	**F06080502**
10 B-1	19,10	**F06080644**	**F06080499**

GASPARDO

TRASMISSIONE CAMBIO

TAV. 32

Pos.	Cod.	Descrizione	Description	Description	Benennung	Descripcion
1	G14830390	CUSCINETTO FORO QUADRO	SQUARE-HOLED BEARING	ROULEMENT AL+SAGE CARR+	VIERKANTLAGER	COJINETE ORIFICIO CUADRADO
2	G16630840	ASS.SCATOLA CAMBIO Q.150				
3	G15430321	RULLO TENDICATENA	CHAIN STRETCHER ROLLER	ROULEAU TENDEUR DE CHAINE	KETTENSPANNROLLE	RODILLO TENSOR DE CADENA
4	G15430331	LEVA CAMBIO	GEAR LEVER	LEVIER BOITE DE VITESSE	GETRIEBEHEBEL	PALANCA DE CAMBIO
5	G15430340	ASSE INGRANAGGI L.155	GEAR SPINDLE L.155	AXE ENGRENAGES L155	ACHSE ZAHNRZDER L.122	EJE ENGRANAJES L.155
6	G16630010	SCATOLA CAMBIO Q.150 COMPL.	GEARBOX 150	BOITE DE VITESSE 150	GETRIEBEKASTEN 150	CAJA DE CAMBIO DE VELOCIDAD 15
7	G15430501	DISTANZIALE INTERNO CAMBIO	GEARBOX INNER SPACER	ENTRETOISE INT. BOITE VITESSE	INNERES DISTANZSTsCK GETRIEBE	DISTANCIADOR INTERIOR CAMBIO
8	G15430711	COPERCHIO CAMBIO	GEAR COVER	COUVERCLE BOITE DE VITESSE	GETRIEBEDECKEL	TAPA CAMBIO
9	G15431020	FERMO VITE CAMBIO	GEAR SCREW STOP	ARRET VIS BOITE DE VITESSE	FESTSTELLVORRICH. GETRIEBESCHR	BLOQUEO TORNILLO
10	G18902970	MOLLA TRAZ.CAMBIO ZN SP	GALVAN. GEAR TRACT. SPRING SP	RESS. TRACT. BOITE VITESSE ZN	ZUGFEDER GETRIEBE ZN SP	MUELLE TRAC. CAMBIO ZN SP
11	F02250683	INSERTO FIL.M 8X17,5 ZN T.TOND	CYLINDRICAL NUT 8 TC 40	ECROU CYLINDRIQUE 8 TC 40	ZYLINDRISCHE MUTTER 8 TC 40	TUERCA CILINDRICA 8 TC 40
12	G20970142	RONDELLA 32X4X15,5	WASHER 32X4X15-5	RONDELLE 32X4X15-5	UNTERLEGSCHEIBE 32X4X15-5	ARANDELA 32X4X15-5
13	G22220085	SNODO	ARTICULATION	ARTICULATION	GELENK	ARTICULACIN A
14	G22230094	SUPPORTO CUSCINETTO	BEARING SUPPORT	SUPPORT PALIER	LAGERBsCHSE	SOPORTE COJINETE
15	G19203260	VITE M5X115 ZN	BOLT M5X115 ZN	VIS M5X115 ZN	SCHRAUBE M5X115 ZN	TORNILLO M5X115 ZN
16	G22270152	ING.Z 16-23 RUOTA-CAMBIO SP	WHEEL- GEARBOX GEARS SP	ENGR. Z 16-23 ROUE BOITE VIT.	ZAHNRAD Z 16-23 GETRIEBERAD SP	ENGRAN. Z 16-23 RUEDA-CAMBIO
17	G22270162	RINFORZO INGR.ASSE DA 20 SP	AXLE GEAR REINFORCEMENT 20 SP	RENFORC. ENGREN. AXE DE 20 SP	VERSTZRKUNG ACHSZAHNRAD 20 SP	REFUERZO ENGRAN. EJE DE 20 SP
18	G22270163	BLOCCO CAMBIO ASSE DA 20 SP	20 CM SPINDLE GEARBOX SP	ENSEMBLE BOITE DE VITESSE	GETRIEBEBLOCK ACHSE 20 SP	BLOQUE CAMBIO EJE DE 20 SP
19	F01020436	VITE M 8X1,25X 20 U5739 8.8 ZN	BOLT M 8X20	VIS M 8X20	SCHRAUBE M 8X20	TORNILLO M 8X20
20	F01070078	VIT.A.4,2X1,41X 13 6950 4.8ZN	SELFTHREADING BOLT 4,2X13 TE	VIS AUTOTARADEUSE.4-2X13 TE	SELBSTSCHNEID. SCHRAUBE 4-2X13	TORNILLO AUTOR.4-2X13 TE
21	G15110091	SCONTRO A U	STRIKER	BRIDE 150 MM	ANSCHLAG	ELEMENTO DE EMPALME
22	F01220022	DADO M 8X1,25 D980 8 ZN	SELF LOCKING NUT M8X1,25 980V	ECROU AUTOBL. M8X1,25 980-V	SELBSTSP.MUTT. M8X1,25 980-V	DADO AUTOBL. M8X1,25 980-V
23	F01420048	ROS.M8 8,4X 24X 2 U6593 ZN	PLANE WASHER D.8	RONDELLE D.8	SCHEIBE D.8	ARANDELA D.8
24	G22500171	MANICOTTO L.175	SLEEVE L.175	MANCHON L.175	MUFFE L.175	MANGUITO L.175
25	G14830360	MONT.FERMO DI LAMIERA				
26	F01060040	BUL.M 8X1,25X 20 U5732 4.6 ZG	BOLT 8 X20 5732 4.6 GALVANIZED	VIS 8 X20 5732 4.6 ZN	SCHRAUBE 8 X20 5732 4.6 ZN	TORNILLO 8 X20 5732 4.6 ZN
27	F06220018	VOLANTINO 3LOBI D.65-M8X15	3-LOBE HANDWHEEL D.65-M8X15	VOLANT 3 LOBES D.65-M8X15	HANDRAD 3 BUCKEL D.65-M8X15	VOLANTE 3 LOBI D.65-M8X15
28	F01020225	VITE M14X 2X160 U5737 8.8 BR	BOLT M 14 X160 5737 8.G	VIS M 14 X160 5737 8.G	SCHRAUBE M 14 X160 5737 8.G	TORNILLO M 14 X160 5737 8.G
29	F01020232	VITE M14X 2X200 U5737 8.8 ZN	BOLT 14X200 5737 8.G GALVANIZ.	VIS 14X200 5737 8.G ZN	SCHRAUBE 14X200 5737 8.G ZN	TORNILLO 14X200 5737 8.G ZN
30	F01020432	VITE M 8X1,25X16 U5739 8.8 ZN	BOLT M 8X16	VIS M 8X16	SCHRAUBE M 8X16	TORNILLO M 8X16
31	F01020449	VITE M 8X1,25X35 U5739 8.8 ZN	BOLT M 8X35	VIS M 8X35	SCHRAUBE M 8X35	TORNILLO M 8X35
32	F01200220	DADO M 5X 0,8 U5588 6.8 ZN	NUT 5 UNI 5588 6.8 GALVANIZED	ECROU 5 UNI 5588 6.8 ZN	MUTTER 5 UNI 5588 6.8 ZN	TUERCA 5 UNI 5588 6.8 ZN
33	F01200244	DADO M 8X1,25 U5588 6.8 ZN	NUT M8	ECROU M8	MUTTER M8	DADO M8
34	F01200306	DADO M14X 2 U5588 6.8 ZN	NUT M14X2	ECROU M14X2	MUTTER M14X2	DADO M14X2
35	F01410051	ROS.M8 8,4X 17X1,6 U6592 ZN	PLANE WASHER D.8	RONDELLE D.8	SCHEIBE D.8	ARANDELA D.8
36	F01420011	ROS.M4 4,3X 16X 1 U6593 ZN	FLAT WASHER 4-3X 16X1-5 6593 G	ROND.PLATE 4-3X 16X1-5 6593 ZN	SCHEIBE 4-3X 16X1-5 6593 ZN	ARAND. PLANA 4-3X 16X1-5 6593
37	F02050101	ANELLO E. DE 25X 1,2 U7435 C70	SEEGER RING E. 25X1,2 7435 C70	SEEGER E. 25X 1,2 U7435 C70	SEEGERING E. 25X 1,2 U7435 C70	ANILLO E. 25X 1,2 U7435 C70
38	F04010135	CUSC.D25 D47 B12 6005 2RS EX>				
39	F02100087	SPINA E.P. 5X 30 U6873 C70 BR	PIN EL. 5 X30 DIN 1481	FICHE EL. 5 X30 DIN 1481	SPANNSTIFT 5 X30 DIN 1481	CLAVIJA EL.5 X30 DIN 1481
40	F06080008	CATENA 1/2 ISO 083 16 MAGLIE	CHAIN SECTION 1/2-3/16 16 MES	TRONÃON CHA+NE 1/2-3/16 16 MAI	KET.ABSCHN.1/2-3/16 16 GLIEDER	TRAMO CAD.1/2-3/16 16 ESLABONE
41	F06080230	CATENA 5/8 ISO 10B 46 MAGLIE	CUT-DOWN CHAIN .ISO 10B-1 46-L	TRONCON CHAINE ISO 10B-1 46 MA	KETTENLZNGE ISO 10B-1 46 GLIE	TRECHO CADENA ISO 10B-1 46 ESL
42	F06080038	CATENA 1/2 ISO 083 74 MAGLIE	CHAIN 1/2 ISO 083 74 LINKS	CHAINE 1/2 ISO 083 74 MAILLES	KETTE 1/2 ISO 083 94 GLIEDER	CADENA 1/2 ISO 083 74 ESLABNEL
43	G66248162	INGRANAGGIO Z-17 SP	GEAR Z-17 SP	ENGRENAGE Z-17 SP	ZAHNRAD Z-17 SP	ENGRANAJE Z-17 SP
44	G66248163	INGRANAGGIO Z-18 SP	GEAR Z-18 SP	ENGRENAGE Z-18 SP	ZAHNRAD Z-18 SP	ENGRANAJE Z-18 SP
45	G66248164	INGRANAGGIO Z-19 SP	GEAR Z-19 SP	ENGRENAGE Z-19 SP	ZAHNRAD Z-19 SP	ENGRANAJE Z-19 SP
46	G66248165	INGRANAGGIO Z-20 SP	GEAR Z-20 SP	ENGRENAGE Z-20 SP	ZAHNRAD Z-20 SP	ENGRANAJE Z-20 SP
47	G22270159	INGR. Z-21 ASSE DA 20 SP*				
48	G66248167	INGRANAGGIO Z-22 SP	GEAR Z-22 SP	ENGRENAGE Z-22 SP	ZAHNRAD Z-22 SP	ENGRANAJE Z-22 SP
49	G66248168	INGRANAGGIO Z-23 SP	GEAR Z-23 SP	ENGRENAGE Z-23 SP	ZAHNRAD Z-23 SP	ENGRANAJE Z-23 SP
50	G14230710	ASSE TRASM.L.2653				
51	G15231961	PIGNONE Z20 1/2-3/16 Q.16,4 ZN				
52	G15275370	CARTER				
53	F01200293	DADO M12X1,75 U5588 6.8 ZN	NUT M12	ECROU M12	MUTTER M12	DADO M12
54	G15275380	SUPPORTO TRASMISSIONE				

TAV. 32

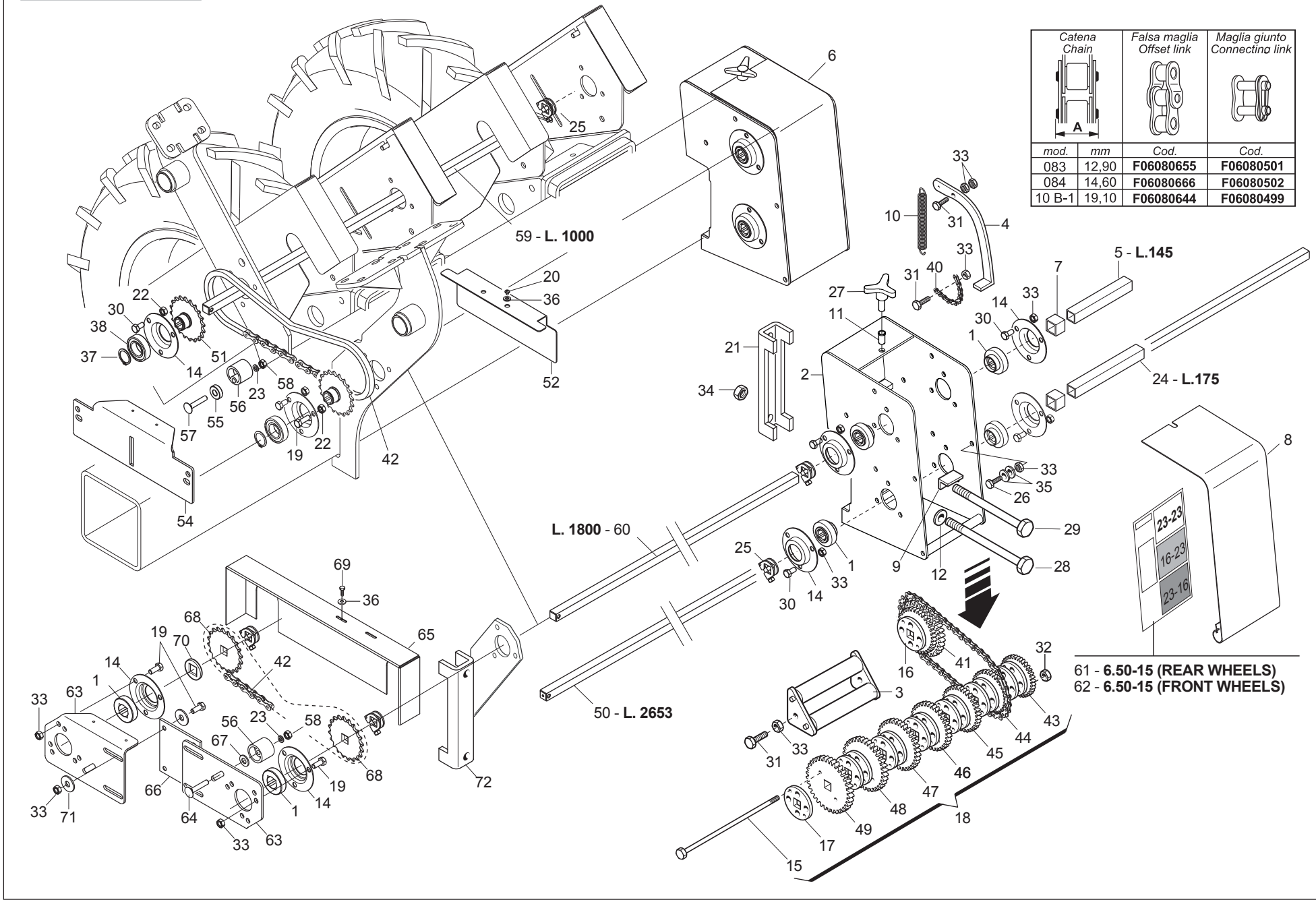

Catena Chain		Falsa maglia Offset link	Maglia giunto Connecting link
mod.	mm	Cod.	Cod.
083	12,90	**F06080655**	**F06080501**
084	14,60	**F06080666**	**F06080502**
10 B-1	19,10	**F06080644**	**F06080499**

GASPARDO

TRASMISSIONE CAMBIO

TAV. 32

Pos.	Cod.	Descrizione	Description	Description	Benennung	Descripcion
55	G18801680	BOCCOLA 11 X25 X7,5 ZN	BUSHING 11X25X7,5 GALVA	BOITE 11X25X7,5 ZN	BsCHSE 11X25X7,5 ZN	CASQUILLO 11X25X7,5 ZN
56	G66248207	TENDICATENA SPAND. SP-520	CHAIN TENSIONER	TENDEUR DE CHAINE EPAND. ENGR.	KETTENSPANNER DsNGERSTR. SP-52	TENSOR DE CADENA ABON. SP-520
57	F01060050	BUL.M 8X1,25X 55 U5732 4.6 ZN	BOLT 8 X55 5732 4.6 GALVANIZED	VIS 8 X55 5732 4.6 ZN	SCHRAUBE 8 X55 5732 4.6 ZN	TORNILLO 8 X55 5732 4.6 ZN
58	F01060047	BUL.M 8X1,25X 45 U5732 4.6 ZN	BOLT 8X45 5732 4.6 GALVANIZED	VIS 8X45 5732 4.6 ZN	SCHRAUBE 8X45 5732 4.6 ZN	TORNILLO 8X45 5732 4.6 ZN
59	G22230138	ASSE CAMBIO 4F.80-6F.45 L.1000	GEAR SPINDLE 4-ROW 80- 6-ROW.4	AXE BOITE DE VITESSE 4 RA	GETRIEBEACHSE 4 R. 80-6 R.45 L	EJE CAMBIO 4 FILAS. 80-6 FILAS
60	G20870028	ASSE SERB.LATO TRAS.6F.L.1800	AXLE- GEARBOX SIDE- 6-ROW L.18	AXE RESERVOIR COTE ENTRAINEMEN	ACHSE BEHZLTER ANTRIEBSS. 6F.L	EJE DEPS. LADO TRANS. 6 FILA A
61	G19701412	DECAL.CAMBIO RUOTA 6,50-15	GEARBOX WHEEL 6,50-15 STICKER	ETIQ. BOITE DE VIT. ROUE 6,50-	AUFKLEBER GETRIEBE RAD 6,50-15	CAL. CAMBIOVEL. RUEDA 6,50-15
62	G19703161	DECAL.CAMBIO RUOTA 6,50-15 EST	GEARBOX WHEEL 6,50-15 STICKER	ETIQ. BOITE DE VIT. ROUE 6,50-	AUFKLEBER GETRIEBE RAD 6,50-15	CAL. CAMBIOVEL. RUEDA 6,50-15
63	G15470851	FIANCO SUPP.TRASM.SPANDI	SPREADER TRANSM. SIDE SUPPORT	COTE SUPPORT TRANSM. EPAND.	SEITEN HALTER. ANTRIEB DUNGERS	COSTADO SOPORTE TRANSM. ABONAD
64	F01060047	BUL.M 8X1,25X 45 U5732 4.6 ZN	BOLT 8X45 5732 4.6 GALVANIZED	VIS 8X45 5732 4.6 ZN	SCHRAUBE 8X45 5732 4.6 ZN	TORNILLO 8X45 5732 4.6 ZN
65	G15473080	CARTER RINVIO DA ANT.A POST.	INTERMEDIATE CASE	CARTER TRANSMISSION	VORGELEGEGEHZUSE	CµRTER TRANSMISIN C
66	G15272470	PIASTRA PROLUNGA TRASM.SPAND.	TRANSMISSION EXTENSION PLATE	PLAQUE RALL. TRANSMISSION	VERL.PLATTE GETRIEBE	PLACA PROL. TRANSMISIËN
67	F01420060	ROS.M10 10,5X 30X2,5 U6593 ZN	WASHER 10,5X30	RONDELLE 10,5X30	SCHEIBE 10,5X30	ARANDELA 10,5X30
68	G20910039	INGRANAGGIO SUP.Z-20 FERRO *				
69	F01070074	VIT.A.4,2X1,41X 25 6954 4.8NI	BOLT 4-2X25 DIN 7981	VIS 4-2X25 DIN 7981	SCHRAUBE 4-2X25 DIN 7981	TORNILLO 4-2X25 DIN 7981
70	G18701650	RONDELLA FORO QUADRO ZN	WASHER 16,5X30X2,5 ZN	RONDELLE 16,5X30X2,5 ZN	UNTERLEGSCHEIBE 16,5X30X2,5 ZN	ARANDELA 16,5X30X2,5 ZN
71	G66248218	RONDELLA DISTAN.SPAND.	MAN. SPR. SPACER WASHER	RONDELLE ENTRETOISE EP. ENGRAI	ABSTANDSCHEIBE DsNGERSTREUER	ARANDELA DISTAN.ABONAD.
72	G15470381	SUPPORTO RINVIO TUBO 150	TRANSM. SUPPORT FOR PIPE 150	SUPPORT RENVOI POUR TUBE 150	HALTERUNG VORGELEGE ROHR 150	SOPORTE TRANSMISION TUBO 150

TAV. 42

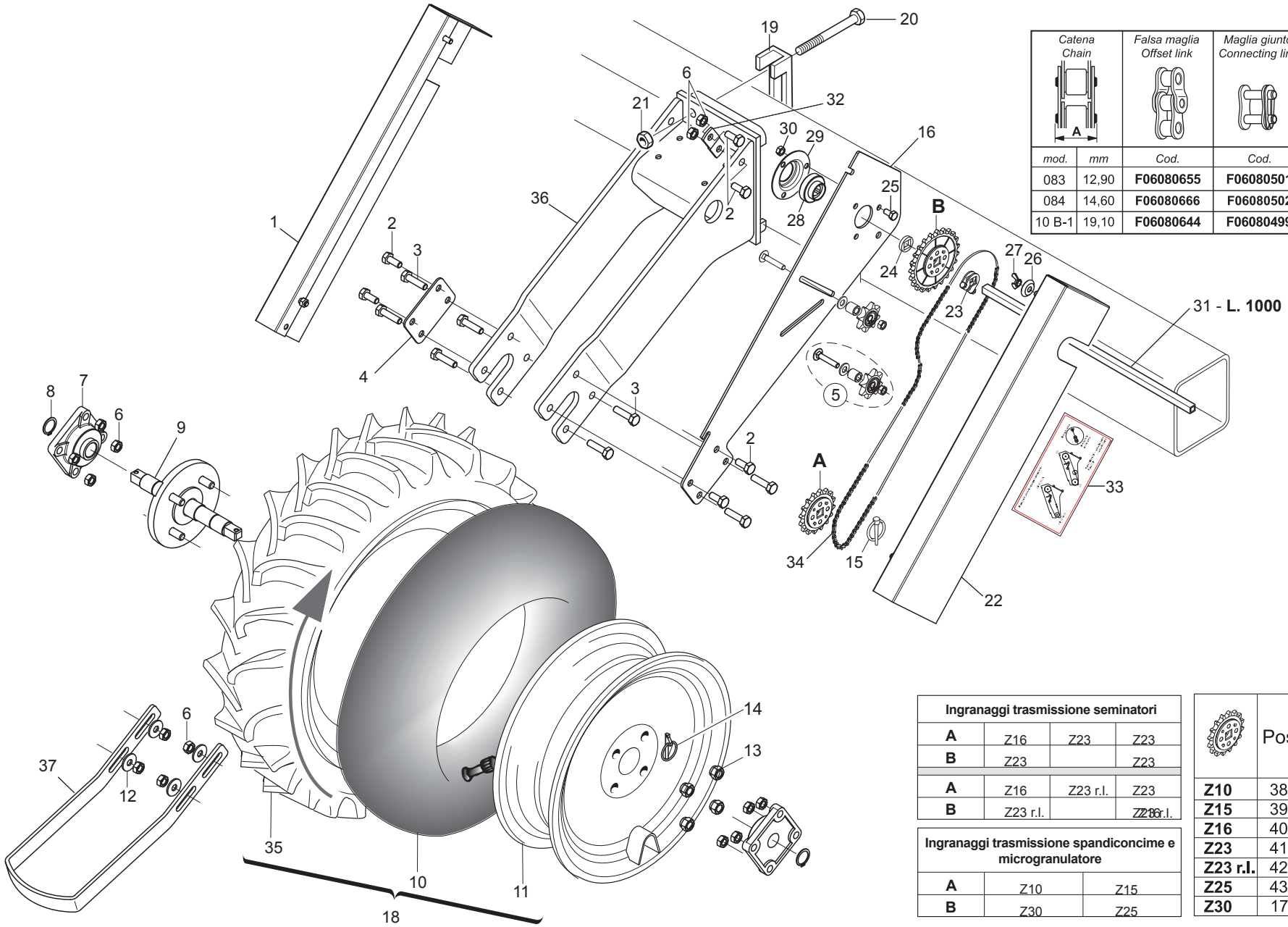

Catena Chain		Falsa maglia Offset link	Maglia giunto Connecting link
mod.	mm	Cod.	Cod.
083	12,90	**F06080655**	**F06080501**
084	14,60	**F06080666**	**F06080502**
10 B-1	19,10	**F06080644**	**F06080499**

Ingranaggi trasmissione seminatori			
A	Z16	Z23	Z23
B	Z23		Z23
A	Z16	Z23 r.l.	Z23
B	Z23 r.l.		Z23 r.l.

Ingranaggi trasmissione spandiconcime e microgranulatore		
A	Z10	Z15
B	Z30	Z25

	Pos.
Z10	38
Z15	39
Z16	40
Z23	41
Z23 r.l.	42
Z25	43
Z30	17

GASPARDO

TRASMISSIONE RUOTE

TAV. 42

Pos.	Cod.	Descrizione	Description	Description	Benennung	Descripcion
1	G16630360	CARTER SX	LEFT CASE	CARTE GCH	GEHZUSE LI	CARTER IZQ
2	F01020472	VITE M10X 1,5X25 U5739 8.8 ZN	BOLT 10X25 5739 8.G GALVANIZED	VIS 10X25 5739 8.G ZN	SCHRAUBE 10X25 5739 8.G ZN	TORNILLO 10X25 5739 8.G ZN
3	F01020481	VITE M10X 1,5X40 U5739 8.8 ZN	BOLT 10X40 5739 8.G GALVANIZED	VIS 10X40 5739 8.G ZN	SCHRAUBE 10X40 5739 8.G ZN	TORNILLO 10X40 5739 8.G ZN
4	G16630380	SCONTRO 100X70-3 4F11 70X40	STRIKER PLATE 100X70-3 4F	BUTEE 100X70-3 4F	ANSCHLAG 100X70-3 4F	ELEMENTO DE EMPALME 100X70-3 4
5	G16630810	KIT INGR.Z8 5/8"X3/8" CUSC.				
6	F01200270	DADO M10X 1,5 U5588 6.8 ZN	NUT M10	ECROU M10	MUTTER M10	DADO M10
7	F04100137	SUPPORTO FY 25 TF	SUPPORT FY 25 TF	SUPPORT FY 25 TF	HALTERUNG FY 25 TF	SOPORTE FY 25 TF
8	F02050101	ANELLO E. DE 25X 1,2 U7435 C70	SEEGER RING E. 25X1,2 7435 C70	SEEGER E. 25X 1,2 U7435 C70	SEEGERING E. 25X 1,2 U7435 C70	ANILLO E. 25X 1,2 U7435 C70
9	G22270281	ASSE RUOTA TRASM.MAGG. SP/S	INCREASED DRIVE WHEEL AXLE	AXE ROUE ENTRAINEMENT 6.50-15	RADACHSE sBERBEM. ANTRIEB SP/S	EJE RUEDA TRANS. SOBREDIMENS.
10	F06120135	CAMERA 15 T 340	CHAMBER 15 T 340	CHAMBRE 15 T 340	KAMMER 15 T 340	CAMARA 15 T 340
11	F06120207	CERCHIO 5J 15 H2 PV RAL 9001				
12	F01420060	ROS.M10 10,5X 30X2,5 U6593 ZN	WASHER 10,5X30	RONDELLE 10,5X30	SCHEIBE 10,5X30	ARANDELA 10,5X30
13	F01250040	DADO COLON. 12X1.5 ZN	COLUMN NUT M12X1.5 STUD BOLT	ECROU M12X1. 5 COLONNE	SCHRAUBBOLZENMUTTER M12X1.5	TUERCA 12X1.5 COLUMNA
14	F02200452	SPINA SCATTO D.4,4 B/80 ZN	SNAP PIN D.4-4 B/80	FICHE A DETENTE D. 4-4 B/80	EINRASTSTIFT D 4-4 B/80	CLAVIJA DE MUELLE D.4-4 B/80
15	F02200452	SPINA SCATTO D.4,4 B/80 ZN	SNAP PIN D.4-4 B/80	FICHE A DETENTE D. 4-4 B/80	EINRASTSTIFT D 4-4 B/80	CLAVIJA DE MUELLE D.4-4 B/80
16	G16630311	SUPPORTO TRASMISSIONE SP540				
17	G16630430	PIGNONE Z-30 ZN.	PINION Z-30 ZN.	PIGNON Z-30 ZN.	RITZE Z-30 ZN.	PINION Z-30 ZN.
18	F06120116	RUOTA 6.50/80-15 COMPL.	UPRIGHT- WIDE RUBBERED WHEEL	MONT. ROUE CAOUTCHOUT. LARG.	STZNDER BREITES GUMMIRAD	MONT.RUEDA DE GOMADA LARGA
19	G15110091	SCONTRO A U	STRIKER	BRIDE 150 MM	ANSCHLAG	ELEMENTO DE EMPALME
20	F01020236	VITE M14X 2X220 U5737 8.8 BR	SCREW M14X2X220 U5737 8.8 BR	VIS M14X2X220 U5737 8.8 BR	SCHRAUBE M14X2X220 U5737 8.8	TORNILLO M14X2X220 U5737 8.8
21	F01200306	DADO M14X 2 U5588 6.8 ZN	NUT M14X2	ECROU M14X2	MUTTER M14X2	DADO M14X2
22	G16630350	CARTER DX	RIGHT CASE	CARTER DRT	GEHZUSE RE	CARTER DER
23	G14830360	MONT.FERMO DI LAMIERA				
24	G66248218	RONDELLA DISTAN.SPAND.	MAN. SPR. SPACER WASHER	RONDELLE ENTRETOISE EP. ENGRAI	ABSTANDSCHEIBE DsNGERSTREUER	ARANDELA DISTAN.ABONAD.
25	F01020432	VITE M 8X1,25X16 U5739 8.8 ZN	BOLT M 8X16	VIS M 8X16	SCHRAUBE M 8X16	TORNILLO M 8X16
26	G22220083	RONDELLA AD IMBOCCO	LEAD-IN WASHER	RONDELLE EMBOUTIE	TRICHTERSCHEIBE	ARANDELA DE MUESCA
27	F01240024	DADO M 8X1,25 U5448 5.8 ZN	NUT 8 UNI 5448 5.8 ZN	ECROU 8 UNI 5448 5.8 ZN	MUTTER 8 UNI 5448 5.8 ZN	TUERCA 8 UNI 5448 5.8 ZN
28	G14830390	CUSCINETTO FORO QUADRO	SQUARE-HOLED BEARING	ROULEMENT AL+SAGE CARR+	VIERKANTLAGER	COJINETE ORIFICIO CUADRADO
29	G22230094	SUPPORTO CUSCINETTO	BEARING SUPPORT	SUPPORT PALIER	LAGERBsCHSE	SOPORTE COJINETE
30	F01220022	DADO M 8X1,25 D980 8 ZN	SELF LOCKING NUT M8X1,25 980V	ECROU AUTOBL. M8X1,25 980-V	SELBSTSP.MUTT. M8X1,25 980-V	DADO AUTOBL. M8X1,25 980-V
31	G22230138	ASSE CAMBIO 4F.80-6F.45 L.1000	GEAR SPINDLE 4-ROW 80- 6-ROW.4	AXE BOITE DE VITESSE 4 RA	GETRIEBEACHSE 4 R. 80-6 R.45 L	EJE CAMBIO 4 FILAS. 80-6 FILAS
32	G16630320	ATTACCO AL SUPPORTO RUOTA ZN	SUPP. WHEEL COUPLING	FIXATION SUPPORT ROUET	KUPPLUNG HALT. KL. RAD	CONEXIN SOP. RUEDECILLA
33	G19704690	DECAL.DISP.CATENE/INGR.R.POST.	STICKER	DECALCOMANIE	ABZIEHBILDER	CALCOMANIAS
34	F06080168	CATENA 5/8 ISO 10B 86 MAGLIE	CUT-DOWN CHAIN .ISO 10B-1 86 -	TRONCON CHAINE ISO 10B-1 86 MA	KETTENLZNGE ISO 10B-1 186 GLIE	TRECHO CADENA ISO 10B-1 86 ESL
35	F06120180	COPERTURA 6.5/80-15 IM 110 6PR	COVERING 6.5/80-15 IM 110 2PR	COUVERTURE 6.5/80-15 IM110 4PR	MANTEL .5/80-15 IM 110 2PR	CUBIERTA 6.5/80-15 IM 110 2PR
36	G16630300	SUPPORTO RUOTA 6,50/80-15	WHEEL SUPPORT 6,50/80-15	SUPPORT ROUE 6,50/80-15	RADLAGER 6,50/80-15	SOPORTE RUEDA 6,50/80-15
37	G15430660	RASCHIATERRA MAGGIORATO SP 530	INCREASED SOIL-SCRAPER SP 530	RACLEUR MAJOR. SP 530	sBERGROSSER ERDSCHABER SP 530	RASCADOR TIERRA OBREDIMENS. SP
38	G22220113	INGRANAGGIO Z-10 FERRO	GEAR Z-10 IRON	ENGRENAGE Z-10 FER	ZAHNRAD Z-10 EISEN	ENGRANAJE Z-10 HIERRO
39	G16630390	PIGNONE Z-15 ZN	PINION Z-15 ZN	PIGNON Z-15 ZN	RITZE Z-15 ZN	PINION Z-15 ZN
40	G16630400	PIGNONE Z-16 ZN.	PINION Z-16 ZN.	PIGNON Z-16 ZN.	RITZE Z-16 ZN.	PINION Z-16 ZN.
41	G16630410	PIGNONE Z-23 ZN.	PINION Z-23 ZN.	PIGNON Z-23 ZN.	RITZE Z-23 ZN.	PINION Z-23 ZN.
42	G16630370	INGRANAGGIO R.LIBERA Z-23 ZN	FREE WHEEL GEAR Z-23	ENGRENAGE Z-23 ROUE LIBRE	ZAHNRAD FREILAUF Z-23	ENGRANAJE R.LIBRE Z-23
43	G16630420	PIGNONE Z-25 ZN.	PINION Z-25 ZN.	PIGNON Z-25 ZN.	RITZE Z-25 ZN.	PINION Z-25 ZN.

TAV. 52

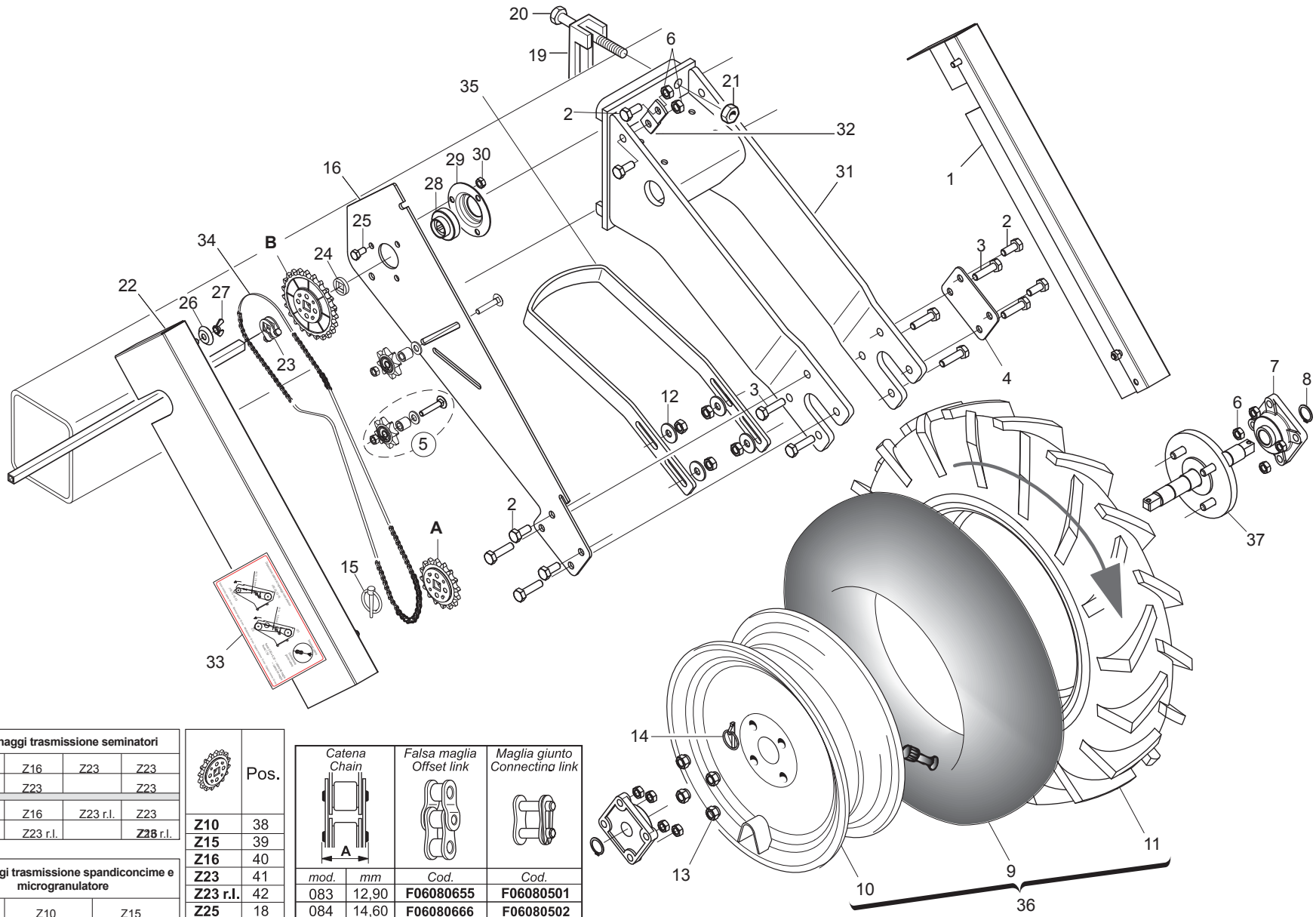

Ingranaggi trasmissione seminatori			
A	Z16	Z23	Z23
B	Z23		Z23
A	Z16	Z23 r.l.	Z23
B	Z23 r.l.		Z23 r.l.

Ingranaggi trasmissione spandiconcime e microgranulatore		
A	Z10	Z15
B	Z30	Z25

	Pos.
Z10	38
Z15	39
Z16	40
Z23	41
Z23 r.l.	42
Z25	18
Z30	17

Catena Chain		Falsa maglia Offset link	Maglia giunto Connecting link
mod.	*mm*	*Cod.*	*Cod.*
083	12,90	**F06080655**	**F06080501**
084	14,60	**F06080666**	**F06080502**
10 B-1	19,10	**F06080644**	**F06080499**

GASPARDO

TRASMISSIONE RUOTE ANTERIORI

TAV. 52

Pos.	Cod.	Descrizione	Description	Description	Benennung	Descripcion
1	G16630360	CARTER SX	LEFT CASE	CARTE GCH	GEHZUSE LI	CARTER IZQ
2	F01020472	VITE M10X 1,5X25 U5739 8.8 ZN	BOLT 10X25 5739 8.G GALVANIZED	VIS 10X25 5739 8.G ZN	SCHRAUBE 10X25 5739 8.G ZN	TORNILLO 10X25 5739 8.G ZN
3	F01020481	VITE M10X 1,5X40 U5739 8.8 ZN	BOLT 10X40 5739 8.G GALVANIZED	VIS 10X40 5739 8.G ZN	SCHRAUBE 10X40 5739 8.G ZN	TORNILLO 10X40 5739 8.G ZN
4	G16630380	SCONTRO 100X70-3 4F11 70X40	STRIKER PLATE 100X70-3 4F	BUTEE 100X70-3 4F	ANSCHLAG 100X70-3 4F	ELEMENTO DE EMPALME 100X70-3 4
5	G16630710	TENDICATENA CON VITE	CHAIN TENSIONER WITH SCREW			
6	F01200270	DADO M10X 1,5 U5588 6.8 ZN	NUT M10	ECROU M10	MUTTER M10	DADO M10
7	F04100137	SUPPORTO FY 25 TF	SUPPORT FY 25 TF	SUPPORT FY 25 TF	HALTERUNG FY 25 TF	SOPORTE FY 25 TF
8	F02050101	ANELLO E. DE 25X 1,2 U7435 C70	SEEGER RING E. 25X1,2 7435 C70	SEEGER E. 25X 1,2 U7435 C70	SEEGERING E. 25X 1,2 U7435 C70	ANILLO E. 25X 1,2 U7435 C70
9	F06120135	CAMERA 15 T 340	CHAMBER 15 T 340	CHAMBRE 15 T 340	KAMMER 15 T 340	CAMARA 15 T 340
10	F06120207	CERCHIO 5J 15 H2 PV RAL 9001				
11	F06120180	COPERTURA 6.5/80-15 IM 110 6PR	COVERING 6.5/80-15 IM 110 2PR	COUVERTURE 6.5/80-15 IM110 4PR	MANTEL .5/80-15 IM 110 2PR	CUBIERTA 6.5/80-15 IM 110 2PR
12	F01420060	ROS.M10 10,5X 30X2,5 U6593 ZN	WASHER 10,5X30	RONDELLE 10,5X30	SCHEIBE 10,5X30	ARANDELA 10,5X30
13	F01250040	DADO COLON. 12X1.5 ZN	COLUMN NUT M12X1.5 STUD BOLT	ECROU M12X1. 5 COLONNE	SCHRAUBBOLZENMUTTER M12X1.5	TUERCA 12X1.5 COLUMNA
14	F02200452	SPINA SCATTO D.4,4 B/80 ZN	SNAP PIN D.4-4 B/80	FICHE A DETENTE D. 4-4 B/80	EINRASTSTIFT D 4-4 B/80	CLAVIJA DE MUELLE D.4-4 B/80
15	F02200452	SPINA SCATTO D.4,4 B/80 ZN	SNAP PIN D.4-4 B/80	FICHE A DETENTE D. 4-4 B/80	EINRASTSTIFT D 4-4 B/80	CLAVIJA DE MUELLE D.4-4 B/80
16	G16630311	SUPPORTO TRASMISSIONE SP540				
17	G16630430	PIGNONE Z-30 ZN.	PINION Z-30 ZN.	PIGNON Z-30 ZN.	RITZE Z-30 ZN.	PINION Z-30 ZN.
18	G16630420	PIGNONE Z-25 ZN.	PINION Z-25 ZN.	PIGNON Z-25 ZN.	RITZE Z-25 ZN.	PINION Z-25 ZN.
19	G15110091	SCONTRO A U	STRIKER	BRIDE 150 MM	ANSCHLAG	ELEMENTO DE EMPALME
20	F01020236	VITE M14X 2X220 U5737 8.8 BR	SCREW M14X2X220 U5737 8.8 BR	VIS M14X2X220 U5737 8.8 BR	SCHRAUBE M14X2X220 U5737 8.8	TORNILLO M14X2X220 U5737 8.8
21	F01200306	DADO M14X 2 U5588 6.8 ZN	NUT M14X2	ECROU M14X2	MUTTER M14X2	DADO M14X2
22	G16630350	CARTER DX	RIGHT CASE	CARTER DRT	GEHZUSE RE	CARTER DER
23	G14830360	MONT.FERMO DI LAMIERA				
24	G66248218	RONDELLA DISTAN.SPAND.	MAN. SPR. SPACER WASHER	RONDELLE ENTRETOISE EP. ENGRAI	ABSTANDSCHEIBE DsNGERSTREUER	ARANDELA DISTAN.ABONAD.
25	F01020432	VITE M 8X1,25X16 U5739 8.8 ZN	BOLT M 8X16	VIS M 8X16	SCHRAUBE M 8X16	TORNILLO M 8X16
26	G22220083	RONDELLA AD IMBOCCO	LEAD-IN WASHER	RONDELLE EMBOUTIE	TRICHTERSCHEIBE	ARANDELA DE MUESCA
27	F01240024	DADO M 8X1,25 U5448 5.8 ZN	NUT 8 UNI 5448 5.8 ZN	ECROU 8 UNI 5448 5.8 ZN	MUTTER 8 UNI 5448 5.8 ZN	TUERCA 8 UNI 5448 5.8 ZN
28	G14830390	CUSCINETTO FORO QUADRO	SQUARE-HOLED BEARING	ROULEMENT AL+SAGE CARR+	VIERKANTLAGER	COJINETE ORIFICIO CUADRADO
29	G22230094	SUPPORTO CUSCINETTO	BEARING SUPPORT	SUPPORT PALIER	LAGERBsCHSE	SOPORTE COJINETE
30	F01220022	DADO M 8X1,25 D980 8 ZN	SELF LOCKING NUT M8X1,25 980V	ECROU AUTOBL. M8X1,25 980-V	SELBSTSP.MUTT. M8X1,25 980-V	DADO AUTOBL. M8X1,25 980-V
31	G16630300	SUPPORTO RUOTA 6,50/80-15	WHEEL SUPPORT 6,50/80-15	SUPPORT ROUE 6,50/80-15	RADLAGER 6,50/80-15	SOPORTE RUEDA 6,50/80-15
32	G16630320	ATTACCO AL SUPPORTO RUOTA ZN	SUPP. WHEEL COUPLING	FIXATION SUPPORT ROUET	KUPPLUNG HALT. KL. RAD	CONEXIN SOP. RUEDECILLA
33	G19704701	DECAL.CATENE/INGR.RUOTE ANT.	STICKER	DECALCOMANIE	ABZIEHBILDER	CALCOMANIAS
34	F06080168	CATENA 5/8 ISO 10B 86 MAGLIE	CUT-DOWN CHAIN .ISO 10B-1 86 -	TRONCON CHAINE ISO 10B-1 86 MA	KETTENLZNGE ISO 10B-1 186 GLIE	TRECHO CADENA ISO 10B-1 86 ESL
35	G15430660	RASCHIATERRA MAGGIORATO SP 530	INCREASED SOIL-SCRAPER SP 530	RACLEUR MAJOR. SP 530	sBERGROSSER ERDSCHABER SP 530	RASCADOR TIERRA OBREDIMENS. SP
36	F06120116	RUOTA 6.50/80-15 COMPL.	UPRIGHT- WIDE RUBBERED WHEEL	MONT. ROUE CAOUTCHOUT. LARG.	STZNDER BREITES GUMMIRAD	MONT.RUEDA DE GOMADA LARGA
37	G22270281	ASSE RUOTA TRASM.MAGG. SP/S	INCREASED DRIVE WHEEL AXLE	AXE ROUE ENTRAINEMENT 6.50-15	RADACHSE sBERBEM. ANTRIEB SP/S	EJE RUEDA TRANS. SOBREDIMENS.
38	G22220113	INGRANAGGIO Z-10 FERRO	GEAR Z-10 IRON	ENGRENAGE Z-10 FER	ZAHNRAD Z-10 EISEN	ENGRANAJE Z-10 HIERRO
39	G16630390	PIGNONE Z-15 ZN	PINION Z-15 ZN	PIGNON Z-15 ZN	RITZE Z-15 ZN	PINION Z-15 ZN
40	G16630400	PIGNONE Z-16 ZN.	PINION Z-16 ZN.	PIGNON Z-16 ZN.	RITZE Z-16 ZN.	PINION Z-16 ZN.
41	G16630410	PIGNONE Z-23 ZN.	PINION Z-23 ZN.	PIGNON Z-23 ZN.	RITZE Z-23 ZN.	PINION Z-23 ZN.
42	G16630370	INGRANAGGIO R.LIBERA Z-23 ZN	FREE WHEEL GEAR Z-23	ENGRENAGE Z-23 ROUE LIBRE	ZAHNRAD FREILAUF Z-23	ENGRANAJE R.LIBRE Z-23

TAV. 62

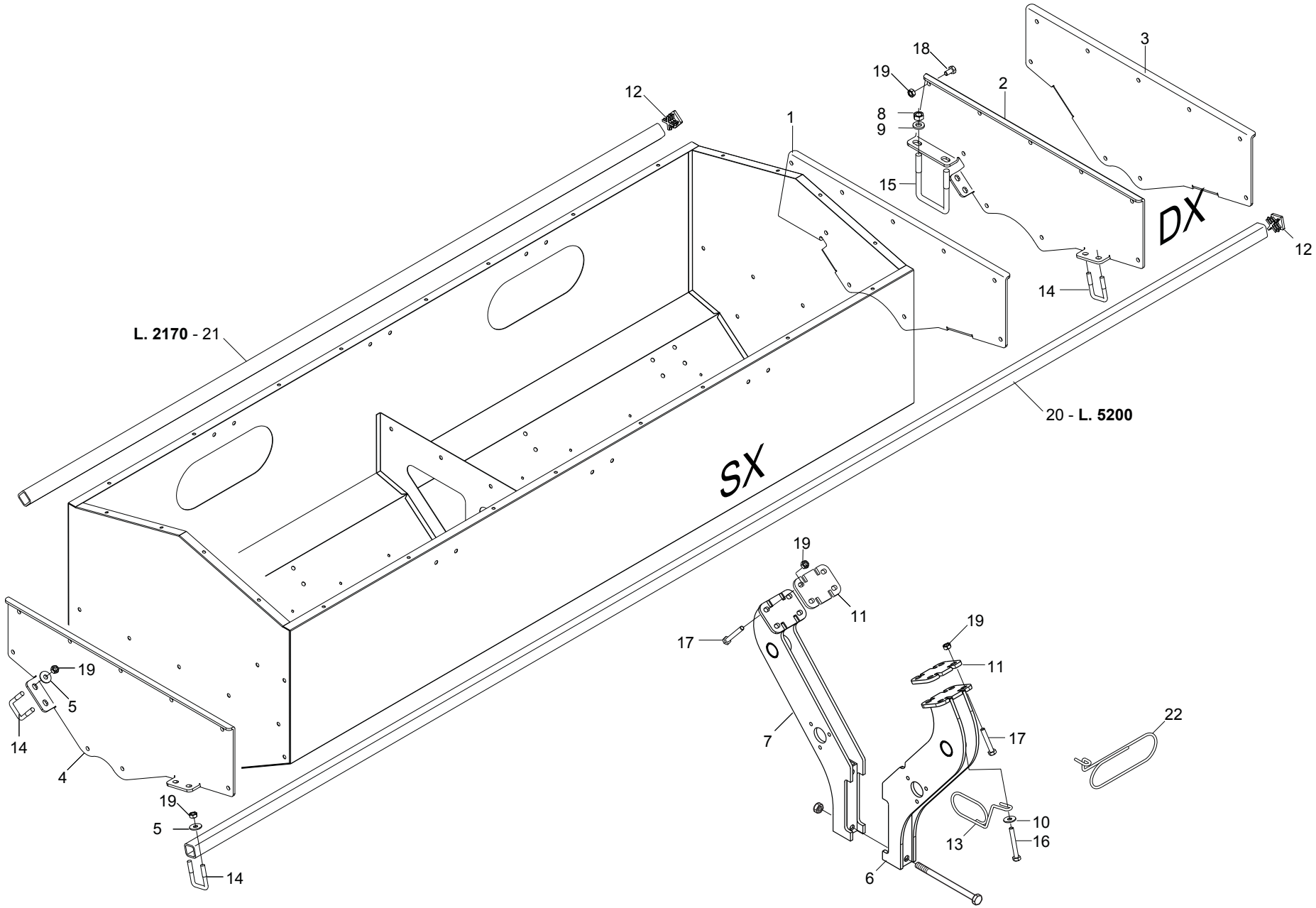

GASPARDO

SUPPORTI SERBATOI SPANDICONCIME

TAV. 62

Pos.	Cod.	Descrizione	Description	Description	Benennung	Descripcion
1	G15273322	FIANCO SUPP.INTERNO SX.				
2	G15273332	FIANCO SUPP.INTERNO DX.				
3	G15273341	FIANCO SUPP.ESTERNO DX				
4	G15273351	FIANCO SUPP.ESTERNO SX				
5	F01420059	ROS.M10 10,5X 30X2,5 U6593 IX	WASHER 11X30X2,5 6593 A2	RONDELLE 11X30X2,5 6593 A2	UNTERLEGSCHEIBE 11X30X2,5 6593	ARANDELA 11X30X2,5 6593 A2
6	G15273444	ASS.SUPP.POSTERIORE				
7	G15273472	SUPPORTO FRONTALE				
8	F01200306	DADO M14X 2 U5588 6.8 ZN	NUT M14X2	ECROU M14X2	MUTTER M14X2	DADO M14X2
9	G20970142	RONDELLA 32X4X15,5	WASHER 32X4X15-5	RONDELLE 32X4X15-5	UNTERLEGSCHEIBE 32X4X15-5	ARANDELA 32X4X15-5
10	F01420060	ROS.M10 10,5X 30X2,5 U6593 ZN	WASHER 10,5X30	RONDELLE 10,5X30	SCHEIBE 10,5X30	ARANDELA 10,5X30
11	G15274520	PIASTRA D'APPOGGIO MTE300				
12	F20120346	PUNTALE Q 35 ALETT.POLIT.NERO				
13	G18904050	MOLLA GUIDA 2 TUBI DEPRESS.	TUBE GUIDE SPRING	RESSORT GUIDE-TUBES	EDER ROHRF_HRUNG	MUELLE GUA TUBOS
14	F20110706	CAV.Q.M10X 1,5X 30 47X 60 ZN	DISK SUPPORT.ELEMENT U BOLT SV	CAVALIER SUPPORT DISQUE SV	VERBINDUNG SCHEIBENHALTERUNG S	PERNO EN U SOP. DISCO SV
15	F20110770	CAV.Q.M14X 2X 50 96X119 ZN	U-BOLT M14X96 - 119 ZN	CAVALIER M14X96 - 119 ZN	VERBINDUNG M14X96 - 119 ZN	PERNO EN U M14X96 - 119 ZN
16	F01220048	DADO M12X1,75 D980 8 ZN	SELF LOCKING NUT M12X1,75 980V	ECROU AUTOBL. M12X1,75 980-V	SIEHE 00553312	DADO AUTOBL. M12X1,75 980-V
17	F01020143	VITE M10X 1,5X65 U5737 A2 IX	BOLT M10X 1,5X 65 U5737 8.8 IX	VIS M10X 1,5X 65 U5737 8.8 IX	SCHRAUBE M10X 1,5X 65 U5737 8.	TORNIL. M10X 1,5X 65 U5737 8.8
18	F01020462	VITE M10X1,5 X20 U5739 A2 IX	BOLT M10X1,5 X 20 U5739 8.8 IX	VIS M10X1,5 X 20 U5739 8.8 IX	SCHRAUBE M10X1,5 X 20 U5739 8.	TORNIL. M10X1,5 X 20 U5739 8.8
19	F01200271	DADO M10X 1,5 U5588 A2 IX	NUT 10 5588 6.8 INOX	ECROU 10 5588 6.8 INOX	MUTTER 10 5588 6.8 INOX	TUERCA 10 5588 6.8 INOX
20	G15275360	TUBO Q. 35X 4X5200				
21	G16011830	TUBO Q. 35X 4X2170				
22	G18903860	MOLLA GUIDA 3 TUBI ZN				

TAV. 72

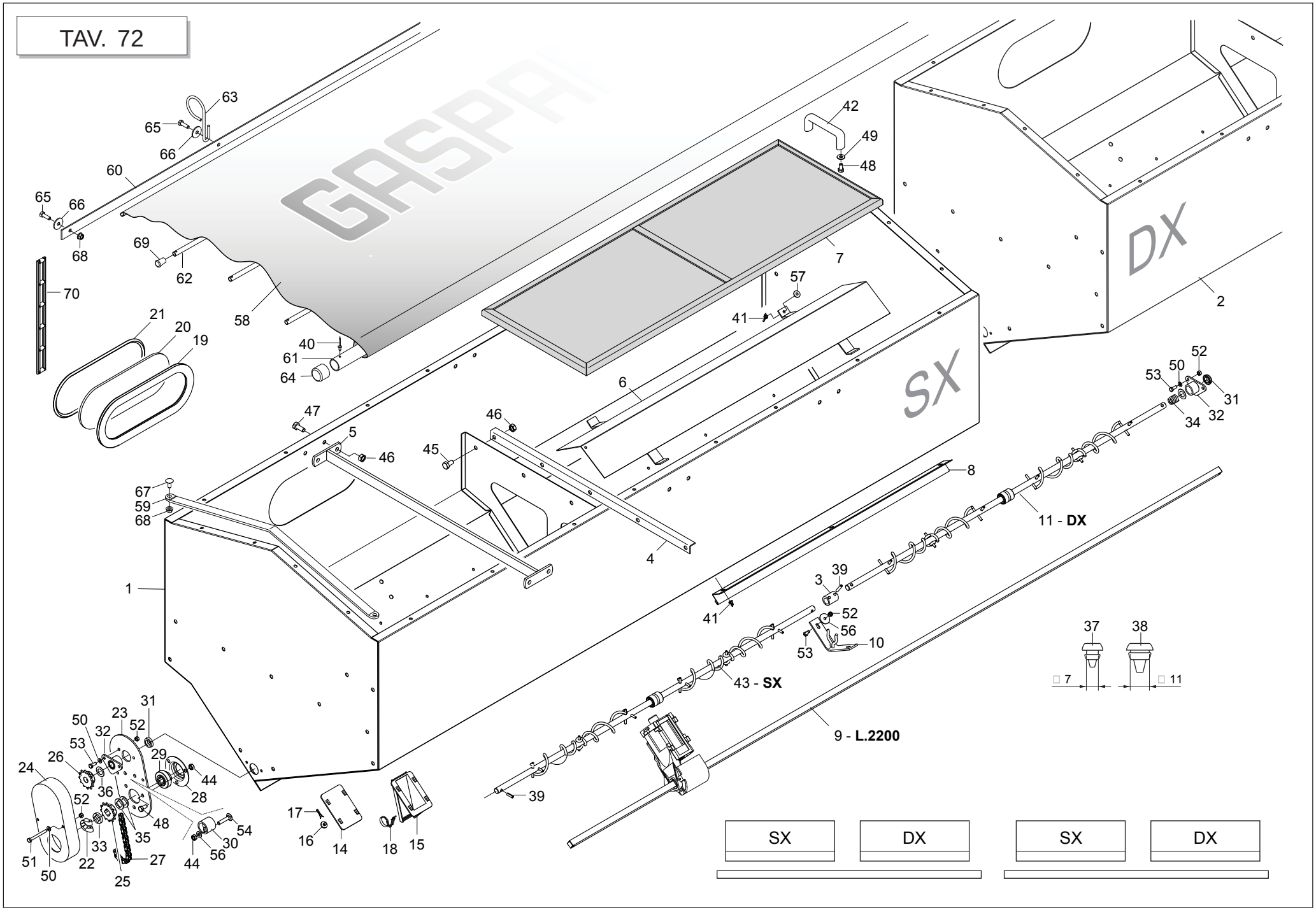

GASPARDO

cod. G19530911

SERBATOI SPANDICONCIME

TAV. 72

Pos.	Cod.	Descrizione	Description	Description	Benennung	Descripcion
1	G15275930	SPANDI SX METRO 09				
2	G15276020	SPANDI DX METRO 09				
3	G15275440	BOCCOLA DI COLLEGAMENTO				
4	G15273540	LAMIERA APPOGGIO GRIGLIA	GRID SUPPORT BRACKET	+TRIER SUPPORT GRILLE	GITTERHALTB_GEL	ESTRIBO SOPORTE REJILLA
5	G15273560	TIRANTE INTERNO	INT. TIE ROD	TRINGLE INT.	INNERE SPANNSTANGE	TIRANTE INTERIOR
6	G15273581	TEGOLO MTE300				
7	G15273840	GRIGLIA SERBATOIO MTE300	TANK GRID. MTE300	GRILLE RESERVOIR MTE300	BEHZLTERGITTER MTE300	REJILLA DEPS. MTE300
8	G15273621	PORTA PULIZIA	CLEANING DOOR	PORTE DE NETTOYAGE	REINIGUNGST_R	PUERTA LIMPIEZA
9	G22250276	ASSE TRASM.SEMINAT.L.2200 SV	AXLE- SEEDING MACH. GEARBOX L.	AXE ENTRAINEMENT SEMEUR L. 220	ACHSE SZELEMENT-ANTRIEB.L.2200	EJE TRANS.SEMBR. L.2200 SV
10	G15273700	SUPPORTO COCLEA	SCREW SUPPORT	SUPPORT VIS ALIMENTATION	HALTERUNG SCHNECKE	SOPORTE CËCLEA
11	G15275460	MONT.ASSE AGITAT.BBP METRO				
12	G19003660	SUPPORTO	SUPPORT	SUPPORT	HALTERUNG	SOPORTE
13	G16670180	INGRANAGGIO Z.15-DISTANZ.COMPL	COMPLETE GEAR Z.15-SPACER	ENGRENAGE Z.15 ENTRET. COMPL.	ZAHNRAD Z.15-KOMPL. DISTANZST	ENGRANAJE Z.15-DISTANC.COMPL
14	G66248184	CHIUSURA USCITA SERB.SPAND.SP	OUTLET CLOSURE- MAN.SPREAD. TA	FERMETURE SORTIE RESERVOIR FER	VERSCHLUSS AUSTRITT DsNGERSTR.	CIERRE SALIDA DEPS. ABON. SP I
15	G66248187	SCARICO SERB.SPAND.TIPO MICRO	MICRO TYPE MAN.SPR.TANK DISCH.	TRAPPE DE VIDANGE TYPE MICRO	BEHZLTERENTLADUNG STREUER TYP	DESCARGA DEPS. ABON.TIPO MICRD
16	G66248224	FERMO DISTRIBUTORE SPAND.	FERT. SPR. DISTRIB. STOP	ARRET DISTRIBUTEUR EP. ENGRAIS	FESTSTELLVORRICHTUNG SZAPP. ST	BLOQUEO DISTRIBUIDOR ABON.
17	G65336089	MOLLA SPEC.TENUTA FERMO SPAND.	SPEC.SPRING- BLOCK. MAN. SPR.	RESSORT SPEC. D'ETANCHEITE ARR	SPEZIALFEDER DICHTUNG STREUER	MUELLE ESPEC. RETENC. BLOQ
18	G65336080	MOLLA SPEC.SCARICO SPAND.T.M.	SPEC.SPRING- MAN. SPR. DISCHAR	RESSORT SPEC. DECHARGEMENT FER	SPEZIALFEDER STREUERENTLADUNG	MUELLE ESPEC. DESCARGA ABONAD.
19	F03011155	GUARNIZIONE VETRO TRAMOGGIA	GLASS SEAL	GARNITURE VERRE	GLASDICHTUNG	JUNTA VIDRIO
20	G16021080	VETRO CONTROLLO LIVELLO SEMI	SEED LEVEL CHECKING GLASS	VITRE CONTROLE NIV. GRAINES	KONTROLLFENSTER SAMENSTAND	VIDRIO CONTROL NIVEL SEMILLAS
21	G68005092	TENDITORE GUARNIZIONE	TURNBUCKLE GASKET	TENDEUR GARNITURE	DICHTUNGSSPANNER	TENSOR JUNTA
22	G14830360	MONT.FERMO DI LAMIERA				
23	G15471930	PROTEZIONE	GUARD	PROTECTION	SCHUTZ	PROTECCIN P
24	G17170270	PROTEZIONE RINVIO SERBATOIO	INTERNAL TRANSMISS. TANK PROTE	PROTECTION RENVOI TREMIE	VORGELEGESCHUTZ BEH-LTER	PROTECCION ENVIO DEPOSITO
25	G20860086	INGRANAGGIO 1/2 Z-12 F.Q.	GEAR 1/2 Z-12 F.Q.	ENGRENAGE 1/2 Z-12 TROUS CARRE	ZAHNRAD 1/2 Z-12 F.Q.	ENGRANAJE 1/2 Z-12 F.Q.
26	G20860088	INGRANAGGIO 1/2 Z-12 F.T.	GEAR 1/2 Z-12 F.T.	ENGRENAGE 1/2 Z-12 TROUS RONDS	ZAHNRAD 1/2 Z-12 F.T.	ENGRANAJE 1/2 Z-12 F.T.
27	F06080196	CATENA 1/2 ISO 083 32 MAGLIE	CUT-DOWN CHAIN .1/2 ISO 083 32	TRONCON CHAINE 1/2 ISO 083 32	KETTENLZNGE 1/2 ISO 083 32 GL	TRECHO CADENA 1/2 ISO 083 32
28	G22230094	SUPPORTO CUSCINETTO	BEARING SUPPORT	SUPPORT PALIER	LAGERBsCHSE	SOPORTE COJINETE
29	G14830390	CUSCINETTO FORO QUADRO	SQUARE-HOLED BEARING	ROULEMENT AL+SAGE CARR+	VIERKANTLAGER	COJINETE ORIFICIO CUADRADO
30	G66248207	TENDICATENA SPAND. SP-520	CHAIN TENSIONER	TENDEUR DE CHAINE EPAND. ENGR.	KETTENSPANNER DsNGERSTR. SP-52	TENSOR DE CADENA ABON. SP-520
31	F03011081	GUARNIZIONI LABBRO DE100				
32	G66248121	BOCCOLA CON FLANGIA M80	BUSHING W/ FLANGE M80	SUPPORT AVEC BRIDE M80	BsCHSE MIT FLANSCH M80	CASQUILLO CON BRIDA M80
33	G66248218	RONDELLA DISTAN.SPAND.	MAN. SPR. SPACER WASHER	RONDELLE ENTRETOISE EP. ENGRAI	ABSTANDSCHEIBE DsNGERSTREUER	ARANDELA DISTAN.ABONAD.
34	G65338043	MOLLA COMP.ZN SERB. M80	ZN TANK COMP.SPRING M80	RESSORT COMPL. ZN RESERVOIR M8	DRUCKFEDER ZN BEHZLTER M80	MUELLE COMP.ZN DEPS. M80 A
35	G18701650	RONDELLA FORO QUADRO ZN	WASHER 16,5X30X2,5 ZN	RONDELLE 16,5X30X2,5 ZN	UNTERLEGSCHEIBE 16,5X30X2,5 ZN	ARANDELA 16,5X30X2,5 ZN
36	G18700220	RONDELLA 16 X28 X0,3 ACC.				
37	G19003160	TAPPO PER FORO D.7	PLUG FOR D.7 HOLE	BOUCHON POUR TROU D.7 P	FROPFEN FsR LOCH D.7 T	APN PARA AGUJERO D.7 DO
38	G66248223	TAPPO SUPP.SPAND.D.11	PLUG MAN. SPR. SUPP. D.11	BOUCHON SUPPORT EP. ENGRAIS D.	HALTERUNGSPFROPFEN DsNGERSTR.	TAPN SOPORTE ABON.D.11 D
39	F02100114	SPINA E.P. 6X 30 U6873 C70 BR	ELASTIC PIN 6X30	GOUJON ELASTIQUE 6X30	SPANNHUELSE 6X30	ESPINA ELASTICA 6X30
40	F02250123	RIVETTO STR. 4,8X 9 U9200A AL	PULL RIVET 4,8X 9 U9200A ALL	RIVET A RUPTURE 4,8X 9 U9200A	REISSNIETE 4,8X 9 U9200A ALL	REMACHE DESGAR. 4,8X 9 U9200A
41	F01240012	DADO M 6X 1 U5448 5.8 ZN	NUT 6 UNI 5448 5.8 ZN	ECROU 6 UNI 5448 5.8 ZN	MUTTER 6 UNI 5448 5.8 ZN	TUERCA 6 UNI 5448 5.8 ZN
42	F05150112	MANIGLIA INTERAS. 117 FORO 8MM	HANDLE	POIGNEE	HANDGRIFF	MANILLA
43	G15273610	ASSE AGITAT.SERBAT.UNICO COMPL	STIRRER SPINDLE BB300 TANK	AXE AGITATEUR RESERVOIR BB300	SAMENMISCHERACHSE BEH. BB300	EJE AGITAD. DEPS. BB300
44	F01200245	DADO M 8X1,25 U5588 A2 IX	NUT M 8X1,25 U5588 6.8 IX	ECROU M 8X1,25 U5588 6.8 I	MUTTER M 8X1,25 U5588 6.8	TUERCA M 8X1,25 U5588 6.8
45	F01020462	VITE M10X1,5 X20 U5739 A2 IX	BOLT M10X1,5 X 20 U5739 8.8 IX	VIS M10X1,5 X 20 U5739 8.8 IX	SCHRAUBE M10X1,5 X 20 U5739 8.	TORNIL. M10X1,5 X 20 U5739 8.8
46	F01200271	DADO M10X 1,5 U5588 A2 IX	NUT 10 5588 6.8 INOX	ECROU 10 5588 6.8 INOX	MUTTER 10 5588 6.8 INOX	TUERCA 10 5588 6.8 INOX
47	F01020463	VITE M10X1,5 X25 U5739 A2 IX	SCREW 10X25 5739 INOX A2	VIS 10X25 5739 INOX A2	SCHRAUBE 10X25 5739 INOX A2	TORNILLO 10X25 5739 INOX A2
48	F01020434	VITE M 8X1,25X16 U5739 A2 IX	BOLT M 8X1,25X 16 U5739 8.8 IX	VIS M 8X1,25X 16 U5739 8.8 IX	SCHRAUBE M 8X1,25X 16 U5739 8.	TORNIL. M 8X1,25X 16 U5739 8.8
49	G20970140	RONDELLA 20X2X8,5	WASHER 20X2X8,5	RONDELLE 20X2X8,5	UNTERLEGSCHEIBE 20X2X8,5	ARANDELA 20X2X8,5
50	F01410034	ROS.M6 6,4X12,5X1,6 U6592 IX	INOX A2 WASHER D6 UNI 6592	RONDELLE D6 UNI 6592 INOX A2	UNTERLEGSCHEIBE D6 UNI 6592 IN	ARANDELA D6 UNI 6592 INOX A2
51	F01020043	VITE M 6X 1X 60 U5737 8.8 ZN	BOLT 6 X60 5737 8.G GALVANIZED	VIS 6 X60 5737 8.G ZN	SCHRAUBE 6 X60 5737 8.G ZN	TORNILLO 6 X60 5737 8.G ZN
52	F01200233	DADO M 6X 1 U5588 A2 IX	NUT M 6X 1 U5588 IX	ECROU M 6X 1 U5588 I	MUTTER M 6X 1 U5588	TUERCA M 6X 1 U5588
53	F01020419	VITE M 6X1 X 16 U5739 A2 IX	BOLT M6 X1 X 16 U5739 8.8 IX	VIS M6 X1 X 16 U5739 8.8 IX	SCHRAUBE M6 X1 X 16 U5739 8.	TORNIL. M6 X1 X 16 U5739 8.8
54	F01020068	VITE M 8X1,25X40 U5737 8.8 ZN	BOLT M8X1,25X40 U5737 8.8 ZB	VIS M 8X1,25X40 U5737 8.8 ZN	SCHRAUBE M8X1,25X40 U5737 8.8	TORNILLO M8X1,25X40 U5737 8.8

TAV. 72

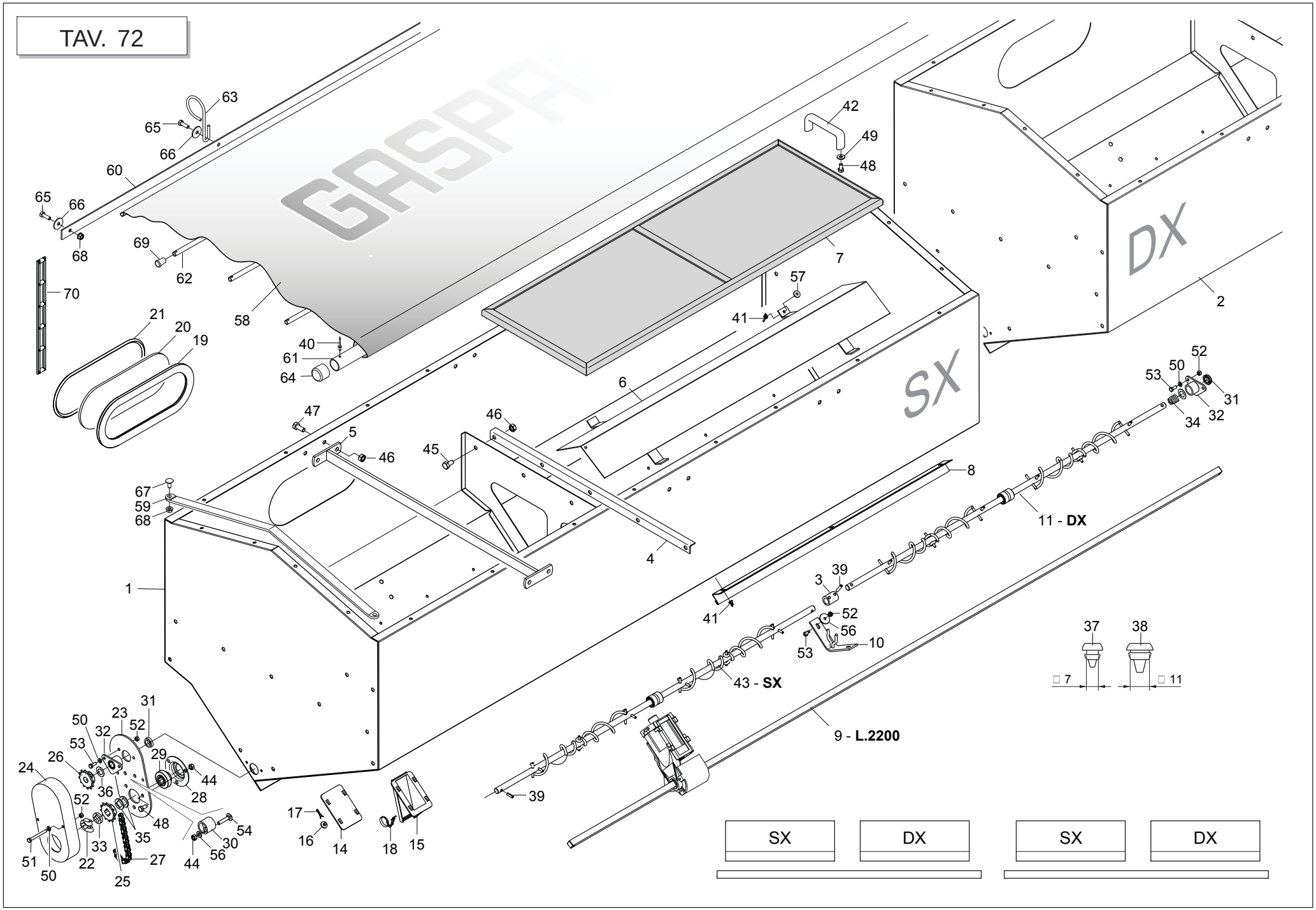

GASPARDO

cod. G19530911

SERBATOI SPANDICONCIME

TAV. 72

Pos.	Cod.	Descrizione	Description	Description	Benennung	Descripcion
55	F01020398	VITE M 6X 1X 12 U5739 8.8 ZN	BOLT M 6X12	VIS M 6X12	SCHRAUBE M 6X12	TORNILLO M 6X12
56	G20970125	RONDELLA 28X2,5X6,5	WASHER 28X2-5X6-5	RONDELLE 28X2-5X6-5	UNTERLEGSCHEIBE 28X2-5X6-5	ARANDELA 28X2-5X6-5
57	F01420039	ROS.M6 6,4X 24X 2 U6593 IX	WASHER M6 6,4X24X2 U6593 IX	RONDELLE M6 6,4X24X2 U6593 IX	SCHEIBE M6 6,4X24X2 U6593 IX	ARANDELA M6 6,4X24X2 U6593 IX
58	G15275300	TELO COPRISERBATOIO BBP METRO				
59	G15273632	SUPPORTO TELO COPRISERBATOIO				
60	G15275310	ASTA FISSAGGIO TELO BBP				
61	G15275330	TUBO TELO COPRISERBATOIO				
62	G15275320	TUBO RINFORZO TELO BBP				
63	G18902270	GUIDATUBO ZN TEL				
64	G66248098	TAPPO CONVOGLIATORE DEPR. SP	AIR PUMP CONVEYOR PLUG SP	BOUCHON CONVOYEUR TURBINE SP	VAKUUM FTRDERPFROPFEN SP	TAPN CONDUCTOR DEPR. SP D
65	F01020457	VITE M8 X1,25X20 U5739 A2 IX	BOLT M8 X1,25X 20 U5739 8.8 IX	VIS M8 X1,25X 20 U5739 8.8 IX	SCHRAUBE M8 X1,25X 20 U5739 8.	TORNIL. M8 X1,25X 20 U5739 8.8
66	F01420049	ROS.M8 8,4X 32X 2 U6593 ZN	WASHER M8 8,4X32X2 U6593 ZG	RONDELLE M8 8,4X32X2 U6593 ZG	SCHEIBE M8 8,4X32X2 U6593 ZG	ARANDELA M8 8,4X32X2 U6593 ZG
67	F01060040	BUL.M 8X1,25X 20 U5732 4.6 ZG	BOLT 8 X20 5732 4.6 GALVANIZED	VIS 8 X20 5732 4.6 ZN	SCHRAUBE 8 X20 5732 4.6 ZN	TORNILLO 8 X20 5732 4.6 ZN
68	F01260043	DADO FLANG.M8 D6923 8.8 ZN	FLANGE NUT M8 DIN 6923 8.8 GAL	ECROU BRIDE .M8 DIN 6923 8.8 Z	GEFLANSCHTE MUTTER M8 DIN6923	TUERCA BRIDA M8 DIN 6923 8.8 Z
69	F05150472	PUNTALE A CAMPANA PVC NERO D10	PVC TIP D.10	EMBOUT PVC D. 10	STTSSELSCHAFT PVC D.10	PUNTAL PVC D.10
70	F06080487	CATENA AGGANCIO TELO IN GOMMA	RUBBER FRAME CONNECTION CHAIN	CHA+NE ACCROCHAGE TOILE EN CAO	KETTE BEFESTIGUNG GUMMITUCH	CADENA ENGANCHE LONA DE CAUCHO

TAV. 82

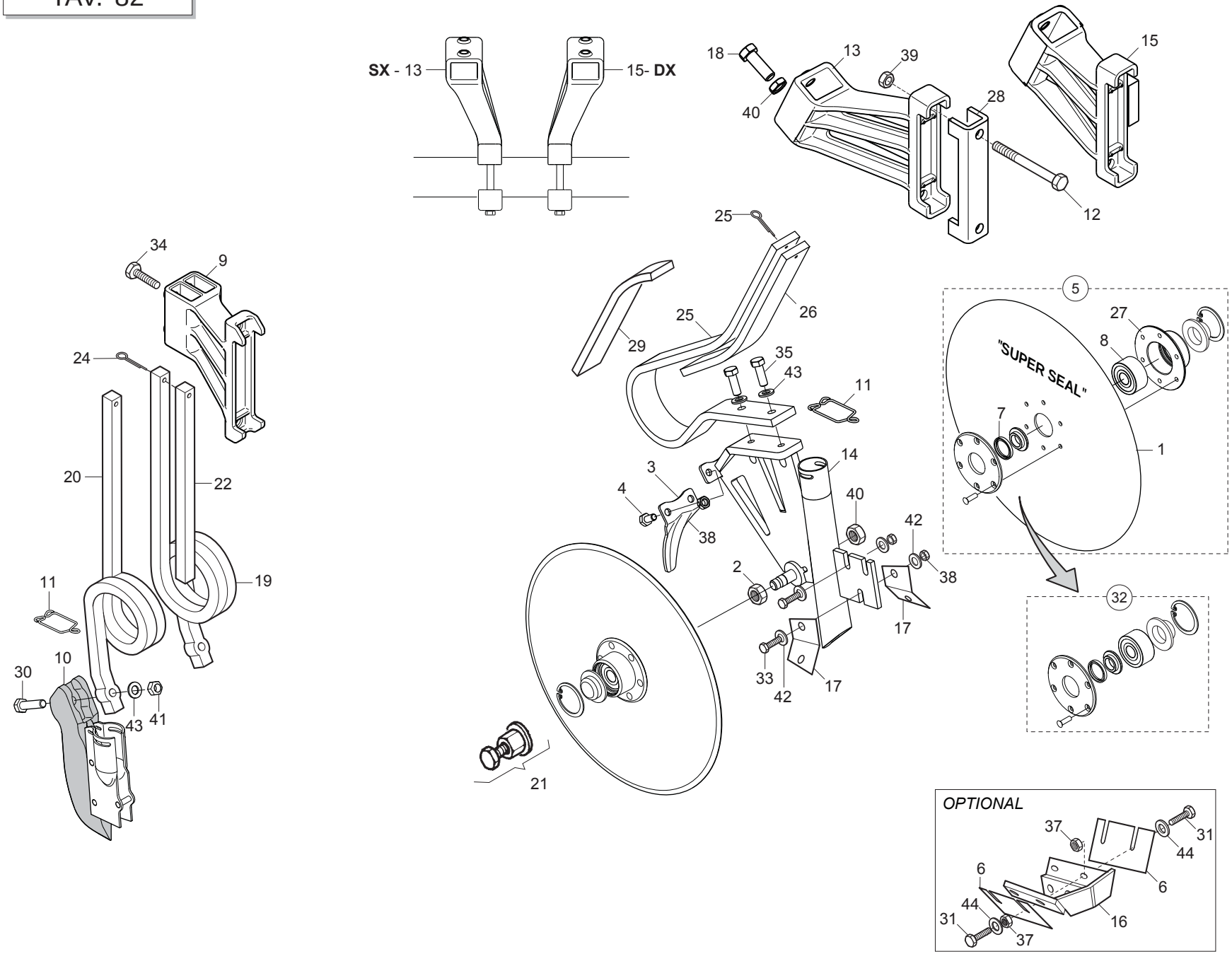

GASPARDO

ELEMENTI DI CONCIMAZIONE

TAV. 82

Pos.	Cod.	Descrizione	Description	Description	Benennung	Descripcion
1	G13825091	DISCO ASSOLCATORE D.373	FURROW OPENER DISK D.373	DISQUE D. 373 6 T.D.6	SCHEIBE SZSCHARENREISSER D.373	DISCO SURCADOR D.373
2	G15220540	DADO M16X1,5 SX	NUT M16X1-5 LEFT	ECROU M16X1-5 GCH	MUTTER M16X1-5 LI	TUERCA M16X1-5 IZQ
3	G15225860	PROTEZIONE DISCHI	DISC PROTECTION	PROTECTION DISQUE	DISCSCHUTZ	PROTECCIN DISCO
4	F01020470	VITE M10X 1,5X20 U5739 8.8 ZN	BOLT M 10X20	VIS M 10X20	SCHRAUBE M 10X20	TORNILLO M 10X20
5	G15225500	DISCO ASSOLC.PROTETTO COMPL.	COMPL. PROTECTED DISC COULTER	DISQUE DU SOC PROT+G+ COMPLET	GESCH_TZTE FURCHENFORMSCHEIBE	DISCO SURC.PROTEGIDO COMPL.
6	G15422231	RASCHIATERRA DISCO				
7	F03011075	AN. TENUTA B1OF 24X32X4	SEALING RING G24X32X4	BAGUE D'ETANCHEITE G24X32X4	DICHTRING G24X32X4	ANILLO AISLADOR G24X32X4
8	F04010084	CUSC.D17D47 B22,2 3303 LLU/DDU	BEARING 3303 2RS	PALIER 3303 2RS	LAGER 3303 2RS	COJINETE 3303 2RS
9	G19203920	SUPP.MOLLA QUADRA DOPPIA POS.				
10	G16670600	FALCIONE ELEM.CONCIMAZ.QUADRA	BASIC SQUARE FERTILIZATION COU	SOC +LEM. FERTILIS. RESSORT CA	S-SCHAR ELEM.D_NGUNG QUADR.FED	BOTA ELEM.ABONAD.MUELLE CUADRA
11	G18903911	MOLLA FERMO TUBO D.35	PIPE LOCK SPRING D.35	RESSORT ARR-T TUBE D.35	ROHRSPERRFEDER D.35	MUELLE TOPE TUBO D. 35
12	F01020236	VITE M14X 2X220 U5737 8.8 BR	SCREW M14X2X220 U5737 8.8 BR	VIS M14X2X220 U5737 8.8 BR	SCHRAUBE M14X2X220 U5737 8.8	TORNILLO M14X2X220 U5737 8.8
13	G19204110	SUPP.SX MOLLA DISCHI				
14	G16670271	SUPPORTO DISCHI CONCIMAZ.				
15	G19204100	SUPP.DX MOLLA DISCHI				
16	G15472290	SUPPORTO RASCHIAT.DISCHI CONC.	FERTIL DISKS SOIL SCRAPER SUPP	SUPP. RACLEUR DISQUES FUMAGE	HALTER. ERDSCHABER DsNGUNGSSCH	SOPORTE RASCADOR DISCOS ABONO
17	G15472301	RASCHIATERRA INTERNO				
18	F01020568	VITE M16X 2X45 U5739 8.8 ZN	BOLT M 16X 2X45 U5739 8.8 ZG	VIS M 16X 2X45 U5739 8.8 ZG	SCHRAUBE M 16X 2X45 U5739 8.8	TORNILLO M16X 2X45 U5739 8.8
19	G18902770	MOLLA CONCIMAZIONE 20X20 DX	RIGHT MANURING SPRING 20X20	RESSORT FUMAGE 20X20 DRT	FEDER DsNGUNG 20X20 RE	MUELLE ABONO 20X20 DER
20	G18902780	MOLLA CONCIMAZIONE 20X20 SX	LEFT MANURING SPRING 20X20	RESSORT FUMAGE 20X20 GCH	FEDER DsNGUNG 20X20 LI	MUELLE ABONO 20X20 IZQ
21	G15225240	ESTRATTORE DISCHI ELEMENTO MT	SEED PLATE EXTRACTOR ELEM. MT	EXTRACTEUR DISQUE ELEMENT MT	SCHEIBENAUSZIEHER ELEMENT MT	EXTRACTOR DISCOS ELEMENTO MT
22	G18903200	FERMO SPIRALE	SPIRAL STOP	ARRET SPIRALE	FESTSTELLVORRICHTUNG SPIRALE	BLOQUEO ESPIRAL
23	G18903210	MOLLA CONCIM.FILE DISPARI	ODD NUMBER ROW MANUR.SPRING	RESS. FUMAGE RANGEES IMPAIRES	FEDER DsNGUNG UNGERADE REIHEN	MUELLE ABONO FILAS IMPARES
24	F02200229	COPIGLIA 5X 45 U1336 ZN	SPLIT PIN 5 X45 1336 GALVAN.	GOUPILLE 5 X45 1336 ZN	SPLINT 5 X45 1336 ZN	PASADOR 5 X45 1336 ZN
25	F02200228	COPIGLIA 5X 35 U1336 ZN	SPLIT PIN 5 X35 1336 GALVAN.	GOUPILLE 5 X35 1336 ZN	SPLINT 5 X35 1336 ZN	PASADOR 5 X35 1336 ZN
26	G18903901	RINFORZO MOLLA CONCIMAZIONE				
27	G15223651	SUPPORTO CUSCINETTO DISCO	DISK BEARING SUPPORT	SUPPORT PALIER DISQUE	SCHEIBENLAGERBsCHSE	SOPORTE COJINETE DISCO
28	G15110091	SCONTRO A U	STRIKER	BRIDE 150 MM	ANSCHLAG	ELEMENTO DE EMPALME
29	G16670630	SPESSORE MOLLA DISCHI CONCIM.	SHIMS	CALE	ZWISCHENLEGSCHEIBE	ESPACIADOR
30	F01020156	VITE M12X1,75X50 U5737 8.8 ZN	BOLT12X50 5737 8.G GALVANIZED	VIS 12X50 5737 8.G ZN	SCHRAUBE 12X50 5737 8.G ZN	TORNILLO 12X50 5737 8.G ZN
31	F01020403	VITE M 6X 1X 16 U5739 8.8 ZN	BOLT M 6X16	VIS M 6X16	SCHRAUBE M 6X16	TORNILLO M 6X16
32	G15226600	KIT X DISCO SUPER SEAL				
33	F01020476	VITE M10X 1,5X30 U5739 8.8 ZN	BOLT M 10X30	VIS M 10X30	SCHRAUBE M 10X30	TORNILLO M 10X30
34	F01020508	VITE M12X1,75X25 U5739 8.8 ZN	BOLT M 12X25	VIS M 12 X 25	SCHRAUBE M 12 X 25	TORNILLO M 12 X 25
35	F01020512	VITE M12X1,75X35 U5739 8.8 ZN	SCREW M 12X35	VIS M 12X35	SCHRAUBE M 12X35	TORNILLO M 12X35
36	F01020528	VITE M12X1,75X40 U5739 10.9 ZD	SCREW 12X40 5739 10.9 ZN	VIS 12X40 5739 10.9 ZN	SCHRAUBE 12X40 5739 10.9 ZN	TORNILLO 12X40 5739 10.9 ZN
37	F01200232	DADO M 6X 1 U5588 6.8 ZN				
38	F01200270	DADO M10X 1,5 U5588 6.8 ZN	NUT M10	ECROU M10	MUTTER M10	DADO M10
39	F01200306	DADO M14X 2 U5588 6.8 ZN	NUT M14X2	ECROU M14X2	MUTTER M14X2	DADO M14X2
40	F01200442	DADO M16X 1,5 U5589 6.8 ZN	NUT 16X1-5 UNI 5589 6.8 GALVAN	ECROU 16X1-5 UNI 5589 6.8 ZN	MUTTER 16X1-5 UNI 5589 6.8 ZN	TUERCA 16X1-5 UNI 5589 6.8 ZN
41	F01220048	DADO M12X1,75 D980 8 ZN	SELF LOCKING NUT M12X1,75 980V	ECROU AUTOBL. M12X1,75 980-V	SIEHE 00553312	DADO AUTOBL. M12X1,75 980-V
42	F01410064	ROS.M10 10,5X 20X 2 U6592 ZN	WASHER 10,5X21	RONDELLE 10,5X21	SCHEIBE 10,5X21	ARANDELA 10,5X21
43	F01410076	ROS.M12 13X 24X2,5 U6592 ZN	PLANE WASHER D12 UNI 6592 ZN	RONDELLE D12 UNI 6592 ZN	SCHEIBE D12 UNI 6592 ZN	ARANDELA D12 UNI 6592 ZN
44	F01420036	ROS.M6 6,4X 18X 2 U6593 ZN	FLAT WASHER 6-6X 18X2 6593 ZN	ROND. PLATE 6-6X 18X2 6593 ZN	SCHEIBE 6-6X 18X2 6593 ZN	ARAND. PLANA 6-6X 18X2 6593 ZN

TAV. 90

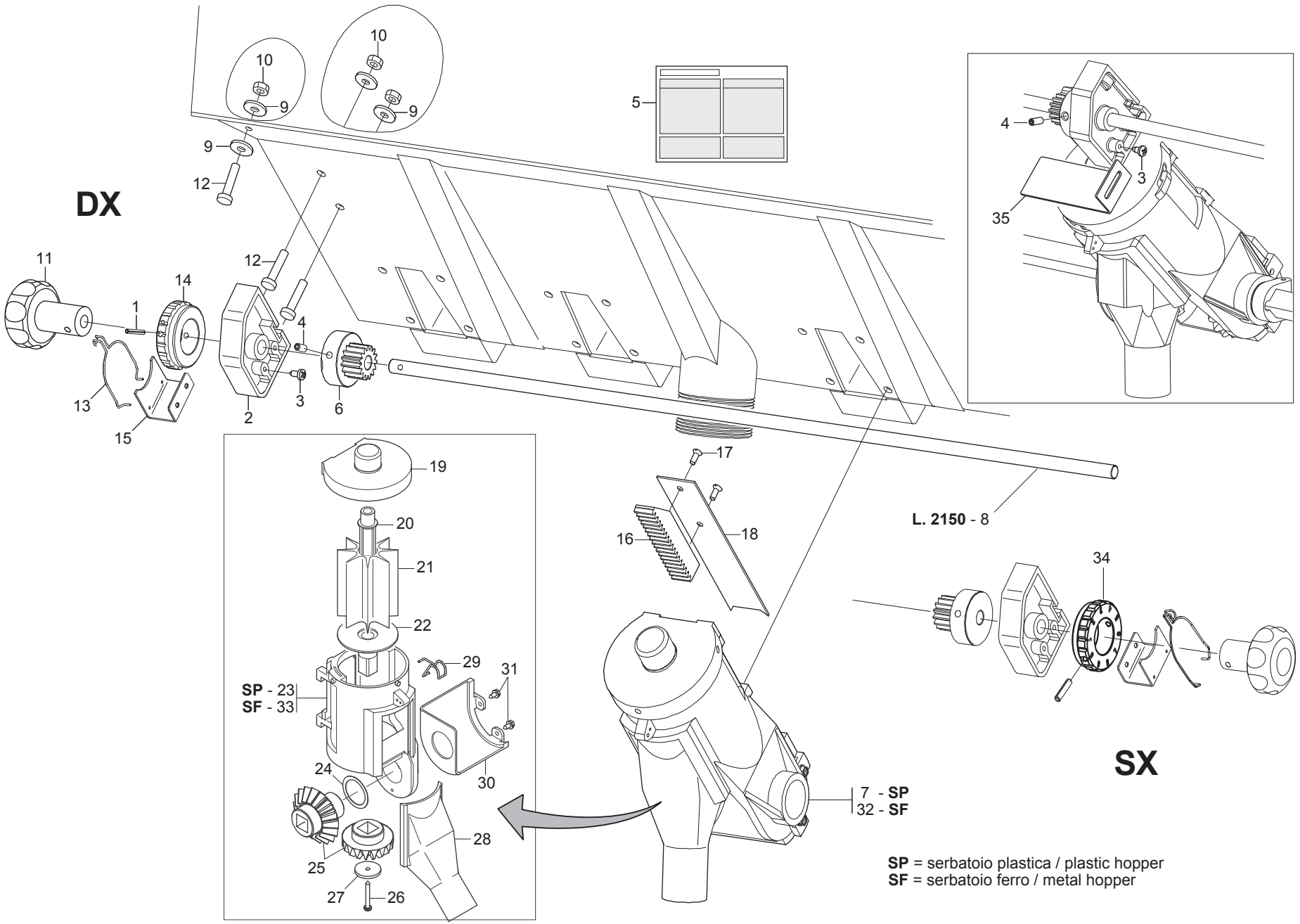

GASPARDO

REGOLAZIONE CENTRALIZZATA "SPEEDY SET"

TAV. 90

Pos.	Cod.	Descrizione	Description	Description	Benennung	Descripcion
1	F02100066	SPINA E.P. 4X 36 U6873 C70 BR				
2	G19003660	SUPPORTO	SUPPORT	SUPPORT	HALTERUNG	SOPORTE
3	F01070061	VIT.A.3,9X1,34X 9,5 6954 4.8NI				
4	F01050083	VIT.M 5X 0,8X 12 U5927 A2 IX				
5	G19702952	DECAL.TAB.DISTRIB.SPEEDY-SET	SPEEDY-SET DISTRIB. CHART STI	DECALC.TABLEAU DISTRIB. SPE.-S	ABZIEHB. TAB.APPARAT SPEEDY-SE	CAL.TABLA DISTRIB. SPEEDY-SET
6	G19003680	INGRANAGGIO Z.15	GEAR Z 15	ENGRENAGE Z 15	ZAHNRAD Z 15	ENGRANAJE Z 15
7	G16670040	DISTR.COMPL.8PALE SPEEDY SET P	COMPL.PLA.SPEEDY SET DISTR.8R	MINIMAX COMPL 8C PLA SPEEDYSET	KOMPL.DOSIER.SPEEDY SET PLA.8S	DISTR.COMP.SPEEDY SET PLA.8AL.
8	G15275350	ASSE D.10X 2150				
9	F01420038	ROS.M6 6,4X 18X 2 U6593 IX	WASHER M6 6,4X18X2 U6593 IX	RONDELLE M6 6,4X18X2 U6593 IX	SCHEIBE M6 6,4X18X2 U6593 IX	ARANDELA M6 6,4X18X2 U6593 IX
10	F01200233	DADO M 6X 1 U5588 A2 IX	NUT M 6X 1 U5588 IX	ECROU M 6X 1 U5588 I	MUTTER M 6X 1 U5588	TUERCA M 6X 1 U5588
11	G19003670	MANOPOLA SPEEDY SET	SPEEDY HANDLE SET	POIGN+E SPEEDY SET	GRIFF SPEEDY SET	EMPUĐADURA SPEEDY SET
12	F01020419	VITE M 6X1 X 16 U5739 A2 IX	BOLT M6 X1 X 16 U5739 8.8 IX	VIS M6 X1 X 16 U5739 8.8 IX	SCHRAUBE M6 X1 X 16 U5739 8.	TORNIL. M6 X1 X 16 U5739 8.8
13	G65336055	MOLLA SPEC.REGOL.SPAND. SP	SPEC SPRING MAN. SPR. ADJUSTM.	RESSORT SPEC. REGL. EP. ENTRAI	SPEZIALFEDER STREUEREINSTELLUN	MUELLE ESPEC. REGUL. ABONADORA
14	G19003720	GHIERA REGOLAZIONE SX	LEFT ADJUSTMENT KNURLED NUT	MANCHON DE REGLAGE GCH	EINSTELLMUTTER LINKS	ROSCA REGULACION IZQUIERDA
15	G16670140	SUPPORTO MOLLA REGOLATORE	REGULATOR SPRING SUPPORT	SUPPORT RESSORT R+GULATEUR	HALTERUNG EINSTELLFEDER	SOPORTE MUELLE REGULADOR
16	G19003690	CREMAGLIERA	RACK	CR+MAILL+RE	ZAHNSTANGE	CREMALLERA
17	F01080032	VITE M 4X 0,7X10 U7688 A2 IX	SCREW M4X 0,7X10 U7688 A2 IX	VIS M4X 0,7X10 U7688 A2 IX	SCHRAUBE M4X 0,7X10 7688 A2 IX	TORNILLO M4X0.7X10 U7688 A2 IX
18	G16670100	REGOLATORE APERTURA	OPENING REGULATOR	REGULATEUR OUVERTURE	TFFNUNGSEINSTELLER	REGULADOR ABERTURA
19	G19003700	COPERCHIO SPEEDY SET	COVER SPEEDY SET	COUVERCLE SPEEDY SET	DECKEL SPEEDY SET	TAPA SPEEDY SET
20	G66248173	ASSE DISTR.SPAND. SP	MANURE SPREADER DISTR. SPINDLE	AXE DISTRIBUTEUR EP.ENGRAIS SP	ACHSE SZAPPARAT STREUER SP	EJE DISTR. ABON. SP
21	G66248172	DOSATORE DISTR.SPAND. SP	MAN.SPR. SEED METERING DEVICE	DOSEUR DISTRIBUTEUR EP. ENGRAI	DOSIERER DsNGERSTREUER. SP	DOSIFICADOR DISTR.ABON. SP
22	G66248211	PERNO RONDELLA FUSA SPAND. SP	MAN. SPR. CAST WASHER PIN. SP	PIVOT RONDELLE MOULEE EP. ENGR	ZAPFEN LOSE UNTERLEGSCHEIBE ST	PERNO ARANDELA FUNDIDA ABONAD
23	G19002920	CORPO DISTRIBUTORE SPANDI PLA.	PLA. F.SPREADER DISTRIB.CASING	CORPS DISTRIBUTEUR EPAND.	VERTEILUNGSKTRPER STREUER PLA.	CUERPO DIST. ABONADORA PLæS.
24	G18701500	RONDELLA 29,5 X38 X0,3	WASHER 29,5 X 38 X 0,3	RONDELLE 29,5 X38 X0,3	UNTERLEGSCHEIBE 29,5X38X0,3	ARANDELA 29,5 X38 X0,3
25	G20860126	KIT INGR DISTR CONCIME (2+2)	KIT- MAN. DISTR. GEARS	COUPLE CON DISTR ENGRAIS (2+2)	KIT ZAHNRZDER DsNGERSTREUER	SET ENGRANAJES DISTRIB. ABONO
26	F01070075	VIT.A.4,2X1,41X 38 6954 4.8NI	BOLT 4-2X38 DIN 7981	VIS 4-2X38 DIN 7981	SCHRAUBE 4-2X38 DIN 7981	TORNILLO 4-2X38 DIN 7981
27	G20970097	RONDELLA 32X3X4,5	WASHER 32X3X4-5	RONDELLE 32X3X4-5	UNTERLEGSCHEIBE 32X3X4-5	ARANDELA 32X3X4-5
28	G66248178	SCIVOLO DISTR.SPAND. SP	CHUTE- MANURE-SPREADER DISTRIB	LANCOIR DISTRIBUTION EP. ENGR.	DsNGERSTREUER RUTSCHE SP	PLANO INCLINADO DISTR. ABON. S
29	G65336062	MOLLA SPEC.SCIV.DISTR.SPAND.SP	SPEC SPRING - MAN. SPR. DISTR.	RESS. SPEC. LANCOIR DISTR. EP.	SPEZ.FEDER RUTSCHE SZAPP. STRE	MUELLE ESPEC.PLANO INCL.DISTR.
30	G19002850	PROTEZIONE PIGNONE	PINION GUARD	PROTECTION PIGNON	RITZELSCHUTZ	PROTECCIN PI¾N PR
31	F01070011	VIT.A.4,2X1,41X 9,5 6950 4.8NI	BOLT- SELF-TAPPING 4-2X9-5T.E.	VIS AUTOTAR. 4-2X9-5 T. E. COU	SELBSTSCHNEID. SCHRAUBE 4-2X9-	TORNILLO AUTORROSC. 4-2X9-5
32	G13722330	DISTR.COMPL.8PALE SPEEDY SET F	COMPL.SPEEDY 8-BLADE DISTR. SE	DISTR.COMPL.8PALETTES SPEEDY S	SAATGUTAUS.8SCH.KOMPL.SPEEDY S	DISTR.COMPL.8PALETAS SPEEDY SE
33	G66248176	CORPO DISTR.SPAND. SP	MANURE SPREADER DISTR. CASING	CORPS DISTRIB. EP. ENGRAIS SP	VERTEILUNGSKTRPER STREUER SP	CUERPO DISTR. ABON. SP
34	G19003710	GHIERA REGOLAZIONE DX	RIGHT ADJUSTMENT KNURLED	BAGUE REGLAGE DROITE	EINSTELLMUTTER RE	CONTRATUERCA REGULACIN DER.
35	G17120340	LAMA BLOCCO CREMAGL.MINIMAX				

TAV. 100

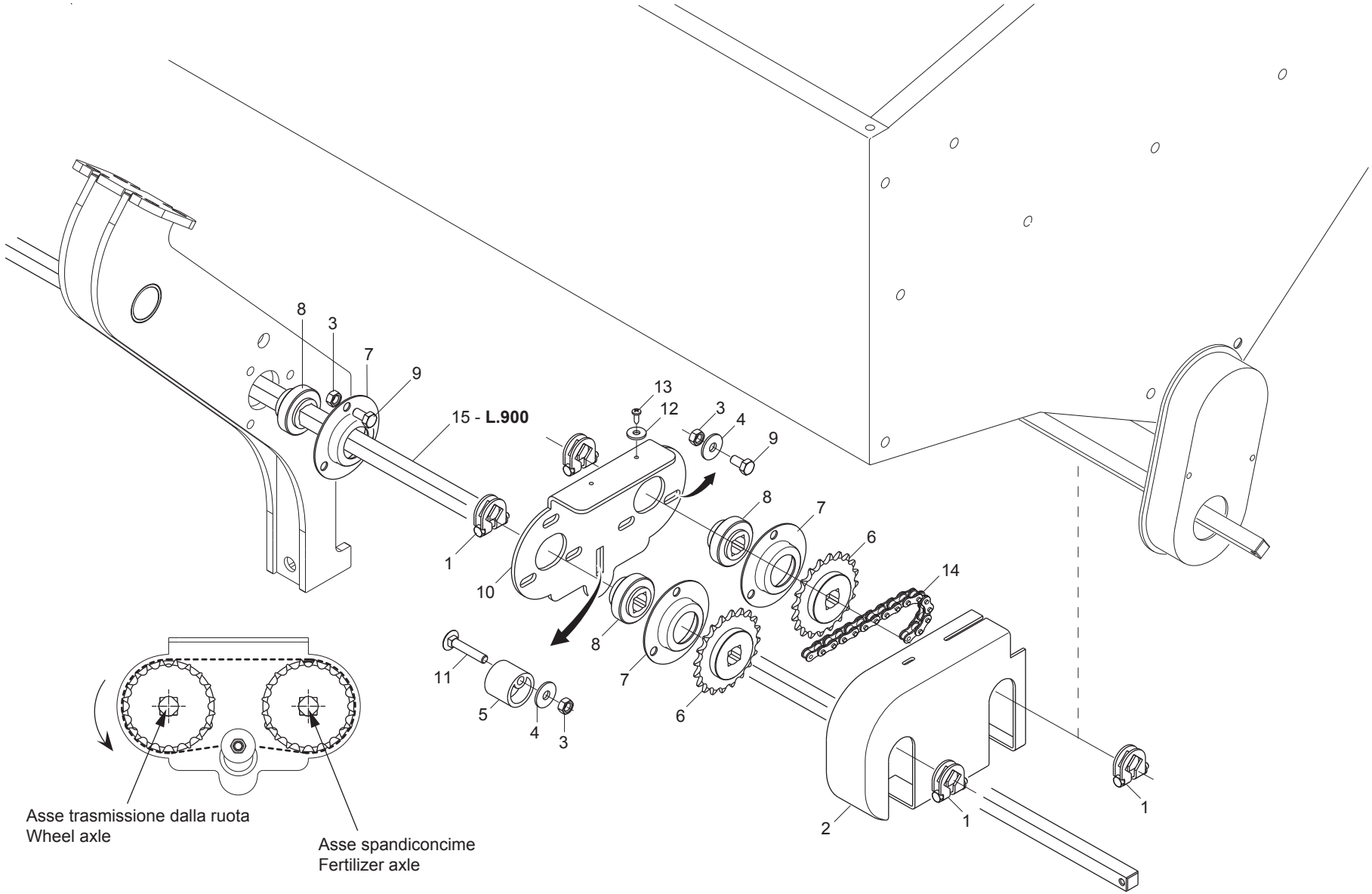

GASPARDO

TRASMISSIONE SPANDICONCIME

TAV. 100

Pos.	Cod.	Descrizione	Description	Description	Benennung	Descripcion
1	G14830360	MONT.FERMO DI LAMIERA				
2	G15275710	CARTER				
3	F01200244	DADO M 8X1,25 U5588 6.8 ZN	NUT M8	ECROU M8	MUTTER M8	DADO M8
4	F01420048	ROS.M8 8,4X 24X 2 U6593 ZN	PLANE WASHER D.8	RONDELLE D.8	SCHEIBE D.8	ARANDELA D.8
5	G66248207	TENDICATENA SPAND. SP-520	CHAIN TENSIONER	TENDEUR DE CHAINE EPAND. ENGR.	KETTENSPANNER DsNGERSTR. SP-52	TENSOR DE CADENA ABON. SP-520
6	G20910039	INGRANAGGIO SUP.Z-20 FERRO *				
7	G22230094	SUPPORTO CUSCINETTO	BEARING SUPPORT	SUPPORT PALIER	LAGERBsCHSE	SOPORTE COJINETE
8	G14830390	CUSCINETTO FORO QUADRO	SQUARE-HOLED BEARING	ROULEMENT AL+SAGE CARR+	VIERKANTLAGER	COJINETE ORIFICIO CUADRADO
9	F01020432	VITE M 8X1,25X16 U5739 8.8 ZN	BOLT M 8X16	VIS M 8X16	SCHRAUBE M 8X16	TORNILLO M 8X16
10	G15275340	SUPPORTO TRASMISSIONE SPANDI				
11	F01060047	BUL.M 8X1,25X 45 U5732 4.6 ZN	BOLT 8X45 5732 4.6 GALVANIZED	VIS 8X45 5732 4.6 ZN	SCHRAUBE 8X45 5732 4.6 ZN	TORNILLO 8X45 5732 4.6 ZN
12	F01420011	ROS.M4 4,3X 16X 1 U6593 ZN	FLAT WASHER 4-3X 16X1-5 6593 G	ROND.PLATE 4-3X 16X1-5 6593 ZN	SCHEIBE 4-3X 16X1-5 6593 ZN	ARAND. PLANA 4-3X 16X1-5 6593
13	F01070078	VIT.A.4,2X1,41X 13 6950 4.8ZN	SELFTHREADING BOLT 4,2X13 TE	VIS AUTOTARADEUSE.4-2X13 TE	SELBSTSCHNEID. SCHRAUBE 4-2X13	TORNILLO AUTOR.4-2X13 TE
14	F06080009	CATENA 1/2 ISO 083 41 MAGLIE				
15	G23440538	ASSE TRASM.CENTR.MT.0,90 HL/ID	AXLE- CENTRAL GEARBOX MT. 0.9	AXE ENTRAINEMENT CENTR. M. 0-9	ACHSE MITTELANTRIEB MT.0-90 HL	EJE TRANS.CENTR.MT.0-90 HL/ID

TAV. 120

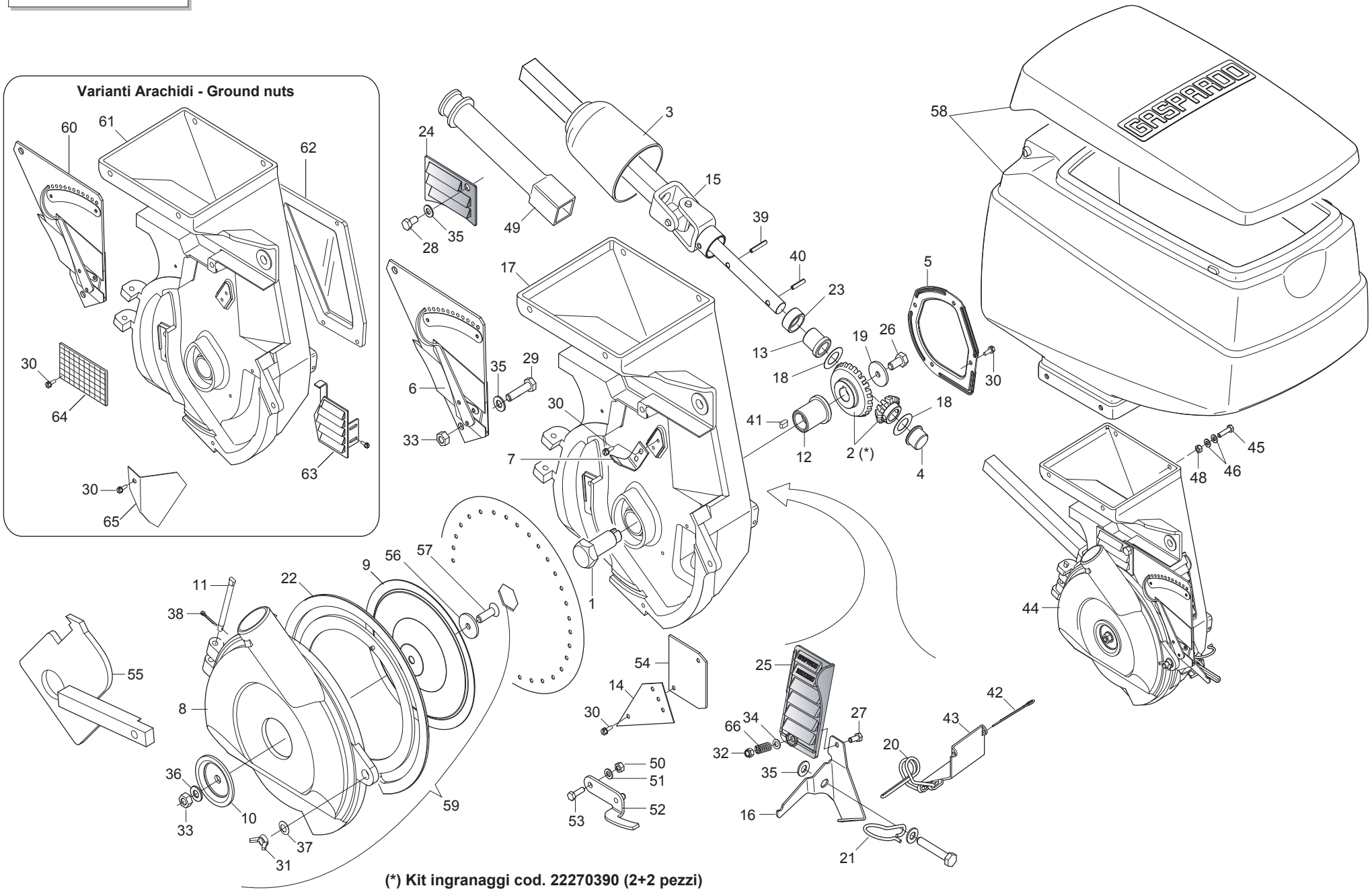

(*) Kit ingranaggi cod. 22270390 (2+2 pezzi)

DISTRIBUTORE SEMI "MT"

TAV. 120

Pos.	Cod.	Descrizione	Description	Description	Benennung	Descripcion
1	G22230046	ASSE TRASMISSIONE DISCO	DISK GEAR AXLE	AXE ENTRAINEMENT DISQUE	ACHSE SCHEIBENANTRIEB	EJE TRANSMISIN DISCO A
2	G22270390	KIT COPPIA CONICA DISTRIB.SEMI	KIT- SEED DISTR. CONICAL PAIR	COUPLE CON DISTR GRAINES (2+2)	KIT KEGELTRIEB SAMEN SZAPPARAT	SET PAR CONICO DISTRIB. SEMILL
3	G66248094	COPRICARDANO SP	UNIVERSAL JOINT COVER SP	COUVRE-CARDAN SP	KARDANABDECKUNG SP	CUBRECARDæN SP
4	G66349008	BOCCOLA	BUSHING	BOITE	BsCHSE	CASQUILLO
5	G22230035	COPERCHIO SCATOLA INGRAN.	GEARWHEEL BOX COVER	COUVERCLE BOITE ENGRENAGE	DECKEL ZAHNRZDERGEHZUSE	TAPA CAJA ENGRAN.
6	G22230040	SELETTORE MOBILE COMPLETO	MOBILE SELECTOR ASSY.	SELECTEUR MOBILE COMPL.	KOMPL. BEWEGLICHER WZHLER	SELECTOR MVIL COMPLETO S
7	G22230041	SELETTORE FISSO	SELECTOR FIXED	SELECTEUR FIXE	FESTER WZHLER	SELECTOR FIJO
8	G15223701	COPERCHIO CORPO MT	BODY COVER MT	COUVERCLE CORPS MT	DECKEL KTRPER MT	TAPA CUERPO MT
9	G22230037	TENUTA GUARNIZIONE	SEAL	BLOQUAGE GARNITURE	DICHTUNG	JUNTA ESTANCA
10	G16620470	TAPPO CENTRALE H=7,5	CENTRAL PLUG H=7.5	BOUCHON CENTRAL H=7,5	ZENTRALER PFROPFEN H=7,5	TAPËN CENTRAL H=7,5
11	G22230039	PERNO COPERCHIO	COVER PIN	PIVOT COUVERCLE	DECKELZAPFEN	PERNO TAPA
12	G66349002	BOCCOLA SINT.BASSOFONDO	BUSHING- SINTERED	BOITE FRITTEE	SYNTH. B_CHSE	CASQUILLO SINT.
13	G22270071	BOCCOLA COLL.SINTER.20X24	20X24 SINTERED COLLARED BUSH	BOITE COLLIER FRITTEE 20X24	ANSCHLUSSBUECHSE SINTER.20X24	CASQUILLO CONEX. SINTER.20X24
14	G22270204	PIASTRA ANTI TRABOCC.SEMI SP	SEED ANTI-OVERFLOW PLATE SP	PLAQUE ANTI-DEBORD.T GRAINES S	SAMENsBERLAUFPLATTE SP	PLACA ANTI DESBORDAMIENTO SEMI
15	G15225130	ASSE PORTA PIGNONE MT COMPL.	COMPL. MT PINION-HOLDER SHAFT	AXE PORTE-PIGNON MT COMPLET	RITZELTRAGACHSE MT KOMPL.	EJE PORTA PIÐËN MT COMPL.
16	G15421151	FERMO MOLLA FALCIONE	CUTTER SPRING STOP	ARRET RESSORT HACHOIR	FESTSTELLVOR. FEDER FUTTERSCHN	BLOQUEO MUELLE GUADA¾ADORA
17	G15225120	CORPO DI DISTRIBUZIONE MT	MT DISTRIBUTION ASSEMBLY	CORPS DE DISTRIBUTION MT	STREUBEH-LTER MT	ELEMENTO DE DISTRIBUCIËN MT
18	G18700220	RONDELLA 16 X28 X0,3 ACC.				
19	F01420037	ROS.M6 6,4X 24X 2 U6593 ZN				
20	G18902951	MOLLA SPEC.ZN SCARICO	SPEC SPRING ZN DISCHARGE	RESSORT TRAPPE VIDANGE	SPEZIALFEDER ZN ENTLADUNG	MUELLE ESPEC. ZN DESCARGA
21	G18903180	MOLLA CONVOGLIATORE MICRO	MICRO CONVEYOR SPRING	RESSORT CONVOYEUR MICRO	FEDER MIKRO FTRDERER	MUELLE CONDUCTOR MICRO
22	G19002620	GUARNIZIONE COP.DISTR.SP530-MT	DISTR. COVER GASKET.SP530	JOINT ETANCH PORTE SP530-MT	DICHTUNG SZAPPARATDECKEL SP530	JUNTA TAPA DISTRIB.SP530
23	G66248219	ANELLO PARAPOLVERE SP-520	DUST COVER RING	BAGUE PARE-POUSSIERE SP-520	STAUBSCHUTZRING SP-520	ANILLO GUARDAPOLVO SP-520
24	G16620540	PORTA DI PROTEZIONE	SAFETY HATCH	PORTE DE PROTECTION	SCHUTZÍFFNUNG	PUERTA DE PROTECCIËN
25	G16620530	PORTA DI CONTROLLO	INSPECTION DOOR	PORTE CONTROLE	KONTROLLTsR	PUERTA DE CONTROL
26	F01020403	VITE M 6X 1X 16 U5739 8.8 ZN	BOLT M 6X16	VIS M 6X16	SCHRAUBE M 6X16	TORNILLO M 6X16
27	F01020382	VITE M 5X0,8X 25 U5739 8.8 ZN	BOLT 5 X25 5739 8.G GALVANIZ.	VIS 5 X25 5739 8.G ZN	SCHRAUBE 5 X25 5739 8.G ZN	TORNILLO 5 X25 5739 8.G ZN
28	F01020432	VITE M 8X1,25X16 U5739 8.8 ZN	BOLT M 8X16	VIS M 8X16	SCHRAUBE M 8X16	TORNILLO M 8X16
29	F01020451	VITE M 8X1,25X45 U5739 8.8 ZN	BOLT M 8X45	VIS M 8X45	SCHRAUBE M 8X45	TORNILLO M 8X45
30	F01070011	VIT.A.4,2X1,41X 9,5 6950 4.8NI	BOLT- SELF-TAPPING 4-2X9-5T.E.	VIS AUTOTAR. 4-2X9-5 T. E. COU	SELBSTSCHNEID. SCHRAUBE 4-2X9-	TORNILLO AUTORROSC. 4-2X9-5
31	F01240024	DADO M 8X1,25 U5448 5.8 ZN	NUT 8 UNI 5448 5.8 ZN	ECROU 8 UNI 5448 5.8 ZN	MUTTER 8 UNI 5448 5.8 ZN	TUERCA 8 UNI 5448 5.8 ZN
32	F01230019	DADO M 5X 0,8 D982 8 ZN	NORM.SELF-LOCKING NUT 5 GALVAN	ECROU AUTOB.NOR.5 ZN	SELBSTSP. MUTTER NOR.5 ZN	TUERCA AUTOB. NOR. 5 ZN
33	F01200244	DADO M 8X1,25 U5588 6.8 ZN	NUT M8	ECROU M8	MUTTER M8	DADO M8
34	F01410023	ROS.M5 5,3X 10X 1 U6592 ZN	WASHER D5 UNI 6592 ZN	RONDELLE D5 UNI 6592 ZN	UNTERLEGSCHEIBE D5 UNI 6592 ZN	ARANDELA D5 UNI 6592 ZN
35	F01410051	ROS.M8 8,4X 17X1,6 U6592 ZN	PLANE WASHER D.8	RONDELLE D.8	SCHEIBE D.8	ARANDELA D.8
36	F01430059	ROS.M8 8,4X 15X0,8 U8842J ZN	WASHER D8 DIN 6798 D.INT.ZN	RONDELLE D8 DIN 6798 D. INT. Z	UNT. SCHEIBE D8 DIN 6798 D. IN	ARANDELA D8 DIN 6798 D.INT.ZN
37	F01460115	ROS.OND. 8,4X 15X0,5 BR D137A	WASHER D8 DIN 137/A	RONDELLE D8 DIN 137/A	UNTERLEGSCHEIBE D8 DIN 137/A	ARANDELA D8 DIN 137/A
38	F02200137	COPIGLIA 2X 15 U1336 ZN	SPLIT PIN 2 X15 1336 GALVAN.	GOUPILLE 2 X15 1336 ZN	SPLINT 2 X15 1336 ZN	PASADOR 2 X15 1336 ZN
39	F02100079	SPINA E.P. 5X 16 U6873 C70 BR				
40	F02100083	SPINA E.P. 5X 24 U6873 C70 BR	PIN EL. 5 X24 DIN 1481	FICHE EL. 5 X24 DIN 1481	SPANNSTIFT 5 X24 DIN 1481	CLAVIJA EL.5 X24 DIN 1481
41	F02150012	LINGUETTA 5X 5X 10 U6604A	TAB 05X5X10 UNI6604	LANGUETTE 05X5X10 UNI6604	FEDERKEIL 05X5X10 UNI6604	LENGsETA 05X5X10 UNI6604
42	F02200200	COPIGLIA 4X 70 U1336 ZN	SPLIT PIN 4 X70 1336 GALVAN.	GOUPILLE 4 X70 1336 ZN	SPLINT 4 X70 1336 ZN	PASADOR 4 X70 1336 ZN
43	G15421870	PORTA DI SCARICO DISTRIBUTORE	DISTRIBUTOR DISCHARGE DOOR	PORTE DE DECHARGEMENT DISTRIB,	ENTLADUNGSTsR SZAPPARAT	PUERTA DESCARGA DISTRIBUIDOR
44	G15225140	CORPO DISTRIBUTORE MT COMPL.	DISTRIBUTOR CASING	CORPS DISTRIBUTEUR	SZAPPARATKTRPER	CUERPO DISTRIBUCIN C
45	F01020404	VITE M 6X 1X20 U5739 8.8 ZN	BOLT 6X20 5739 8.G GALVANIZED	VIS 6X20 5739 8.G ZN	SCHRAUBE 6X20 5739 8.G ZN	TORNILLO 6X20 5739 8.G ZN
46	F01420036	ROS.M6 6,4X 18X 2 U6593 ZN	FLAT WASHER 6-6X 18X2 6593 ZN	ROND. PLATE 6-6X 18X2 6593 ZN	SCHEIBE 6-6X 18X2 6593 ZN	ARAND. PLANA 6-6X 18X2 6593 ZN
47	F01020403	VITE M 6X 1X 16 U5739 8.8 ZN	BOLT M 6X16	VIS M 6X16	SCHRAUBE M 6X16	TORNILLO M 6X16
48	F01220011	DADO M 6X 1 D980 8 ZN	SELF LOCKING NUT M6	ECROU AUTOBL. M6	SELBSTSPERR.MUTTER M6	DADO AUTOBL. M6
49	G15220681	INNESTO RINVIO MT	TRANSMISSION COUPLING MT	ACCOUPLEMENT TRANSMISSION MT	KUPPLUNG VORGELEGE MT	CONEXIN TRANSFERENCIA MT C
50	F01200220	DADO M 5X 0,8 U5588 6.8 ZN	NUT 5 UNI 5588 6.8 GALVANIZED	ECROU 5 UNI 5588 6.8 ZN	MUTTER 5 UNI 5588 6.8 ZN	TUERCA 5 UNI 5588 6.8 ZN
51	F01430035	ROS.M5 5,3X 10X0,6 U8842J ZN	WASHER D5 DIN 6798 D.INT.ZN	RONDELLE D5 DIN 6798 D. INT. Z	UNT. SCHEIBE D5 DIN 6798 D. IN	ARANDELA D5 DIN 6798 D.INT.ZN
52	G16620010	ESPULSORE SEMI BIETOLA	SUGAR BEET EJECTOR	EXPULSEUR BETTES	AUSWERFER RÜBEN	EXPULSOR REMOLACHA
53	F01020381	VITE M5X 0,8X 20 U5739 A2 IX	BOLT 5X20 5739	VIS 5X20 5739	SCHRAUBE 5X20 5739	TORNILLO 5X20 5739
54	G22270133	PIASTRINA ANTI TRABOC.SEMI MIN	MINUTE SEED PLATE SP	PLAQUETTE GRAINES PETITES SP	PLZTTCHEN KLEINE SAMEN SP	PLAQUETA SEMILLAS PEQUE¾AS SP
55	G16620360	DIMA SELETTORE FISSO	POSITION PLATE FOR FIXED SELEC	GABARIT POSITION SELECTEUR FIX	EINSTELLEHRE F_R FIXEN ABSTREI	PLACA PARA LA POSICIËN SELECTO
56	G18701890	RONDELLA D.8,5 SVASATA ZN.	FLARED WASHER D.8.5 ZN.	RONDELLE D.8,5 +VAS+E ZN.	F-CHERSCHEIBE D.8,5 ZN.	ARANDELA Ï 8,5 ABOCINADA ZN.
57	F01030055	VITE M 8X1,25X20 U5933 10.9 ZD	BOLT M 8X20	VIS M 8X20	SCHRAUBE M 8X20	TORNILLO M 8X20
58	G15226240	MONT.SERB.SEME 60 LITRI				
59	G15201081	COPERCHIO CORPO MT COMPL.	BODY COVER MT	COUVERCLE CORPS MT	DECKEL KTRPER MT	TAPA CUERPO MT
60	G22270128	SELETTORE MOBILE ARACHIDI SP	MOBILE SELECTOR- PEANUTS SP	SELECTEUR MOBILE ARACHIDES SP	BEWEGLICHER WZHLER ERDNsSSE SP	SELECTOR MVIL CACAHUETES. S
61	G15422520	CORPO DISTRIBUTORE ARACHIDI SP	PEANUT DISTRIBUTION CASING	CORPS DE DISTRIBUTION ARACHIDE	VERTEILUNGSKTRPER ERDNsSSE	CUERPO DE DISTRIBUC.CACAHUETES
62	G22270132	FINESTRELLA CONTR.ARACHIDI SP	PEANUT CONTRA. WINDOW SP	FENETRE CONTR. ARACHIDES SP	LUKE ERDNUSSKONTROLLE SP	VENTANILLA CONTR. CACAHUETES.
63	G10121100	ASS.PORTA CONTROLLO SP				
64	G22270095	GRIGLIA PROTEZIONE SP	PROTECT. GRID SP	GRILLE PROTECTION SP	SCHUTZGITTER SP	REJILLA PROTECCIN SP G
65	G22270130	PIASTRINA ANTI TRABOC.ARACHIDI	PEANUT CLOSING PLATE	PLAQUETTE FERMETURE ARACH. SP	ABSCHLUSSPLZTTCHEN ERDNsSSE SP	PLAQUETA CIERRE CACAHUETES SP
66	G18904240	MOLLA APERTURA PORTA CONTROLLO	SPRING	RESSORT	FEDER	MUELLE

TAV. 112

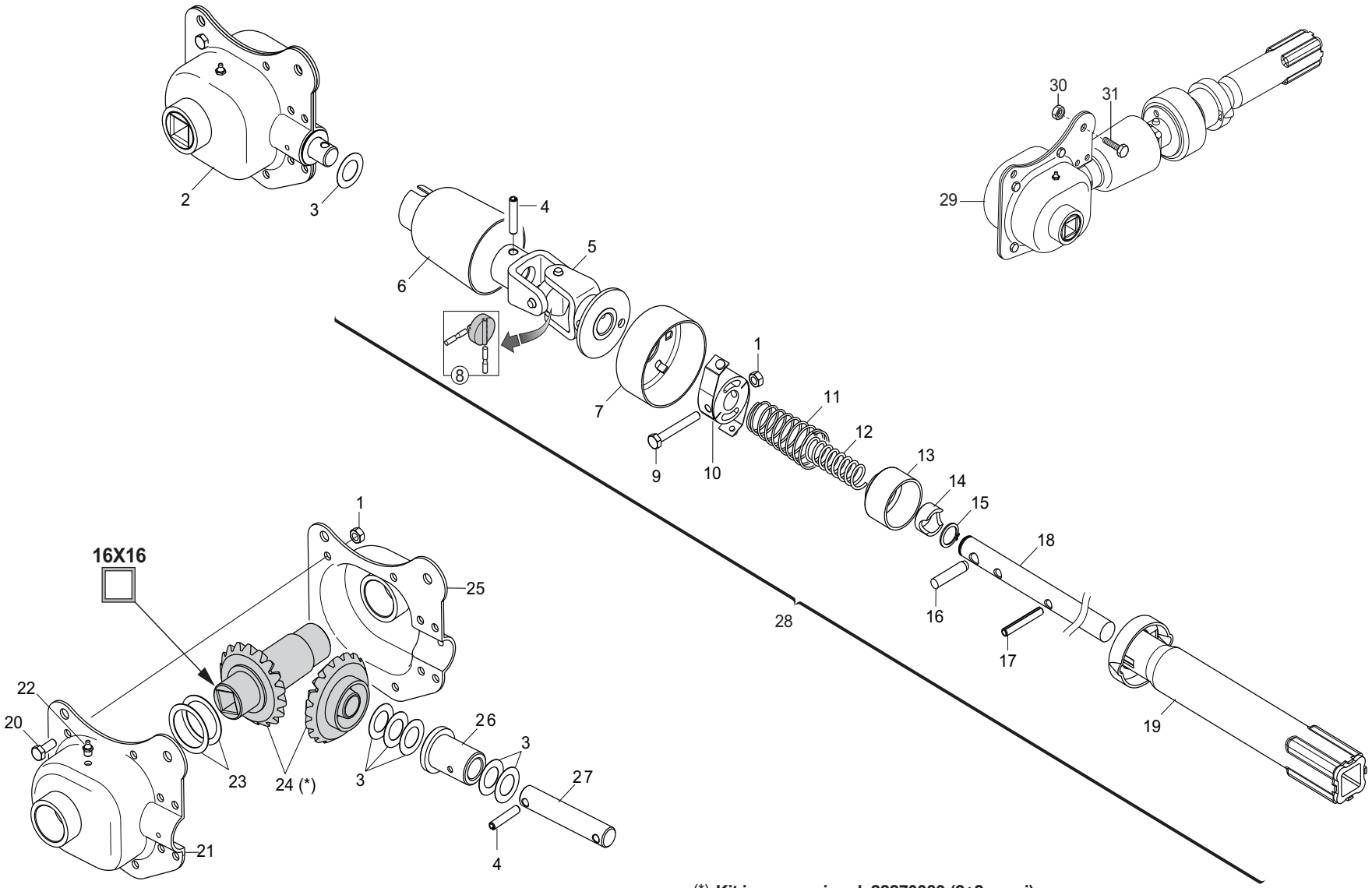

(*) **Kit ingranaggi cod. 22270389 (2+2 pezzi)**

SCATOLA DI RINVIO ELEMENTO SEMINATORE "MT"

TAV. 112

Pos.	Cod.	Descrizione	Description	Description	Benennung	Descripcion
1	F01220011	DADO M 6X 1 D980 8 ZN	SELF LOCKING NUT M6	ECROU AUTOBL. M6	SELBSTSPERR.MUTTER M6	DADO AUTOBL. M6
2	G16033200	MONT.SCATOLA RINVIO Q.16 PLA >	TRANSFER CASE	BOITE RENVOI	VORGELEGEGEHZUSE	CAJA DE DISTRIBUCIN
3	G18700220	RONDELLA 16 X28 X0,3 ACC.				
4	F02100114	SPINA E.P. 6X 30 U6873 C70 BR	ELASTIC PIN 6X30	GOUJON ELASTIQUE 6X30	SPANNHUELSE 6X30	ESPINA ELASTICA 6X30
5	G22270453	SNODO AVVISATORE SP/S	SIGNALLER ARTICULATION SP/S	ARTICULATION SIGNALISATION SP/	HUPGELENK SP/S	ARTICULACIN AVISADOR SP/S A
6	G19002840	COPRICARDANO SUPERIORE	TOP CARDAN JOINT COVER	COUVRE-CARDAN SUPERIEUR	OBERE KARDANABDECKUNG	CUBRECARDæN SUPERIOR
7	G22220071	AVVISATORE ACUSTICO	HOOTER	SIGNALISATION ACOUSTIQUE	HUPE	INDICADOR ACSTICO A
8	G22270454	CROCIERA COMPL. SP/S	SPIDER SP/S	CROSILLON COMPL CARDAN TRANSM	GELENKKREUZ KOMPL. SP/S	CRUCETA COMPL. SP/S
9	F01020041	VITE M 6X 1X 45 U5737 8.8 ZN	BOLT 6 X45 5737 8.G GALVANIZED	VIS 6 X45 5737 8.G ZN	SCHRAUBE 6 X45 5737 8.G ZN	TORNILLO 6 X45 5737 8.G ZN
10	G22220155	ELEM.TENUTA MOLLE COMP.	SPRING SEAL ELEMENT ASSY.	ELEMENT D'ETANCHEITE RESSORTS	DICHTUNGSELEMENT FEDERN KOMP.	ELEM. RESISTENCIA MUELLES COMP
11	G65338039	MOLLA COMP.ZN INNESTO SP	ZN COUPLING COMP. SPRING SP	RESSORT COMPL. ZN ACCOUPLEM.	DRUCKFEDER ZN KUPPLUNG SP	MUELLE COMP.ZN ACOPLAMIENTO SP
12	G65338018	MOLLA COMP.ZN SCATOLA RINV.SP	TRANSM. BOX COMP. SPRING . SP	RESSORT COMPL. ZN TRANSMISSION	DRUCKFEDER ZN VORGELEGEGEHZUSE	MUELLE COMP.ZN CAJA TRANSFER..
13	G66248102	ANELLO SICUREZZA SP	SAFETY RING	BAGUE SECURITE SP	SICHERHEITSRING SP	ANILLO DE SEGURIDAD SP
14	G22220105	BOCCOLA DI SPINTA	THRUST BUSHING	BOITE DE POUSSEE	SCHUBBsCHSE	CASQUILLO DE APRIETE
15	F02050045	ANELLO E. DE 16X 1 U7435 C70	SEEGER RING 16X 1 U7435 C70	BAGUE SEEGER 16 X 1 U7435 C70	SEEGERING 16 X 1 U7435 C70	ANILLO 16X 1 U7435 C70
16	G66248057	SPINA DI SICUREZZA SP	SAFETY PIN SP	BROCHE PLASTIC SECURITE CARDAN	SICHERHEITSSTIFT SP	CLAVIJA DE SEGURIDAD SP
17	F02100121	SPINA E.P. 6X 40 U6873 C70 BR	ELASTIC PIN 6X40	GOUJON ELASTIQUE 6X40	SPANNHUELSE 6X40	PASADOR 6X40
18	G15220691	ASSE AVVISATORE MT	SIGNALLING AXIS MT	AXE AVERTISSEUR MT	ACHSE SIGNALHUPE MT	EJE INDICADOR MT
19	G15220681	INNESTO RINVIO MT	TRANSMISSION COUPLING MT	ACCOUPLEMENT TRANSMISSION MT	KUPPLUNG VORGELEGE MT	CONEXIN TRANSFERENCIA MT C
20	F01020403	VITE M 6X 1X 16 U5739 8.8 ZN	BOLT M 6X16	VIS M 6X16	SCHRAUBE M 6X16	TORNILLO M 6X16
21	G22220103	CONCHIGLIA SX	LEFT SHELL	COQUILLE GCH.	SCHALE LINKS	MOLDE IZQ.
22	F01100011	ING.M 6X1 7663-A 9SMNPB28 ZN	SPHERE NIPPLE M6X1/A	GRAISSEUR A BILLES M6X1/A	KUGELFETTBsCHSE M6X1/A	ENGRAS. DE ESFERAS M6X1/A
23	G18700510	RONDELLA 32 X40 X0,6 ZN				
24	G22270389	2+2 INGR.SCATOLA DI RINVIO >	2+2 INTERM. TRANSM. GEAR BOX	COUPLE CON RENV ANGLE (2+2)	2+2 ZAHNRZDER VORGELEGEGEHZUSE	2+2 ENGRANAJES CAJA DE LA TRAN
25	G22220102	CONCHIGLIA DX	RIGHT SHELL	COQUILLE DRT.	SCHALE RECHTS	MOLDE DER.
26	G17120550	MONT.BOCC.SINTERIZ.18X26L42 >				
27	G22270452	ALBERO SCATOLA RINVIO SP/S	INTERMEDIATE BOX SHAFT	ARBRE TRANSMISSION SP/S	WELLE VORGELEGEGEHZUSE SP/S	æRBOL CAJA DE TRANSMISIN SP/SA
28	G15225740	ASSE AVVISATORE MT COMPL.	COMPLETE HORN SHAFT	AXE AVERTISSEUR MT COMPL.	ACHSE SIGNALHUPE MT KOMPL.	EJE AVISADOR MT COMPL.
29	G15226460	MONT.SCATOLA RINVIO Q.16 EL.MT				
30	F01220222	DADO TRISTOP M 8	NUT- TRISTOP M 8	ECROU TRISTOP M 8	MUTTER TRISTOP M 8	TUERCA TRISTOP M 8
31	F01020440	VITE M 8X1,25X25 U5739 8.8 ZN	BOLT M8 X25 5739 8.8 ZN	VIS M8 X25 5739 8.8 ZN	SCHRAUBE M8 X25 5739 8.8 ZN	TORNILLO M8 X25 5739 8.8 ZN

TAV. 132

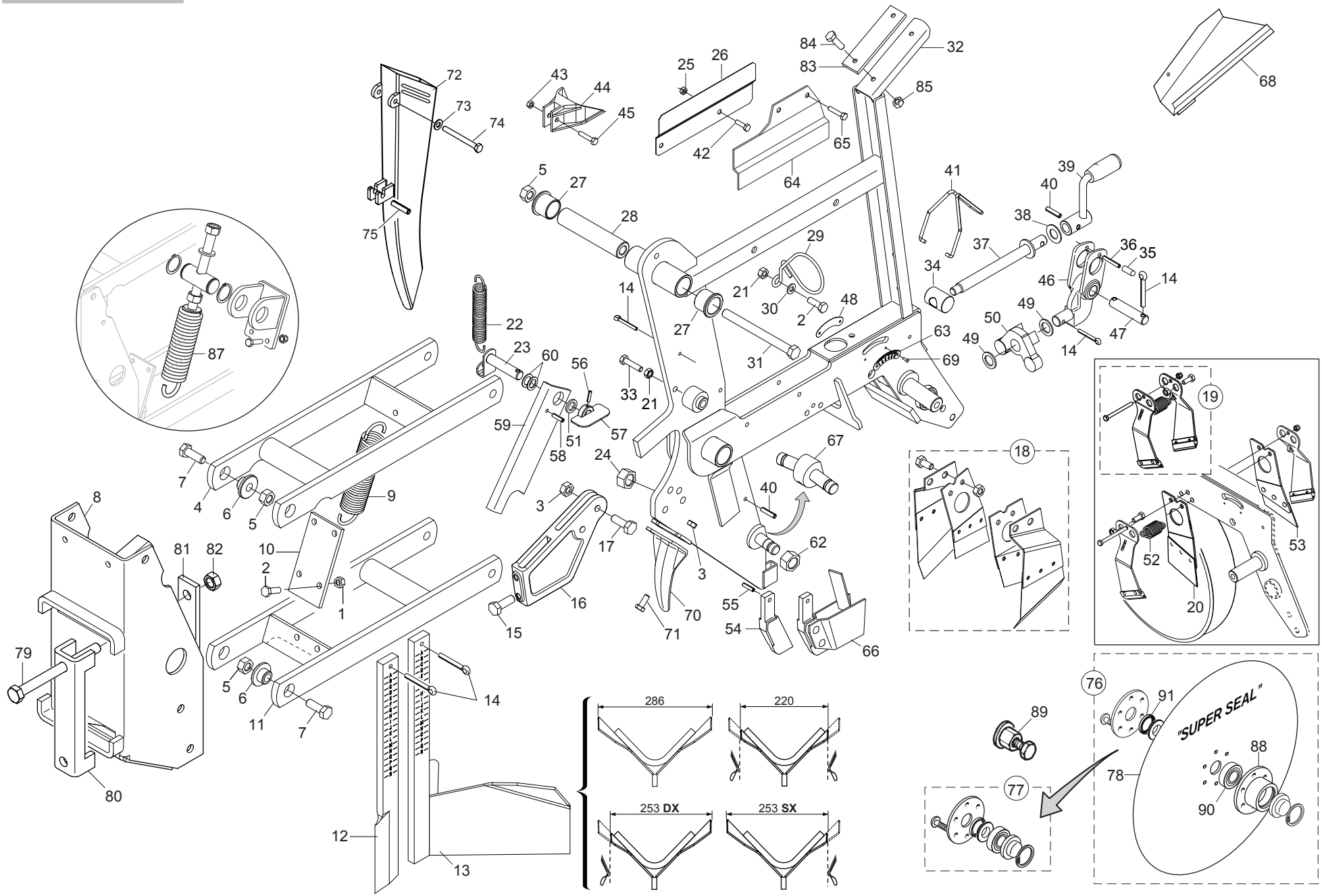

GASPARDO

cod. G19530911

TELAIO ELEMENTO "MT"

TAV. 132

Pos.	Cod.	Descrizione	Description	Description	Benennung	Descripcion
1	F01200244	DADO M 8X1,25 U5588 6.8 ZN	NUT M8	ECROU M8	MUTTER M8	DADO M8
2	F01020440	VITE M 8X1,25X25 U5739 8.8 ZN	BOLT M8 X25 5739 8.8 ZN	VIS M8 X25 5739 8.8 ZN	SCHRAUBE M8 X25 5739 8.8 ZN	TORNILLO M8 X25 5739 8.8 ZN
3	F01220033	DADO M10X 1,5 D980 8 ZN	NUT M10X 1,5 D980 8 ZB	ECRO.M10X 1,5 D980 8 ZB	MUTT.M10X 1,5 D980 8 ZB	TUER.M10X 1,5 D980 8 ZB
4	G15223060	ASS.PARALLELO SUPERIORE	UPPER PARALLEL	PARALL. SUP.	PARALLELOGRAMM OBEN	PARALELO SUPERIOR
5	F01220048	DADO M12X1,75 D980 8 ZN	SELF LOCKING NUT M12X1,75 980V	ECROU AUTOBL. M12X1,75 980-V	SIEHE 00553312	DADO AUTOBL. M12X1,75 980-V
6	G15224630	BOCCOLA BRACCIO	ARM BUSHING	BOITE BRAS	BsCHSE ARM	CASQUILLO BRAZO
7	F01020512	VITE M12X1,75X35 U5739 8.8 ZN	SCREW M 12X35	VIS M 12X35	SCHRAUBE M 12X35	TORNILLO M 12X35
8	G15225150	PIASTRA ATTACCO SEMINATORE	COUPLING PLATE	PLAQUE DE RACCORD	KUPPLUNGSPLATTE	PLACA DE CONEXIN
9	G65337040	MOLLA TRAZ.ELEMENTO MT600	TRACTION SPRING MT600	RESSORT TRACT. ELEMENT MT600	ZUGFEDER ELEMENT MT600	MUELLE TRACC. ELEMENTO MT600
10	G15224410	ATTACCO MOLLA	SPRING CONNECTION	FIXATION RESSORT	FEDERANSCHLUSS	ENGANCHE MUELLE
11	G15223071	PARALLELO INFERIORE	LOWER PARALLEL	PARALL. INF.	PARALLELOGRAMM UNTEN	PARALELO INFERIOR
12	G15420842	TAGLIENTE	EDGE	COUTRE CHASSE-MOTTE	SCHNEIDE	FILO DE CORTE
13	G15224900	SPIANATERRA	SOIL LEVELLER	NIVELEUSE	ERDEBNER	NIVELADORA
14	F02200226	COPIGLIA 5X 25 U1336 ZN	SPLIT PIN 5 X25 1336 GALVAN.	GOUPILLE 5 X25 1336 ZN	SPLINT 5 X25 1336 ZN	PASADOR 5 X25 1336 ZN
15	F01020508	VITE M12X1,75X25 U5739 8.8 ZN	BOLT M 12X25	VIS M 12 X 25	SCHRAUBE M 12 X 25	TORNILLO M 12 X 25
16	G19204000	SUPP.SPIANATERRA CORTO				
17	F01020481	VITE M10X 1,5X40 U5739 8.8 ZN	BOLT 10X40 5739 8.G GALVANIZED	VIS 10X40 5739 8.G ZN	SCHRAUBE 10X40 5739 8.G ZN	TORNILLO 10X40 5739 8.G ZN
18	G15226580	KIT RASCHIATERRA				
19	G15226590	KIT RASCHIATERRA VIDIA	KIT SCRAPERS VIDIA			
20	G15226360	RASCHIATERRA INT.SX	SCRAPER INSIDE LEFT			
21	F01200244	DADO M 8X1,25 U5588 6.8 ZN	NUT M8	ECROU M8	MUTTER M8	DADO M8
22	G65337007	MOLLA TRAZ.ATT.3 PUNTI 12 F SP	TRACTION COUPLING SPRING 3 POI	RESSORT TRACT. ATTELAGE 3 POIN	ZUGFEDER 3 PUNKTE KUPPLUNG 12	MUELLE TRAC. CONEX. 3 PUNTOS 1
23	G22505109	FERMO MOLLA AGGANCIO	SPRING STOP LINKAGE	ARRET RESSORT ATTELAGE	FESTSTELLVORR. FEDER VERBINDUN	BLOQUEO MUELLE ENGANCHE
24	G15220540	DADO M16X1,5 SX	NUT M16X1-5 LEFT	ECROU M16X1-5 GCH	MUTTER M16X1-5 LI	TUERCA M16X1-5 IZQ
25	F01200232	DADO M 6X 1 U5588 6.8 ZN				
26	G15223561	PROTEZIONE DX	RIGHT GUARD	PROTECTION DRT	SCHUTZ RE	PROTECCIN DER P
27	G66349003	BOCCOLA SINT.	BUSHING- SINTERED	BOITE FRITTEE	SYNTH. BUECHSE	CASQUILLO SINT.
28	G22505108	MOZZO BRACCI PARALLELOGRAMMA	PARALLELOGRAM ARM HUB	MOYEU BRAS PARALLELOGRAMME	NABE PARALLELOGRAMM ARME	CUBO BRAZOS PARALELOGRAMA
29	G18903140	MOLLA GUIDATUBO	PIPE GUIDE SUPPORT	RESSORT GUIDE-TUBE	FEDER ROHRFsHRUNG	MUELLE GUA TUBOS A
30	F01410051	ROS.M8 8,4X 17X1,6 U6592 ZN	PLANE WASHER D.8	RONDELLE D.8	SCHEIBE D.8	ARANDELA D.8
31	F01020179	VITE M12X1,75X150 5737 8.8 ZN	BOLT 12X150 5737 8.G GALVANIZ.	VIS 12X150 5737 8.G ZN	SCHRAUBE 12X150 5737 8.G ZN	TORNILLO 12X150 5737 8.G ZN
32	G15225851	CORPO CENTRALE MT	CENTRAL CASING	CORPS CENTR. MT	MITTELKTRPER MT	CUERPO CENTRAL MT
33	F01020449	VITE M 8X1,25X35 U5739 8.8 ZN	BOLT M 8X35	VIS M 8X35	SCHRAUBE M 8X35	TORNILLO M 8X35
34	G22230063	ELEMENTO ARTICOLATO	ARTICULATED ELEMENT	ELEMENT ARTICULE	GELENKELEMENT	ELEMENTO ARTICULADO
35	F05100193	CAPPUCCIO 5,95X19,05 GIALLO	CAP	BOUCHON	DECKEL	CORCHO
36	F02100126	SPINA E.P. 6X 60 U6873 C70 BR	PIN EL. 6 X60 DIN 1481	FICHE EL. 6 X60 DIN 1481	SPANNSTIFT 6 X60 DIN 1481	CLAVIJA EL.6 X60 DIN 1481
37	G22505058	VITE DI REGOLAZIONE POSTERIORE	REAR ADJUSTMENT BOLT	VIS DE REGLAGE ARRIERE	HINTERE EINSTELLSCHRAUBE	TORNILLO DE REGULACIN TRASEROS
38	G20970149	RONDELLA D.15X28X1,5	WASHER D.15X28X1-5	RONDELLE D. 15X28X1-5	UNTERLEGSCHEIBE D.15X28X1-5	ARANDELA D.15X28X1-5
39	G22270235	MANIGLIA REGOLAZIONE B4	ADJUSTMENT HANDLE B4	POIGNEE REGLAGE B4	EINSTELLGRIFF B4	MANIJA REGULACIN B4 M
40	F02100109	SPINA E.P. 6X 24 U6873 C70 BR	PIN EL. .6 X24 DIN 1481	FICHE EL. 6 X24 DIN 1481	SPANNSTIFT 6 X24 DIN 1481	CLAVIJA EL.6 X24 DIN 1481
41	G18903741	MOLLA FERMO MANIGL.MAGICA>2004	HANDLE STOP SPRING MAGICA 2004	RESSORT ARRET POIG.MAGICA 2004	FEDER GRIFFSPERRE MAGICA 2004	MUELLE BLOQUEO MAN. MAGICA 04
42	F01020403	VITE M 6X 1X 16 U5739 8.8 ZN	BOLT M 6X16	VIS M 6X16	SCHRAUBE M 6X16	TORNILLO M 6X16
43	F01230022	DADO M 6X 1 D982 8 ZN	NORM.SELF-LOCKING NUT 6 GALVAN	ECROU AUTOB.NOR.6 ZN	SELBSTSP. MUTTER NOR.6 ZN	TUERCA AUTOB. NOR. 6 ZN
44	G19002700	PROTEZIONE FOTOCELLULA >	PHOTOCELL PROTECTION	PROTECT CAPT PHOTOC SP3-MT-MG>	SCHUTZ PHOTOZELLE	PROTECCIN FOTOCLULA PR
45	F01020408	VITE M 6X 1X 30 U5739 8.8 ZN	BOLT M 6X1X30	VIS M 6X1X30	SCHRAUBE M 6X1X30	TORNILLO M 6X1X30
46	G15224691	SUPP.BILANC.REG.RUOTE PROFOND.				
47	G22505056	PERNO	PIN	PIVOT	ZAPFEN	PERNO
48	G19705290	TARGHETTA REG.DX RUOTE PROFOND	PLATE	PLAQUET	PLATTE	PLACA
49	G18701820	RONDELLA 16,5X25X1,0 ZN	WASHER 16.5 X 25 X 1- GALVAN.	RONDELLE 16,5 X25 X1 ZN	UNTERLEGSCHEIBE 16,5 X25 X1 ZN	ARANDELA 16,5 X25 X1 ZN
50	G19203130	BILANCIERE PRFONDITA'	DEPTH EQUALISER	BALANCIER PROFONDEUR	KIPPHEBEL TIEFE	BALANCÍN PROFUNDIDAD
51	G20970035	RONDELLA 32X4X13	WASHER 32X4X13	RONDELLE 32X4X13	UNTERLEGSCHEIBE 32X4X13	ARANDELA 32X4X13
52	G18701880	RONDELLA DI SPINTA	WASHER	RONDELLE	UNTERLEGSCHEIBE	ARANDELA
53	G15226340	RASCHIATERRA INT.DX	SCRAPER INSIDE RIGHT			
54	G19203121	TAGLIENTE INTERNO DISCHI MT	INNER DISC CUTTING EDGE MT	TRANCHANT INT+RIEUR DISQUES MT	INNERE SCHNEIDE SCHEIBEN MT	FILO INTERNO DISCOS MT
55	F02100106	SPINA E.P. 6X 20 U6873 C70 BR	PIN 6X 20	GOUJON 6X 20	BOLZEN 6X 20	ESPINA 6X 20

TAV. 132

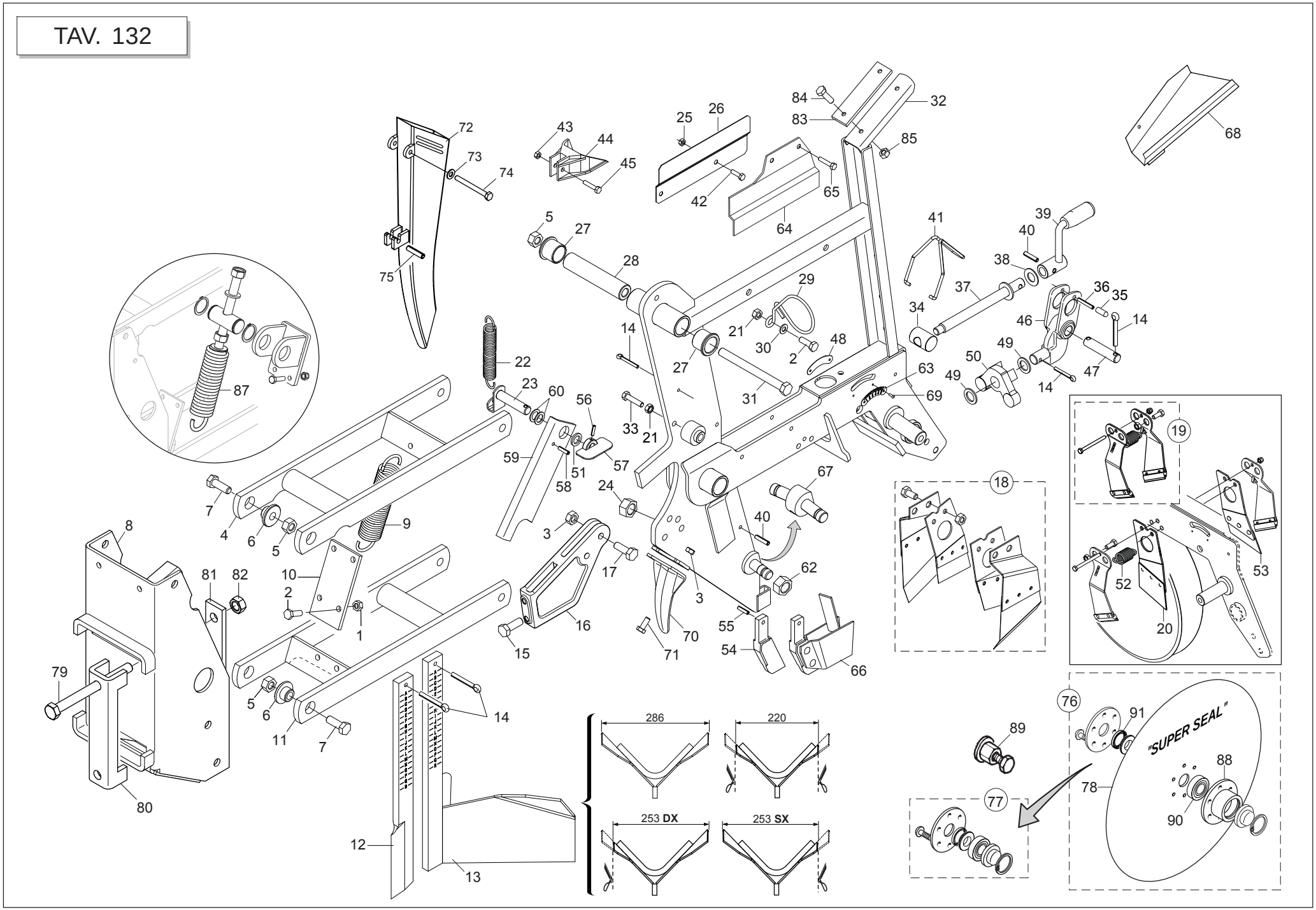

GASPARDO

TELAIO ELEMENTO "MT"

TAV. 132

Pos.	Cod.	Descrizione	Description	Description	Benennung	Descripcion
56	F02100062	SPINA E.P. 4X 24 U6873 C70 BR	PIN EL. 4 X24 DIN 1481	FICHE EL. 4 X24 DIN 1481	SPANNSTIFT 4 X24 DIN 1481	CLAVIJA EL.4 X24 DIN 1481
57	G22505048	FERMO LEVA	LEVER STOP	ARRET LEVIER	FESTSTELLVORRICHTUNG HEBEL	BLOQUEO PALANCA
58	F02100083	SPINA E.P. 5X 24 U6873 C70 BR	PIN EL. 5 X24 DIN 1481	FICHE EL. 5 X24 DIN 1481	SPANNSTIFT 5 X24 DIN 1481	CLAVIJA EL.5 X24 DIN 1481
59	G22505110	LEVA AGGANCIO ELEMENTO	ELEMENT COUPLING LEVER	LEVIER ATTELAGE ELEMENT	KUPPLUNGSHEBEL ELEMENT	PALANCA ENGANCHE ELEMENTO
60	G20970100	RONDELLA 30X0,5X22 ACC.	WASHER 30X0-5X22 ACC.	RONDELLE 30X0-5X22 ACIER	UNTERLEGSCHEIBE 30X0-5X22 ACC.	ARANDELA 30X0-5X22 ACC.
61	G19700810	DECAL.REGOLAZIONE PROFONDITA'	DEPTH ADJUSTMENT STICKER	DECALC. REGLAGE PROFONDEUR	ABZIEHB. EINST. TIEFE	CAL.REGULACIN PROFUNDIDAD
62	F01200442	DADO M16X 1,5 U5589 6.8 ZN	NUT 16X1-5 UNI 5589 6.8 GALVAN	ECROU 16X1-5 UNI 5589 6.8 ZN	MUTTER 16X1-5 UNI 5589 6.8 ZN	TUERCA 16X1-5 UNI 5589 6.8 ZN
63	G19705280	TARGHETTA REG.SX RUOTE PROFOND	PLATE	PLAQUET	PLATTE	PLACA
64	G15223571	PROTEZIONE SX	LEFT GUARD	PROTECTION GCH	SCHUTZ LI	PROTECCIN IZQ P
65	F01070047	VIT.A.3,5X1,34X 9,5 6954 4.8NI	BOLT 3-5X 9-5 DIN 7981	VIS 3-5X 9-5 DIN 7981	SCHRAUBE 3-5X 9-5 DIN 7981	TORNILLO 3-5X 9-5 DIN 7981
66	G15225970	FALCIONE CORTO INT.DISCHI COMP	COMPL. DISKS INNER COULTER	HACHOIR INTERNE DISQUES COMPL.	S-SCHARSCHEIBEN INNEN KOMPL.	ARADO INTERNO DISCOS COMPL.
67	G15223140	ASSE DISCHI	DISC SPINDLE	AXES DISQUES	SCHEIBENACHSE	EJE DISCOS
68	G15224500	SCIVOLO SCARICO SEMI	SEED DISCHARGE CHUTE	LANCOIR DECHARGE GRAINES	RUTSCHE SAMENENTLADUNG	PLANO INCLINADO DESCARGA SEMIL
69	F02250066	RIVETTO STR. 3X 9 U9200A AL	POP RIVET 3X9 ALUMINIUM	RIVET 3 X 9 ALL	REISSNIETE 3 X 9 ALU	REMACHE DESGAR. 3 X 9 AL
70	G15225860	PROTEZIONE DISCHI	DISC PROTECTION	PROTECTION DISQUE	DISCSCHUTZ	PROTECCIN DISCO
71	F01020470	VITE M10X 1,5X20 U5739 8.8 ZN	BOLT M 10X20	VIS M 10X20	SCHRAUBE M 10X20	TORNILLO M 10X20
72	G19002910	CONVOGLIATORE SEME PLASTICA	PLASTIC SEED CONVEYOR	CONVOYEUR GRAINE PLASTIQUE	SAMENFTRDERER PLASTIK	TRANSPORTADOR SEMILLAS DE PLAS
73	F01410037	ROS.M6 6,4X12,5X1,6 U6592 ZN	PLANE WASHER D.6	RONDELLE D.6	SCHEIBE D.6	ARANDELA D.6
74	F01020043	VITE M 6X 1X 60 U5737 8.8 ZN	BOLT 6 X60 5737 8.G GALVANIZED	VIS 6 X60 5737 8.G ZN	SCHRAUBE 6 X60 5737 8.G ZN	TORNILLO 6 X60 5737 8.G ZN
75	F02100110	SPINA E.P. 6X 26 U6873 C70 BR	PIN EL. 6 X26 DIN 1481	FICHE EL.6 X26 DIN 1481	SPANNSTIFT 6 X26 DIN 1481	CLAVIJA EL.6 X26 DIN 1481
76	G15225500	DISCO ASSOLC.PROTETTO COMPL.	COMPL. PROTECTED DISC COULTER	DISQUE DU SOC PROT+G+ COMPLET	GESCH_TZTE FURCHENFORMSCHEIBE	DISCO SURC.PROTEGIDO COMPL.
77	G15226600	KIT X DISCO SUPER SEAL				
78	G13825091	DISCO ASSOLCATORE D.373	FURROW OPENER DISK D.373	DISQUE D. 373 6 T.D.6	SCHEIBE SZSCHARENREISSER D.373	DISCO SURCADOR D.373
79	F01020225	VITE M14X 2X160 U5737 8.8 BR	BOLT M 14 X160 5737 8.G	VIS M 14 X160 5737 8.G	SCHRAUBE M 14 X160 5737 8.G	TORNILLO M 14 X160 5737 8.G
80	G15110091	SCONTRO A U	STRIKER	BRIDE 150 MM	ANSCHLAG	ELEMENTO DE EMPALME
81	G22505037	SCONTRO PIASTRA ATTACCO MT	STRIKER PLATE ATT. MT	BUTEE PLAQUE FIXATION MT	KUPPLUNGSPLATTEN-ANSCHLAG MT	ELEMENTO DE EMPALME PLACA CONE
82	F01200306	DADO M14X 2 U5588 6.8 ZN	NUT M14X2	ECROU M14X2	MUTTER M14X2	DADO M14X2
83	G22505102	SCONTRO RINFORZO SERBATOIO	STRIKER PLATE TANK REINFORCEME	BUTEE RENFORCEMENT RESERVOIR	BEHZLTER VERSTZRKUNSANSCHLAG	ELEM.EMPALME REFUERZO DEPSITOC
84	F01020404	VITE M 6X 1X20 U5739 8.8 ZN	BOLT 6X20 5739 8.G GALVANIZED	VIS 6X20 5739 8.G ZN	SCHRAUBE 6X20 5739 8.G ZN	TORNILLO 6X20 5739 8.G ZN
85	F01220011	DADO M 6X 1 D980 8 ZN	SELF LOCKING NUT M6	ECROU AUTOBL. M6	SELBSTSPERR.MUTTER M6	DADO AUTOBL. M6
86	G15225980	FALCIONE CORTO INT.DISCHI	DISKS INNER COULTER	HACHOIR INTERNE DISQUES	S-SCHARSCHEIBEN INNEN	ARADO INTERNO DISCOS
87	G15226270	MOLLA COMPL.				
88	G15223651	SUPPORTO CUSCINETTO DISCO	DISK BEARING SUPPORT	SUPPORT PALIER DISQUE	SCHEIBENLAGERBsCHSE	SOPORTE COJINETE DISCO
89	G15225240	ESTRATTORE DISCHI ELEMENTO MT	SEED PLATE EXTRACTOR ELEM. MT	EXTRACTEUR DISQUE ELEMENT MT	SCHEIBENAUSZIEHER ELEMENT MT	EXTRACTOR DISCOS ELEMENTO MT
90	F04010084	CUSC.D17D47 B22,2 3303 LLU/DDU	BEARING 3303 2RS	PALIER 3303 2RS	LAGER 3303 2RS	COJINETE 3303 2RS
91	F03011075	AN. TENUTA B1OF 24X32X4	SEALING RING G24X32X4	BAGUE D'ETANCHEITE G24X32X4	DICHTRING G24X32X4	ANILLO AISLADOR G24X32X4

TAV. 142

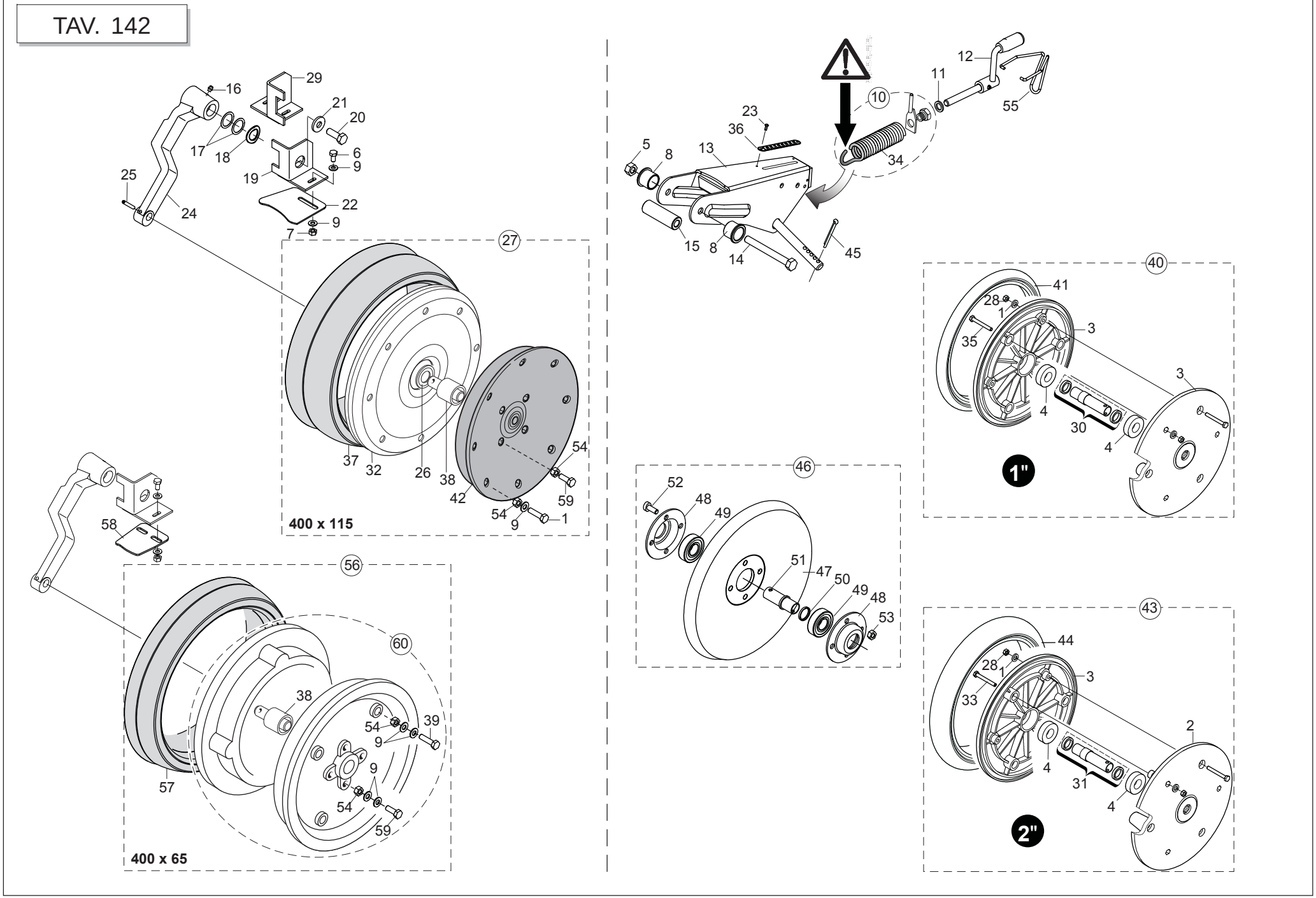

GASPARDO

RUOTE DI DI PROFONDITA' E DI COMPRESSIONE "MT"

TAV. 142

Pos.	Cod.	Descrizione	Description	Description	Benennung	Descripcion
1	F01020070	VITI M 8X1,25X45 U5737 8.8 ZN	BOLT 8 X45 5737 8.G GALVANIZED	VIS 8 X45 5737 8.G ZN	SCHRAUBE 8 X45 5737 8.G ZN	TORNILLO 8 X45 5737 8.G ZN
2	F06120147	SEMICERCHIO PLA RUOTA 2"	PLASTIC HALF RIM 2' WHEEL	DEMI-JANTE PLAST. ROUE 2"	HALBFELGE PLA RAD 2"	SEMIARO PL-ST.RUEDA 2"
3	F06120146	SEMICERCHIO PLA RUOTA 1"	PLASTIC HALF RIM 1' WHEEL	DEMI-JANTE PLAST. ROUE 1"	HALBFELGE PLA RAD 1"	SEMIARO PL-ST.RUEDA 1"
4	F04010131	CUSC.D20 D42 B12 6004-2RSH EX>	BEARING 6004 2RS EX. SKF	ROULEMENT 6004	LAGER 6004	COJINETE 6004
5	F01220048	DADO M12X1,75 D980 8 ZN	SELF LOCKING NUT M12X1,75 980V	ECROU AUTOBL. M12X1,75 980-V	SIEHE 00553312	DADO AUTOBL. M12X1,75 980-V
6	F01020436	VITE M 8X1,25X 20 U5739 8.8 ZN	BOLT M 8X20	VIS M 8X20	SCHRAUBE M 8X20	TORNILLO M 8X20
7	F01200244	DADO M 8X1,25 U5588 6.8 ZN	NUT M8	ECROU M8	MUTTER M8	DADO M8
8	G66349003	BOCCOLA SINT.	BUSHING- SINTERED	BOITE FRITTEE	SYNTH. BUECHSE	CASQUILLO SINT.
9	F01410051	ROS.M8 8,4X 17X1,6 U6592 ZN	PLANE WASHER D.8	RONDELLE D.8	SCHEIBE D.8	ARANDELA D.8
10	G15226280	INDICATORE PROFONDITA' COMPL				
11	F01410076	ROS.M12 13X 24X2,5 U6592 ZN	PLANE WASHER D12 UNI 6592 ZN	RONDELLE D12 UNI 6592 ZN	SCHEIBE D12 UNI 6592 ZN	ARANDELA D12 UNI 6592 ZN
12	G15220960	MANIGLIA REGOLAZIONE	ADJUSTMENT HANDLE	POIGNEE REGLAGE	EINSTELLGRIFF	MANIJA REGULACI0N
13	G15224611	ASS.SUPP.RUOTE COMPRESSIONE				
14	F01020170	VITE M12X1,75X100 5737 8.8 ZN	BOLT M 12X100	VIS M 12X100	SCHRAUBE M 12X100	TORNILLO M 12X100
15	G22505059	MOZZO POSTERIORE	REAR HUB	MOYEU ARRIERE	HINTERNABE	CUBO TRASERO
16	F01100011	ING.M 6X1 7663-A 9SMNPB28 ZN	SPHERE NIPPLE M6X1/A	GRAISSEUR A BILLES M6X1/A	KUGELFETTBsCHSE M6X1/A	ENGRAS. DE ESFERAS M6X1/A
17	F01440079	ROND.RASAM.26,2X34,8X0,5 IX	WASHER D.26,2X34,8X0,5	RONDELLE D.26,2X34,8X0,5	UNTERLEGSCHEIBE D.26,2X35X0,5	ARANDELA D.26,2X34,8X0,5
18	G18701880	RONDELLA DI SPINTA	WASHER	RONDELLE	UNTERLEGSCHEIBE	ARANDELA
19	G15223831	ATT.RASCHIATERRA SX	LEFT SOIL SCRAPER ATTACHMENT.	CONNEXION RACLEUR GCH	ERDSCHABERANSCHLUSS LI	CONEX. RASCADOR DE TIERRA IZQ
20	F01020510	VITE M12X1,75X30 U5739 8.8 ZN	BOLT M 12X30	VIS M 12X30	SCHRAUBE M 12X30	TORNILLO M 12X30
21	G20970035	RONDELLA 32X4X13	WASHER 32X4X13	RONDELLE 32X4X13	UNTERLEGSCHEIBE 32X4X13	ARANDELA 32X4X13
22	G15223862	RASCHIATERRA RUOTE COMPRESS.	SOIL SCRAPER PRESS WHEEL	D+CROTTOIR ROUES DE COMPRESSIO	ABSTREIFER DRUCKROLLE	RASCADOR TIERRA RUEDAS COMPRES
23	F02250066	RIVETTO STR. 3X 9 U9200A AL	POP RIVET 3X9 ALUMINIUM	RIVET 3 X 9 ALL	REISSNIETE 3 X 9 ALU	REMACHE DESGAR. 3 X 9 AL
24	G22505132	BRACCIO RUOTA PROFONDITA'	DEPTH WHEEL ARM-	BRAS ROUE PROFONDEUR	TIEFENRADARM	BRAZO RUEDA DE PROFUNDIDAD
25	F02100118	SPINA E.P. 6X 36 U6873 C70 BR	PIN EL. 6 X36 DIN 1481	FICHE EL. 6 X36 DIN 1481	SPANNSTIFT 6 X36 DIN 1481	CLAVIJA EL.6 X36 DIN 1481
26	F01440083	ROS. 17X40X0,5 D988 ST2K60 BR	WASHER 17X40X0,5 D988 ST2K60	RONDELLE 17X40X0,5 D988 ST2K60	SCHEIBE 17X40X0,5 D988 ST2K60	ARANDELA 17X40X0,5 D988 ST2K60
27	F06120090	RUOTA PROFONDITA' TAMBURATA MT	DEPTH WHEEL MT			
28	F01230022	DADO M 6X 1 D982 8 ZN	NORM.SELF-LOCKING NUT 6 GALVAN	ECROU AUTOB.NOR.6 ZN	SELBSTSP. MUTTER NOR.6 ZN	TUERCA AUTOB. NOR. 6 ZN
29	G15223850	ATTACCO RASCHIATERRA DX *				
30	G15226610	KIT DIST./GUARNIZIONI RUOTA V1				
31	G15226620	KIT DIST./GUARNIZIONI RUOTA V2				
32	G56345120	SEMICERCHIO FE NERO 400X115	HALF RIM 400X115	DEMI-JANTE 400X115	HALBFELGE 400X115	SEMIARO 400X115
33	F01020042	VITE M 6X 1X 50 U5737 8.8 ZN	BOL.M 6X 1X 50 U5737 8.8 ZG	VIS 6 X50 5737 8.G ZN	SCHRAUBE 6 X50 5737 8.G ZN	TORNILLO 6x50 5737 8.G ZN
34	G15226270	MOLLA COMPL.				
35	F01020406	VITE M 6X 1X 25 U5739 8.8 ZN	BOLT M 6X25	VIS M 6X25	SCHRAUBE M 6X25	TORNILLO M 6X25
36	G19703480	TARGHETTA REG.RUOTE COMPRESS.	PLATE	PLAQUET	PLATTE	PLACA
37	F06120188	COPERTURA RUOTA PROFONDITA' MT	DEPTH WHEEL COVERING MT	COUVERTURE ROUE PROFONDEUR MT	MANTEL TIEFENRAD' MT	CUBIERTA RUEDA PROFUNDIDAD MT
38	F04100040	CUSC. POMPAACQUA K094	BEARING RING 400X115	PALIER ROUE JAUG JANTE 400X115	LAGER REIFEN 400X115	COJINETE LLANTA 400X115
39	F01020436	VITE M 8X1,25X 20 U5739 8.8 ZN	BOLT M 8X20	VIS M 8X20	SCHRAUBE M 8X20	TORNILLO M 8X20
40	F06120076	RUOTA DA 1 POLLICE MT	RUBBER WHEEL 1'X12' PLA.2 BEAR	ROUE CAOUTCHOUTEE	GUMMIRAD	RUEDA DE CAUCHO
41	F06120181	ANELLO IN GOMMA 1 POLLICE MT	RUBBER RING 1X12'	COUVERT FARMF ROUE COMPR 1"X12	MANTEL FARMF.R.DRUCK .MT	CUBIERTA FARMF. R. COMPR. MT
42	G56345119	SEMICERCHIO PLAST.NERO 400X115	PLASTIC WHEEL HALF RIM 400X115	DEMI-JANTE PLAST. ROUE 400X115	HALBFELGE PLA RAD 400X115	SEMIARO PL-ST.RUEDA 400X115
43	F06120075	RUOTA DA 2 POLLICI MT	RUBBER WHEEL 2'X13' PLA.2 BEAR	ROUE CAOUTCHOUTEE	GUMMIRAD	RUEDA DE CAUCHO
44	F06120165	COPERTURA 2' X 13'	RUBBER RING 2X13'	COUVERT FARMF ROUE COMPR 2"X13	MANTEL 2' X 13'	CUBIERTA 2' X 13'
45	F02200227	COPIGLIA 5X 30 U1336 ZN	SPLIT PIN 5 X30 1336 GALVAN.	GOUPILLE 5 X30 1336 ZN	SPLINT 5 X30 1336 ZN	PASADOR 5 X30 1336 ZN
46	G15224790	RUOTA GHISA POST.COMPL.	COMPL. REAR CAST IRON WHEEL	ROUE FONTE ARRI+RE COMPL+TE	HINTERES GUSSEISENRAD KOMPL.	RUEDA FUNDICIËN TRAS.COMPL.
47	G15224800	RUOTA POSTERIORE GS	REAR WHEEL	ROUE ARRIERE	HINTERRAD	RUEDA TRASERO
48	G16242190	SUPPORTO CUSCINETTO	BEARING SUPPORT	SUPPORT PALIER	LAGERBsCHSE	SOPORTE COJINETE
49	F04010156	CUSC.d20 D47 B14 6204 2RSH				
50	G15224810	BOCCOLA 20,5X25X3	BUSH 20.5X25X3	DOUILLE 20,5X25X3	BUCHSE 20,5X25X3	MANGUITO 20,5X25X3
51	G15423850	BOCCOLA RUOTA FERRO	STEEL WHEEL BUSH	DOUILLE ROUE FER	BÜCHSE EISENRAD	BUJE RUEDA DE HIERRO
52	F01040091	VITE M 8X1,25X20 U5931 8.8 ZN	SCREW 8 X20 5931 8.G ZN	VIS 8 X20 5931 8.G ZN	SCHRAUBE 8 X20 5931 8.G ZN	TORNILLO 8 X20 5931 8.G ZN
53	F01220022	DADO M 8X1,25 D980 8 ZN	SELF LOCKING NUT M8X1,25 980V	ECROU AUTOBL. M8X1,25 980-V	SELBSTSP.MUTT. M8X1,25 980-V	DADO AUTOBL. M8X1,25 980-V
54	F01230034	DADO M 8X1,25 D982 8	SELF LOCKING NUT M8X1,25	ECROU AUTOBL. M8X1,25	SELBSTSP.MUTT. M8X1,25	DADO AUTOBL. M8X1,25
55	G18903741	MOLLA FERMO MANIGL.MAGICA>2004	HANDLE STOP SPRING MAGICA 2004	RESSORT ARRET POIG.MAGICA 2004	FEDER GRIFFSPERRE MAGICA 2004	MUELLE BLOQUEO MAN. MAGICA 04
56	G15225020	RUOTA PROFONDITA' MT L.65 COM.	DEPTH WHEEL MT ASSY.L.65	ROUE PROFONDEUR MT COMPL.	TIEFENRAD MT KOMPLETT	RUEDA PROF.MT COMPL.
57	F06120189	COPERTURA FARMFLEX 400X65	COVERING FARMFLEX 400X65	COUVERTURE FARMFLEX 400X65	MANTEL FARMFLEX 400X65	CUBIERTA FARMFLEX 400X65
58	G15225012	RASCHIATERRA RUOTE COMPRES.65	SOIL SCRAPER PRESS WHEEL 65	D+CROTTOIR ROUES DE COMPRESSIO	ABSTREIFER DRUCKROLLE 65	RASCADOR TIERRA RUEDAS COMPRES
59	F01020440	VITE M 8X1,25X25 U5739 8.8 ZN	BOLT M8 X25 5739 8.8 ZN	VIS M8 X25 5739 8.8 ZN	SCHRAUBE M8 X25 5739 8.8 ZN	TORNILLO M8 X25 5739 8.8 ZN
60	F06120145	SEMICERCHIO 400X65	HALF RIM 400X65	DEMI-JANTE 400X65	HALBFELGE 400X65	SEMIARO 400X65

TAV. 150

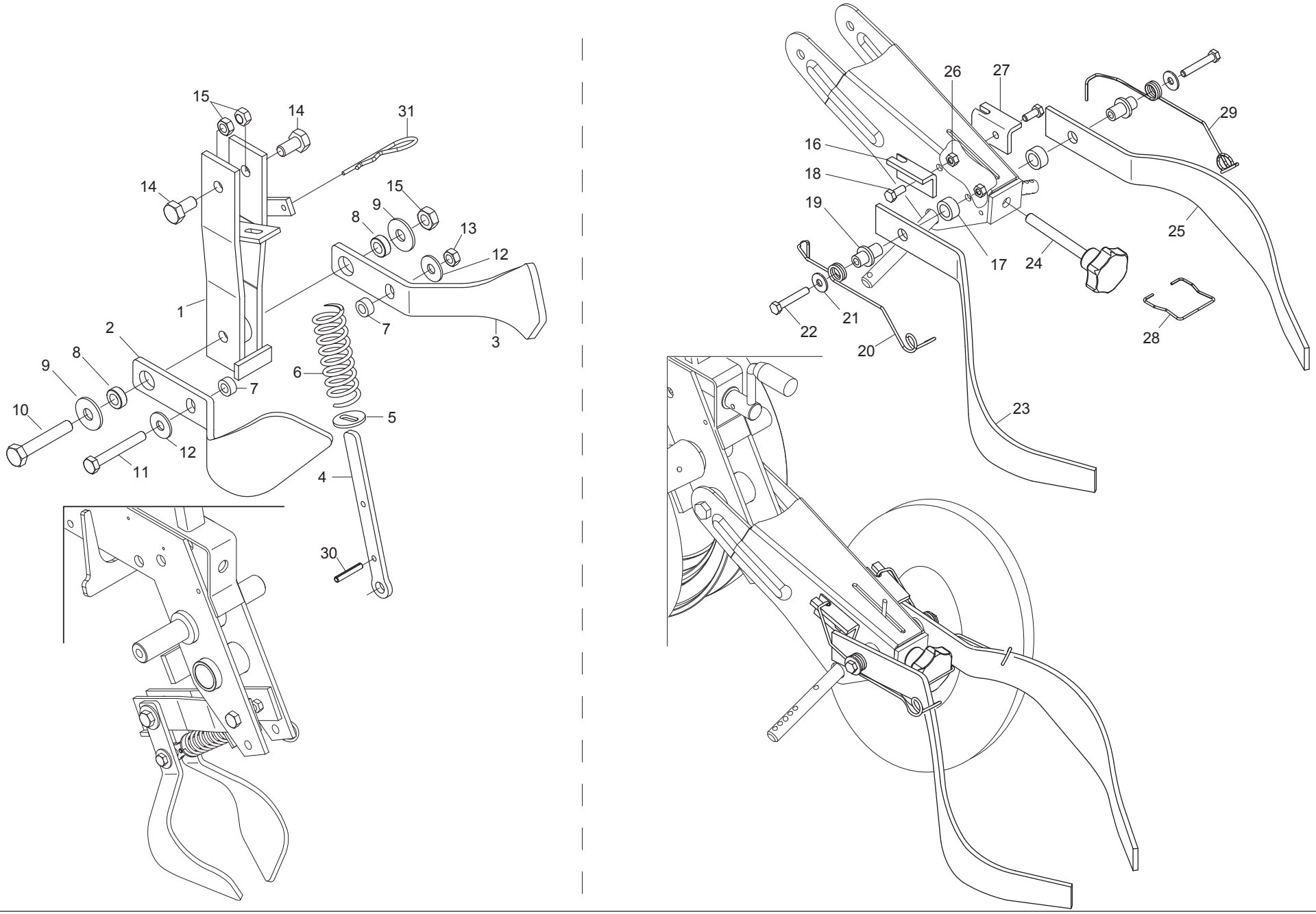

GASPARDO

COPRISEMI ANTERIORI E POSTERIORI PER RUOTE A “V” “MT”

TAV. 150

Pos.	Cod.	Descrizione	Description	Description	Benennung	Descripcion
1	G15224182	SUPPORTO COPRISEME	SEED COVER SUPPORT	SUPPORT COUVRE-GRAINES	SAMENABDECKERHALTERUNG	SOPORTE CUBRESEMILLAS
2	G15224461	COPRISEME SX	LEFT SEED COVER	COUVRE-GRAINES GCH.	SAMENABDECKER LINKS	CUBRESEMILLA IZQ.
3	G15224451	COPRISEME DX	RIGHT SEED COVER	COUVRE-GRAINES DRT.	SAMENABDECKER RECHTS	CUBRESEMILLA DER.
4	G15224431	SCORRIMOLLA				
5	G15224440	RONDELLA 6X28X2,5 ASOLATA	SLOT WASHER 6X28X2,5	RONDELLE A BOUTON.6X28X2,5	TSENSCHEIBE 6X28X2,5	ARANDELA DE OJETE 6X28X2,5
6	G18904220	MOLLA COPRISEME	SEED COVERING TINE	RESSORT COUVRE-GRAINES	SAMENABDECKFEDER	MUELLE CUBRESEMILLAS
7	G20980050	BOCCOLA 15X7X8,5 ZN	BUSHING 15X7X8-5 ZN	BOITE 15X7X8-5 ZN	BsCHSE 15X7X8-5 ZN	CASQUILLO 15X7X8-5 ZN
8	G20980022	BOCCOLA 18X10,25X7	BUSHING 18X10-25X7	BOITE 18X10-25X7	BsCHSE 18X10-25X7	CASQUILLO 18X10-25X7
9	F01420060	ROS.M10 10,5X 30X2,5 U6593 ZG	WASHER 10,5X30	RONDELLE 10,5X30	SCHEIBE 10,5X30	ARANDELA 10,5X30
10	F01020118	VITE M10X 1,5X60 U5737 8.8 ZG	BOLT 10X60 5737 8.G GALVANIZED	VIS 10X60 5737 8.G ZN	SCHRAUBE 10X60 5737 8.G ZN	TORNILLO 10X60 5737 8.G ZN
11	F01020077	VITE M 8X1,25X60 U5737 8.8 ZG	BOLT M 8X55	VIS M 8X55	SCHRAUBE M 8X55	TORNILLO M 8X55
12	F01410051	ROS.M8 8,4X 17X1,6 U6592 ZG	PLANE WASHER D.8	RONDELLE D.8	SCHEIBE D.8	ARANDELA D.8
13	F01230034	DADO M 8X1,25 D982 8	SELF LOCKING NUT M8X1,25	ECROU AUTOBL. M8X1,25	SELBSTSP.MUTT. M8X1,25	DADO AUTOBL. M8X1,25
14	F01020470	VITE M10X 1,5X20 U5739 8.8 ZG	BOLT M 10X20	VIS M 10X20	SCHRAUBE M 10X20	TORNILLO M 10X20
15	F01220033	DADO M10X 1,5 D980 8 ZG	NUT M10X 1,5 D980 8 ZB	ECRO.M10X 1,5 D980 8 ZB	MUTT.M10X 1,5 D980 8 ZB	TUER.M10X 1,5 D980 8 ZB
16	G15223920	FERMO MOLLA SX	LEFT SPRING STOP	ARRET RESSORT GCH.	FESTSTELLVORRICHTUNG FEDER LI.	BLOQUEO MUELLE IZQ.
17	G20980081	BOCCOLA 25X12X16,25	BUSHING 25X12X16-25	BOITE 25X12X16-25	BsCHSE 25X12X16-25	CASQUILLO 25X12X16-25
18	F01020436	VITE 8 X20 5739 8.G ZN	BOLT M 8X20	VIS M 8X20	SCHRAUBE M 8X20	TORNILLO M 8X20
19	G15223900	PERNO AGGANCIO MOLLA	SPRING HOOK PIN	PIVOT FIXATION RESSORT	ZAPFEN FEDERKUPPLUNG	PERNO ENGANCHE MUELLE
20	G18902920	MOLLA COPRISEME SX SP	LEFT SEED COVER SPRING SP	RESSORT COUVRE-GRAINE GCH SP	FEDER SAMENABDECKER LI SP	MUELLE CUBRESEMILLAS IZQ SP
21	F01420048	ROND.PIANA 9X 24X2 6593 ZN	PLANE WASHER D.8	RONDELLE D.8	SCHEIBE D.8	ARANDELA D.8
22	F01020072	VITE M 8X1,25X50 U5737 8.8 ZG	BOLT M 8X1,25X50 U5737 8.8 ZG	VIS M 8X1,25X50 U5737 8.8 ZG	SCHRAUBE M 8X1,25X50 U5737 8.8	TORNILLO M 8X1,25X50 U5737 8.8
23	G22220059	COPRISEME SINISTRO	LEFT CORN SEED COVER	COUVRE-GRAINES GCH.	SAMENABDECKER LINKS	CUBRESEMILLA IZQUIERDO
24	F06220012	VOLANTINO 4 LOBI M12X100	HANDWHEEL M12X100	VOLANT M12X100	HANDRAD M12X100	VOLANTE M12X100
25	G22220060	COPRISEME DESTRO	RIGHT SEED COVER	COUVRE-GRAINES DRT.	SAMENABDECKER RECHTS	CUBRESEMILLA DERECHO
26	F01220022	DADO M 8X1,25 D980 8 ZG	SELF LOCKING NUT M8X1,25 980V	ECROU AUTOBL. M8X1,25 980-V	SELBSTSP.MUTT. M8X1,25 980-V	DADO AUTOBL. M8X1,25 980-V
27	G15223910	FERMO MOLLA DX	RIGHT SPRING STOP	ARRET RESSORT DRT.	FESTSTELLVORRICHTUNG FEDER RE.	BLOQUEO MUELLE DER.
28	G18902660	MOLLA SPEC.ZN FERMO SV MINI	SPEC. GALV. SPRING STOP SV MIN	RESSORT SPEC. ZN ARRET SV MINI	SPEZ.FEDER ZN FESTSTELL-VOR. S	MUELLE ESPEC.ZN BLOQUEO SV MIN
29	G18902910	MOLLA COPRISEME DX SP	RIGHT SEED COVER SPRING SP	RESSORT COUVRE-GRAINE DRT SP	FEDER SAMENABDECKER RE SP	MUELLE CUBRESEMILLAS DER SP
30	F02100087	SPINA E.P. 5X 30 U6873 C70 BR	PIN EL. 5 X30 DIN 1481	FICHE EL. 5 X30 DIN 1481	SPANNSTIFT 5 X30 DIN 1481	CLAVIJA EL.5 X30 DIN 1481
31	F02200363	COPIGLIA R 3X 62 ZG	SPLIT PIN R 3X62	GOUPILLE R 3X62	SPLINT R 3X62	CHAVETA R 3X62

TAV. 160

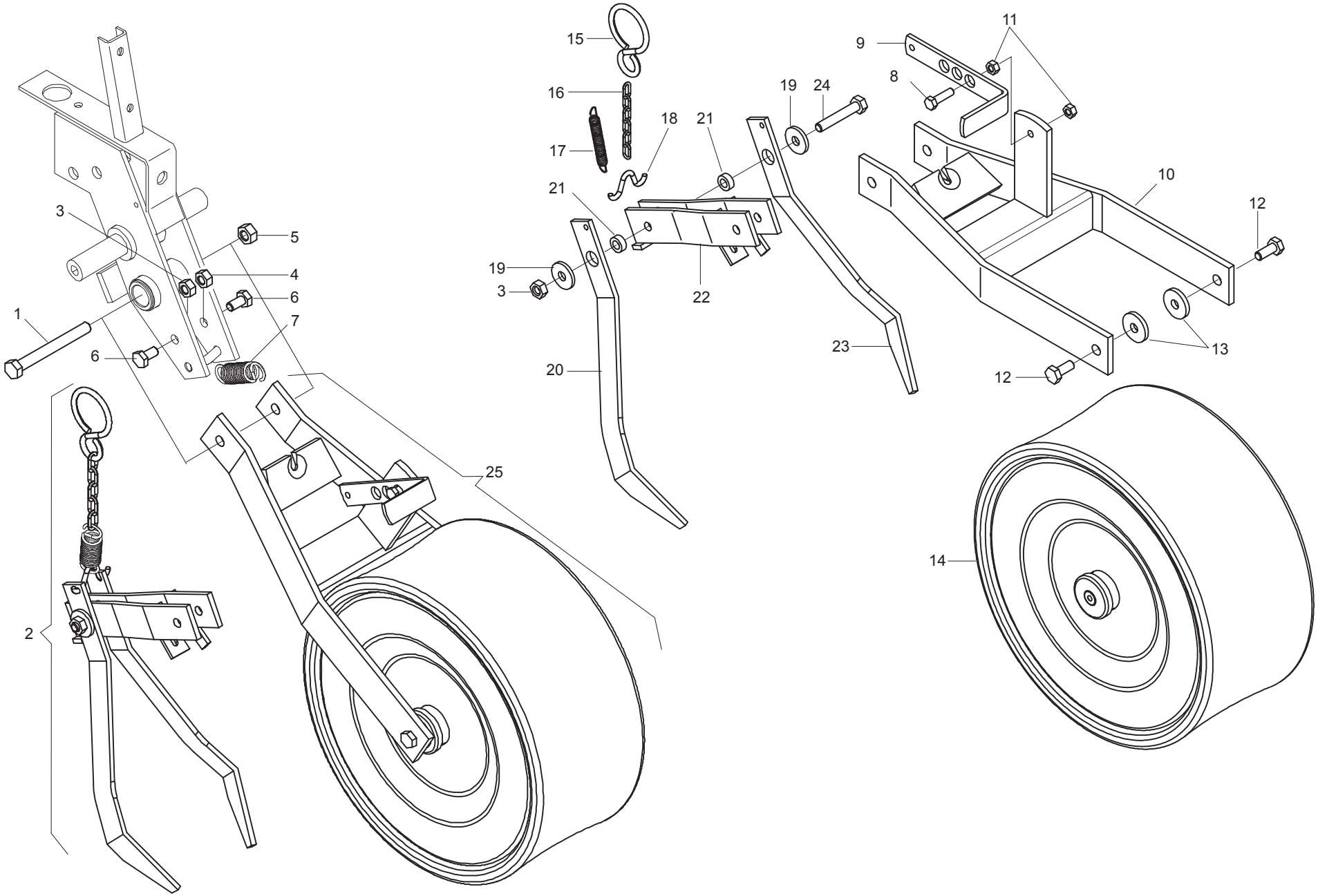

GASPARDO

RUOTA COMPRESSIONE FARMFLEX Ø370 (CON COPRISEME ANTERIORE) "MT"

TAV. 160

Pos.	Cod.	Descrizione	Description	Description	Benennung	Descripcion
1	F01020172	VITE M12X1,75X110 5737 8.8 ZG	BOLT 12X110 5737 8.G GALVANIZ.	VIS 12X110 5737 8.G ZN	SCHRAUBE 12X110 5737 8.G ZN	TORNILLO 12X110 5737 8.G ZN
2	G15224290	MONT.SUPPORTO COPRISEME	SEED COVERING WHEEL SUPPORT PO	MONT.SUPPORT RECOUVRE-GRAINES	MONT.ZUSTREIFERHALTERUNG	MONT.SOPORTE CUBRESEMILLA
3	F01200270	DADO 10 5588 6.8 ZN	NUT M10	ECROU M10	MUTTER M10	DADO M10
4	F01220033	DADO M10X 1,5 D980 8 ZG	NUT M10X 1,5 D980 8 ZB	ECRO.M10X 1,5 D980 8 ZB	MUTT.M10X 1,5 D980 8 ZB	TUER.M10X 1,5 D980 8 ZB
5	F01220048	DADO M12X1,75 D980 8 ZG	SELF LOCKING NUT M12X1,75 980V	ECROU AUTOBL. M12X1,75 980-V	SIEHE 00553312	DADO AUTOBL. M12X1,75 980-V
6	F01020470	VITE M10X 1,5X20 U5739 8.8 ZG	BOLT M 10X20	VIS M 10X20	SCHRAUBE M 10X20	TORNILLO M 10X20
7	G18902670	MOLLA TRAZ.ZN PRESS.SV-MINI	GALV. PRESS. SV-MINI TRACT.SPR	RESSORT TRACT.ZN PRESS.SV-MINI	ZUGFEDER ZN DRUCK SV - MINI	MUELLE TRACC.ZN PRES.SV-MINI
8	F01020445	VITE 8 X30 5739 8.G ZN	BOLT M 8X30	VIS M 8X30	SCHRAUBE M 8X30	TORNILLO M 8X30
9	G15224240	STAFFA REGOLAZ.MOLLA	SPRING ADJUSTMENT BRACKET	BRIDE REGLAGE RESSORT	BsGEL FEDEREINSTELLUNG	ESTRIBO REGULAC.MUELLE
10	G15224230	SUPPORTO RUOTA FARMFLEX	WHEEL SUPPORT FARMFLEX	SUPPORT ROUE FARMFLEX	RADHALTERUNG FARMFLEX	SOPORTE RUEDA FARMFLEX
11	F01200244	DADO M 8X1,25 U5588 6.8 ZG	NUT M8	ECROU M8	MUTTER M8	DADO M8
12	F01020472	VITE M10X 1,5X25 U5739 8.8 ZG	BOLT 10X25 5739 8.G GALVANIZED	VIS 10X25 5739 8.G ZN	SCHRAUBE 10X25 5739 8.G ZN	TORNILLO 10X25 5739 8.G ZN
13	G18701140	RONDELLA 11 X35 X5	WASHER 11 X 35 X 5	RONDELLE 11 X35 X5	UNTERLEGSCHEIBE 11 X35 X5	ARANDELA 11 X35 X5
14	G14821590	RUOTA FARMFLEX 370X165 PROF.A	FARMFLEX WHEEL 370X165 DEPTH.A	ROUE FARMFLEX 370X165 PROF.A	RAD FARMFLEX 370X165PROF.A	RUEDA FARMFLEX
15	G65336004	MOLLA SPEC.ZN AGG.SEMINAT. SP	SPEC SPRING- ZN ADD. SEEDER SP	RESSORT SPEC. ZN ATTELAGE SEME	SPEZIALFEDER ZN SZELEM. KUPPL.	MUELLE ESPEC. ZN CONEX. SEMBRA
16	G15224260	CATENA L.122	CHAIN L.122	CHAINE L.122	KETTE L.122	CADENA L.122
17	G65337005	MOLLA TRAZ.CAMBIO SV	TRACTION COUPLING SPRING- GEAR	RESSORT TRACT.BOITE DE VITESSE	ZUGFEDER GETRIEBE SV	MUELLE TRAC. CAMBIO SV
18	G15224250	FERMO MOLLA	SPRING STOP	ARRET RESSORT	FESTSTELLVORRICHTUNG FEDER	BLOQUEO MUELLE
19	G20970012	RONDELLA 32X4X11	WASHER 32X4X11	RONDELLE 32X4X11	UNTERLEGSCHEIBE 32X4X11	ARANDELA 32X4X11
20	G15224280	COPRISEME SX	LEFT CORN SEED COVER	COUVRE-GRAINES GCH.	SAMENABDECKER LINKS	CUBRESEMILLA IZQUIERDO
21	G20980022	BOCCOLA 18X10,25X7	BUSHING 18X10-25X7	BOITE 18X10-25X7	BsCHSE 18X10-25X7	CASQUILLO 18X10-25X7
22	G15224180	SUPPORTO COPRISEME	SEED COVER SUPPORT	SUPPORT COUVRE-GRAINES	SAMENABDECKERHALTERUNG	SOPORTE CUBRESEMILLAS
23	G15224270	COPRISEME DX	RIGHT SEED COVER	COUVRE-GRAINES DRT.	SAMENABDECKER RECHTS	CUBRESEMILLA DERECHO
24	F01020118	VITE M10X 1,5X60 U5737 8.8 ZG	BOLT 10X60 5737 8.G GALVANIZED	VIS 10X60 5737 8.G ZN	SCHRAUBE 10X60 5737 8.G ZN	TORNILLO 10X60 5737 8.G ZN
25	G15224300	RUOTA FARMFLEX COMPL	WHEEL- FARMFLEX	ROUE FARMFLEX COMPL.	RAD FARMFLEX KOMPL.	RUEDA FARMFLEX COMPL.

TAV. 171

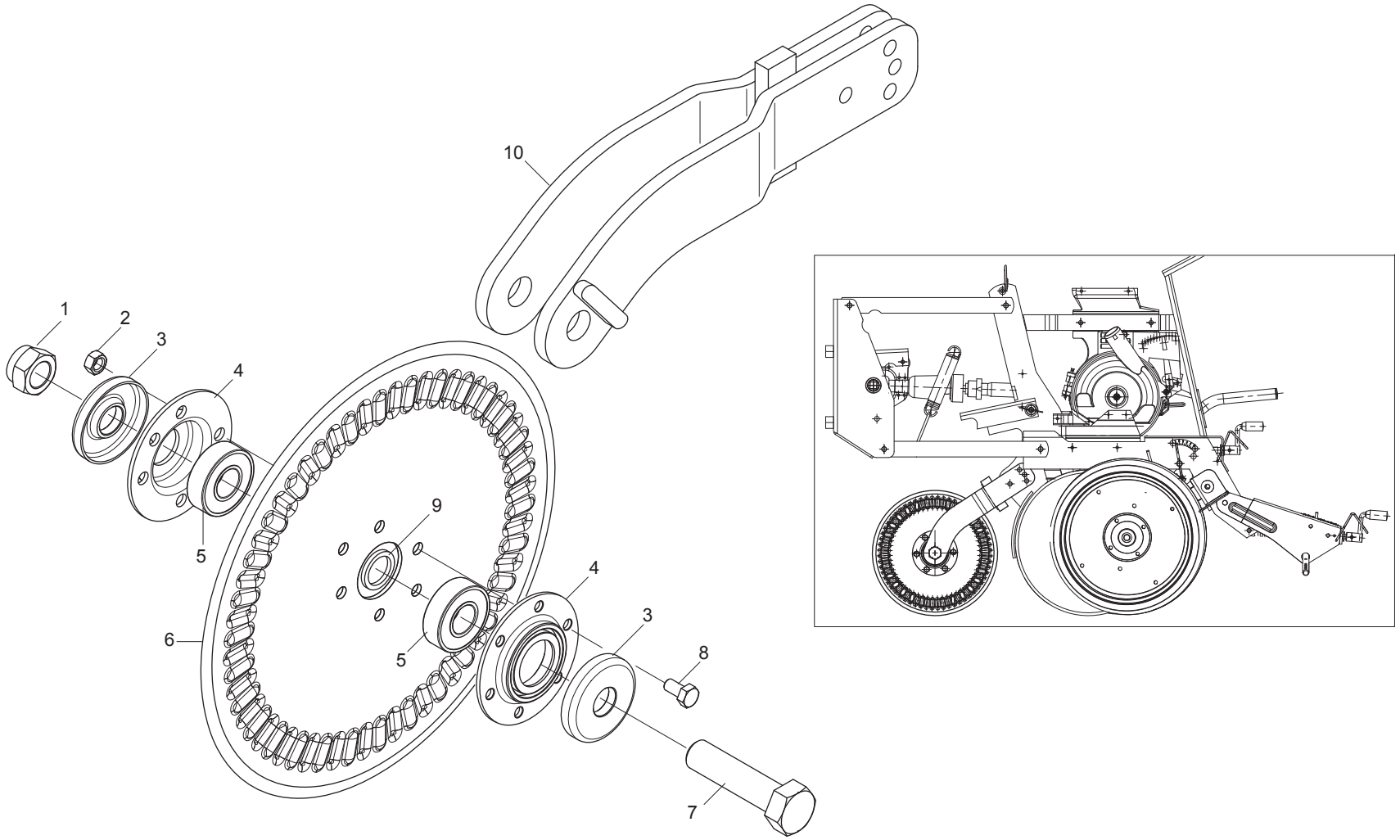

GASPARDO

COLTRO A DISCO STRIATO "MT"

TAV. 171

Pos.	Cod.	Descrizione	Description	Description	Benennung	Descripcion
1	F01230131	DADO M20X 2,5 D982 6 ZN	NUT M20X 2,5 D982 6 ZB	ECRO.M20X 2,5 D982 6 ZB	MUTT.M20X 2,5 D982 6 ZB	TUER.M20X 2,5 D982 6 ZB
2	F01220022	DADO M 8X1,25 D980 8 ZN	SELF LOCKING NUT M8X1,25 980V	ECROU AUTOBL. M8X1,25 980-V	SELBSTSP.MUTT. M8X1,25 980-V	DADO AUTOBL. M8X1,25 980-V
3	G16610430	FONDELLO ZN.				
4	G15226210	FLANGIA SUPP.CUSCINETTO	BEARING SUPP. FLANGE	BRIDE SUPPORT PALIER	FLANSCH LAGERHALTERUNG	BRIDA SOPORTE COJINETE
5	F04010156	CUSC.d20 D47 B14 6204 2RSH				
6	G15226041	DISCO STRIATO D.320	DISK D.320	DISQUE D.320	SCHEIBE D.320	DISCO D.320
7	F01020325	VITE M20X2,5X 90 U5737 10.9 ZD	BOLT 20X90 5737 10.9G GALVANI	VIS 20X90 5737 10.9G ZN	SCHRAUBE 20X90 5737 10.9G ZN	TORNILLO 20X90 5737 10.9G ZN
8	F01020436	VITE M 8X1,25X 20 U5739 8.8 ZN	BOLT M 8X20	VIS M 8X20	SCHRAUBE M 8X20	TORNILLO M 8X20
9	G20970100	RONDELLA 30X0,5X22 ACC.	WASHER 30X0-5X22 ACC.	RONDELLE 30X0-5X22 ACIER	UNTERLEGSCHEIBE 30X0-5X22 ACC.	ARANDELA 30X0-5X22 ACC.
10	G15226012	SUPPORTO DISCO STRIATO				
11	G15226220	KIT COLTRO DISCO STRIATO 6F.	DISC COULTER KIT	KIT COUTRE DISQUE	KOLTERSCHEIBEKIT	KIT CUCHILLA DE ARADO DISCO

TAV. 181

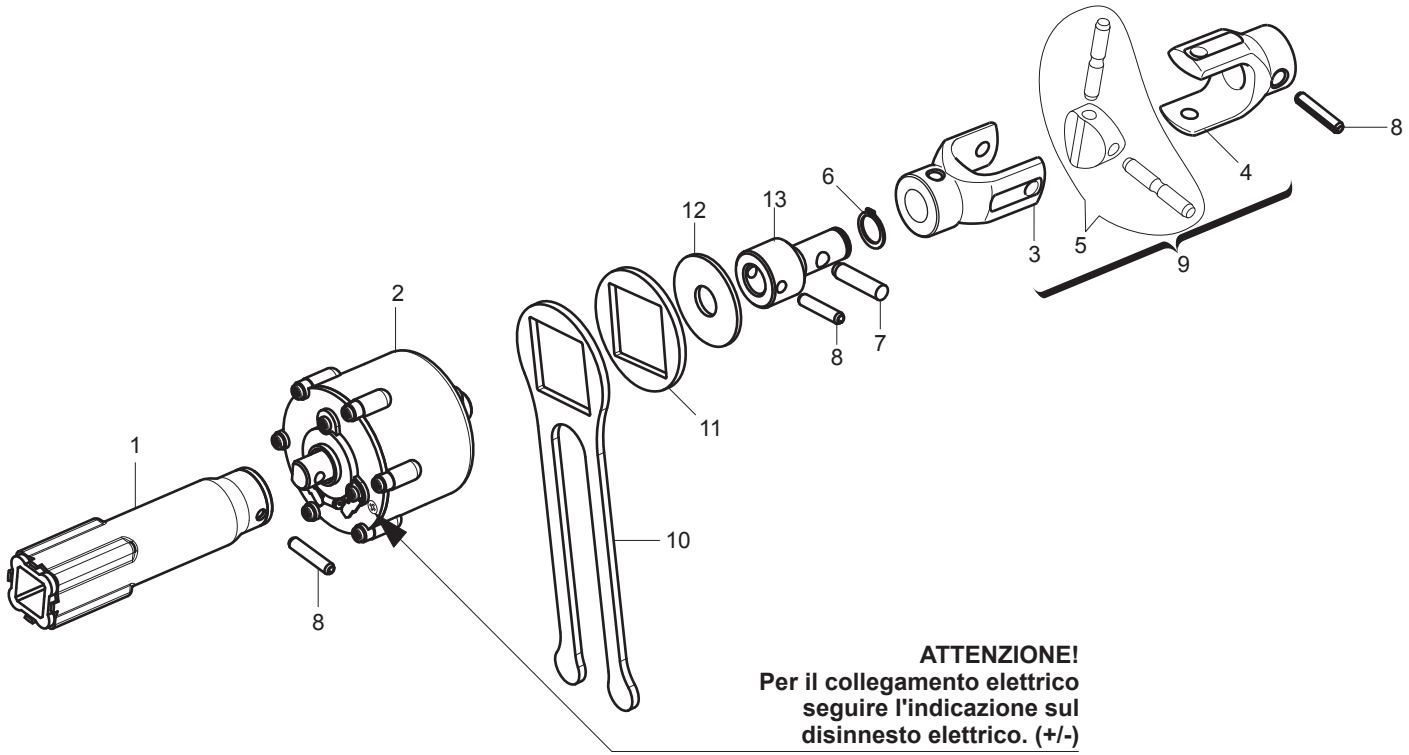

GASPARDO

ESCLUSIONE ELETTRICA FILE DI SEMINA "MT"

TAV. 181

Pos.	Cod.	Descrizione	Description	Description	Benennung	Descripcion
1	G15225323	INNESTO ESCL.ELETTR.MT				
2	G16033701	DISINNESTO ELETTRICO 180 COMPL	COMPL. ELECTRIC RELEASE 180	D+BRAYAGE +LECTRIQUE 180 COMPL	ELEKTRISCHE ENTKUPPLUNG 180 KO	DESCONEXIËN EL+CTRICA 180 COMP
3	G19204080	FORCELLA				
4	G19204090	FORCELLA				
5	G22270454	CROCIERA COMPL. SP/S	SPIDER SP/S	CROSILLON COMPL CARDAN TRANSM	GELENKKREUZ KOMPL. SP/S	CRUCETA COMPL. SP/S
6	F02050045	ANELLO E. DE 16X 1 U7435 C70	SEEGER RING 16X 1 U7435 C70	BAGUE SEEGER 16 X 1 U7435 C70	SEEGERING 16 X 1 U7435 C70	ANILLO 16X 1 U7435 C70
7	G66248057	SPINA DI SICUREZZA SP	SAFETY PIN SP	BROCHE PLASTIC SECURITE CARDAN	SICHERHEITSSTIFT SP	CLAVIJA DE SEGURIDAD SP
8	F02100114	SPINA E.P. 6X 30 U6873 C70 BR	ELASTIC PIN 6X30	GOUJON ELASTIQUE 6X30	SPANNHUELSE 6X30	ESPINA ELASTICA 6X30
9	G15423980	FORCELLE SNODO ESCL.ELET.COMPL	FORK ELECTRIC DISABLE COMPLET	FOURCHETTE EXCL. +LECTR. COMPL	STAFEL ELEKT.AUSSCHALTU KOMPL.	HORQUILLA DESC.EL+CTRICA COMPL
10	G16033750	FERMO DISINNESTO ELETTRICO ZN	UNCOUPLING ELECTRIC STOP	ARRET DEBRAYAGE +LECT.	FESTSTELL. AUSKUPPLUNG EL.	BLOQUEO DESCONEXIN EL.
11	G16033740	DISTANZIALE DISINNESTO ELET.ZN	UNCOUPLING ELECTRIC SPACER	ENTRETOISE DEBRAYAGE +LECT.	DISTANZST_CK AUSKUPPLUNG EL.	DISTANCIADOR DESCONEXIN EL.
12	G18701970	RONDELLA 16X48X2,5	WASHER 16X48X2,5	RONDELLE 16X48X2,5	UNTERLEGSCHEIBE 16X48X2,5	ARANDELA 16X48X2,5
13	G16033730	ADATTATORE CROCIERA	SPIDER ADAPTOR	ADAPTATEUR CROISIERE	PASSST_CK GELENKKREUZ	ADAPTADOR CRUCETA

TAV. 200

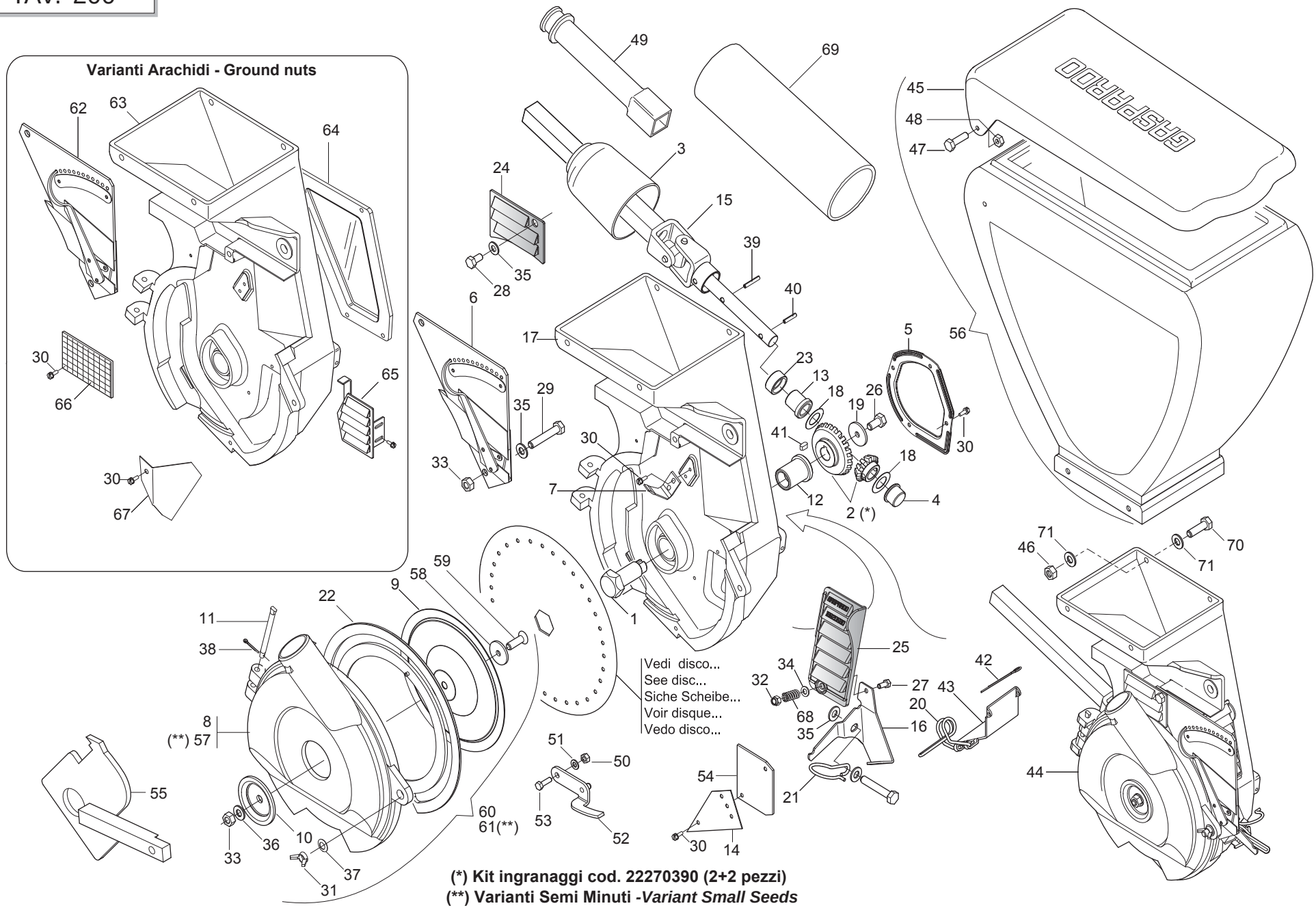

(*) Kit ingranaggi cod. 22270390 (2+2 pezzi)
(**) Varianti Semi Minuti -*Variant Small Seeds*

DISTRIBUTORE SEMI "SP"

TAV. 200

Pos.	Cod.	Descrizione	Description	Description	Benennung	Descripcion
1	G22230046	ASSE TRASMISSIONE DISCO	DISK GEAR AXLE	AXE ENTRAINEMENT DISQUE	ACHSE SCHEIBENANTRIEB	EJE TRANSMISIN DISCO A
2	G22270390	KIT COPPIA CONICA DISTRIB.SEMI	KIT- SEED DISTR. CONICAL PAIR	COUPLE CON DISTR GRAINES (2+2)	KIT KEGELTRIEB SAMEN SZAPPARAT	SET PAR CONICO DISTRIB. SEMILL
3	G66248094	COPRICARDANO SP	UNIVERSAL JOINT COVER SP	COUVRE-CARDAN SP	KARDANABDECKUNG SP	CUBRECARDæN SP
4	G66349008	BOCCOLA	BUSHING	BOITE	BsCHSE	CASQUILLO
5	G22230035	COPERCHIO SCATOLA INGRAN.	GEARWHEEL BOX COVER	COUVERCLE BOITE ENGRENAGE	DECKEL ZAHNRZDERGEHZUSE	TAPA CAJA ENGRAN.
6	G22230040	SELETTORE MOBILE COMPLETO	MOBILE SELECTOR ASSY.	SELECTEUR MOBILE COMPL.	KOMPL. BEWEGLICHER WZHLER	SELECTOR MVIL COMPLETO S
7	G22230041	SELETTORE FISSO	SELECTOR FIXED	SELECTEUR FIXE	FESTER WZHLER	SELECTOR FIJO
8	G22270205	COPERCHIO MAGG.DISTRIB.SEME	INCREASED SEED DISTRIB. COVER	COUVERC. MAJOR.DISTRIB. GRAINE	sBERBEM. DECKEL SAMENSZAPPARAT	TAPA SOBREDIMENS. DISTRIB. SEM
9	G22230037	TENUTA GUARNIZIONE	SEAL	BLOQUAGE GARNITURE	DICHTUNG	JUNTA ESTANCA
10	G16620470	TAPPO CENTRALE H=7,5	CENTRAL PLUG H=7.5	BOUCHON CENTRAL H=7,5	ZENTRALER PFROPFEN H=7,5	TAPËN CENTRAL H=7,5
11	G22230039	PERNO COPERCHIO	COVER PIN	PIVOT COUVERCLE	DECKELZAPFEN	PERNO TAPA
12	G66349002	BOCCOLA SINT.BASSOFONDO	BUSHING- SINTERED	BOITE FRITTEE	SYNTH. B_CHSE	CASQUILLO SINT.
13	G22270071	BOCCOLA COLL.SINTER.20X24	20X24 SINTERED COLLARED BUSH	BOITE COLLIER FRITTEE 20X24	ANSCHLUSSBUECHSE SINTER.20X24	CASQUILLO CONEX. SINTER.20X24
14	G22270204	PIASTRA ANTI TRABOCC.SEMI SP	SEED ANTI-OVERFLOW PLATE SP	PLAQUE ANTI-DEBORD.T GRAINES S	SAMENsBERLAUFPLATTE SP	PLACA ANTI DESBORDAMIENTO SEMI
15	G15421141	ASSE PORTA PIGNONE COMPL.	COMPL. PINION HOLDER SPINDLE	AXE PORTE PIGNON COMPL.	RITZELTRZGERACHSE KOMPLETT	EJE PORTAPI¾N COMPLETO A
16	G15421151	FERMO MOLLA FALCIONE	CUTTER SPRING STOP	ARRET RESSORT HACHOIR	FESTSTELLVOR. FEDER FUTTERSCHN	BLOQUEO MUELLE GUADA¾ADORA
17	G16620120	CORPO DI DISTRIBUZIONE SP540	DISTRIBUTION ASSEMBLY SP540	CORPS DE DISTRIBUTION SP540	STREUBEH-LTER SP540	CUERPO DISTRIBUCIËN SP540
18	G22220073	RONDELLA 28X0,3X16,5	WASHER 28X0-3X16-5	RONDELLE 28X0-3X16-5	UNTERLEGSCHEIBE 28X0-3X16-5	ARANDELA 28X0-3X16-5
19	F01420037	ROS.M6 6,4X 24X 2 U6593 ZG	WASHER 6,6X24X2 6593 ZN	RONDELLE 6,6X24X2 6593 ZN	UNTERLEGSCHEIBE 6,6X24X2 6593	ARANDELA 6,6X24X2 6593 ZN
20	G18902951	MOLLA SPEC.ZN SCARICO	SPEC SPRING ZN DISCHARGE	RESSORT TRAPPE VIDANGE	SPEZIALFEDER ZN ENTLADUNG	MUELLE ESPEC. ZN DESCARGA
21	G18903180	MOLLA CONVOGLIATORE MICRO	MICRO CONVEYOR SPRING	RESSORT CONVOYEUR MICRO	FEDER MIKRO FTRDERER	MUELLE CONDUCTOR MICRO
22	G66248068	GUARNIZIONE COPERCH.DISTR. SP	DISTRIB. COVER GASKET. SP	JOINT ETANCH PORTE SP520/540	DICHTUNG SZAPPARATDECKEL SP	JUNTA TAPA DISTR. SP
23	G66248219	ANELLO PARAPOLVERE SP-520	DUST COVER RING	BAGUE PARE-POUSSIERE SP-520	STAUBSCHUTZRING SP-520	ANILLO GUARDAPOLVO SP-520
24	G16620540	PORTA DI PROTEZIONE	SAFETY HATCH	PORTE DE PROTECTION	SCHUTZÍFFNUNG	PUERTA DE PROTECCIËN
25	G16620530	PORTA DI CONTROLLO	INSPECTION DOOR	PORTE CONTROLE	KONTROLLTsR	PUERTA DE CONTROL
26	F01020403	VITE 6 X16 5739 8.G ZN	BOLT M 6X16	VIS M 6X16	SCHRAUBE M 6X16	TORNILLO M 6X16
27	F01020382	VITE M 5X0,8X 25 U5739 8.8 ZG	BOLT 5 X25 5739 8.G GALVANIZ.	VIS 5 X25 5739 8.G ZN	SCHRAUBE 5 X25 5739 8.G ZN	TORNILLO 5 X25 5739 8.G ZN
28	F01020432	VITE 8 X16 5739 8.G ZN	BOLT M 8X16	VIS M 8X16	SCHRAUBE M 8X16	TORNILLO M 8X16
29	F01020451	VITE 8 X45 5739 8.G ZN	BOLT M 8X45	VIS M 8X45	SCHRAUBE M 8X45	TORNILLO M 8X45
30	F01070011	VIT.A.4,2X1,41X 9,5 6950 4.8NI	BOLT- SELF-TAPPING 4-2X9-5T.E.	VIS AUTOTAR. 4-2X9-5 T. E. COU	SELBSTSCHNEID. SCHRAUBE 4-2X9-	TORNILLO AUTORROSC. 4-2X9-5
31	F01240024	DADO M 8X1,25 U5448 5.8 ZG	NUT 8 UNI 5448 5.8 ZN	ECROU 8 UNI 5448 5.8 ZN	MUTTER 8 UNI 5448 5.8 ZN	TUERCA 8 UNI 5448 5.8 ZN
32	F01230019	DADO M 5X 0,8 D982 8 ZG	NORM.SELF-LOCKING NUT 5 GALVAN	ECROU AUTOB.NOR.5 ZN	SELBSTSP. MUTTER NOR.5 ZN	TUERCA AUTOB. NOR. 5 ZN
33	F01200244	DADO M 8X1,25 U5588 6.8 ZG	NUT M8	ECROU M8	MUTTER M8	DADO M8
34	F01410023	ROS.M5 5,3X 10X 1 U6592 ZG	WASHER D5 UNI 6592 ZN	RONDELLE D5 UNI 6592 ZN	UNTERLEGSCHEIBE D5 UNI 6592 ZN	ARANDELA D5 UNI 6592 ZN
35	F01410051	ROS.M8 8,4X 17X1,6 U6592 ZG	PLANE WASHER D.8	RONDELLE D.8	SCHEIBE D.8	ARANDELA D.8
36	F01430059	ROS.M8 8,4X 15X0,8 U8842J ZG	WASHER D8 DIN 6798 D.INT.ZN	RONDELLE D8 DIN 6798 D. INT. Z	UNT. SCHEIBE D8 DIN 6798 D. IN	ARANDELA D8 DIN 6798 D.INT.ZN
37	F01460115	ROS.OND. 8,4X 15X0,5 BR D137A	WASHER D8 DIN 137/A	RONDELLE D8 DIN 137/A	UNTERLEGSCHEIBE D8 DIN 137/A	ARANDELA D8 DIN 137/A
38	F02200137	COPIGLIA 2X 15 U1336 ZG	SPLIT PIN 2 X15 1336 GALVAN.	GOUPILLE 2 X15 1336 ZN	SPLINT 2 X15 1336 ZN	PASADOR 2 X15 1336 ZN
39	F02100079	SPINA E.P. 5X 16 U6873 C70 BR	PIN EL. .5 X20 DIN 1481	FICHE EL. 5 X20 DIN 1481	SPANNSTIFT 5X20 DIN 1481	CLAVIJA EL.5 X20 DIN 1481
40	F02100083	SPINA E.P. 5X 24 U6873 C70 BR	PIN EL. 5 X24 DIN 1481	FICHE EL. 5 X24 DIN 1481	SPANNSTIFT 5 X24 DIN 1481	CLAVIJA EL.5 X24 DIN 1481
41	F02150012	LINGUETTA 5X 5X 10 U6604A	TAB 05X5X10 UNI6604	LANGUETTE 05X5X10 UNI6604	FEDERKEIL 05X5X10 UNI6604	LENGsETA 05X5X10 UNI6604
42	F02200200	COPIGLIA 4X 70 U1336 ZG	SPLIT PIN 4 X70 1336 GALVAN.	GOUPILLE 4 X70 1336 ZN	SPLINT 4 X70 1336 ZN	PASADOR 4 X70 1336 ZN
43	G15421870	PORTA DI SCARICO DISTRIBUTORE	DISTRIBUTOR DISCHARGE DOOR	PORTE DE DECHARGEMENT DISTRIB,	ENTLADUNGSTsR SZAPPARAT	PUERTA DESCARGA DISTRIBUIDOR
44	G16620101	CORPO DISTRIBUTORE COMPL.SP540	COMPL. DISTRIBUTOR BODY SP540	CORPS DISTRIBUTEUR COMPL.SP540	STREUERKÍRPER, KOMPL.SP540	CUERPO DISTRIBUIDOR COMPL.SP54
45	G19002750	COPERCHIO SERBATOIO SEME 530	SEED TANK COVER 530	COUVERCLE RES GRAINES 530-MT	SAMENBEHZLTERDECKEL 530	TAPA DEPSITO SEMILLA 530 A
46	F01220011	DADO M 6X 1 D980 8 ZG	SELF LOCKING NUT M6	ECROU AUTOBL. M6	SELBSTSPERR.MUTTER M6	DADO AUTOBL. M6
47	F01020403	VITE 6 X16 5739 8.G ZN	BOLT M 6X16	VIS M 6X16	SCHRAUBE M 6X16	TORNILLO M 6X16
48	F01200232	DADO M 6X 1 U5588 6.8 ZG	NUT 6 UNI 5588 6.8 GALVANIZED	ECROU 6 UNI 5588 6.8 ZN	MUTTER 6 UNI 5588 6.8 ZN	TUERCA 6 UNI 5588 6.8 ZN
49	G15421830	INNESTO	COUPLING	ACCOUPLEMENT	KUPPLUNG	ACOPLAMIENTO
50	F01200220	DADO M 5X 0,8 U5588 6.8 ZG	NUT 5 UNI 5588 6.8 GALVANIZED	ECROU 5 UNI 5588 6.8 ZN	MUTTER 5 UNI 5588 6.8 ZN	TUERCA 5 UNI 5588 6.8 ZN
51	F01430035	ROS.M5 5,3X 10X0,6 U8842J ZG	WASHER D5 DIN 6798 D.INT.ZN	RONDELLE D5 DIN 6798 D. INT. Z	UNT. SCHEIBE D5 DIN 6798 D. IN	ARANDELA D5 DIN 6798 D.INT.ZN
52	G16620010	ESPULSORE SEMI BIETOLA	SUGAR BEET EJECTOR	EXPULSEUR BETTES	AUSWERFER RÜBEN	EXPULSOR REMOLACHA
53	F01020381	VITE M5X 0,8X 20 U5739 A2 IX	BOLT 5X20 5739	VIS 5X20 5739	SCHRAUBE 5X20 5739	TORNILLO 5X20 5739
54	G22270133	PIASTRINA ANTI TRABOC.SEMI MIN	MINUTE SEED PLATE SP	PLAQUETTE GRAINES PETITES SP	PLZTTCHEN KLEINE SAMEN SP	PLAQUETA SEMILLAS PEQUE¾AS SP
55	G16620360	DIMA SELETTORE FISSO	POSITION PLATE FOR FIXED SELEC	GABARIT POSITION SELECTEUR FIX	EINSTELLEHRE F_R FIXEN ABSTREI	PLACA PARA LA POSICIËN SELECTO

TAV. 200

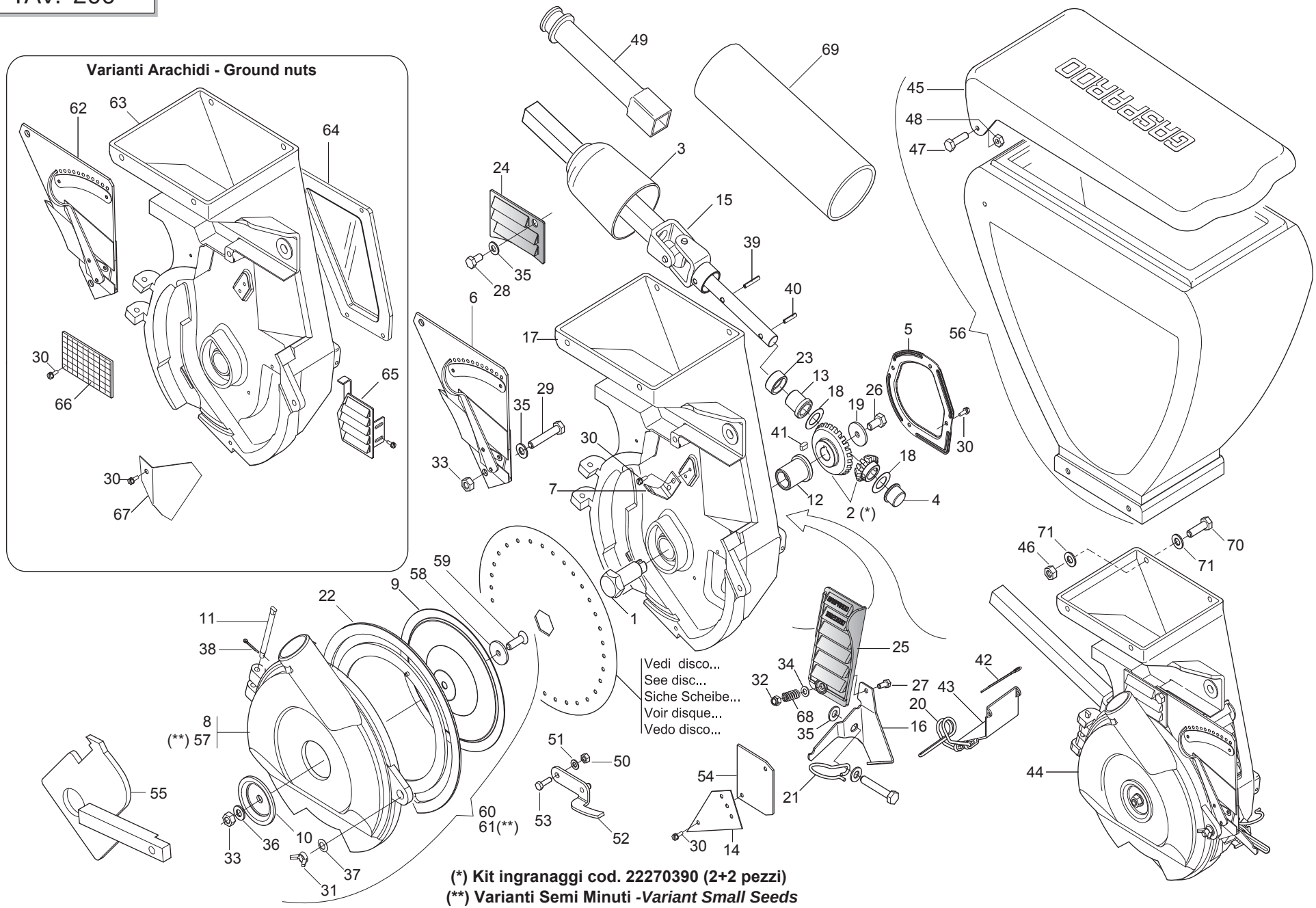

(*) Kit ingranaggi cod. 22270390 (2+2 pezzi)
(**) Varianti Semi Minuti -*Variant Small Seeds*

DISTRIBUTORE SEMI "SP"

TAV. 200

Pos.	Cod.	Descrizione	Description	Description	Benennung	Descripcion
56	G15422241	SERBATOIO SEME COMPLETO SP	SEED TANK ASSY.	RESERVOIR GRAINES COMP PLA SP	SAMENBEHZLTER KOMPLETT	DEPSITO SEMILLAS COMPLETO B
57	G16620450	COPERCHIO MAGGIORATO SEMI MIN.	INCREASED SEED DISTRIB. COVER	COUVERC. MAJOR.DISTRIB. GRAINE	_BERBEM. DECKEL SAMENSZAPPARAT	TAPA SOBREDIMENS. DISTRIB. SEM
58	G18701890	RONDELLA D.8,5 SVASATA ZN.	FLARED WASHER D.8.5 ZN.	RONDELLE D.8,5 +VAS+E ZN.	F-CHERSCHEIBE D.8,5 ZN.	ARANDELA Ï 8,5 ABOCINADA ZN.
59	F01030055	VITE M 8X1,25X20 U5933 8.8 ZG	BOLT M 8X20	VIS M 8X20	SCHRAUBE M 8X20	TORNILLO M 8X20
60	G13822440	COPERCHIO MAGGIOR.D45 COMPLETO	ASSY.INCREASED COVER	COUVERC. MAJOR.COMPL.	sBERBEM. DECKEL KOMPLETT	TAPA SOBREDIMENS. COMPLETO
61	G16620460	COPERCHIO SEMI MINUTI COMPL.	COMPL. MINUTE SEED COVER	COUVERCLE GRAINES PETITES COMP	DECKEL KLEINSAMEN KOMPL.	TAPA SEMILLAS PEQUEðAS COMPL
62	G22270128	SELETTORE MOBILE ARACHIDI SP	MOBILE SELECTOR- PEANUTS SP	SELECTEUR MOBILE ARACHIDES SP	BEWEGLICHER WZHLER ERDNsSSE SP	SELECTOR MVIL CACAHUETES. S
63	G15422520	CORPO DISTRIBUTORE ARACHIDI SP	PEANUT DISTRIBUTION CASING	CORPS DE DISTRIBUTION ARACHIDE	VERTEILUNGSKTRPER ERDNsSSE	CUERPO DE DISTRIBUC.CACAHUETES
64	G22270132	FINESTRELLA CONTR.ARACHIDI SP	PEANUT CONTRA. WINDOW SP	FENETRE CONTR. ARACHIDES SP	LUKE ERDNUSSKONTROLLE SP	VENTANILLA CONTR. CACAHUETES.
65	G22230033	PORTA CONTROLLO SEME	SEED INSPECTION DOOR	PORTE CONTROLE GRAINES	KONTROLLTsR SAMEN	PUERTA DE CONTROL SEMILLAS
66	G22270095	GRIGLIA PROTEZIONE SP	PROTECT. GRID SP	GRILLE PROTECTION SP	SCHUTZGITTER SP	REJILLA PROTECCIN SP G
67	G22270130	PIASTRINA ANTI TRABOC.ARACHIDI	PEANUT CLOSING PLATE	PLAQUETTE FERMETURE ARACH. SP	ABSCHLUSSPLZTTCHEN ERDNsSSE SP	PLAQUETA CIERRE CACAHUETES SP
68	G18904240	MOLLA APERTURA PORTA CONTROLLO	SPRING	RESSORT	FEDER	MUELLE
69	G19005100	TUBO D.63X3X280 NERO	PIPE D.63X3X280	TUBE D.63X3X280	ROHR D.63X3X280	TUBO D.63X3X280
70	F01020404	VITE M 6X 1X20 U5739 8.8 ZG	BOLT 6X20 5739 8.G GALVANIZED	VIS 6X20 5739 8.G ZN	SCHRAUBE 6X20 5739 8.G ZN	TORNILLO 6X20 5739 8.G ZN
71	F01420036	ROS.M6 6,4X 18X 2 U6593 ZG	FLAT WASHER 6-6X 18X2 6593 ZN	ROND. PLATE 6-6X 18X2 6593 ZN	SCHEIBE 6-6X 18X2 6593 ZN	ARAND. PLANA 6-6X 18X2 6593 ZN
72	G16620061	CORPO DISTRIBUZIONE BIETOLE	BEET DISTRIBUTION ASSEMBLY	CORPS DISTRIBUTION BETTERAVES	STREUBEH-LTER R_BEN	CUERPO DISTRIBUCIËN REMOLACHAS

TAV. 192

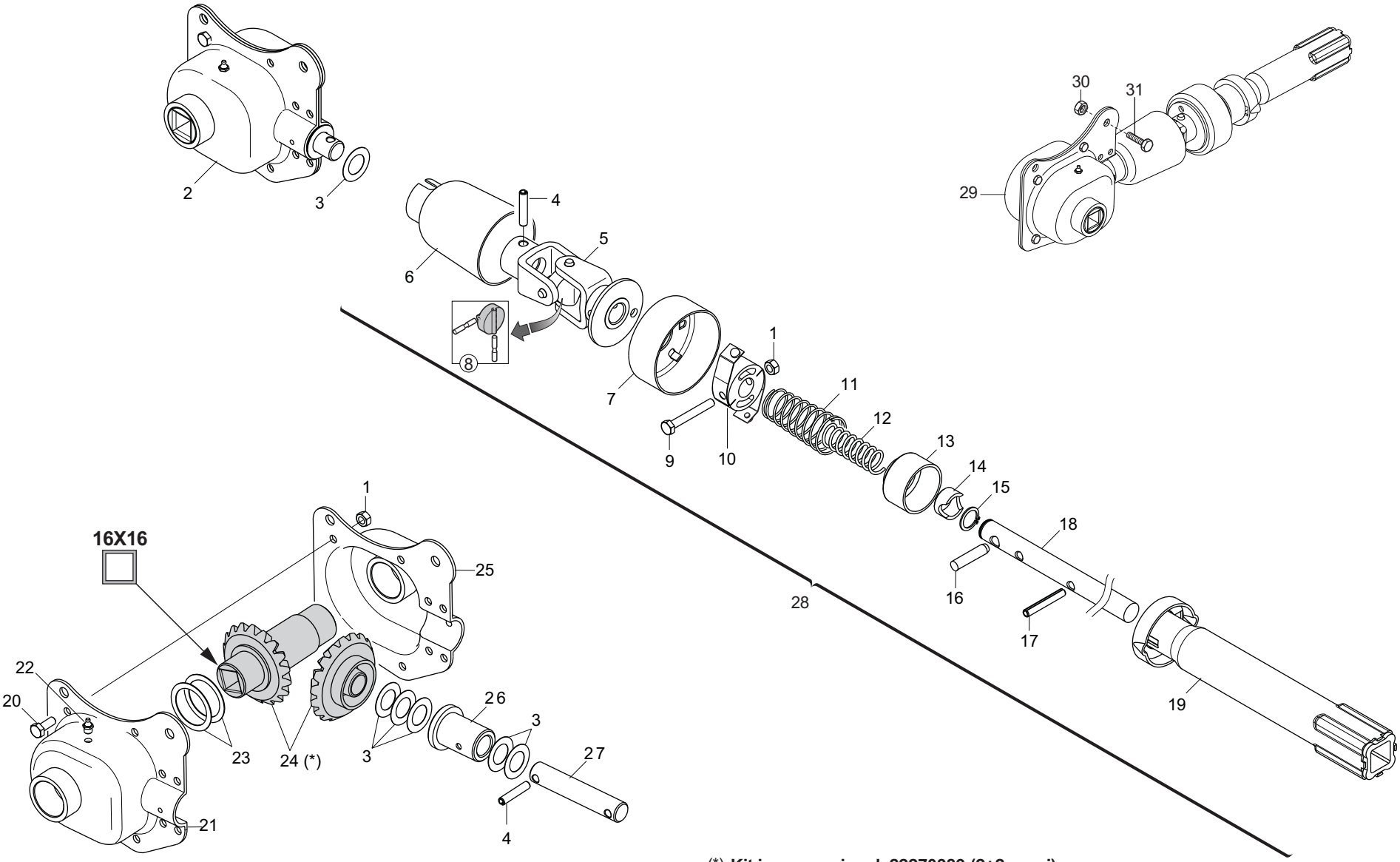

(*) **Kit ingranaggi cod. 22270389 (2+2 pezzi)**

SCATOLA DI RINVIO ELEMENTO “SP”

TAV. 192

Pos.	Cod.	Descrizione	Description	Description	Benennung	Descripcion
1	F01220011	DADO M 6X 1 D980 8 ZN	SELF LOCKING NUT M6	ECROU AUTOBL. M6	SELBSTSPERR.MUTTER M6	DADO AUTOBL. M6
2	G16033200	MONT.SCATOLA RINVIO Q.16 PLA >	TRANSFER CASE	BOITE RENVOI	VORGELEGEGEHZUSE	CAJA DE DISTRIBUCIN
3	G18700220	RONDELLA 16 X28 X0,3 ACC.				
4	F02100114	SPINA E.P. 6X 30 U6873 C70 BR	ELASTIC PIN 6X30	GOUJON ELASTIQUE 6X30	SPANNHUELSE 6X30	ESPINA ELASTICA 6X30
5	G22270453	SNODO AVVISATORE SP/S	SIGNALLER ARTICULATION SP/S	ARTICULATION SIGNALISATION SP/	HUPGELENK SP/S	ARTICULACIN AVISADOR SP/S A
6	G19002840	COPRICARDANO SUPERIORE	TOP CARDAN JOINT COVER	COUVRE-CARDAN SUPERIEUR	OBERE KARDANABDECKUNG	CUBRECARDæN SUPERIOR
7	G22220071	AVVISATORE ACUSTICO	HOOTER	SIGNALISATION ACOUSTIQUE	HUPE	INDICADOR ACSTICO A
8	G22270454	CROCIERA COMPL. SP/S	SPIDER SP/S	CROSILLON COMPL CARDAN TRANSM	GELENKKREUZ KOMPL. SP/S	CRUCETA COMPL. SP/S
9	F01020041	VITE M 6X 1X 45 U5737 8.8 ZN	BOLT 6 X45 5737 8.G GALVANIZED	VIS 6 X45 5737 8.G ZN	SCHRAUBE 6 X45 5737 8.G ZN	TORNILLO 6 X45 5737 8.G ZN
10	G22220155	ELEM.TENUTA MOLLE COMP.	SPRING SEAL ELEMENT ASSY.	ELEMENT D'ETANCHEITE RESSORTS	DICHTUNGSELEMENT FEDERN KOMP.	ELEM. RESISTENCIA MUELLES COMP
11	G65338039	MOLLA COMP.ZN INNESTO SP	ZN COUPLING COMP. SPRING SP	RESSORT COMPL. ZN ACCOUPLEM.	DRUCKFEDER ZN KUPPLUNG SP	MUELLE COMP.ZN ACOPLAMIENTO SP
12	G65338018	MOLLA COMP.ZN SCATOLA RINV.SP	TRANSM. BOX COMP. SPRING . SP	RESSORT COMPL. ZN TRANSMISSION	DRUCKFEDER ZN VORGELEGEGEHZUSE	MUELLE COMP.ZN CAJA TRANSFER..
13	G66248102	ANELLO SICUREZZA SP	SAFETY RING	BAGUE SECURITE SP	SICHERHEITSRING SP	ANILLO DE SEGURIDAD SP
14	G22220105	BOCCOLA DI SPINTA	THRUST BUSHING	BOITE DE POUSSEE	SCHUBBsCHSE	CASQUILLO DE APRIETE
15	F02050045	ANELLO E. DE 16X 1 U7435 C70	SEEGER RING 16X 1 U7435 C70	BAGUE SEEGER 16 X 1 U7435 C70	SEEGERING 16 X 1 U7435 C70	ANILLO 16X 1 U7435 C70
16	G66248057	SPINA DI SICUREZZA SP	SAFETY PIN SP	BROCHE PLASTIC SECURITE CARDAN	SICHERHEITSSTIFT SP	CLAVIJA DE SEGURIDAD SP
17	F02100121	SPINA E.P. 6X 40 U6873 C70 BR	ELASTIC PIN 6X40	GOUJON ELASTIQUE 6X40	SPANNHUELSE 6X40	PASADOR 6X40
18	G15421850	ASSE AVVISATORE	WARNING SPINDLE	AXE AVERTISSEUR	ACHSE SIGNALHUPE	EJE INDICADOR
19	G15421830	INNESTO	COUPLING	ACCOUPLEMENT	KUPPLUNG	ACOPLAMIENTO
20	F01020403	VITE M 6X 1X 16 U5739 8.8 ZN	BOLT M 6X16	VIS M 6X16	SCHRAUBE M 6X16	TORNILLO M 6X16
21	G22220103	CONCHIGLIA SX	LEFT SHELL	COQUILLE GCH.	SCHALE LINKS	MOLDE IZQ.
22	F01100011	ING.M 6X1 7663-A 9SMNPB28 ZN	SPHERE NIPPLE M6X1/A	GRAISSEUR A BILLES M6X1/A	KUGELFETTBsCHSE M6X1/A	ENGRAS. DE ESFERAS M6X1/A
23	G18700510	RONDELLA 32 X40 X0,6 ZN				
24	G22270389	2+2 INGR.SCATOLA DI RINVIO >	2+2 INTERM. TRANSM. GEAR BOX	COUPLE CON RENV ANGLE (2+2)	2+2 ZAHNRZDER VORGELEGEGEHZUSE	2+2 ENGRANAJES CAJA DE LA TRAN
25	G22220102	CONCHIGLIA DX	RIGHT SHELL	COQUILLE DRT.	SCHALE RECHTS	MOLDE DER.
26	G17120550	MONT.BOCC.SINTERIZ.18X26L42 >				
27	G22270452	ALBERO SCATOLA RINVIO SP/S	INTERMEDIATE BOX SHAFT	ARBRE TRANSMISSION SP/S	WELLE VORGELEGEGEHZUSE SP/S	æRBOL CAJA DE TRANSMISIN SP/SA
28	G16620620	ASSE AVVISATORE SP COMPL.	COMPL. HORN SHAFT SP	AXE AVERTISSEUR SP COMPL.	ACHSE SIGNALHUPE SP KOMPL.	EJE AVISADOR SP COMPL.
29	G16621060	MONT.SCATOLA RINVIO Q.16 EL.SP				
30	F01220222	DADO TRISTOP M 8	NUT- TRISTOP M 8	ECROU TRISTOP M 8	MUTTER TRISTOP M 8	TUERCA TRISTOP M 8
31	F01020440	VITE M 8X1,25X25 U5739 8.8 ZN	BOLT M8 X25 5739 8.8 ZN	VIS M8 X25 5739 8.8 ZN	SCHRAUBE M8 X25 5739 8.8 ZN	TORNILLO M8 X25 5739 8.8 ZN

TAV. 212

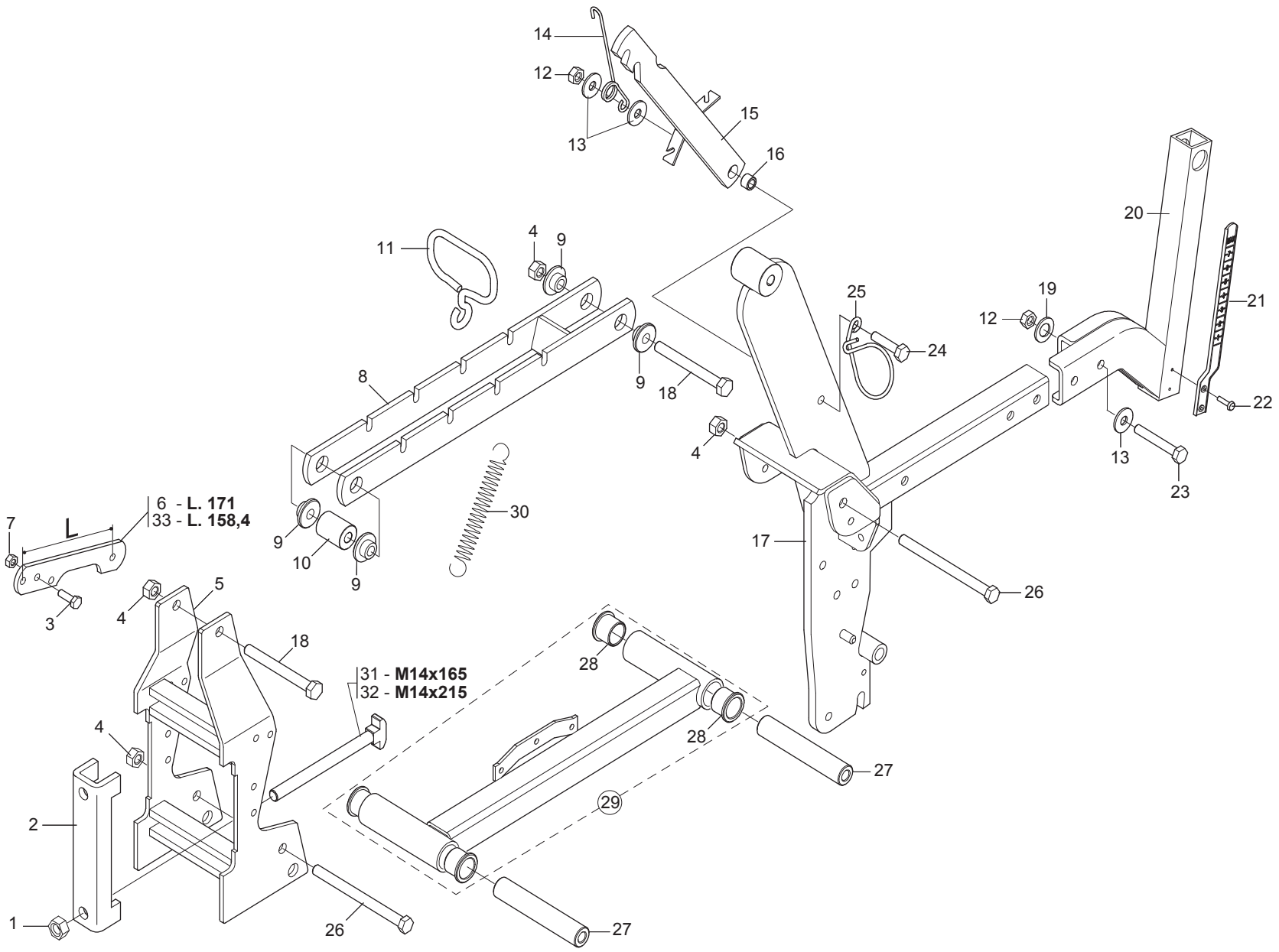

GASPARDO

TELAIO ELEMENTO "SP"

TAV. 212

Pos.	Cod.	Descrizione	Description	Description	Benennung	Descripcion
1	F01200306	DADO M14X 2 U5588 6.8 ZN	NUT M14X2	ECROU M14X2	MUTTER M14X2	DADO M14X2
2	G15110091	SCONTRO A U	STRIKER	BRIDE 150 MM	ANSCHLAG	ELEMENTO DE EMPALME
3	F01020440	VITE M 8X1,25X25 U5739 8.8 ZN	BOLT M8 X25 5739 8.8 ZN	VIS M8 X25 5739 8.8 ZN	SCHRAUBE M8 X25 5739 8.8 ZN	TORNILLO M8 X25 5739 8.8 ZN
4	F01220048	DADO M12X1,75 D980 8 ZN	SELF LOCKING NUT M12X1,75 980V	ECROU AUTOBL. M12X1,75 980-V	SIEHE 00553312	DADO AUTOBL. M12X1,75 980-V
5	G15421111	PIASTRA ATTACCO 150	COUPLING PLATE 150	PLAQUE ATTELAGE 150	KUPPLUNGSPLATTE 150	PLACA CONEXIN 150 P
6	G16620130	SUPPORTO SCATOLA RINVIO	SUPPORT BOITE DE RENVOI	GEARBOX SUPPORT	HALTERUNG VORGELEGEGEH-USE	SOPORTE CAJA TRANSMISI-N
7	F01220022	DADO M 8X1,25 D980 8 ZN	SELF LOCKING NUT M8X1,25 980V	ECROU AUTOBL. M8X1,25 980-V	SELBSTSP.MUTT. M8X1,25 980-V	DADO AUTOBL. M8X1,25 980-V
8	G15420102	PARALLELO SUPERIORE	UPPER PARALLEL	PARALL. SUP.	PARALLELOGRAMM OBEN	PARALELO SUPERIOR
9	G15421232	BOCCOLA BRACCIO PARALLELO SP.8	ARM BUSHING PARALLEL SP.8	BOITE BRAS PARALLELE SP.8	BsCHSE ARM PARALLEL SP.8	CASQUILLO BRAZO PARALELO SP.8
10	G18802170	BOCCOLA 12,25X30X40 ZN	BUSHING 12,25X30X40 ZN	BOITE 12,25X30X40 ZN	BsCHSE 12,25X30X40 ZN	CASQUILLO 12,25X30X40 ZN
11	G18903690	ATTACCO MOLLA	SPRING COUPLING	FIXATION RESSORT	KUPPLUNG FEDER	CONEXIN MUELLE O
12	F01200270	DADO M10X 1,5 U5588 6.8 ZN	NUT M10	ECROU M10	MUTTER M10	DADO M10
13	F01420060	ROS.M10 10,5X 30X2,5 U6593 ZN	WASHER 10,5X30	RONDELLE 10,5X30	SCHEIBE 10,5X30	ARANDELA 10,5X30
14	G18902880	MOLLA FERMO PARALLELO SP	PARALLEL STOP SPRING SP	RESSORT ARRET PARALLELE SP	FEDER FESTSTELLVORRICHT. PARAL	MUELLE BLOQUEO PARALELO SP
15	G16620160	FERMO PARALLELO	PARALLEL LOCK	ARRET PARALLELOGRAMME	FESTSTELLVORRICHTUNG PARALLELO	BLOQUEO PARALELO
16	G18801610	BOCCOLA 10,25X16 X11 ZN	BUSHING 10.25 X 16 X 11- GALVA	BOITE 10-25X16 X11 ZN	BsCHSE 10-25X16 X11 ZN	CASQUILLO 10-25X16 X11 ZN
17	G16620310	CORPO CENTRALE SP540	CENTRAL CASING SP540	CORPS CENTRALE SP540	MITTELKTRPER SP540	CUERPO CENTRAL SP540
18	F01020168	VITE M12X1,75X90 U5737 8.8 ZN	BOLT 12X90 5737 8.G GALVANIZED	VIS 12X90 5737 8.G ZN	SCHRAUBE 12X90 5737 8.G ZN	TORNILLO 12X90 5737 8.G ZN
19	F01430023	ROS.M10 10,5X 18X0,9 U8842J ZN	WASHER D10 DIN 6798 D.INT.ZN	RONDELLE D10 DIN 6798 D. INT.	UNT. SCHEIBE D10 DIN 6798 D.IN	ARANDELA D10 DIN 6798 D.INT.ZN
20	G16620550	SUPPORTO REGOLAZIONE	REGULATION SUPPORT	SUPPORT R+GLAGE	HALTERUNG EINSTELLUNG	SOPORTE REGULACIËN
21	G19003400	ASTA INDICAZIONE PROFONDITA'	DEPTH INDICATING ROD	TIGE INDICATION PROFONDEUR	TIEFENANZEIGESTAB	VARILLA INDICACIÓN PROFUNDIDAD
22	F02250077	RIVETTO STR. 3X 14 U9200A AL	3X14 ALUMINIUM PULL RIVET	RIVET A RUPTURE 3X14 ALUMINIUM	REISSNIETE3X14 ALL.	REMACHE DESGAR. 3X14 ALL.
23	F01020122	VITE 10X 1,5X 70 U5737 8.8 ZN	BOLT 10X 1,5X 70 U5737 8.8 ZB	VIS 10X 1,5X 70 U5737 8.8 ZB	SCHR.10X 1,5X 70 U5737 8.8 ZB	TORN.10X 1,5X 70 U5737 8.8 ZB
24	F01020112	VITE M10X 1,5X45 U5737 8.8 ZN	BOLT 10X45 5737 8.G GALVANIZED	VIS 10X45 5737 8.G ZN	SCHRAUBE 10X45 5737 8.G ZN	TORNILLO 10X45 5737 8.G ZN
25	G18903140	MOLLA GUIDATUBO	PIPE GUIDE SUPPORT	RESSORT GUIDE-TUBE	FEDER ROHRFsHRUNG	MUELLE GUA TUBOS A
26	F01020183	VITE 12X1,75X170 U5737 8.8 ZN	BOLT 12X170 5737 8.G GALVANIZ.	VIS 12X170 5737 8.G ZN	SCHRAUBE 12X170 5737 8.G ZN	TORNILLO 12X170 5737 8.G ZN
27	G22230057	MOZZO ANTERIORE	ANT. HUB	MOYEU AVANT	VORDERNABE	CUBO DELANTERO
28	G66349003	BOCCOLA SINT.	BUSHING- SINTERED	BOITE FRITTEE	SYNTH. BUECHSE	CASQUILLO SINT.
29	G16620730	MONT.BRACCIO INFER.ELEMENTO				
30	G65337015	MOLLA TRAZ.ZN REGOL.ELEM. SP	TRACTION SPRING ZN REGUL. ELEM	RESSORT TRACT. ZN REGL. ELEMEN	ZUGFEDER ZN ELEMENTEINSTELLUNG	MUELLE TRAC. ZN REGUL.ELEM. SP
31	G16610010	VITE A MARTELLO M14X165	WINGED SCREW M14X165	VIS A TETE MARTEAU M14X165	ZWEIFLÜGEL- SCHRAUBEN M14X165	TORNILLO DE MARIPOSA M14X165
32	G16610020	VITE A MARTELLO M14X215	WINGED SCREW M14X215	VIS A TETE MARTEAU M14X215	ZWEIFLÜGEL- SCHRAUBEN M14X215	TORNILLO DE MARIPOSA M14X215
33	G15422091	SUPPORTO SCATOLA RINVIO	GEARBOX SUPPORT	SUPPORT BOITE DE RENVOI	HALTERUNG VORGELEGEGEH-USE	SOPORTE CAJA TRANSMISIËN

TAV. 221

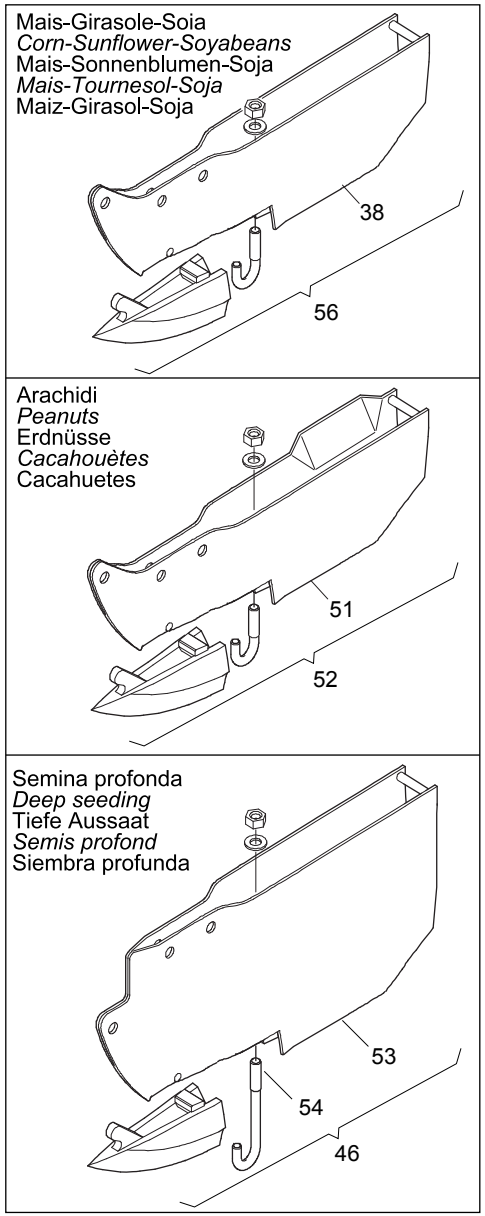

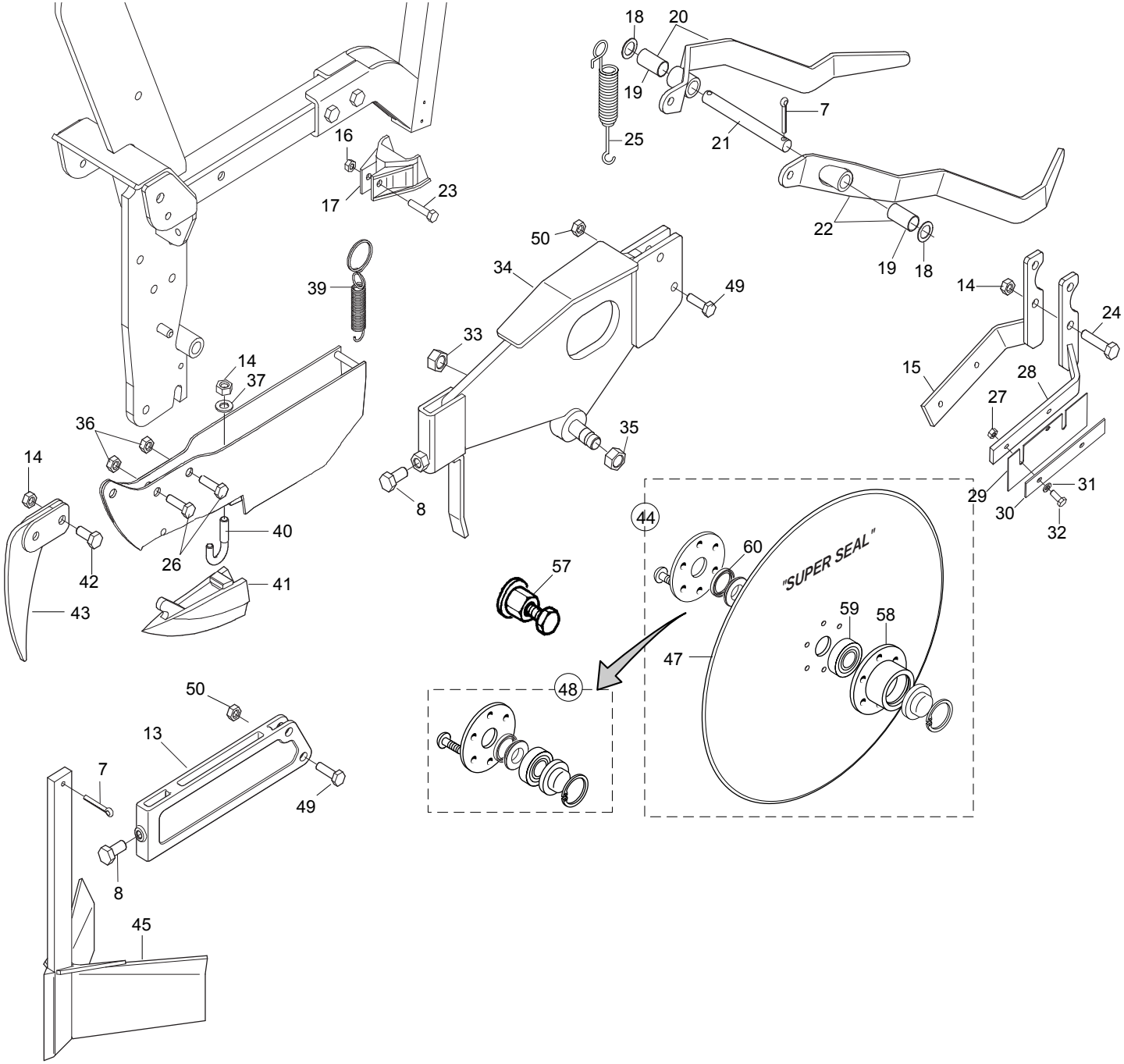

GASPARDO

ELEMENTI ASSOLCATORI "SP"

TAV. 221

Pos.	Cod.	Descrizione	Description	Description	Benennung	Descripcion
1	G65337015	MOLLA TRAZ.ZN REGOL.ELEM. SP	TRACTION SPRING ZN REGUL. ELEM	RESSORT TRACT. ZN REGL. ELEMEN	ZUGFEDER ZN ELEMENTEINSTELLUNG	MUELLE TRAC. ZN REGUL.ELEM. SP
2	G18903690	ATTACCO MOLLA	SPRING COUPLING	FIXATION RESSORT	KUPPLUNG FEDER	CONEXIN MUELLE O
3	G15422420	ATTACCO MOLLA SPARTIZOLLE	SOD BREAKER SPRING COUPLING	FIXATION RESSORT ECART. MOTTES	FEDERANSCHLUSS KLOTENRZUMER	CONEXIN MUELLE DIVISOR TERRONO
4	F01220022	DADO M 8X1,25 D980 8 ZN	SELF LOCKING NUT M8X1,25 980V	ECROU AUTOBL. M8X1,25 980-V	SELBSTSP.MUTT. M8X1,25 980-V	DADO AUTOBL. M8X1,25 980-V
5	G15422400	ASSE SPARTIZOLLE MOBILE	MOBILE SOD BREAKER SPINDLE	AXE ECARTEUR MOTTES MOBILE	ACHSE MOBILER KLOTENRZUMER	EJE DIVISOR DE TERRONES MVIL A
6	G15422390	SUPPORTO SPARTIZOLLE MOBILE	MOBILE SOD BREAKER SUPPORT	SUPP. ECARTEUR MOTTES MOBILE	HALTERUNG MOBILER KLOTENRZUMER	SOPORTE DIVISOR DE TERRONES MO
7	F02200227	COPIGLIA 5X 30 U1336 ZN	SPLIT PIN 5 X30 1336 GALVAN.	GOUPILLE 5 X30 1336 ZN	SPLINT 5 X30 1336 ZN	PASADOR 5 X30 1336 ZN
8	F01020510	VITE M12X1,75X30 U5739 8.8 ZN	BOLT M 12X30	VIS M 12X30	SCHRAUBE M 12X30	TORNILLO M 12X30
9	G15422410	FERMO SPARTIZOLLE MOBILE	MOBILE SOD BREAKER STOP	ARRET ECARTEUR MOTTES MOBILE	FESTSTELLVOR. MOBILER KLOTENRZ	BLOQUEO DIVISOR DE TERRONES MO
10	G18800560	BOCCOLA 8,25 X16 X7	BUSHING 8.25 X 16 X 7	BOITE 8-25 X16 X7	BsCHSE 8-25 X16 X7	CASQUILLO 8-25 X16 X7
11	F01420048	ROS.M8 8,4X 24X 2 U6593 ZN	PLANE WASHER D.8	RONDELLE D.8	SCHEIBE D.8	ARANDELA D.8
12	F01020063	VITE M8X1,25X 35 U5737 8.8 ZN	BOLT 8 X35 5737 8.G GALVANIZED	VIS 8 X35 5737 8.G ZN	SCHRAUBE 8 X35 5737 8.G ZN	TORNILLO 8 X35 5737 8.G ZN
13	G19203990	SUPP.SPARTIZOLLE				
14	F01200270	DADO M10X 1,5 U5588 6.8 ZN	NUT M10	ECROU M10	MUTTER M10	DADO M10
15	G15422211	SUPP.RASCHIATERRA DISCHI DX	RIGHT SOIL SCRAPER DISC SUPP.	SUPP.RACLE-BOUE DISQUES DRT	HALTER.ERDSCHABER SCHEIBEN REC	SOP.RASCADOR TIERRA DISCOS DER
16	F01230022	DADO M 6X 1 D982 8 ZN	NORM.SELF-LOCKING NUT 6 GALVAN	ECROU AUTOB.NOR.6 ZN	SELBSTSP. MUTTER NOR.6 ZN	TUERCA AUTOB. NOR. 6 ZN
17	G19002701	PROTEZIONE FOTOCELLULA >	PHOTOCELL PROTECTION	PROTECT CAPT PHOTOC SP4 >	SCHUTZ PHOTOZELLE	PROTECCIN FOTOCLULA PR
18	G18701820	RONDELLA 16,5X25X1,0 ZN	WASHER 16.5 X 25 X 1- GALVAN.	RONDELLE 16,5 X25 X1 ZN	UNTERLEGSCHEIBE 16,5 X25 X1 ZN	ARANDELA 16,5 X25 X1 ZN
19	F04150024	BOCCOLA PAP 15X17X25	PAP BUSH 15X17X25	BOITE PAP 15X17X25	BsCHSE PAP 15X17X25	CASQUILLO PAP 15X17X25
20	G16620690	COPRISEME MAIS DX				
21	G15421080	ASSE COPRISEME ZN	SEED COVER SPINDLE ZN	AXE COUVRE-GRAINES	SAMENDECKACHSE ZN	EJE CUBRESEMILLA ZN
22	G16620700	COPRISEME MAIS SX				
23	F01020408	VITE M 6X 1X 30 U5739 8.8 ZN	BOLT M 6X1X30	VIS M 6X1X30	SCHRAUBE M 6X1X30	TORNILLO M 6X1X30
24	F01020110	VITE M10X 1,5X40 U5737 8.8 ZN	BOLT 10X40 5737 8.G GALVANIZED	VIS 10X40 5737 8.G ZN	SCHRAUBE 10X40 5737 8.G ZN	TORNILLO 10X40 5737 8.G ZN
25	G18903170	MOLLA TRAZ.ZN RASCHIAT. SP530	TRACTION SPRING ZN SCRAPER SP5	RESSORT TRACT. ZN RACLEUR SP53	ZUGFEDER ZN ABSCHABER SP530	MUELLE TRAC. ZN RASCADOR SP530
26	F01020476	VITE M10X 1,5X30 U5739 8.8 ZN	BOLT M 10X30	VIS M 10X30	SCHRAUBE M 10X30	TORNILLO M 10X30
27	F01200232	DADO M 6X 1 U5588 6.8 ZN				
28	G15422221	SUPP.RASCHIATERRA DISCHI SX	LEFT SOIL SCRAPER DISC SUPP.	SUPP.RACLE-BOUE DISQUES GCH	HALTER.ERDSCHABER SCHEIBEN LIN	SOP.RASCADOR TIERRA DISCOS IZQ
29	G15422231	RASCHIATERRA DISCO				
30	G15423400	DISTANZIALE	SPACER	ENTRETOISE	DISTANZSTsCK	DISTANZSTsCK
31	F01420036	ROS.M6 6,4X 18X 2 U6593 ZN	FLAT WASHER 6-6X 18X2 6593 ZN	ROND. PLATE 6-6X 18X2 6593 ZN	SCHEIBE 6-6X 18X2 6593 ZN	ARAND. PLANA 6-6X 18X2 6593 ZN
32	F01020403	VITE M 6X 1X 16 U5739 8.8 ZN	BOLT M 6X16	VIS M 6X16	SCHRAUBE M 6X16	TORNILLO M 6X16
33	F01200442	DADO M16X 1,5 U5589 6.8 ZN	NUT 16X1-5 UNI 5589 6.8 GALVAN	ECROU 16X1-5 UNI 5589 6.8 ZN	MUTTER 16X1-5 UNI 5589 6.8 ZN	TUERCA 16X1-5 UNI 5589 6.8 ZN
34	G15422361	SUPPORTO DISCHI	DISKS SUPPORT	SUPPORT DISQUES	SCHEIBENHALTERUNG	SOPORTES DISCOS
35	G15220540	DADO M16X1,5 SX	NUT M16X1-5 LEFT	ECROU M16X1-5 GCH	MUTTER M16X1-5 LI	TUERCA M16X1-5 IZQ
36	F01220033	DADO M10X 1,5 D980 8 ZN	NUT M10X 1,5 D980 8 ZB	ECRO.M10X 1,5 D980 8 ZB	MUTT.M10X 1,5 D980 8 ZB	TUER.M10X 1,5 D980 8 ZB
37	F01430023	ROS.M10 10,5X 18X0,9 U8842J ZN	WASHER D10 DIN 6798 D.INT.ZN	RONDELLE D10 DIN 6798 D. INT.	UNT. SCHEIBE D10 DIN 6798 D.IN	ARANDELA D10 DIN 6798 D.INT.ZN
38	G15420713	LAMIERE FALCIONE MAIS SP540	MAIZE COULTER SHEET SP540	TÈLES SOC MA¤S SP540	BLECHE S-SCHAR MAIS SP540	CHAPAS BOTA MA-Z SP540
39	G18902481	MOLLA TRAZIONE AGG.FALCIONE	COULTER HOOK-UP TRACT. SPRING	RESSORT TRACTION FIX. SOC	ZUGFEDER KUPPL. SÄSCHAR	MUELLE TRACCIÓN CONEX. BOTA
40	G22270428	GANCIO TAGLIENTE SP/S	HOOK - CUTTER SP/S	CROCHET HACHOIR SP/S	HAKEN SZSCHAR SP/S	GANCHO GUADA¾ADORA SP/S
41	G22270397	TAGLIENTE FALCIONE MAIS SP/S	CORN CUTTER EDGE SP/S	POINTE DE SOC MAIS SP520/540	SCHARSCHNEIDE MAIS SP/S	FILO DE CORTE. GUADA¾AD. MAIZ
42	F01020472	VITE M10X 1,5X25 U5739 8.8 ZN	BOLT 10X25 5739 8.G GALVANIZED	VIS 10X25 5739 8.G ZN	SCHRAUBE 10X25 5739 8.G ZN	TORNILLO 10X25 5739 8.G ZN
43	G15423390	PROLUNGA FALCIONE	COULTER EXTENSION	RALLONGE SOC	VERLÄNGERUNG SÄSCHAR	PROLONGACIÓN BOTA
44	G15225500	DISCO ASSOLC.PROTETTO COMPL.	COMPL. PROTECTED DISC COULTER	DISQUE DU SOC PROT+G+ COMPLET	GESCH_TZTE FURCHENFORMSCHEIBE	DISCO SURC.PROTEGIDO COMPL.
45	G15420852	ASS.SPIANATERRA	GROUND LEVELLER	CHASSE MOTTE SP540	EINHEIT ERDEBNER	APLANADORA DE TIERRA
46	G16620231	FALCIONE SEMINA PROFONDA	DEEP SEEDING COULTER	SOC SEMIS PROFOND	S-SCHAR TIEFE SAAT	BOTA SIEMBRA PROFUNDA
47	G13825091	DISCO ASSOLCATORE D.373	FURROW OPENER DISK D.373	DISQUE D. 373 6 T.D.6	SCHEIBE SZSCHARENREISSER D.373	DISCO SURCADOR D.373
48	G15226600	KIT X DISCO SUPER SEAL				
49	F01020479	VITE M10X 1,5X35 U5739 8.8 ZN	BOLT M 10X35	VIS M 10X35	SCHRAUBE M 10X35	TORNILLO M 10X35
50	F01200416	DADO M10X 1,5 U5589 6S ZN	NUT 10 UNI5589 6.8 GALVANIZED	ECROU 10 UNI 5589 6.8 ZN	MUTTER 10 UNI 5589 6.8 ZN	TUERCA 10 UNI 5589 6.8 ZN
51	G16620240	SUPPORTO FALCIONE ARACHIDI	SUPPORT PEANUT CUTTER	SUPPORT HACHOIR ARACHIDES	HALTERUNG SZSCHAR ERDN_SSE	SOPORTE GUADA¥ADORA CACAHUETE
52	G16620260	FALCIONE ARACHIDI COMPL.SP540	COMPL. PEANUT COULTER SP540	HACHOIR ARACHIDES COMPL.SP540	S-SCHAR ERDN_SSE KOMPL.SP540	BOTA CACAHUETES COMPL. SP540
53	G16620181	SUPPORTO FALCIONE SEMINA PROF.	CUTTER SUPPORT ASS. DEEP SEEDI	SUPPORT DE SOC SEMIS PROFOND	HALTERUNG SZSCHAR TIEFE AUSSA	CONJ. SOPORTE GUAD. SIEMBRA PR
54	G16620220	GANCIO TAGLIENTE SEM.PROFONDA	HOOK - CUTTER DEEP SEEDING	CROCHET HACHOIR SEMIS PROFOND	HAKEN SZSCHAR TIEFE AUSSAAT	GANCHO FILO DE CORTE SIEMBRA P
55	F01020481	VITE M10X 1,5X40 U5739 8.8 ZN	BOLT 10X40 5739 8.G GALVANIZED	VIS 10X40 5739 8.G ZN	SCHRAUBE 10X40 5739 8.G ZN	TORNILLO 10X40 5739 8.G ZN
56	G15420735	MONT.FALCIONE MAIS SP99				
57	G15225240	ESTRATTORE DISCHI ELEMENTO MT	SEED PLATE EXTRACTOR ELEM. MT	EXTRACTEUR DISQUE ELEMENT MT	SCHEIBENAUSZIEHER ELEMENT MT	EXTRACTOR DISCOS ELEMENTO MT
58	G15223651	SUPPORTO CUSCINETTO DISCO	DISK BEARING SUPPORT	SUPPORT PALIER DISQUE	SCHEIBENLAGERBsCHSE	SOPORTE COJINETE DISCO
59	F04010084	CUSC.D17D47 B22,2 3303 LLU/DDU	BEARING 3303 2RS	PALIER 3303 2RS	LAGER 3303 2RS	COJINETE 3303 2RS
60	F03011075	AN. TENUTA B1OF 24X32X4	SEALING RING G24X32X4	BAGUE D'ETANCHEITE G24X32X4	DICHTRING G24X32X4	ANILLO AISLADOR G24X32X4

TAV. 231

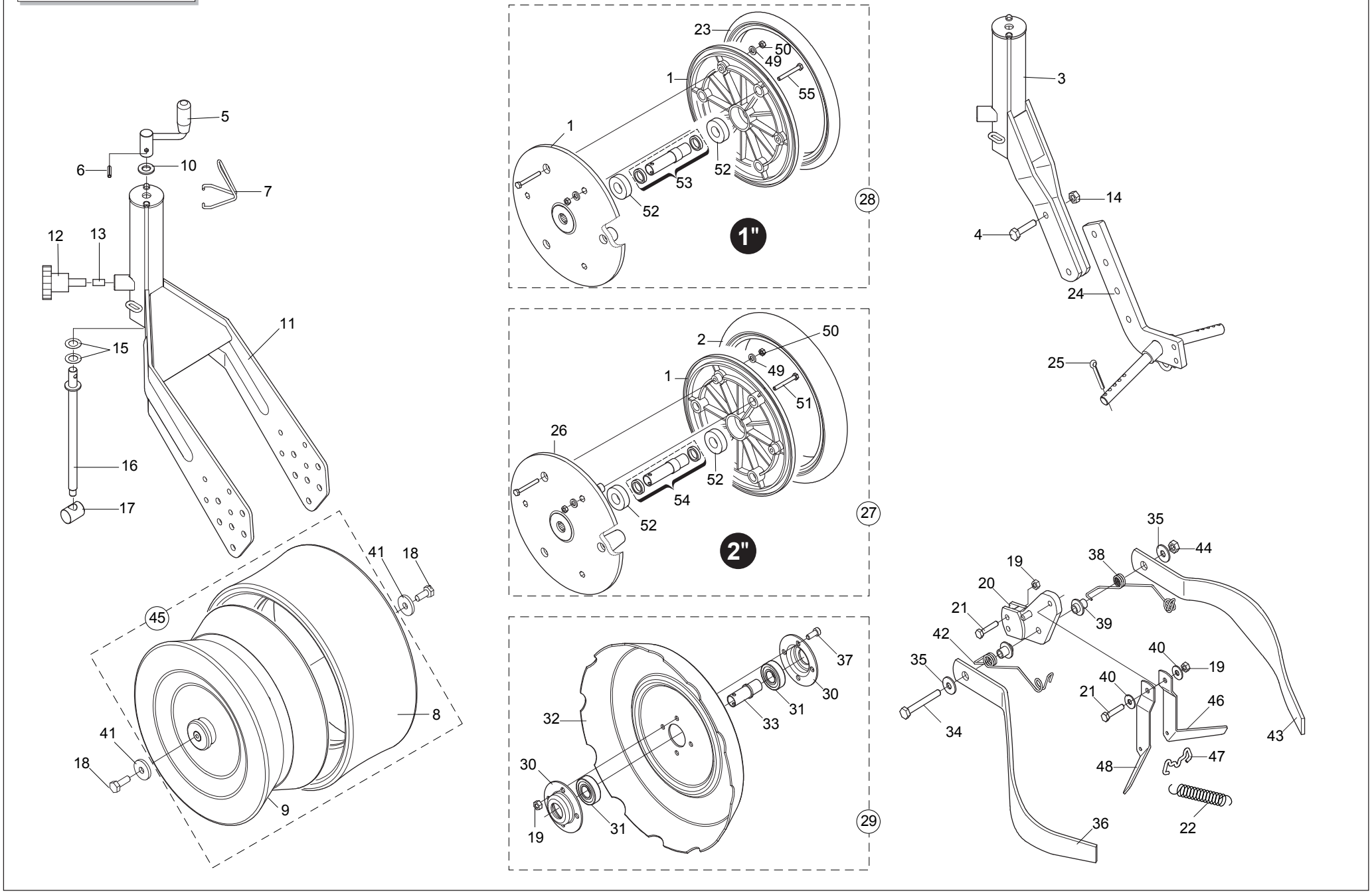

GASPARDO

RUOTE DI COMPRESSIONE "SP"

TAV. 231

Pos.	Cod.	Descrizione	Description	Description	Benennung	Descripcion
1	F06120146	SEMICERCHIO PLA RUOTA 1"	PLASTIC HALF RIM 1' WHEEL	DEMI-JANTE PLAST. ROUE 1"	HALBFELGE PLA RAD 1"	SEMIARO PL-ST.RUEDA 1"
2	F06120165	COPERTURA 2' X 13'	RUBBER RING 2X13'	COUVERT FARMF ROUE COMPR 2"X13	MANTEL 2' X 13'	CUBIERTA 2' X 13'
3	G15420913	SUPPORTO RUOTE A V	V-WHEEL SUPPORT	SUPPORT ROUES EN V	V RADER HALTERUNG	SOPORTE RUEDAS A V
4	F01020481	VITE M10X 1,5X40 U5739 8.8 ZN	BOLT 10X40 5739 8.G GALVANIZED	VIS 10X40 5739 8.G ZN	SCHRAUBE 10X40 5739 8.G ZN	TORNILLO 10X40 5739 8.G ZN
5	G22270235	MANIGLIA REGOLAZIONE B4	ADJUSTMENT HANDLE B4	POIGNEE REGLAGE B4	EINSTELLGRIFF B4	MANIJA REGULACIN B4 M
6	F02100109	SPINA E.P. 6X 24 U6873 C70 BR	PIN EL. .6 X24 DIN 1481	FICHE EL. 6 X24 DIN 1481	SPANNSTIFT 6 X24 DIN 1481	CLAVIJA EL.6 X24 DIN 1481
7	G65336100	MOLLA SPEC.FERMO MANIGLIA SP	SPEC SPRING HANDLE STOP SP	RESSORT SPEC. ARRET POIGNEE SP	SPEZIALFEDER GRIFFSPERRE SP	MUELLE ESPEC. BLOQUEO MANIJA S
8	F06120155	COPERTURA FARMF.370X165 'A'	COVERING FARMF.370X165 'A'	COUVERTURE FARMF. 370X165 'A'	MANTEL FARMF.370X165 'A'	CUBIERTA FARMF.370X165 'A'
9	F06120022	CERCHIO FARMF.370X165 COMPL.	FARMFLEX RING 370X165 ASSY.	JANTE FARMF. 370X165 COMPL.	REIFEN FARMF.370X165 KOMPL.	LLANTA FARMF.370X165 COMPL.
10	F01410088	ROS.M14 15X 28X2,5 U6592 ZN	WAS.M14 15X 28X2,5 U6592 ZB	RON.M14 15X 28X2,5 U6592 ZB	SCH.M14 15X 28X2,5 U6592 ZB	ARA.M14 15X 28X2,5 U6592 ZB
11	G16620430	SUPPORTO RUOTE				
12	F06220013	VOLANT.8L.PERN.M12X30-40 VPA55	8-LOBE PIN HANDWHEEL M12X30-40	VOLANT 8 LOBES PIVOT M12X30-40	HANDRAD.8L.ZAPFENM12X30-40 VPA	VOLDEL.8L.PERN.M12X30-40 VPA55
13	G14820991	FERMO REGOLAZIONE	ADJUSTMENT STOP	BUTEE REGLAGE	EINSTELLUNGSSPERRE	BLOQUEO REGULACIËN
14	F01200270	DADO M10X 1,5 U5588 6.8 ZN	NUT M10	ECROU M10	MUTTER M10	DADO M10
15	G22220073	RONDELLA 28X0,3X16,5	WASHER 28X0-3X16-5	RONDELLE 28X0-3X16-5	UNTERLEGSCHEIBE 28X0-3X16-5	ARANDELA 28X0-3X16-5
16	G22230062	VITE DI REGOLAZIONE	ADJUSTMENT BOLT	VIS DE REGLAGE	EINSTELLSCHRAUBE	TORNILLO DE REGULACIN S
17	G22230063	ELEMENTO ARTICOLATO	ARTICULATED ELEMENT	ELEMENT ARTICULE	GELENKELEMENT	ELEMENTO ARTICULADO
18	F01020476	VITE M10X 1,5X30 U5739 8.8 ZN	BOLT M 10X30	VIS M 10X30	SCHRAUBE M 10X30	TORNILLO M 10X30
19	F01220022	DADO M 8X1,25 D980 8 ZN	SELF LOCKING NUT M8X1,25 980V	ECROU AUTOBL. M8X1,25 980-V	SELBSTSP.MUTT. M8X1,25 980-V	DADO AUTOBL. M8X1,25 980-V
20	G15423460	ATTACCO COPRISEME RASCHIATERRA	SOIL SCRAPER SEED COV.LINKAGE	FIXATION COUVRE-GRAINES RACLEU	KUPPLUNG SAMENABDEC.ERDSCHABER	CONEXIÓN CUBRESEM.RASCADOR TI.
21	F01020449	VITE M 8X1,25X35 U5739 8.8 ZN	BOLT M 8X35	VIS M 8X35	SCHRAUBE M 8X35	TORNILLO M 8X35
22	G65337028	MOLLA TRAZ.ZN SUPP.RUOTA SV	TRACTION SPRING ZN WHEEL SUPP.	RESSORT TRACT. ZN SUPPORT ROUE	ZUGFEDER ZN RADHALTERUNG SV	MUELLE TRAC. ZN SOPORTE RUEDA
23	F06120181	ANELLO IN GOMMA 1 POLLICE MT	RUBBER RING 1X12'	COUVERT FARMF ROUE COMPR 1"X12	MANTEL FARMF.R.DRUCK .MT	CUBIERTA FARMF. R. COMPR. MT
24	G15423840	REGOLAZIONE RUOTE	WHEEL ADJUSTMENT	REGLAGE ROUES	RADEINSTELLUNG	REGULACIÓN RUEDAS
25	F02200227	COPIGLIA 5X 30 U1336 ZN	SPLIT PIN 5 X30 1336 GALVAN.	GOUPILLE 5 X30 1336 ZN	SPLINT 5 X30 1336 ZN	PASADOR 5 X30 1336 ZN
26	F06120147	SEMICERCHIO PLA RUOTA 2"	PLASTIC HALF RIM 2' WHEEL	DEMI-JANTE PLAST. ROUE 2"	HALBFELGE PLA RAD 2"	SEMIARO PL-ST.RUEDA 2"
27	F06120075	RUOTA DA 2 POLLICI MT	RUBBER WHEEL 2'X13' PLA.2 BEAR	ROUE CAOUTCHOUTEE	GUMMIRAD	RUEDA DE CAUCHO
28	F06120076	RUOTA DA 1 POLLICE MT	RUBBER WHEEL 1'X12' PLA.2 BEAR	ROUE CAOUTCHOUTEE	GUMMIRAD	RUEDA DE CAUCHO
29	G15423860	RUOTA POSTERIORE COMPL.	REAR WHEEL ASSY	ROUE POSTERIEURE COMPL.	HINTERES RAD KOMPLETT	RUEDA TRASERA COMPL.
30	G16242190	SUPPORTO CUSCINETTO	BEARING SUPPORT	SUPPORT PALIER	LAGERBsCHSE	SOPORTE COJINETE
31	F04010165	CUSC.D20 D47 B14 6204,2RSC3	BEARING 6204 2RS	PALIER 6204 2RS	LAGER 6204 2RS	COJINETE 6204 2RS
32	G14820871	RUOTA POSTERIORE FERRO	REAR IRON WHEEL	ROUE ARRIERE FER	EISENHINTERRAD	RUEDA TRAS. HIERRO
33	G15423850	BOCCOLA RUOTA FERRO	STEEL WHEEL BUSH	DOUILLE ROUE FER	BÜCHSE EISENRAD	BUJE RUEDA DE HIERRO
34	F01020128	VITE M10X 1,5X80 U5737 8.8 ZN				
35	F01420060	ROS.M10 10,5X 30X2,5 U6593 ZN	WASHER 10,5X30	RONDELLE 10,5X30	SCHEIBE 10,5X30	ARANDELA 10,5X30
36	G10120621	COPRISEME SX	LEFT SEED COVER	COUVRE-GRAINES GHT.	LINKER SAMENABDECKER	CUBRESEMILLA IZQ.
37	F01040091	VITE M 8X1,25X20 U5931 8.8 ZN	SCREW 8 X20 5931 8.G ZN	VIS 8 X20 5931 8.G ZN	SCHRAUBE 8 X20 5931 8.G ZN	TORNILLO 8 X20 5931 8.G ZN
38	G18902910	MOLLA COPRISEME DX SP	RIGHT SEED COVER SPRING SP	RESSORT COUVRE-GRAINE DRT SP	FEDER SAMENABDECKER RE SP	MUELLE CUBRESEMILLAS DER SP
39	G15422500	BOCCOLA SUPP.MOLLA COPRISEMI	SEED COVER SPRING SUPPORT BUSH	BOITE SUPP. RESSORT COUVRE-GR.	BsCHSE HALTERUNG FEDERSAMENABD	CASQUILLO SUPER.MUELLE CUBRESE
40	F01420048	ROS.M8 8,4X 24X 2 U6593 ZN	PLANE WASHER D.8	RONDELLE D.8	SCHEIBE D.8	ARANDELA D.8
41	G18701140	RONDELLA 11 X35 X5	WASHER 11 X 35 X 5	RONDELLE 11 X35 X5	UNTERLEGSCHEIBE 11 X35 X5	ARANDELA 11 X35 X5
42	G18902920	MOLLA COPRISEME SX SP	LEFT SEED COVER SPRING SP	RESSORT COUVRE-GRAINE GCH SP	FEDER SAMENABDECKER LI SP	MUELLE CUBRESEMILLAS IZQ SP
43	G10120611	COPRISEME DX	RIGHT SEED COVER	COUVRE-GRAINES DRT.	RECHTER SAMENABDECKER	CUBRESEMILLA DER.
44	F01220033	DADO M10X 1,5 D980 8 ZN	NUT M10X 1,5 D980 8 ZB	ECRO.M10X 1,5 D980 8 ZB	MUTT.M10X 1,5 D980 8 ZB	TUER.M10X 1,5 D980 8 ZB
45	G14821590	RUOTA FARMFLEX 370X165 PROF.A	FARMFLEX WHEEL 370X165 DEPTH.A	ROUE FARMFLEX 370X165 PROF.A	RAD FARMFLEX 370X165PROF.A	RUEDA FARMFLEX
46	G15422481	RASCHIATERRA DX RUOTE A V	RIGHT 'V' WHEEL SOIL SCRAPER	RACLEUR DRT ROUES EN 'V'	ERDSCHABER RE 'V'-FTRMIGE RZDE	RASCADOR TIERRA DER RUEDAS EN
47	G18902930	AGGANCIO RASCHIATERRA	SOIL SCRAPER HOOK	ATTELAGE RACLEUR	KUPPLUNG ERDSCHABER	ENGANCHE RASCADOR TIERRA
48	G15422491	RASCHIATERRA SX RUOTE A V	LEFT 'V' WHEEL SOIL SCRAPER	RACLEUR GCH ROUES EN 'V'	ERDSCHABER LI 'V'-FTRMIGE RZDE	RASCADOR TIERRA IZQ RUEDAS EN
49	F01410037	ROS.M6 6,4X12,5X1,6 U6592 ZN	PLANE WASHER D.6	RONDELLE D.6	SCHEIBE D.6	ARANDELA D.6
50	F01230022	DADO M 6X 1 D982 8 ZN	NORM.SELF-LOCKING NUT 6 GALVAN	ECROU AUTOB.NOR.6 ZN	SELBSTSP. MUTTER NOR.6 ZN	TUERCA AUTOB. NOR. 6 ZN
51	F01020042	VITE M 6X 1X 50 U5737 8.8 ZN	BOL.M 6X 1X 50 U5737 8.8 ZG	VIS 6 X50 5737 8.G ZN	SCHRAUBE 6 X50 5737 8.G ZN	TORNILLO 6x50 5737 8.G ZN
52	F04010131	CUSC.D20 D42 B12 6004-2RSH EX>	BEARING 6004 2RS EX. SKF	ROULEMENT 6004	LAGER 6004	COJINETE 6004
53	G15226610	KIT DIST./GUARNIZIONI RUOTA V1				
54	G15226620	KIT DIST./GUARNIZIONI RUOTA V2				
55	F01020406	VITE M 6X 1X 25 U5739 8.8 ZN	BOLT M 6X25	VIS M 6X25	SCHRAUBE M 6X25	TORNILLO M 6X25

TAV. 241

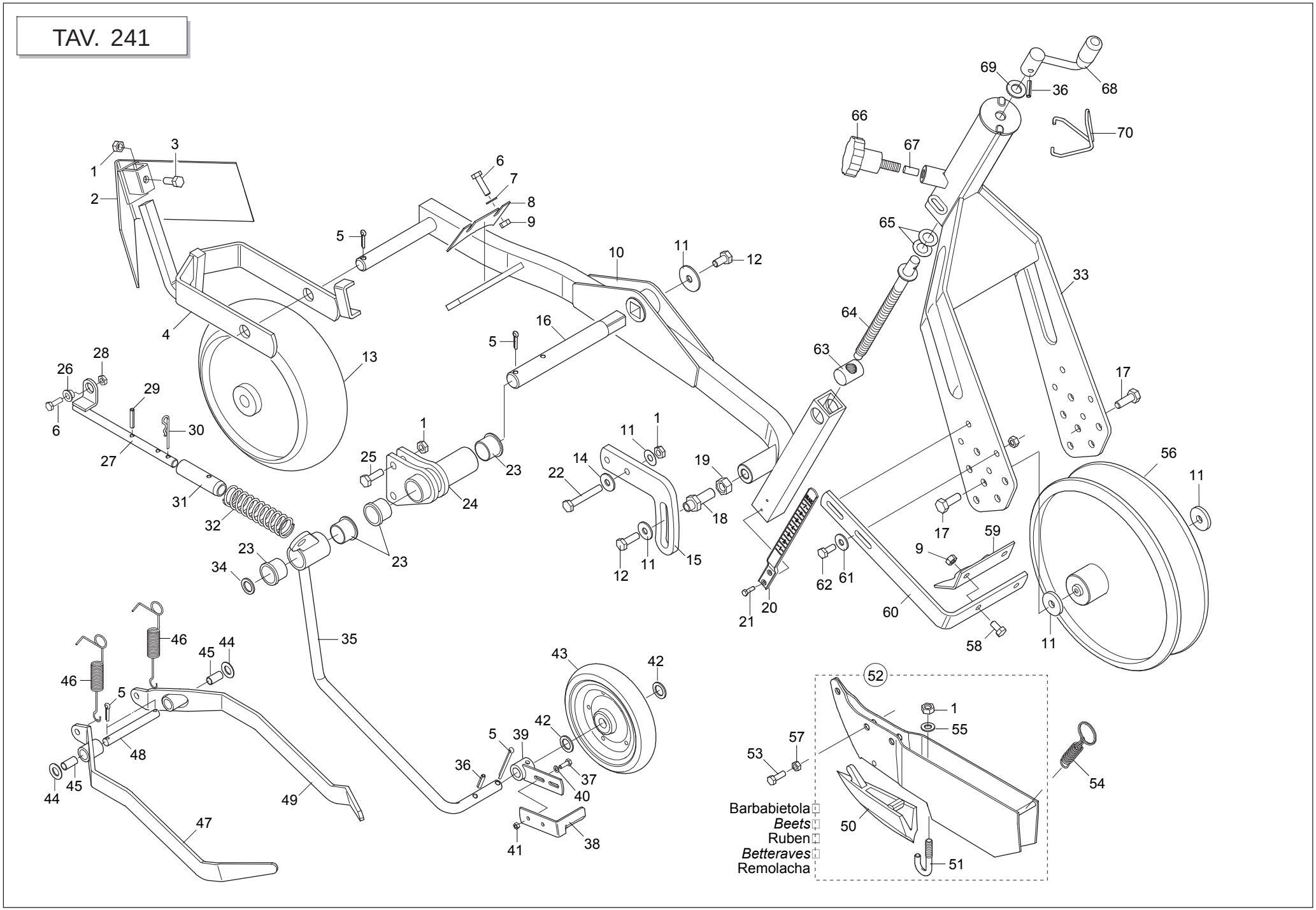

BILANCIERE "SP"

TAV. 241

Pos.	Cod.	Descrizione	Description	Description	Benennung	Descripcion
1	F01200270	DADO M10X 1,5 U5588 6.8 ZN	NUT M10	ECROU M10	MUTTER M10	DADO M10
2	G22270241	SPARTIZOLLE BILANCIERE B4	SOD-BREAKER ROCKERS B4	ECARTEUR DE MOTTES BALANCIER B	KIPPHEBEL KLOTENRZUMER B4	DIVISOR DE TERRONES BALANCN BS
3	F01020472	VITE M10X 1,5X25 U5739 8.8 ZN	BOLT 10X25 5739 8.G GALVANIZED	VIS 10X25 5739 8.G ZN	SCHRAUBE 10X25 5739 8.G ZN	TORNILLO 10X25 5739 8.G ZN
4	G15422672	SUPPORTO RUOTA COMPRESSIONE	COMPRESS. WHEEL SUPPORT	SUPPORT ROUE DE COMPRESSION	HALTERUNG KOMPRESSIONSRAD	SOPORTE RUEDA DE COMPRESION
5	F02200246	COPIGLIA 6X 45 U1336 ZN	SPLIT PIN 6 X45 1336 GALVAN.	GOUPILLE 6 X45 1336 ZN	SPLINT 6 X45 1336 ZN	PASADOR 6 X45 1336 ZN
6	F01020440	VITE M 8X1,25X25 U5739 8.8 ZN	BOLT M8 X25 5739 8.8 ZN	VIS M8 X25 5739 8.8 ZN	SCHRAUBE M8 X25 5739 8.8 ZN	TORNILLO M8 X25 5739 8.8 ZN
7	F01410051	ROS.M8 8,4X 17X1,6 U6592 ZN	PLANE WASHER D.8	RONDELLE D.8	SCHEIBE D.8	ARANDELA D.8
8	G15420510	RASCHIATERRA BILANCIERE	SOIL SCRAPER ROCKER	RACLEUR BALANCIER	ERDSCHABER KIPPHEBEL	RASCADOR TIERRA BALANCN R
9	F01200244	DADO M 8X1,25 U5588 6.8 ZN	NUT M8	ECROU M8	MUTTER M8	DADO M8
10	G16620440	BILANCIERE	ROCKER	BALANCIER	KIPPHEBEL	KIPPHEBEL
11	G18701140	RONDELLA 11 X35 X5	WASHER 11 X 35 X 5	RONDELLE 11 X35 X5	UNTERLEGSCHEIBE 11 X35 X5	ARANDELA 11 X35 X5
12	F01020470	VITE M10X 1,5X20 U5739 8.8 ZN	BOLT M 10X20	VIS M 10X20	SCHRAUBE M 10X20	TORNILLO M 10X20
13	G15420490	RUOTINO ANT.BILANC.D.280	FRONT ROCKER WHEEL D.280	ROUET ANT. BALANC. D 260	KLEINES VORD. RAD KIPPHEBEL D.	RUEDECILLA DEL. BALANCN D.280R
14	F01420060	ROS.M10 10,5X 30X2,5 U6593 ZN	WASHER 10,5X30	RONDELLE 10,5X30	SCHEIBE 10,5X30	ARANDELA 10,5X30
15	G15423251	PIASTRA DI REGOLAZIONE	ADJUSTING PLATE	PLAQUE DE REGLAGE	EINSTELLPLATTE	PLACA DE REGULACIÓN
16	G15422572	ASSE BILANCIERE	ROCKER SPINDLE	AXE BALANCIER	KIPPHEBELACHSE	EJE BALANC
17	F01020476	VITE M10X 1,5X30 U5739 8.8 ZN	BOLT M 10X30	VIS M 10X30	SCHRAUBE M 10X30	TORNILLO M 10X30
18	G15423521	VITE REGOLAZIONE ZN	ADJUSTING SCREW - GALVANIZED	VIS RÉGLAGE ZN	STELLSCHRAUBE ZN	TORNILLO REGULACIÓN ZN
19	F01200432	DADO M14X 1,5 U5589 6S ZN	NUT M14X1.5	ECROU M14X1.5	MUTTER M14X1.5	DADO M14X1.5
20	G19003400	ASTA INDICAZIONE PROFONDITA'	DEPTH INDICATING ROD	TIGE INDICATION PROFONDEUR	TIEFENANZEIGESTAB	VARILLA INDICACIÓN PROFUNDIDAD
21	F02250077	RIVETTO STR. 3X 14 U9200A AL	3X14 ALUMINIUM PULL RIVET	RIVET A RUPTURE 3X14 ALUMINIUM	REISSNIETE3X14 ALL.	REMACHE DESGAR. 3X14 ALL.
22	F01020122	VITE 10X 1,5X 70 U5737 8.8 ZN	BOLT 10X 1,5X 70 U5737 8.8 ZB	VIS 10X 1,5X 70 U5737 8.8 ZB	SCHR.10X 1,5X 70 U5737 8.8 ZB	TORN.10X 1,5X 70 U5737 8.8 ZB
23	G66349003	BOCCOLA SINT.	BUSHING- SINTERED	BOITE FRITTEE	SYNTH. BUECHSE	CASQUILLO SINT.
24	G15423680	SUPPORTO BILANCIERE SP540	ROCKERS SUPPORT SP540	SUPPORT BALANCIER SP540	EINHEIT KIPPHEBEL SP540	SOP. BALANC N SP540
25	F01020110	VITE M10X 1,5X40 U5737 8.8 ZN	BOLT 10X40 5737 8.G GALVANIZED	VIS 10X40 5737 8.G ZN	SCHRAUBE 10X40 5737 8.G ZN	TORNILLO 10X40 5737 8.G ZN
26	G22250398	BOCCOLA BRACCIO SUPERIORE SV/2	UPPER ARM BUSHING SV/2	BOITE BRAS SUP. SV/2	BsCHSE OBERARM SV/2	CASQUILLO BRAZO SUPERIOR SV/2
27	G15423810	SUPPORTO MOLLA	SPRING SUPPORT	SUPPORT RESSORT	FEDERHALTERUNG	SOPORTE MUELLE
28	F01220022	DADO M 8X1,25 D980 8 ZN	SELF LOCKING NUT M8X1,25 980V	ECROU AUTOBL. M8X1,25 980-V	SELBSTSP.MUTT. M8X1,25 980-V	DADO AUTOBL. M8X1,25 980-V
29	F02100087	SPINA E.P. 5X 30 U6873 C70 BR	PIN EL. 5 X30 DIN 1481	FICHE EL. 5 X30 DIN 1481	SPANNSTIFT 5 X30 DIN 1481	CLAVIJA EL.5 X30 DIN 1481
30	F02200363	COPIGLIA R 3X 62 ZN	SPLIT PIN R 3X62	GOUPILLE R 3X62	SPLINT R 3X62	CHAVETA R 3X62
31	G15423820	BOCCOLA NYLON SUPPORTO MOLLA	SPRING-SUPPORTING NYLON BUSH	DOUILLE NYLON SUPPORT RESSORT	NYLONBÜCHSE FEDERHALTERUNG	BUJE NYLON SOPORTE MUELLE
32	G18903670	MOLLA COMPRESSIONE RUOTINO	COMPR. WHEEL SPRING	RESSORT COMPRESSION ROUET	FEDER DsNGUNG ROLLE	MUELLE COMPRESIN RUEDECILLA A
33	G16620430	SUPPORTO RUOTE				
34	G18701590	RONDELLA 25X35X2,5 ZN	WASHER 25 x 35 x2,5 ZB	RONDELLE 25 x 35 x2,5 ZB	UNTERLEGSCHEIBE 25 x 35 x2,5	ARANDELA 25 x 35 x2,5 ZB
35	G15423780	SUPPORTO RUOTINO	WHEEL SUPPORT	SUPPORT ROUET	HALTERUNG ROLLE	SOPORTE RUEDECILLA
36	F02100109	SPINA E.P. 6X 24 U6873 C70 BR	PIN EL. .6 X24 DIN 1481	FICHE EL. 6 X24 DIN 1481	SPANNSTIFT 6 X24 DIN 1481	CLAVIJA EL.6 X24 DIN 1481
37	F01020378	VITE M5X 0,8X 16 U5739 8.8 ZN	BOLT 5X16 5739 8.G GALVANIZED	VIS 5X16 5739 8.G ZN	SCHRAUBE 5X16 5739 8.G ZN	TORNILLO 5X16 5739 8.G ZN
38	G15423271	RASCHIATERRA	SOIL SCRAPER	RACLEUR	ERDSCHABER	RASCADOR TIERRA
39	G15421671	SUPPORTO RASCHIATERRA	SOIL SCRAPER SUPPORT	SUPPORT RACLEUR	HALTERUNG ERDSCHABER	SOPORTE RASCADOR TIERRA
40	F01420022	ROS.M5 5,5X 10X 1 U6593 ZG	WASHER M5 5,5X10X1 U6593 ZG	RONDELLE M5 5,5X10X1 U6593 ZG	SCHEIBE M5 5,5X10X1 U6593 ZG	ARANDELA M5 5,5X10X1 U6593 ZG
41	F01200220	DADO M 5X 0,8 U5588 6.8 ZN	NUT 5 UNI 5588 6.8 GALVANIZED	ECROU 5 UNI 5588 6.8 ZN	MUTTER 5 UNI 5588 6.8 ZN	TUERCA 5 UNI 5588 6.8 ZN
42	G20970025	RONDELLA 25,2X2X16,5	WASHER 25-2X2X16-5	RONDELLE 25-2X2X16-5	UNTERLEGSCHEIBE 25-2X2X16-5	ARANDELA 25-2X2X16-5
43	F06120066	RUOTINO FLEX 170 X 30	FLEX WHEEL 170 X 30	ROUET FLEX 170 X 30	ROLLE FLEX 170 X 30	RUEDECILLA FLEX 170 X 30
44	G18701820	RONDELLA 16,5X25X1,0 ZN	WASHER 16.5 X 25 X 1- GALVAN.	RONDELLE 16,5 X25 X1 ZN	UNTERLEGSCHEIBE 16,5 X25 X1 ZN	ARANDELA 16,5 X25 X1 ZN
45	F04150024	BOCCOLA PAP 15X17X25	PAP BUSH 15X17X25	BOITE PAP 15X17X25	BsCHSE PAP 15X17X25	CASQUILLO PAP 15X17X25
46	G18903170	MOLLA TRAZ.ZN RASCHIAT. SP530	TRACTION SPRING ZN SCRAPER SP5	RESSORT TRACT. ZN RACLEUR SP53	ZUGFEDER ZN ABSCHABER SP530	MUELLE TRAC. ZN RASCADOR SP530
47	G16620720	COPRISEME BIETOLE SX				
48	G15421080	ASSE COPRISEME ZN	SEED COVER SPINDLE ZN	AXE COUVRE-GRAINES	SAMENDECKACHSE ZN	EJE CUBRESEMILLA ZN
49	G16620710	COPRISEME BIETOLE DX				
50	G22270226	TAGLIENTE FALCIONE B4 SP/S	KNIFE COULTER SUGAR BEET SP	POINTE DE SOC BETT SP520/540	SCHARSPITZE RUBE SP	PONTA SURCADOR REMOLACHA SP
51	G22270428	GANCIO TAGLIENTE SP/S	HOOK - CUTTER SP/S	CROCHET HACHOIR SP/S	HAKEN SZSCHAR SP/S	GANCHO GUADA¾ADORA SP/S
52	G15422474	MONT.FALCIONE BIETOLE H118				
53	F01020479	VITE M10X 1,5X35 U5739 8.8 ZN	BOLT M 10X35	VIS M 10X35	SCHRAUBE M 10X35	TORNILLO M 10X35
54	G18902481	MOLLA TRAZIONE AGG.FALCIONE	COULTER HOOK-UP TRACT. SPRING	RESSORT TRACTION FIX. SOC	ZUGFEDER KUPPL. SÄSCHAR	MUELLE TRACCIÓN CONEX. BOTA

TAV. 241

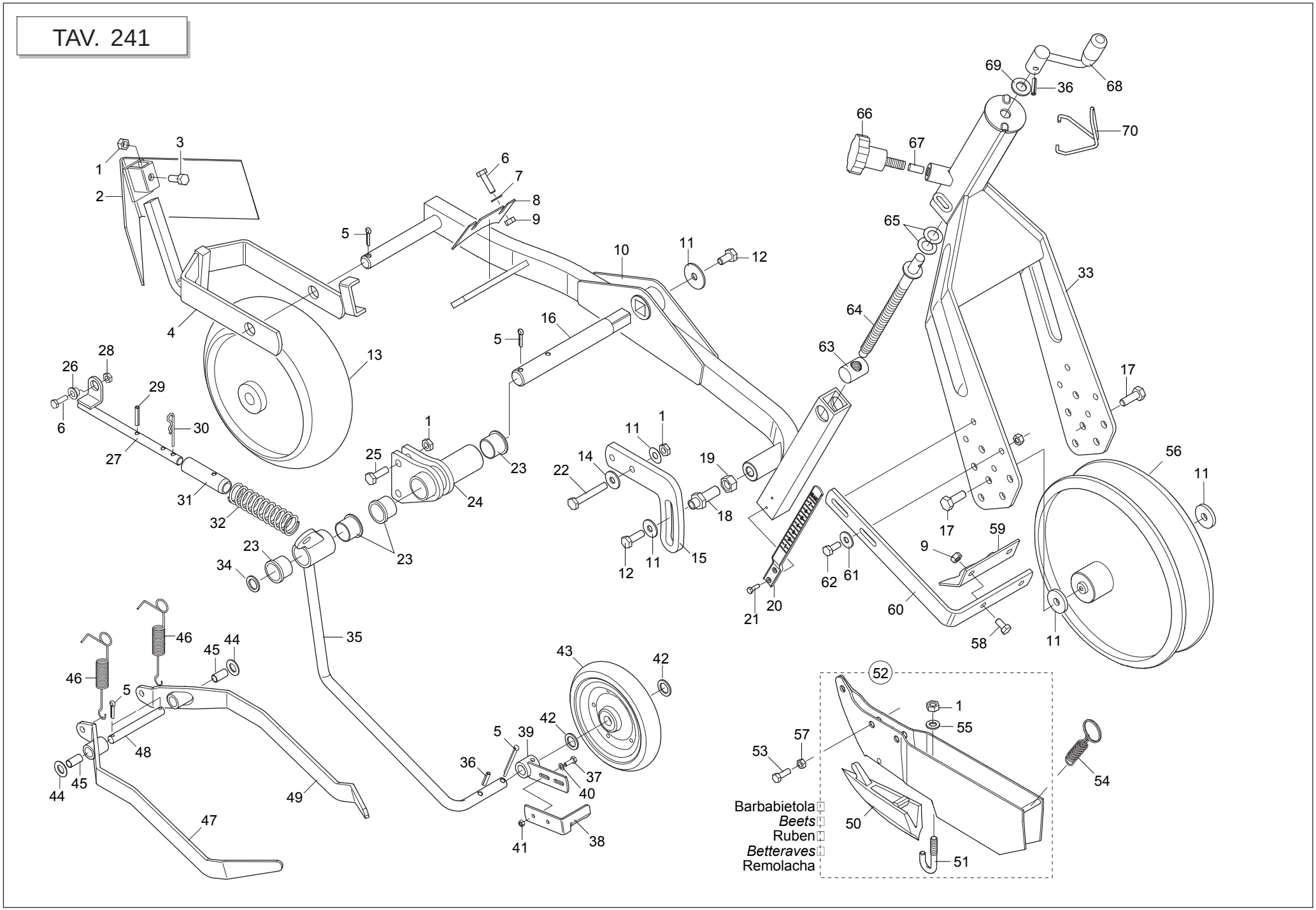

GASPARDO

BILANCIERE "SP"

TAV. 241

Pos.	Cod.	Descrizione	Description	Description	Benennung	Descripcion
55	F01430023	ROS.M10 10,5X 18X0,9 U8842J ZN	WASHER D10 DIN 6798 D.INT.ZN	RONDELLE D10 DIN 6798 D. INT.	UNT. SCHEIBE D10 DIN 6798 D.IN	ARANDELA D10 DIN 6798 D.INT.ZN
56	G15421240	RUOTA 290X80 FLEX	FLEX -BRASILE' WHEEL 290X80	ROUE 290X80 FLEX 'BRASILE'	RAD 290X80 FLEX 'BRASILE'	RUEDA 290X80 FLEX 'BRASILE'
57	F01220033	DADO M10X 1,5 D980 8 ZN	NUT M10X 1,5 D980 8 ZB	ECRO.M10X 1,5 D980 8 ZB	MUTT.M10X 1,5 D980 8 ZB	TUER.M10X 1,5 D980 8 ZB
58	F01020432	VITE M 8X1,25X16 U5739 8.8 ZN	BOLT M 8X16	VIS M 8X16	SCHRAUBE M 8X16	TORNILLO M 8X16
59	G15421030	RASCHIATERRA RUOTA POSTERIORE	SOIL SCRAPER REAR WHEEL	RACLEUR ROUE POSTERIEURE	ERDSCHABER HINTERES RAD	RASCADOR TIERRA TRASERO
60	G15421022	SUPP.RASCHIATERRA RUOTA	SCRAPER SUPPORT WHEEL	SUPP. RACLEUR ROUES	HALTERUNG ERDSCHABER RADER	SOP.RASCADOR TIERRA RUEDAS
61	F01420048	ROS.M8 8,4X 24X 2 U6593 ZN	PLANE WASHER D.8	RONDELLE D.8	SCHEIBE D.8	ARANDELA D.8
62	F01020440	VITE M 8X1,25X25 U5739 8.8 ZN	BOLT M8 X25 5739 8.8 ZN	VIS M8 X25 5739 8.8 ZN	SCHRAUBE M8 X25 5739 8.8 ZN	TORNILLO M8 X25 5739 8.8 ZN
63	G22230063	ELEMENTO ARTICOLATO	ARTICULATED ELEMENT	ELEMENT ARTICULE	GELENKELEMENT	ELEMENTO ARTICULADO
64	G22230062	VITE DI REGOLAZIONE	ADJUSTMENT BOLT	VIS DE REGLAGE	EINSTELLSCHRAUBE	TORNILLO DE REGULACIN S
65	G22220073	RONDELLA 28X0,3X16,5	WASHER 28X0-3X16-5	RONDELLE 28X0-3X16-5	UNTERLEGSCHEIBE 28X0-3X16-5	ARANDELA 28X0-3X16-5
66	F06220013	VOLANT.8L.PERN.M12X30-40 VPA55	8-LOBE PIN HANDWHEEL M12X30-40	VOLANT 8 LOBES PIVOT M12X30-40	HANDRAD.8L.ZAPFENM12X30-40 VPA	VOLDEL.8L.PERN.M12X30-40 VPA55
67	G14820991	FERMO REGOLAZIONE	ADJUSTMENT STOP	BUTEE REGLAGE	EINSTELLUNGSSPERRE	BLOQUEO REGULACIËN
68	G22270235	MANIGLIA REGOLAZIONE B4	ADJUSTMENT HANDLE B4	POIGNEE REGLAGE B4	EINSTELLGRIFF B4	MANIJA REGULACIN B4 M
69	F01410088	ROS.M14 15X 28X2,5 U6592 ZN	WAS.M14 15X 28X2,5 U6592 ZB	RON.M14 15X 28X2,5 U6592 ZB	SCH.M14 15X 28X2,5 U6592 ZB	ARA.M14 15X 28X2,5 U6592 ZB
70	G65336100	MOLLA SPEC.FERMO MANIGLIA SP	SPEC SPRING HANDLE STOP SP	RESSORT SPEC. ARRET POIGNEE SP	SPEZIALFEDER GRIFFSPERRE SP	MUELLE ESPEC. BLOQUEO MANIJA S

TAV. 251

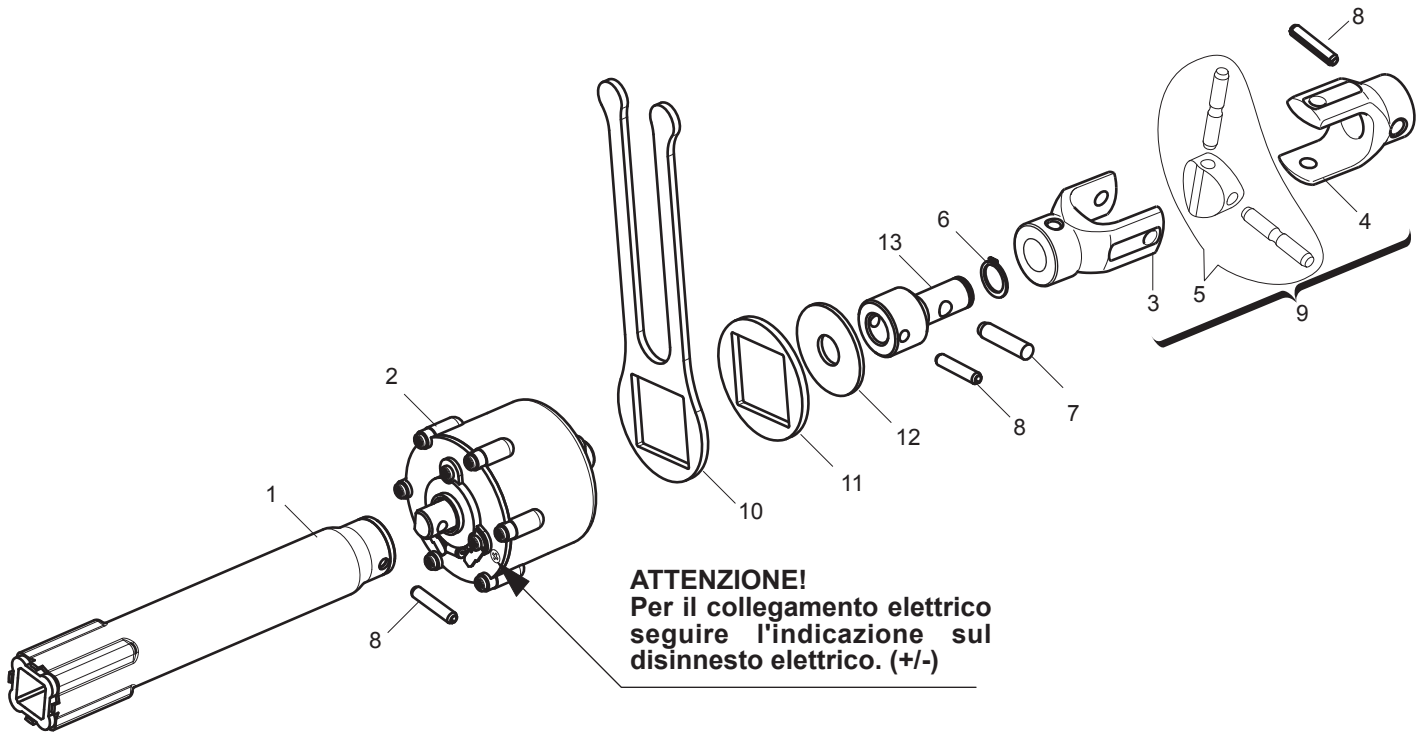

GASPARDO

ESCLUSIONE ELETTRICA FILE DI SEMINA

TAV. 251

Pos.	Cod.	Descrizione	Description	Description	Benennung	Descripcion
1	G15424011	INNESTO ESCL.ELETTRICA SP	ELECTRIC DISABLE CONNECTION SP	ACCOUPL. EXCL.+LECTRIQUE SP	STECKVORRICHT.ELEKT.AUSSCHALTU	CONECTOR DESC.EL+CTRICA SP
2	G16033701	DISINNESTO ELETTRICO 180 COMPL	COMPL. ELECTRIC RELEASE 180	D+BRAYAGE +LECTRIQUE 180 COMPL	ELEKTRISCHE ENTKUPPLUNG 180 KO	DESCONEXIËN EL+CTRICA 180 COMP
3	G19204080	FORCELLA				
4	G19204090	FORCELLA				
5	G22270454	CROCIERA COMPL. SP/S	SPIDER SP/S	CROSILLON COMPL CARDAN TRANSM	GELENKKREUZ KOMPL. SP/S	CRUCETA COMPL. SP/S
6	F02050045	ANELLO E. DE 16X 1 U7435 C70	SEEGER RING 16X 1 U7435 C70	BAGUE SEEGER 16 X 1 U7435 C70	SEEGERING 16 X 1 U7435 C70	ANILLO 16X 1 U7435 C70
7	F04150011	BOCCOLA AUTOL.40,5X30X5X33	SELF-LOCKING BUSHING 40-5X30X5	BOITE AUTOL. 40-5X30X5X33	BUCHSE SELBST. 40-5X30X5X33	CASQUILL0 AUTOL.40-5X30X5X33
8	F02100114	SPINA E.P. 6X 30 U6873 C70 BR	ELASTIC PIN 6X30	GOUJON ELASTIQUE 6X30	SPANNHUELSE 6X30	ESPINA ELASTICA 6X30
9	G15423980	FORCELLE SNODO ESCL.ELET.COMPL	FORK ELECTRIC DISABLE COMPLET	FOURCHETTE EXCL. +LECTR. COMPL	STAFEL ELEKT.AUSSCHALTU KOMPL.	HORQUILLA DESC.EL+CTRICA COMPL
10	G16033750	FERMO DISINNESTO ELETTRICO ZN	UNCOUPLING ELECTRIC STOP	ARRET DEBRAYAGE +LECT.	FESTSTELL. AUSKUPPLUNG EL.	BLOQUEO DESCONEXIN EL.
11	G16033740	DISTANZIALE DISINNESTO ELET.ZN	UNCOUPLING ELECTRIC SPACER	ENTRETOISE DEBRAYAGE +LECT.	DISTANZST_CK AUSKUPPLUNG EL.	DISTANCIADOR DESCONEXIN EL.
12	G18701970	RONDELLA 16X48X2,5	WASHER 16X48X2,5	RONDELLE 16X48X2,5	UNTERLEGSCHEIBE 16X48X2,5	ARANDELA 16X48X2,5
13	G16033730	ADATTATORE CROCIERA	SPIDER ADAPTOR	ADAPTATEUR CROISIERE	PASSST_CK GELENKKREUZ	ADAPTADOR CRUCETA

TAV. 262

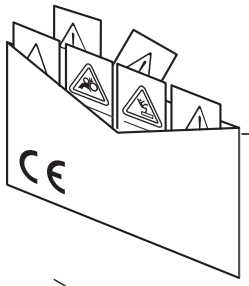

13
DECALCOMANIE AVVERTIMENTO
DECAL
DBZIEHBILD
DECALCOMANIE
CALCOMANIE
CALCOMANIE

GASPARDO
METRO
14

5
Rosso Gaspardo - 1Kg
Gaspardo red - 1Kg
Rot Gaspardo - 1Kg
Rouge Gaspardo - 1Kg
Rojo Gaspardo - 1Kg

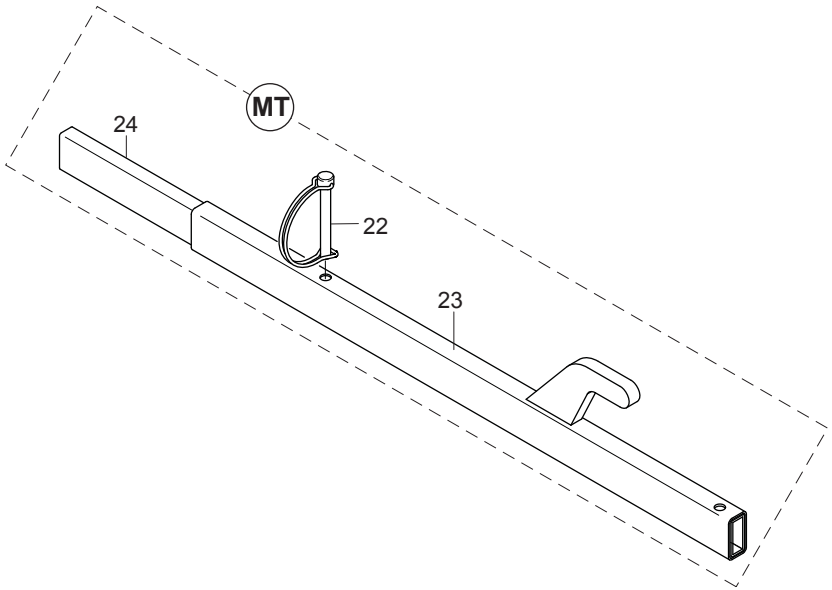

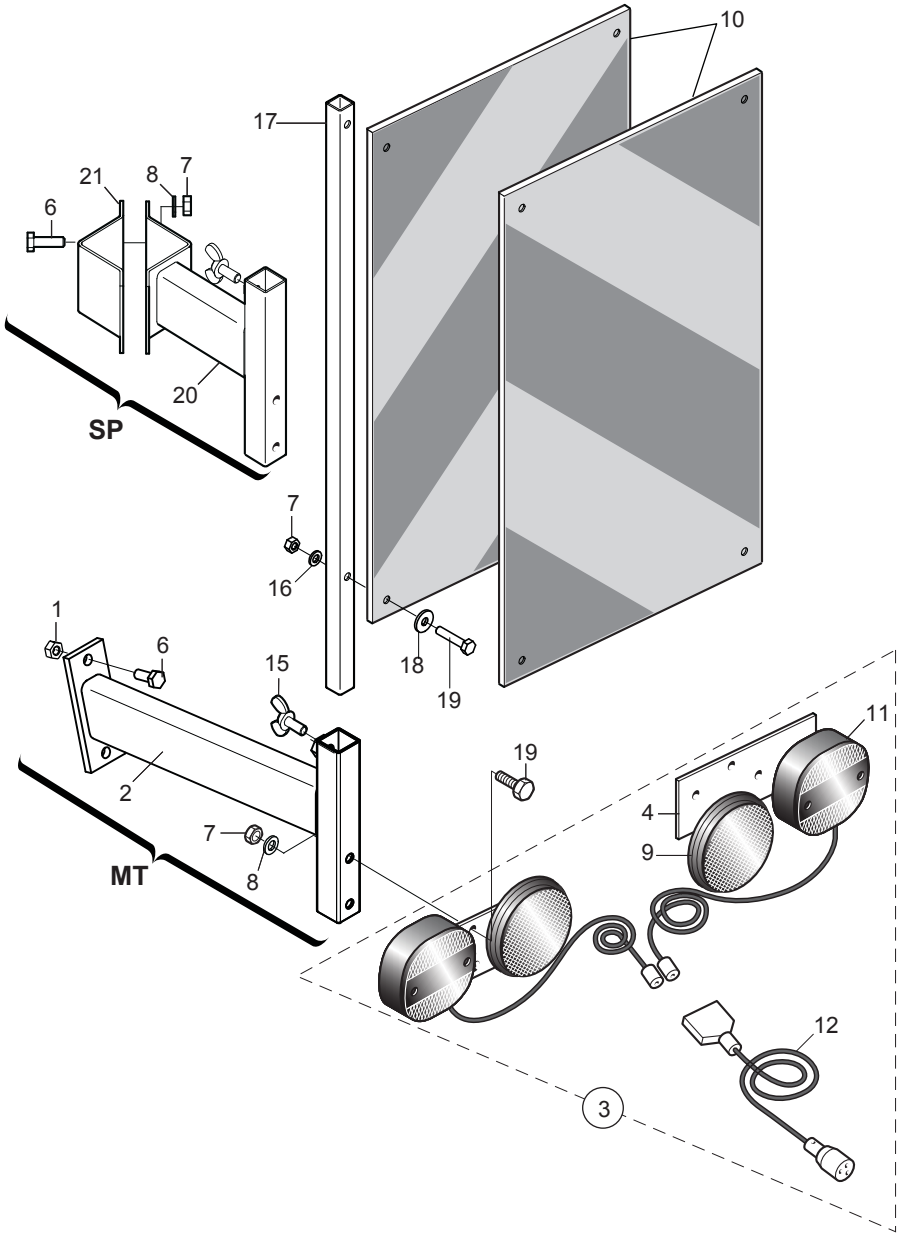

ACCESSORI

TAV. 262

Pos.	Cod.	Descrizione	Description	Description	Benennung	Descripcion
1	F01200232	DADO M 6X 1 U5588 6.8 ZN				
2	G15211760	SUPPORTO LUCI POST.	LIGHTS SUPPORT	SUPPORT ECLAIRAGE	LICHTERHALTERUNG	SOPORTE LUCES
3	G13616620	KIT LUCI PER MACCHINE PORTATE	LIGHT KIT FOR MOUNTED MACHINE	KIT FEUX POUR MACHINES PORT+ES	KIT LICHTER F_R FÍRDERMASCHINE	KIT LUCES PARA M-QUINAS SUSPEN
4	G13616570	PIASTRA SUPP.LUCI	LIGHTS SUPPORT PLATE	PLAQUE DE SUPPORT ECLAIRAGE	LICHTERHALTERUNGSPLATTE	PLACA SOPORTE LUCES
5	F03200251	ROSSO GAS.RAL3020 BICOM.LT.1,5				
6	F01020403	VITE M 6X 1X 16 U5739 8.8 ZN	BOLT M 6X16	VIS M 6X16	SCHRAUBE M 6X16	TORNILLO M 6X16
7	F01220011	DADO M 6X 1 D980 8 ZN	SELF LOCKING NUT M6	ECROU AUTOBL. M6	SELBSTSPERR.MUTTER M6	DADO AUTOBL. M6
8	F01410037	ROS.M6 6,4X12,5X1,6 U6592 ZN	PLANE WASHER D.6	RONDELLE D.6	SCHEIBE D.6	ARANDELA D.6
9	F05010221	CATARIFRANGENTE TONDO D.80 >	D.80 ROUND REFLECTOR	CATADIOPTRE ROND D.80	RUNDER R_CKSTRAHLER D.80	PAPEL REFRACTARIO REDONDO D.80
10	F05010357	N.2 PANNELLI CARICHI SPORGENTI	N.2 JUTTING LOAD PANELS	N.2 PANNEAUX CHARGES SAILLANT	N.2 TAFELN VORSPRINGENDE LADUN	2 PANELES CARGADOS SALIENTES
11	F05010076	FANALE X KIT LUCI	LAMP KIT LIGHTS COMPL.	FEU KIT ECLAIRAGE COMPL.	LAMPEN KIT LICHT KOMPL.	FAROL SET LUCES COMPL.
12	F05010080	CABLAGGIO PER KIT LUCI	LIGHT WIRING HARNESS	CABLAGE KIT PHARES	VERKABELUNG LAMPENKIT	CABLEADO JUEGO LUCES
13	G89900500	KIT DECALCOMANIE -CE-	DECAL KIT -CE-	KIT DECALCOMANIE -CE- K	IT ABZIEHB. -CE- S	ET CALCOMANAS -CE-
14	G89900511	KIT DECALCOMANIE SP-MT	DECAL KIT SP	KIT DECALCOMANIE SP	KIT ABZIEHB. SP	SET CALCOMANAS SP
15	F01090215	VITE M 8X1,25X15 U5449 5.8 ZN	BOLT 8X15 UNI 5449 5.8 GALVANI	VIS 8X15 UNI 5449 5.8 ZN	SCHRAUBE 8X15 UNI 5449 5.8 ZN	TORNILLO 8X15 UNI 5449 5.8 ZN
16	F01410037	ROS.M6 6,4X12,5X1,6 U6592 ZN	PLANE WASHER D.6	RONDELLE D.6	SCHEIBE D.6	ARANDELA D.6
17	G15412650	TUBO Q. 16X1,5X 643 ZN	GALVAN. SQUARE 16X1,5X643	TUBE CARRE 16X1,5X643 ZN	ROHR Q. 16X1,5X643 ZN	TUBO CUADRADO 16X1,5X643 ZN
18	F01420036	ROS.M6 6,4X 18X 2 U6593 ZN	FLAT WASHER 6-6X 18X2 6593 ZN	ROND. PLATE 6-6X 18X2 6593 ZN	SCHEIBE 6-6X 18X2 6593 ZN	ARAND. PLANA 6-6X 18X2 6593 ZN
19	F01020408	VITE M 6X 1X 30 U5739 8.8 ZN	BOLT M 6X1X30	VIS M 6X1X30	SCHRAUBE M 6X1X30	TORNILLO M 6X1X30
20	G15412640	SUPPORTO KIT LUCI POST.	REAR LIGHT SUPPORT KIT	SUPPORT KIT FEUX ARRI+RE	HALTERUNG KIT HINT. LICHTER	SOPORTE KIT LUCES POST.
21	G15411260	FORCELLA LUCI ZN	OPENING FORK ZN	FOURCHE FEUX ZN	LICHTERGABEL ZN	HORQUILLA LUCES ZN
22	F02200562	SPINA SICUR. D. 8X70 ZN	SPLIT PIN D.8X70 ZB	GOUPILLE D.8X70 ZB	BOLZEN D.8X70 ZB	PERNO D.8X70 ZB
23	G15225380	LEVA SOLLEVAMENTO ELEMENTO	LIFTING LEVER	LEVIER DE LEVAGE	HEBELHUB	PALANCA LEVANTAMIENTO
24	G15225370	TUBO R.35X15X1,5X750 FORATO	TUBE R.35X15X1,5X750	TUBE R.35X15X1,5X750	ROHR R.35X15X1,5X750	TUBO R.35X15X1,5X750

TAV. 270

Codice *Code* Code *Kodex* Codigo	Nr e □ fori *Nr and ø holes* Nr et □ trous *Nr und ø löcher* Nr y □ agujeros		Coltura	*Seeds*	Cultures	*Samen*	Semillas	Distanza semina Seeding dist. Dist. de semis Saatabstandes Dist. siembra
22230298	20	0,8 **(1)**						
22230319	20	1 **(1)**	Cavolo broccolo	*Broccoli*	Chou-Broccoli	*Brokkoli*	Bróculi	
22230327	20	1,1 **(1)**	Cavolo verza	*Cabbage,Savoy*	Chou de Milan	*Wirsing*	Col de Milán	
22230320	20	1,5						
22230294	20	2,1	Zucchino Melone Anguria Cardo	*Squash* *Melon* *Watermelon* -	Courgette Melon Past□que -	*Kürbis* *Melone* *Wassermelone* -	Calabacín Melón Sandía -	**min.10,4 cm.**
22230203	20	2,5	Girasole	*Sunflower*	Tournesol	*Sonnenblumen*	Girasol	
22230192	20	3,5	Cotone Mais (Piccolo)	*Cotton* *Corn (Little)*	- Mais (Petit)	*Baumwohl* *Mais (Klein)*	- Maiz (Peque□o)	**max. 41,7 cm.**
22230048	20	4,5	Mais	*Corn*	Mais	*Mais*	Maiz	
22230047	20	5,5	Mais (Grosso) Ceci Fagiolo borlotto e cannellino Arachidi	*Corn (Big)* *Pulses* *Beans* *Peanut*	Mais (Gros) - Haricot -	*Mais (Grosse)* - *Bohnen* -	Maiz (Grueso) - Poroto -	
22230205	20	7	Arachidi Lupino	*Peanut* -	- -	- -	- -	
10124030R	26	1 **(1)**						
22230253	26	1,5						
22230296	26	2,1	Zucchino Melone Anguria Cardo	*Squash* *Melon* *Watermelon* -	Courgette Melon Past□que -	*Kürbis* *Melone* *Wassermelone* -	Calabacín Melón Sandía -	**min. 8 cm.**
22230289	26	2,5	Girasole	*Sunflower*	Tournesol	*Sonnenblumen*	Girasol	
22230249	26	3,5	Cotone Mais (Piccolo)	*Cotton* *Corn (Little)*	- Mais (Petit)	*Baumwohl* *Mais (Klein)*	- Maiz (Peque□o)	
22230050	26	4,5	Mais	*Corn*	Mais	*Mais*	Maiz	**max. 32,1 cm.**
22230303	26	5						
22230049	26	5,5	Mais (Grosso) Ceci Fagiolo borlotto e cannellino Arachidi	*Corn (Big)* - *Beans* -	Mais (Gros) - Haricot -	*Mais (Grosse)* - *Bohnen* -	Maiz (Grueso) - Poroto -	
22230317	36	1,1 **(1)**	Pomodoro	*Tomato*	Tomate	*Tomate*	Tomate	
22230196	36	1,5	Lenticchia Cetriolo Pomodoro conf. □ 2,5÷3,5 mm	- *Cucumber* *Tomato pilled* *ø 2,5÷3,5 mm*	- Concombre Tomate enrob□ □ 2,5÷3,5 mm	- *Gurke* *Tomate pilliert* *ø 2,5÷3,5 mm*	- Pepino Tomate conf. □ 2,5÷3,5 mm	
22230051	36	2,1	Barbabietola Zucchino Melone Anguria Cardo Sorgo Sesamo	*Beets* *Squash* *Melon* *Watermelon* - *Sorghum* -	Betteraves Courgette Melon Past□que - Sorgo -	*Rüben* *Kürbis* *Melone* *Wassermelone* - *Hirse* -	Remolacha Calabacín Melón Sandía - Sorgo -	**min. 5,8 cm.**

Codice *Code* Code *Kodex* Codigo	Nr e □ fori *Nr and ø holes* Nr et □ trous *Nr und ø löcher* Nr y □ agujeros		Coltura	*Seeds*	Cultures	*Samen*	Semillas	Distanza semina Seeding dist. Dist. de semis Saatabstandes Dist. siembra
22230290	36	2,5	Pomodoro conf. □ 3,5÷4,5 mm Ginseng	*Tomato pilled* *ø 3,5÷4,5 mm* *Ginseng*	Tomate enrob□ □ 3,5÷4,5 mm Ginseng	*Tomate pilliert* *ø 3,5÷4,5 mm* *Ginseng*	Tomate conf. □ 3,5÷4,5 mm Ginseng	**max. 23,2 cm.**
22230197	36	3,5	Fagiolino Piselli Soia	*Beans (Little)* *Peas* *Soyabeans*	Haricot (Petit) Pois Soja	*Grüne Bohnen* *Erbsen* *Soja*	Judias verdes Arveja Soja	
22230199	36	4,5	Fagiolo Piselli Favino	*Beans* *Peas* -	Haricot Pois -	*Bohnen* *Erbsen* -	Poroto Arveja -	
22230295	36	5,5	Fagiolo	*Beans*	Haricot	*Bohnen*	Poroto	
10123760R	36	5,5 **(2)**	Fagiolo	*Beans*	Haricot	*Bohnen*	Poroto	
22230304	36	7						
22230321	52	1,5						**min. 4 cm.**
22230328	52	2,1	Barbabietola	*Beets*	Betteraves	*Rüben*	Remolacha	
22230299	52	2,5						
22230316	52	3,5	Fagiolino	*Beans (Little)*	Haricot (Petit)	*Grüne Bohnen*	Judias verdes	
22230288	52	4,25	Soia	*Soyabeans*	Soja	*Soja*	Soja	**max. 16 cm.**
22230194	72	0,5 **(1)**	Endivia Lattuga	*Endive* *Lettuce*	Chicor□e Laitue	*Winterendivien* *Kopfsalat*	Escarola Lechuga	
22230195	72	0,8 **(1)**	Endivia Lattuga Rapa Senape Finocchio Anice	*Endive* *Lettuce* *Turnip* *Mustard* *Fennel* -	Chicor□e Laitue Navet Moutarde Fenouil -	*Winterendivien* *Kopfsalat* *Speiserüben* *Senft* *Fenchel* -	Escarola Lechuga Nabo - Hinojo -	
22230193	72	1,1 **(1)**	Pomodoro Rapa Finocchio Colza Panico	*Tomato* *Turnip* *Fennel* *Canola* -	Tomate Navet Fenouil Colza -	*Tomate* *Speiserüben* *Fenchel* *Raps* -	Tomate Nabo Hinojo Colza -	**min. 2,9 cm.**
22230257	72	1,5	Spinacio Ravanello Asparagio Pomodoro conf. □ 2,5÷3,5 mm	*Spinach* *Radish* *Asparagus* *Tomato pilled* *ø 2,5÷3,5 mm*	Epinard Radis Asperge Tomate enrob□ □ 2,5÷3,5 mm	*Spinat* *Radies* *Spargel* *Tomate pilliert* *ø 2,5÷3,5 mm*	Espinaca Rabanito Espárrago Tomate conf. □ 2,5÷3,5 mm	**max. 11,6 cm.**
22230213	72	2,1	Bieta a coste Saggina	*Swiss Chard* -	Poir□e -	*Mangold* -	Acelga -	
10124040R	72	2,5						
22230198	72	3,5	Fagiolino Soia	*Beans (Little)* *Soyabeans*	Haricot (Petit) Soja	*Grüne Bohnen* *Soja*	Judias verdes Soja	
10124020R	72	4,25	Soia	*Soyabeans*	Soja	*Soja*	Soja	
22230256	72	4,5						

DISCHI DI SEMINA

TAV. 270

Pos.	Cod.	Descrizione	Description	Description	Benennung	Descripcion
1	G10121460	DISCO 96 FORI D 1,0 SP	DISK 96 HOLES D.1,0 SP	DISQUE 96 TROUS D. 1,0 SP	SCHEIBE 96 LTCHER D.1,0 SP	DISCO 96 ORIFICIOS D. 1,0 SP
2	G10123970	DISCO 102 F.D.2 SP	DISK 102 HOLES D. 2 SP	DISQUE 102 TROUS D. 2 SP	SCHEIBE 102 LTCHER D.2 SP	DISCO 102 ORIFICIOS D. 2 SP
3	G10124010	DISCO 60 FORI D.4,5 SP LM	DISK 60 HOLES D.4-5 SP LM	DISQUE 60 TROUS D. 4-5 SP LM	SCHEIBE 60 LTCHER D.4-5 SP LM	DISCO 60 ORIFICIOS D.4-5 SP LM
4	G10124020	DISCO 72 FORI D.4,25 SP LM	DISK 72 HOLES D.4-25 SP LM	DISQUE 72 TROUS D. 4-25 SP LM	SCHEIBE 72 LTCHER D.4-25 SP	DISCO 72 ORIFICIOS D.4-5 SP LM
5	G10124030	DISCO ACC. 26 FORI D 1,0 SP	STEEL DISK 26 HOLES D 1.0 SP	DISQUE ACC. 26 TROUS D 1-0 SP	SCHEIBE ZUB. 26 LTCHER D 1-0 S	DISCO AC. 26 ORIFICIOS D 1-0 S
6	G10124040	DISCO ACC. 72 FORI D 2,5 SP	DISK ST. 72 H. D 2,5	DISQUE ACIER 72 TROUS D 2,5	STAHLSCHEIBE 72 L. D 2,5	DISCO ACERO 72 ORIF. D 2,5
7	G10124050	DISCO ACC.104 FORI D 1,1 SP	STEEL DISC 104 HOLES D 1.1 SP	DISQUE ACIER 104 TROUS D 1,1	STAHLSCHEIBE 104 BOHR. D 1,1	DISCO ACC.104 AGUJEROS D 1,1
8	G10124060	DISCO 26 F. D.4	DISC 26 F. D.4	DISQUE 26 TROUS D.4	SCHEIBE 26 B. D.4	DISCO 26 AGUJEROS Ï 4
9	G10124070	DISCO 36 FORI D 1,7 SP LM	DISK 36 HOLES D.1.7 SP LM	DISQUE 36 TROUS D.1,7 SP LM	SCHEIBE 36 LTCHER D.1,7 SP LM	DISCO 36 ORIFICIOS D.1,7 SP LM
10	G10124090	DISCO 6 FORI D.4,5	DISK 6 HOLES D.4,5	DISQUE 6 TROUS D. 4,5	SCHEIBE 6 LTCHER D.4,5	DISCO 6 ORIFICIOS D.4,5
11	G10124100	DISCO 6 FORI D.3,0	DISK 6 HOLES D.3,0	DISQUE 6 TROUS D. 3,0	SCHEIBE 6 LTCHER D.3,0	DISCO 6 ORIFICIOS D.3,0
12	G22230047	DISCO 20 F. D.5,5 SP LM	DISK 20 H. D.5-5 CORN SP LM	DISQUE 20 TROUS D. 5-5 MAIS SP	SCHEIBE 20 L. D.5-5 MAIS SP LM	DISCO 20 ORIF. D.5-5 MAZ SP LD
13	G22230048	DISCO 20 F. D.4,5 SP LM	DISK 20 H. D.4-5 SUNF..SP LM	DISQUE 20 TROUS D. 4-5 TOURN.	SCHEIBE 20 L. D.4-5 SONNENBLU.	DISCO 20 ORIF. D.4-5 GIRA.SP L
14	G22230049	DISCO 26 F. D.5,5 SP LM	DISK 26 H. D.5-5 CORN SP LM	DISQUE 26 TROUS D. 5-5 MAIS SP	SCHEIBE 26 L. D.5-5 MAIS SP LM	DISCO 26 ORIF. D.5-5 MAZ SP LD
15	G22230050	DISCO 26 F. D.4,5 SP LM	DISK 26 H. D.4-5 CORN SP LM	DISQUE 26 TROUS D. 4-5 MAIS	SCHEIBE 26 L. D.4-5 MAIS	DISCO 26 ORIF. D.4-5 MAIZ SP L
16	G22230051	DISCO 36 F. D.2,1 SP LM	DISK 36 H. D.2-1 BEET.SP LM	DISQUE 36 TROUS D. 2-1 BETTES	SCHEIBE 36 L.R. D.2-1 RsBEN SP	DISCO 36 ORIF. D.2-1 REMOLACHA
17	G22230192	DISCO 20 FORI D.3,5 SP LM	DISK 20 HOLES D.3-5 SP LM	DISQUE 20 TROUS D. 3-5 SP LM	SCHEIBE 20 LTCHER D.3-5 SP LM	DISCO 20 ORIFICIOS D.3-5 SP LM
18	G22230193	DISCO 72 FORI D.1,1 SP LM	DISK 72 HOLES D.1-1 SP LM	DISQUE 72 TROUS D. 1-1 SP LM	SCHEIBE 72 LTCHER D.1-1 SP LM	DISCO 72 ORIFICIOS D.1-1 SP LM
19	G22230194	DISCO 72 FORI D.0,5 SP LM	DISK 72 HOLES D.0-5 SP LM	DISQUE 72 TROUS D. 0-5 SP LM	SCHEIBE 72 LTCHER D.0-5 SP LM	DISCO 72 ORIFICIOS D.0-5 SP LM
20	G22230195	DISCO 72 FORI D.0,8 SP LM	DISK 72 HOLES D.0-8 SP LM	DISQUE 72 TROUS D. 0-8 SP LM	SCHEIBE 72 LTCHER D.0-8 SP LM	DISCO 72 ORIFICIOS D.0-8 SP LM
21	G22230196	DISCO 36 FORI D.1,5 SP LM	DISK 36 HOLES D.1-5 SP LM	DISQUE 36 TROUS D. 1-5 SP LM	SCHEIBE 36 LTCHER D.1-5 SP LM	DISCO 36 ORIFICIOS D.1-5 SP LM
22	G22230197	DISCO 36 FORI D.3,5 SP LM	DISK 36 HOLES D.3-5 SP LM	DISQUE 36 TROUS D. 3-5 SP LM	SCHEIBE 36 LTCHER D.3-5 SP LM	DISCO 36 ORIFICIOS D.3-5 SP LM
23	G22230198	DISCO 72 FORI D.3,5 SP LM	DISK 72 HOLES D.3-5 SP LM	DISQUE 72 TROUS D. 3-5 SP LM	SCHEIBE 72 LTCHER D.3-5 SP LM	DISCO 72 ORIFICIOS D.3-5 SP LM
24	G22230199	DISCO 36 FORI D.4,5 SP LM	DISK 36 HOLES D.4-5 SP LM	DISQUE 36 TROUS D. 4-5 SP LM	SCHEIBE 36 LTCHER D.4-5 SP LM	DISCO 36 ORIFICIOS D.4-5 SP LM
25	G22230203	DISCO 20 F0RI D.2,5 SP LM	DISK 20 HOLES D.2-5 SP LM	DISQUE 20 TROUS D. 2-5 SP LM	SCHEIBE 20 LÖCHER D.2-5 SP LM	DISCO 20 ORIF. D.2-5 SP LM
26	G22230205	DISCO 20 F. D.7,0 ARAC.SP LM	DISK 20 H. D.7-0 PEAN..SP LM	DISQUE 20 TROUS D. 7-0 ARACHID	SCHEIBE 20 L. D.7-0 ERDNUSS SP	DISCO 20 ORIF. D.7-0 CACAH. SP
27	G22230213	DISCO 72 FORI D.2,1 SP LM	DISK 72 HOLES D.2-1 SP LM	DISQUE 72 TROUS D. 2-1 SP LM	SCHEIBE 72 LTCHER D.2-1 SP LM	DISCO 72 ORIFICIOS D.2-1 SP LM
28	G22230216	DISCO 144 FORI D.1,1 SP LM	DISK 144 HOLES D.1-1 SP LM	DISQUE 144 TROUS D. 1-1 SP LM	SCHEIBE 144 LTCHER D.1-1 SP LM	DISCO 144 ORIFICIOS D.1-1 SP L
29	G22230217	DISCO 36 FORI D.5,5 SP LM	DISK 36 HOLES D.5-5 SP LM	DISQUE 36 TROUS D. 5-5 SP LM	SCHEIBE 36 LTCHER D.5-5 SP LM	DISCO 36 ORIFICIOS D.5-5 SP LM
30	G22230249	DISCO 26 FORI D 3,5 SP LM	DISK 26 HOLES D 3-5 SP LM	DISQUE 26 TROUS D 3-5 SP LM	SCHEIBE 26 LTCHER D 3-5 SP LM	DISCO 26 ORIFICIOS D 3-5 SP LM
31	G22230250	DISCO 144 FORI D.2,1 SP LM	DISK 144 HOLES D.2-1 SP LM	DISQUE 144 TROUS D. 2-1 SP LM	SCHEIBE 144 LTCHER D.2-1 SP LM	DISCO 144 ORIFICIOS D.2-1 SP L
32	G22230253	DISCO 26 FORI D.1,5 SP LM	DISK 26 HOLES D.1-5 SP LM	DISQUE 26 TROUS D. 1-5 SP LM	SCHEIBE 26 LTCHER D.1-5 SP LM	DISCO 26 ORIFICIOS D.1-5 SP LM
33	G22230256	DISCO 72 FORI D.4,5 SP LM	DISK 72 HOLES D.4-5 SP LM	DISQUE 72 TROUS D. 4-5 SP LM	SCHEIBE 72 LTCHER D.4-5 SP LM	DISCO 72 ORIFICIOS D.4-5 SP LM
34	G22230257	DISCO 72 FORI D.1,5 SP LM	DISK 72 HOLES D.1-5 SP LM	DISQUE 72 TROUS D. 1-5 SP LM	SCHEIBE 72 LTCHER D.1-5 SP LM	DISCO 72 ORIFICIOS D.1-5 SP LM
35	G22230287	DISCO 144 FORI D.1,5 SP LM	DISK 144 HOLES D.1-5 SP LM	DISQUE 144 TROUS D. 1-5 SP LM	SCHEIBE 144 LTCHER D.1-5 SP LM	DISCO 144 ORIFICIOS D.1-5 SP L
36	G22230288	DISCO 52 FORI D.4,25 SP LM	DISK 52 HOLES D.4-25 SP LM	DISQUE 52 TROUS D. 4-25 SP LM	SCHEIBE 52 LTCHER D.4-25 SP LM	DISCO 52 ORIFICIOS D.4-25 SP L
37	G22230289	DISCO 26 FORI D.2,5 SP LM	DISK 26 HOLES D.2-5 SP LM	DISQUE 26 TROUS D. 2-5 SP LM	SCHEIBE 26 LTCHER D.2-5 SP LM	DISCO 26 ORIFICIOS D.2-5 SP LM
38	G22230290	DISCO 36 FORI D.2,5 SP LM	DISK 36 HOLES D.2-5 SP LM	DISQUE 36 TROUS D. 2-5 SP LM	SCHEIBE 36 LTCHER D.2-5 SP LM	DISCO 36 ORIFICIOS D.2-5 SP LM
39	G22230294	DISCO 20 FORI D.2,1 SP LM	DISK 20 HOLES D.2-1 SP LM	DISQUE 20 TROUS D. 2-1 SP LM	SCHEIBE 20 LTCHER D.2-1 SP LM	DISCO 20 ORIFICIOS D.2-1 SP LM
40	G22230296	DISCO 26 FORI D.2,1 SP LM	DISK 26 HOLES D.2-1 SP LM	DISQUE 26 TROUS D. 2-1 SP LM	SCHEIBE 26 LÖCHER D.2-1 SP LM	DISCO 26 ORIFICIOS D.2-1 SP LM
41	G22230297	DISCO 144 FORI D.0,8 SP LM	DISK 144 HOLES D.0-8 SP LM	DISQUE 144 TROUS D. 0-8 SP LM	SCHEIBE 144 LTCHER D.0-8 SP LM	DISCO 144 ORIFICIOS D.0-8 SP L
42	G22230298	DISCO 20 FORI D.0,8 SP LM	DISK 20 HOLES D.0-8 SP LM	DISQUE 20 TROUS D. 0-8 SP LM	SCHEIBE 20 LTCHER D.0-8 SP LM	DISCO 20 ORIFICIOS D.0-8 SP LM
43	G22230299	DISCO 52 FORI D.2,5 SP LM	DISK 52 HOLES D.2-5 SP LM	DISQUE 52 TROUS D. 2-5 SP LM	SCHEIBE 52 LTCHER D.2-5 SP LM	DISCO 52 ORIFICIOS D.2-5 SP LM
44	G22230300	DISCO POST.10G-3F-D2,1 SP LM	DISK POST.10G-3F-D2-1 SP LM	DISQUE ARRIERE 10G. 3 TROUS D2	HINTERSCHEIBE 10G-3L-D2-1 SP L	DISCO TRAS.10G. 3 ORIF. D2-1 S
45	G22230301	DISCO 144 FORI D.0,5 SP LM	DISK 144 HOLES D.0-5 SP LM	DISQUE 144 TROUS D. 0-5 SP LM	SCHEIBE 144 LTCHER D.0-5 SP LM	DISCO 144 ORIFICIOS D.0-5 SP L
46	G22230303	DISCO 26 FORI D.5,0 SP LM	DISK 26 HOLES D.5-0 SP LM	DISQUE 26 TROUS D. 5-0 SP LM	SCHEIBE 26 LTCHER D.5-0 SP LM	DISCO 26 ORIFICIOS D.5-0 SP LM
47	G22230304	DISCO 36 FORI D.7 LM	DISK 36 HOLES D.7 LM	DISQUE 36 TROUS D. 7 LM	SCHEIBE 36 LTCHER D.7 LM	DISCO 36 ORIFICIOS D.7 LM
48	G22230306	DISCO 12 FORI D.2,1 SP LM	DISK 12 HOLES D.2-1 SP LM	DISQUE 12 TROUS D. 2-1 SP LM	SCHEIBE 12 LTCHER D.2-1 SP LM	DISCO 12 ORIFICIOS D.2-1 SP LM
49	G22230316	DISCO 52 FORI D.3,5 SP LM	DISC 52 HOLES D.3-5 SP LM	DISQUE 52 TROUS D. 3-5 SP LM	SCHEIBE 52 LTCHER D.3-5 SP LM	DISCO 52 ORIFICIOS D.3-5 SP LM
50	G22230317	DISCO 36 FORI D.1,1 SP LM	DISK 36 HOLES D.1-1 SP LM	DISQUE 36 TROUS D. 1-1 SP LM	SCHEIBE 36 LTCHER D.1-1 SP LM	DISCO 36 ORIFICIOS D.1-1 SP LM
51	G22230318	DISCO 10 FORI D.1,5 SP LM	DISK 10 HOLES D.1-5 SP LM	DISQUE 10 TROUS D. 1-5 SP LM	SCHEIBE 10 LTCHER D.1-5 SP LM	DISCO 10 ORIFICIOS D.1-5 SP LM
52	G22230319	DISCO 20 FORI D.1,0 SP LM	DISK 20 HOLES D.1-0 SP LM	DISQUE 20 TROUS D. 1-0 SP LM	SCHEIBE 20 LTCHER D.1-0 SP LM	DISCO 20 ORIFICIOS D.1-0 SP LM
53	G22230320	DISCO 20 FORI D.1,5 SP LM	DISK 20 HOLES D.1-5 SP LM	DISQUE 20 TROUS D. 1-5 SP LM	SCHEIBE 20 LTCHER D.1-5 SP LM	DISCO 20 ORIFICIOS D.1-5 SP LM
54	G22230321	DISCO 52 FORI D.1,5 SP LM	DISK 52 HOLES D.1-5 SP LM	DISQUE 52 TROUS D. 1-5 SP LM	SCHEIBE 52 LTCHER D.1-5 SP LM	DISCO 52 ORIFICIOS D.1-5 SP LM
55	G22230322	DISCO 80 FORI D.1,5 SP LM	DISK 80 HOLES D.1-5 SP LM	DISQUE 80 TROUS D. 1-5 SP LM	SCHEIBE 80 LTCHER D.1-5 SP LM	DISCO 80 ORIFICIOS D.1-5 SP LM
56	G22230323	DISCO 100 FORI D.1,5 SP LM	DISK 100 HOLES D.1-5 SP LM	DISQUE 100 TROUS D. 1-5 SP LM	SCHEIBE 100 LTCHER D.1-5 SP LM	DISCO 100 ORIFICIOS D.1-5 SP L
57	G22230324	DISCO 120 FORI D.1,5 SP LM	DISK 120 HOLES D.1-5 SP LM	DISQUE 120 TROUS D. 1-5 SP LM	SCHEIBE 120 LTCHER D.1-5 SP LM	DISCO 120 ORIFICIOS D.1-5 SP L
58	G22230325	DISCO 160 FORI D.1,5 SP LM	DISK 160 HOLES D.1-5 SP LM	DISQUE 160 TROUS D. 1-5 SP LM	SCHEIBE 160 LTCHER D.1-5 SP LM	DISCO 160 ORIFICIOS D.1-5 SP L
59	G22230326	DISCO 180 FORI D.1,5 SP LM	DISK 180 HOLES D.1-5 SP LM	DISQUE 180 TROUS D. 1-5 SP LM	SCHEIBE 180 LTCHER D.1-5 SP LM	DISCO 180 ORIFICIOS D.1-5 SP L
60	G22230327	DISCO 20 FORI D.1,1 SP LM	DISK 20 HOLES D.1-1 SP LM	DISQUE 20 TROUS D. 1-1 SP LM	SCHEIBE 20 LTCHER D.1-1 SP LM	DISCO 20 ORIFICIOS D.1-1 SP LM
61	G22230328	DISCO 52 FORI D.2,1 SP LM	DISK 2 HOLES D.2-1 SP LM	DISQUE 52 TROUS D. 2-1 SP LM	SCHEIBE 52 LTCHER D.2-1 SP LM	DISCO 52 ORIFICIOS D.2-1 SP LM
62	G22230332	DISCO 13 FORI D.3,5 SP LM	DISK 13 HOLES D.3.5 SP LM	DISQUE 13 TROUS D.3-5 SP LM	SCHEIBE 13 LTCHER D.3-5 SP LM	DISCO 13 ORIFICIOS D.3-5 SP

USATE SEMPRE RICAMBI ORIGINALI
ALWAYS USE ORIGINAL SPARE PARTS
IMMER DIE ORIGINAL-ERSATZTEILE VERWENDEN
*EMPLOYEZ TOUJOURS LES PIECES DE RECHANGE ORI*GINALES
UTILIZAR SIEMPRE REPUESTOS ORIGINALES

GASPARDO

Servizio Assistenza Tecnica - After Sales Service
Servizio Ricambi - Spare Parts Service
+39 0434 695410

Agip

DEALER:

G19530912

G19530912

MASCHIO GASPARDO

MASCHIO GASPARDO SpA
Sede legale e stabilimento produttivo
Via Marcello, 73 - 35011 Campodarsego (Padova) - Italy
Tel. +39 049 9289810
Fax +39 049 9289900
Email: info@maschio.com
www.maschionet.com

MASCHIO DEUTSCHLAND GMBH
Äußere Nürmberger Straße 5
D - 91177 Thalmässing
Deutschland
Tel. +49 (0) 9173 79000
Fax +49 (0) 9173 790079

MASCHIO FRANCE Sarl
1, Rue de Mérignan ZA
F - 45240 La Ferte St. Aubin
France
Tel. +33 (0) 2.38.64.12.12
Fax +33 (0) 2.38.64.66.79

MASCHIO IBERICA S.L.
Calle Cabernet, 10
Poligono Industrial Clot de Moja
Olerdola - 08734 Barcelona
Tel. +34 93.81.99.058
Fax +34 93.81.99.059

MASCHIO-GASPARDO USA Inc
120 North Scott Park Road
Eldridge, IA 52748 - USA
Ph. +1 563 2859937
Fax +1 563 2859938
e-mail: info@maschio.us

MASCHIO GASPARDO SpA
Stabilimento produttivo
Via Mussons, 7 - 33075
Morsano al Tagliamento (PN) - Italy
Tel. +39 0434 695410
Fax +39 0434 695425
Email: info@gaspardo.it

000 МАСКИО-ГАСПАРДО РУССИЯ
Улица Пушкина, 117 Б
404126 Волжский
Волгоградская область
Тел. +7 8443 525065
факс. +7 8443 525064

MASCHIO-GASPARDO ROMANIA S.R.L.
Strada Înfrátirii, F.N.
315100 Chisineu-Cris (Arad) -România
Tel. +40 257 307030
Fax +40 257 307040
e-mail: maschio@maschio.ro

MASCHIO MIDDLE EAST
P.O. Box 922388
Amman, 11192 Jordan
Tel. 962 605511384
Fax 962 6 5538398
e-mail: tahaeng@nets.com.jo

GASPARDO-MASCHIO TURCHIA
MASCHIO-GASPARDO CANADA Inc
MASCHIO-GASPARDO CINA
MASCHIO-GASPARDO POLAND
MASCHIO-GASPARDO UCRAINA
GASPARDO BIELORUSSIA
MASCHIO-GASPARDO KOREA