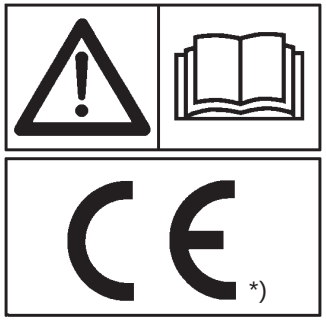


# GASPARDO

## MASCHIO GASPARDO S.p.A.

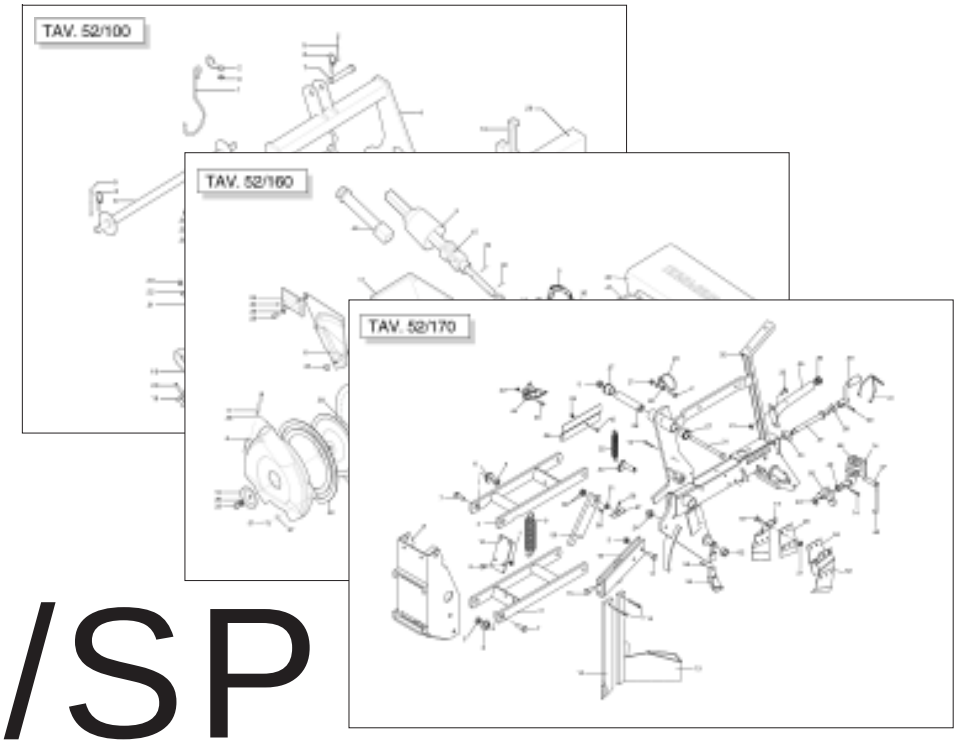


# METRO MT/SP

**Cod: G19530911 12.2007**

*) Valido per Paesi UE
*) Valid for EU member countries
*) Valable dans les Pays UE
*) Gilt für EU-Mitgliedsländer
*) Válido para Países UE

**IT** PARTI DI RICAMBIO
**EN** *SPARE PARTS*
**DE** ERSATZTEILE
**FR** *PIECES DÉTACHÉES*
**ES** PIEZAS DE REPUESTO

ITALIANO

## PARTI DI RICAMBIO

Le ordinazioni delle parti di ricambio vanno fatte presso i nostri concessionari di zona e devono essere sempre corredate dalle seguenti indicazioni:

- **Tipo, modello e numero di matricola dell'attrezzatura.** Tali dati sono stampigliati nell'apposita targhetta di cui è dotata ogni attrezzatura.

- **Numero di codice della parte richiesta** rilevabile dal catalogo ricambi.

- **Descrizione del particolare e quantità richiesta.**

- **Numero della tavola.**

- **Mezzo di trasporto.** Nel caso questa voce non sia specificata, la Ditta Costruttrice, pur dedicando a questo servizio una particolare cura, non risponde di eventuali ritardi di spedizione dovuti a cause di forza maggiore.
Le spese di trasporto si intendono sempre a carico del destinatario. La merce viaggia a rischio e pericolo del committente anche se venduta franco destino.

**NOTA:** Il termine (**Dx**) **Destro** o (**Sx**) **Sinistro** della macchina o di parti di essa, è inteso guardando la macchina dalla parte posteriore. Le eccezioni saranno indicate.

ENGLISH

## *SPARE PARTS*

*Orders must be transmitted through our area dealers and should always include the following indications:*

- ***Type, model and serial number of the machine.*** *These data are punched on the data plate with which every implement is equipped.*

- ***Code number of the required spare part.*** *This will be found in the spare parts catalogue.*

- ***Description of the part and required quantity.***

- ***Table number.***

- ***Means of dispatch.*** *If this item is not indicated, the Manufacturer, while dedicating particular care to this service, shall not be held responsible for delays in delivery caused by cases of force majeure.*
*Transport expenses shall always be at the consignee's charge. The goods travel at the purchaser's risk and peril even when sold ex destination.*

***NOTE:*** *The symbols* ***(Dx) right*** *and* ***(Sx) left****, concerning the machine or single parts of it, are referred, as in the figure, to a rear view of them. Exceptions will be indicated.*

DEUTSCH

## ERSATZTEILE

Die Bestellungen müssen bei unseren Gebietshändrer aufgegeben werden. Bei der Bestellung sind stets die folgenden Angaben zu machen:

- **Typ, Modell und Serien-Nummer des Geräts**. Diese Daten stehen auf dem Typenschild, mit dem jedes Gerät versehen ist.

- **Artikel Nr. der erforderlichen Ersatzteile.** Diese stehen im Ersatzteil-Katalog.

- **Beschreibung des Ersatzteils und die erforderliche Stückzahl.**

- **Tafelnummer.**

- **Versandmittel.** Wenn dieser Punkt nicht spezifiziert wird, haftet die Herstellerfirma nicht für etwaigen Lieferverzug aufgrund höherer Gewalt, auch wenn er diesen Service besonders aufmerksam abwickelt.
Die Frachtkosten gehen dagegen immer zu Lasten des Empfängers. Die Ware reist auf Gefahr und Risiko des Auftraggebers, auch wenn frei Haus Verkauft vereinbart worden ist.

**N.B.:** Die Merkzeichen (**Dx**) **rechts** und (**Sx**) **links** betreffen eine rückwärtige Aussicht der Maschine oder Teile von ihr (siehe Bild). Ausnahmen werden gezeigt.

FRANÇAIS

## *PIECES DÈTACHÈES*

*Les ordres doivent être effectués auprés de nos concessionaires de zone en précisant les indications suivantes:*

- ***Type, modéle et numéro de série de la machine****. Ces données sont gravées sur la plaque d'identification de chaque outil.*

- ***Numéro de code de la piéce détachée*** *indiqué sur le catalogue des piéces détachées.*

- ***Description de la piéce et quantité requise****.*

- ***Numéro de plan****.*

- ***Moyen d'expédition****. Si cette rubrique n'est pas indiquée, le Constructeur, bien que soucieux de ce service, ne répond pas des retards d'expédition pour des causes de force majeure.*
*Les frais de transport sont toujours à la charge du destinataire. La marchandise voyage aux risques et périls de l'acheteur même si vendue franco de port.*

***N.B.:*** *Les références* ***(Dx) droit*** *et* ***(Sx) gauche*** *de la machine ou des parties de la même, est entendue, comme de la figure, en regardant la machine de derriere dans le sens de marche.*

ESPAÑOL

## RESPUESTOS

Los pedidos han de efectuarse en nuestros consesionarios de zona y deben incluir siempre las siguientes indicaciones:

- **Tipo, modelo y número de matrícula del equipo**. Dichos datos están impresos en la relativa placa presente en el equipo.

- **Número de código de la parte requerida** presente en el catálogo respuestos.

- **Descripcíon de la pieza y cantidad requerida**.

- **Numero de illustración**.

- **Medio de transporte**. En caso que este ítem no esté especificado, el Fabricante, aún prestando la debidas consideraciones para este aspecto, no responde por eventuales retardos de env'o debidos a causas de fuerza mayor.
Los gastos de transporte se consideran siempre a cargo del destinatario. La mercandería viaja bajo riesgo y peligro del comprador, incluso cuando se vende franco destino.

**N.B.**: La refencia (**Dx**) **derecha** o (**Sx**) **izquierda** de la máquina o de sus componentes, se entiende, como en la figura, mirando la máquina por la parte trasera. Se indicarán las excepciones.

| *N° Tavola* | *Descrizione* | *Pagina* |
|---|---|---|
| TAV. 011 | Telaio e attacco 3 punti | 4 |
| TAV. 021 | Distributore aria | 6 |
| TAV. 031 | Trasmissione cambio | 8 |
| TAV. 041 | Ruote di trasmissione | 12 |
| TAV. 051 | Ruote di trasmissione anteriori | 14 |
| TAV. 061 | Supporti serbatoio spandiconcime | 16 |
| TAV. 070 | Serbatoio spandiconcime | 18 |
| TAV. 081 | Elementi di concimazione | 22 |
| TAV. 090 | Speedy set | 24 |
| TAV. 100 | Trasmissione spandiconcime | 26 |
| **ELEMENTO SEMINATORE TIPO** | **“MT”** | |
| TAV. 120 | Distributore semi | 28 |
| TAV. 111 | Scatola di rinvio elemento | 30 |
| TAV. 131 | Telaio elemeto | 32 |
| TAV. 141 | Ruote di profondità di compressione | 34 |
| TAV. 150 | Coprisemi anteriori e posteriori per ruote a “V” | 38 |
| TAV. 160 | Ruota compressione farmflex Ø 370 (con copriseme anteriore) | 40 |
| TAV. 171 | Coltro a disco striato | 42 |
| TAV. 181 | Esclusione elettrica file di semina | 44 |
| **ELEMENTO SEMINATORE TIPO** | **“SP”** | |
| TAV. 200 | Distributore semi | 46 |
| TAV. 191 | Scatola rinvio elemento | 50 |
| TAV. 211 | Telaio elemento | 52 |
| TAV. 221 | Elementi assolcatori | 54 |
| TAV. 231 | Ruote di compressione | 56 |
| TAV. 241 | Bilanciere | 58 |
| TAV. 251 | Esclusione elettrica file di semina | 62 |
| TAV. 261 | Accessori | 64 |
| TAV. 270 | Dischi di semina | 66 |
| TAV. 280 | Cardani | 68 |

TAV. 11

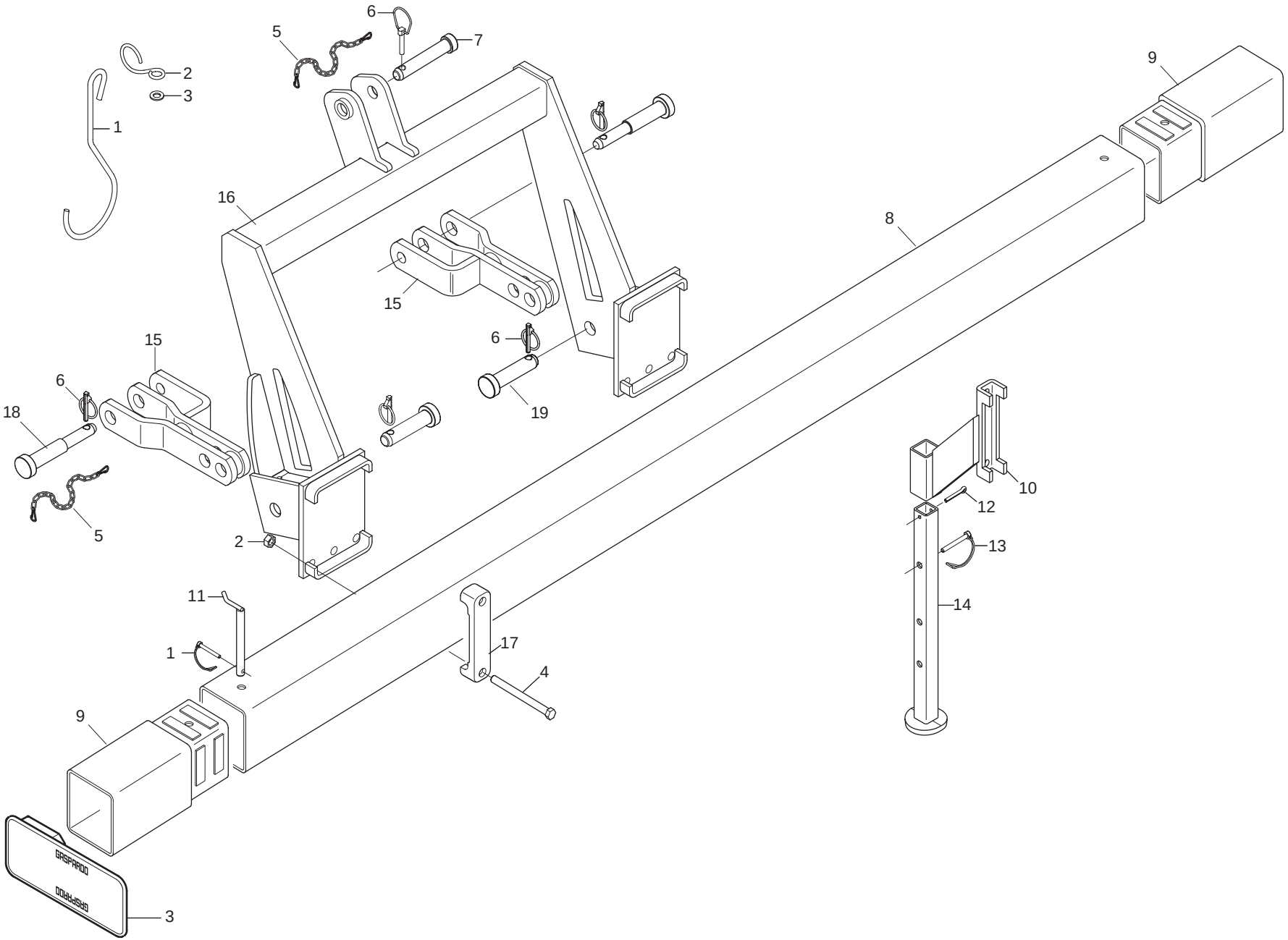




GASPARDO

cod. G19530911

## *TELAIO E ATTACCO 3 PUNTI*

TAV. 11

| Pos. | Cod. | Descrizione | Description | Description | Benennung | Descripcion |
|---|---|---|---|---|---|---|
| 1 | F02100312 | SPINA DI SICUREZZA D.8X45 ZN | SAFETY PIN D.8X45 ZN | GOUPILLE DE SECURITE D.8X45 ZN | SCHERSTIFT D.8X45 ZN | PASADOR DE SEGURIDAD D 8X45 ZN |
| 2 | F01200306 | DADO M14X 2 U5588 6.8 ZN | NUT M14X2 | ECROU M14X2 | MUTTER M14X2 | DADO M14X2 |
| 3 | G19003000 | TAPPO PER TELAIO 150 | CAP FOR FRAME 150 | BOUCHON POUR BATI 150 | PFROPFEN FOR RAHMEN 150 | TAPON PARA BASTIDOR 150 |
| 4 | F01020233 | VITE M14X 2X200 U5737 8.8 BR | SCREW M14X 2X200 U5737 8.8 ZB | VIS M14X2X 200 U5737 8.8 ZB | SCHRAUBE M14X 2X200 U5737 8.8 | TORNILLO M14X2X200 5737 8.8 ZB |
| 5 | G13812311 | CATENELLA CON MOSCHETTONE | CHAIN WITH SPRING CATCH | CHAINETTE AVEC MOUSQUETON | KETTE MIT KARABINERHAKEN | CADENA CON GANCHO |
| 6 | F02200507 | SPINA SCATTO D. 9 B/83 ZN | SNAP PIN D 9 B/83 | FICHE A DETENTE D 9 B/83 | EINRASTSTIFT D 9 B/83 | CLAVIJA DE MUELLE D 9 B/83 |
| 7 | F20100062 | SPINA GASPARDO 25X128 ZN | FOR 3RD POINT | GOUJON 3EME POINT | BOLZEN 3. PUNKT | PERNO 3 PUNTO |
| 8 | G15212940 | TUBO Q.150X 8X5200 | | | | |
| 9 | G15212930 | ASS.PROLUNGA TELAIO L.290 | | | | |
| 10 | G15112711 | SUPPORTO PUNTELLO | PROP SUPPORT | SUPPORT ETRESILLON | STsTZLAGER | STsTZLAGER |
| 11 | G15212160 | ASS.PERNO BLOCCAGGIO RUOTA | | | | |
| 12 | F02200246 | COPIGLIA 6X 45 U1336 ZN | SPLIT PIN 6 X45 1336 GALVAN. | GOUPILLE 6 X45 1336 ZN | SPLINT 6 X45 1336 ZN | PASADOR 6 X45 1336 ZN |
| 13 | F02200584 | SPINA SICUR. D. 12X70 ZN | GALVAN. SAFETY PIN D.12X70 | GOUPILLE DE S+CURIT+ D.12X70 Z | SCHERSTIFT D.12X70 ZN | PASADOR DE SEGURIDAD D 12X70 Z |
| 14 | G15112691 | PUNTELLO ST250 | PROP ST250 | ETRESILLON ST250 | STsTZE ST250 | PUNTAL ST250 |
| 15 | G15113070 | FORCELLA 1-2 PUNTO 2 CAT. | FORK 1-2 POINT 2 CAT. | FOURCHETTE 1-2 PUNTO 2 CAT. | GABEL 1-2 PUNKT 2 KAT. | HORQUILLA 1-2 PUNTO 2 CAT. |
| 16 | G15211770 | TERZO PUNTO RINF.150 | THIRD POINT REINFORCEMENT 150 | TROISIEME POINT RENFORCE | DRITTER PUNKT VERSTZRKT | TERCER PUNTO REF. |
| 17 | G19204030 | SCONTRO FISS.150 2F D15 | | | | |
| 18 | G15113090 | SPINA 1-2 PUNTO ZN | PIN 1.-2. POINT | BROCHE 1-2. POINT | STIFT 1-2. PUNKT | CLAVIJA 1-2. PUNTO |
| 19 | F20100078 | PERNO D28 L93 C40 ZN | PIN D.28 | GOUJON D.28 | BOLZEN D.28 | PERNO D.28 |

TAV. 21

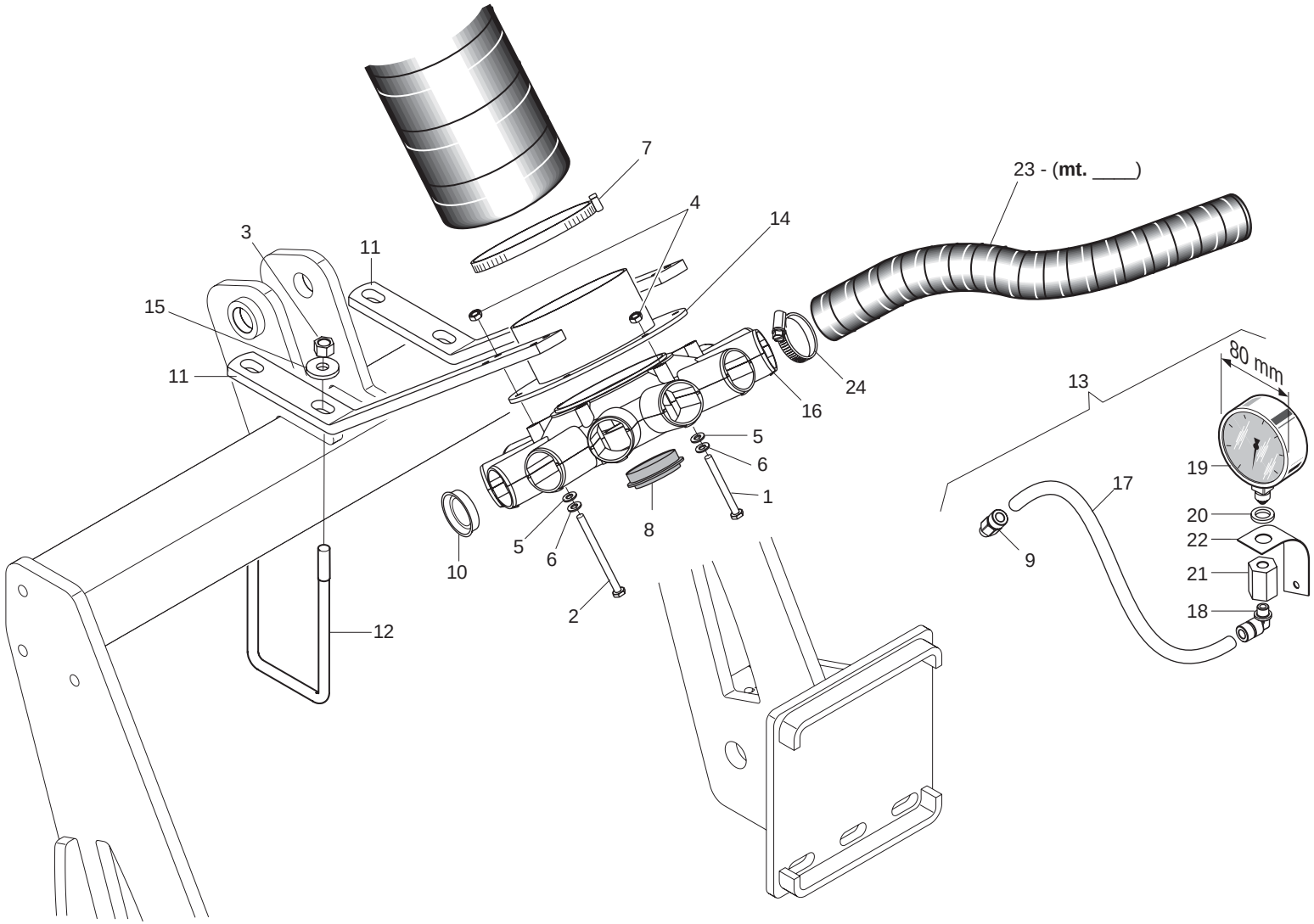




GASPARDO

## *DISTRIBUTORE ARIA*

TAV. 21

| Pos. | Cod. | Descrizione | Description | Description | Benennung | Descripcion |
|---|---|---|---|---|---|---|
| 1 | F01020048 | VITE M 6X 1X 75 U5737 8.8 ZN | BOLT 6 X75 5737 8.G GALVANIZ. | VIS 6 X75 5737 8.G ZN | SCHRAUBE 6 X75 5737 8.G ZN | TORNILLO 6x75 5737 8.G ZN |
| 2 | F01020051 | VITE M 6X 1X 90 U5737 8.8 ZN | BOLT 6X90 5737 8.G GALVANIZED | VIS 9X90 5737 8.G ZN | SCHRAUBE 6X90 5737 8.G ZN | TORNILLO 6X90 5737 8.G ZN |
| 3 | F01200306 | DADO M14X 2 U5588 6.8 ZN | NUT M14X2 | ECROU M14X2 | MUTTER M14X2 | DADO M14X2 |
| 4 | F01220011 | DADO M 6X 1 D980 8 ZN | SELF LOCKING NUT M6 | ECROU AUTOBL. M6 | SELBSTSPERR.MUTTER M6 | DADO AUTOBL. M6 |
| 5 | F01420036 | ROS.M6 6,4X 18X 2 U6593 ZN | FLAT WASHER 6-6X 18X2 6593 ZN | ROND. PLATE 6-6X 18X2 6593 ZN | SCHEIBE 6-6X 18X2 6593 ZN | ARAND. PLANA 6-6X 18X2 6593 ZN |
| 6 | F01430047 | ROS.M6 6,4X 11X0,7 U8842J ZN | WASHER D6 DIN 6798 D.INT.GALV. | RONDELLE D6 DIN 6798 D. INT. Z | UNT. SCHEIBE D6 DIN 6798 D. IN | ARANDELA D6 DIN 6798 D.INT.ZN |
| 7 | F02300031 | FASCETTA STRING.130/150 H.12 | | | | |
| 8 | F03150722 | TAPPO 700 M52X2 | M52 X 2 PLUG | BOUCHON M52 X 2 | PFROPFEN M52 X 2 | TAPN M52 X 2 D |
| 9 | F03151206 | RACCORDO DIR. C1 1/8' 6/8 | UNION STRAIGHT C1 1/8'' 6/8 | RACCORD DRT. C1 1/8'' 6/8 | ANSCHLUSSTsCK GERADE C1 1/8'' | UNIN DER. C1 1/8'' 6/8 R |
| 10 | F05050020 | TAPPO SALVAFILETTO D.39 | CONVEYOR PLUG D.39 | BOUCHON PROTEGE-FILET D. 39 | GEWINDESCHUTZPFROPFEN D.39 | TAPN GUARDARROSCA D.39 D |
| 11 | G15250140 | SUPPORTO | | | | |
| 12 | F20110770 | CAV.Q.M14X 2X 50 96X119 ZN | U-BOLT M14X96 - 119 ZN | CAVALIER M14X96 - 119 ZN | VERBINDUNG M14X96 - 119 ZN | PERNO EN U M14X96 - 119 ZN |
| 13 | G22270093 | VACUOMETRO COMPL. SP LM | VACUUM METER ASSY. SP LM | VACUOMETRE COMPL. SP LM | KOMPL. VAKUUMMETER SP LM | VACUMETRO COMPL. SP LM V |
| 14 | G15250130 | ASS.FLANGIA | | | | |
| 15 | G20970142 | RONDELLA 32X4X15,5 | WASHER 32X4X15-5 | RONDELLE 32X4X15-5 | UNTERLEGSCHEIBE 32X4X15-5 | ARANDELA 32X4X15-5 |
| 16 | G19004480 | CONVOGLIATORE 12 USCITE | CONVEYOR 12 OUTLETS | CONVOYEUR 12 SORTIES | TRICHTER MIT 12 AUSG-NGEN | TRANSPORTADOR 12 SALIDAS |
| 17 | F03100391 | TUBO POLIURETANO 8-6 | | | | |
| 18 | F03151200 | RACCORDO 90° C5 1/8' 6/8 | UNION 90[ C5 1/8'' 6/8 | RACCORD 90[ C5 1/8'' 6/8 | ANSCHLUSSTsCK 90[ C5 1/8' 6/8 | UNIN 90 C5 1/8'' 6/8 RA |
| 19 | F03151288 | VACUOM.0-100 MBAR C.SM.INC.D80 | | | | |
| 20 | F05150479 | ROND.APPOGGIO MANOMETRI SV | PRESSURE GAUGE REST WASHER | ROND. LOGEMENT MANOMETRES SV | STsTZSCHEIBE MANOMETER SV | ARAND. SOPORTE MANOMETROS SV |
| 21 | G22250274 | COLLEGAMENTO MANOMETRI SP-SV | PRESSURE GAUGE CONNECT. SP-SV | RACCORD MANOMETRES SP-SV | VERBINDUNG MANOMETER SP-SV | CONEXIN MANMETROS SP-SV LE |
| 22 | G22270134 | SUPPORTO VACUOMETRO SP | VACUUM METER SUPPORT SP | SUPPORT VACUOMETRE SP | HALTERUNG VAKUUMMETER SP | SOPORTE VACUMETRO SP S |
| 23 | F03100506 | TUBO EOLO 45 NL1 | EOLO PIPE 45 PU | | | |
| 24 | F05150058 | FASCETTA POLYAM.7,8X550 31920 | POLYAMIDE FASTENING STRAPS 9X5 | COLLIER POLYAMIDE 9X508 31920 | SCHELLE POLYAMID 9X508 31920 | ABRAZADERA POLIAMIDA 9X508 319 |

# TAV. 31

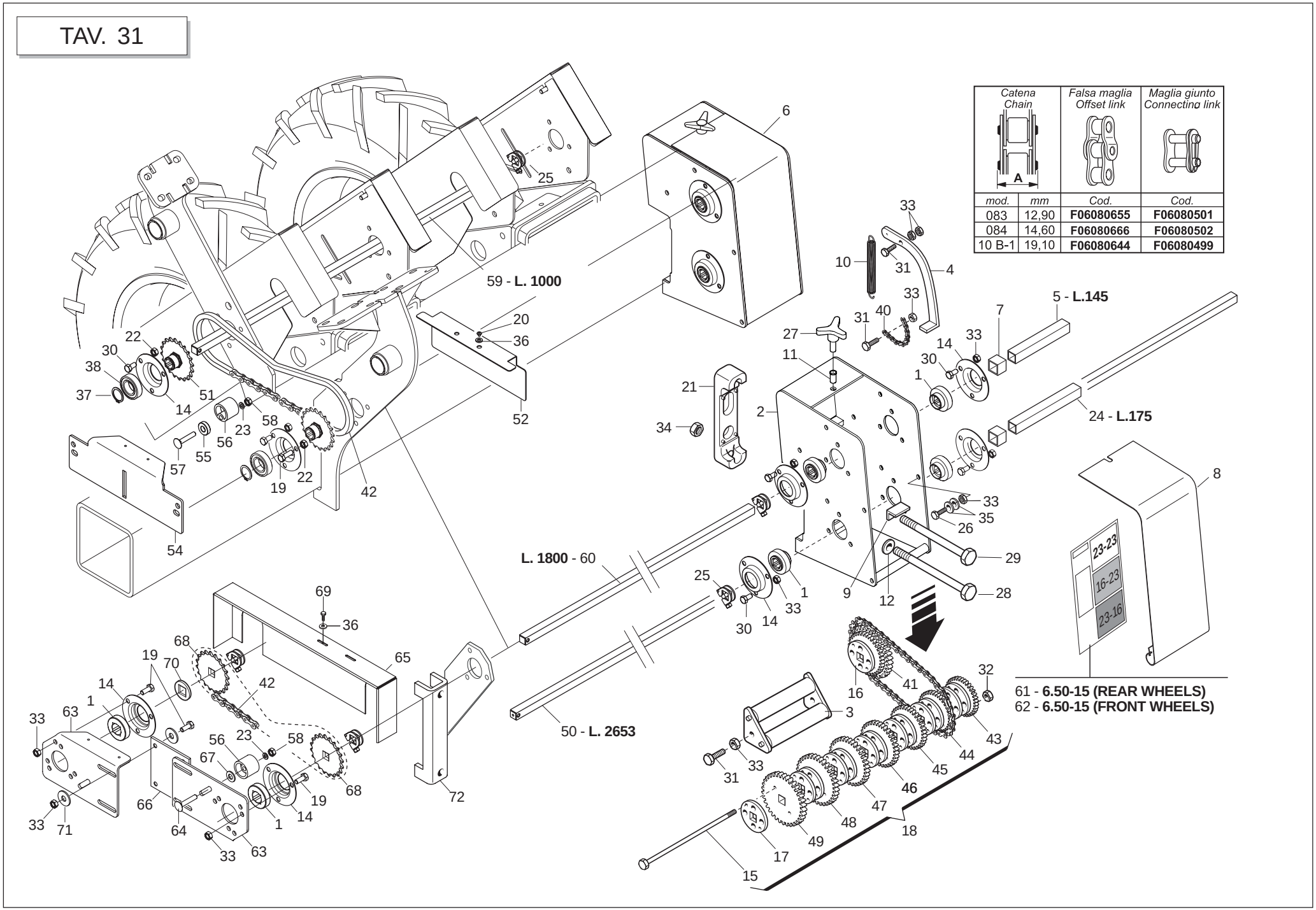


| Catena Chain | | Falsa maglia Offset link | Maglia giunto Connecting link |
|---|---|---|---|
| mod. | mm | Cod. | Cod. |
| 083 | 12,90 | **F06080655** | **F06080501** |
| 084 | 14,60 | **F06080666** | **F06080502** |
| 10 B-1 | 19,10 | **F06080644** | **F06080499** |



GASPARDO

## *TRASMISSIONE CAMBIO*

TAV. 31

| Pos. | Cod. | Descrizione | Description | Description | Benennung | Descripcion |
|---|---|---|---|---|---|---|
| 1 | G14830390 | CUSCINETTO FORO QUADRO | SQUARE-HOLED BEARING | ROULEMENT AL+SAGE CARR+ | VIERKANTLAGER | COJINETE ORIFICIO CUADRADO |
| 2 | G16630840 | ASS.SCATOLA CAMBIO Q.150 | | | | |
| 3 | G15430321 | RULLO TENDICATENA | CHAIN STRETCHER ROLLER | ROULEAU TENDEUR DE CHAINE | KETTENSPANNROLLE | RODILLO TENSOR DE CADENA |
| 4 | G15430331 | LEVA CAMBIO | GEAR LEVER | LEVIER BOITE DE VITESSE | GETRIEBEHEBEL | PALANCA DE CAMBIO |
| 5 | G15430340 | ASSE INGRANAGGI L.155 | GEAR SPINDLE L.155 | AXE ENGRENAGES L155 | ACHSE ZAHNRZDER L.122 | EJE ENGRANAJES L.155 |
| 6 | G16630010 | SCATOLA CAMBIO Q.150 COMPL. | GEARBOX 150 | BOITE DE VITESSE 150 | GETRIEBEKASTEN 150 | CAJA DE CAMBIO DE VELOCIDAD 15 |
| 7 | G15430501 | DISTANZIALE INTERNO CAMBIO | GEARBOX INNER SPACER | ENTRETOISE INT. BOITE VITESSE | INNERES DISTANZSTsCK GETRIEBE | DISTANCIADOR INTERIOR CAMBIO |
| 8 | G15430711 | COPERCHIO CAMBIO | GEAR COVER | COUVERCLE BOITE DE VITESSE | GETRIEBEDECKEL | TAPA CAMBIO |
| 9 | G15431020 | FERMO VITE CAMBIO | GEAR SCREW STOP | ARRET VIS BOITE DE VITESSE | FESTSTELLVORRICH. GETRIEBESCHR | BLOQUEO TORNILLO |
| 10 | G18902970 | MOLLA TRAZ.CAMBIO ZN SP | GALVAN. GEAR TRACT. SPRING SP | RESS. TRACT. BOITE VITESSE ZN | ZUGFEDER GETRIEBE ZN SP | MUELLE TRAC. CAMBIO ZN SP |
| 11 | F02250683 | INSERTO FIL.M 8X17,5 ZN T.TOND | CYLINDRICAL NUT 8 TC 40 | ECROU CYLINDRIQUE 8 TC 40 | ZYLINDRISCHE MUTTER 8 TC 40 | TUERCA CILINDRICA 8 TC 40 |
| 12 | G20970142 | RONDELLA 32X4X15,5 | WASHER 32X4X15-5 | RONDELLE 32X4X15-5 | UNTERLEGSCHEIBE 32X4X15-5 | ARANDELA 32X4X15-5 |
| 13 | G22220085 | SNODO | ARTICULATION | ARTICULATION | GELENK | ARTICULACIN A |
| 14 | G22230094 | SUPPORTO CUSCINETTO | BEARING SUPPORT | SUPPORT PALIER | LAGERBsCHSE | SOPORTE COJINETE |
| 15 | G19203260 | VITE M5X115 ZN | BOLT M5X115 ZN | VIS M5X115 ZN | SCHRAUBE M5X115 ZN | TORNILLO M5X115 ZN |
| 16 | G22270152 | ING.Z 16-23 RUOTA-CAMBIO SP | WHEEL- GEARBOX GEARS SP | ENGR. Z 16-23 ROUE BOITE VIT. | ZAHNRAD Z 16-23 GETRIEBERAD SP | ENGRAN. Z 16-23 RUEDA-CAMBIO |
| 17 | G22270162 | RINFORZO INGR.ASSE DA 20 SP | AXLE GEAR REINFORCEMENT 20 SP | RENFORC. ENGREN. AXE DE 20 SP | VERSTZRKUNG ACHSZAHNRAD 20 SP | REFUERZO ENGRAN. EJE DE 20 SP |
| 18 | G22270163 | BLOCCO CAMBIO ASSE DA 20 SP | 20 CM SPINDLE GEARBOX SP | ENSEMBLE BOITE DE VITESSE | GETRIEBEBLOCK ACHSE 20 SP | BLOQUE CAMBIO EJE DE 20 SP |
| 19 | F01020436 | VITE M 8X1,25X 20 U5739 8.8 ZN | BOLT M 8X20 | VIS M 8X20 | SCHRAUBE M 8X20 | TORNILLO M 8X20 |
| 20 | F01070078 | VIT.A.4,2X1,41X 9,5 6950 4.8ZN | SELFTHREADING BOLT 4,2X13 TE | VIS AUTOTARADEUSE.4-2X13 TE | SELBSTSCHNEID. SCHRAUBE 4-2X13 | TORNILLO AUTOR.4-2X13 TE |
| 21 | G19204030 | SCONTRO FISS.150 2F D15 | | | | |
| 22 | F01220022 | DADO M 8X1,25 D980 8 ZN | SELF LOCKING NUT M8X1,25 980V | ECROU AUTOBL. M8X1,25 980-V | SELBSTSP.MUTT. M8X1,25 980-V | DADO AUTOBL. M8X1,25 980-V |
| 23 | F01420048 | ROS.M8 8,4X 24X 2 U6593 ZN | PLANE WASHER D.8 | RONDELLE D.8 | SCHEIBE D.8 | ARANDELA D.8 |
| 24 | G22500171 | MANICOTTO L.175 | SLEEVE L.175 | MANCHON L.175 | MUFFE L.175 | MANGUITO L.175 |
| 25 | G22505085 | FERMO ASSE IN LAMIERA | PLATE AXLE STOP | ARRET AXE EN TOLE | FESTSTELLVORRICHTUNG BLECHACHS | BLOQUEO EJE DE CHAPA |
| 26 | F01060040 | BUL.M 8X1,25X 20 U5732 4.6 ZG | BOLT 8 X20 5732 4.6 GALVANIZED | VIS 8 X20 5732 4.6 ZN | SCHRAUBE 8 X20 5732 4.6 ZN | TORNILLO 8 X20 5732 4.6 ZN |
| 27 | F06220018 | VOLANTINO 3LOBI D.65-M8X15 | 3-LOBE HANDWHEEL D.65-M8X15 | VOLANT 3 LOBES D.65-M8X15 | HANDRAD 3 BUCKEL D.65-M8X15 | VOLANTE 3 LOBI D.65-M8X15 |
| 28 | F01020225 | VITE M14X 2X160 U5737 8.8 BR | BOLT M 14 X160 5737 8.G | VIS M 14 X160 5737 8.G | SCHRAUBE M 14 X160 5737 8.G | TORNILLO M 14 X160 5737 8.G |
| 29 | F01020232 | VITE M14X 2X200 U5737 8.8 ZN | BOLT 14X200 5737 8.G GALVANIZ. | VIS 14X200 5737 8.G ZN | SCHRAUBE 14X200 5737 8.G ZN | TORNILLO 14X200 5737 8.G ZN |
| 30 | F01020432 | VITE M 8X1,25X16 U5739 8.8 ZN | BOLT M 8X16 | VIS M 8X16 | SCHRAUBE M 8X16 | TORNILLO M 8X16 |
| 31 | F01020449 | VITE M 8X1,25X35 U5739 8.8 ZN | BOLT M 8X35 | VIS M 8X35 | SCHRAUBE M 8X35 | TORNILLO M 8X35 |
| 32 | F01200220 | DADO M 5X 0,8 U5588 6.8 ZN | NUT 5 UNI 5588 6.8 GALVANIZED | ECROU 5 UNI 5588 6.8 ZN | MUTTER 5 UNI 5588 6.8 ZN | TUERCA 5 UNI 5588 6.8 ZN |
| 33 | F01200244 | DADO M 8X1,25 U5588 6.8 ZN | NUT M8 | ECROU M8 | MUTTER M8 | DADO M8 |
| 34 | F01200306 | DADO M14X 2 U5588 6.8 ZN | NUT M14X2 | ECROU M14X2 | MUTTER M14X2 | DADO M14X2 |
| 35 | F01410051 | ROS.M8 8,4X 17X1,6 U6592 ZN | PLANE WASHER D.8 | RONDELLE D.8 | SCHEIBE D.8 | ARANDELA D.8 |
| 36 | F01420011 | ROS.M4 4,3X 16X 1 U6593 ZN | FLAT WASHER 4-3X 16X1-5 6593 G | ROND.PLATE 4-3X 16X1-5 6593 ZN | SCHEIBE 4-3X 16X1-5 6593 ZN | ARAND. PLANA 4-3X 16X1-5 6593 |
| 37 | F02050101 | ANELLO E. DE 25X 1,2 U7435 C70 | SEEGER RING E. 25X1,2 7435 C70 | SEEGER E. 25X 1,2 U7435 C70 | SEEGERING E. 25X 1,2 U7435 C70 | ANILLO E. 25X 1,2 U7435 C70 |
| 38 | F04010135 | CUSC.D25 D47 B12 6005 2RS EX> | | | | |
| 39 | F02100087 | SPINA E.P. 5X 30 U6873 C70 BR | PIN EL. 5 X30 DIN 1481 | FICHE EL. 5 X30 DIN 1481 | SPANNSTIFT 5 X30 DIN 1481 | CLAVIJA EL.5 X30 DIN 1481 |
| 40 | F06080008 | CATENA 1/2 ISO 083 16 MAGLIE | CHAIN SECTION 1/2-3/16 16 MES | TRONÃON CHA+NE 1/2-3/16 16 MAI | KET.ABSCHN.1/2-3/16 16 GLIEDER | TRAMO CAD.1/2-3/16 16 ESLABONE |
| 41 | F06080230 | CATENA 5/8 ISO 10B 46 MAGLIE | CUT-DOWN CHAIN .ISO 10B-1 46-L | TRONCON CHAINE ISO 10B-1 46 MA | KETTENLZNGE ISO 10B-1 46 GLIE | TRECHO CADENA ISO 10B-1 46 ESL |
| 42 | F06080038 | CATENA 1/2 ISO 083 74 MAGLIE | CHAIN 1/2 ISO 083 74 LINKS | CHAINE 1/2 ISO 083 74 MAILLES | KETTE 1/2 ISO 083 94 GLIEDER | CADENA 1/2 ISO 083 74 ESLABNEL |
| 43 | G66248162 | INGRANAGGIO Z-17 SP | GEAR Z-17 SP | ENGRENAGE Z-17 SP | ZAHNRAD Z-17 SP | ENGRANAJE Z-17 SP |
| 44 | G66248163 | INGRANAGGIO Z-18 SP | GEAR Z-18 SP | ENGRENAGE Z-18 SP | ZAHNRAD Z-18 SP | ENGRANAJE Z-18 SP |
| 45 | G66248164 | INGRANAGGIO Z-19 SP | GEAR Z-19 SP | ENGRENAGE Z-19 SP | ZAHNRAD Z-19 SP | ENGRANAJE Z-19 SP |
| 46 | G66248165 | INGRANAGGIO Z-20 SP | GEAR Z-20 SP | ENGRENAGE Z-20 SP | ZAHNRAD Z-20 SP | ENGRANAJE Z-20 SP |
| 47 | G66248166 | INGRANAGGIO Z-21 SP | GEAR Z-21 SP | ENGRENAGE Z-21 SP | ZAHNRAD Z-21 SP | ENGRANAJE Z-21 SP |
| 48 | G66248167 | INGRANAGGIO Z-22 SP | GEAR Z-22 SP | ENGRENAGE Z-22 SP | ZAHNRAD Z-22 SP | ENGRANAJE Z-22 SP |
| 49 | G66248168 | INGRANAGGIO Z-23 SP | GEAR Z-23 SP | ENGRENAGE Z-23 SP | ZAHNRAD Z-23 SP | ENGRANAJE Z-23 SP |
| 50 | G14230710 | ASSE TRASM.L.2653 | | | | |
| 51 | G15231960 | ASS.PIGNONE Z20 ZN | | | | |
| 52 | G15275370 | CARTER | | | | |
| 53 | F01200293 | DADO M12X1,75 U5588 6.8 ZN | NUT M12 | ECROU M12 | MUTTER M12 | DADO M12 |
| 54 | G15275380 | SUPPORTO TRASMISSIONE | | | | |

# TAV. 31

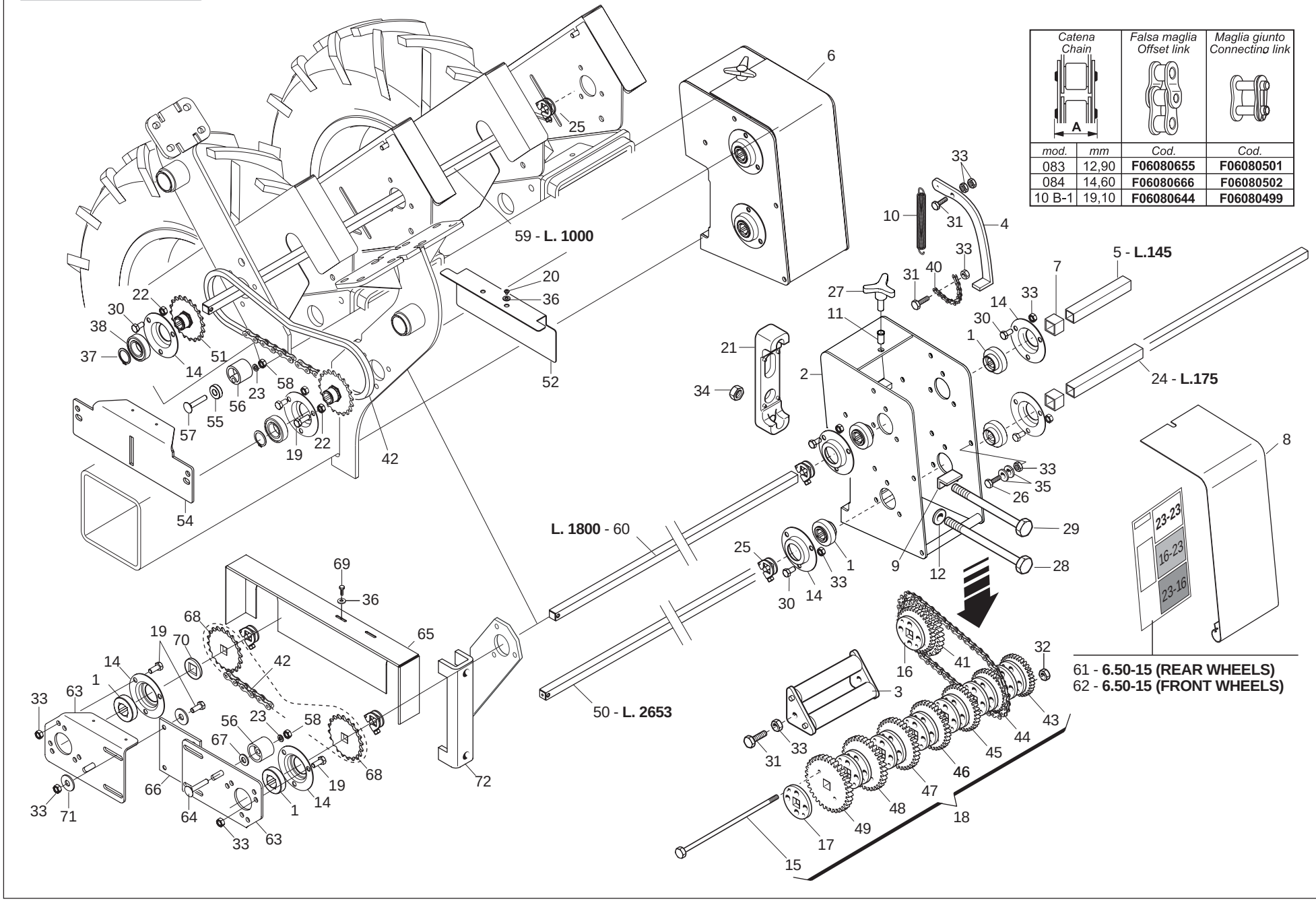


| Catena Chain | | Falsa maglia Offset link | Maglia giunto Connecting link |
|---|---|---|---|
| mod. | mm | Cod. | Cod. |
| 083 | 12,90 | **F06080655** | **F06080501** |
| 084 | 14,60 | **F06080666** | **F06080502** |
| 10 B-1 | 19,10 | **F06080644** | **F06080499** |



GASPARDO

## *TRASMISSIONE CAMBIO*

TAV. 31

| Pos. | Cod. | Descrizione | Description | Description | Benennung | Descripcion |
|---|---|---|---|---|---|---|
| 55 | G18801680 | BOCCOLA 11 X25 X7,5 ZN | BUSHING 11X25X7,5 GALVA | BOITE 11X25X7,5 ZN | BsCHSE 11X25X7,5 ZN | CASQUILLO 11X25X7,5 ZN |
| 56 | G66248207 | TENDICATENA SPAND. SP-520 | CHAIN TENSIONER | TENDEUR DE CHAINE EPAND. ENGR. | KETTENSPANNER DsNGERSTR. SP-52 | TENSOR DE CADENA ABON. SP-520 |
| 57 | F01060050 | BUL.M 8X1,25X 55 U5732 4.6 ZN | BOLT 8 X55 5732 4.6 GALVANIZED | VIS 8 X55 5732 4.6 ZN | SCHRAUBE 8 X55 5732 4.6 ZN | TORNILLO 8 X55 5732 4.6 ZN |
| 58 | F01060047 | BUL.M 8X1,25X 45 U5732 4.6 ZN | BOLT 8X45 5732 4.6 GALVANIZED | VIS 8X45 5732 4.6 ZN | SCHRAUBE 8X45 5732 4.6 ZN | TORNILLO 8X45 5732 4.6 ZN |
| 59 | G22230138 | ASSE CAMBIO 4F.80-6F.45 L.1000 | GEAR SPINDLE 4-ROW 80- 6-ROW.4 | AXE BOITE DE VITESSE 4 RA | GETRIEBEACHSE 4 R. 80-6 R.45 L | EJE CAMBIO 4 FILAS. 80-6 FILAS |
| 60 | G20870028 | ASSE SERB.LATO TRAS.6F.L.1800 | AXLE- GEARBOX SIDE- 6-ROW L.18 | AXE RESERVOIR COTE ENTRAINEMEN | ACHSE BEHZLTER ANTRIEBSS. 6F.L | EJE DEPS. LADO TRANS. 6 FILA A |
| 61 | G19701412 | DECAL.CAMBIO RUOTA 6,50-15 | GEARBOX WHEEL 6,50-15 STICKER | ETIQ. BOITE DE VIT. ROUE 6,50- | AUFKLEBER GETRIEBE RAD 6,50-15 | CAL. CAMBIOVEL. RUEDA 6,50-15 |
| 62 | G19703161 | DECAL.CAMBIO RUOTA 6,50-15 EST | GEARBOX WHEEL 6,50-15 STICKER | ETIQ. BOITE DE VIT. ROUE 6,50- | AUFKLEBER GETRIEBE RAD 6,50-15 | CAL. CAMBIOVEL. RUEDA 6,50-15 |
| 63 | G15470851 | FIANCO SUPP.TRASM.SPANDI | SPREADER TRANSM. SIDE SUPPORT | COTE SUPPORT TRANSM. EPAND. | SEITEN HALTER. ANTRIEB DUNGERS | COSTADO SOPORTE TRANSM. ABONAD |
| 64 | F01060047 | BUL.M 8X1,25X 45 U5732 4.6 ZN | BOLT 8X45 5732 4.6 GALVANIZED | VIS 8X45 5732 4.6 ZN | SCHRAUBE 8X45 5732 4.6 ZN | TORNILLO 8X45 5732 4.6 ZN |
| 65 | G15473080 | CARTER RINVIO DA ANT.A POST. | INTERMEDIATE CASE | CARTER TRANSMISSION | VORGELEGEGEHZUSE | CµRTER TRANSMISIN C |
| 66 | G15272470 | PIASTRA PROLUNGA TRASM.SPAND. | TRANSMISSION EXTENSION PLATE | PLAQUE RALL. TRANSMISSION | VERL.PLATTE GETRIEBE | PLACA PROL. TRANSMISIËN |
| 67 | F01420060 | ROS.M10 10,5X 30X2,5 U6593 ZN | WASHER 10,5X30 | RONDELLE 10,5X30 | SCHEIBE 10,5X30 | ARANDELA 10,5X30 |
| 68 | G22250007 | INGR.CON MOZZO 1/2 Z-20 SV | GEARS- W/ HUB 1/2 Z-20 SV | ENGRENAGE 1/2 Z-20 | ZAHNRAD MIT NABE 1/2 Z-20 SV | ENGRAN.CON PERNO 1/2 Z-20 SV |
| 69 | F01070074 | VIT.A.4,2X1,41X 25 6954 4.8NI | BOLT 4-2X25 DIN 7981 | VIS 4-2X25 DIN 7981 | SCHRAUBE 4-2X25 DIN 7981 | TORNILLO 4-2X25 DIN 7981 |
| 70 | G18701650 | RONDELLA FORO QUADRO ZN | WASHER 16,5X30X2,5 ZN | RONDELLE 16,5X30X2,5 ZN | UNTERLEGSCHEIBE 16,5X30X2,5 ZN | ARANDELA 16,5X30X2,5 ZN |
| 71 | G66248218 | RONDELLA DISTAN.SPAND. | MAN. SPR. SPACER WASHER | RONDELLE ENTRETOISE EP. ENGRAI | ABSTANDSCHEIBE DsNGERSTREUER | ARANDELA DISTAN.ABONAD. |
| 72 | G15470381 | SUPPORTO RINVIO TUBO 150 | TRANSM. SUPPORT FOR PIPE 150 | SUPPORT RENVOI POUR TUBE 150 | HALTERUNG VORGELEGE ROHR 150 | SOPORTE TRANSMISION TUBO 150 |

# TAV. 41

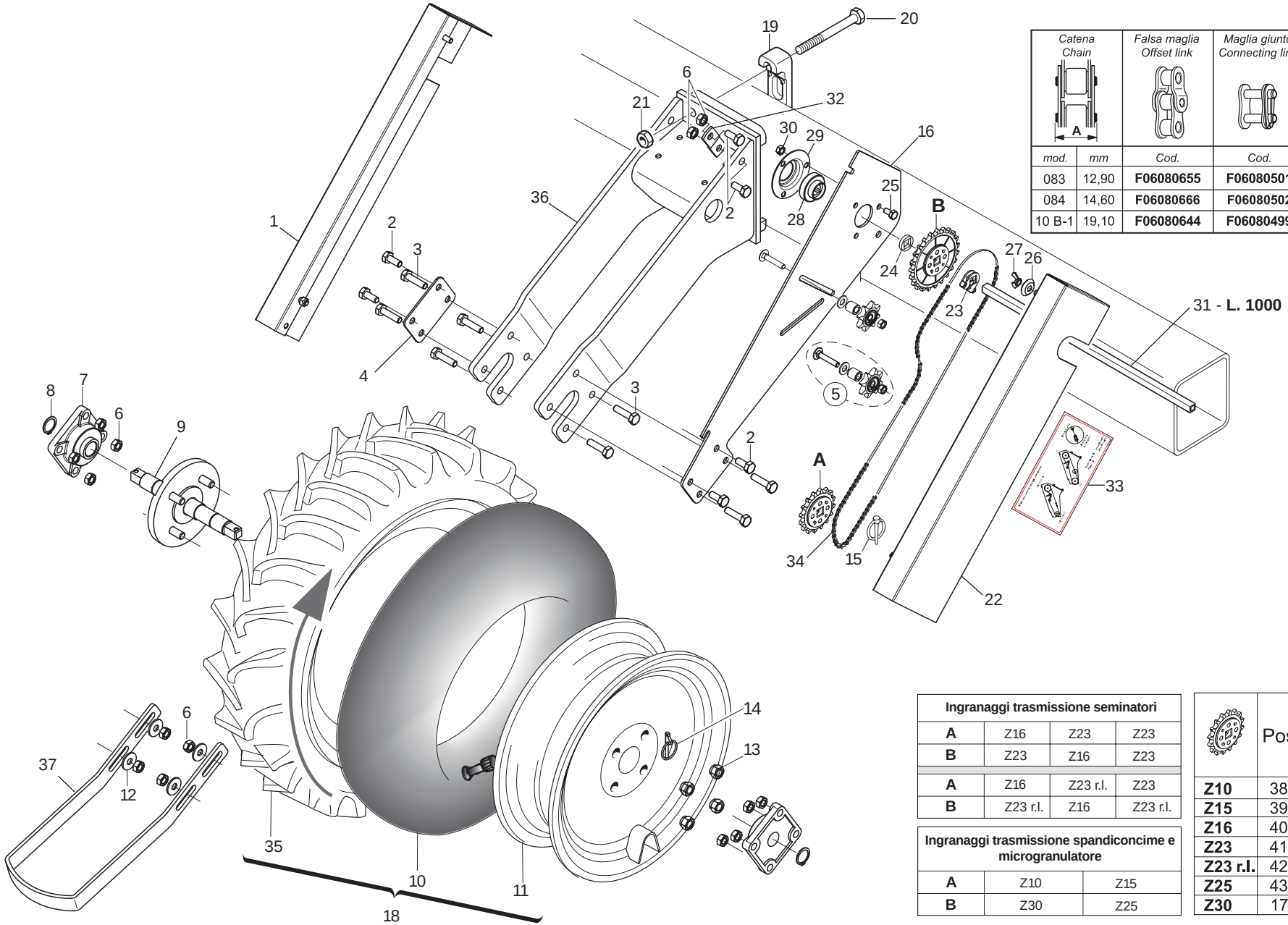


| Catena Chain | | Falsa maglia Offset link | Maglia giunto Connecting link |
|---|---|---|---|
| mod. | mm | Cod. | Cod. |
| 083 | 12,90 | **F06080655** | **F06080501** |
| 084 | 14,60 | **F06080666** | **F06080502** |
| 10 B-1 | 19,10 | **F06080644** | **F06080499** |

| Ingranaggi trasmissione seminatori | | | |
|---|---|---|---|
| **A** | Z16 | Z23 | Z23 |
| **B** | Z23 | Z16 | Z23 |
| **A** | Z16 | Z23 r.l. | Z23 |
| **B** | Z23 r.l. | Z16 | Z23 r.l. |

| Ingranaggi trasmissione spandiconcime e microgranulatore | | |
|---|---|---|
| **A** | Z10 | Z15 |
| **B** | Z30 | Z25 |

| | Pos. |
|---|---|
| **Z10** | 38 |
| **Z15** | 39 |
| **Z16** | 40 |
| **Z23** | 41 |
| **Z23 r.l.** | 42 |
| **Z25** | 43 |
| **Z30** | 17 |



GASPARDO

## *TRASMISSIONE RUOTE*

TAV. 41

| Pos. | Cod. | Descrizione | Description | Description | Benennung | Descripcion |
|---|---|---|---|---|---|---|
| 1 | G16630360 | CARTER SX | LEFT CASE | CARTE GCH | GEHZUSE LI | CARTER IZQ |
| 2 | F01020472 | VITE M10X 1,5X25 U5739 8.8 ZN | BOLT 10X25 5739 8.G GALVANIZED | VIS 10X25 5739 8.G ZN | SCHRAUBE 10X25 5739 8.G ZN | TORNILLO 10X25 5739 8.G ZN |
| 3 | F01020481 | VITE M10X 1,5X40 U5739 8.8 ZN | BOLT 10X40 5739 8.G GALVANIZED | VIS 10X40 5739 8.G ZN | SCHRAUBE 10X40 5739 8.G ZN | TORNILLO 10X40 5739 8.G ZN |
| 4 | G16630380 | SCONTRO 100X70-3 4F11 70X40 | STRIKER PLATE 100X70-3 4F | BUTEE 100X70-3 4F | ANSCHLAG 100X70-3 4F | ELEMENTO DE EMPALME 100X70-3 4 |
| 5 | G16630810 | KIT INGR.Z8 5/8"X3/8" CUSC. | | | | |
| 6 | F01200270 | DADO M10X 1,5 U5588 6.8 ZN | NUT M10 | ECROU M10 | MUTTER M10 | DADO M10 |
| 7 | F04100137 | SUPPORTO FY 25 TF | SUPPORT FY 25 TF | SUPPORT FY 25 TF | HALTERUNG FY 25 TF | SOPORTE FY 25 TF |
| 8 | F02050101 | ANELLO E. DE 25X 1,2 U7435 C70 | SEEGER RING E. 25X1,2 7435 C70 | SEEGER E. 25X 1,2 U7435 C70 | SEEGERING E. 25X 1,2 U7435 C70 | ANILLO E. 25X 1,2 U7435 C70 |
| 9 | G22270281 | ASSE RUOTA TRASM.MAGG. SP/S | INCREASED DRIVE WHEEL AXLE | AXE ROUE ENTRAINEMENT 6.50-15 | RADACHSE sBERBEM. ANTRIEB SP/S | EJE RUEDA TRANS. SOBREDIMENS. |
| 10 | F06120135 | CAMERA 15 T 340 | CHAMBER 15 T 340 | CHAMBRE 15 T 340 | KAMMER 15 T 340 | CAMARA 15 T 340 |
| 11 | F06120207 | CERCHIO 5J 15 H2 PV RAL 9001 | | | | |
| 12 | F01420060 | ROS.M10 10,5X 30X2,5 U6593 ZN | WASHER 10,5X30 | RONDELLE 10,5X30 | SCHEIBE 10,5X30 | ARANDELA 10,5X30 |
| 13 | F01250040 | DADO COLON. 12X1.5 ZN | COLUMN NUT M12X1.5 STUD BOLT | ECROU M12X1. 5 COLONNE | SCHRAUBBOLZENMUTTER M12X1.5 | TUERCA 12X1.5 COLUMNA |
| 14 | F02200452 | SPINA SCATTO D.4,4 B/80 ZN | SNAP PIN D.4-4 B/80 | FICHE A DETENTE D. 4-4 B/80 | EINRASTSTIFT D 4-4 B/80 | CLAVIJA DE MUELLE D.4-4 B/80 |
| 15 | F02200452 | SPINA SCATTO D.4,4 B/80 ZN | SNAP PIN D.4-4 B/80 | FICHE A DETENTE D. 4-4 B/80 | EINRASTSTIFT D 4-4 B/80 | CLAVIJA DE MUELLE D.4-4 B/80 |
| 16 | G16630311 | SUPPORTO TRASMISSIONE SP540 | | | | |
| 17 | G16630430 | PIGNONE Z-30 ZN. | PINION Z-30 ZN. | PIGNON Z-30 ZN. | RITZE Z-30 ZN. | PINION Z-30 ZN. |
| 18 | F06120116 | RUOTA 6.50/80-15 COMPL. | UPRIGHT- WIDE RUBBERED WHEEL | MONT. ROUE CAOUTCHOUT. LARG. | STZNDER BREITES GUMMIRAD | MONT.RUEDA DE GOMADA LARGA |
| 19 | G19204030 | SCONTRO FISS.150 2F D15 | | | | |
| 20 | F01020236 | VITE M14X 2X220 U5737 8.8 BR | SCREW M14X2X220 U5737 8.8 BR | VIS M14X2X220 U5737 8.8 BR | SCHRAUBE M14X2X220 U5737 8.8 | TORNILLO M14X2X220 U5737 8.8 |
| 21 | F01200306 | DADO M14X 2 U5588 6.8 ZN | NUT M14X2 | ECROU M14X2 | MUTTER M14X2 | DADO M14X2 |
| 22 | G16630350 | CARTER DX | RIGHT CASE | CARTER DRT | GEHZUSE RE | CARTER DER |
| 23 | G22505085 | FERMO ASSE IN LAMIERA | PLATE AXLE STOP | ARRET AXE EN TOLE | FESTSTELLVORRICHTUNG BLECHACHS | BLOQUEO EJE DE CHAPA |
| 24 | G66248218 | RONDELLA DISTAN.SPAND. | MAN. SPR. SPACER WASHER | RONDELLE ENTRETOISE EP. ENGRAI | ABSTANDSCHEIBE DsNGERSTREUER | ARANDELA DISTAN.ABONAD. |
| 25 | F01020432 | VITE M 8X1,25X16 U5739 8.8 ZN | BOLT M 8X16 | VIS M 8X16 | SCHRAUBE M 8X16 | TORNILLO M 8X16 |
| 26 | G22220083 | RONDELLA AD IMBOCCO | LEAD-IN WASHER | RONDELLE EMBOUTIE | TRICHTERSCHEIBE | ARANDELA DE MUESCA |
| 27 | F01240024 | DADO M 8X1,25 U5448 5.8 ZN | NUT 8 UNI 5448 5.8 ZN | ECROU 8 UNI 5448 5.8 ZN | MUTTER 8 UNI 5448 5.8 ZN | TUERCA 8 UNI 5448 5.8 ZN |
| 28 | G14830390 | CUSCINETTO FORO QUADRO | SQUARE-HOLED BEARING | ROULEMENT AL+SAGE CARR+ | VIERKANTLAGER | COJINETE ORIFICIO CUADRADO |
| 29 | G22230094 | SUPPORTO CUSCINETTO | BEARING SUPPORT | SUPPORT PALIER | LAGERBsCHSE | SOPORTE COJINETE |
| 30 | F01220022 | DADO M 8X1,25 D980 8 ZN | SELF LOCKING NUT M8X1,25 980V | ECROU AUTOBL. M8X1,25 980-V | SELBSTSP.MUTT. M8X1,25 980-V | DADO AUTOBL. M8X1,25 980-V |
| 31 | G22230138 | ASSE CAMBIO 4F.80-6F.45 L.1000 | GEAR SPINDLE 4-ROW 80- 6-ROW.4 | AXE BOITE DE VITESSE 4 RA | GETRIEBEACHSE 4 R. 80-6 R.45 L | EJE CAMBIO 4 FILAS. 80-6 FILAS |
| 32 | G16630320 | ATTACCO AL SUPPORTO RUOTA | SUPP. WHEEL COUPLING | FIXATION SUPPORT ROUET | KUPPLUNG HALT. KL. RAD | CONEXIN SOP. RUEDECILLA |
| 33 | G19704690 | DECAL.DISP.CATENE/INGR.R.POST. | STICKER | DECALCOMANIE | ABZIEHBILDER | CALCOMANIAS |
| 34 | F06080168 | CATENA 5/8 ISO 10B 86 MAGLIE | CUT-DOWN CHAIN .ISO 10B-1 86 - | TRONCON CHAINE ISO 10B-1 86 MA | KETTENLZNGE ISO 10B-1 186 GLIE | TRECHO CADENA ISO 10B-1 86 ESL |
| 35 | F06120180 | COPERTURA 6.5/80-15 IM 110 6PR | COVERING 6.5/80-15 IM 110 2PR | COUVERTURE 6.5/80-15 IM110 4PR | MANTEL .5/80-15 IM 110 2PR | CUBIERTA 6.5/80-15 IM 110 2PR |
| 36 | G16630300 | SUPPORTO RUOTA 6,50/80-15 | WHEEL SUPPORT 6,50/80-15 | SUPPORT ROUE 6,50/80-15 | RADLAGER 6,50/80-15 | SOPORTE RUEDA 6,50/80-15 |
| 37 | G15430660 | RASCHIATERRA MAGGIORATO SP 530 | INCREASED SOIL-SCRAPER SP 530 | RACLEUR MAJOR. SP 530 | sBERGROSSER ERDSCHABER SP 530 | RASCADOR TIERRA OBREDIMENS. SP |
| 38 | G22220113 | INGRANAGGIO Z-10 FERRO | GEAR Z-10 IRON | ENGRENAGE Z-10 FER | ZAHNRAD Z-10 EISEN | ENGRANAJE Z-10 HIERRO |
| 39 | G16630390 | PIGNONE Z-15 ZN | PINION Z-15 ZN | PIGNON Z-15 ZN | RITZE Z-15 ZN | PINION Z-15 ZN |
| 40 | G16630400 | PIGNONE Z-16 ZN. | PINION Z-16 ZN. | PIGNON Z-16 ZN. | RITZE Z-16 ZN. | PINION Z-16 ZN. |
| 41 | G16630410 | PIGNONE Z-23 ZN. | PINION Z-23 ZN. | PIGNON Z-23 ZN. | RITZE Z-23 ZN. | PINION Z-23 ZN. |
| 42 | G16630370 | INGRANAGGIO R.LIBERA Z-23 ZN | FREE WHEEL GEAR Z-23 | ENGRENAGE Z-23 ROUE LIBRE | ZAHNRAD FREILAUF Z-23 | ENGRANAJE R.LIBRE Z-23 |
| 43 | G16630420 | PIGNONE Z-25 ZN. | PINION Z-25 ZN. | PIGNON Z-25 ZN. | RITZE Z-25 ZN. | PINION Z-25 ZN. |

# TAV. 51

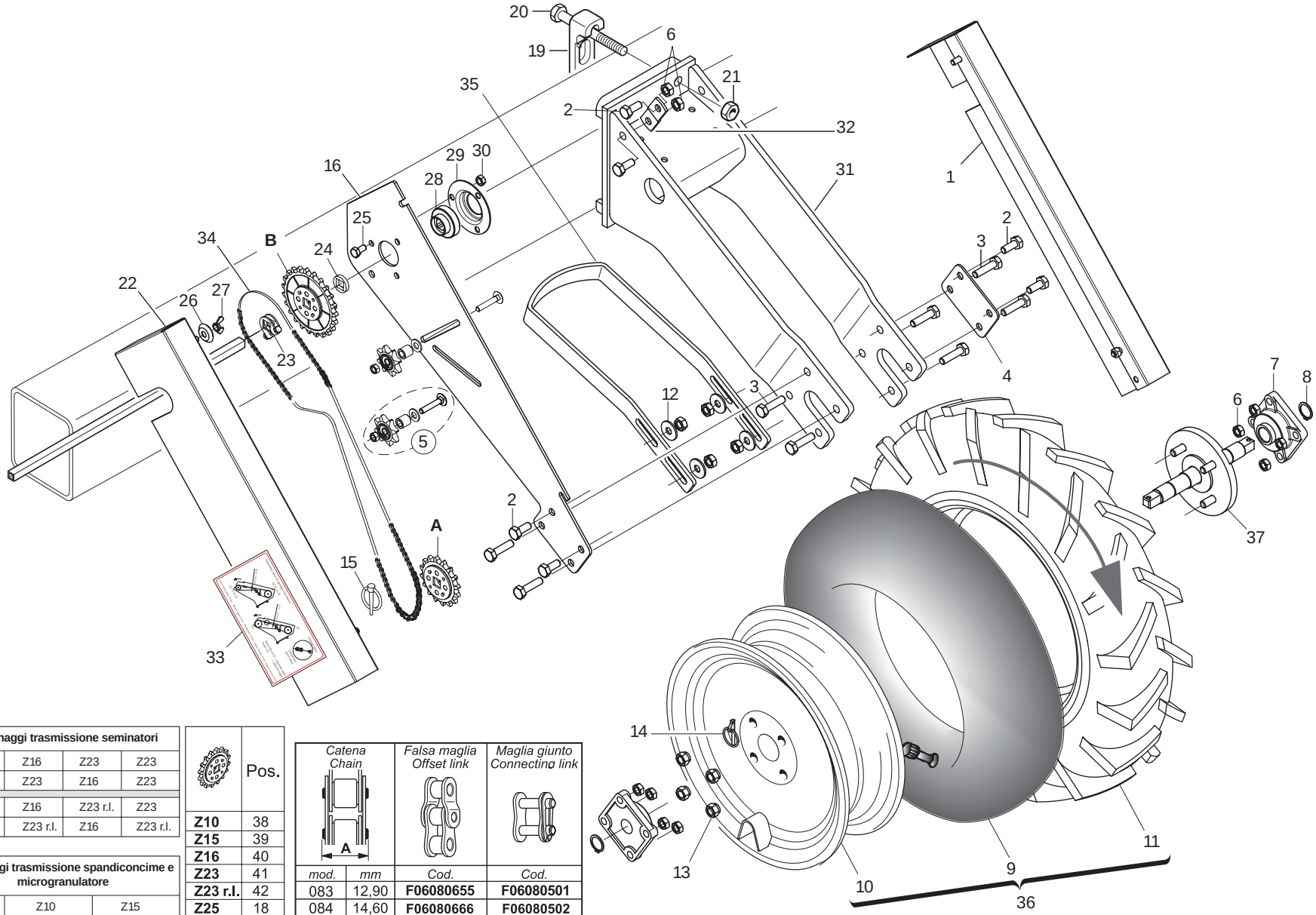


| Ingranaggi trasmissione seminatori | | | |
|---|---|---|---|
| A | Z16 | Z23 | Z23 |
| B | Z23 | Z16 | Z23 |
| A | Z16 | Z23 r.l. | Z23 |
| B | Z23 r.l. | Z16 | Z23 r.l. |

| Ingranaggi trasmissione spandiconcime e microgranulatore | | |
|---|---|---|
| A | Z10 | Z15 |
| B | Z30 | Z25 |

| | Pos. |
|---|---|
| Z10 | 38 |
| Z15 | 39 |
| Z16 | 40 |
| Z23 | 41 |
| Z23 r.l. | 42 |
| Z25 | 18 |
| Z30 | 17 |

| Catena Chain | | Falsa maglia Offset link | Maglia giunto Connecting link |
|---|---|---|---|
| mod. | mm | Cod. | Cod. |
| 083 | 12,90 | F06080655 | F06080501 |
| 084 | 14,60 | F06080666 | F06080502 |
| 10 B-1 | 19,10 | F06080644 | F06080499 |

## *TRASMISSIONE RUOTE ANTERIORI*

TAV. 51

| Pos. | Cod. | Descrizione | Description | Description | Benennung | Descripcion |
|---|---|---|---|---|---|---|
| 1 | G16630360 | CARTER SX | LEFT CASE | CARTE GCH | GEHZUSE LI | CARTER IZQ |
| 2 | F01020472 | VITE M10X 1,5X25 U5739 8.8 ZN | BOLT 10X25 5739 8.G GALVANIZED | VIS 10X25 5739 8.G ZN | SCHRAUBE 10X25 5739 8.G ZN | TORNILLO 10X25 5739 8.G ZN |
| 3 | F01020481 | VITE M10X 1,5X40 U5739 8.8 ZN | BOLT 10X40 5739 8.G GALVANIZED | VIS 10X40 5739 8.G ZN | SCHRAUBE 10X40 5739 8.G ZN | TORNILLO 10X40 5739 8.G ZN |
| 4 | G16630380 | SCONTRO 100X70-3 4F11 70X40 | STRIKER PLATE 100X70-3 4F | BUTEE 100X70-3 4F | ANSCHLAG 100X70-3 4F | ELEMENTO DE EMPALME 100X70-3 4 |
| 5 | G16630710 | TENDICATENA CON VITE | CHAIN TENSIONER WITH SCREW | | | |
| 6 | F01200270 | DADO M10X 1,5 U5588 6.8 ZN | NUT M10 | ECROU M10 | MUTTER M10 | DADO M10 |
| 7 | F04100137 | SUPPORTO FY 25 TF | SUPPORT FY 25 TF | SUPPORT FY 25 TF | HALTERUNG FY 25 TF | SOPORTE FY 25 TF |
| 8 | F02050101 | ANELLO E. DE 25X 1,2 U7435 C70 | SEEGER RING E. 25X1,2 7435 C70 | SEEGER E. 25X 1,2 U7435 C70 | SEEGERING E. 25X 1,2 U7435 C70 | ANILLO E. 25X 1,2 U7435 C70 |
| 9 | F06120135 | CAMERA 15 T 340 | CHAMBER 15 T 340 | CHAMBRE 15 T 340 | KAMMER 15 T 340 | CAMARA 15 T 340 |
| 10 | F06120207 | CERCHIO 5J 15 H2 PV RAL 9001 | | | | |
| 11 | F06120180 | COPERTURA 6.5/80-15 IM 110 6PR | COVERING 6.5/80-15 IM 110 2PR | COUVERTURE 6.5/80-15 IM110 4PR | MANTEL .5/80-15 IM 110 2PR | CUBIERTA 6.5/80-15 IM 110 2PR |
| 12 | F01420060 | ROS.M10 10,5X 30X2,5 U6593 ZN | WASHER 10,5X30 | RONDELLE 10,5X30 | SCHEIBE 10,5X30 | ARANDELA 10,5X30 |
| 13 | F01250040 | DADO COLON. 12X1.5 ZN | COLUMN NUT M12X1.5 STUD BOLT | ECROU M12X1. 5 COLONNE | SCHRAUBBOLZENMUTTER M12X1.5 | TUERCA 12X1.5 COLUMNA |
| 14 | F02200452 | SPINA SCATTO D.4,4 B/80 ZN | SNAP PIN D.4-4 B/80 | FICHE A DETENTE D. 4-4 B/80 | EINRASTSTIFT D 4-4 B/80 | CLAVIJA DE MUELLE D.4-4 B/80 |
| 15 | F02200452 | SPINA SCATTO D.4,4 B/80 ZN | SNAP PIN D.4-4 B/80 | FICHE A DETENTE D. 4-4 B/80 | EINRASTSTIFT D 4-4 B/80 | CLAVIJA DE MUELLE D.4-4 B/80 |
| 16 | G16630311 | SUPPORTO TRASMISSIONE SP540 | | | | |
| 17 | G16630430 | PIGNONE Z-30 ZN. | PINION Z-30 ZN. | PIGNON Z-30 ZN. | RITZE Z-30 ZN. | PINION Z-30 ZN. |
| 18 | G16630420 | PIGNONE Z-25 ZN. | PINION Z-25 ZN. | PIGNON Z-25 ZN. | RITZE Z-25 ZN. | PINION Z-25 ZN. |
| 19 | G19204030 | SCONTRO FISS.150 2F D15 | | | | |
| 20 | F01020236 | VITE M14X 2X220 U5737 8.8 BR | SCREW M14X2X220 U5737 8.8 BR | VIS M14X2X220 U5737 8.8 BR | SCHRAUBE M14X2X220 U5737 8.8 | TORNILLO M14X2X220 U5737 8.8 |
| 21 | F01200306 | DADO M14X 2 U5588 6.8 ZN | NUT M14X2 | ECROU M14X2 | MUTTER M14X2 | DADO M14X2 |
| 22 | G16630350 | CARTER DX | RIGHT CASE | CARTER DRT | GEHZUSE RE | CARTER DER |
| 23 | G22505085 | FERMO ASSE IN LAMIERA | PLATE AXLE STOP | ARRET AXE EN TOLE | FESTSTELLVORRICHTUNG BLECHACHS | BLOQUEO EJE DE CHAPA |
| 24 | G66248218 | RONDELLA DISTAN.SPAND. | MAN. SPR. SPACER WASHER | RONDELLE ENTRETOISE EP. ENGRAI | ABSTANDSCHEIBE DsNGERSTREUER | ARANDELA DISTAN.ABONAD. |
| 25 | F01020432 | VITE M 8X1,25X16 U5739 8.8 ZN | BOLT M 8X16 | VIS M 8X16 | SCHRAUBE M 8X16 | TORNILLO M 8X16 |
| 26 | G22220083 | RONDELLA AD IMBOCCO | LEAD-IN WASHER | RONDELLE EMBOUTIE | TRICHTERSCHEIBE | ARANDELA DE MUESCA |
| 27 | F01240024 | DADO M 8X1,25 U5448 5.8 ZN | NUT 8 UNI 5448 5.8 ZN | ECROU 8 UNI 5448 5.8 ZN | MUTTER 8 UNI 5448 5.8 ZN | TUERCA 8 UNI 5448 5.8 ZN |
| 28 | G14830390 | CUSCINETTO FORO QUADRO | SQUARE-HOLED BEARING | ROULEMENT AL+SAGE CARR+ | VIERKANTLAGER | COJINETE ORIFICIO CUADRADO |
| 29 | G22230094 | SUPPORTO CUSCINETTO | BEARING SUPPORT | SUPPORT PALIER | LAGERBsCHSE | SOPORTE COJINETE |
| 30 | F01220022 | DADO M 8X1,25 D980 8 ZN | SELF LOCKING NUT M8X1,25 980V | ECROU AUTOBL. M8X1,25 980-V | SELBSTSP.MUTT. M8X1,25 980-V | DADO AUTOBL. M8X1,25 980-V |
| 31 | G16630300 | SUPPORTO RUOTA 6,50/80-15 | WHEEL SUPPORT 6,50/80-15 | SUPPORT ROUE 6,50/80-15 | RADLAGER 6,50/80-15 | SOPORTE RUEDA 6,50/80-15 |
| 32 | G16630320 | ATTACCO AL SUPPORTO RUOTA | SUPP. WHEEL COUPLING | FIXATION SUPPORT ROUET | KUPPLUNG HALT. KL. RAD | CONEXIN SOP. RUEDECILLA |
| 33 | G19704701 | DECAL.CATENE/INGR.RUOTE ANT. | STICKER | DECALCOMANIE | ABZIEHBILDER | CALCOMANIAS |
| 34 | F06080168 | CATENA 5/8 ISO 10B 86 MAGLIE | CUT-DOWN CHAIN .ISO 10B-1 86 - | TRONCON CHAINE ISO 10B-1 86 MA | KETTENLZNGE ISO 10B-1 186 GLIE | TRECHO CADENA ISO 10B-1 86 ESL |
| 35 | G15430660 | RASCHIATERRA MAGGIORATO SP 530 | INCREASED SOIL-SCRAPER SP 530 | RACLEUR MAJOR. SP 530 | sBERGROSSER ERDSCHABER SP 530 | RASCADOR TIERRA OBREDIMENS. SP |
| 36 | F06120116 | RUOTA 6.50/80-15 COMPL. | UPRIGHT- WIDE RUBBERED WHEEL | MONT. ROUE CAOUTCHOUT. LARG. | STZNDER BREITES GUMMIRAD | MONT.RUEDA DE GOMADA LARGA |
| 37 | G22270281 | ASSE RUOTA TRASM.MAGG. SP/S | INCREASED DRIVE WHEEL AXLE | AXE ROUE ENTRAINEMENT 6.50-15 | RADACHSE sBERBEM. ANTRIEB SP/S | EJE RUEDA TRANS. SOBREDIMENS. |
| 38 | G22220113 | INGRANAGGIO Z-10 FERRO | GEAR Z-10 IRON | ENGRENAGE Z-10 FER | ZAHNRAD Z-10 EISEN | ENGRANAJE Z-10 HIERRO |
| 39 | G16630390 | PIGNONE Z-15 ZN | PINION Z-15 ZN | PIGNON Z-15 ZN | RITZE Z-15 ZN | PINION Z-15 ZN |
| 40 | G16630400 | PIGNONE Z-16 ZN. | PINION Z-16 ZN. | PIGNON Z-16 ZN. | RITZE Z-16 ZN. | PINION Z-16 ZN. |
| 41 | G16630410 | PIGNONE Z-23 ZN. | PINION Z-23 ZN. | PIGNON Z-23 ZN. | RITZE Z-23 ZN. | PINION Z-23 ZN. |
| 42 | G16630370 | INGRANAGGIO R.LIBERA Z-23 ZN | FREE WHEEL GEAR Z-23 | ENGRENAGE Z-23 ROUE LIBRE | ZAHNRAD FREILAUF Z-23 | ENGRANAJE R.LIBRE Z-23 |

TAV. 61

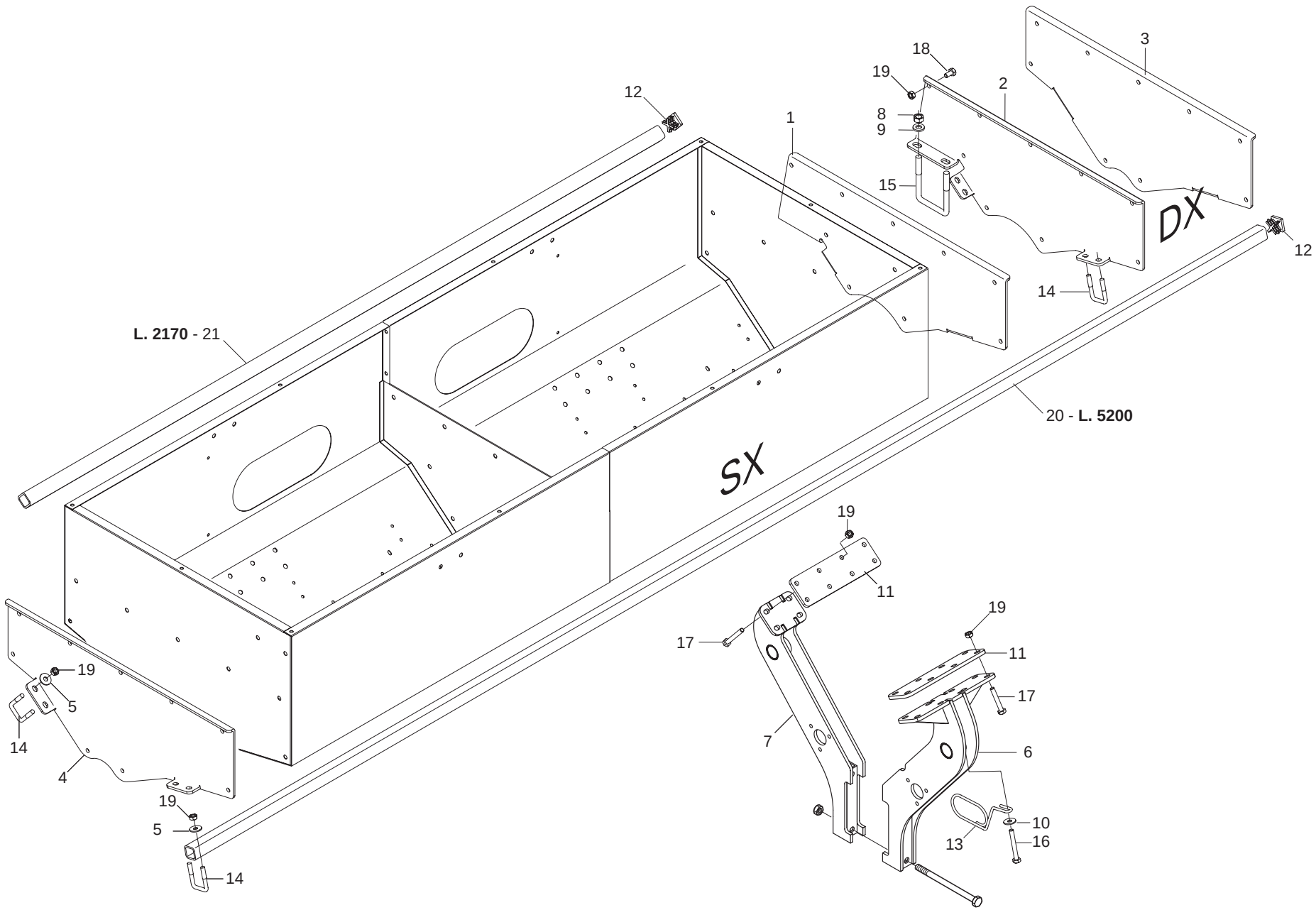




GASPARDO

cod. G19530911

## *SUPPORTI SERBATOI SPANDICONCIME*

TAV. 61

| Pos. | Cod. | Descrizione | Description | Description | Benennung | Descripcion |
|---|---|---|---|---|---|---|
| 1 | G15273322 | FIANCO SUPP.INTERNO SX. | | | | |
| 2 | G15273332 | FIANCO SUPP.INTERNO DX. | | | | |
| 3 | G15273341 | FIANCO SUPP.ESTERNO DX | | | | |
| 4 | G15273351 | FIANCO SUPP.ESTERNO SX | | | | |
| 5 | F01420059 | ROS.M10 10,5X 30X2,5 U6593 IX | WASHER 11X30X2,5 6593 A2 | RONDELLE 11X30X2,5 6593 A2 | UNTERLEGSCHEIBE 11X30X2,5 6593 | ARANDELA 11X30X2,5 6593 A2 |
| 6 | G15273443 | SUPPORTO POSTERIORE | | | | |
| 7 | G15273472 | SUPPORTO FRONTALE | | | | |
| 8 | F01200306 | DADO M14X 2 U5588 6.8 ZN | NUT M14X2 | ECROU M14X2 | MUTTER M14X2 | DADO M14X2 |
| 9 | G20970142 | RONDELLA 32X4X15,5 | WASHER 32X4X15-5 | RONDELLE 32X4X15-5 | UNTERLEGSCHEIBE 32X4X15-5 | ARANDELA 32X4X15-5 |
| 10 | F01420060 | ROS.M10 10,5X 30X2,5 U6593 ZN | WASHER 10,5X30 | RONDELLE 10,5X30 | SCHEIBE 10,5X30 | ARANDELA 10,5X30 |
| 11 | G15273531 | PIASTRA ATTACCO SUPPORTO | | | | |
| 12 | F20120346 | PUNTALE Q 35 ALETT.POLIT.NERO | | | | |
| 13 | G18904050 | MOLLA GUIDA 2 TUBI DEPRESS. | TUBE GUIDE SPRING | RESSORT GUIDE-TUBES | EDER ROHRF_HRUNG | MUELLE GUA TUBOS |
| 14 | F20110706 | CAV.Q.M10X 1,5X 30 47X 60 ZN | DISK SUPPORT.ELEMENT U BOLT SV | CAVALIER SUPPORT DISQUE SV | VERBINDUNG SCHEIBENHALTERUNG S | PERNO EN U SOP. DISCO SV |
| 15 | F20110770 | CAV.Q.M14X 2X 50 96X119 ZN | U-BOLT M14X96 - 119 ZN | CAVALIER M14X96 - 119 ZN | VERBINDUNG M14X96 - 119 ZN | PERNO EN U M14X96 - 119 ZN |
| 16 | F01220048 | DADO M12X1,75 D980 8 ZN | SELF LOCKING NUT M12X1,75 980V | ECROU AUTOBL. M12X1,75 980-V | SIEHE 00553312 | DADO AUTOBL. M12X1,75 980-V |
| 17 | F01020143 | VITE M10X 1,5X65 U5737 A2 IX | BOLT M10X 1,5X 65 U5737 8.8 IX | VIS M10X 1,5X 65 U5737 8.8 IX | SCHRAUBE M10X 1,5X 65 U5737 8. | TORNIL. M10X 1,5X 65 U5737 8.8 |
| 18 | F01020462 | VITE M10X1,5 X20 U5739 A2 IX | BOLT M10X1,5 X 20 U5739 8.8 IX | VIS M10X1,5 X 20 U5739 8.8 IX | SCHRAUBE M10X1,5 X 20 U5739 8. | TORNIL. M10X1,5 X 20 U5739 8.8 |
| 19 | F01200271 | DADO M10X 1,5 U5588 A2 IX | NUT 10 5588 6.8 INOX | ECROU 10 5588 6.8 INOX | MUTTER 10 5588 6.8 INOX | TUERCA 10 5588 6.8 INOX |
| 20 | G15275360 | TUBO Q. 35X 4X5200 | | | | |
| 21 | G16011830 | TUBO Q. 35X 4X2170 | | | | |

TAV. 70

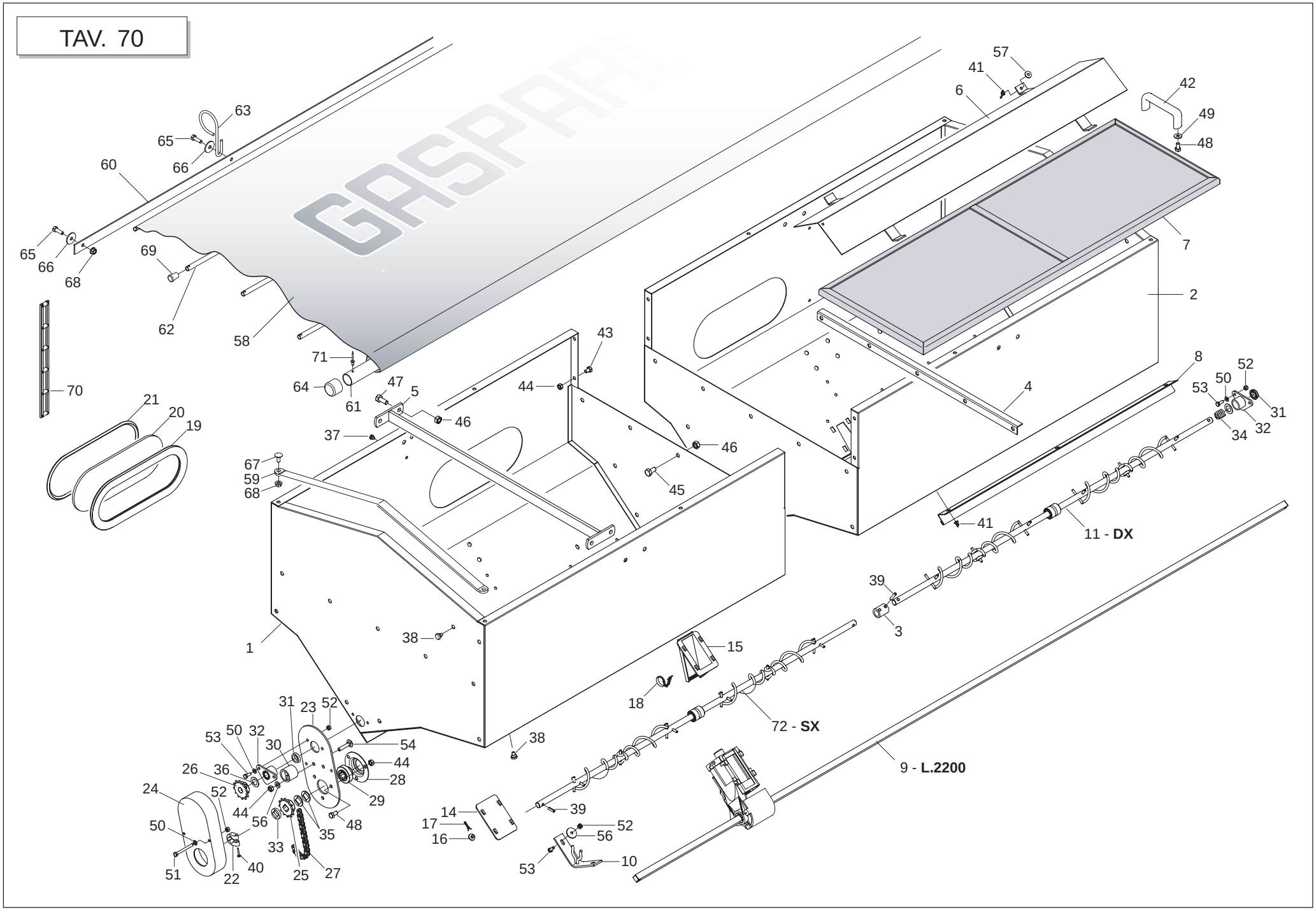




GASPARDO

cod. G19530911

## *SERBATOI SPANDICONCIME*

TAV. 70

| Pos. | Cod. | Descrizione | Description | Description | Benennung | Descripcion |
|---|---|---|---|---|---|---|
| 1 | G15273233 | ASS.SERBATOIO SX. MTE300 | | | | |
| 2 | G15273283 | ASS.SERBATOIO DX. MTE300 | | | | |
| 3 | G15275440 | BOCCOLA DI COLLEGAMENTO | | | | |
| 4 | G15273540 | LAMIERA APPOGGIO GRIGLIA | GRID SUPPORT BRACKET | +TRIER SUPPORT GRILLE | GITTERHALTB_GEL | ESTRIBO SOPORTE REJILLA |
| 5 | G15273560 | TIRANTE INTERNO | INT. TIE ROD | TRINGLE INT. | INNERE SPANNSTANGE | TIRANTE INTERIOR |
| 6 | G15273581 | TEGOLO MTE300 | | | | |
| 7 | G15273840 | GRIGLIA SERBATOIO MTE300 | TANK GRID. MTE300 | GRILLE RESERVOIR MTE300 | BEHZLTERGITTER MTE300 | REJILLA DEPS. MTE300 |
| 8 | G15273621 | PORTA PULIZIA | CLEANING DOOR | PORTE DE NETTOYAGE | REINIGUNGST_R | PUERTA LIMPIEZA |
| 9 | G22250276 | ASSE TRASM.SEMINAT.L.2200 SV | AXLE- SEEDING MACH. GEARBOX L. | AXE ENTRAINEMENT SEMEUR L. 220 | ACHSE SZELEMENT-ANTRIEB.L.2200 | EJE TRANS.SEMBR. L.2200 SV |
| 10 | G15273700 | SUPPORTO COCLEA | SCREW SUPPORT | SUPPORT VIS ALIMENTATION | HALTERUNG SCHNECKE | SOPORTE CËCLEA |
| 11 | G15275460 | MONT.ASSE AGITAT.BBP METRO | | | | |
| 12 | G19003660 | SUPPORTO | SUPPORT | SUPPORT | HALTERUNG | SOPORTE |
| 13 | G16670180 | INGRANAGGIO Z.15-DISTANZ.COMPL | COMPLETE GEAR Z.15-SPACER | ENGRENAGE Z.15 ENTRET. COMPL. | ZAHNRAD Z.15-KOMPL. DISTANZST | ENGRANAJE Z.15-DISTANC.COMPL |
| 14 | G66248184 | CHIUSURA USCITA SERB.SPAND.SP | OUTLET CLOSURE- MAN.SPREAD. TA | FERMETURE SORTIE RESERVOIR FER | VERSCHLUSS AUSTRITT DsNGERSTR. | CIERRE SALIDA DEPS. ABON. SP I |
| 15 | G66248187 | SCARICO SERB.SPAND.TIPO MICRO | MICRO TYPE MAN.SPR.TANK DISCH. | TRAPPE DE VIDANGE TYPE MICRO | BEHZLTERENTLADUNG STREUER TYP | DESCARGA DEPS. ABON.TIPO MICRD |
| 16 | G66248224 | FERMO DISTRIBUTORE SPAND. | FERT. SPR. DISTRIB. STOP | ARRET DISTRIBUTEUR EP. ENGRAIS | FESTSTELLVORRICHTUNG SZAPP. ST | BLOQUEO DISTRIBUIDOR ABON. |
| 17 | G65336089 | MOLLA SPEC.TENUTA FERMO SPAND. | SPEC.SPRING- BLOCK. MAN. SPR. | RESSORT SPEC. D'ETANCHEITE ARR | SPEZIALFEDER DICHTUNG STREUER | MUELLE ESPEC. RETENC. BLOQ |
| 18 | G65336080 | MOLLA SPEC.SCARICO SPAND.T.M. | SPEC.SPRING- MAN. SPR. DISCHAR | RESSORT SPEC. DECHARGEMENT FER | SPEZIALFEDER STREUERENTLADUNG | MUELLE ESPEC. DESCARGA ABONAD. |
| 19 | F03011155 | GUARNIZIONE VETRO TRAMOGGIA | GLASS SEAL | GARNITURE VERRE | GLASDICHTUNG | JUNTA VIDRIO |
| 20 | G16021080 | VETRO CONTROLLO LIVELLO SEMI | SEED LEVEL CHECKING GLASS | VITRE CONTROLE NIV. GRAINES | KONTROLLFENSTER SAMENSTAND | VIDRIO CONTROL NIVEL SEMILLAS |
| 21 | G68005092 | TENDITORE GUARNIZIONE | TURNBUCKLE GASKET | TENDEUR GARNITURE | DICHTUNGSSPANNER | TENSOR JUNTA |
| 22 | G22505085 | FERMO ASSE IN LAMIERA | PLATE AXLE STOP | ARRET AXE EN TOLE | FESTSTELLVORRICHTUNG BLECHACHS | BLOQUEO EJE DE CHAPA |
| 23 | G15471930 | PROTEZIONE | GUARD | PROTECTION | SCHUTZ | PROTECCIN P |
| 24 | G17170270 | PROTEZIONE RINVIO SERBATOIO | INTERNAL TRANSMISS. TANK PROTE | PROTECTION RENVOI TREMIE | VORGELEGESCHUTZ BEH-LTER | PROTECCION ENVIO DEPOSITO |
| 25 | G20860086 | INGRANAGGIO 1/2 Z-12 F.Q. | GEAR 1/2 Z-12 F.Q. | ENGRENAGE 1/2 Z-12 TROUS CARRE | ZAHNRAD 1/2 Z-12 F.Q. | ENGRANAJE 1/2 Z-12 F.Q. |
| 26 | G20860088 | INGRANAGGIO 1/2 Z-12 F.T. | GEAR 1/2 Z-12 F.T. | ENGRENAGE 1/2 Z-12 TROUS RONDS | ZAHNRAD 1/2 Z-12 F.T. | ENGRANAJE 1/2 Z-12 F.T. |
| 27 | F06080196 | CATENA 1/2 ISO 083 32 MAGLIE | CUT-DOWN CHAIN .1/2 ISO 083 32 | TRONCON CHAINE 1/2 ISO 083 32 | KETTENLZNGE 1/2 ISO 083 32 GL | TRECHO CADENA 1/2 ISO 083 32 |
| 28 | G22230094 | SUPPORTO CUSCINETTO | BEARING SUPPORT | SUPPORT PALIER | LAGERBsCHSE | SOPORTE COJINETE |
| 29 | G14830390 | CUSCINETTO FORO QUADRO | SQUARE-HOLED BEARING | ROULEMENT AL+SAGE CARR+ | VIERKANTLAGER | COJINETE ORIFICIO CUADRADO |
| 30 | G66248207 | TENDICATENA SPAND. SP-520 | CHAIN TENSIONER | TENDEUR DE CHAINE EPAND. ENGR. | KETTENSPANNER DsNGERSTR. SP-52 | TENSOR DE CADENA ABON. SP-520 |
| 31 | F03011081 | GUARNIZIONI LABBRO DE100 | | | | |
| 32 | G66248121 | BOCCOLA CON FLANGIA M80 | BUSHING W/ FLANGE M80 | SUPPORT AVEC BRIDE M80 | BsCHSE MIT FLANSCH M80 | CASQUILLO CON BRIDA M80 |
| 33 | G66248218 | RONDELLA DISTAN.SPAND. | MAN. SPR. SPACER WASHER | RONDELLE ENTRETOISE EP. ENGRAI | ABSTANDSCHEIBE DsNGERSTREUER | ARANDELA DISTAN.ABONAD. |
| 34 | G65338043 | MOLLA COMP.ZN SERB. M80 | ZN TANK COMP.SPRING M80 | RESSORT COMPL. ZN RESERVOIR M8 | DRUCKFEDER ZN BEHZLTER M80 | MUELLE COMP.ZN DEPS. M80 A |
| 35 | G18701650 | RONDELLA FORO QUADRO ZN | WASHER 16,5X30X2,5 ZN | RONDELLE 16,5X30X2,5 ZN | UNTERLEGSCHEIBE 16,5X30X2,5 ZN | ARANDELA 16,5X30X2,5 ZN |
| 36 | G22220073 | RONDELLA 28X0,3X16,5 | WASHER 28X0-3X16-5 | RONDELLE 28X0-3X16-5 | UNTERLEGSCHEIBE 28X0-3X16-5 | ARANDELA 28X0-3X16-5 |
| 37 | G19003160 | TAPPO PER FORO D.7 | PLUG FOR D.7 HOLE | BOUCHON POUR TROU D.7 P | FROPFEN FsR LOCH D.7 T | APN PARA AGUJERO D.7 DO |
| 38 | G66248223 | TAPPO SUPP.SPAND.D.11 | PLUG MAN. SPR. SUPP. D.11 | BOUCHON SUPPORT EP. ENGRAIS D. | HALTERUNGSPFROPFEN DsNGERSTR. | TAPN SOPORTE ABON.D.11 D |
| 39 | F02100114 | SPINA E.P. 6X 30 U6873 C70 BR | ELASTIC PIN 6X30 | GOUJON ELASTIQUE 6X30 | SPANNHUELSE 6X30 | ESPINA ELASTICA 6X30 |
| 40 | F01070074 | VIT.A.4,2X1,41X 25 6954 4.8NI | BOLT 4-2X25 DIN 7981 | VIS 4-2X25 DIN 7981 | SCHRAUBE 4-2X25 DIN 7981 | TORNILLO 4-2X25 DIN 7981 |
| 41 | F01240012 | DADO M 6X 1 U5448 5.8 ZN | NUT 6 UNI 5448 5.8 ZN | ECROU 6 UNI 5448 5.8 ZN | MUTTER 6 UNI 5448 5.8 ZN | TUERCA 6 UNI 5448 5.8 ZN |
| 42 | F05150112 | MANIGLIA INTERAS. 117 FORO 8MM | HANDLE | POIGNEE | HANDGRIFF | MANILLA |
| 43 | F01020426 | VITE M 8X1,25X12 U5739 A2 IX | BOLT M8 X1,25X 12 U5739 8.8 IX | VIS M8 X1,25X 12 U5739 8.8 IX | SCHRAUBE M8 X1,25X 12 U5739 8. | TORNIL. M8 X1,25X 12 U5739 8.8 |
| 44 | F01200245 | DADO M 8X1,25 U5588 A2 IX | NUT M 8X1,25 U5588 6.8 IX | ECROU M 8X1,25 U5588 6.8 I | MUTTER M 8X1,25 U5588 6.8 | TUERCA M 8X1,25 U5588 6.8 |
| 45 | F01020462 | VITE M10X1,5 X20 U5739 A2 IX | BOLT M10X1,5 X 20 U5739 8.8 IX | VIS M10X1,5 X 20 U5739 8.8 IX | SCHRAUBE M10X1,5 X 20 U5739 8. | TORNIL. M10X1,5 X 20 U5739 8.8 |
| 46 | F01200271 | DADO M10X 1,5 U5588 A2 IX | NUT 10 5588 6.8 INOX | ECROU 10 5588 6.8 INOX | MUTTER 10 5588 6.8 INOX | TUERCA 10 5588 6.8 INOX |
| 47 | F01020463 | VITE M10X1,5 X25 U5739 A2 IX | SCREW 10X25 5739 INOX A2 | VIS 10X25 5739 INOX A2 | SCHRAUBE 10X25 5739 INOX A2 | TORNILLO 10X25 5739 INOX A2 |
| 48 | F01020434 | VITE M 8X1,25X16 U5739 A2 IX | BOLT M 8X1,25X 16 U5739 8.8 IX | VIS M 8X1,25X 16 U5739 8.8 IX | SCHRAUBE M 8X1,25X 16 U5739 8. | TORNIL. M 8X1,25X 16 U5739 8.8 |
| 49 | G20970140 | RONDELLA 20X2X8,5 | WASHER 20X2X8,5 | RONDELLE 20X2X8,5 | UNTERLEGSCHEIBE 20X2X8,5 | ARANDELA 20X2X8,5 |
| 50 | F01410034 | ROS.M6 6,4X12,5X1,6 U6592 IX | INOX A2 WASHER D6 UNI 6592 | RONDELLE D6 UNI 6592 INOX A2 | UNTERLEGSCHEIBE D6 UNI 6592 IN | ARANDELA D6 UNI 6592 INOX A2 |
| 51 | F01020043 | VITE M 6X 1X 60 U5737 8.8 ZN | BOLT 6 X60 5737 8.G GALVANIZED | VIS 6 X60 5737 8.G ZN | SCHRAUBE 6 X60 5737 8.G ZN | TORNILLO 6 X60 5737 8.G ZN |
| 52 | F01200233 | DADO M 6X 1 U5588 A2 IX | NUT M 6X 1 U5588 IX | ECROU M 6X 1 U5588 I | MUTTER M 6X 1 U5588 | TUERCA M 6X 1 U5588 |
| 53 | F01020419 | VITE M 6X1 X 16 U5739 A2 IX | BOLT M6 X1 X 16 U5739 8.8 IX | VIS M6 X1 X 16 U5739 8.8 IX | SCHRAUBE M6 X1 X 16 U5739 8. | TORNIL. M6 X1 X 16 U5739 8.8 |
| 54 | F01020068 | VITE M 8X1,25X40 U5737 8.8 ZN | | | | |

TAV. 70

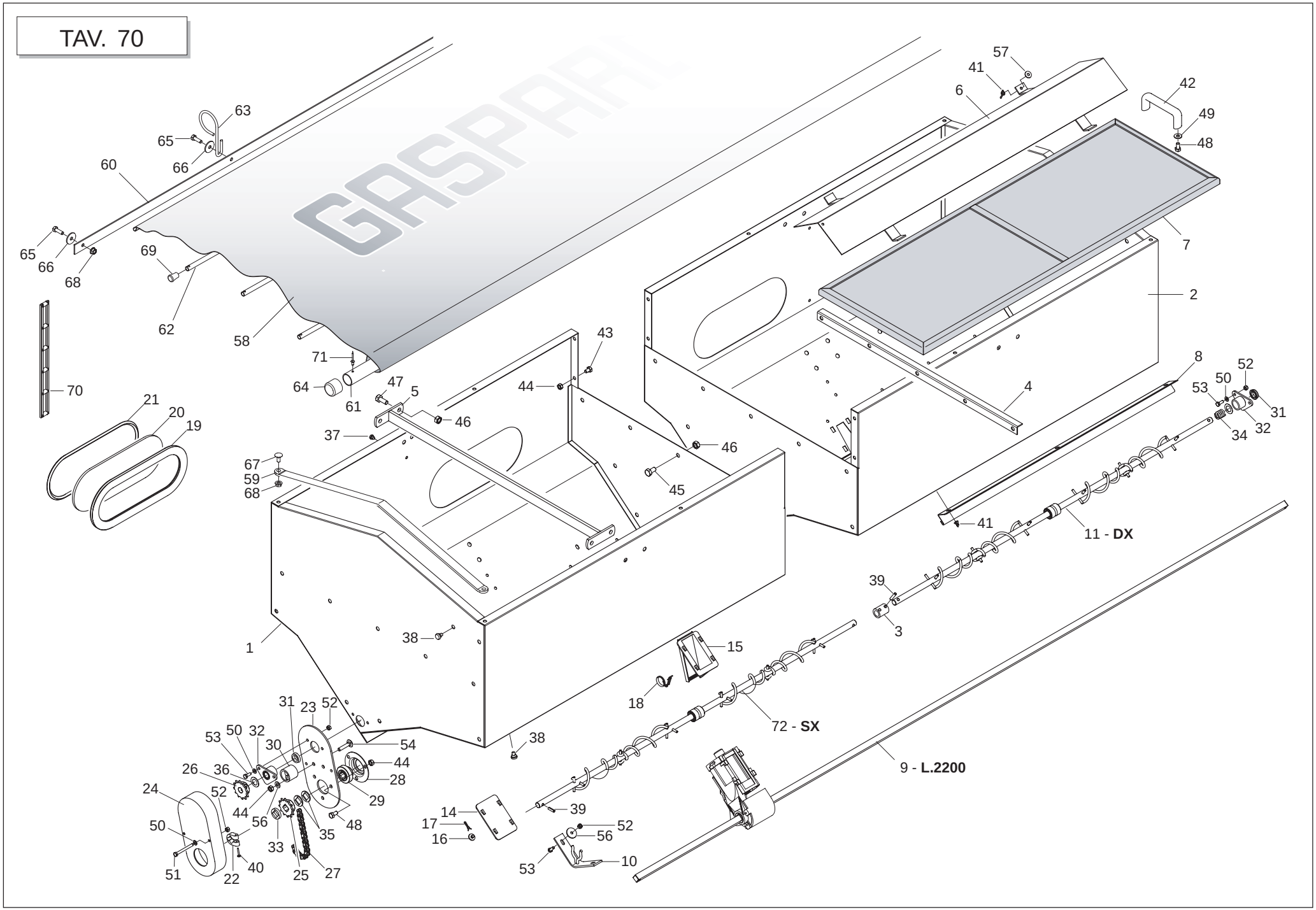
57
41
6
42
49
48
63
65
66
60
65
66
68
69
62
58
7
2
43
71
64
47
5
61
44
46
8
52
50
53
31
32
34
4
70
21
20
19
37
67
59
68
46
45
41
11 - DX
39
3
1
38
15
18
72 - SX
31
23
52
53
50
32
30
54
44
26
36
28
24
52
29
44
56
48
50
35
33
25
27
51
22
40
14
17
16
39
52
56
53
10
9 - L.2200

## *SERBATOI SPANDICONCIME*

TAV. 70

| Pos. | Cod. | Descrizione | Description | Description | Benennung | Descripcion |
|---|---|---|---|---|---|---|
| 55 | F01020398 | VITE M 6X 1X 12 U5739 8.8 ZN | BOLT M 6X12 | VIS M 6X12 | SCHRAUBE M 6X12 | TORNILLO M 6X12 |
| 56 | G20970125 | RONDELLA 28X2,5X6,5 | WASHER 28X2-5X6-5 | RONDELLE 28X2-5X6-5 | UNTERLEGSCHEIBE 28X2-5X6-5 | ARANDELA 28X2-5X6-5 |
| 57 | F01420039 | ROS.M6 6,4X 24X 2 U6593 IX | WASHER M6 6,4X24X2 U6593 IX | RONDELLE M6 6,4X24X2 U6593 IX | SCHEIBE M6 6,4X24X2 U6593 IX | ARANDELA M6 6,4X24X2 U6593 IX |
| 58 | G15275300 | TELO COPRISERBATOIO BBP METRO | | | | |
| 59 | G15273632 | SUPPORTO TELO COPRISERBATOIO | | | | |
| 60 | G15275310 | ASTA FISSAGGIO TELO BBP | | | | |
| 61 | G15275330 | TUBO TELO COPRISERBATOIO | | | | |
| 62 | G15275320 | TUBO RINFORZO TELO BBP | | | | |
| 63 | G65336131 | ANELLO TUBO ASPIR.SEMINATORE | SEED DRILL ASPIRATN. TUBE RING | BAGUE TUBE ASPIR. SEMEUR | SAUGROHRRING SZREIHE | ANILLO TUBO ASPIR.SEMBRADOR |
| 64 | G66248098 | TAPPO CONVOGLIATORE DEPR. SP | AIR PUMP CONVEYOR PLUG SP | BOUCHON CONVOYEUR TURBINE SP | VAKUUM FTRDERPFROPFEN SP | TAPN CONDUCTOR DEPR. SP D |
| 65 | F01020457 | VITE M8 X1,25X20 U5739 A2 IX | BOLT M8 X1,25X 20 U5739 8.8 IX | VIS M8 X1,25X 20 U5739 8.8 IX | SCHRAUBE M8 X1,25X 20 U5739 8. | TORNIL. M8 X1,25X 20 U5739 8.8 |
| 66 | F01420049 | ROS.M8 8,4X 32X 2 U6593 ZN | WASHER M8 8,4X32X2 U6593 ZG | RONDELLE M8 8,4X32X2 U6593 ZG | SCHEIBE M8 8,4X32X2 U6593 ZG | ARANDELA M8 8,4X32X2 U6593 ZG |
| 67 | F01060040 | BUL.M 8X1,25X 20 U5732 4.6 ZG | BOLT 8 X20 5732 4.6 GALVANIZED | VIS 8 X20 5732 4.6 ZN | SCHRAUBE 8 X20 5732 4.6 ZN | TORNILLO 8 X20 5732 4.6 ZN |
| 68 | F01260043 | DADO FLANG.M8 D6923 8.8 ZN | FLANGE NUT M8 DIN 6923 8.8 GAL | ECROU BRIDE .M8 DIN 6923 8.8 Z | GEFLANSCHTE MUTTER M8 DIN6923 | TUERCA BRIDA M8 DIN 6923 8.8 Z |
| 69 | F05150472 | PUNTALE A CAMPANA PVC NERO D10 | PVC TIP D.10 | EMBOUT PVC D. 10 | STTSSELSCHAFT PVC D.10 | PUNTAL PVC D.10 |
| 70 | F06080487 | CATENA AGGANCIO TELO IN GOMMA | RUBBER FRAME CONNECTION CHAIN | CHA+NE ACCROCHAGE TOILE EN CAO | KETTE BEFESTIGUNG GUMMITUCH | CADENA ENGANCHE LONA DE CAUCHO |
| 71 | F02250123 | RIVETTO STR. 4,8X 9 U9200A AL | PULL RIVET 4,8X 9 U9200A ALL | RIVET A RUPTURE 4,8X 9 U9200A | REISSNIETE 4,8X 9 U9200A ALL | REMACHE DESGAR. 4,8X 9 U9200A |
| 72 | G15273610 | ASSE AGITAT.SERBAT.UNICO COMPL | STIRRER SPINDLE BB300 TANK | AXE AGITATEUR RESERVOIR BB300 | SAMENMISCHERACHSE BEH. BB300 | EJE AGITAD. DEPS. BB300 |

# TAV. 81

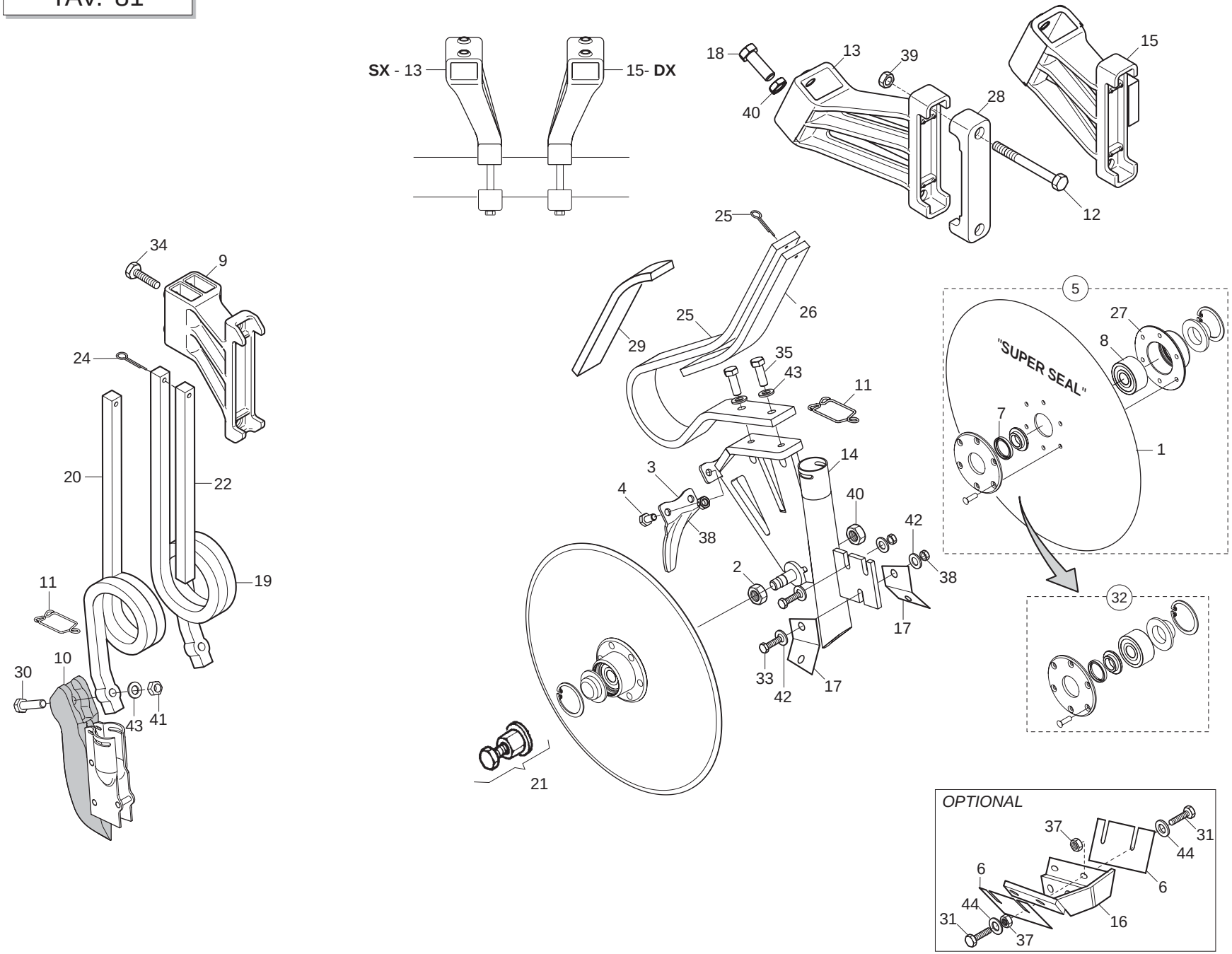




GASPARDO

## *ELEMENTI DI CONCIMAZIONE*

TAV. 81

| Pos. | Cod. | Descrizione | Description | Description | Benennung | Descripcion |
|---|---|---|---|---|---|---|
| 1 | G13825091 | DISCO ASSOLCATORE D.373 | FURROW OPENER DISK D.373 | DISQUE D. 373 6 T.D.6 | SCHEIBE SZSCHARENREISSER D.373 | DISCO SURCADOR D.373 |
| 2 | G15220540 | DADO M16X1,5 SX | NUT M16X1-5 LEFT | ECROU M16X1-5 GCH | MUTTER M16X1-5 LI | TUERCA M16X1-5 IZQ |
| 3 | G15225860 | PROTEZIONE DISCHI | DISC PROTECTION | PROTECTION DISQUE | DISCSCHUTZ | PROTECCIN DISCO |
| 4 | F01020470 | VITE M10X 1,5X20 U5739 8.8 ZN | BOLT M 10X20 | VIS M 10X20 | SCHRAUBE M 10X20 | TORNILLO M 10X20 |
| 5 | G15225500 | DISCO ASSOLC.PROTETTO COMPL. | COMPL. PROTECTED DISC COULTER | DISQUE DU SOC PROT+G+ COMPLET | GESCH_TZTE FURCHENFORMSCHEIBE | DISCO SURC.PROTEGIDO COMPL. |
| 6 | G15422231 | RASCHIATERRA DISCO | | | | |
| 7 | F03011075 | AN. TENUTA B1OF 24X32X4 | SEALING RING G24X32X4 | BAGUE D'ETANCHEITE G24X32X4 | DICHTRING G24X32X4 | ANILLO AISLADOR G24X32X4 |
| 8 | F04010084 | CUSC.D17D47 B22,2 3303 LLU/DDU | BEARING 3303 2RS | PALIER 3303 2RS | LAGER 3303 2RS | COJINETE 3303 2RS |
| 9 | G19203920 | SUPP.MOLLA QUADRA DOPPIA POS. | | | | |
| 10 | G16670600 | FALCIONE ELEM.CONCIMAZ.QUADRA | BASIC SQUARE FERTILIZATION COU | SOC +LEM. FERTILIS. RESSORT CA | S-SCHAR ELEM.D_NGUNG QUADR.FED | BOTA ELEM.ABONAD.MUELLE CUADRA |
| 11 | G18903911 | MOLLA FERMO TUBO D.35 | PIPE LOCK SPRING D.35 | RESSORT ARR-T TUBE D.35 | ROHRSPERRFEDER D.35 | MUELLE TOPE TUBO D. 35 |
| 12 | F01020236 | VITE M14X 2X220 U5737 8.8 BR | SCREW M14X2X220 U5737 8.8 BR | VIS M14X2X220 U5737 8.8 BR | SCHRAUBE M14X2X220 U5737 8.8 | TORNILLO M14X2X220 U5737 8.8 |
| 13 | G19204110 | | | | | |
| 14 | G16670271 | SUPPORTO DISCHI CONCIMAZ. | | | | |
| 15 | G19204100 | SUPP.DX MOLLA DISCHI | | | | |
| 16 | G15472290 | SUPPORTO RASCHIAT.DISCHI CONC. | MANURE DISKS SOIL SCRAPER SUPP | SUPP. RACLEUR DISQUES FUMAGE | HALTER. ERDSCHABER DsNGUNGSSCH | SOPORTE RASCADOR DISCOS ABONO |
| 17 | G15472301 | RASCHIATERRA INTERNO | | | | |
| 18 | F01020568 | VITE M16X 2X45 U5739 8.8 ZN | BOLT M 16X 2X45 U5739 8.8 ZG | VIS M 16X 2X45 U5739 8.8 ZG | SCHRAUBE M 16X 2X45 U5739 8.8 | TORNILLO M16X 2X45 U5739 8.8 |
| 19 | G18902770 | MOLLA CONCIMAZIONE 20X20 DX | RIGHT MANURING SPRING 20X20 | RESSORT FUMAGE 20X20 DRT | FEDER DsNGUNG 20X20 RE | MUELLE ABONO 20X20 DER |
| 20 | G18902780 | MOLLA CONCIMAZIONE 20X20 SX | LEFT MANURING SPRING 20X20 | RESSORT FUMAGE 20X20 GCH | FEDER DsNGUNG 20X20 LI | MUELLE ABONO 20X20 IZQ |
| 21 | G15225240 | ESTRATTORE DISCHI ELEMENTO MT | SEED PLATE EXTRACTOR ELEM. MT | EXTRACTEUR DISQUE ELEMENT MT | SCHEIBENAUSZIEHER ELEMENT MT | EXTRACTOR DISCOS ELEMENTO MT |
| 22 | G18903200 | FERMO SPIRALE | SPIRAL STOP | ARRET SPIRALE | FESTSTELLVORRICHTUNG SPIRALE | BLOQUEO ESPIRAL |
| 23 | G18903210 | MOLLA CONCIM.FILE DISPARI | ODD NUMBER ROW MANUR.SPRING | RESS. FUMAGE RANGEES IMPAIRES | FEDER DsNGUNG UNGERADE REIHEN | MUELLE ABONO FILAS IMPARES |
| 24 | F02200229 | COPIGLIA 5X 45 U1336 ZN | SPLIT PIN 5 X45 1336 GALVAN. | GOUPILLE 5 X45 1336 ZN | SPLINT 5 X45 1336 ZN | PASADOR 5 X45 1336 ZN |
| 25 | F02200228 | COPIGLIA 5X 35 U1336 ZN | SPLIT PIN 5 X35 1336 GALVAN. | GOUPILLE 5 X35 1336 ZN | SPLINT 5 X35 1336 ZN | PASADOR 5 X35 1336 ZN |
| 26 | G18903901 | RINFORZO MOLLA CONCIMAZIONE | | | | |
| 27 | G15223651 | SUPPORTO CUSCINETTO DISCO | DISK BEARING SUPPORT | SUPPORT PALIER DISQUE | SCHEIBENLAGERBsCHSE | SOPORTE COJINETE DISCO |
| 28 | G19204030 | SCONTRO FISS.150 2F D15 | | | | |
| 29 | G16670630 | SPESSORE MOLLA DISCHI CONCIM. | SHIMS | CALE | ZWISCHENLEGSCHEIBE | ESPACIADOR |
| 30 | F01020156 | VITE M12X1,75X50 U5737 8.8 ZN | BOLT12X50 5737 8.G GALVANIZED | VIS 12X50 5737 8.G ZN | SCHRAUBE 12X50 5737 8.G ZN | TORNILLO 12X50 5737 8.G ZN |
| 31 | F01020403 | VITE M 6X 1X 16 U5739 8.8 ZN | BOLT M 6X16 | VIS M 6X16 | SCHRAUBE M 6X16 | TORNILLO M 6X16 |
| 32 | G15226600 | KIT X DISCO SUPER SEAL | | | | |
| 33 | F01020476 | VITE M10X 1,5X30 U5739 8.8 ZN | BOLT M 10X30 | VIS M 10X30 | SCHRAUBE M 10X30 | TORNILLO M 10X30 |
| 34 | F01020508 | VITE M12X1,75X25 U5739 8.8 ZN | BOLT M 12X25 | VIS M 12 X 25 | SCHRAUBE M 12 X 25 | TORNILLO M 12 X 25 |
| 35 | F01020512 | VITE M12X1,75X35 U5739 8.8 ZN | SCREW M 12X35 | VIS M 12X35 | SCHRAUBE M 12X35 | TORNILLO M 12X35 |
| 36 | F01020514 | VITE M12X1,75X40 U5739 8.8 ZN | BOLT M12X1,75X40 | VIS M12X1,75X40 | SCHRAUBE M12X1,75X40 | TORNILLO M12X1,75X40 |
| 37 | F01200232 | DADO M 6X 1 U5588 6.8 ZN | | | | |
| 38 | F01200270 | DADO M10X 1,5 U5588 6.8 ZN | NUT M10 | ECROU M10 | MUTTER M10 | DADO M10 |
| 39 | F01200306 | DADO M14X 2 U5588 6.8 ZN | NUT M14X2 | ECROU M14X2 | MUTTER M14X2 | DADO M14X2 |
| 40 | F01200442 | DADO M16X 1,5 U5589 6.8 ZN | NUT 16X1-5 UNI 5589 6.8 GALVAN | ECROU 16X1-5 UNI 5589 6.8 ZN | MUTTER 16X1-5 UNI 5589 6.8 ZN | TUERCA 16X1-5 UNI 5589 6.8 ZN |
| 41 | F01220048 | DADO M12X1,75 D980 8 ZN | SELF LOCKING NUT M12X1,75 980V | ECROU AUTOBL. M12X1,75 980-V | SIEHE 00553312 | DADO AUTOBL. M12X1,75 980-V |
| 42 | F01410064 | ROS.M10 10,5X 20X 2 U6592 ZN | WASHER 10,5X21 | RONDELLE 10,5X21 | SCHEIBE 10,5X21 | ARANDELA 10,5X21 |
| 43 | F01410076 | ROS.M12 13X 24X2,5 U6592 ZN | PLANE WASHER D12 UNI 6592 ZN | RONDELLE D12 UNI 6592 ZN | SCHEIBE D12 UNI 6592 ZN | ARANDELA D12 UNI 6592 ZN |
| 44 | F01420036 | ROS.M6 6,4X 18X 2 U6593 ZN | FLAT WASHER 6-6X 18X2 6593 ZN | ROND. PLATE 6-6X 18X2 6593 ZN | SCHEIBE 6-6X 18X2 6593 ZN | ARAND. PLANA 6-6X 18X2 6593 ZN |

TAV. 90

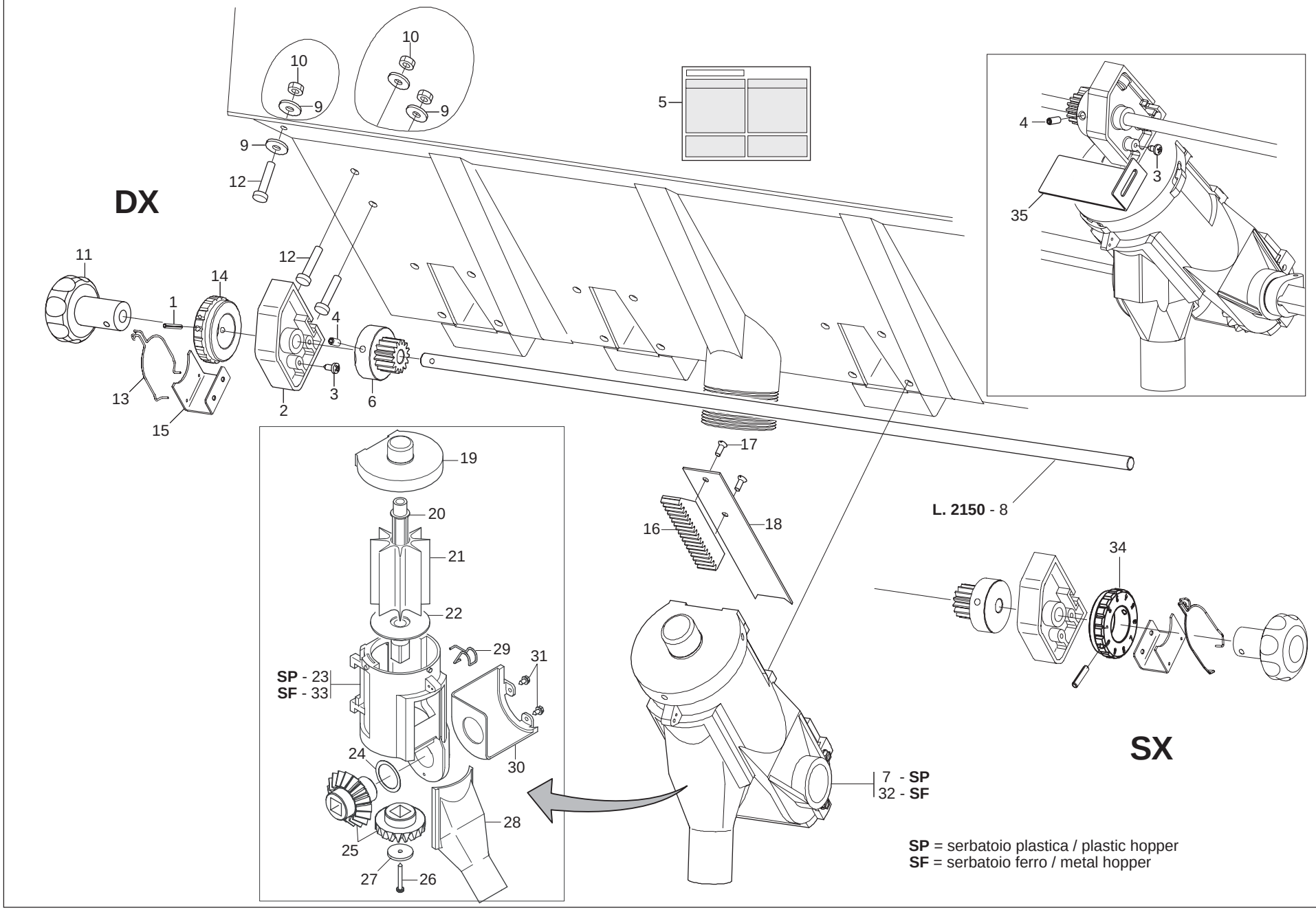




GASPARDO

## *REGOLAZIONE CENTRALIZZATA "SPEEDY SET"*

TAV. 90

| Pos. | Cod. | Descrizione | Description | Description | Benennung | Descripcion |
|---|---|---|---|---|---|---|
| 1 | F02100066 | SPINA E.P. 4X 36 U6873 C70 BR | | | | |
| 2 | G19003660 | SUPPORTO | SUPPORT | SUPPORT | HALTERUNG | SOPORTE |
| 3 | F01070061 | VIT.A.3,9X1,34X 9,5 6954 4.8NI | | | | |
| 4 | F01050083 | VIT.M 5X 0,8X 12 U5927 A2 IX | | | | |
| 5 | G19702951 | DECAL.TAB.DISTRIB.SPEEDY-SET | SPEEDY-SET DISTRIB. CHART STI | DECALC.TABLEAU DISTRIB. SPE.-S | ABZIEHB. TAB.APPARAT SPEEDY-SE | CAL.TABLA DISTRIB. SPEEDY-SET |
| 6 | G19003680 | INGRANAGGIO Z.15 | GEAR Z 15 | ENGRENAGE Z 15 | ZAHNRAD Z 15 | ENGRANAJE Z 15 |
| 7 | G16670040 | DISTR.COMPL.8PALE SPEEDY SET P | COMPL.PLA.SPEEDY SET DISTR.8R | MINIMAX COMPL 8C PLA SPEEDYSET | KOMPL.DOSIER.SPEEDY SET PLA.8S | DISTR.COMP.SPEEDY SET PLA.8AL. |
| 8 | G15275350 | ASSE D.10X 2150 | | | | |
| 9 | F01420038 | ROS.M6 6,4X 18X 2 U6593 IX | WASHER M6 6,4X18X2 U6593 IX | RONDELLE M6 6,4X18X2 U6593 IX | SCHEIBE M6 6,4X18X2 U6593 IX | ARANDELA M6 6,4X18X2 U6593 IX |
| 10 | F01200233 | DADO M 6X 1 U5588 A2 IX | NUT M 6X 1 U5588 IX | ECROU M 6X 1 U5588 I | MUTTER M 6X 1 U5588 | TUERCA M 6X 1 U5588 |
| 11 | G19003670 | MANOPOLA SPEEDY SET | SPEEDY HANDLE SET | POIGN+E SPEEDY SET | GRIFF SPEEDY SET | EMPUĐADURA SPEEDY SET |
| 12 | F01020419 | VITE M 6X1 X 16 U5739 A2 IX | BOLT M6 X1 X 16 U5739 8.8 IX | VIS M6 X1 X 16 U5739 8.8 IX | SCHRAUBE M6 X1 X 16 U5739 8. | TORNIL. M6 X1 X 16 U5739 8.8 |
| 13 | G65336055 | MOLLA SPEC.REGOL.SPAND. SP | SPEC SPRING MAN. SPR. ADJUSTM. | RESSORT SPEC. REGL. EP. ENTRAI | SPEZIALFEDER STREUEREINSTELLUN | MUELLE ESPEC. REGUL. ABONADORA |
| 14 | G19003720 | GHIERA REGOLAZIONE SX | LEFT ADJUSTMENT KNURLED NUT | MANCHON DE REGLAGE GCH | EINSTELLMUTTER LINKS | ROSCA REGULACION IZQUIERDA |
| 15 | G16670140 | SUPPORTO MOLLA REGOLATORE | REGULATOR SPRING SUPPORT | SUPPORT RESSORT R+GULATEUR | HALTERUNG EINSTELLFEDER | SOPORTE MUELLE REGULADOR |
| 16 | G19003690 | CREMAGLIERA | RACK | CR+MAILL+RE | ZAHNSTANGE | CREMALLERA |
| 17 | F01080032 | VITE M 4X 0,7X10 U7688 A2 IX | SCREW M4X 0,7X10 U7688 A2 IX | VIS M4X 0,7X10 U7688 A2 IX | SCHRAUBE M4X 0,7X10 7688 A2 IX | TORNILLO M4X0.7X10 U7688 A2 IX |
| 18 | G16670100 | REGOLATORE APERTURA | OPENING REGULATOR | REGULATEUR OUVERTURE | TFFNUNGSEINSTELLER | REGULADOR ABERTURA |
| 19 | G19003700 | COPERCHIO SPEEDY SET | COVER SPEEDY SET | COUVERCLE SPEEDY SET | DECKEL SPEEDY SET | TAPA SPEEDY SET |
| 20 | G66248173 | ASSE DISTR.SPAND. SP | MANURE SPREADER DISTR. SPINDLE | AXE DISTRIBUTEUR EP.ENGRAIS SP | ACHSE SZAPPARAT STREUER SP | EJE DISTR. ABON. SP |
| 21 | G66248172 | DOSATORE DISTR.SPAND. SP | MAN.SPR. SEED METERING DEVICE | DOSEUR DISTRIBUTEUR EP. ENGRAI | DOSIERER DsNGERSTREUER. SP | DOSIFICADOR DISTR.ABON. SP |
| 22 | G66248211 | PERNO RONDELLA FUSA SPAND. SP | MAN. SPR. CAST WASHER PIN. SP | PIVOT RONDELLE MOULEE EP. ENGR | ZAPFEN LOSE UNTERLEGSCHEIBE ST | PERNO ARANDELA FUNDIDA ABONAD |
| 23 | G19002920 | CORPO DISTRIBUTORE SPANDI PLA. | PLA. F.SPREADER DISTRIB.CASING | CORPS DISTRIBUTEUR EPAND. | VERTEILUNGSKTRPER STREUER PLA. | CUERPO DIST. ABONADORA PLæS. |
| 24 | G18701500 | RONDELLA 29,5 X38 X0,3 | WASHER 29,5 X 38 X 0,3 | RONDELLE 29,5 X38 X0,3 | UNTERLEGSCHEIBE 29,5X38X0,3 | ARANDELA 29,5 X38 X0,3 |
| 25 | G20860126 | KIT INGR DISTR CONCIME (2+2) | KIT- MAN. DISTR. GEARS | COUPLE CON DISTR ENGRAIS (2+2) | KIT ZAHNRZDER DsNGERSTREUER | SET ENGRANAJES DISTRIB. ABONO |
| 26 | F01070075 | VIT.A.4,2X1,41X 38 6954 4.8NI | BOLT 4-2X38 DIN 7981 | VIS 4-2X38 DIN 7981 | SCHRAUBE 4-2X38 DIN 7981 | TORNILLO 4-2X38 DIN 7981 |
| 27 | G20970097 | RONDELLA 32X3X4,5 | WASHER 32X3X4-5 | RONDELLE 32X3X4-5 | UNTERLEGSCHEIBE 32X3X4-5 | ARANDELA 32X3X4-5 |
| 28 | G66248178 | SCIVOLO DISTR.SPAND. SP | CHUTE- MANURE-SPREADER DISTRIB | LANCOIR DISTRIBUTION EP. ENGR. | DsNGERSTREUER RUTSCHE SP | PLANO INCLINADO DISTR. ABON. S |
| 29 | G65336062 | MOLLA SPEC.SCIV.DISTR.SPAND.SP | SPEC SPRING - MAN. SPR. DISTR. | RESS. SPEC. LANCOIR DISTR. EP. | SPEZ.FEDER RUTSCHE SZAPP. STRE | MUELLE ESPEC.PLANO INCL.DISTR. |
| 30 | G19002850 | PROTEZIONE PIGNONE | PINION GUARD | PROTECTION PIGNON | RITZELSCHUTZ | PROTECCIN PI¾N PR |
| 31 | F01070011 | VIT.A.4,2X1,41X 9,5 6950 4.8NI | BOLT- SELF-TAPPING 4-2X9-5T.E. | VIS AUTOTAR. 4-2X9-5 T. E. COU | SELBSTSCHNEID. SCHRAUBE 4-2X9- | TORNILLO AUTORROSC. 4-2X9-5 |
| 32 | G13722330 | DISTR.COMPL.8PALE SPEEDY SET F | COMPL.SPEEDY 8-BLADE DISTR. SE | DISTR.COMPL.8PALETTES SPEEDY S | SAATGUTAUS.8SCH.KOMPL.SPEEDY S | DISTR.COMPL.8PALETAS SPEEDY SE |
| 33 | G66248176 | CORPO DISTR.SPAND. SP | MANURE SPREADER DISTR. CASING | CORPS DISTRIB. EP. ENGRAIS SP | VERTEILUNGSKTRPER STREUER SP | CUERPO DISTR. ABON. SP |
| 34 | G19003710 | GHIERA REGOLAZIONE DX | RIGHT ADJUSTMENT KNURLED | BAGUE REGLAGE DROITE | EINSTELLMUTTER RE | CONTRATUERCA REGULACIN DER. |
| 35 | G17120340 | LAMA BLOCCO CREMAGL.MINIMAX | | | | |

TAV. 100

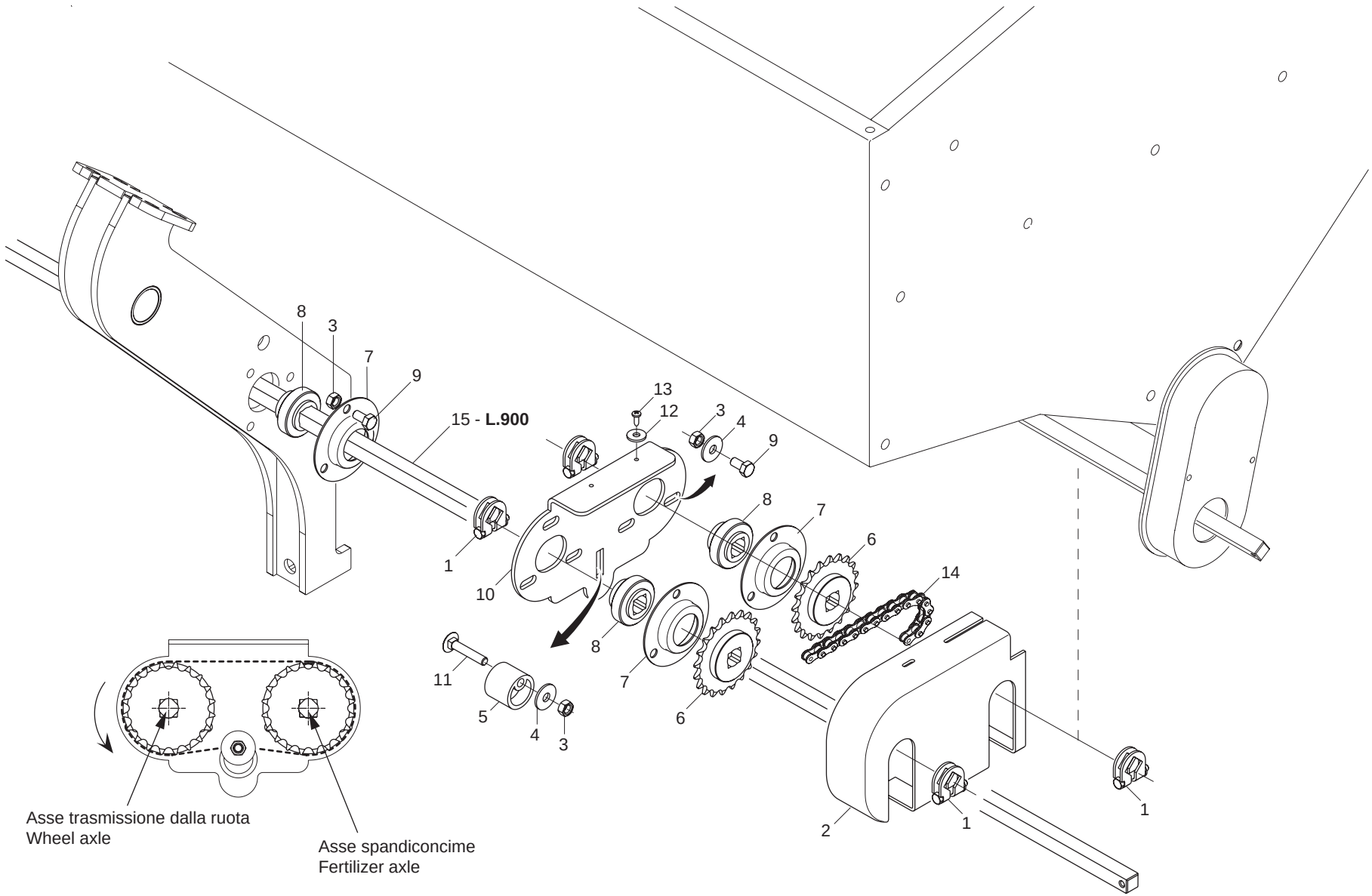




GASPARDO

## *TRASMISSIONE SPANDICONCIME*

TAV. 100

| Pos. | Cod. | Descrizione | Description | Description | Benennung | Descripcion |
|---|---|---|---|---|---|---|
| 1 | G22505085 | FERMO ASSE IN LAMIERA | PLATE AXLE STOP | ARRET AXE EN TOLE | FESTSTELLVORRICHTUNG BLECHACHS | BLOQUEO EJE DE CHAPA |
| 2 | G15275710 | CARTER | | | | |
| 3 | F01200244 | DADO M 8X1,25 U5588 6.8 ZN | NUT M8 | ECROU M8 | MUTTER M8 | DADO M8 |
| 4 | F01420048 | ROS.M8 8,4X 24X 2 U6593 ZN | PLANE WASHER D.8 | RONDELLE D.8 | SCHEIBE D.8 | ARANDELA D.8 |
| 5 | G66248207 | TENDICATENA SPAND. SP-520 | CHAIN TENSIONER | TENDEUR DE CHAINE EPAND. ENGR. | KETTENSPANNER DsNGERSTR. SP-52 | TENSOR DE CADENA ABON. SP-520 |
| 6 | G22250007 | INGR.CON MOZZO 1/2 Z-20 SV | GEARS- W/ HUB 1/2 Z-20 SV | ENGRENAGE 1/2 Z-20 | ZAHNRAD MIT NABE 1/2 Z-20 SV | ENGRAN.CON PERNO 1/2 Z-20 SV |
| 7 | G22230094 | SUPPORTO CUSCINETTO | BEARING SUPPORT | SUPPORT PALIER | LAGERBsCHSE | SOPORTE COJINETE |
| 8 | G14830390 | CUSCINETTO FORO QUADRO | SQUARE-HOLED BEARING | ROULEMENT AL+SAGE CARR+ | VIERKANTLAGER | COJINETE ORIFICIO CUADRADO |
| 9 | F01020432 | VITE M 8X1,25X16 U5739 8.8 ZN | BOLT M 8X16 | VIS M 8X16 | SCHRAUBE M 8X16 | TORNILLO M 8X16 |
| 10 | G15275340 | SUPPORTO TRASMISSIONE SPANDI | | | | |
| 11 | F01060047 | BUL.M 8X1,25X 45 U5732 4.6 ZN | BOLT 8X45 5732 4.6 GALVANIZED | VIS 8X45 5732 4.6 ZN | SCHRAUBE 8X45 5732 4.6 ZN | TORNILLO 8X45 5732 4.6 ZN |
| 12 | F01420011 | ROS.M4 4,3X 16X 1 U6593 ZN | FLAT WASHER 4-3X 16X1-5 6593 G | ROND.PLATE 4-3X 16X1-5 6593 ZN | SCHEIBE 4-3X 16X1-5 6593 ZN | ARAND. PLANA 4-3X 16X1-5 6593 |
| 13 | F01070078 | VIT.A.4,2X1,41X 9,5 6950 4.8ZN | SELFTHREADING BOLT 4,2X13 TE | VIS AUTOTARADEUSE.4-2X13 TE | SELBSTSCHNEID. SCHRAUBE 4-2X13 | TORNILLO AUTOR.4-2X13 TE |
| 14 | F06080009 | CATENA 1/2 ISO 083 41 MAGLIE | | | | |
| 15 | G23440538 | ASSE TRASM.CENTR.MT.0,90 HL/ID | AXLE- CENTRAL GEARBOX MT. 0.9 | AXE ENTRAINEMENT CENTR. M. 0-9 | ACHSE MITTELANTRIEB MT.0-90 HL | EJE TRANS.CENTR.MT.0-90 HL/ID |

# TAV. 120

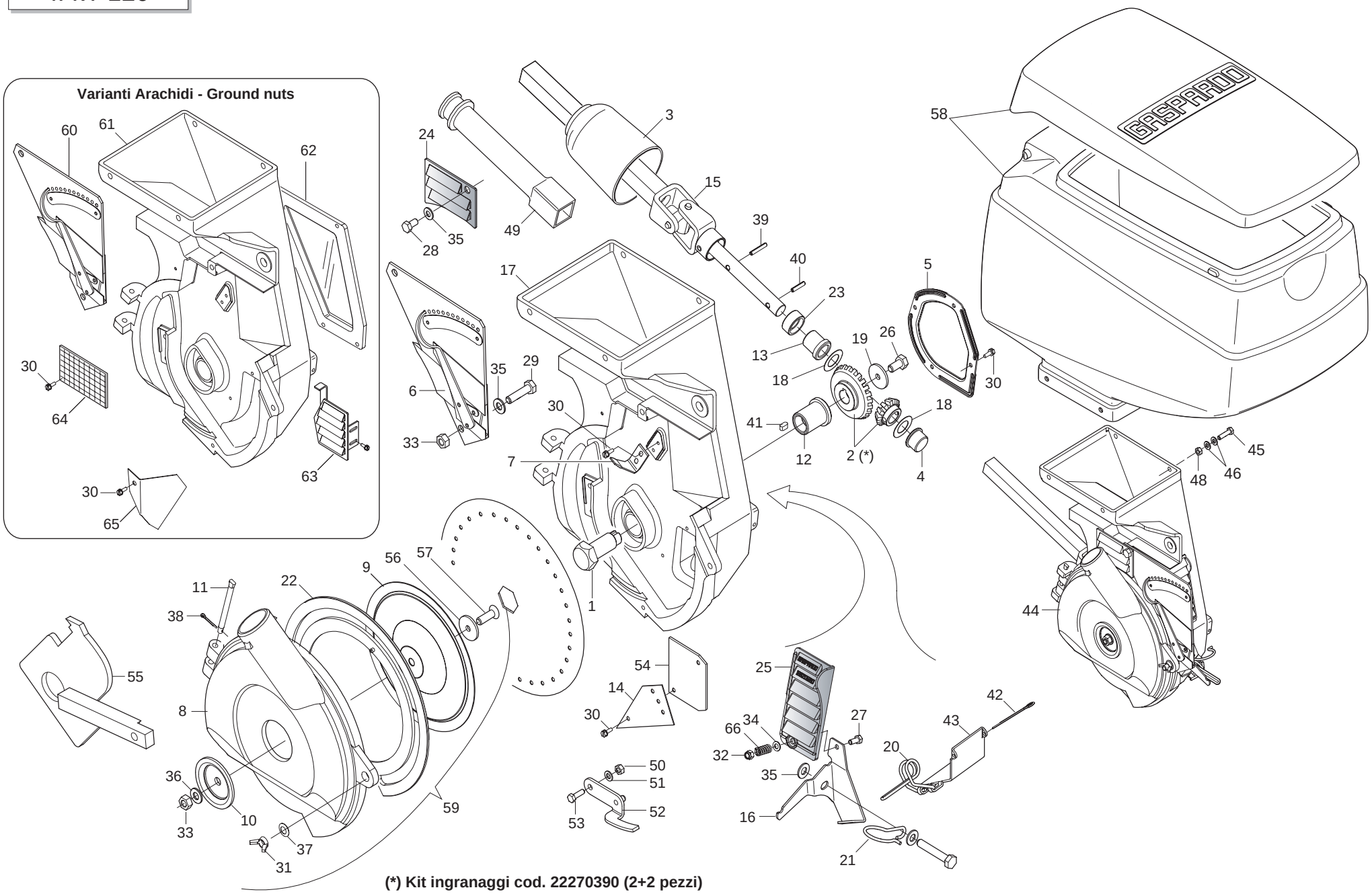


**(*) Kit ingranaggi cod. 22270390 (2+2 pezzi)**

## *DISTRIBUTORE SEMI "MT"*

TAV. 120

| Pos. | Cod. | Descrizione | Description | Description | Benennung | Descripcion |
|---|---|---|---|---|---|---|
| 1 | G22230046 | ASSE TRASMISSIONE DISCO | DISK GEAR AXLE | AXE ENTRAINEMENT DISQUE | ACHSE SCHEIBENANTRIEB | EJE TRANSMISIN DISCO A |
| 2 | G22270390 | KIT COPPIA CONICA DISTRIB.SEMI | KIT- SEED DISTR. CONICAL PAIR | COUPLE CON DISTR GRAINES (2+2) | KIT KEGELTRIEB SAMEN SZAPPARAT | SET PAR CONICO DISTRIB. SEMILL |
| 3 | G66248094 | COPRICARDANO SP | UNIVERSAL JOINT COVER SP | COUVRE-CARDAN SP | KARDANABDECKUNG SP | CUBRECARDæN SP |
| 4 | G66349008 | BOCCOLA | BUSHING | BOITE | BsCHSE | CASQUILLO |
| 5 | G22230035 | COPERCHIO SCATOLA INGRAN. | GEARWHEEL BOX COVER | COUVERCLE BOITE ENGRENAGE | DECKEL ZAHNRZDERGEHZUSE | TAPA CAJA ENGRAN. |
| 6 | G22230040 | SELETTORE MOBILE COMPLETO | MOBILE SELECTOR ASSY. | SELECTEUR MOBILE COMPL. | KOMPL. BEWEGLICHER WZHLER | SELECTOR MVIL COMPLETO S |
| 7 | G22230041 | SELETTORE FISSO | SELECTOR FIXED | SELECTEUR FIXE | FESTER WZHLER | SELECTOR FIJO |
| 8 | G15223701 | COPERCHIO CORPO MT | BODY COVER MT | COUVERCLE CORPS MT | DECKEL KTRPER MT | TAPA CUERPO MT |
| 9 | G22230037 | TENUTA GUARNIZIONE | SEAL | BLOQUAGE GARNITURE | DICHTUNG | JUNTA ESTANCA |
| 10 | G16620470 | TAPPO CENTRALE H=7,5 | CENTRAL PLUG H=7.5 | BOUCHON CENTRAL H=7,5 | ZENTRALER PFROPFEN H=7,5 | TAPËN CENTRAL H=7,5 |
| 11 | G22230039 | PERNO COPERCHIO | COVER PIN | PIVOT COUVERCLE | DECKELZAPFEN | PERNO TAPA |
| 12 | G66349002 | BOCCOLA SINT.BASSOFONDO | BUSHING- SINTERED | BOITE FRITTEE | SYNTH. B_CHSE | CASQUILLO SINT. |
| 13 | G22270071 | BOCCOLA COLL.SINTER.20X24 | 20X24 SINTERED COLLARED BUSH | BOITE COLLIER FRITTEE 20X24 | ANSCHLUSSBUECHSE SINTER.20X24 | CASQUILLO CONEX. SINTER.20X24 |
| 14 | G22270204 | PIASTRA ANTI TRABOCC.SEMI SP | SEED ANTI-OVERFLOW PLATE SP | PLAQUE ANTI-DEBORD.T GRAINES S | SAMENsBERLAUFPLATTE SP | PLACA ANTI DESBORDAMIENTO SEMI |
| 15 | G15225130 | ASSE PORTA PIGNONE MT COMPL. | COMPL. MT PINION-HOLDER SHAFT | AXE PORTE-PIGNON MT COMPLET | RITZELTRAGACHSE MT KOMPL. | EJE PORTA PIÐËN MT COMPL. |
| 16 | G15421151 | FERMO MOLLA FALCIONE | CUTTER SPRING STOP | ARRET RESSORT HACHOIR | FESTSTELLVOR. FEDER FUTTERSCHN | BLOQUEO MUELLE GUADA¾ADORA |
| 17 | G15225120 | CORPO DI DISTRIBUZIONE MT | MT DISTRIBUTION ASSEMBLY | CORPS DE DISTRIBUTION MT | STREUBEH-LTER MT | ELEMENTO DE DISTRIBUCIËN MT |
| 18 | G22220073 | RONDELLA 28X0,3X16,5 | WASHER 28X0-3X16-5 | RONDELLE 28X0-3X16-5 | UNTERLEGSCHEIBE 28X0-3X16-5 | ARANDELA 28X0-3X16-5 |
| 19 | F01420037 | ROS.M6 6,4X 24X 2 U6593 ZG | WASHER 6,6X24X2 6593 ZN | RONDELLE 6,6X24X2 6593 ZN | UNTERLEGSCHEIBE 6,6X24X2 6593 | ARANDELA 6,6X24X2 6593 ZN |
| 20 | G18902951 | MOLLA SPEC.ZN SCARICO | SPEC SPRING ZN DISCHARGE | RESSORT TRAPPE VIDANGE | SPEZIALFEDER ZN ENTLADUNG | MUELLE ESPEC. ZN DESCARGA |
| 21 | G18903180 | MOLLA CONVOGLIATORE MICRO | MICRO CONVEYOR SPRING | RESSORT CONVOYEUR MICRO | FEDER MIKRO FTRDERER | MUELLE CONDUCTOR MICRO |
| 22 | G19002620 | GUARNIZIONE COP.DISTR.SP530-MT | DISTR. COVER GASKET.SP530 | JOINT ETANCH PORTE SP530-MT | DICHTUNG SZAPPARATDECKEL SP530 | JUNTA TAPA DISTRIB.SP530 |
| 23 | G66248219 | ANELLO PARAPOLVERE SP-520 | DUST COVER RING | BAGUE PARE-POUSSIERE SP-520 | STAUBSCHUTZRING SP-520 | ANILLO GUARDAPOLVO SP-520 |
| 24 | G16620540 | PORTA DI PROTEZIONE | SAFETY HATCH | PORTE DE PROTECTION | SCHUTZÍFFNUNG | PUERTA DE PROTECCIËN |
| 25 | G16620530 | PORTA DI CONTROLLO | INSPECTION DOOR | PORTE CONTROLE | KONTROLLTsR | PUERTA DE CONTROL |
| 26 | F01020403 | VITE 6 X16 5739 8.G ZN | BOLT M 6X16 | VIS M 6X16 | SCHRAUBE M 6X16 | TORNILLO M 6X16 |
| 27 | F01020382 | VITE M 5X0,8X 25 U5739 8.8 ZG | BOLT 5 X25 5739 8.G GALVANIZ. | VIS 5 X25 5739 8.G ZN | SCHRAUBE 5 X25 5739 8.G ZN | TORNILLO 5 X25 5739 8.G ZN |
| 28 | F01020432 | VITE 8 X16 5739 8.G ZN | BOLT M 8X16 | VIS M 8X16 | SCHRAUBE M 8X16 | TORNILLO M 8X16 |
| 29 | F01020451 | VITE 8 X45 5739 8.G ZN | BOLT M 8X45 | VIS M 8X45 | SCHRAUBE M 8X45 | TORNILLO M 8X45 |
| 30 | F01070011 | VIT.A.4,2X1,41X 9,5 6950 4.8NI | BOLT- SELF-TAPPING 4-2X9-5T.E. | VIS AUTOTAR. 4-2X9-5 T. E. COU | SELBSTSCHNEID. SCHRAUBE 4-2X9- | TORNILLO AUTORROSC. 4-2X9-5 |
| 31 | F01240024 | DADO M 8X1,25 U5448 5.8 ZG | NUT 8 UNI 5448 5.8 ZN | ECROU 8 UNI 5448 5.8 ZN | MUTTER 8 UNI 5448 5.8 ZN | TUERCA 8 UNI 5448 5.8 ZN |
| 32 | F01230019 | DADO M 5X 0,8 D982 8 ZG | NORM.SELF-LOCKING NUT 5 GALVAN | ECROU AUTOB.NOR.5 ZN | SELBSTSP. MUTTER NOR.5 ZN | TUERCA AUTOB. NOR. 5 ZN |
| 33 | F01200244 | DADO M 8X1,25 U5588 6.8 ZG | NUT M8 | ECROU M8 | MUTTER M8 | DADO M8 |
| 34 | F01410023 | ROS.M5 5,3X 10X 1 U6592 ZG | WASHER D5 UNI 6592 ZN | RONDELLE D5 UNI 6592 ZN | UNTERLEGSCHEIBE D5 UNI 6592 ZN | ARANDELA D5 UNI 6592 ZN |
| 35 | F01410051 | ROS.M8 8,4X 17X1,6 U6592 ZG | PLANE WASHER D.8 | RONDELLE D.8 | SCHEIBE D.8 | ARANDELA D.8 |
| 36 | F01430059 | ROS.M8 8,4X 15X0,8 U8842J ZG | WASHER D8 DIN 6798 D.INT.ZN | RONDELLE D8 DIN 6798 D. INT. Z | UNT. SCHEIBE D8 DIN 6798 D. IN | ARANDELA D8 DIN 6798 D.INT.ZN |
| 37 | F01460115 | ROS.OND. 8,4X 15X0,5 BR D137A | WASHER D8 DIN 137/A | RONDELLE D8 DIN 137/A | UNTERLEGSCHEIBE D8 DIN 137/A | ARANDELA D8 DIN 137/A |
| 38 | F02200137 | COPIGLIA 2X 15 U1336 ZG | SPLIT PIN 2 X15 1336 GALVAN. | GOUPILLE 2 X15 1336 ZN | SPLINT 2 X15 1336 ZN | PASADOR 2 X15 1336 ZN |
| 39 | F02100079 | SPINA E.P. 5X 16 U6873 C70 BR | PIN EL. .5 X20 DIN 1481 | FICHE EL. 5 X20 DIN 1481 | SPANNSTIFT 5X20 DIN 1481 | CLAVIJA EL.5 X20 DIN 1481 |
| 40 | F02100083 | SPINA E.P. 5X 24 U6873 C70 BR | PIN EL. 5 X24 DIN 1481 | FICHE EL. 5 X24 DIN 1481 | SPANNSTIFT 5 X24 DIN 1481 | CLAVIJA EL.5 X24 DIN 1481 |
| 41 | F02150012 | LINGUETTA 5X 5X 10 U6604A | TAB 05X5X10 UNI6604 | LANGUETTE 05X5X10 UNI6604 | FEDERKEIL 05X5X10 UNI6604 | LENGsETA 05X5X10 UNI6604 |
| 42 | F02200200 | COPIGLIA 4X 70 U1336 ZG | SPLIT PIN 4 X70 1336 GALVAN. | GOUPILLE 4 X70 1336 ZN | SPLINT 4 X70 1336 ZN | PASADOR 4 X70 1336 ZN |
| 43 | G15421870 | PORTA DI SCARICO DISTRIBUTORE | DISTRIBUTOR DISCHARGE DOOR | PORTE DE DECHARGEMENT DISTRIB, | ENTLADUNGSTsR SZAPPARAT | PUERTA DESCARGA DISTRIBUIDOR |
| 44 | G15225140 | CORPO DISTRIBUTORE MT COMPL. | DISTRIBUTOR CASING | CORPS DISTRIBUTEUR | SZAPPARATKTRPER | CUERPO DISTRIBUCIN C |
| 45 | F01020404 | VITE M 6X 1X20 U5739 8.8 ZG | BOLT 6X20 5739 8.G GALVANIZED | VIS 6X20 5739 8.G ZN | SCHRAUBE 6X20 5739 8.G ZN | TORNILLO 6X20 5739 8.G ZN |
| 46 | F01420036 | ROS.M6 6,4X 18X 2 U6593 ZG | FLAT WASHER 6-6X 18X2 6593 ZN | ROND. PLATE 6-6X 18X2 6593 ZN | SCHEIBE 6-6X 18X2 6593 ZN | ARAND. PLANA 6-6X 18X2 6593 ZN |
| 47 | F01020403 | VITE 6 X16 5739 8.G ZN | BOLT M 6X16 | VIS M 6X16 | SCHRAUBE M 6X16 | TORNILLO M 6X16 |
| 48 | F01220011 | DADO M 6X 1 D980 8 ZG | SELF LOCKING NUT M6 | ECROU AUTOBL. M6 | SELBSTSPERR.MUTTER M6 | DADO AUTOBL. M6 |
| 49 | G15220681 | INNESTO RINVIO MT | TRANSMISSION COUPLING MT | ACCOUPLEMENT TRANSMISSION MT | KUPPLUNG VORGELEGE MT | CONEXIN TRANSFERENCIA MT C |
| 50 | F01200220 | DADO M 5X 0,8 U5588 6.8 ZG | NUT 5 UNI 5588 6.8 GALVANIZED | ECROU 5 UNI 5588 6.8 ZN | MUTTER 5 UNI 5588 6.8 ZN | TUERCA 5 UNI 5588 6.8 ZN |
| 51 | F01430035 | ROS.M5 5,3X 10X0,6 U8842J ZG | WASHER D5 DIN 6798 D.INT.ZN | RONDELLE D5 DIN 6798 D. INT. Z | UNT. SCHEIBE D5 DIN 6798 D. IN | ARANDELA D5 DIN 6798 D.INT.ZN |
| 52 | G16620010 | ESPULSORE SEMI BIETOLA | SUGAR BEET EJECTOR | EXPULSEUR BETTES | AUSWERFER RÜBEN | EXPULSOR REMOLACHA |
| 53 | F01020381 | VITE M5X 0,8X 20 U5739 A2 IX | BOLT 5X20 5739 | VIS 5X20 5739 | SCHRAUBE 5X20 5739 | TORNILLO 5X20 5739 |
| 54 | G22270133 | PIASTRINA ANTI TRABOC.SEMI MIN | MINUTE SEED PLATE SP | PLAQUETTE GRAINES PETITES SP | PLZTTCHEN KLEINE SAMEN SP | PLAQUETA SEMILLAS PEQUE¾AS SP |
| 55 | G16620360 | DIMA SELETTORE FISSO | POSITION PLATE FOR FIXED SELEC | GABARIT POSITION SELECTEUR FIX | EINSTELLEHRE F_R FIXEN ABSTREI | PLACA PARA LA POSICIËN SELECTO |
| 56 | G18701890 | RONDELLA D.8,5 SVASATA ZN. | FLARED WASHER D.8.5 ZN. | RONDELLE D.8,5 +VAS+E ZN. | F-CHERSCHEIBE D.8,5 ZN. | ARANDELA Ï 8,5 ABOCINADA ZN. |
| 57 | F01030055 | VITE M 8X1,25X20 U5933 8.8 ZG | BOLT M 8X20 | VIS M 8X20 | SCHRAUBE M 8X20 | TORNILLO M 8X20 |
| 58 | G15226240 | MONT.SERB.SEME 60 LITRI | | | | |
| 59 | G15201081 | COPERCHIO CORPO MT COMPL. | BODY COVER MT | COUVERCLE CORPS MT | DECKEL KTRPER MT | TAPA CUERPO MT |
| 60 | G22270128 | SELETTORE MOBILE ARACHIDI SP | MOBILE SELECTOR- PEANUTS SP | SELECTEUR MOBILE ARACHIDES SP | BEWEGLICHER WZHLER ERDNsSSE SP | SELECTOR MVIL CACAHUETES. S |
| 61 | G15422520 | CORPO DISTRIBUTORE ARACHIDI SP | PEANUT DISTRIBUTION CASING | CORPS DE DISTRIBUTION ARACHIDE | VERTEILUNGSKTRPER ERDNsSSE | CUERPO DE DISTRIBUC.CACAHUETES |
| 62 | G22270132 | FINESTRELLA CONTR.ARACHIDI SP | PEANUT CONTRA. WINDOW SP | FENETRE CONTR. ARACHIDES SP | LUKE ERDNUSSKONTROLLE SP | VENTANILLA CONTR. CACAHUETES. |
| 63 | G22230033 | PORTA CONTROLLO SEME | SEED INSPECTION DOOR | PORTE CONTROLE GRAINES | KONTROLLTsR SAMEN | PUERTA DE CONTROL SEMILLAS |
| 64 | G22270095 | GRIGLIA PROTEZIONE SP | PROTECT. GRID SP | GRILLE PROTECTION SP | SCHUTZGITTER SP | REJILLA PROTECCIN SP G |
| 65 | G22270130 | PIASTRINA ANTI TRABOC.ARACHIDI | PEANUT CLOSING PLATE | PLAQUETTE FERMETURE ARACH. SP | ABSCHLUSSPLZTTCHEN ERDNsSSE SP | PLAQUETA CIERRE CACAHUETES SP |
| 66 | G18904240 | MOLLA APERTURA PORTA CONTROLLO | SPRING | RESSORT | FEDER | MUELLE |

TAV. 111

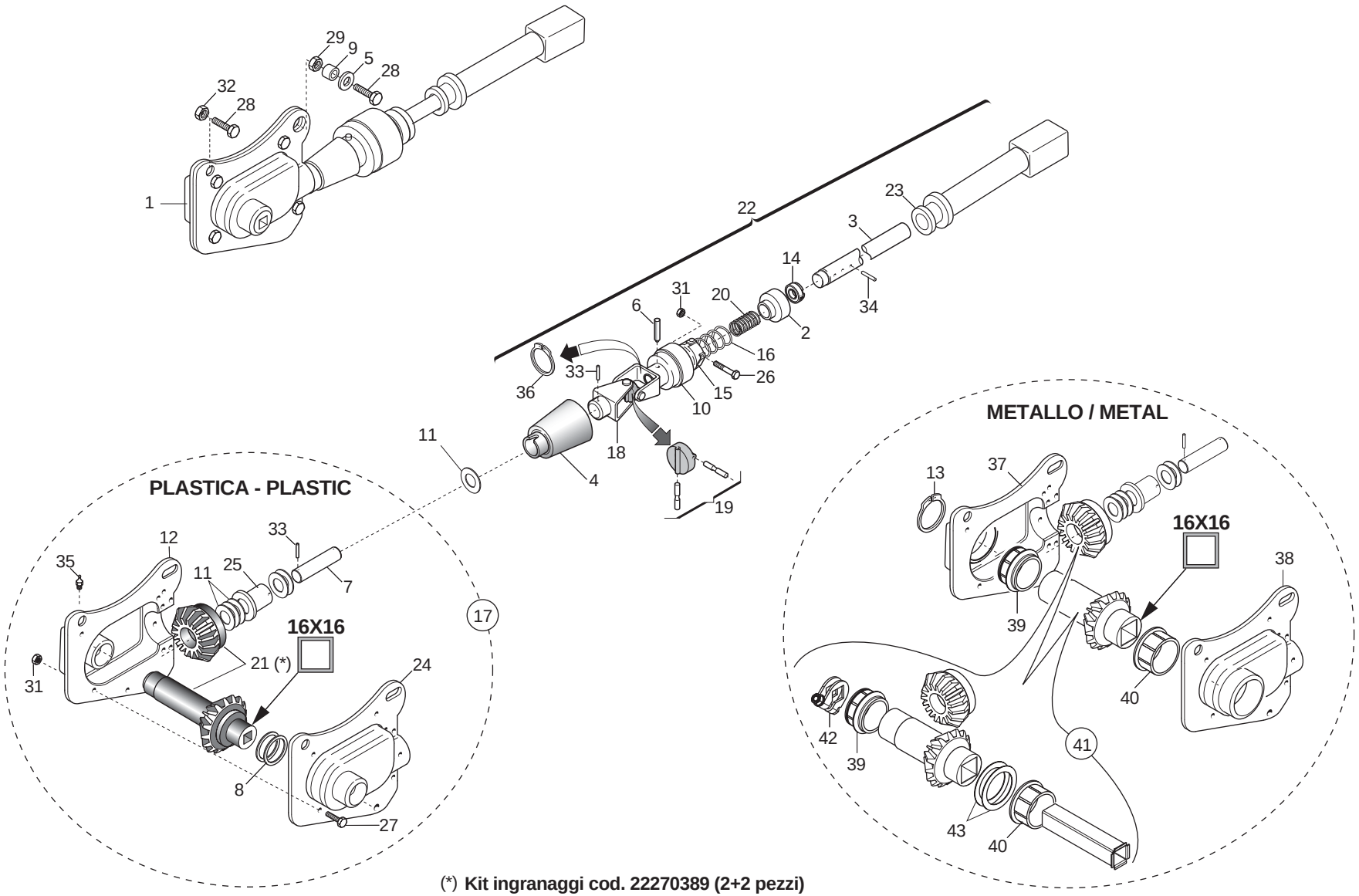


(*) **Kit ingranaggi cod. 22270389 (2+2 pezzi)**



GASPARDO

## *SCATOLA DI RINVIO ELEMENTO SEMINATORE "MT"*

TAV. 111

| Pos. | Cod. | Descrizione | Description | Description | Benennung | Descripcion |
|---|---|---|---|---|---|---|
| 1 | G15226460 | MONT.SCATOLA RINVIO Q.16 EL.MT | | | | |
| 2 | G66248102 | ANELLO SICUREZZA SP | SAFETY RING | BAGUE SECURITE SP | SICHERHEITSRING SP | ANILLO DE SEGURIDAD SP |
| 3 | G15220691 | ASSE AVVISATORE MT | SIGNALLING AXIS MT | AXE AVERTISSEUR MT | ACHSE SIGNALHUPE MT | EJE INDICADOR MT |
| 4 | G19002840 | COPRICARDANO SUPERIORE | TOP CARDAN JOINT COVER | COUVRE-CARDAN SUPERIEUR | OBERE KARDANABDECKUNG | CUBRECARDæN SUPERIOR |
| 5 | G20970032 | RONDELLA 32X4X8,5 | WASHER 32X4X8-5 | RONDELLE 32X4X8-5 | UNTERLEGSCHEIBE 32X4X8-5 | ARANDELA 32X4X8-5 |
| 6 | G66248057 | SPINA DI SICUREZZA SP | SAFETY PIN SP | BROCHE PLASTIC SECURITE CARDAN | SICHERHEITSSTIFT SP | CLAVIJA DE SEGURIDAD SP |
| 7 | G22270452 | ALBERO SCATOLA RINVIO SP/S | INTERMEDIATE BOX SHAFT | ARBRE TRANSMISSION SP/S | WELLE VORGELEGEGEHZUSE SP/S | æRBOL CAJA DE TRANSMISIN SP/SA |
| 8 | G20970051 | RONDELLA 40X0,6X32 | WASHER 40X0-6X32 | RONDELLE 40X0-6X32 | UNTERLEGSCHEIBE 40X0-6X32 | ARANDELA 40X0-6X32 |
| 9 | G20980024 | BOCCOLA 15X8,5X8 | BUSHING 15X8-5X8 | BOITE 15X8-5X8 | BsCHSE 15X8-5X8 | CASQUILLO 15X8-5X8 |
| 10 | G22220071 | AVVISATORE ACUSTICO | HOOTER | SIGNALISATION ACOUSTIQUE | HUPE | INDICADOR ACSTICO A |
| 11 | G22220073 | RONDELLA 28X0,3X16,5 | WASHER 28X0-3X16-5 | RONDELLE 28X0-3X16-5 | UNTERLEGSCHEIBE 28X0-3X16-5 | ARANDELA 28X0-3X16-5 |
| 12 | G22220102 | CONCHIGLIA DX | RIGHT SHELL | COQUILLE DRT. | SCHALE RECHTS | MOLDE DER. |
| 13 | F02050179 | ANELLO E. DE 42X U7435 | | | | |
| 14 | G22220105 | BOCCOLA DI SPINTA | THRUST BUSHING | BOITE DE POUSSEE | SCHUBBsCHSE | CASQUILLO DE APRIETE |
| 15 | G22220155 | ELEM.TENUTA MOLLE COMP. | SPRING SEAL ELEMENT ASSY. | ELEMENT D'ETANCHEITE RESSORTS | DICHTUNGSELEMENT FEDERN KOMP. | ELEM. RESISTENCIA MUELLES COMP |
| 16 | G65338039 | MOLLA COMP.ZN INNESTO SP | ZN COUPLING COMP. SPRING SP | RESSORT COMPL. ZN ACCOUPLEM. | DRUCKFEDER ZN KUPPLUNG SP | MUELLE COMP.ZN ACOPLAMIENTO SP |
| 17 | G16033200 | MONT.SCATOLA RINVIO PE > | TRANSFER CASE | BOITE RENVOI | VORGELEGEGEHZUSE | CAJA DE DISTRIBUCIN |
| 18 | G22270453 | SNODO AVVISATORE SP/S | SIGNALLER ARTICULATION SP/S | ARTICULATION SIGNALISATION SP/ | HUPGELENK SP/S | ARTICULACIN AVISADOR SP/S A |
| 19 | G22270454 | CROCIERA COMPL. SP/S | SPIDER SP/S | CROSILLON COMPL CARDAN TRANSM | GELENKKREUZ KOMPL. SP/S | CRUCETA COMPL. SP/S |
| 20 | G65338018 | MOLLA COMP.ZN SCATOLA RINV.SP | TRANSM. BOX COMP. SPRING . SP | RESSORT COMPL. ZN TRANSMISSION | DRUCKFEDER ZN VORGELEGEGEHZUSE | MUELLE COMP.ZN CAJA TRANSFER.. |
| 21 | G22270389 | 2+2 INGR.SCATOLA DI RINVIO > | 2+2 INTERM. TRANSM. GEAR BOX | COUPLE CON RENV ANGLE (2+2) | 2+2 ZAHNRZDER VORGELEGEGEHZUSE | 2+2 ENGRANAJES CAJA DE LA TRAN |
| 22 | G15225740 | ASSE AVVISATORE MT COMPL. | COMPLETE HORN SHAFT | AXE AVERTISSEUR MT COMPL. | ACHSE SIGNALHUPE MT KOMPL. | EJE AVISADOR MT COMPL. |
| 23 | G15220681 | INNESTO RINVIO MT | TRANSMISSION COUPLING MT | ACCOUPLEMENT TRANSMISSION MT | KUPPLUNG VORGELEGE MT | CONEXIN TRANSFERENCIA MT C |
| 24 | G22220103 | CONCHIGLIA SX | LEFT SHELL | COQUILLE GCH. | SCHALE LINKS | MOLDE IZQ. |
| 25 | G66349001 | BOCCOLA | BUSHING | BOITE | B_CHSE | CASQUILLO |
| 26 | F01020041 | VITE M 6X 1X 45 U5737 8.8 ZN | BOLT 6 X45 5737 8.G GALVANIZED | VIS 6 X45 5737 8.G ZN | SCHRAUBE 6 X45 5737 8.G ZN | TORNILLO 6 X45 5737 8.G ZN |
| 27 | F01020403 | VITE M 6X 1X 16 U5739 8.8 ZN | BOLT M 6X16 | VIS M 6X16 | SCHRAUBE M 6X16 | TORNILLO M 6X16 |
| 28 | F01020440 | VITE M 8X1,25X25 U5739 8.8 ZN | BOLT M8 X25 5739 8.8 ZN | VIS M8 X25 5739 8.8 ZN | SCHRAUBE M8 X25 5739 8.8 ZN | TORNILLO M8 X25 5739 8.8 ZN |
| 29 | F01200244 | DADO M 8X1,25 U5588 6.8 ZN | NUT M8 | ECROU M8 | MUTTER M8 | DADO M8 |
| 30 | F01260021 | DADO CIECO M8 U5721 5.8 ZN | CAP NUT M8 5.8 ZN UNI 5721 | ECROU BORGNE M8 5.8 ZN UNI 57 | BLINDE MUTTER M8 5.8 ZN UNI 57 | TUERCA CIEGA M8 5.8 ZN UNI 572 |
| 31 | F01220011 | DADO M 6X 1 D980 8 ZN | SELF LOCKING NUT M6 | ECROU AUTOBL. M6 | SELBSTSPERR.MUTTER M6 | DADO AUTOBL. M6 |
| 32 | F01220022 | DADO M 8X1,25 D980 8 ZN | SELF LOCKING NUT M8X1,25 980V | ECROU AUTOBL. M8X1,25 980-V | SELBSTSP.MUTT. M8X1,25 980-V | DADO AUTOBL. M8X1,25 980-V |
| 33 | F02100114 | SPINA E.P. 6X 30 U6873 C70 BR | ELASTIC PIN 6X30 | GOUJON ELASTIQUE 6X30 | SPANNHUELSE 6X30 | ESPINA ELASTICA 6X30 |
| 34 | F02100121 | SPINA E.P. 6X 40 U6873 C70 BR | ELASTIC PIN 6X40 | GOUJON ELASTIQUE 6X40 | SPANNHUELSE 6X40 | PASADOR 6X40 |
| 35 | F01100011 | ING.M 6X1 7663-A 9SMNPB28 ZN | SPHERE NIPPLE M6X1/A | GRAISSEUR A BILLES M6X1/A | KUGELFETTBsCHSE M6X1/A | ENGRAS. DE ESFERAS M6X1/A |
| 36 | F02050045 | ANELLO E. DE 16X 1 U7435 C70 | SEEGER RING 16X 1 U7435 C70 | BAGUE SEEGER 16 X 1 U7435 C70 | SEEGERING 16 X 1 U7435 C70 | ANILLO 16X 1 U7435 C70 |
| 37 | G16620880 | ASS.CONCHIGLIA DX | | | | |
| 38 | G22505069 | CONCHIGLIA SX | LEFT SHELL | COQUILLE GCH. | SCHALE LINKS | MOLDE IZQ. |
| 39 | G19005681 | BOCCOLA EST.SCATOLA RINVIO | | | | |
| 40 | G19005671 | BOCCOLA INT.SCATOLA RINVIO | | | | |
| 41 | G16621080 | KIT INGR.RINVIO ZAMA | | | | |
| 42 | G22505085 | FERMO ASSE IN LAMIERA | PLATE AXLE STOP | ARRET AXE EN TOLE | FESTSTELLVORRICHTUNG BLECHACHS | BLOQUEO EJE DE CHAPA |
| 43 | G20970141 | RONDELLA 50X37X0,6 | WASHER 50X37X0-6 | RONDELLE 50X37X0-6 | UNTERLEGSCHEIBE 50X37X0-6 | ARANDELA 50X37X0-6 |

# TAV. 131

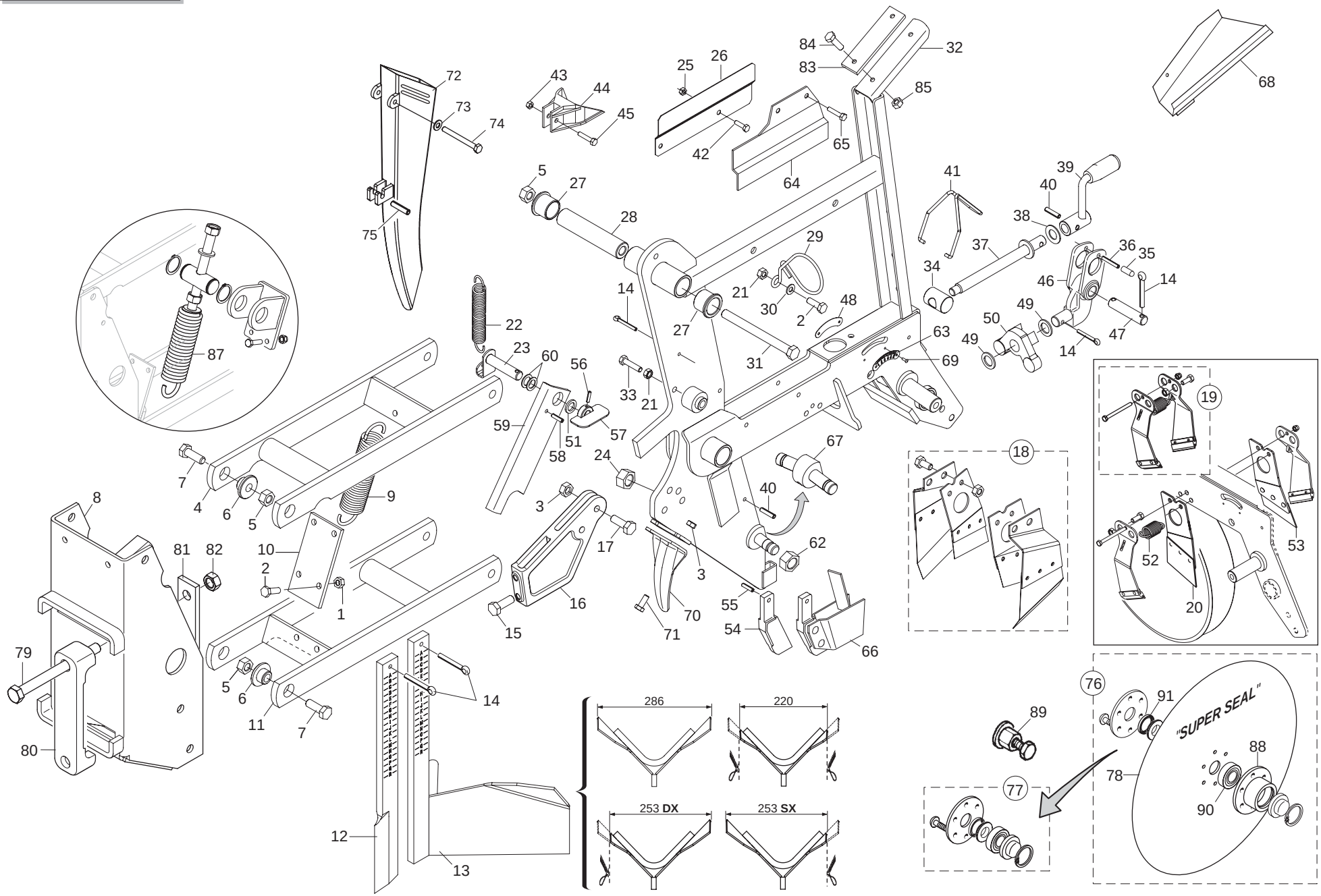




GASPARDO

cod. G19530911

## *TELAIO ELEMENTO "MT"*

TAV. 131

| Pos. | Cod. | Descrizione | Description | Description | Benennung | Descripcion |
|---|---|---|---|---|---|---|
| 1 | F01200244 | DADO M 8X1,25 U5588 6.8 ZN | NUT M8 | ECROU M8 | MUTTER M8 | DADO M8 |
| 2 | F01020440 | VITE M 8X1,25X25 U5739 8.8 ZN | BOLT M8 X25 5739 8.8 ZN | VIS M8 X25 5739 8.8 ZN | SCHRAUBE M8 X25 5739 8.8 ZN | TORNILLO M8 X25 5739 8.8 ZN |
| 3 | F01220033 | DADO M10X 1,5 D980 8 ZN | NUT M10X 1,5 D980 8 ZB | ECRO.M10X 1,5 D980 8 ZB | MUTT.M10X 1,5 D980 8 ZB | TUER.M10X 1,5 D980 8 ZB |
| 4 | G15223060 | ASS.PARALLELO SUPERIORE | UPPER PARALLEL | PARALL. SUP. | PARALLELOGRAMM OBEN | PARALELO SUPERIOR |
| 5 | F01220048 | DADO M12X1,75 D980 8 ZN | SELF LOCKING NUT M12X1,75 980V | ECROU AUTOBL. M12X1,75 980-V | SIEHE 00553312 | DADO AUTOBL. M12X1,75 980-V |
| 6 | G15224630 | BOCCOLA BRACCIO | ARM BUSHING | BOITE BRAS | BsCHSE ARM | CASQUILLO BRAZO |
| 7 | F01020512 | VITE M12X1,75X35 U5739 8.8 ZN | SCREW M 12X35 | VIS M 12X35 | SCHRAUBE M 12X35 | TORNILLO M 12X35 |
| 8 | G15225150 | PIASTRA ATTACCO SEMINATORE | COUPLING PLATE | PLAQUE DE RACCORD | KUPPLUNGSPLATTE | PLACA DE CONEXIN |
| 9 | G65337040 | MOLLA TRAZ.ELEMENTO MT600 | TRACTION SPRING MT600 | RESSORT TRACT. ELEMENT MT600 | ZUGFEDER ELEMENT MT600 | MUELLE TRACC. ELEMENTO MT600 |
| 10 | G15224410 | ATTACCO MOLLA | SPRING CONNECTION | FIXATION RESSORT | FEDERANSCHLUSS | ENGANCHE MUELLE |
| 11 | G15223071 | PARALLELO INFERIORE | LOWER PARALLEL | PARALL. INF. | PARALLELOGRAMM UNTEN | PARALELO INFERIOR |
| 12 | G15420842 | TAGLIENTE | EDGE | COUTRE CHASSE-MOTTE | SCHNEIDE | FILO DE CORTE |
| 13 | G15224900 | SPIANATERRA | SOIL LEVELLER | NIVELEUSE | ERDEBNER | NIVELADORA |
| 14 | F02200226 | COPIGLIA 5X 25 U1336 ZN | SPLIT PIN 5 X25 1336 GALVAN. | GOUPILLE 5 X25 1336 ZN | SPLINT 5 X25 1336 ZN | PASADOR 5 X25 1336 ZN |
| 15 | F01020508 | VITE M12X1,75X25 U5739 8.8 ZN | BOLT M 12X25 | VIS M 12 X 25 | SCHRAUBE M 12 X 25 | TORNILLO M 12 X 25 |
| 16 | G19204000 | SUPP.SPIANATERRA CORTO | | | | |
| 17 | F01020481 | VITE M10X 1,5X40 U5739 8.8 ZN | BOLT 10X40 5739 8.G GALVANIZED | VIS 10X40 5739 8.G ZN | SCHRAUBE 10X40 5739 8.G ZN | TORNILLO 10X40 5739 8.G ZN |
| 18 | G15226580 | KIT RASCHIATERRA | | | | |
| 19 | G15226590 | KIT RASCHIATERRA VIDIA | | | | |
| 20 | G15226360 | RASCHIATERRA INT.SX | | | | |
| 21 | F01200244 | DADO M 8X1,25 U5588 6.8 ZN | NUT M8 | ECROU M8 | MUTTER M8 | DADO M8 |
| 22 | G65337007 | MOLLA TRAZ.ATT.3 PUNTI 12 F SP | TRACTION COUPLING SPRING 3 POI | RESSORT TRACT. ATTELAGE 3 POIN | ZUGFEDER 3 PUNKTE KUPPLUNG 12 | MUELLE TRAC. CONEX. 3 PUNTOS 1 |
| 23 | G22505109 | FERMO MOLLA AGGANCIO | SPRING STOP LINKAGE | ARRET RESSORT ATTELAGE | FESTSTELLVORR. FEDER VERBINDUN | BLOQUEO MUELLE ENGANCHE |
| 24 | G15220540 | DADO M16X1,5 SX | NUT M16X1-5 LEFT | ECROU M16X1-5 GCH | MUTTER M16X1-5 LI | TUERCA M16X1-5 IZQ |
| 25 | F01200232 | DADO M 6X 1 U5588 6.8 ZN | | | | |
| 26 | G15223561 | PROTEZIONE DX | RIGHT GUARD | PROTECTION DRT | SCHUTZ RE | PROTECCIN DER P |
| 27 | G66349003 | BOCCOLA SINT. | BUSHING- SINTERED | BOITE FRITTEE | SYNTH. BUECHSE | CASQUILLO SINT. |
| 28 | G22505108 | MOZZO BRACCI PARALLELOGRAMMA | PARALLELOGRAM ARM HUB | MOYEU BRAS PARALLELOGRAMME | NABE PARALLELOGRAMM ARME | CUBO BRAZOS PARALELOGRAMA |
| 29 | G18903140 | MOLLA GUIDATUBO | PIPE GUIDE SUPPORT | RESSORT GUIDE-TUBE | FEDER ROHRFsHRUNG | MUELLE GUA TUBOS A |
| 30 | F01410051 | ROS.M8 8,4X 17X1,6 U6592 ZN | PLANE WASHER D.8 | RONDELLE D.8 | SCHEIBE D.8 | ARANDELA D.8 |
| 31 | F01020179 | VITE M12X1,75X150 5737 8.8 ZN | BOLT 12X150 5737 8.G GALVANIZ. | VIS 12X150 5737 8.G ZN | SCHRAUBE 12X150 5737 8.G ZN | TORNILLO 12X150 5737 8.G ZN |
| 32 | G15225851 | CORPO CENTRALE MT | CENTRAL CASING | CORPS CENTR. MT | MITTELKTRPER MT | CUERPO CENTRAL MT |
| 33 | F01020449 | VITE M 8X1,25X35 U5739 8.8 ZN | BOLT M 8X35 | VIS M 8X35 | SCHRAUBE M 8X35 | TORNILLO M 8X35 |
| 34 | G22230063 | ELEMENTO ARTICOLATO | ARTICULATED ELEMENT | ELEMENT ARTICULE | GELENKELEMENT | ELEMENTO ARTICULADO |
| 35 | F05100193 | CAPPUCCIO 5,95X19,05 GIALLO | CAP | BOUCHON | DECKEL | CORCHO |
| 36 | F02100126 | SPINA E.P. 6X 60 U6873 C70 BR | PIN EL. 6 X60 DIN 1481 | FICHE EL. 6 X60 DIN 1481 | SPANNSTIFT 6 X60 DIN 1481 | CLAVIJA EL.6 X60 DIN 1481 |
| 37 | G22505058 | VITE DI REGOLAZIONE POSTERIORE | REAR ADJUSTMENT BOLT | VIS DE REGLAGE ARRIERE | HINTERE EINSTELLSCHRAUBE | TORNILLO DE REGULACIN TRASEROS |
| 38 | G20970149 | RONDELLA D.15X28X1,5 | WASHER D.15X28X1-5 | RONDELLE D. 15X28X1-5 | UNTERLEGSCHEIBE D.15X28X1-5 | ARANDELA D.15X28X1-5 |
| 39 | G22270235 | MANIGLIA REGOLAZIONE B4 | ADJUSTMENT HANDLE B4 | POIGNEE REGLAGE B4 | EINSTELLGRIFF B4 | MANIJA REGULACIN B4 M |
| 40 | F02100109 | SPINA E.P. 6X 24 U6873 C70 BR | PIN EL. .6 X24 DIN 1481 | FICHE EL. 6 X24 DIN 1481 | SPANNSTIFT 6 X24 DIN 1481 | CLAVIJA EL.6 X24 DIN 1481 |
| 41 | G18903741 | MOLLA FERMO MANIGL.MAGICA>2004 | HANDLE STOP SPRING MAGICA 2004 | RESSORT ARRET POIG.MAGICA 2004 | FEDER GRIFFSPERRE MAGICA 2004 | MUELLE BLOQUEO MAN. MAGICA 04 |
| 42 | F01020403 | VITE M 6X 1X 16 U5739 8.8 ZN | BOLT M 6X16 | VIS M 6X16 | SCHRAUBE M 6X16 | TORNILLO M 6X16 |
| 43 | F01230022 | DADO M 6X 1 D982 8 ZN | NORM.SELF-LOCKING NUT 6 GALVAN | ECROU AUTOB.NOR.6 ZN | SELBSTSP. MUTTER NOR.6 ZN | TUERCA AUTOB. NOR. 6 ZN |
| 44 | G19002700 | PROTEZIONE FOTOCELLULA > | PHOTOCELL PROTECTION | PROTECT CAPT PHOTOC SP3-MT-MG> | SCHUTZ PHOTOZELLE | PROTECCIN FOTOCLULA PR |
| 45 | F01020408 | VITE M 6X 1X 30 U5739 8.8 ZN | BOLT M 6X1X30 | VIS M 6X1X30 | SCHRAUBE M 6X1X30 | TORNILLO M 6X1X30 |
| 46 | G15224691 | SUPP.BILANC.REG.RUOTE PROFOND. | | | | |
| 47 | G22505056 | PERNO | PIN | PIVOT | ZAPFEN | PERNO |
| 48 | G19705290 | TARGHETTA REG.DX RUOTE PROFOND | PLATE | PLAQUET | PLATTE | PLACA |
| 49 | G18701820 | RONDELLA 16,5X25X1,0 ZN | WASHER 16.5 X 25 X 1- GALVAN. | RONDELLE 16,5 X25 X1 ZN | UNTERLEGSCHEIBE 16,5 X25 X1 ZN | ARANDELA 16,5 X25 X1 ZN |
| 50 | G19203130 | BILANCIERE PRFONDITA' | DEPTH EQUALISER | BALANCIER PROFONDEUR | KIPPHEBEL TIEFE | BALANCÍN PROFUNDIDAD |
| 51 | G20970035 | RONDELLA 32X4X13 | WASHER 32X4X13 | RONDELLE 32X4X13 | UNTERLEGSCHEIBE 32X4X13 | ARANDELA 32X4X13 |
| 52 | G18701880 | RONDELLA DI SPINTA | WASHER | RONDELLE | UNTERLEGSCHEIBE | ARANDELA |
| 53 | G15226340 | RASCHIATERRA INT.DX | | | | |
| 54 | G19203121 | TAGLIENTE INTERNO DISCHI MT | INNER DISC CUTTING EDGE MT | TRANCHANT INT+RIEUR DISQUES MT | INNERE SCHNEIDE SCHEIBEN MT | FILO INTERNO DISCOS MT |
| 55 | F02100094 | SPINA E.P. 5X 60 U6873 C70 BR | PIN EL. .5 X60 DIN 1481 * | FICHE EL. 5 X60 DIN 1481 * | SPANNSTIFT 5 X60 DIN 1481 * | CLAVIJA EL.5 X60 DIN 1481 * |

# TAV. 131

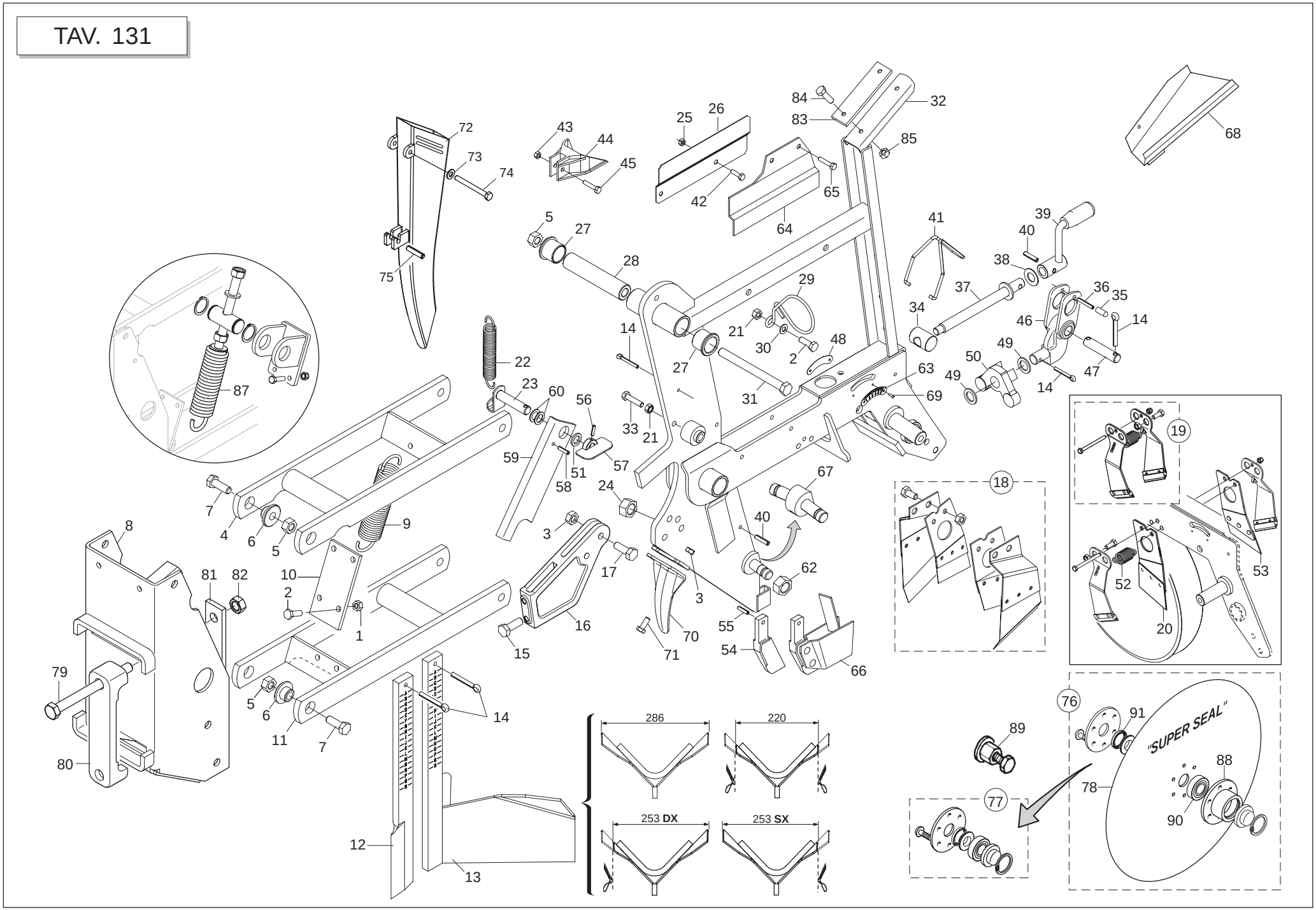




GASPARDO

## *TELAIO ELEMENTO "MT"*

TAV. 131

| Pos. | Cod. | Descrizione | Description | Description | Benennung | Descripcion |
|---|---|---|---|---|---|---|
| 56 | F02100062 | SPINA E.P. 4X 24 U6873 C70 BR | PIN EL. 4 X24 DIN 1481 | FICHE EL. 4 X24 DIN 1481 | SPANNSTIFT 4 X24 DIN 1481 | CLAVIJA EL.4 X24 DIN 1481 |
| 57 | G22505048 | FERMO LEVA | LEVER STOP | ARRET LEVIER | FESTSTELLVORRICHTUNG HEBEL | BLOQUEO PALANCA |
| 58 | F02100083 | SPINA E.P. 5X 24 U6873 C70 BR | PIN EL. 5 X24 DIN 1481 | FICHE EL. 5 X24 DIN 1481 | SPANNSTIFT 5 X24 DIN 1481 | CLAVIJA EL.5 X24 DIN 1481 |
| 59 | G22505110 | LEVA AGGANCIO ELEMENTO | ELEMENT COUPLING LEVER | LEVIER ATTELAGE ELEMENT | KUPPLUNGSHEBEL ELEMENT | PALANCA ENGANCHE ELEMENTO |
| 60 | G20970100 | RONDELLA 30X0,5X22 ACC. | WASHER 30X0-5X22 ACC. | RONDELLE 30X0-5X22 ACIER | UNTERLEGSCHEIBE 30X0-5X22 ACC. | ARANDELA 30X0-5X22 ACC. |
| 61 | G19700810 | DECAL.REGOLAZIONE PROFONDITA' | DEPTH ADJUSTMENT STICKER | DECALC. REGLAGE PROFONDEUR | ABZIEHB. EINST. TIEFE | CAL.REGULACIN PROFUNDIDAD |
| 62 | F01200442 | DADO M16X 1,5 U5589 6.8 ZN | NUT 16X1-5 UNI 5589 6.8 GALVAN | ECROU 16X1-5 UNI 5589 6.8 ZN | MUTTER 16X1-5 UNI 5589 6.8 ZN | TUERCA 16X1-5 UNI 5589 6.8 ZN |
| 63 | G19705280 | TARGHETTA REG.SX RUOTE PROFOND | PLATE | PLAQUET | PLATTE | PLACA |
| 64 | G15223571 | PROTEZIONE SX | LEFT GUARD | PROTECTION GCH | SCHUTZ LI | PROTECCIN IZQ P |
| 65 | F01070047 | VIT.A.3,5X1,34X 9,5 6954 4.8NI | BOLT 3-5X 9-5 DIN 7981 | VIS 3-5X 9-5 DIN 7981 | SCHRAUBE 3-5X 9-5 DIN 7981 | TORNILLO 3-5X 9-5 DIN 7981 |
| 66 | G15225970 | FALCIONE CORTO INT.DISCHI COMP | COMPL. DISKS INNER COULTER | HACHOIR INTERNE DISQUES COMPL. | S-SCHARSCHEIBEN INNEN KOMPL. | ARADO INTERNO DISCOS COMPL. |
| 67 | G15223140 | ASSE DISCHI | DISC SPINDLE | AXES DISQUES | SCHEIBENACHSE | EJE DISCOS |
| 68 | G15224500 | SCIVOLO SCARICO SEMI | SEED DISCHARGE CHUTE | LANCOIR DECHARGE GRAINES | RUTSCHE SAMENENTLADUNG | PLANO INCLINADO DESCARGA SEMIL |
| 69 | F02250066 | RIVETTO STR. 3X 9 U9200A AL | POP RIVET 3X9 ALUMINIUM | RIVET 3 X 9 ALL | REISSNIETE 3 X 9 ALU | REMACHE DESGAR. 3 X 9 AL |
| 70 | G15225860 | PROTEZIONE DISCHI | DISC PROTECTION | PROTECTION DISQUE | DISCSCHUTZ | PROTECCIN DISCO |
| 71 | F01020470 | VITE M10X 1,5X20 U5739 8.8 ZN | BOLT M 10X20 | VIS M 10X20 | SCHRAUBE M 10X20 | TORNILLO M 10X20 |
| 72 | G19002910 | CONVOGLIATORE SEME PLASTICA | PLASTIC SEED CONVEYOR | CONVOYEUR GRAINE PLASTIQUE | SAMENFTRDERER PLASTIK | TRANSPORTADOR SEMILLAS DE PLAS |
| 73 | F01410037 | ROS.M6 6,4X12,5X1,6 U6592 ZN | PLANE WASHER D.6 | RONDELLE D.6 | SCHEIBE D.6 | ARANDELA D.6 |
| 74 | F01020043 | VITE M 6X 1X 60 U5737 8.8 ZN | BOLT 6 X60 5737 8.G GALVANIZED | VIS 6 X60 5737 8.G ZN | SCHRAUBE 6 X60 5737 8.G ZN | TORNILLO 6 X60 5737 8.G ZN |
| 75 | F02100110 | SPINA E.P. 6X 26 U6873 C70 BR | PIN EL. 6 X26 DIN 1481 | FICHE EL.6 X26 DIN 1481 | SPANNSTIFT 6 X26 DIN 1481 | CLAVIJA EL.6 X26 DIN 1481 |
| 76 | G15225500 | DISCO ASSOLC.PROTETTO COMPL. | COMPL. PROTECTED DISC COULTER | DISQUE DU SOC PROT+G+ COMPLET | GESCH_TZTE FURCHENFORMSCHEIBE | DISCO SURC.PROTEGIDO COMPL. |
| 77 | G15226600 | KIT X DISCO SUPER SEAL | | | | |
| 78 | G13825091 | DISCO ASSOLCATORE D.373 | FURROW OPENER DISK D.373 | DISQUE D. 373 6 T.D.6 | SCHEIBE SZSCHARENREISSER D.373 | DISCO SURCADOR D.373 |
| 79 | F01020225 | VITE M14X 2X160 U5737 8.8 BR | BOLT M 14 X160 5737 8.G | VIS M 14 X160 5737 8.G | SCHRAUBE M 14 X160 5737 8.G | TORNILLO M 14 X160 5737 8.G |
| 80 | G19204030 | SCONTRO FISS.150 2F D15 | | | | |
| 81 | G22505037 | SCONTRO PIASTRA ATTACCO MT | STRIKER PLATE ATT. MT | BUTEE PLAQUE FIXATION MT | KUPPLUNGSPLATTEN-ANSCHLAG MT | ELEMENTO DE EMPALME PLACA CONE |
| 82 | F01200306 | DADO M14X 2 U5588 6.8 ZN | NUT M14X2 | ECROU M14X2 | MUTTER M14X2 | DADO M14X2 |
| 83 | G22505102 | SCONTRO RINFORZO SERBATOIO | STRIKER PLATE TANK REINFORCEME | BUTEE RENFORCEMENT RESERVOIR | BEHZLTER VERSTZRKUNSANSCHLAG | ELEM.EMPALME REFUERZO DEPSITOC |
| 84 | F01020404 | VITE M 6X 1X20 U5739 8.8 ZN | BOLT 6X20 5739 8.G GALVANIZED | VIS 6X20 5739 8.G ZN | SCHRAUBE 6X20 5739 8.G ZN | TORNILLO 6X20 5739 8.G ZN |
| 85 | F01220011 | DADO M 6X 1 D980 8 ZN | SELF LOCKING NUT M6 | ECROU AUTOBL. M6 | SELBSTSPERR.MUTTER M6 | DADO AUTOBL. M6 |
| 86 | G15225980 | FALCIONE CORTO INT.DISCHI | DISKS INNER COULTER | HACHOIR INTERNE DISQUES | S-SCHARSCHEIBEN INNEN | ARADO INTERNO DISCOS |
| 87 | G15226270 | MOLLA COMPL. | | | | |
| 88 | G15223651 | SUPPORTO CUSCINETTO DISCO | DISK BEARING SUPPORT | SUPPORT PALIER DISQUE | SCHEIBENLAGERBsCHSE | SOPORTE COJINETE DISCO |
| 89 | G15225240 | ESTRATTORE DISCHI ELEMENTO MT | SEED PLATE EXTRACTOR ELEM. MT | EXTRACTEUR DISQUE ELEMENT MT | SCHEIBENAUSZIEHER ELEMENT MT | EXTRACTOR DISCOS ELEMENTO MT |
| 90 | F04010084 | CUSC.D17D47 B22,2 3303 LLU/DDU | BEARING 3303 2RS | PALIER 3303 2RS | LAGER 3303 2RS | COJINETE 3303 2RS |
| 91 | F03011075 | AN. TENUTA B1OF 24X32X4 | SEALING RING G24X32X4 | BAGUE D'ETANCHEITE G24X32X4 | DICHTRING G24X32X4 | ANILLO AISLADOR G24X32X4 |

# TAV. 141

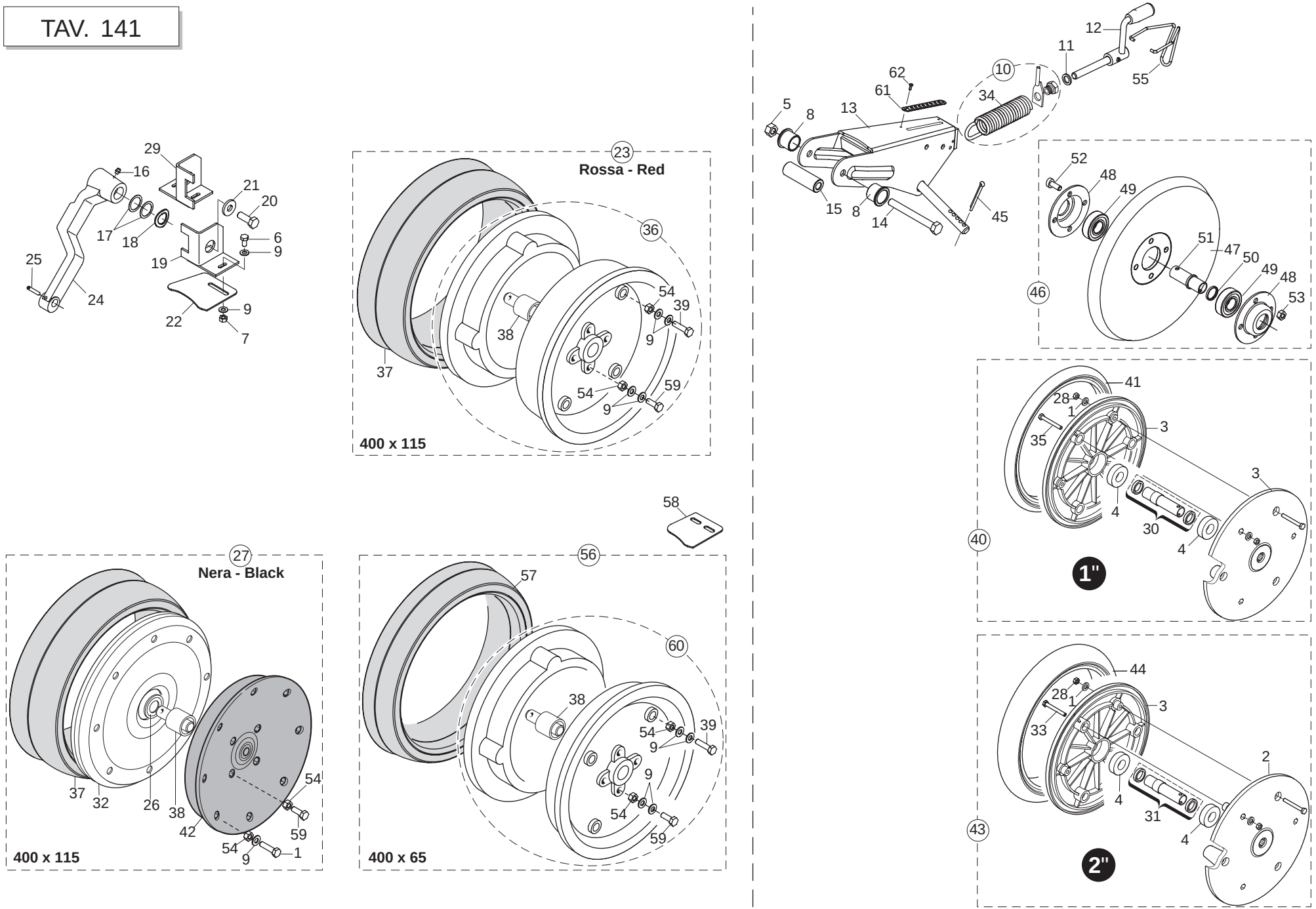




GASPARDO

## *RUOTE DI DI PROFONDITA' E DI COMPRESSIONE "MT"*

TAV. 141

| Pos. | Cod. | Descrizione | Description | Description | Benennung | Descripcion |
|---|---|---|---|---|---|---|
| 1 | F01020070 | VITI M 8X1,25X45 U5737 8.8 ZN | BOLT 8 X45 5737 8.G GALVANIZED | VIS 8 X45 5737 8.G ZN | SCHRAUBE 8 X45 5737 8.G ZN | TORNILLO 8 X45 5737 8.G ZN |
| 2 | F06120147 | SEMICERCHIO PLA RUOTA 2" | PLASTIC HALF RIM 2' WHEEL | DEMI-JANTE PLAST. ROUE 2" | HALBFELGE PLA RAD 2" | SEMIARO PL-ST.RUEDA 2" |
| 3 | F06120146 | SEMICERCHIO PLA RUOTA 1" | PLASTIC HALF RIM 1' WHEEL | DEMI-JANTE PLAST. ROUE 1" | HALBFELGE PLA RAD 1" | SEMIARO PL-ST.RUEDA 1" |
| 4 | F04010131 | CUSC.D20 D42 B12 6004-2RSH EX> | BEARING 6004 2RS EX. SKF | ROULEMENT 6004 | LAGER 6004 | COJINETE 6004 |
| 5 | F01220048 | DADO M12X1,75 D980 8 ZN | SELF LOCKING NUT M12X1,75 980V | ECROU AUTOBL. M12X1,75 980-V | SIEHE 00553312 | DADO AUTOBL. M12X1,75 980-V |
| 6 | F01020436 | VITE M 8X1,25X 20 U5739 8.8 ZN | BOLT M 8X20 | VIS M 8X20 | SCHRAUBE M 8X20 | TORNILLO M 8X20 |
| 7 | F01200244 | DADO M 8X1,25 U5588 6.8 ZN | NUT M8 | ECROU M8 | MUTTER M8 | DADO M8 |
| 8 | G66349003 | BOCCOLA SINT. | BUSHING- SINTERED | BOITE FRITTEE | SYNTH. BUECHSE | CASQUILLO SINT. |
| 9 | F01410051 | ROS.M8 8,4X 17X1,6 U6592 ZN | PLANE WASHER D.8 | RONDELLE D.8 | SCHEIBE D.8 | ARANDELA D.8 |
| 10 | G15226280 | INDICATORE PROFONDITA' COMPL | | | | |
| 11 | F01410076 | ROS.M12 13X 24X2,5 U6592 ZN | PLANE WASHER D12 UNI 6592 ZN | RONDELLE D12 UNI 6592 ZN | SCHEIBE D12 UNI 6592 ZN | ARANDELA D12 UNI 6592 ZN |
| 12 | G15220960 | MANIGLIA REGOLAZIONE | ADJUSTMENT HANDLE | POIGNEE REGLAGE | EINSTELLGRIFF | MANIJA REGULACI0N |
| 13 | G15224611 | ASS.SUPP.RUOTE COMPRESSIONE | | | | |
| 14 | F01020170 | VITE M12X1,75X100 5737 8.8 ZN | BOLT M 12X100 | VIS M 12X100 | SCHRAUBE M 12X100 | TORNILLO M 12X100 |
| 15 | G22505059 | MOZZO POSTERIORE | REAR HUB | MOYEU ARRIERE | HINTERNABE | CUBO TRASERO |
| 16 | F01100011 | ING.M 6X1 7663-A 9SMNPB28 ZN | SPHERE NIPPLE M6X1/A | GRAISSEUR A BILLES M6X1/A | KUGELFETTBsCHSE M6X1/A | ENGRAS. DE ESFERAS M6X1/A |
| 17 | F01440079 | ROND.RASAM.26,2X34,8X0,5 IX | WASHER D.26,2X34,8X0,5 | RONDELLE D.26,2X34,8X0,5 | UNTERLEGSCHEIBE D.26,2X35X0,5 | ARANDELA D.26,2X34,8X0,5 |
| 18 | G18701880 | RONDELLA DI SPINTA | WASHER | RONDELLE | UNTERLEGSCHEIBE | ARANDELA |
| 19 | G15223831 | ATT.RASCHIATERRA SX | LEFT SOIL SCRAPER ATTACHMENT. | CONNEXION RACLEUR GCH | ERDSCHABERANSCHLUSS LI | CONEX. RASCADOR DE TIERRA IZQ |
| 20 | F01020510 | VITE M12X1,75X30 U5739 8.8 ZN | BOLT M 12X30 | VIS M 12X30 | SCHRAUBE M 12X30 | TORNILLO M 12X30 |
| 21 | G20970035 | RONDELLA 32X4X13 | WASHER 32X4X13 | RONDELLE 32X4X13 | UNTERLEGSCHEIBE 32X4X13 | ARANDELA 32X4X13 |
| 22 | G15223862 | RASCHIATERRA RUOTE COMPRESS. | SOIL SCRAPER PRESS WHEEL | D+CROTTOIR ROUES DE COMPRESSIO | ABSTREIFER DRUCKROLLE | RASCADOR TIERRA RUEDAS COMPRES |
| 23 | G15223870 | RUOTA PROFONDITA' MT | DEPTH WHEEL MT | ROUE PROFONDEUR MT | TIEFENRAD MT | RUEDA PROF.MT |
| 24 | G22505132 | BRACCIO RUOTA PROFONDITA' | DEPTH WHEEL ARM- | BRAS ROUE PROFONDEUR | TIEFENRADARM | BRAZO RUEDA DE PROFUNDIDAD |
| 25 | F02100118 | SPINA E.P. 6X 36 U6873 C70 BR | PIN EL. 6 X36 DIN 1481 | FICHE EL. 6 X36 DIN 1481 | SPANNSTIFT 6 X36 DIN 1481 | CLAVIJA EL.6 X36 DIN 1481 |
| 26 | F01440083 | ROS. 17X40X0,5 D988 ST2K60 BR | WASHER 17X40X0,5 D988 ST2K60 | RONDELLE 17X40X0,5 D988 ST2K60 | SCHEIBE 17X40X0,5 D988 ST2K60 | ARANDELA 17X40X0,5 D988 ST2K60 |
| 27 | F06120090 | RUOTA PROFONDITA' TAMBURATA MT | | | | |
| 28 | F01230022 | DADO M 6X 1 D982 8 ZN | NORM.SELF-LOCKING NUT 6 GALVAN | ECROU AUTOB.NOR.6 ZN | SELBSTSP. MUTTER NOR.6 ZN | TUERCA AUTOB. NOR. 6 ZN |
| 29 | G15223851 | ATTACCO RASCHIATERRA DX | RIGHT SOIL SCRAPER ATTACHMENT | CONNEXION RACLEUR DRT | ERDSCHABERANSCHLUSS RE | CONEX. RASCADOR DE TIERRA DER |
| 30 | G15226610 | KIT DIST./GUARNIZIONI RUOTA V1 | | | | |
| 31 | G15226620 | KIT DIST./GUARNIZIONI RUOTA V2 | | | | |
| 32 | G56345120 | SEMICERCHIO FE NERO 400X115 | HALF RIM 400X115 | DEMI-JANTE 400X115 | HALBFELGE 400X115 | SEMIARO 400X115 |
| 33 | F01020042 | VITE M 6X 1X 50 U5737 8.8 ZN | BOL.M 6X 1X 50 U5737 8.8 ZG | VIS 6 X50 5737 8.G ZN | SCHRAUBE 6 X50 5737 8.G ZN | TORNILLO 6x50 5737 8.G ZN |
| 34 | G15226270 | MOLLA COMPL. | | | | |
| 35 | F01020406 | VITE M 6X 1X 25 U5739 8.8 ZN | BOLT M 6X25 | VIS M 6X25 | SCHRAUBE M 6X25 | TORNILLO M 6X25 |
| 36 | F06120203 | CERCHIO CON CUSC.X COP.400X115 | RING W/BEARING FOR COVER400X11 | JANTE CON CUSC.X COP.400X115 | REIFEN MIT LAGER F.MANT. 400X1 | LLANTA CON COJ. X COB. 400X115 |
| 37 | F06120188 | COPERTURA RUOTA PROFONDITA' MT | DEPTH WHEEL COVERING MT | COUVERTURE ROUE PROFONDEUR MT | MANTEL TIEFENRAD' MT | CUBIERTA RUEDA PROFUNDIDAD MT |
| 38 | F04100040 | CUSC. POMPAACQUA K094 | BEARING RING 400X115 | PALIER ROUE JAUG JANTE 400X115 | LAGER REIFEN 400X115 | COJINETE LLANTA 400X115 |
| 39 | F01020436 | VITE M 8X1,25X 20 U5739 8.8 ZN | BOLT M 8X20 | VIS M 8X20 | SCHRAUBE M 8X20 | TORNILLO M 8X20 |
| 40 | F06120076 | RUOTA DA 1 POLLICE MT | RUBBER WHEEL 1'X12' PLA.2 BEAR | ROUE CAOUTCHOUTEE | GUMMIRAD | RUEDA DE CAUCHO |
| 41 | F06120181 | ANELLO IN GOMMA 1 POLLICE MT | RUBBER RING 1X12' | COUVERT FARMF ROUE COMPR 1"X12 | MANTEL FARMF.R.DRUCK .MT | CUBIERTA FARMF. R. COMPR. MT |
| 42 | G56345119 | SEMICERCHIO PLAST.NERO 400X115 | PLASTIC WHEEL HALF RIM 400X115 | DEMI-JANTE PLAST. ROUE 400X115 | HALBFELGE PLA RAD 400X115 | SEMIARO PL-ST.RUEDA 400X115 |
| 43 | F06120075 | RUOTA DA 2 POLLICI MT | RUBBER WHEEL 2'X13' PLA.2 BEAR | ROUE CAOUTCHOUTEE | GUMMIRAD | RUEDA DE CAUCHO |
| 44 | F06120165 | COPERTURA 2' X 13' | RUBBER RING 2X13' | COUVERT FARMF ROUE COMPR 2"X13 | MANTEL 2' X 13' | CUBIERTA 2' X 13' |
| 45 | F02200227 | COPIGLIA 5X 30 U1336 ZN | SPLIT PIN 5 X30 1336 GALVAN. | GOUPILLE 5 X30 1336 ZN | SPLINT 5 X30 1336 ZN | PASADOR 5 X30 1336 ZN |
| 46 | G15224790 | RUOTA GHISA POST.COMPL. | COMPL. REAR CAST IRON WHEEL | ROUE FONTE ARRI+RE COMPL+TE | HINTERES GUSSEISENRAD KOMPL. | RUEDA FUNDICIËN TRAS.COMPL. |
| 47 | G15224800 | RUOTA POSTERIORE GS | REAR WHEEL | ROUE ARRIERE | HINTERRAD | RUEDA TRASERO |
| 48 | G16242190 | SUPPORTO CUSCINETTO | BEARING SUPPORT | SUPPORT PALIER | LAGERBsCHSE | SOPORTE COJINETE |
| 49 | F04010156 | CUSC.d20 D47 B14 6204 2RSH | | | | |
| 50 | G15224810 | BOCCOLA 20,5X25X3 | BUSH 20.5X25X3 | DOUILLE 20,5X25X3 | BUCHSE 20,5X25X3 | MANGUITO 20,5X25X3 |
| 51 | G15423850 | BOCCOLA RUOTA FERRO | STEEL WHEEL BUSH | DOUILLE ROUE FER | BÜCHSE EISENRAD | BUJE RUEDA DE HIERRO |
| 52 | F01040091 | VITE M 8X1,25X20 U5931 8.8 ZN | SCREW 8 X20 5931 8.G ZN | VIS 8 X20 5931 8.G ZN | SCHRAUBE 8 X20 5931 8.G ZN | TORNILLO 8 X20 5931 8.G ZN |
| 53 | F01220022 | DADO M 8X1,25 D980 8 ZN | SELF LOCKING NUT M8X1,25 980V | ECROU AUTOBL. M8X1,25 980-V | SELBSTSP.MUTT. M8X1,25 980-V | DADO AUTOBL. M8X1,25 980-V |
| 54 | F01230034 | DADO M 8X1,25 D982 8 | SELF LOCKING NUT M8X1,25 | ECROU AUTOBL. M8X1,25 | SELBSTSP.MUTT. M8X1,25 | DADO AUTOBL. M8X1,25 |
| 55 | G18903741 | MOLLA FERMO MANIGL.MAGICA>2004 | HANDLE STOP SPRING MAGICA 2004 | RESSORT ARRET POIG.MAGICA 2004 | FEDER GRIFFSPERRE MAGICA 2004 | MUELLE BLOQUEO MAN. MAGICA 04 |
| 56 | G15225020 | RUOTA PROFONDITA' MT COMPL. | DEPTH WHEEL MT ASSY. | ROUE PROFONDEUR MT COMPL. | TIEFENRAD MT KOMPLETT | RUEDA PROF.MT COMPL. |
| 57 | F06120189 | COPERTURA FARMFLEX 400X65 | COVERING FARMFLEX 400X65 | COUVERTURE FARMFLEX 400X65 | MANTEL FARMFLEX 400X65 | CUBIERTA FARMFLEX 400X65 |
| 58 | G15225012 | RASCHIATERRA RUOTE COMPRES.65 | SOIL SCRAPER PRESS WHEEL 65 | D+CROTTOIR ROUES DE COMPRESSIO | ABSTREIFER DRUCKROLLE 65 | RASCADOR TIERRA RUEDAS COMPRES |
| 59 | F01020440 | VITE M 8X1,25X25 U5739 8.8 ZN | BOLT M8 X25 5739 8.8 ZN | VIS M8 X25 5739 8.8 ZN | SCHRAUBE M8 X25 5739 8.8 ZN | TORNILLO M8 X25 5739 8.8 ZN |
| 60 | F06120145 | SEMICERCHIO 400X65 | HALF RIM 400X65 | DEMI-JANTE 400X65 | HALBFELGE 400X65 | SEMIARO 400X65 |
| 61 | G19703480 | TARGHETTA REG.RUOTE COMPRESS. | PLATE | PLAQUET | PLATTE | PLACA |
| 62 | F02250066 | RIVETTO STR. 3X 9 U9200A AL | POP RIVET 3X9 ALUMINIUM | RIVET 3 X 9 ALL | REISSNIETE 3 X 9 ALU | REMACHE DESGAR. 3 X 9 AL |

# TAV. 150

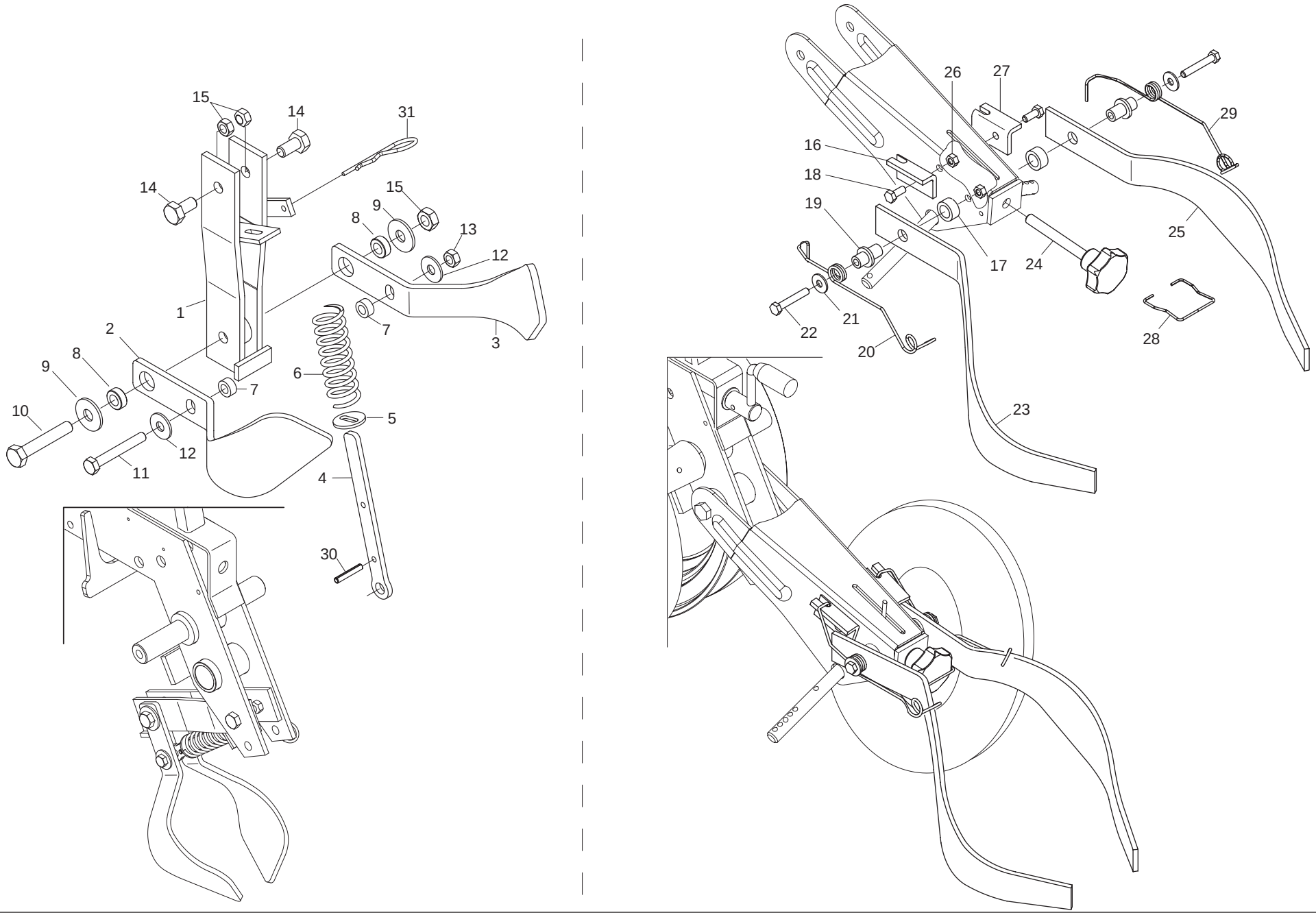




GASPARDO

## *COPRISEMI ANTERIORI E POSTERIORI PER RUOTE A “V” “MT”*

TAV. 150

| Pos. | Cod. | Descrizione | Description | Description | Benennung | Descripcion |
|---|---|---|---|---|---|---|
| 1 | G15224182 | SUPPORTO COPRISEME | SEED COVER SUPPORT | SUPPORT COUVRE-GRAINES | SAMENABDECKERHALTERUNG | SOPORTE CUBRESEMILLAS |
| 2 | G15224461 | COPRISEME SX | LEFT SEED COVER | COUVRE-GRAINES GCH. | SAMENABDECKER LINKS | CUBRESEMILLA IZQ. |
| 3 | G15224451 | COPRISEME DX | RIGHT SEED COVER | COUVRE-GRAINES DRT. | SAMENABDECKER RECHTS | CUBRESEMILLA DER. |
| 4 | G15224431 | SCORRIMOLLA | | | | |
| 5 | G15224440 | RONDELLA 6X28X2,5 ASOLATA | SLOT WASHER 6X28X2,5 | RONDELLE A BOUTON.6X28X2,5 | TSENSCHEIBE 6X28X2,5 | ARANDELA DE OJETE 6X28X2,5 |
| 6 | G18904220 | MOLLA COPRISEME | SEED COVERING TINE | RESSORT COUVRE-GRAINES | SAMENABDECKFEDER | MUELLE CUBRESEMILLAS |
| 7 | G20980050 | BOCCOLA 15X7X8,5 ZN | BUSHING 15X7X8-5 ZN | BOITE 15X7X8-5 ZN | BsCHSE 15X7X8-5 ZN | CASQUILLO 15X7X8-5 ZN |
| 8 | G20980022 | BOCCOLA 18X10,25X7 | BUSHING 18X10-25X7 | BOITE 18X10-25X7 | BsCHSE 18X10-25X7 | CASQUILLO 18X10-25X7 |
| 9 | F01420060 | ROS.M10 10,5X 30X2,5 U6593 ZG | WASHER 10,5X30 | RONDELLE 10,5X30 | SCHEIBE 10,5X30 | ARANDELA 10,5X30 |
| 10 | F01020118 | VITE M10X 1,5X60 U5737 8.8 ZG | BOLT 10X60 5737 8.G GALVANIZED | VIS 10X60 5737 8.G ZN | SCHRAUBE 10X60 5737 8.G ZN | TORNILLO 10X60 5737 8.G ZN |
| 11 | F01020077 | VITE M 8X1,25X60 U5737 8.8 ZG | BOLT M 8X55 | VIS M 8X55 | SCHRAUBE M 8X55 | TORNILLO M 8X55 |
| 12 | F01410051 | ROS.M8 8,4X 17X1,6 U6592 ZG | PLANE WASHER D.8 | RONDELLE D.8 | SCHEIBE D.8 | ARANDELA D.8 |
| 13 | F01230034 | DADO M 8X1,25 D982 8 | SELF LOCKING NUT M8X1,25 | ECROU AUTOBL. M8X1,25 | SELBSTSP.MUTT. M8X1,25 | DADO AUTOBL. M8X1,25 |
| 14 | F01020470 | VITE M10X 1,5X20 U5739 8.8 ZG | BOLT M 10X20 | VIS M 10X20 | SCHRAUBE M 10X20 | TORNILLO M 10X20 |
| 15 | F01220033 | DADO M10X 1,5 D980 8 ZG | NUT M10X 1,5 D980 8 ZB | ECRO.M10X 1,5 D980 8 ZB | MUTT.M10X 1,5 D980 8 ZB | TUER.M10X 1,5 D980 8 ZB |
| 16 | G15223920 | FERMO MOLLA SX | LEFT SPRING STOP | ARRET RESSORT GCH. | FESTSTELLVORRICHTUNG FEDER LI. | BLOQUEO MUELLE IZQ. |
| 17 | G20980081 | BOCCOLA 25X12X16,25 | BUSHING 25X12X16-25 | BOITE 25X12X16-25 | BsCHSE 25X12X16-25 | CASQUILLO 25X12X16-25 |
| 18 | F01020436 | VITE 8 X20 5739 8.G ZN | BOLT M 8X20 | VIS M 8X20 | SCHRAUBE M 8X20 | TORNILLO M 8X20 |
| 19 | G15223900 | PERNO AGGANCIO MOLLA | SPRING HOOK PIN | PIVOT FIXATION RESSORT | ZAPFEN FEDERKUPPLUNG | PERNO ENGANCHE MUELLE |
| 20 | G18902920 | MOLLA COPRISEME SX SP | LEFT SEED COVER SPRING SP | RESSORT COUVRE-GRAINE GCH SP | FEDER SAMENABDECKER LI SP | MUELLE CUBRESEMILLAS IZQ SP |
| 21 | F01420048 | ROND.PIANA 9X 24X2 6593 ZN | PLANE WASHER D.8 | RONDELLE D.8 | SCHEIBE D.8 | ARANDELA D.8 |
| 22 | F01020072 | VITE M 8X1,25X50 U5737 8.8 ZG | BOLT M 8X1,25X50 U5737 8.8 ZG | VIS M 8X1,25X50 U5737 8.8 ZG | SCHRAUBE M 8X1,25X50 U5737 8.8 | TORNILLO M 8X1,25X50 U5737 8.8 |
| 23 | G22220059 | COPRISEME SINISTRO | LEFT CORN SEED COVER | COUVRE-GRAINES GCH. | SAMENABDECKER LINKS | CUBRESEMILLA IZQUIERDO |
| 24 | F06220012 | VOLANTINO 4 LOBI M12X100 | HANDWHEEL M12X100 | VOLANT M12X100 | HANDRAD M12X100 | VOLANTE M12X100 |
| 25 | G22220060 | COPRISEME DESTRO | RIGHT SEED COVER | COUVRE-GRAINES DRT. | SAMENABDECKER RECHTS | CUBRESEMILLA DERECHO |
| 26 | F01220022 | DADO M 8X1,25 D980 8 ZG | SELF LOCKING NUT M8X1,25 980V | ECROU AUTOBL. M8X1,25 980-V | SELBSTSP.MUTT. M8X1,25 980-V | DADO AUTOBL. M8X1,25 980-V |
| 27 | G15223910 | FERMO MOLLA DX | RIGHT SPRING STOP | ARRET RESSORT DRT. | FESTSTELLVORRICHTUNG FEDER RE. | BLOQUEO MUELLE DER. |
| 28 | G18902660 | MOLLA SPEC.ZN FERMO SV MINI | SPEC. GALV. SPRING STOP SV MIN | RESSORT SPEC. ZN ARRET SV MINI | SPEZ.FEDER ZN FESTSTELL-VOR. S | MUELLE ESPEC.ZN BLOQUEO SV MIN |
| 29 | G18902910 | MOLLA COPRISEME DX SP | RIGHT SEED COVER SPRING SP | RESSORT COUVRE-GRAINE DRT SP | FEDER SAMENABDECKER RE SP | MUELLE CUBRESEMILLAS DER SP |
| 30 | F02100087 | SPINA E.P. 5X 30 U6873 C70 BR | PIN EL. 5 X30 DIN 1481 | FICHE EL. 5 X30 DIN 1481 | SPANNSTIFT 5 X30 DIN 1481 | CLAVIJA EL.5 X30 DIN 1481 |
| 31 | F02200363 | COPIGLIA R 3X 62 ZG | SPLIT PIN R 3X62 | GOUPILLE R 3X62 | SPLINT R 3X62 | CHAVETA R 3X62 |

TAV. 160

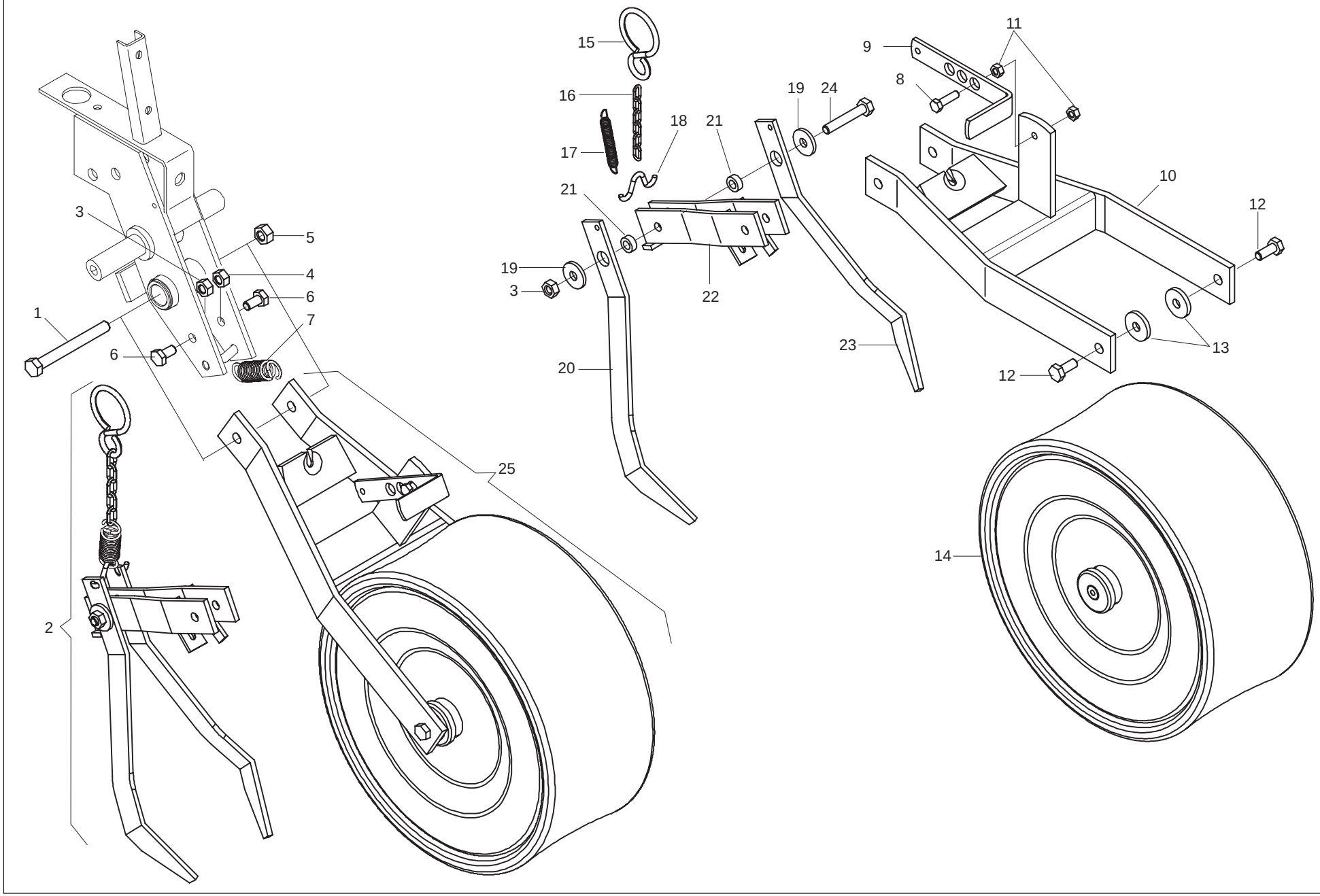




GASPARDO

## *RUOTA COMPRESSIONE FARMFLEX Ø370 (CON COPRISEME ANTERIORE) "MT"*

TAV. 160

| Pos. | Cod. | Descrizione | Description | Description | Benennung | Descripcion |
|---|---|---|---|---|---|---|
| 1 | F01020172 | VITE M12X1,75X110 5737 8.8 ZG | BOLT 12X110 5737 8.G GALVANIZ. | VIS 12X110 5737 8.G ZN | SCHRAUBE 12X110 5737 8.G ZN | TORNILLO 12X110 5737 8.G ZN |
| 2 | G15224290 | MONT.SUPPORTO COPRISEME | SEED COVERING WHEEL SUPPORT PO | MONT.SUPPORT RECOUVRE-GRAINES | MONT.ZUSTREIFERHALTERUNG | MONT.SOPORTE CUBRESEMILLA |
| 3 | F01200270 | DADO 10 5588 6.8 ZN | NUT M10 | ECROU M10 | MUTTER M10 | DADO M10 |
| 4 | F01220033 | DADO M10X 1,5 D980 8 ZG | NUT M10X 1,5 D980 8 ZB | ECRO.M10X 1,5 D980 8 ZB | MUTT.M10X 1,5 D980 8 ZB | TUER.M10X 1,5 D980 8 ZB |
| 5 | F01220048 | DADO M12X1,75 D980 8 ZG | SELF LOCKING NUT M12X1,75 980V | ECROU AUTOBL. M12X1,75 980-V | SIEHE 00553312 | DADO AUTOBL. M12X1,75 980-V |
| 6 | F01020470 | VITE M10X 1,5X20 U5739 8.8 ZG | BOLT M 10X20 | VIS M 10X20 | SCHRAUBE M 10X20 | TORNILLO M 10X20 |
| 7 | G18902670 | MOLLA TRAZ.ZN PRESS.SV-MINI | GALV. PRESS. SV-MINI TRACT.SPR | RESSORT TRACT.ZN PRESS.SV-MINI | ZUGFEDER ZN DRUCK SV - MINI | MUELLE TRACC.ZN PRES.SV-MINI |
| 8 | F01020445 | VITE 8 X30 5739 8.G ZN | BOLT M 8X30 | VIS M 8X30 | SCHRAUBE M 8X30 | TORNILLO M 8X30 |
| 9 | G15224240 | STAFFA REGOLAZ.MOLLA | SPRING ADJUSTMENT BRACKET | BRIDE REGLAGE RESSORT | BsGEL FEDEREINSTELLUNG | ESTRIBO REGULAC.MUELLE |
| 10 | G15224230 | SUPPORTO RUOTA FARMFLEX | WHEEL SUPPORT FARMFLEX | SUPPORT ROUE FARMFLEX | RADHALTERUNG FARMFLEX | SOPORTE RUEDA FARMFLEX |
| 11 | F01200244 | DADO M 8X1,25 U5588 6.8 ZG | NUT M8 | ECROU M8 | MUTTER M8 | DADO M8 |
| 12 | F01020472 | VITE M10X 1,5X25 U5739 8.8 ZG | BOLT 10X25 5739 8.G GALVANIZED | VIS 10X25 5739 8.G ZN | SCHRAUBE 10X25 5739 8.G ZN | TORNILLO 10X25 5739 8.G ZN |
| 13 | G18701140 | RONDELLA 11 X35 X5 | WASHER 11 X 35 X 5 | RONDELLE 11 X35 X5 | UNTERLEGSCHEIBE 11 X35 X5 | ARANDELA 11 X35 X5 |
| 14 | G14821590 | RUOTA FARMFLEX 370X165 PROF.A | FARMFLEX WHEEL 370X165 DEPTH.A | ROUE FARMFLEX 370X165 PROF.A | RAD FARMFLEX 370X165PROF.A | RUEDA FARMFLEX |
| 15 | G65336004 | MOLLA SPEC.ZN AGG.SEMINAT. SP | SPEC SPRING- ZN ADD. SEEDER SP | RESSORT SPEC. ZN ATTELAGE SEME | SPEZIALFEDER ZN SZELEM. KUPPL. | MUELLE ESPEC. ZN CONEX. SEMBRA |
| 16 | G15224260 | CATENA L.122 | CHAIN L.122 | CHAINE L.122 | KETTE L.122 | CADENA L.122 |
| 17 | G65337005 | MOLLA TRAZ.CAMBIO SV | TRACTION COUPLING SPRING- GEAR | RESSORT TRACT.BOITE DE VITESSE | ZUGFEDER GETRIEBE SV | MUELLE TRAC. CAMBIO SV |
| 18 | G15224250 | FERMO MOLLA | SPRING STOP | ARRET RESSORT | FESTSTELLVORRICHTUNG FEDER | BLOQUEO MUELLE |
| 19 | G20970012 | RONDELLA 32X4X11 | WASHER 32X4X11 | RONDELLE 32X4X11 | UNTERLEGSCHEIBE 32X4X11 | ARANDELA 32X4X11 |
| 20 | G15224280 | COPRISEME SX | LEFT CORN SEED COVER | COUVRE-GRAINES GCH. | SAMENABDECKER LINKS | CUBRESEMILLA IZQUIERDO |
| 21 | G20980022 | BOCCOLA 18X10,25X7 | BUSHING 18X10-25X7 | BOITE 18X10-25X7 | BsCHSE 18X10-25X7 | CASQUILLO 18X10-25X7 |
| 22 | G15224180 | SUPPORTO COPRISEME | SEED COVER SUPPORT | SUPPORT COUVRE-GRAINES | SAMENABDECKERHALTERUNG | SOPORTE CUBRESEMILLAS |
| 23 | G15224270 | COPRISEME DX | RIGHT SEED COVER | COUVRE-GRAINES DRT. | SAMENABDECKER RECHTS | CUBRESEMILLA DERECHO |
| 24 | F01020118 | VITE M10X 1,5X60 U5737 8.8 ZG | BOLT 10X60 5737 8.G GALVANIZED | VIS 10X60 5737 8.G ZN | SCHRAUBE 10X60 5737 8.G ZN | TORNILLO 10X60 5737 8.G ZN |
| 25 | G15224300 | RUOTA FARMFLEX COMPL | WHEEL- FARMFLEX | ROUE FARMFLEX COMPL. | RAD FARMFLEX KOMPL. | RUEDA FARMFLEX COMPL. |

TAV. 171

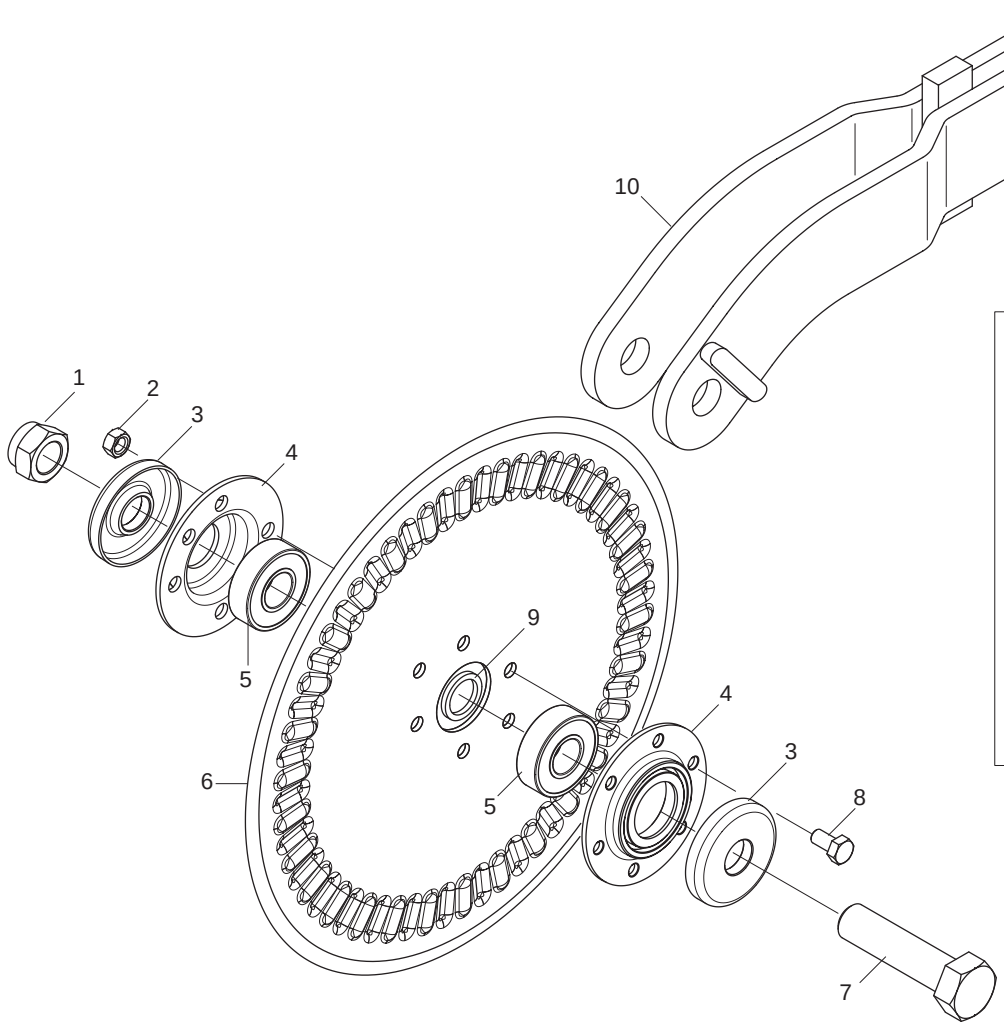


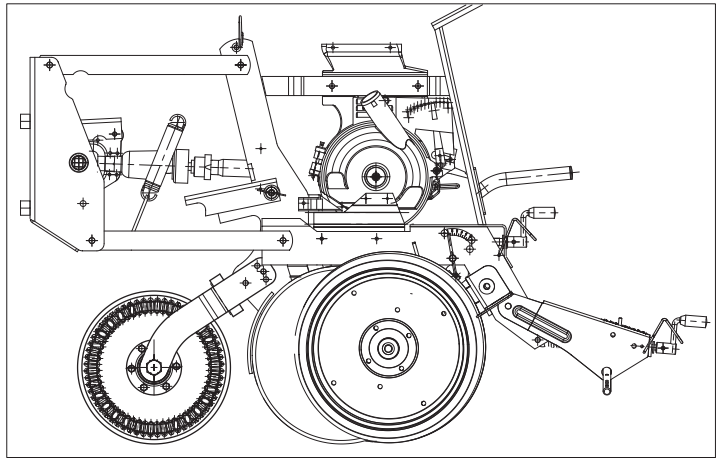



GASPARDO

## *COLTRO A DISCO STRIATO "MT"*

TAV. 171

| Pos. | Cod. | Descrizione | Description | Description | Benennung | Descripcion |
|---|---|---|---|---|---|---|
| 1 | F01230131 | DADO M20X 2,5 D982 6 ZN | NUT M20X 2,5 D982 6 ZB | ECRO.M20X 2,5 D982 6 ZB | MUTT.M20X 2,5 D982 6 ZB | TUER.M20X 2,5 D982 6 ZB |
| 2 | F01220022 | DADO M 8X1,25 D980 8 ZN | SELF LOCKING NUT M8X1,25 980V | ECROU AUTOBL. M8X1,25 980-V | SELBSTSP.MUTT. M8X1,25 980-V | DADO AUTOBL. M8X1,25 980-V |
| 3 | G16610430 | FONDELLO ZN. | | | | |
| 4 | G15226210 | FLANGIA SUPP.CUSCINETTO | BEARING SUPP. FLANGE | BRIDE SUPPORT PALIER | FLANSCH LAGERHALTERUNG | BRIDA SOPORTE COJINETE |
| 5 | F04010156 | CUSC.d20 D47 B14 6204 2RSH | | | | |
| 6 | G15226041 | DISCO STRIATO D.320 | DISK D.320 | DISQUE D.320 | SCHEIBE D.320 | DISCO D.320 |
| 7 | F01020325 | VITE M20X2,5X 90 U5737 10.9 ZD | BOLT 20X90 5737 10.9G GALVANI | VIS 20X90 5737 10.9G ZN | SCHRAUBE 20X90 5737 10.9G ZN | TORNILLO 20X90 5737 10.9G ZN |
| 8 | F01020436 | VITE M 8X1,25X 20 U5739 8.8 ZN | BOLT M 8X20 | VIS M 8X20 | SCHRAUBE M 8X20 | TORNILLO M 8X20 |
| 9 | G20970100 | RONDELLA 30X0,5X22 ACC. | WASHER 30X0-5X22 ACC. | RONDELLE 30X0-5X22 ACIER | UNTERLEGSCHEIBE 30X0-5X22 ACC. | ARANDELA 30X0-5X22 ACC. |
| 10 | G15226012 | SUPPORTO DISCO STRIATO | | | | |
| 11 | G15226220 | KIT COLTRO DISCO STRIATO 6F. | DISC COULTER KIT | KIT COUTRE DISQUE | KOLTERSCHEIBEKIT | KIT CUCHILLA DE ARADO DISCO |

TAV. 181

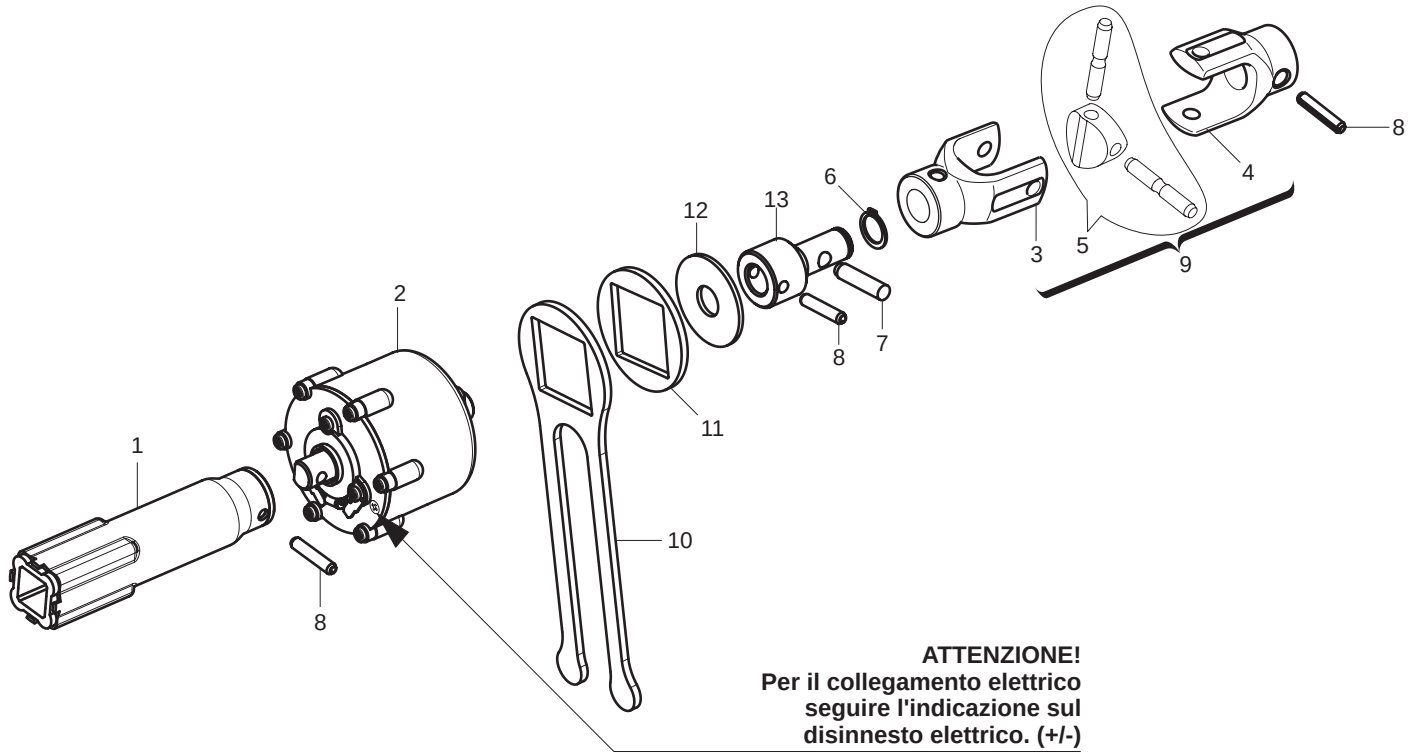




GASPARDO

## *ESCLUSIONE ELETTRICA FILE DI SEMINA "MT"*

TAV. 181

| Pos. | Cod. | Descrizione | Description | Description | Benennung | Descripcion |
|---|---|---|---|---|---|---|
| 1 | G15225323 | INNESTO ESCL.ELETTR.MT | | | | |
| 2 | G16033701 | DISINNESTO ELETTRICO 180 COMPL | COMPL. ELECTRIC RELEASE 180 | D+BRAYAGE +LECTRIQUE 180 COMPL | ELEKTRISCHE ENTKUPPLUNG 180 KO | DESCONEXIËN EL+CTRICA 180 COMP |
| 3 | G19204080 | FORCELLA | | | | |
| 4 | G19204090 | FORCELLA | | | | |
| 5 | G22270454 | CROCIERA COMPL. SP/S | SPIDER SP/S | CROSILLON COMPL CARDAN TRANSM | GELENKKREUZ KOMPL. SP/S | CRUCETA COMPL. SP/S |
| 6 | F02050045 | ANELLO E. DE 16X 1 U7435 C70 | SEEGER RING 16X 1 U7435 C70 | BAGUE SEEGER 16 X 1 U7435 C70 | SEEGERING 16 X 1 U7435 C70 | ANILLO 16X 1 U7435 C70 |
| 7 | G66248057 | SPINA DI SICUREZZA SP | SAFETY PIN SP | BROCHE PLASTIC SECURITE CARDAN | SICHERHEITSSTIFT SP | CLAVIJA DE SEGURIDAD SP |
| 8 | F02100114 | SPINA E.P. 6X 30 U6873 C70 BR | ELASTIC PIN 6X30 | GOUJON ELASTIQUE 6X30 | SPANNHUELSE 6X30 | ESPINA ELASTICA 6X30 |
| 9 | G15423980 | FORCELLE SNODO ESCL.ELET.COMPL | FORK ELECTRIC DISABLE COMPLET | FOURCHETTE EXCL. +LECTR. COMPL | STAFEL ELEKT.AUSSCHALTU KOMPL. | HORQUILLA DESC.EL+CTRICA COMPL |
| 10 | G16033750 | FERMO DISINNESTO ELETTRICO ZN | UNCOUPLING ELECTRIC STOP | ARRET DEBRAYAGE +LECT. | FESTSTELL. AUSKUPPLUNG EL. | BLOQUEO DESCONEXIN EL. |
| 11 | G16033740 | DISTANZIALE DISINNESTO ELET.ZN | UNCOUPLING ELECTRIC SPACER | ENTRETOISE DEBRAYAGE +LECT. | DISTANZST_CK AUSKUPPLUNG EL. | DISTANCIADOR DESCONEXIN EL. |
| 12 | G18701970 | RONDELLA 16X48X2,5 | WASHER 16X48X2,5 | RONDELLE 16X48X2,5 | UNTERLEGSCHEIBE 16X48X2,5 | ARANDELA 16X48X2,5 |
| 13 | G16033730 | ADATTATORE CROCIERA | SPIDER ADAPTOR | ADAPTATEUR CROISIERE | PASSST_CK GELENKKREUZ | ADAPTADOR CRUCETA |

# TAV. 200

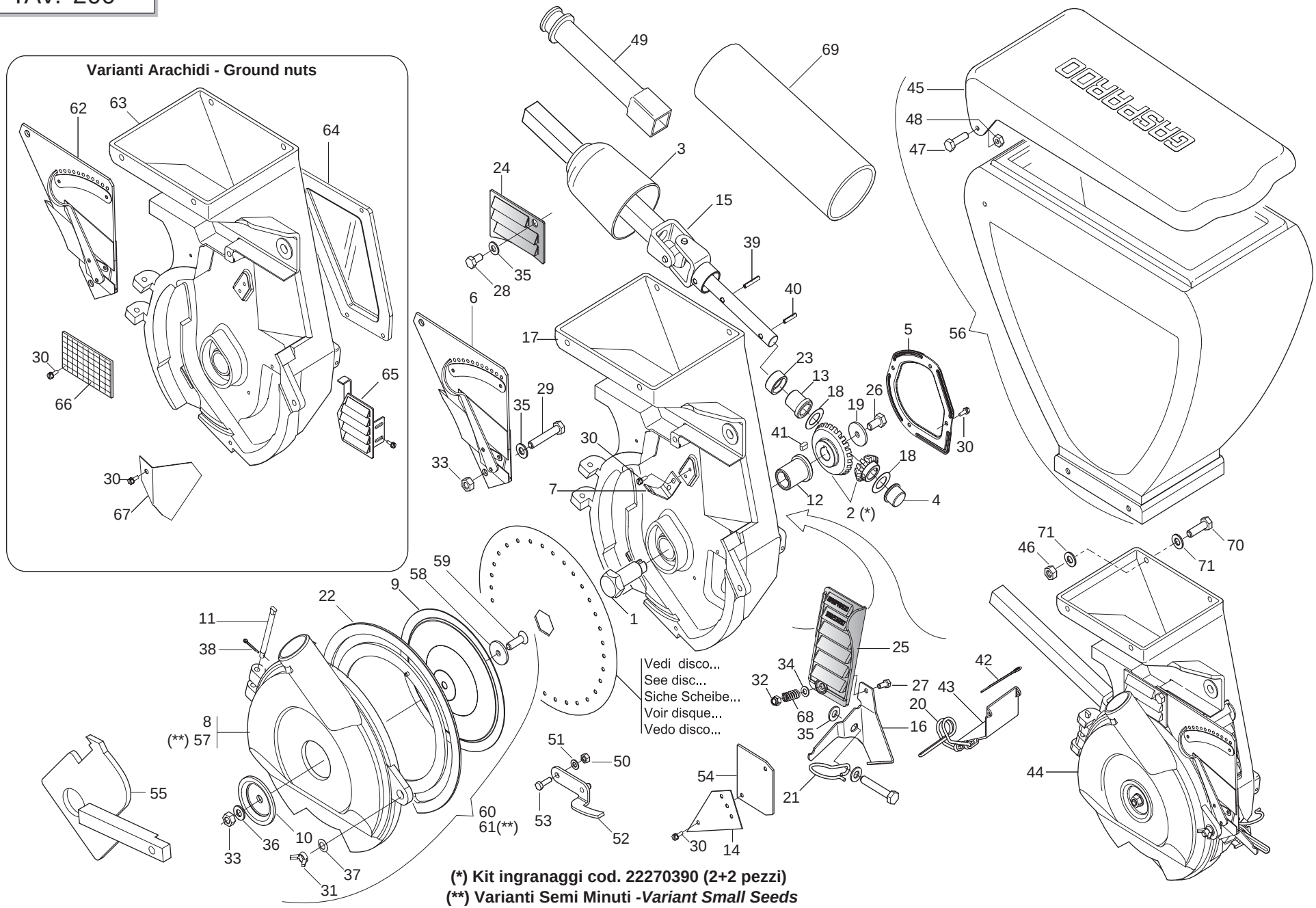


**(*) Kit ingranaggi cod. 22270390 (2+2 pezzi)**
**(**) Varianti Semi Minuti -*Variant Small Seeds***

## *DISTRIBUTORE SEMI "SP"*

TAV. 200

| Pos. | Cod. | Descrizione | Description | Description | Benennung | Descripcion |
|---|---|---|---|---|---|---|
| 1 | G22230046 | ASSE TRASMISSIONE DISCO | DISK GEAR AXLE | AXE ENTRAINEMENT DISQUE | ACHSE SCHEIBENANTRIEB | EJE TRANSMISIN DISCO A |
| 2 | G22270390 | KIT COPPIA CONICA DISTRIB.SEMI | KIT- SEED DISTR. CONICAL PAIR | COUPLE CON DISTR GRAINES (2+2) | KIT KEGELTRIEB SAMEN SZAPPARAT | SET PAR CONICO DISTRIB. SEMILL |
| 3 | G66248094 | COPRICARDANO SP | UNIVERSAL JOINT COVER SP | COUVRE-CARDAN SP | KARDANABDECKUNG SP | CUBRECARDæN SP |
| 4 | G66349008 | BOCCOLA | BUSHING | BOITE | BsCHSE | CASQUILLO |
| 5 | G22230035 | COPERCHIO SCATOLA INGRAN. | GEARWHEEL BOX COVER | COUVERCLE BOITE ENGRENAGE | DECKEL ZAHNRZDERGEHZUSE | TAPA CAJA ENGRAN. |
| 6 | G22230040 | SELETTORE MOBILE COMPLETO | MOBILE SELECTOR ASSY. | SELECTEUR MOBILE COMPL. | KOMPL. BEWEGLICHER WZHLER | SELECTOR MVIL COMPLETO S |
| 7 | G22230041 | SELETTORE FISSO | SELECTOR FIXED | SELECTEUR FIXE | FESTER WZHLER | SELECTOR FIJO |
| 8 | G22270205 | COPERCHIO MAGG.DISTRIB.SEME | INCREASED SEED DISTRIB. COVER | COUVERC. MAJOR.DISTRIB. GRAINE | sBERBEM. DECKEL SAMENSZAPPARAT | TAPA SOBREDIMENS. DISTRIB. SEM |
| 9 | G22230037 | TENUTA GUARNIZIONE | SEAL | BLOQUAGE GARNITURE | DICHTUNG | JUNTA ESTANCA |
| 10 | G16620470 | TAPPO CENTRALE H=7,5 | CENTRAL PLUG H=7.5 | BOUCHON CENTRAL H=7,5 | ZENTRALER PFROPFEN H=7,5 | TAPËN CENTRAL H=7,5 |
| 11 | G22230039 | PERNO COPERCHIO | COVER PIN | PIVOT COUVERCLE | DECKELZAPFEN | PERNO TAPA |
| 12 | G66349002 | BOCCOLA SINT.BASSOFONDO | BUSHING- SINTERED | BOITE FRITTEE | SYNTH. B_CHSE | CASQUILLO SINT. |
| 13 | G22270071 | BOCCOLA COLL.SINTER.20X24 | 20X24 SINTERED COLLARED BUSH | BOITE COLLIER FRITTEE 20X24 | ANSCHLUSSBUECHSE SINTER.20X24 | CASQUILLO CONEX. SINTER.20X24 |
| 14 | G22270204 | PIASTRA ANTI TRABOCC.SEMI SP | SEED ANTI-OVERFLOW PLATE SP | PLAQUE ANTI-DEBORD.T GRAINES S | SAMENsBERLAUFPLATTE SP | PLACA ANTI DESBORDAMIENTO SEMI |
| 15 | G15421141 | ASSE PORTA PIGNONE COMPL. | COMPL. PINION HOLDER SPINDLE | AXE PORTE PIGNON COMPL. | RITZELTRZGERACHSE KOMPLETT | EJE PORTAPI¾N COMPLETO A |
| 16 | G15421151 | FERMO MOLLA FALCIONE | CUTTER SPRING STOP | ARRET RESSORT HACHOIR | FESTSTELLVOR. FEDER FUTTERSCHN | BLOQUEO MUELLE GUADA¾ADORA |
| 17 | G16620120 | CORPO DI DISTRIBUZIONE SP540 | DISTRIBUTION ASSEMBLY SP540 | CORPS DE DISTRIBUTION SP540 | STREUBEH-LTER SP540 | CUERPO DISTRIBUCIËN SP540 |
| 18 | G22220073 | RONDELLA 28X0,3X16,5 | WASHER 28X0-3X16-5 | RONDELLE 28X0-3X16-5 | UNTERLEGSCHEIBE 28X0-3X16-5 | ARANDELA 28X0-3X16-5 |
| 19 | F01420037 | ROS.M6 6,4X 24X 2 U6593 ZG | WASHER 6,6X24X2 6593 ZN | RONDELLE 6,6X24X2 6593 ZN | UNTERLEGSCHEIBE 6,6X24X2 6593 | ARANDELA 6,6X24X2 6593 ZN |
| 20 | G18902951 | MOLLA SPEC.ZN SCARICO | SPEC SPRING ZN DISCHARGE | RESSORT TRAPPE VIDANGE | SPEZIALFEDER ZN ENTLADUNG | MUELLE ESPEC. ZN DESCARGA |
| 21 | G18903180 | MOLLA CONVOGLIATORE MICRO | MICRO CONVEYOR SPRING | RESSORT CONVOYEUR MICRO | FEDER MIKRO FTRDERER | MUELLE CONDUCTOR MICRO |
| 22 | G66248068 | GUARNIZIONE COPERCH.DISTR. SP | DISTRIB. COVER GASKET. SP | JOINT ETANCH PORTE SP520/540 | DICHTUNG SZAPPARATDECKEL SP | JUNTA TAPA DISTR. SP |
| 23 | G66248219 | ANELLO PARAPOLVERE SP-520 | DUST COVER RING | BAGUE PARE-POUSSIERE SP-520 | STAUBSCHUTZRING SP-520 | ANILLO GUARDAPOLVO SP-520 |
| 24 | G16620540 | PORTA DI PROTEZIONE | SAFETY HATCH | PORTE DE PROTECTION | SCHUTZÍFFNUNG | PUERTA DE PROTECCIËN |
| 25 | G16620530 | PORTA DI CONTROLLO | INSPECTION DOOR | PORTE CONTROLE | KONTROLLTsR | PUERTA DE CONTROL |
| 26 | F01020403 | VITE 6 X16 5739 8.G ZN | BOLT M 6X16 | VIS M 6X16 | SCHRAUBE M 6X16 | TORNILLO M 6X16 |
| 27 | F01020382 | VITE M 5X0,8X 25 U5739 8.8 ZG | BOLT 5 X25 5739 8.G GALVANIZ. | VIS 5 X25 5739 8.G ZN | SCHRAUBE 5 X25 5739 8.G ZN | TORNILLO 5 X25 5739 8.G ZN |
| 28 | F01020432 | VITE 8 X16 5739 8.G ZN | BOLT M 8X16 | VIS M 8X16 | SCHRAUBE M 8X16 | TORNILLO M 8X16 |
| 29 | F01020451 | VITE 8 X45 5739 8.G ZN | BOLT M 8X45 | VIS M 8X45 | SCHRAUBE M 8X45 | TORNILLO M 8X45 |
| 30 | F01070011 | VIT.A.4,2X1,41X 9,5 6950 4.8NI | BOLT- SELF-TAPPING 4-2X9-5T.E. | VIS AUTOTAR. 4-2X9-5 T. E. COU | SELBSTSCHNEID. SCHRAUBE 4-2X9- | TORNILLO AUTORROSC. 4-2X9-5 |
| 31 | F01240024 | DADO M 8X1,25 U5448 5.8 ZG | NUT 8 UNI 5448 5.8 ZN | ECROU 8 UNI 5448 5.8 ZN | MUTTER 8 UNI 5448 5.8 ZN | TUERCA 8 UNI 5448 5.8 ZN |
| 32 | F01230019 | DADO M 5X 0,8 D982 8 ZG | NORM.SELF-LOCKING NUT 5 GALVAN | ECROU AUTOB.NOR.5 ZN | SELBSTSP. MUTTER NOR.5 ZN | TUERCA AUTOB. NOR. 5 ZN |
| 33 | F01200244 | DADO M 8X1,25 U5588 6.8 ZG | NUT M8 | ECROU M8 | MUTTER M8 | DADO M8 |
| 34 | F01410023 | ROS.M5 5,3X 10X 1 U6592 ZG | WASHER D5 UNI 6592 ZN | RONDELLE D5 UNI 6592 ZN | UNTERLEGSCHEIBE D5 UNI 6592 ZN | ARANDELA D5 UNI 6592 ZN |
| 35 | F01410051 | ROS.M8 8,4X 17X1,6 U6592 ZG | PLANE WASHER D.8 | RONDELLE D.8 | SCHEIBE D.8 | ARANDELA D.8 |
| 36 | F01430059 | ROS.M8 8,4X 15X0,8 U8842J ZG | WASHER D8 DIN 6798 D.INT.ZN | RONDELLE D8 DIN 6798 D. INT. Z | UNT. SCHEIBE D8 DIN 6798 D. IN | ARANDELA D8 DIN 6798 D.INT.ZN |
| 37 | F01460115 | ROS.OND. 8,4X 15X0,5 BR D137A | WASHER D8 DIN 137/A | RONDELLE D8 DIN 137/A | UNTERLEGSCHEIBE D8 DIN 137/A | ARANDELA D8 DIN 137/A |
| 38 | F02200137 | COPIGLIA 2X 15 U1336 ZG | SPLIT PIN 2 X15 1336 GALVAN. | GOUPILLE 2 X15 1336 ZN | SPLINT 2 X15 1336 ZN | PASADOR 2 X15 1336 ZN |
| 39 | F02100079 | SPINA E.P. 5X 16 U6873 C70 BR | PIN EL. .5 X20 DIN 1481 | FICHE EL. 5 X20 DIN 1481 | SPANNSTIFT 5X20 DIN 1481 | CLAVIJA EL.5 X20 DIN 1481 |
| 40 | F02100083 | SPINA E.P. 5X 24 U6873 C70 BR | PIN EL. 5 X24 DIN 1481 | FICHE EL. 5 X24 DIN 1481 | SPANNSTIFT 5 X24 DIN 1481 | CLAVIJA EL.5 X24 DIN 1481 |
| 41 | F02150012 | LINGUETTA 5X 5X 10 U6604A | TAB 05X5X10 UNI6604 | LANGUETTE 05X5X10 UNI6604 | FEDERKEIL 05X5X10 UNI6604 | LENGsETA 05X5X10 UNI6604 |
| 42 | F02200200 | COPIGLIA 4X 70 U1336 ZG | SPLIT PIN 4 X70 1336 GALVAN. | GOUPILLE 4 X70 1336 ZN | SPLINT 4 X70 1336 ZN | PASADOR 4 X70 1336 ZN |
| 43 | G15421870 | PORTA DI SCARICO DISTRIBUTORE | DISTRIBUTOR DISCHARGE DOOR | PORTE DE DECHARGEMENT DISTRIB, | ENTLADUNGSTsR SZAPPARAT | PUERTA DESCARGA DISTRIBUIDOR |
| 44 | G16620101 | CORPO DISTRIBUTORE COMPL.SP540 | COMPL. DISTRIBUTOR BODY SP540 | CORPS DISTRIBUTEUR COMPL.SP540 | STREUERKÍRPER, KOMPL.SP540 | CUERPO DISTRIBUIDOR COMPL.SP54 |
| 45 | G19002750 | COPERCHIO SERBATOIO SEME 530 | SEED TANK COVER 530 | COUVERCLE RES GRAINES 530-MT | SAMENBEHZLTERDECKEL 530 | TAPA DEPSITO SEMILLA 530 A |
| 46 | F01220011 | DADO M 6X 1 D980 8 ZG | SELF LOCKING NUT M6 | ECROU AUTOBL. M6 | SELBSTSPERR.MUTTER M6 | DADO AUTOBL. M6 |
| 47 | F01020403 | VITE 6 X16 5739 8.G ZN | BOLT M 6X16 | VIS M 6X16 | SCHRAUBE M 6X16 | TORNILLO M 6X16 |
| 48 | F01200232 | DADO M 6X 1 U5588 6.8 ZG | NUT 6 UNI 5588 6.8 GALVANIZED | ECROU 6 UNI 5588 6.8 ZN | MUTTER 6 UNI 5588 6.8 ZN | TUERCA 6 UNI 5588 6.8 ZN |
| 49 | G15421830 | INNESTO | COUPLING | ACCOUPLEMENT | KUPPLUNG | ACOPLAMIENTO |
| 50 | F01200220 | DADO M 5X 0,8 U5588 6.8 ZG | NUT 5 UNI 5588 6.8 GALVANIZED | ECROU 5 UNI 5588 6.8 ZN | MUTTER 5 UNI 5588 6.8 ZN | TUERCA 5 UNI 5588 6.8 ZN |
| 51 | F01430035 | ROS.M5 5,3X 10X0,6 U8842J ZG | WASHER D5 DIN 6798 D.INT.ZN | RONDELLE D5 DIN 6798 D. INT. Z | UNT. SCHEIBE D5 DIN 6798 D. IN | ARANDELA D5 DIN 6798 D.INT.ZN |
| 52 | G16620010 | ESPULSORE SEMI BIETOLA | SUGAR BEET EJECTOR | EXPULSEUR BETTES | AUSWERFER RÜBEN | EXPULSOR REMOLACHA |
| 53 | F01020381 | VITE M5X 0,8X 20 U5739 A2 IX | BOLT 5X20 5739 | VIS 5X20 5739 | SCHRAUBE 5X20 5739 | TORNILLO 5X20 5739 |
| 54 | G22270133 | PIASTRINA ANTI TRABOC.SEMI MIN | MINUTE SEED PLATE SP | PLAQUETTE GRAINES PETITES SP | PLZTTCHEN KLEINE SAMEN SP | PLAQUETA SEMILLAS PEQUE¾AS SP |
| 55 | G16620360 | DIMA SELETTORE FISSO | POSITION PLATE FOR FIXED SELEC | GABARIT POSITION SELECTEUR FIX | EINSTELLEHRE F_R FIXEN ABSTREI | PLACA PARA LA POSICIËN SELECTO |

# TAV. 200

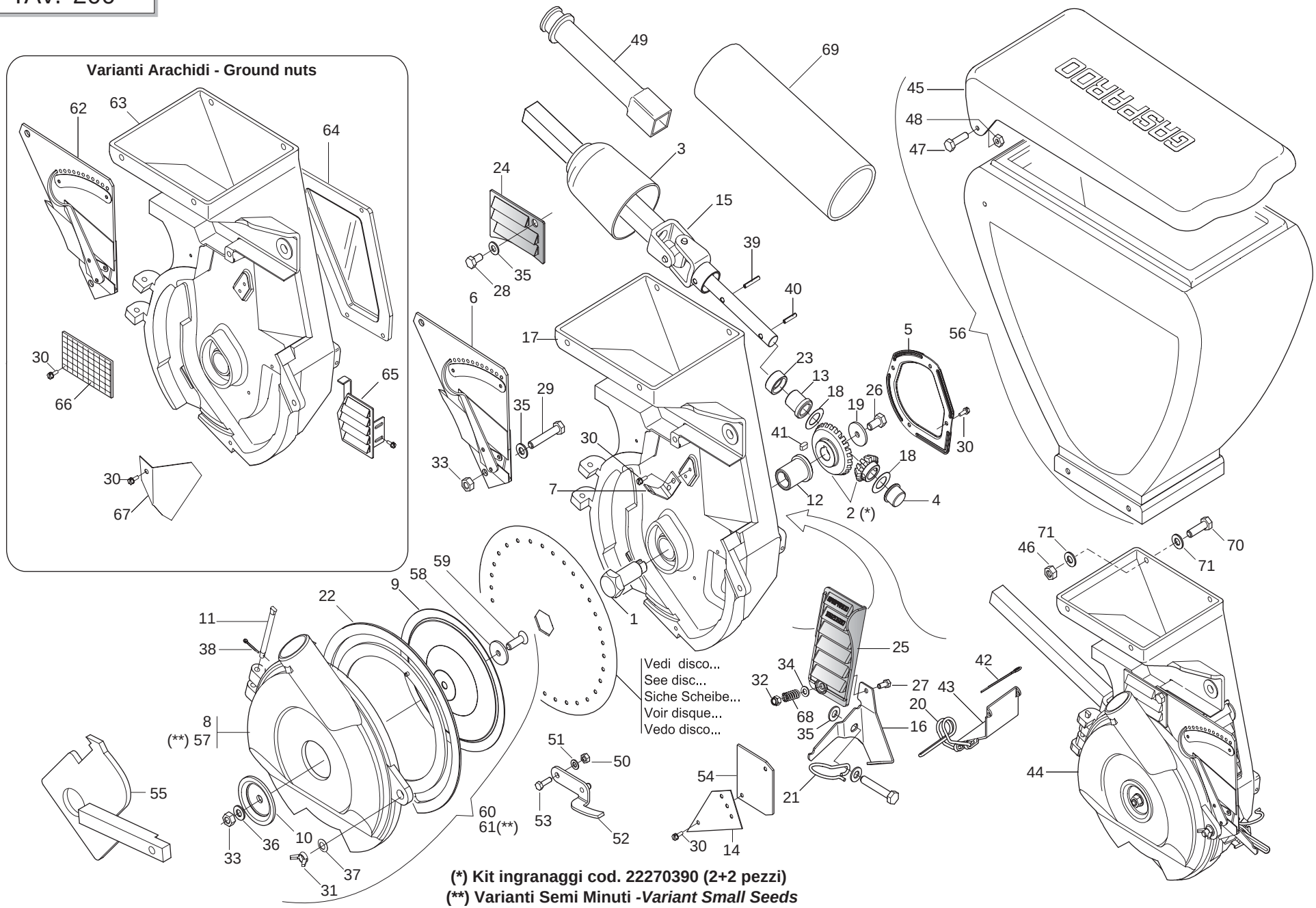


**(*) Kit ingranaggi cod. 22270390 (2+2 pezzi)**
**(**) Varianti Semi Minuti -*Variant Small Seeds***

## *DISTRIBUTORE SEMI "SP"*

TAV. 200

| Pos. | Cod. | Descrizione | Description | Description | Benennung | Descripcion |
|---|---|---|---|---|---|---|
| 56 | G15422241 | SERBATOIO SEME COMPLETO SP | SEED TANK ASSY. | RESERVOIR GRAINES COMP PLA SP | SAMENBEHZLTER KOMPLETT | DEPSITO SEMILLAS COMPLETO B |
| 57 | G16620450 | COPERCHIO MAGGIORATO SEMI MIN. | INCREASED SEED DISTRIB. COVER | COUVERC. MAJOR.DISTRIB. GRAINE | _BERBEM. DECKEL SAMENSZAPPARAT | TAPA SOBREDIMENS. DISTRIB. SEM |
| 58 | G18701890 | RONDELLA D.8,5 SVASATA ZN. | FLARED WASHER D.8.5 ZN. | RONDELLE D.8,5 +VAS+E ZN. | F-CHERSCHEIBE D.8,5 ZN. | ARANDELA Ï 8,5 ABOCINADA ZN. |
| 59 | F01030055 | VITE M 8X1,25X20 U5933 8.8 ZG | BOLT M 8X20 | VIS M 8X20 | SCHRAUBE M 8X20 | TORNILLO M 8X20 |
| 60 | G13822440 | COPERCHIO MAGGIOR.D45 COMPLETO | ASSY.INCREASED COVER | COUVERC. MAJOR.COMPL. | sBERBEM. DECKEL KOMPLETT | TAPA SOBREDIMENS. COMPLETO |
| 61 | G16620460 | COPERCHIO SEMI MINUTI COMPL. | COMPL. MINUTE SEED COVER | COUVERCLE GRAINES PETITES COMP | DECKEL KLEINSAMEN KOMPL. | TAPA SEMILLAS PEQUEðAS COMPL |
| 62 | G22270128 | SELETTORE MOBILE ARACHIDI SP | MOBILE SELECTOR- PEANUTS SP | SELECTEUR MOBILE ARACHIDES SP | BEWEGLICHER WZHLER ERDNsSSE SP | SELECTOR MVIL CACAHUETES. S |
| 63 | G15422520 | CORPO DISTRIBUTORE ARACHIDI SP | PEANUT DISTRIBUTION CASING | CORPS DE DISTRIBUTION ARACHIDE | VERTEILUNGSKTRPER ERDNsSSE | CUERPO DE DISTRIBUC.CACAHUETES |
| 64 | G22270132 | FINESTRELLA CONTR.ARACHIDI SP | PEANUT CONTRA. WINDOW SP | FENETRE CONTR. ARACHIDES SP | LUKE ERDNUSSKONTROLLE SP | VENTANILLA CONTR. CACAHUETES. |
| 65 | G22230033 | PORTA CONTROLLO SEME | SEED INSPECTION DOOR | PORTE CONTROLE GRAINES | KONTROLLTsR SAMEN | PUERTA DE CONTROL SEMILLAS |
| 66 | G22270095 | GRIGLIA PROTEZIONE SP | PROTECT. GRID SP | GRILLE PROTECTION SP | SCHUTZGITTER SP | REJILLA PROTECCIN SP G |
| 67 | G22270130 | PIASTRINA ANTI TRABOC.ARACHIDI | PEANUT CLOSING PLATE | PLAQUETTE FERMETURE ARACH. SP | ABSCHLUSSPLZTTCHEN ERDNsSSE SP | PLAQUETA CIERRE CACAHUETES SP |
| 68 | G18904240 | MOLLA APERTURA PORTA CONTROLLO | SPRING | RESSORT | FEDER | MUELLE |
| 69 | G19005100 | TUBO D.63X3X280 NERO | PIPE D.63X3X280 | TUBE D.63X3X280 | ROHR D.63X3X280 | TUBO D.63X3X280 |
| 70 | F01020404 | VITE M 6X 1X20 U5739 8.8 ZG | BOLT 6X20 5739 8.G GALVANIZED | VIS 6X20 5739 8.G ZN | SCHRAUBE 6X20 5739 8.G ZN | TORNILLO 6X20 5739 8.G ZN |
| 71 | F01420036 | ROS.M6 6,4X 18X 2 U6593 ZG | FLAT WASHER 6-6X 18X2 6593 ZN | ROND. PLATE 6-6X 18X2 6593 ZN | SCHEIBE 6-6X 18X2 6593 ZN | ARAND. PLANA 6-6X 18X2 6593 ZN |
| 72 | G16620061 | CORPO DISTRIBUZIONE BIETOLE | BEET DISTRIBUTION ASSEMBLY | CORPS DISTRIBUTION BETTERAVES | STREUBEH-LTER R_BEN | CUERPO DISTRIBUCIËN REMOLACHAS |

TAV. 191

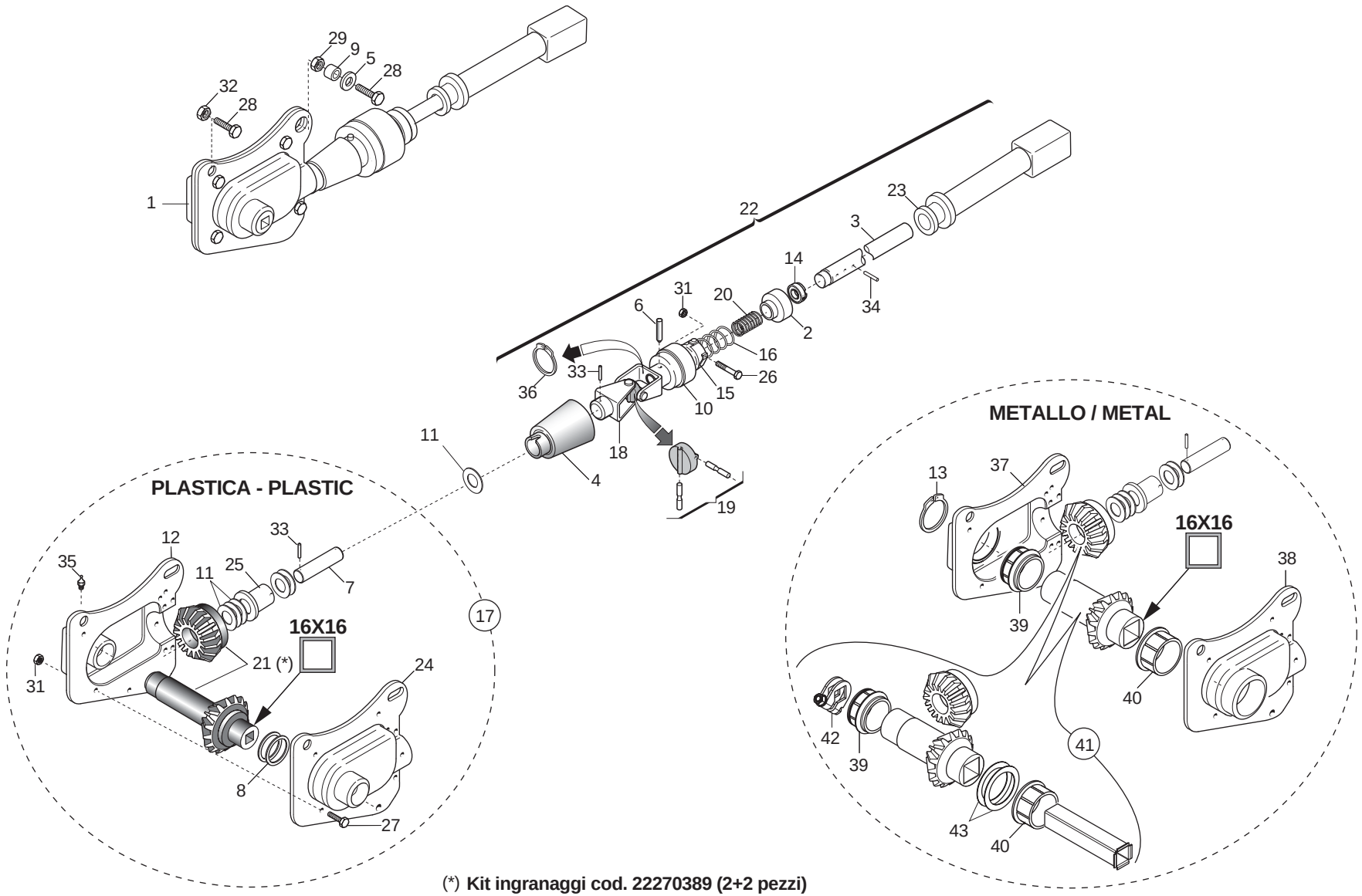


(*) **Kit ingranaggi cod. 22270389 (2+2 pezzi)**

## *SCATOLA DI RINVIO ELEMENTO “SP”*

TAV. 191

| Pos. | Cod. | Descrizione | Description | Description | Benennung | Descripcion |
|---|---|---|---|---|---|---|
| 1 | G16621060 | MONT.SCATOLA RINVIO Q.16 EL.SP | | | | |
| 2 | G66248102 | ANELLO SICUREZZA SP | SAFETY RING | BAGUE SECURITE SP | SICHERHEITSRING SP | ANILLO DE SEGURIDAD SP |
| 3 | G15220691 | ASSE AVVISATORE MT | SIGNALLING AXIS MT | AXE AVERTISSEUR MT | ACHSE SIGNALHUPE MT | EJE INDICADOR MT |
| 4 | G19002840 | COPRICARDANO SUPERIORE | TOP CARDAN JOINT COVER | COUVRE-CARDAN SUPERIEUR | OBERE KARDANABDECKUNG | CUBRECARDæN SUPERIOR |
| 5 | G20970032 | RONDELLA 32X4X8,5 | WASHER 32X4X8-5 | RONDELLE 32X4X8-5 | UNTERLEGSCHEIBE 32X4X8-5 | ARANDELA 32X4X8-5 |
| 6 | G66248057 | SPINA DI SICUREZZA SP | SAFETY PIN SP | BROCHE PLASTIC SECURITE CARDAN | SICHERHEITSSTIFT SP | CLAVIJA DE SEGURIDAD SP |
| 7 | G22270452 | ALBERO SCATOLA RINVIO SP/S | INTERMEDIATE BOX SHAFT | ARBRE TRANSMISSION SP/S | WELLE VORGELEGEGEHZUSE SP/S | æRBOL CAJA DE TRANSMISIN SP/SA |
| 8 | G20970051 | RONDELLA 40X0,6X32 | WASHER 40X0-6X32 | RONDELLE 40X0-6X32 | UNTERLEGSCHEIBE 40X0-6X32 | ARANDELA 40X0-6X32 |
| 9 | G20980024 | BOCCOLA 15X8,5X8 | BUSHING 15X8-5X8 | BOITE 15X8-5X8 | BsCHSE 15X8-5X8 | CASQUILLO 15X8-5X8 |
| 10 | G22220071 | AVVISATORE ACUSTICO | HOOTER | SIGNALISATION ACOUSTIQUE | HUPE | INDICADOR ACSTICO A |
| 11 | G22220073 | RONDELLA 28X0,3X16,5 | WASHER 28X0-3X16-5 | RONDELLE 28X0-3X16-5 | UNTERLEGSCHEIBE 28X0-3X16-5 | ARANDELA 28X0-3X16-5 |
| 12 | G22220102 | CONCHIGLIA DX | RIGHT SHELL | COQUILLE DRT. | SCHALE RECHTS | MOLDE DER. |
| 13 | F02050179 | ANELLO E. DE 42X U7435 | | | | |
| 14 | G22220105 | BOCCOLA DI SPINTA | THRUST BUSHING | BOITE DE POUSSEE | SCHUBBsCHSE | CASQUILLO DE APRIETE |
| 15 | G22220155 | ELEM.TENUTA MOLLE COMP. | SPRING SEAL ELEMENT ASSY. | ELEMENT D'ETANCHEITE RESSORTS | DICHTUNGSELEMENT FEDERN KOMP. | ELEM. RESISTENCIA MUELLES COMP |
| 16 | G65338039 | MOLLA COMP.ZN INNESTO SP | ZN COUPLING COMP. SPRING SP | RESSORT COMPL. ZN ACCOUPLEM. | DRUCKFEDER ZN KUPPLUNG SP | MUELLE COMP.ZN ACOPLAMIENTO SP |
| 17 | G16033200 | MONT.SCATOLA RINVIO PE > | TRANSFER CASE | BOITE RENVOI | VORGELEGEGEHZUSE | CAJA DE DISTRIBUCIN |
| 18 | G22270453 | SNODO AVVISATORE SP/S | SIGNALLER ARTICULATION SP/S | ARTICULATION SIGNALISATION SP/ | HUPGELENK SP/S | ARTICULACIN AVISADOR SP/S A |
| 19 | G22270454 | CROCIERA COMPL. SP/S | SPIDER SP/S | CROSILLON COMPL CARDAN TRANSM | GELENKKREUZ KOMPL. SP/S | CRUCETA COMPL. SP/S |
| 20 | G65338018 | MOLLA COMP.ZN SCATOLA RINV.SP | TRANSM. BOX COMP. SPRING . SP | RESSORT COMPL. ZN TRANSMISSION | DRUCKFEDER ZN VORGELEGEGEHZUSE | MUELLE COMP.ZN CAJA TRANSFER.. |
| 21 | G22270389 | 2+2 INGR.SCATOLA DI RINVIO > | 2+2 INTERM. TRANSM. GEAR BOX | COUPLE CON RENV ANGLE (2+2) | 2+2 ZAHNRZDER VORGELEGEGEHZUSE | 2+2 ENGRANAJES CAJA DE LA TRAN |
| 22 | G16620620 | ASSE AVVISATORE SP COMPL. | COMPL. HORN SHAFT SP | AXE AVERTISSEUR SP COMPL. | ACHSE SIGNALHUPE SP KOMPL. | EJE AVISADOR SP COMPL. |
| 23 | G15421830 | INNESTO | COUPLING | ACCOUPLEMENT | KUPPLUNG | ACOPLAMIENTO |
| 24 | G22220103 | CONCHIGLIA SX | LEFT SHELL | COQUILLE GCH. | SCHALE LINKS | MOLDE IZQ. |
| 25 | G66349001 | BOCCOLA | BUSHING | BOITE | B_CHSE | CASQUILLO |
| 26 | F01020041 | VITE M 6X 1X 45 U5737 8.8 ZN | BOLT 6 X45 5737 8.G GALVANIZED | VIS 6 X45 5737 8.G ZN | SCHRAUBE 6 X45 5737 8.G ZN | TORNILLO 6 X45 5737 8.G ZN |
| 27 | F01020403 | VITE M 6X 1X 16 U5739 8.8 ZN | BOLT M 6X16 | VIS M 6X16 | SCHRAUBE M 6X16 | TORNILLO M 6X16 |
| 28 | F01020440 | VITE M 8X1,25X25 U5739 8.8 ZN | BOLT M8 X25 5739 8.8 ZN | VIS M8 X25 5739 8.8 ZN | SCHRAUBE M8 X25 5739 8.8 ZN | TORNILLO M8 X25 5739 8.8 ZN |
| 29 | F01200244 | DADO M 8X1,25 U5588 6.8 ZN | NUT M8 | ECROU M8 | MUTTER M8 | DADO M8 |
| 30 | F01260021 | DADO CIECO M8 U5721 5.8 ZN | CAP NUT M8 5.8 ZN UNI 5721 | ECROU BORGNE M8 5.8 ZN UNI 57 | BLINDE MUTTER M8 5.8 ZN UNI 57 | TUERCA CIEGA M8 5.8 ZN UNI 572 |
| 31 | F01220011 | DADO M 6X 1 D980 8 ZN | SELF LOCKING NUT M6 | ECROU AUTOBL. M6 | SELBSTSPERR.MUTTER M6 | DADO AUTOBL. M6 |
| 32 | F01220022 | DADO M 8X1,25 D980 8 ZN | SELF LOCKING NUT M8X1,25 980V | ECROU AUTOBL. M8X1,25 980-V | SELBSTSP.MUTT. M8X1,25 980-V | DADO AUTOBL. M8X1,25 980-V |
| 33 | F02100114 | SPINA E.P. 6X 30 U6873 C70 BR | ELASTIC PIN 6X30 | GOUJON ELASTIQUE 6X30 | SPANNHUELSE 6X30 | ESPINA ELASTICA 6X30 |
| 34 | F02100121 | SPINA E.P. 6X 40 U6873 C70 BR | ELASTIC PIN 6X40 | GOUJON ELASTIQUE 6X40 | SPANNHUELSE 6X40 | PASADOR 6X40 |
| 35 | F01100011 | ING.M 6X1 7663-A 9SMNPB28 ZN | SPHERE NIPPLE M6X1/A | GRAISSEUR A BILLES M6X1/A | KUGELFETTBsCHSE M6X1/A | ENGRAS. DE ESFERAS M6X1/A |
| 36 | F02050045 | ANELLO E. DE 16X 1 U7435 C70 | SEEGER RING 16X 1 U7435 C70 | BAGUE SEEGER 16 X 1 U7435 C70 | SEEGERING 16 X 1 U7435 C70 | ANILLO 16X 1 U7435 C70 |
| 37 | G16620880 | ASS.CONCHIGLIA DX | | | | |
| 38 | G22505069 | CONCHIGLIA SX | LEFT SHELL | COQUILLE GCH. | SCHALE LINKS | MOLDE IZQ. |
| 39 | G19005681 | BOCCOLA EST.SCATOLA RINVIO | | | | |
| 40 | G19005671 | BOCCOLA INT.SCATOLA RINVIO | | | | |
| 41 | G16621080 | KIT INGR.RINVIO ZAMA | | | | |
| 42 | G22505085 | FERMO ASSE IN LAMIERA | PLATE AXLE STOP | ARRET AXE EN TOLE | FESTSTELLVORRICHTUNG BLECHACHS | BLOQUEO EJE DE CHAPA |
| 43 | G20970141 | RONDELLA 50X37X0,6 | WASHER 50X37X0-6 | RONDELLE 50X37X0-6 | UNTERLEGSCHEIBE 50X37X0-6 | ARANDELA 50X37X0-6 |

# TAV. 211

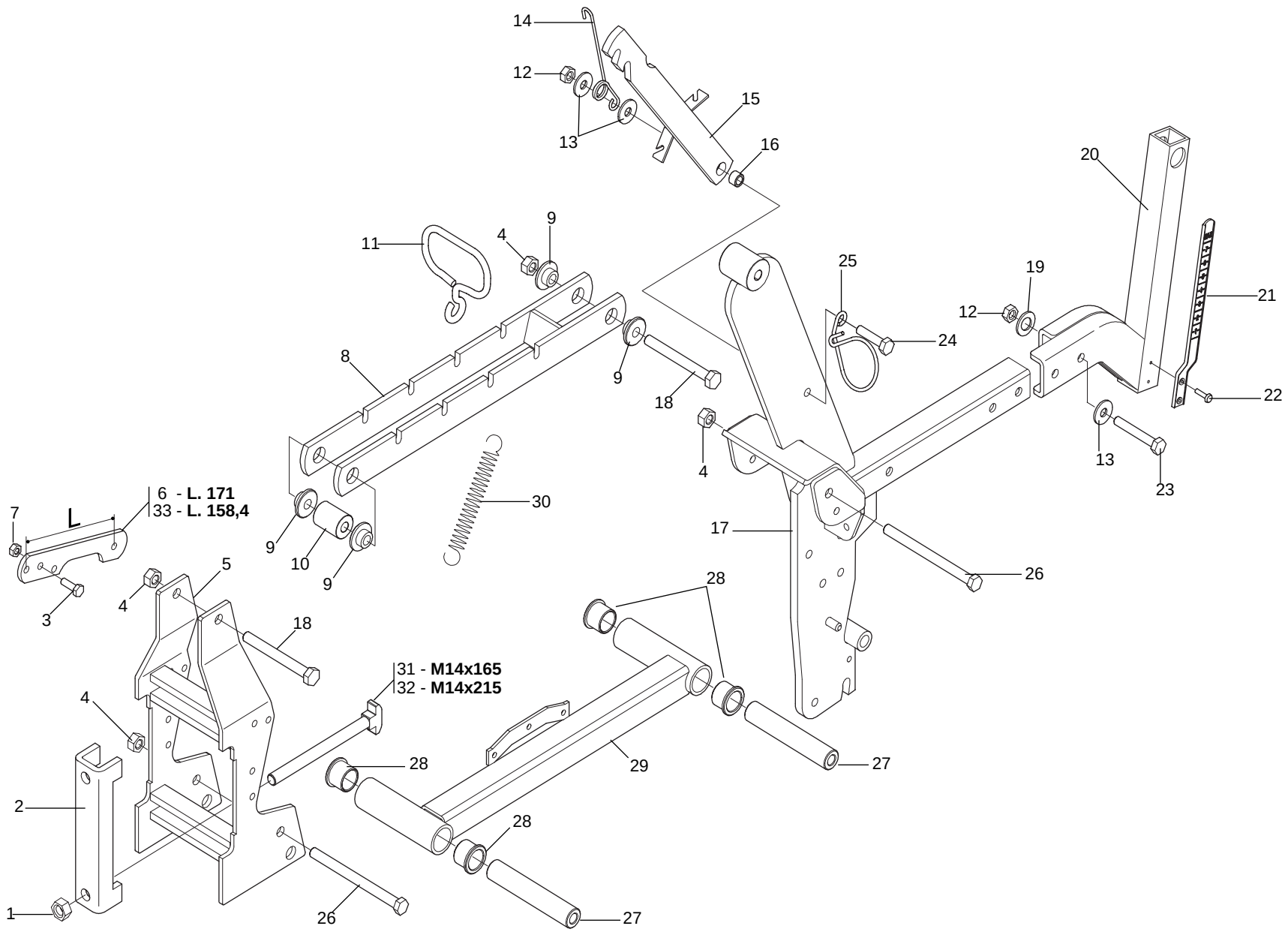




GASPARDO

## *TELAIO ELEMENTO "SP"*

TAV. 211

| Pos. | Cod. | Descrizione | Description | Description | Benennung | Descripcion |
|---|---|---|---|---|---|---|
| 1 | F01200306 | DADO M14X 2 U5588 6.8 ZN | NUT M14X2 | ECROU M14X2 | MUTTER M14X2 | DADO M14X2 |
| 2 | G19204030 | SCONTRO FISS.150 2F D15 | | | | |
| 3 | F01020440 | VITE M 8X1,25X25 U5739 8.8 ZN | BOLT M8 X25 5739 8.8 ZN | VIS M8 X25 5739 8.8 ZN | SCHRAUBE M8 X25 5739 8.8 ZN | TORNILLO M8 X25 5739 8.8 ZN |
| 4 | F01220048 | DADO M12X1,75 D980 8 ZN | SELF LOCKING NUT M12X1,75 980V | ECROU AUTOBL. M12X1,75 980-V | SIEHE 00553312 | DADO AUTOBL. M12X1,75 980-V |
| 5 | G15421111 | PIASTRA ATTACCO 150 | COUPLING PLATE 150 | PLAQUE ATTELAGE 150 | KUPPLUNGSPLATTE 150 | PLACA CONEXIN 150 P |
| 6 | G16620130 | SUPPORTO SCATOLA RINVIO | SUPPORT BOITE DE RENVOI | GEARBOX SUPPORT | HALTERUNG VORGELEGEGEH-USE | SOPORTE CAJA TRANSMISI-N |
| 7 | F01220022 | DADO M 8X1,25 D980 8 ZN | SELF LOCKING NUT M8X1,25 980V | ECROU AUTOBL. M8X1,25 980-V | SELBSTSP.MUTT. M8X1,25 980-V | DADO AUTOBL. M8X1,25 980-V |
| 8 | G15420102 | PARALLELO SUPERIORE | UPPER PARALLEL | PARALL. SUP. | PARALLELOGRAMM OBEN | PARALELO SUPERIOR |
| 9 | G15421232 | BOCCOLA BRACCIO PARALLELO SP.8 | ARM BUSHING PARALLEL SP.8 | BOITE BRAS PARALLELE SP.8 | BsCHSE ARM PARALLEL SP.8 | CASQUILLO BRAZO PARALELO SP.8 |
| 10 | G18802170 | BOCCOLA 12,25X30X40 ZN | BUSHING 12,25X30X40 ZN | BOITE 12,25X30X40 ZN | BsCHSE 12,25X30X40 ZN | CASQUILLO 12,25X30X40 ZN |
| 11 | G18903690 | ATTACCO MOLLA | SPRING COUPLING | FIXATION RESSORT | KUPPLUNG FEDER | CONEXIN MUELLE O |
| 12 | F01200270 | DADO M10X 1,5 U5588 6.8 ZN | NUT M10 | ECROU M10 | MUTTER M10 | DADO M10 |
| 13 | F01420060 | ROS.M10 10,5X 30X2,5 U6593 ZN | WASHER 10,5X30 | RONDELLE 10,5X30 | SCHEIBE 10,5X30 | ARANDELA 10,5X30 |
| 14 | G18902880 | MOLLA FERMO PARALLELO SP | PARALLEL STOP SPRING SP | RESSORT ARRET PARALLELE SP | FEDER FESTSTELLVORRICHT. PARAL | MUELLE BLOQUEO PARALELO SP |
| 15 | G16620160 | FERMO PARALLELO | PARALLEL LOCK | ARRET PARALLELOGRAMME | FESTSTELLVORRICHTUNG PARALLELO | BLOQUEO PARALELO |
| 16 | G18801610 | BOCCOLA 10,25X16 X11 ZN | BUSHING 10.25 X 16 X 11- GALVA | BOITE 10-25X16 X11 ZN | BsCHSE 10-25X16 X11 ZN | CASQUILLO 10-25X16 X11 ZN |
| 17 | G16620310 | CORPO CENTRALE SP540 | CENTRAL CASING SP540 | CORPS CENTRALE SP540 | MITTELKTRPER SP540 | CUERPO CENTRAL SP540 |
| 18 | F01020168 | VITE M12X1,75X90 U5737 8.8 ZN | BOLT 12X90 5737 8.G GALVANIZED | VIS 12X90 5737 8.G ZN | SCHRAUBE 12X90 5737 8.G ZN | TORNILLO 12X90 5737 8.G ZN |
| 19 | F01430023 | ROS.M10 10,5X 18X0,9 U8842J ZN | WASHER D10 DIN 6798 D.INT.ZN | RONDELLE D10 DIN 6798 D. INT. | UNT. SCHEIBE D10 DIN 6798 D.IN | ARANDELA D10 DIN 6798 D.INT.ZN |
| 20 | G16620550 | SUPPORTO REGOLAZIONE | REGULATION SUPPORT | SUPPORT R+GLAGE | HALTERUNG EINSTELLUNG | SOPORTE REGULACIËN |
| 21 | G19003400 | ASTA INDICAZIONE PROFONDITA' | DEPTH INDICATING ROD | TIGE INDICATION PROFONDEUR | TIEFENANZEIGESTAB | VARILLA INDICACIÓN PROFUNDIDAD |
| 22 | F02250077 | RIVETTO STR. 3X 14 U9200A AL | 3X14 ALUMINIUM PULL RIVET | RIVET A RUPTURE 3X14 ALUMINIUM | REISSNIETE3X14 ALL. | REMACHE DESGAR. 3X14 ALL. |
| 23 | F01020122 | VITE 10X 1,5X 70 U5737 8.8 ZN | BOLT 10X 1,5X 70 U5737 8.8 ZB | VIS 10X 1,5X 70 U5737 8.8 ZB | SCHR.10X 1,5X 70 U5737 8.8 ZB | TORN.10X 1,5X 70 U5737 8.8 ZB |
| 24 | F01020112 | VITE M10X 1,5X45 U5737 8.8 ZN | BOLT 10X45 5737 8.G GALVANIZED | VIS 10X45 5737 8.G ZN | SCHRAUBE 10X45 5737 8.G ZN | TORNILLO 10X45 5737 8.G ZN |
| 25 | G18903140 | MOLLA GUIDATUBO | PIPE GUIDE SUPPORT | RESSORT GUIDE-TUBE | FEDER ROHRFsHRUNG | MUELLE GUA TUBOS A |
| 26 | F01020183 | VITE 12X1,75X170 U5737 8.8 ZN | BOLT 12X170 5737 8.G GALVANIZ. | VIS 12X170 5737 8.G ZN | SCHRAUBE 12X170 5737 8.G ZN | TORNILLO 12X170 5737 8.G ZN |
| 27 | G22230057 | MOZZO ANTERIORE | ANT. HUB | MOYEU AVANT | VORDERNABE | CUBO DELANTERO |
| 28 | G66349003 | BOCCOLA SINT. | BUSHING- SINTERED | BOITE FRITTEE | SYNTH. BUECHSE | CASQUILLO SINT. |
| 29 | G15420122 | BRACCIO INFERIORE | LOWER ARM | BRAS INFERIEUR | UNTERER ARM | BRAZO INFERIOR |
| 30 | G65337015 | MOLLA TRAZ.ZN REGOL.ELEM. SP | TRACTION SPRING ZN REGUL. ELEM | RESSORT TRACT. ZN REGL. ELEMEN | ZUGFEDER ZN ELEMENTEINSTELLUNG | MUELLE TRAC. ZN REGUL.ELEM. SP |
| 31 | G16610010 | VITE A MARTELLO M14X165 | WINGED SCREW M14X165 | VIS A TETE MARTEAU M14X165 | ZWEIFLÜGEL- SCHRAUBEN M14X165 | TORNILLO DE MARIPOSA M14X165 |
| 32 | G16610020 | VITE A MARTELLO M14X215 | WINGED SCREW M14X215 | VIS A TETE MARTEAU M14X215 | ZWEIFLÜGEL- SCHRAUBEN M14X215 | TORNILLO DE MARIPOSA M14X215 |
| 33 | G15422091 | SUPPORTO SCATOLA RINVIO | GEARBOX SUPPORT | SUPPORT BOITE DE RENVOI | HALTERUNG VORGELEGEGEH-USE | SOPORTE CAJA TRANSMISIËN |

# TAV. 221

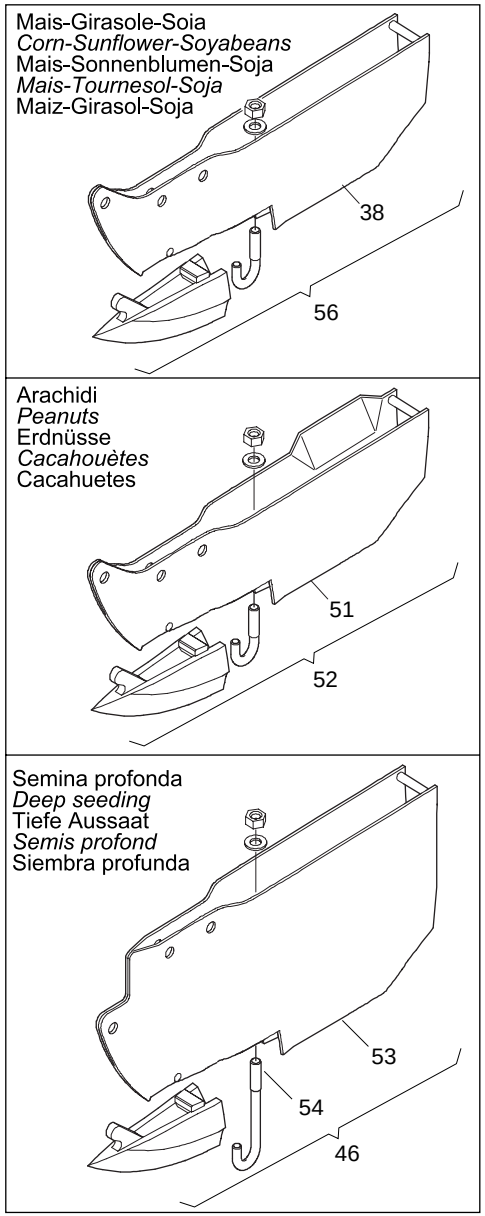


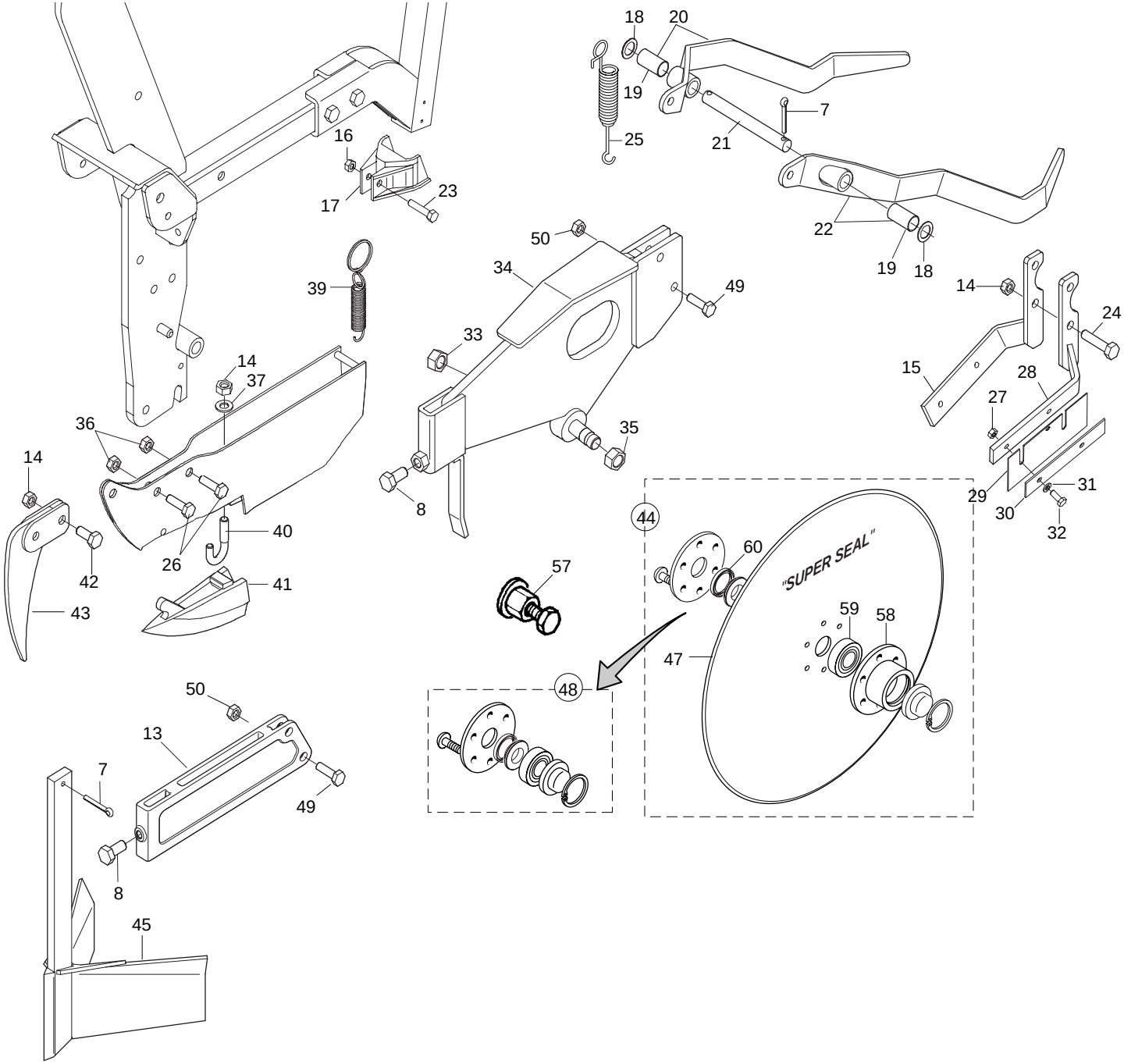




GASPARDO

## *ELEMENTI ASSOLCATORI "SP"*

TAV. 221

| Pos. | Cod. | Descrizione | Description | Description | Benennung | Descripcion |
|---|---|---|---|---|---|---|
| 1 | G65337015 | MOLLA TRAZ.ZN REGOL.ELEM. SP | TRACTION SPRING ZN REGUL. ELEM | RESSORT TRACT. ZN REGL. ELEMEN | ZUGFEDER ZN ELEMENTEINSTELLUNG | MUELLE TRAC. ZN REGUL.ELEM. SP |
| 2 | G18903690 | ATTACCO MOLLA | SPRING COUPLING | FIXATION RESSORT | KUPPLUNG FEDER | CONEXIN MUELLE O |
| 3 | G15422420 | ATTACCO MOLLA SPARTIZOLLE | SOD BREAKER SPRING COUPLING | FIXATION RESSORT ECART. MOTTES | FEDERANSCHLUSS KLOTENRZUMER | CONEXIN MUELLE DIVISOR TERRONO |
| 4 | F01220022 | DADO M 8X1,25 D980 8 ZN | SELF LOCKING NUT M8X1,25 980V | ECROU AUTOBL. M8X1,25 980-V | SELBSTSP.MUTT. M8X1,25 980-V | DADO AUTOBL. M8X1,25 980-V |
| 5 | G15422400 | ASSE SPARTIZOLLE MOBILE | MOBILE SOD BREAKER SPINDLE | AXE ECARTEUR MOTTES MOBILE | ACHSE MOBILER KLOTENRZUMER | EJE DIVISOR DE TERRONES MVIL A |
| 6 | G15422390 | SUPPORTO SPARTIZOLLE MOBILE | MOBILE SOD BREAKER SUPPORT | SUPP. ECARTEUR MOTTES MOBILE | HALTERUNG MOBILER KLOTENRZUMER | SOPORTE DIVISOR DE TERRONES MO |
| 7 | F02200227 | COPIGLIA 5X 30 U1336 ZN | SPLIT PIN 5 X30 1336 GALVAN. | GOUPILLE 5 X30 1336 ZN | SPLINT 5 X30 1336 ZN | PASADOR 5 X30 1336 ZN |
| 8 | F01020510 | VITE M12X1,75X30 U5739 8.8 ZN | BOLT M 12X30 | VIS M 12X30 | SCHRAUBE M 12X30 | TORNILLO M 12X30 |
| 9 | G15422410 | FERMO SPARTIZOLLE MOBILE | MOBILE SOD BREAKER STOP | ARRET ECARTEUR MOTTES MOBILE | FESTSTELLVOR. MOBILER KLOTENRZ | BLOQUEO DIVISOR DE TERRONES MO |
| 10 | G18800560 | BOCCOLA 8,25 X16 X7 | BUSHING 8.25 X 16 X 7 | BOITE 8-25 X16 X7 | BsCHSE 8-25 X16 X7 | CASQUILLO 8-25 X16 X7 |
| 11 | F01420048 | ROS.M8 8,4X 24X 2 U6593 ZN | PLANE WASHER D.8 | RONDELLE D.8 | SCHEIBE D.8 | ARANDELA D.8 |
| 12 | F01020063 | VITE M8X1,25X 35 U5737 8.8 ZN | BOLT 8 X35 5737 8.G GALVANIZED | VIS 8 X35 5737 8.G ZN | SCHRAUBE 8 X35 5737 8.G ZN | TORNILLO 8 X35 5737 8.G ZN |
| 13 | G19203990 | SUPP.SPARTIZOLLE | | | | |
| 14 | F01200270 | DADO M10X 1,5 U5588 6.8 ZN | NUT M10 | ECROU M10 | MUTTER M10 | DADO M10 |
| 15 | G15422211 | SUPP.RASCHIATERRA DISCHI DX | RIGHT SOIL SCRAPER DISC SUPP. | SUPP.RACLE-BOUE DISQUES DRT | HALTER.ERDSCHABER SCHEIBEN REC | SOP.RASCADOR TIERRA DISCOS DER |
| 16 | F01230022 | DADO M 6X 1 D982 8 ZN | NORM.SELF-LOCKING NUT 6 GALVAN | ECROU AUTOB.NOR.6 ZN | SELBSTSP. MUTTER NOR.6 ZN | TUERCA AUTOB. NOR. 6 ZN |
| 17 | G19002701 | PROTEZIONE FOTOCELLULA > | PHOTOCELL PROTECTION | PROTECT CAPT PHOTOC SP4 > | SCHUTZ PHOTOZELLE | PROTECCIN FOTOCLULA PR |
| 18 | G18701820 | RONDELLA 16,5X25X1,0 ZN | WASHER 16.5 X 25 X 1- GALVAN. | RONDELLE 16,5 X25 X1 ZN | UNTERLEGSCHEIBE 16,5 X25 X1 ZN | ARANDELA 16,5 X25 X1 ZN |
| 19 | F04150024 | BOCCOLA PAP 15X17X25 | PAP BUSH 15X17X25 | BOITE PAP 15X17X25 | BsCHSE PAP 15X17X25 | CASQUILLO PAP 15X17X25 |
| 20 | G16620690 | COPRISEME MAIS DX | | | | |
| 21 | G15421080 | ASSE COPRISEME ZN | SEED COVER SPINDLE ZN | AXE COUVRE-GRAINES | SAMENDECKACHSE ZN | EJE CUBRESEMILLA ZN |
| 22 | G16620700 | COPRISEME MAIS SX | | | | |
| 23 | F01020408 | VITE M 6X 1X 30 U5739 8.8 ZN | BOLT M 6X1X30 | VIS M 6X1X30 | SCHRAUBE M 6X1X30 | TORNILLO M 6X1X30 |
| 24 | F01020110 | VITE M10X 1,5X40 U5737 8.8 ZN | BOLT 10X40 5737 8.G GALVANIZED | VIS 10X40 5737 8.G ZN | SCHRAUBE 10X40 5737 8.G ZN | TORNILLO 10X40 5737 8.G ZN |
| 25 | G18903170 | MOLLA TRAZ.ZN RASCHIAT. SP530 | TRACTION SPRING ZN SCRAPER SP5 | RESSORT TRACT. ZN RACLEUR SP53 | ZUGFEDER ZN ABSCHABER SP530 | MUELLE TRAC. ZN RASCADOR SP530 |
| 26 | F01020476 | VITE M10X 1,5X30 U5739 8.8 ZN | BOLT M 10X30 | VIS M 10X30 | SCHRAUBE M 10X30 | TORNILLO M 10X30 |
| 27 | F01200232 | DADO M 6X 1 U5588 6.8 ZN | | | | |
| 28 | G15422221 | SUPP.RASCHIATERRA DISCHI SX | LEFT SOIL SCRAPER DISC SUPP. | SUPP.RACLE-BOUE DISQUES GCH | HALTER.ERDSCHABER SCHEIBEN LIN | SOP.RASCADOR TIERRA DISCOS IZQ |
| 29 | G15422231 | RASCHIATERRA DISCO | | | | |
| 30 | G15423400 | DISTANZIALE | SPACER | ENTRETOISE | DISTANZSTsCK | DISTANZSTsCK |
| 31 | F01420036 | ROS.M6 6,4X 18X 2 U6593 ZN | FLAT WASHER 6-6X 18X2 6593 ZN | ROND. PLATE 6-6X 18X2 6593 ZN | SCHEIBE 6-6X 18X2 6593 ZN | ARAND. PLANA 6-6X 18X2 6593 ZN |
| 32 | F01020403 | VITE M 6X 1X 16 U5739 8.8 ZN | BOLT M 6X16 | VIS M 6X16 | SCHRAUBE M 6X16 | TORNILLO M 6X16 |
| 33 | F01200442 | DADO M16X 1,5 U5589 6.8 ZN | NUT 16X1-5 UNI 5589 6.8 GALVAN | ECROU 16X1-5 UNI 5589 6.8 ZN | MUTTER 16X1-5 UNI 5589 6.8 ZN | TUERCA 16X1-5 UNI 5589 6.8 ZN |
| 34 | G15422361 | SUPPORTO DISCHI | DISKS SUPPORT | SUPPORT DISQUES | SCHEIBENHALTERUNG | SOPORTES DISCOS |
| 35 | G15220540 | DADO M16X1,5 SX | NUT M16X1-5 LEFT | ECROU M16X1-5 GCH | MUTTER M16X1-5 LI | TUERCA M16X1-5 IZQ |
| 36 | F01220033 | DADO M10X 1,5 D980 8 ZN | NUT M10X 1,5 D980 8 ZB | ECRO.M10X 1,5 D980 8 ZB | MUTT.M10X 1,5 D980 8 ZB | TUER.M10X 1,5 D980 8 ZB |
| 37 | F01430023 | ROS.M10 10,5X 18X0,9 U8842J ZN | WASHER D10 DIN 6798 D.INT.ZN | RONDELLE D10 DIN 6798 D. INT. | UNT. SCHEIBE D10 DIN 6798 D.IN | ARANDELA D10 DIN 6798 D.INT.ZN |
| 38 | G15420713 | LAMIERE FALCIONE MAIS SP540 | MAIZE COULTER SHEET SP540 | TÈLES SOC MA¤S SP540 | BLECHE S-SCHAR MAIS SP540 | CHAPAS BOTA MA-Z SP540 |
| 39 | G18902481 | MOLLA TRAZIONE AGG.FALCIONE | COULTER HOOK-UP TRACT. SPRING | RESSORT TRACTION FIX. SOC | ZUGFEDER KUPPL. SÄSCHAR | MUELLE TRACCIÓN CONEX. BOTA |
| 40 | G22270428 | GANCIO TAGLIENTE SP/S | HOOK - CUTTER SP/S | CROCHET HACHOIR SP/S | HAKEN SZSCHAR SP/S | GANCHO GUADA¾ADORA SP/S |
| 41 | G22270397 | TAGLIENTE FALCIONE MAIS SP/S | CORN CUTTER EDGE SP/S | POINTE DE SOC MAIS SP520/540 | SCHARSCHNEIDE MAIS SP/S | FILO DE CORTE. GUADA¾AD. MAIZ |
| 42 | F01020472 | VITE M10X 1,5X25 U5739 8.8 ZN | BOLT 10X25 5739 8.G GALVANIZED | VIS 10X25 5739 8.G ZN | SCHRAUBE 10X25 5739 8.G ZN | TORNILLO 10X25 5739 8.G ZN |
| 43 | G15423390 | PROLUNGA FALCIONE | COULTER EXTENSION | RALLONGE SOC | VERLÄNGERUNG SÄSCHAR | PROLONGACIÓN BOTA |
| 44 | G15225500 | DISCO ASSOLC.PROTETTO COMPL. | COMPL. PROTECTED DISC COULTER | DISQUE DU SOC PROT+G+ COMPLET | GESCH_TZTE FURCHENFORMSCHEIBE | DISCO SURC.PROTEGIDO COMPL. |
| 45 | G15420852 | ASS.SPIANATERRA | GROUND LEVELLER | CHASSE MOTTE SP540 | EINHEIT ERDEBNER | APLANADORA DE TIERRA |
| 46 | G16620231 | FALCIONE SEMINA PROFONDA | DEEP SEEDING COULTER | SOC SEMIS PROFOND | S-SCHAR TIEFE SAAT | BOTA SIEMBRA PROFUNDA |
| 47 | G13825091 | DISCO ASSOLCATORE D.373 | FURROW OPENER DISK D.373 | DISQUE D. 373 6 T.D.6 | SCHEIBE SZSCHARENREISSER D.373 | DISCO SURCADOR D.373 |
| 48 | G15226600 | KIT X DISCO SUPER SEAL | | | | |
| 49 | F01020479 | VITE M10X 1,5X35 U5739 8.8 ZN | BOLT M 10X35 | VIS M 10X35 | SCHRAUBE M 10X35 | TORNILLO M 10X35 |
| 50 | F01200416 | DADO M10X 1,5 U5589 6S ZN | NUT 10 UNI5589 6.8 GALVANIZED | ECROU 10 UNI 5589 6.8 ZN | MUTTER 10 UNI 5589 6.8 ZN | TUERCA 10 UNI 5589 6.8 ZN |
| 51 | G16620240 | SUPPORTO FALCIONE ARACHIDI | SUPPORT PEANUT CUTTER | SUPPORT HACHOIR ARACHIDES | HALTERUNG SZSCHAR ERDN_SSE | SOPORTE GUADA¥ADORA CACAHUETE |
| 52 | G16620260 | FALCIONE ARACHIDI COMPL.SP540 | COMPL. PEANUT COULTER SP540 | HACHOIR ARACHIDES COMPL.SP540 | S-SCHAR ERDN_SSE KOMPL.SP540 | BOTA CACAHUETES COMPL. SP540 |
| 53 | G16620181 | SUPPORTO FALCIONE SEMINA PROF. | CUTTER SUPPORT ASS. DEEP SEEDI | SUPPORT DE SOC SEMIS PROFOND | HALTERUNG SZSCHAR TIEFE AUSSA | CONJ. SOPORTE GUAD. SIEMBRA PR |
| 54 | G16620220 | GANCIO TAGLIENTE SEM.PROFONDA | HOOK - CUTTER DEEP SEEDING | CROCHET HACHOIR SEMIS PROFOND | HAKEN SZSCHAR TIEFE AUSSAAT | GANCHO FILO DE CORTE SIEMBRA P |
| 55 | F01020481 | VITE M10X 1,5X40 U5739 8.8 ZN | BOLT 10X40 5739 8.G GALVANIZED | VIS 10X40 5739 8.G ZN | SCHRAUBE 10X40 5739 8.G ZN | TORNILLO 10X40 5739 8.G ZN |
| 56 | G15420735 | MONT.FALCIONE MAIS SP99 | | | | |
| 57 | G15225240 | ESTRATTORE DISCHI ELEMENTO MT | SEED PLATE EXTRACTOR ELEM. MT | EXTRACTEUR DISQUE ELEMENT MT | SCHEIBENAUSZIEHER ELEMENT MT | EXTRACTOR DISCOS ELEMENTO MT |
| 58 | G15223651 | SUPPORTO CUSCINETTO DISCO | DISK BEARING SUPPORT | SUPPORT PALIER DISQUE | SCHEIBENLAGERBsCHSE | SOPORTE COJINETE DISCO |
| 59 | F04010084 | CUSC.D17D47 B22,2 3303 LLU/DDU | BEARING 3303 2RS | PALIER 3303 2RS | LAGER 3303 2RS | COJINETE 3303 2RS |
| 60 | F03011075 | AN. TENUTA B1OF 24X32X4 | SEALING RING G24X32X4 | BAGUE D'ETANCHEITE G24X32X4 | DICHTRING G24X32X4 | ANILLO AISLADOR G24X32X4 |

# TAV. 231

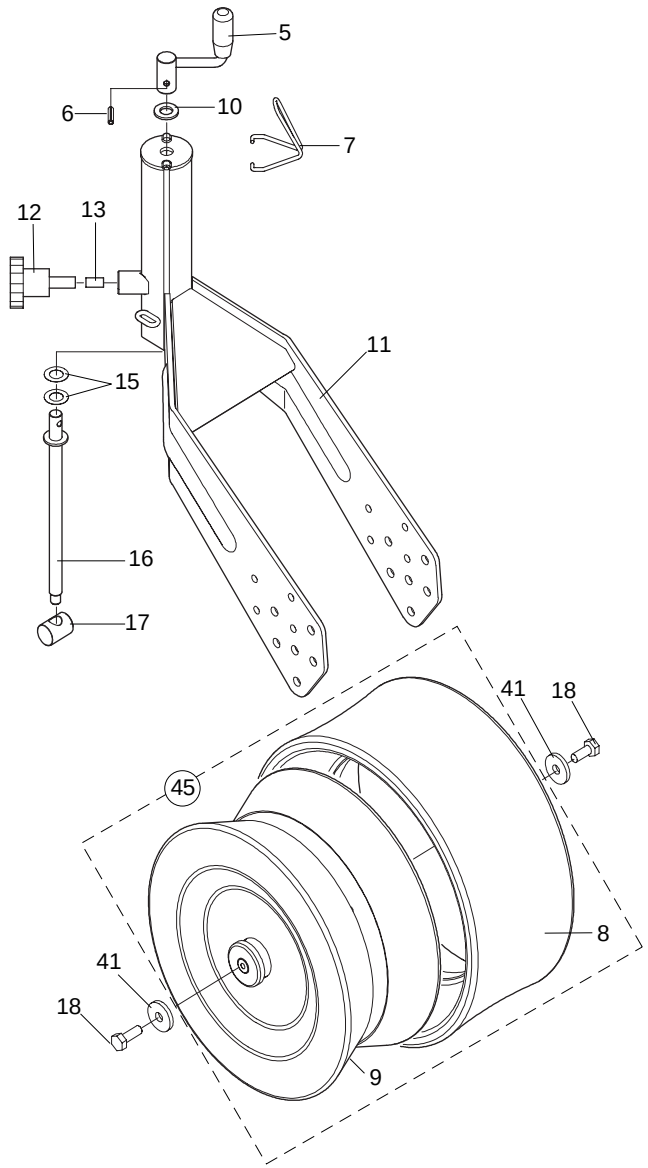


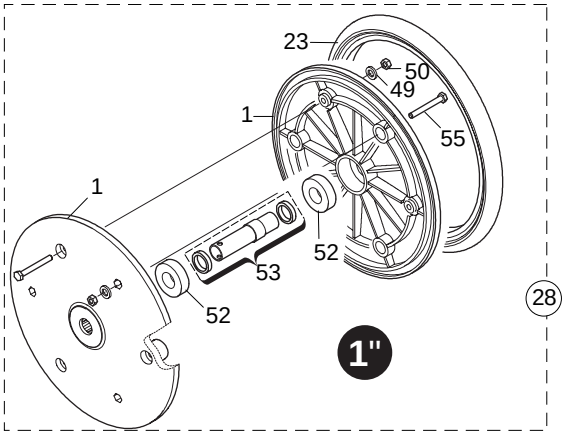


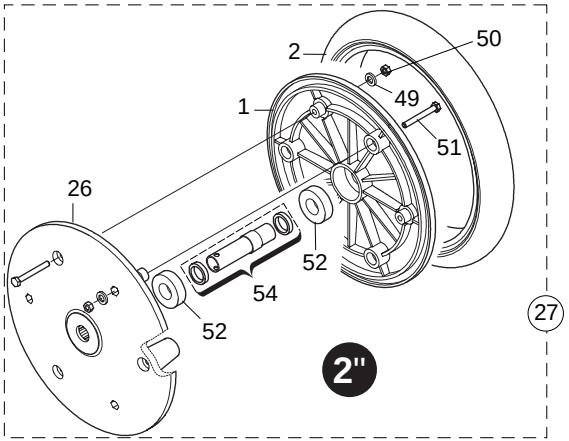


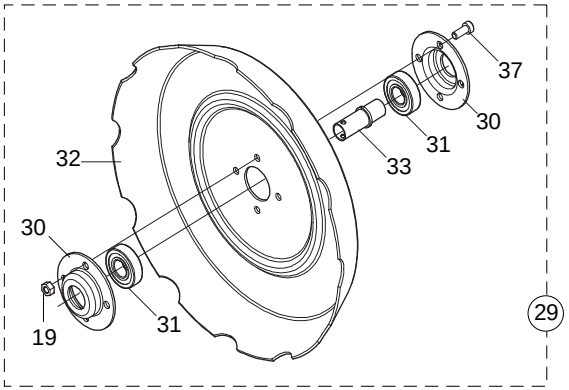


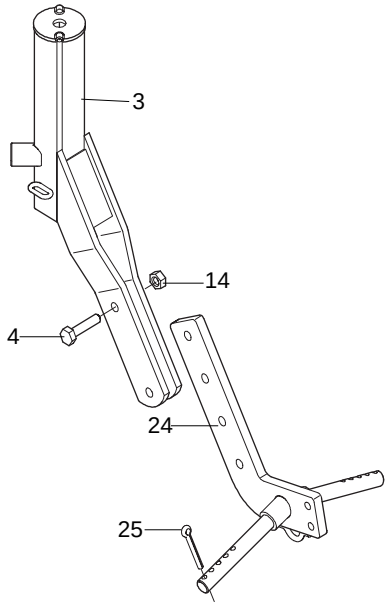


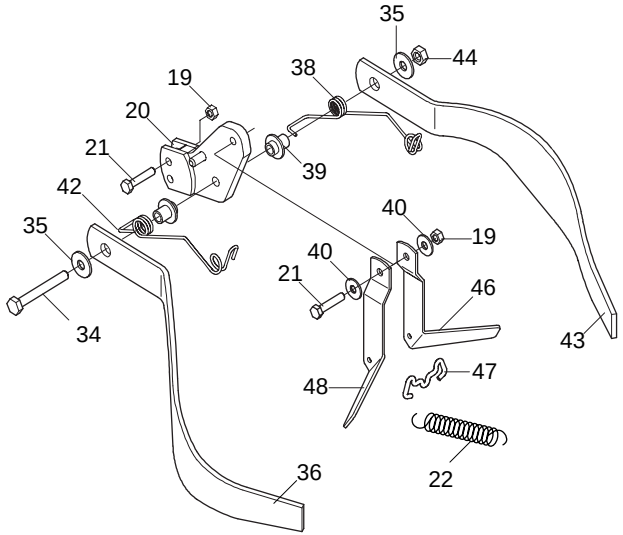




GASPARDO

## *RUOTE DI COMPRESSIONE "SP"*

TAV. 231

| Pos. | Cod. | Descrizione | Description | Description | Benennung | Descripcion |
|---|---|---|---|---|---|---|
| 1 | F06120146 | SEMICERCHIO PLA RUOTA 1" | PLASTIC HALF RIM 1' WHEEL | DEMI-JANTE PLAST. ROUE 1" | HALBFELGE PLA RAD 1" | SEMIARO PL-ST.RUEDA 1" |
| 2 | F06120165 | COPERTURA 2' X 13' | RUBBER RING 2X13' | COUVERT FARMF ROUE COMPR 2"X13 | MANTEL 2' X 13' | CUBIERTA 2' X 13' |
| 3 | G15420913 | SUPPORTO RUOTE A V | V-WHEEL SUPPORT | SUPPORT ROUES EN V | V RADER HALTERUNG | SOPORTE RUEDAS A V |
| 4 | F01020481 | VITE M10X 1,5X40 U5739 8.8 ZN | BOLT 10X40 5739 8.G GALVANIZED | VIS 10X40 5739 8.G ZN | SCHRAUBE 10X40 5739 8.G ZN | TORNILLO 10X40 5739 8.G ZN |
| 5 | G22270235 | MANIGLIA REGOLAZIONE B4 | ADJUSTMENT HANDLE B4 | POIGNEE REGLAGE B4 | EINSTELLGRIFF B4 | MANIJA REGULACIN B4 M |
| 6 | F02100109 | SPINA E.P. 6X 24 U6873 C70 BR | PIN EL. .6 X24 DIN 1481 | FICHE EL. 6 X24 DIN 1481 | SPANNSTIFT 6 X24 DIN 1481 | CLAVIJA EL.6 X24 DIN 1481 |
| 7 | G65336100 | MOLLA SPEC.FERMO MANIGLIA SP | SPEC SPRING HANDLE STOP SP | RESSORT SPEC. ARRET POIGNEE SP | SPEZIALFEDER GRIFFSPERRE SP | MUELLE ESPEC. BLOQUEO MANIJA S |
| 8 | F06120155 | COPERTURA FARMF.370X165 'A' | COVERING FARMF.370X165 'A' | COUVERTURE FARMF. 370X165 'A' | MANTEL FARMF.370X165 'A' | CUBIERTA FARMF.370X165 'A' |
| 9 | F06120022 | CERCHIO FARMF.370X165 COMPL. | FARMFLEX RING 370X165 ASSY. | JANTE FARMF. 370X165 COMPL. | REIFEN FARMF.370X165 KOMPL. | LLANTA FARMF.370X165 COMPL. |
| 10 | F01410088 | ROS.M14 15X 28X2,5 U6592 ZN | WAS.M14 15X 28X2,5 U6592 ZB | RON.M14 15X 28X2,5 U6592 ZB | SCH.M14 15X 28X2,5 U6592 ZB | ARA.M14 15X 28X2,5 U6592 ZB |
| 11 | G16620430 | SUPPORTO RUOTE | | | | |
| 12 | F06220013 | VOLANT.8L.PERN.M12X30-40 VPA55 | 8-LOBE PIN HANDWHEEL M12X30-40 | VOLANT 8 LOBES PIVOT M12X30-40 | HANDRAD.8L.ZAPFENM12X30-40 VPA | VOLDEL.8L.PERN.M12X30-40 VPA55 |
| 13 | G14820991 | FERMO REGOLAZIONE | ADJUSTMENT STOP | BUTEE REGLAGE | EINSTELLUNGSSPERRE | BLOQUEO REGULACIËN |
| 14 | F01200270 | DADO M10X 1,5 U5588 6.8 ZN | NUT M10 | ECROU M10 | MUTTER M10 | DADO M10 |
| 15 | G22220073 | RONDELLA 28X0,3X16,5 | WASHER 28X0-3X16-5 | RONDELLE 28X0-3X16-5 | UNTERLEGSCHEIBE 28X0-3X16-5 | ARANDELA 28X0-3X16-5 |
| 16 | G22230062 | VITE DI REGOLAZIONE | ADJUSTMENT BOLT | VIS DE REGLAGE | EINSTELLSCHRAUBE | TORNILLO DE REGULACIN S |
| 17 | G22230063 | ELEMENTO ARTICOLATO | ARTICULATED ELEMENT | ELEMENT ARTICULE | GELENKELEMENT | ELEMENTO ARTICULADO |
| 18 | F01020476 | VITE M10X 1,5X30 U5739 8.8 ZN | BOLT M 10X30 | VIS M 10X30 | SCHRAUBE M 10X30 | TORNILLO M 10X30 |
| 19 | F01220022 | DADO M 8X1,25 D980 8 ZN | SELF LOCKING NUT M8X1,25 980V | ECROU AUTOBL. M8X1,25 980-V | SELBSTSP.MUTT. M8X1,25 980-V | DADO AUTOBL. M8X1,25 980-V |
| 20 | G15423460 | ATTACCO COPRISEME RASCHIATERRA | SOIL SCRAPER SEED COV.LINKAGE | FIXATION COUVRE-GRAINES RACLEU | KUPPLUNG SAMENABDEC.ERDSCHABER | CONEXIÓN CUBRESEM.RASCADOR TI. |
| 21 | F01020449 | VITE M 8X1,25X35 U5739 8.8 ZN | BOLT M 8X35 | VIS M 8X35 | SCHRAUBE M 8X35 | TORNILLO M 8X35 |
| 22 | G65337028 | MOLLA TRAZ.ZN SUPP.RUOTA SV | TRACTION SPRING ZN WHEEL SUPP. | RESSORT TRACT. ZN SUPPORT ROUE | ZUGFEDER ZN RADHALTERUNG SV | MUELLE TRAC. ZN SOPORTE RUEDA |
| 23 | F06120181 | ANELLO IN GOMMA 1 POLLICE MT | RUBBER RING 1X12' | COUVERT FARMF ROUE COMPR 1"X12 | MANTEL FARMF.R.DRUCK .MT | CUBIERTA FARMF. R. COMPR. MT |
| 24 | G15423840 | REGOLAZIONE RUOTE | WHEEL ADJUSTMENT | REGLAGE ROUES | RADEINSTELLUNG | REGULACIÓN RUEDAS |
| 25 | F02200227 | COPIGLIA 5X 30 U1336 ZN | SPLIT PIN 5 X30 1336 GALVAN. | GOUPILLE 5 X30 1336 ZN | SPLINT 5 X30 1336 ZN | PASADOR 5 X30 1336 ZN |
| 26 | F06120147 | SEMICERCHIO PLA RUOTA 2" | PLASTIC HALF RIM 2' WHEEL | DEMI-JANTE PLAST. ROUE 2" | HALBFELGE PLA RAD 2" | SEMIARO PL-ST.RUEDA 2" |
| 27 | F06120075 | RUOTA DA 2 POLLICI MT | RUBBER WHEEL 2'X13' PLA.2 BEAR | ROUE CAOUTCHOUTEE | GUMMIRAD | RUEDA DE CAUCHO |
| 28 | F06120076 | RUOTA DA 1 POLLICE MT | RUBBER WHEEL 1'X12' PLA.2 BEAR | ROUE CAOUTCHOUTEE | GUMMIRAD | RUEDA DE CAUCHO |
| 29 | G15423860 | RUOTA POSTERIORE COMPL. | REAR WHEEL ASSY | ROUE POSTERIEURE COMPL. | HINTERES RAD KOMPLETT | RUEDA TRASERA COMPL. |
| 30 | G16242190 | SUPPORTO CUSCINETTO | BEARING SUPPORT | SUPPORT PALIER | LAGERBsCHSE | SOPORTE COJINETE |
| 31 | F04010165 | CUSC.D20 D47 B14 6204,2RSC3 | BEARING 6204 2RS | PALIER 6204 2RS | LAGER 6204 2RS | COJINETE 6204 2RS |
| 32 | G14820871 | RUOTA POSTERIORE FERRO | REAR IRON WHEEL | ROUE ARRIERE FER | EISENHINTERRAD | RUEDA TRAS. HIERRO |
| 33 | G15423850 | BOCCOLA RUOTA FERRO | STEEL WHEEL BUSH | DOUILLE ROUE FER | BÜCHSE EISENRAD | BUJE RUEDA DE HIERRO |
| 34 | F01020128 | VITE M10X 1,5X80 U5737 8.8 ZN | | | | |
| 35 | F01420060 | ROS.M10 10,5X 30X2,5 U6593 ZN | WASHER 10,5X30 | RONDELLE 10,5X30 | SCHEIBE 10,5X30 | ARANDELA 10,5X30 |
| 36 | G10120621 | COPRISEME SX | LEFT SEED COVER | COUVRE-GRAINES GHT. | LINKER SAMENABDECKER | CUBRESEMILLA IZQ. |
| 37 | F01040091 | VITE M 8X1,25X20 U5931 8.8 ZN | SCREW 8 X20 5931 8.G ZN | VIS 8 X20 5931 8.G ZN | SCHRAUBE 8 X20 5931 8.G ZN | TORNILLO 8 X20 5931 8.G ZN |
| 38 | G18902910 | MOLLA COPRISEME DX SP | RIGHT SEED COVER SPRING SP | RESSORT COUVRE-GRAINE DRT SP | FEDER SAMENABDECKER RE SP | MUELLE CUBRESEMILLAS DER SP |
| 39 | G15422500 | BOCCOLA SUPP.MOLLA COPRISEMI | SEED COVER SPRING SUPPORT BUSH | BOITE SUPP. RESSORT COUVRE-GR. | BsCHSE HALTERUNG FEDERSAMENABD | CASQUILLO SUPER.MUELLE CUBRESE |
| 40 | F01420048 | ROS.M8 8,4X 24X 2 U6593 ZN | PLANE WASHER D.8 | RONDELLE D.8 | SCHEIBE D.8 | ARANDELA D.8 |
| 41 | G18701140 | RONDELLA 11 X35 X5 | WASHER 11 X 35 X 5 | RONDELLE 11 X35 X5 | UNTERLEGSCHEIBE 11 X35 X5 | ARANDELA 11 X35 X5 |
| 42 | G18902920 | MOLLA COPRISEME SX SP | LEFT SEED COVER SPRING SP | RESSORT COUVRE-GRAINE GCH SP | FEDER SAMENABDECKER LI SP | MUELLE CUBRESEMILLAS IZQ SP |
| 43 | G10120611 | COPRISEME DX | RIGHT SEED COVER | COUVRE-GRAINES DRT. | RECHTER SAMENABDECKER | CUBRESEMILLA DER. |
| 44 | F01220033 | DADO M10X 1,5 D980 8 ZN | NUT M10X 1,5 D980 8 ZB | ECRO.M10X 1,5 D980 8 ZB | MUTT.M10X 1,5 D980 8 ZB | TUER.M10X 1,5 D980 8 ZB |
| 45 | G14821590 | RUOTA FARMFLEX 370X165 PROF.A | FARMFLEX WHEEL 370X165 DEPTH.A | ROUE FARMFLEX 370X165 PROF.A | RAD FARMFLEX 370X165PROF.A | RUEDA FARMFLEX |
| 46 | G15422481 | RASCHIATERRA DX RUOTE A V | RIGHT 'V' WHEEL SOIL SCRAPER | RACLEUR DRT ROUES EN 'V' | ERDSCHABER RE 'V'-FTRMIGE RZDE | RASCADOR TIERRA DER RUEDAS EN |
| 47 | G18902930 | AGGANCIO RASCHIATERRA | SOIL SCRAPER HOOK | ATTELAGE RACLEUR | KUPPLUNG ERDSCHABER | ENGANCHE RASCADOR TIERRA |
| 48 | G15422491 | RASCHIATERRA SX RUOTE A V | LEFT 'V' WHEEL SOIL SCRAPER | RACLEUR GCH ROUES EN 'V' | ERDSCHABER LI 'V'-FTRMIGE RZDE | RASCADOR TIERRA IZQ RUEDAS EN |
| 49 | F01410037 | ROS.M6 6,4X12,5X1,6 U6592 ZN | PLANE WASHER D.6 | RONDELLE D.6 | SCHEIBE D.6 | ARANDELA D.6 |
| 50 | F01230022 | DADO M 6X 1 D982 8 ZN | NORM.SELF-LOCKING NUT 6 GALVAN | ECROU AUTOB.NOR.6 ZN | SELBSTSP. MUTTER NOR.6 ZN | TUERCA AUTOB. NOR. 6 ZN |
| 51 | F01020042 | VITE M 6X 1X 50 U5737 8.8 ZN | BOL.M 6X 1X 50 U5737 8.8 ZG | VIS 6 X50 5737 8.G ZN | SCHRAUBE 6 X50 5737 8.G ZN | TORNILLO 6x50 5737 8.G ZN |
| 52 | F04010131 | CUSC.D20 D42 B12 6004-2RSH EX> | BEARING 6004 2RS EX. SKF | ROULEMENT 6004 | LAGER 6004 | COJINETE 6004 |
| 53 | G15226610 | KIT DIST./GUARNIZIONI RUOTA V1 | | | | |
| 54 | G15226620 | KIT DIST./GUARNIZIONI RUOTA V2 | | | | |
| 55 | F01020406 | VITE M 6X 1X 25 U5739 8.8 ZN | BOLT M 6X25 | VIS M 6X25 | SCHRAUBE M 6X25 | TORNILLO M 6X25 |

# TAV. 241

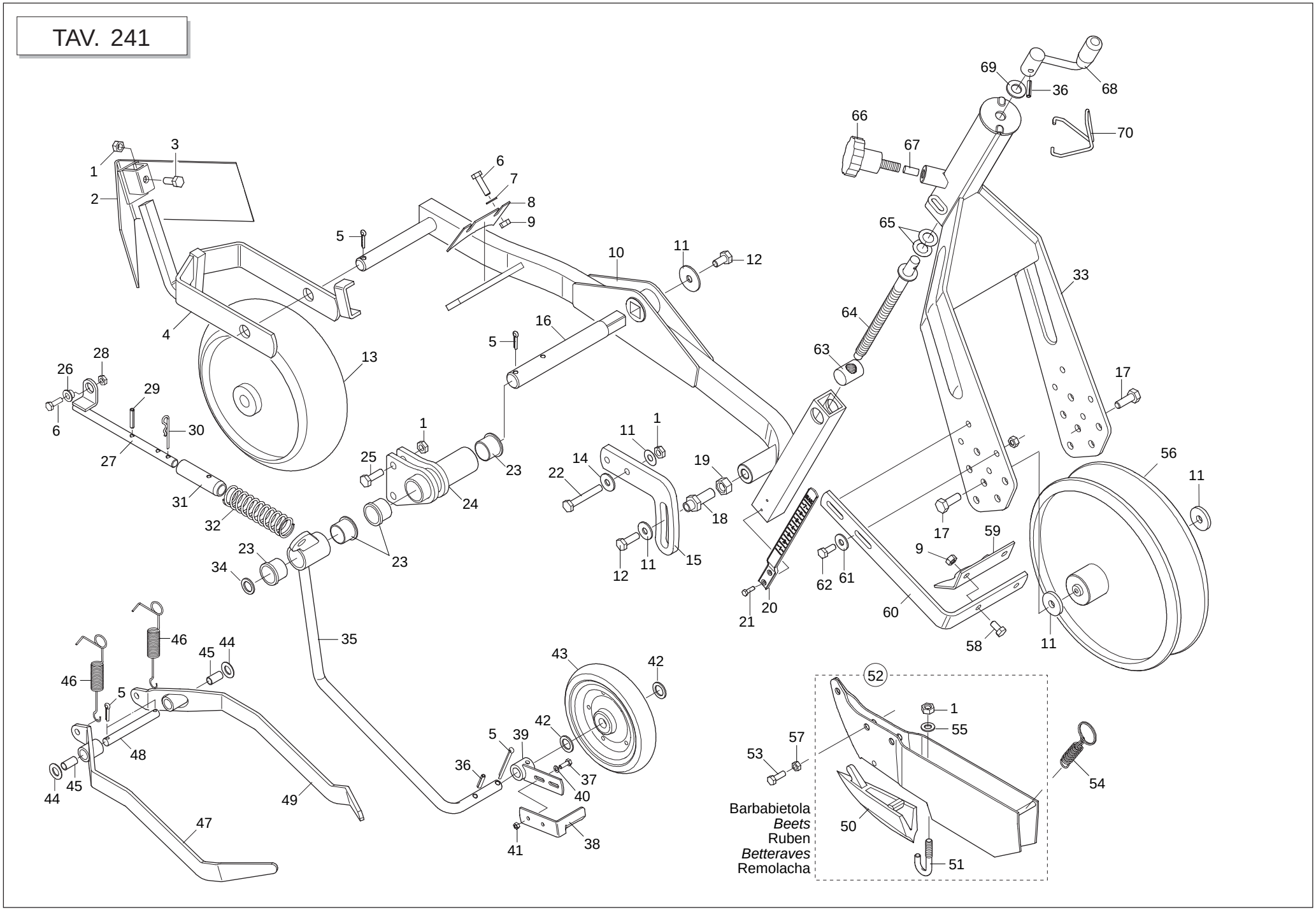




GASPARDO

## *BILANCIERE "SP"*

TAV. 241

| Pos. | Cod. | Descrizione | Description | Description | Benennung | Descripcion |
|---|---|---|---|---|---|---|
| 1 | F01200270 | DADO M10X 1,5 U5588 6.8 ZN | NUT M10 | ECROU M10 | MUTTER M10 | DADO M10 |
| 2 | G22270241 | SPARTIZOLLE BILANCIERE B4 | SOD-BREAKER ROCKERS B4 | ECARTEUR DE MOTTES BALANCIER B | KIPPHEBEL KLOTENRZUMER B4 | DIVISOR DE TERRONES BALANCN BS |
| 3 | F01020472 | VITE M10X 1,5X25 U5739 8.8 ZN | BOLT 10X25 5739 8.G GALVANIZED | VIS 10X25 5739 8.G ZN | SCHRAUBE 10X25 5739 8.G ZN | TORNILLO 10X25 5739 8.G ZN |
| 4 | G15422672 | SUPPORTO RUOTA COMPRESSIONE | COMPRESS. WHEEL SUPPORT | SUPPORT ROUE DE COMPRESSION | HALTERUNG KOMPRESSIONSRAD | SOPORTE RUEDA DE COMPRESION |
| 5 | F02200246 | COPIGLIA 6X 45 U1336 ZN | SPLIT PIN 6 X45 1336 GALVAN. | GOUPILLE 6 X45 1336 ZN | SPLINT 6 X45 1336 ZN | PASADOR 6 X45 1336 ZN |
| 6 | F01020440 | VITE M 8X1,25X25 U5739 8.8 ZN | BOLT M8 X25 5739 8.8 ZN | VIS M8 X25 5739 8.8 ZN | SCHRAUBE M8 X25 5739 8.8 ZN | TORNILLO M8 X25 5739 8.8 ZN |
| 7 | F01410051 | ROS.M8 8,4X 17X1,6 U6592 ZN | PLANE WASHER D.8 | RONDELLE D.8 | SCHEIBE D.8 | ARANDELA D.8 |
| 8 | G15420510 | RASCHIATERRA BILANCIERE | SOIL SCRAPER ROCKER | RACLEUR BALANCIER | ERDSCHABER KIPPHEBEL | RASCADOR TIERRA BALANCN R |
| 9 | F01200244 | DADO M 8X1,25 U5588 6.8 ZN | NUT M8 | ECROU M8 | MUTTER M8 | DADO M8 |
| 10 | G16620440 | BILANCIERE | ROCKER | BALANCIER | KIPPHEBEL | KIPPHEBEL |
| 11 | G18701140 | RONDELLA 11 X35 X5 | WASHER 11 X 35 X 5 | RONDELLE 11 X35 X5 | UNTERLEGSCHEIBE 11 X35 X5 | ARANDELA 11 X35 X5 |
| 12 | F01020470 | VITE M10X 1,5X20 U5739 8.8 ZN | BOLT M 10X20 | VIS M 10X20 | SCHRAUBE M 10X20 | TORNILLO M 10X20 |
| 13 | G15420490 | RUOTINO ANT.BILANC.D.280 | FRONT ROCKER WHEEL D.280 | ROUET ANT. BALANC. D 260 | KLEINES VORD. RAD KIPPHEBEL D. | RUEDECILLA DEL. BALANCN D.280R |
| 14 | F01420060 | ROS.M10 10,5X 30X2,5 U6593 ZN | WASHER 10,5X30 | RONDELLE 10,5X30 | SCHEIBE 10,5X30 | ARANDELA 10,5X30 |
| 15 | G15423251 | PIASTRA DI REGOLAZIONE | ADJUSTING PLATE | PLAQUE DE REGLAGE | EINSTELLPLATTE | PLACA DE REGULACIÓN |
| 16 | G15422572 | ASSE BILANCIERE | ROCKER SPINDLE | AXE BALANCIER | KIPPHEBELACHSE | EJE BALANC |
| 17 | F01020476 | VITE M10X 1,5X30 U5739 8.8 ZN | BOLT M 10X30 | VIS M 10X30 | SCHRAUBE M 10X30 | TORNILLO M 10X30 |
| 18 | G15423521 | VITE REGOLAZIONE ZN | ADJUSTING SCREW - GALVANIZED | VIS RÉGLAGE ZN | STELLSCHRAUBE ZN | TORNILLO REGULACIÓN ZN |
| 19 | F01200432 | DADO M14X 1,5 U5589 6S ZN | NUT M14X1.5 | ECROU M14X1.5 | MUTTER M14X1.5 | DADO M14X1.5 |
| 20 | G19003400 | ASTA INDICAZIONE PROFONDITA' | DEPTH INDICATING ROD | TIGE INDICATION PROFONDEUR | TIEFENANZEIGESTAB | VARILLA INDICACIÓN PROFUNDIDAD |
| 21 | F02250077 | RIVETTO STR. 3X 14 U9200A AL | 3X14 ALUMINIUM PULL RIVET | RIVET A RUPTURE 3X14 ALUMINIUM | REISSNIETE3X14 ALL. | REMACHE DESGAR. 3X14 ALL. |
| 22 | F01020122 | VITE 10X 1,5X 70 U5737 8.8 ZN | BOLT 10X 1,5X 70 U5737 8.8 ZB | VIS 10X 1,5X 70 U5737 8.8 ZB | SCHR.10X 1,5X 70 U5737 8.8 ZB | TORN.10X 1,5X 70 U5737 8.8 ZB |
| 23 | G66349003 | BOCCOLA SINT. | BUSHING- SINTERED | BOITE FRITTEE | SYNTH. BUECHSE | CASQUILLO SINT. |
| 24 | G15423680 | SUPPORTO BILANCIERE SP540 | ROCKERS SUPPORT SP540 | SUPPORT BALANCIER SP540 | EINHEIT KIPPHEBEL SP540 | SOP. BALANC N SP540 |
| 25 | F01020110 | VITE M10X 1,5X40 U5737 8.8 ZN | BOLT 10X40 5737 8.G GALVANIZED | VIS 10X40 5737 8.G ZN | SCHRAUBE 10X40 5737 8.G ZN | TORNILLO 10X40 5737 8.G ZN |
| 26 | G22250398 | BOCCOLA BRACCIO SUPERIORE SV/2 | UPPER ARM BUSHING SV/2 | BOITE BRAS SUP. SV/2 | BsCHSE OBERARM SV/2 | CASQUILLO BRAZO SUPERIOR SV/2 |
| 27 | G15423810 | SUPPORTO MOLLA | SPRING SUPPORT | SUPPORT RESSORT | FEDERHALTERUNG | SOPORTE MUELLE |
| 28 | F01220022 | DADO M 8X1,25 D980 8 ZN | SELF LOCKING NUT M8X1,25 980V | ECROU AUTOBL. M8X1,25 980-V | SELBSTSP.MUTT. M8X1,25 980-V | DADO AUTOBL. M8X1,25 980-V |
| 29 | F02100087 | SPINA E.P. 5X 30 U6873 C70 BR | PIN EL. 5 X30 DIN 1481 | FICHE EL. 5 X30 DIN 1481 | SPANNSTIFT 5 X30 DIN 1481 | CLAVIJA EL.5 X30 DIN 1481 |
| 30 | F02200363 | COPIGLIA R 3X 62 ZN | SPLIT PIN R 3X62 | GOUPILLE R 3X62 | SPLINT R 3X62 | CHAVETA R 3X62 |
| 31 | G15423820 | BOCCOLA NYLON SUPPORTO MOLLA | SPRING-SUPPORTING NYLON BUSH | DOUILLE NYLON SUPPORT RESSORT | NYLONBÜCHSE FEDERHALTERUNG | BUJE NYLON SOPORTE MUELLE |
| 32 | G18903670 | MOLLA COMPRESSIONE RUOTINO | COMPR. WHEEL SPRING | RESSORT COMPRESSION ROUET | FEDER DsNGUNG ROLLE | MUELLE COMPRESIN RUEDECILLA A |
| 33 | G16620430 | SUPPORTO RUOTE | | | | |
| 34 | G18701590 | RONDELLA 25X35X2,5 ZN | WASHER 25 x 35 x2,5 ZB | RONDELLE 25 x 35 x2,5 ZB | UNTERLEGSCHEIBE 25 x 35 x2,5 | ARANDELA 25 x 35 x2,5 ZB |
| 35 | G15423780 | SUPPORTO RUOTINO | WHEEL SUPPORT | SUPPORT ROUET | HALTERUNG ROLLE | SOPORTE RUEDECILLA |
| 36 | F02100109 | SPINA E.P. 6X 24 U6873 C70 BR | PIN EL. .6 X24 DIN 1481 | FICHE EL. 6 X24 DIN 1481 | SPANNSTIFT 6 X24 DIN 1481 | CLAVIJA EL.6 X24 DIN 1481 |
| 37 | F01020378 | VITE M5X 0,8X 16 U5739 8.8 ZN | BOLT 5X16 5739 8.G GALVANIZED | VIS 5X16 5739 8.G ZN | SCHRAUBE 5X16 5739 8.G ZN | TORNILLO 5X16 5739 8.G ZN |
| 38 | G15423271 | RASCHIATERRA | SOIL SCRAPER | RACLEUR | ERDSCHABER | RASCADOR TIERRA |
| 39 | G15421671 | SUPPORTO RASCHIATERRA | SOIL SCRAPER SUPPORT | SUPPORT RACLEUR | HALTERUNG ERDSCHABER | SOPORTE RASCADOR TIERRA |
| 40 | F01420022 | ROS.M5 5,5X 10X 1 U6593 ZG | WASHER M5 5,5X10X1 U6593 ZG | RONDELLE M5 5,5X10X1 U6593 ZG | SCHEIBE M5 5,5X10X1 U6593 ZG | ARANDELA M5 5,5X10X1 U6593 ZG |
| 41 | F01200220 | DADO M 5X 0,8 U5588 6.8 ZN | NUT 5 UNI 5588 6.8 GALVANIZED | ECROU 5 UNI 5588 6.8 ZN | MUTTER 5 UNI 5588 6.8 ZN | TUERCA 5 UNI 5588 6.8 ZN |
| 42 | G20970025 | RONDELLA 25,2X2X16,5 | WASHER 25-2X2X16-5 | RONDELLE 25-2X2X16-5 | UNTERLEGSCHEIBE 25-2X2X16-5 | ARANDELA 25-2X2X16-5 |
| 43 | F06120066 | RUOTINO FLEX 170 X 30 | FLEX WHEEL 170 X 30 | ROUET FLEX 170 X 30 | ROLLE FLEX 170 X 30 | RUEDECILLA FLEX 170 X 30 |
| 44 | G18701820 | RONDELLA 16,5X25X1,0 ZN | WASHER 16.5 X 25 X 1- GALVAN. | RONDELLE 16,5 X25 X1 ZN | UNTERLEGSCHEIBE 16,5 X25 X1 ZN | ARANDELA 16,5 X25 X1 ZN |
| 45 | F04150024 | BOCCOLA PAP 15X17X25 | PAP BUSH 15X17X25 | BOITE PAP 15X17X25 | BsCHSE PAP 15X17X25 | CASQUILLO PAP 15X17X25 |
| 46 | G18903170 | MOLLA TRAZ.ZN RASCHIAT. SP530 | TRACTION SPRING ZN SCRAPER SP5 | RESSORT TRACT. ZN RACLEUR SP53 | ZUGFEDER ZN ABSCHABER SP530 | MUELLE TRAC. ZN RASCADOR SP530 |
| 47 | G16620720 | COPRISEME BIETOLE SX | | | | |
| 48 | G15421080 | ASSE COPRISEME ZN | SEED COVER SPINDLE ZN | AXE COUVRE-GRAINES | SAMENDECKACHSE ZN | EJE CUBRESEMILLA ZN |
| 49 | G16620710 | COPRISEME BIETOLE DX | | | | |
| 50 | G22270226 | TAGLIENTE FALCIONE B4 SP/S | KNIFE COULTER SUGAR BEET SP | POINTE DE SOC BETT SP520/540 | SCHARSPITZE RUBE SP | PONTA SURCADOR REMOLACHA SP |
| 51 | G22270428 | GANCIO TAGLIENTE SP/S | HOOK - CUTTER SP/S | CROCHET HACHOIR SP/S | HAKEN SZSCHAR SP/S | GANCHO GUADA¾ADORA SP/S |
| 52 | G15422474 | MONT.FALCIONE BIETOLE H118 | | | | |
| 53 | F01020479 | VITE M10X 1,5X35 U5739 8.8 ZN | BOLT M 10X35 | VIS M 10X35 | SCHRAUBE M 10X35 | TORNILLO M 10X35 |
| 54 | G18902481 | MOLLA TRAZIONE AGG.FALCIONE | COULTER HOOK-UP TRACT. SPRING | RESSORT TRACTION FIX. SOC | ZUGFEDER KUPPL. SÄSCHAR | MUELLE TRACCIÓN CONEX. BOTA |

# TAV. 241

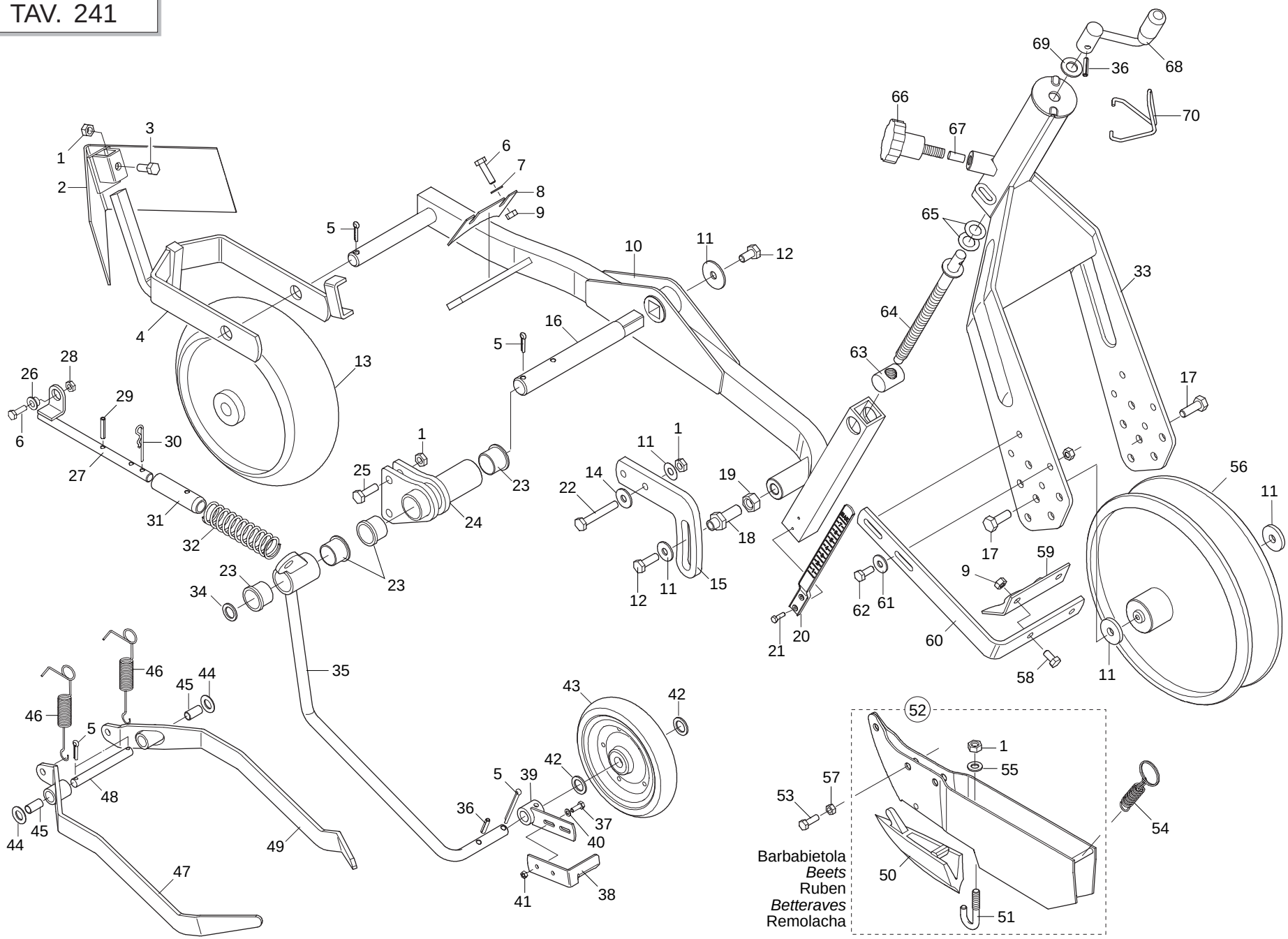




GASPARDO

## *BILANCIERE "SP"*

TAV. 241

| Pos. | Cod. | Descrizione | Description | Description | Benennung | Descripcion |
|---|---|---|---|---|---|---|
| 55 | F01430023 | ROS.M10 10,5X 18X0,9 U8842J ZN | WASHER D10 DIN 6798 D.INT.ZN | RONDELLE D10 DIN 6798 D. INT. | UNT. SCHEIBE D10 DIN 6798 D.IN | ARANDELA D10 DIN 6798 D.INT.ZN |
| 56 | G15421240 | RUOTA 290X80 FLEX | FLEX -BRASILE' WHEEL 290X80 | ROUE 290X80 FLEX 'BRASILE' | RAD 290X80 FLEX 'BRASILE' | RUEDA 290X80 FLEX 'BRASILE' |
| 57 | F01220033 | DADO M10X 1,5 D980 8 ZN | NUT M10X 1,5 D980 8 ZB | ECRO.M10X 1,5 D980 8 ZB | MUTT.M10X 1,5 D980 8 ZB | TUER.M10X 1,5 D980 8 ZB |
| 58 | F01020432 | VITE M 8X1,25X16 U5739 8.8 ZN | BOLT M 8X16 | VIS M 8X16 | SCHRAUBE M 8X16 | TORNILLO M 8X16 |
| 59 | G15421030 | RASCHIATERRA RUOTA POSTERIORE | SOIL SCRAPER REAR WHEEL | RACLEUR ROUE POSTERIEURE | ERDSCHABER HINTERES RAD | RASCADOR TIERRA TRASERO |
| 60 | G15421022 | SUPP.RASCHIATERRA RUOTA | SCRAPER SUPPORT WHEEL | SUPP. RACLEUR ROUES | HALTERUNG ERDSCHABER RADER | SOP.RASCADOR TIERRA RUEDAS |
| 61 | F01420048 | ROS.M8 8,4X 24X 2 U6593 ZN | PLANE WASHER D.8 | RONDELLE D.8 | SCHEIBE D.8 | ARANDELA D.8 |
| 62 | F01020440 | VITE M 8X1,25X25 U5739 8.8 ZN | BOLT M8 X25 5739 8.8 ZN | VIS M8 X25 5739 8.8 ZN | SCHRAUBE M8 X25 5739 8.8 ZN | TORNILLO M8 X25 5739 8.8 ZN |
| 63 | G22230063 | ELEMENTO ARTICOLATO | ARTICULATED ELEMENT | ELEMENT ARTICULE | GELENKELEMENT | ELEMENTO ARTICULADO |
| 64 | G22230062 | VITE DI REGOLAZIONE | ADJUSTMENT BOLT | VIS DE REGLAGE | EINSTELLSCHRAUBE | TORNILLO DE REGULACIN S |
| 65 | G22220073 | RONDELLA 28X0,3X16,5 | WASHER 28X0-3X16-5 | RONDELLE 28X0-3X16-5 | UNTERLEGSCHEIBE 28X0-3X16-5 | ARANDELA 28X0-3X16-5 |
| 66 | F06220013 | VOLANT.8L.PERN.M12X30-40 VPA55 | 8-LOBE PIN HANDWHEEL M12X30-40 | VOLANT 8 LOBES PIVOT M12X30-40 | HANDRAD.8L.ZAPFENM12X30-40 VPA | VOLDEL.8L.PERN.M12X30-40 VPA55 |
| 67 | G14820991 | FERMO REGOLAZIONE | ADJUSTMENT STOP | BUTEE REGLAGE | EINSTELLUNGSSPERRE | BLOQUEO REGULACIËN |
| 68 | G22270235 | MANIGLIA REGOLAZIONE B4 | ADJUSTMENT HANDLE B4 | POIGNEE REGLAGE B4 | EINSTELLGRIFF B4 | MANIJA REGULACIN B4 M |
| 69 | F01410088 | ROS.M14 15X 28X2,5 U6592 ZN | WAS.M14 15X 28X2,5 U6592 ZB | RON.M14 15X 28X2,5 U6592 ZB | SCH.M14 15X 28X2,5 U6592 ZB | ARA.M14 15X 28X2,5 U6592 ZB |
| 70 | G65336100 | MOLLA SPEC.FERMO MANIGLIA SP | SPEC SPRING HANDLE STOP SP | RESSORT SPEC. ARRET POIGNEE SP | SPEZIALFEDER GRIFFSPERRE SP | MUELLE ESPEC. BLOQUEO MANIJA S |

TAV. 251

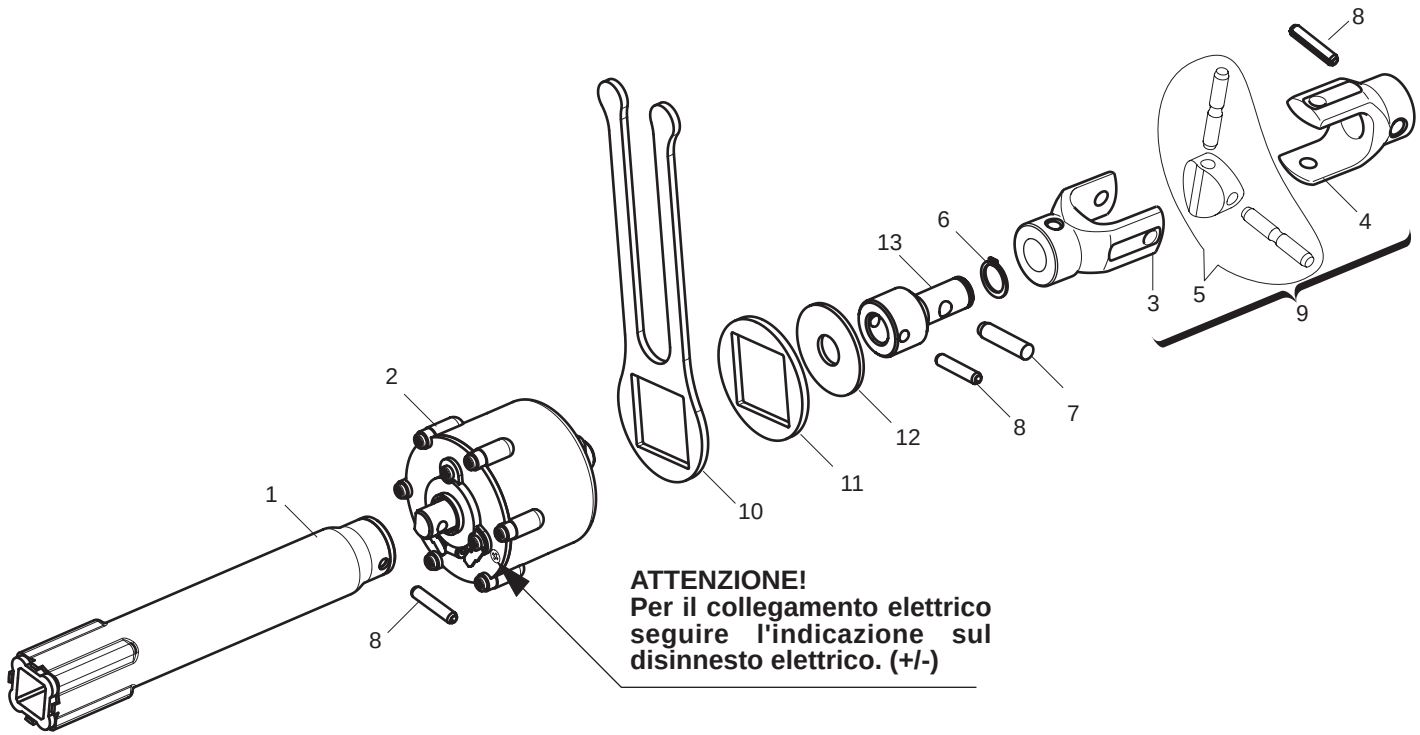




GASPARDO

## *ESCLUSIONE ELETTRICA FILE DI SEMINA*

TAV. 251

| Pos. | Cod. | Descrizione | Description | Description | Benennung | Descripcion |
|---|---|---|---|---|---|---|
| 1 | G15424011 | INNESTO ESCL.ELETTRICA SP | ELECTRIC DISABLE CONNECTION SP | ACCOUPL. EXCL.+LECTRIQUE SP | STECKVORRICHT.ELEKT.AUSSCHALTU | CONECTOR DESC.EL+CTRICA SP |
| 2 | G16033701 | DISINNESTO ELETTRICO 180 COMPL | COMPL. ELECTRIC RELEASE 180 | D+BRAYAGE +LECTRIQUE 180 COMPL | ELEKTRISCHE ENTKUPPLUNG 180 KO | DESCONEXIËN EL+CTRICA 180 COMP |
| 3 | G19204080 | FORCELLA | | | | |
| 4 | G19204090 | FORCELLA | | | | |
| 5 | G22270454 | CROCIERA COMPL. SP/S | SPIDER SP/S | CROSILLON COMPL CARDAN TRANSM | GELENKKREUZ KOMPL. SP/S | CRUCETA COMPL. SP/S |
| 6 | F02050045 | ANELLO E. DE 16X 1 U7435 C70 | SEEGER RING 16X 1 U7435 C70 | BAGUE SEEGER 16 X 1 U7435 C70 | SEEGERING 16 X 1 U7435 C70 | ANILLO 16X 1 U7435 C70 |
| 7 | F04150011 | BOCCOLA AUTOL.40,5X30X5X33 | SELF-LOCKING BUSHING 40-5X30X5 | BOITE AUTOL. 40-5X30X5X33 | BUCHSE SELBST. 40-5X30X5X33 | CASQUILL0 AUTOL.40-5X30X5X33 |
| 8 | F02100114 | SPINA E.P. 6X 30 U6873 C70 BR | ELASTIC PIN 6X30 | GOUJON ELASTIQUE 6X30 | SPANNHUELSE 6X30 | ESPINA ELASTICA 6X30 |
| 9 | G15423980 | FORCELLE SNODO ESCL.ELET.COMPL | FORK ELECTRIC DISABLE COMPLET | FOURCHETTE EXCL. +LECTR. COMPL | STAFEL ELEKT.AUSSCHALTU KOMPL. | HORQUILLA DESC.EL+CTRICA COMPL |
| 10 | G16033750 | FERMO DISINNESTO ELETTRICO ZN | UNCOUPLING ELECTRIC STOP | ARRET DEBRAYAGE +LECT. | FESTSTELL. AUSKUPPLUNG EL. | BLOQUEO DESCONEXIN EL. |
| 11 | G16033740 | DISTANZIALE DISINNESTO ELET.ZN | UNCOUPLING ELECTRIC SPACER | ENTRETOISE DEBRAYAGE +LECT. | DISTANZST_CK AUSKUPPLUNG EL. | DISTANCIADOR DESCONEXIN EL. |
| 12 | G18701970 | RONDELLA 16X48X2,5 | WASHER 16X48X2,5 | RONDELLE 16X48X2,5 | UNTERLEGSCHEIBE 16X48X2,5 | ARANDELA 16X48X2,5 |
| 13 | G16033730 | ADATTATORE CROCIERA | SPIDER ADAPTOR | ADAPTATEUR CROISIERE | PASSST_CK GELENKKREUZ | ADAPTADOR CRUCETA |

TAV. 261

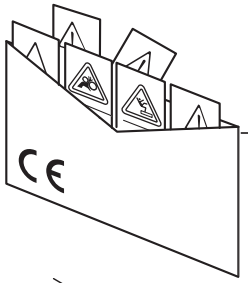


13
DECALCOMANIE AVVERTIMENTO
DECAL
DBZIEHBILD
DECALCOMANIE
CALCOMANIE
CALCOMANIE

GASPARDO
METRO
14

5
Rosso Gaspardo - 1Kg
Gaspardo red - 1Kg
Rot Gaspardo - 1Kg
Rouge Gaspardo - 1Kg
Rojo Gaspardo - 1Kg

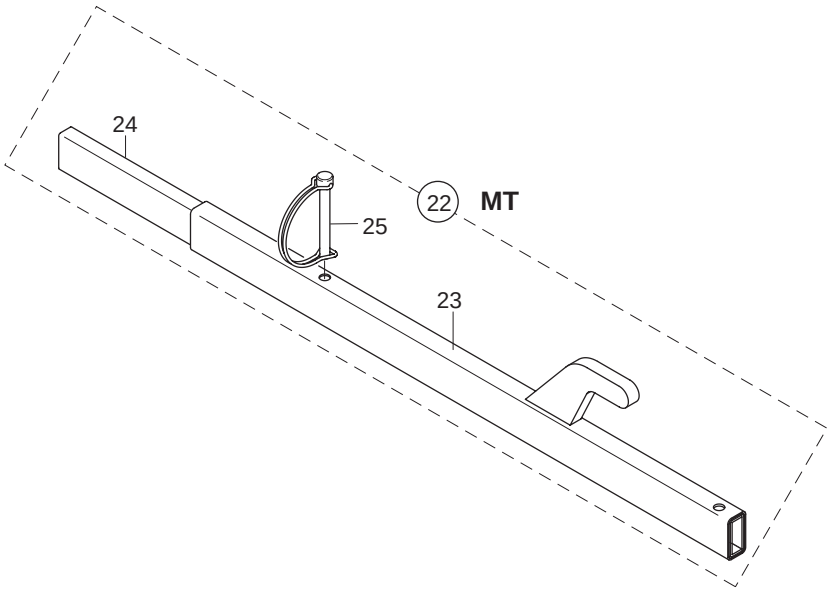


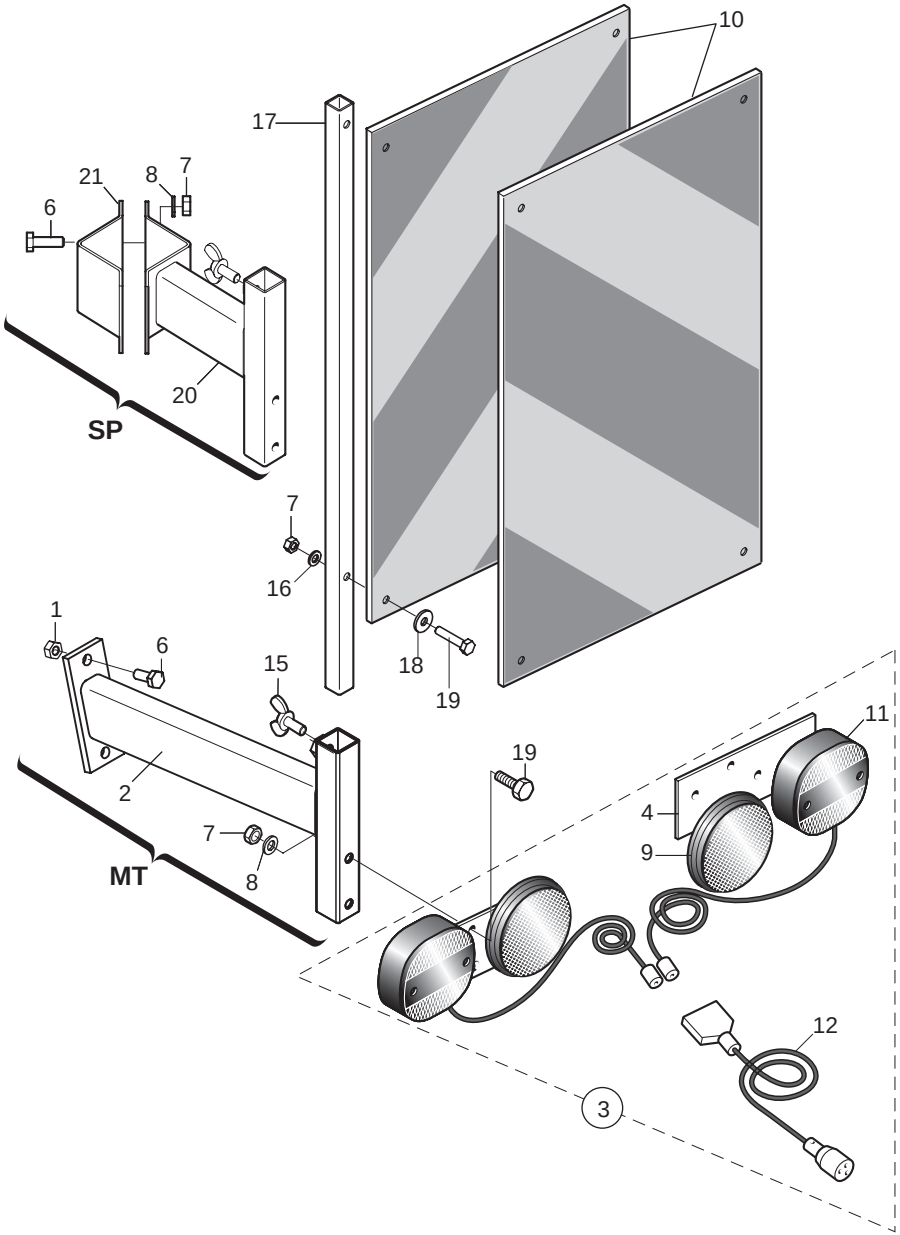

## *ACCESSORI*

TAV. 261

| Pos. | Cod. | Descrizione | Description | Description | Benennung | Descripcion |
|---|---|---|---|---|---|---|
| 1 | F01200232 | DADO M 6X 1 U5588 6.8 ZN | | | | |
| 2 | G15211760 | SUPPORTO LUCI POST. | LIGHTS SUPPORT | SUPPORT ECLAIRAGE | LICHTERHALTERUNG | SOPORTE LUCES |
| 3 | G13616620 | KIT LUCI PER MACCHINE PORTATE | LIGHT KIT FOR MOUNTED MACHINE | KIT FEUX POUR MACHINES PORT+ES | KIT LICHTER F_R FÍRDERMASCHINE | KIT LUCES PARA M-QUINAS SUSPEN |
| 4 | G13616570 | PIASTRA SUPP.LUCI | LIGHTS SUPPORT PLATE | PLAQUE DE SUPPORT ECLAIRAGE | LICHTERHALTERUNGSPLATTE | PLACA SOPORTE LUCES |
| 5 | F03200251 | ROSSO GASPARDO RAL3020 BICOMP. | | | | |
| 6 | F01020403 | VITE M 6X 1X 16 U5739 8.8 ZN | BOLT M 6X16 | VIS M 6X16 | SCHRAUBE M 6X16 | TORNILLO M 6X16 |
| 7 | F01220011 | DADO M 6X 1 D980 8 ZN | SELF LOCKING NUT M6 | ECROU AUTOBL. M6 | SELBSTSPERR.MUTTER M6 | DADO AUTOBL. M6 |
| 8 | F01410037 | ROS.M6 6,4X12,5X1,6 U6592 ZN | PLANE WASHER D.6 | RONDELLE D.6 | SCHEIBE D.6 | ARANDELA D.6 |
| 9 | F05010221 | CATARIFRANGENTE TONDO D.80 > | D.80 ROUND REFLECTOR | CATADIOPTRE ROND D.80 | RUNDER R_CKSTRAHLER D.80 | PAPEL REFRACTARIO REDONDO D.80 |
| 10 | F05010357 | N.2 PANNELLI CARICHI SPORGENTI | N[ JUTTING LOAD PANELS | N. 2 PANNEAUX CHARGES SAILLANT | N.2 TAFELN VORSPRINGENDE LADUN | 2 PANELES CARGADOS SALIENTES |
| 11 | F05010076 | FANALE X KIT LUCI | LAMP KIT LIGHTS COMPL. | FEU KIT ECLAIRAGE COMPL. | LAMPEN KIT LICHT KOMPL. | FAROL SET LUCES COMPL. |
| 12 | F05010080 | CABLAGGIO PER KIT LUCI | LIGHT WIRING HARNESS | CABLAGE KIT PHARES | VERKABELUNG LAMPENKIT | CABLEADO JUEGO LUCES |
| 13 | G89900500 | KIT DECALCOMANIE -CE- | DECAL KIT -CE- | KIT DECALCOMANIE -CE- K | IT ABZIEHB. -CE- S | ET CALCOMANAS -CE- |
| 14 | G89900511 | KIT DECALCOMANIE SP-MT | DECAL KIT SP | KIT DECALCOMANIE SP | KIT ABZIEHB. SP | SET CALCOMANAS SP |
| 15 | F01090215 | VITE M 8X1,25X15 U5449 5.8 ZN | BOLT 8X15 UNI 5449 5.8 GALVANI | VIS 8X15 UNI 5449 5.8 ZN | SCHRAUBE 8X15 UNI 5449 5.8 ZN | TORNILLO 8X15 UNI 5449 5.8 ZN |
| 16 | F01410037 | ROS.M6 6,4X12,5X1,6 U6592 ZN | PLANE WASHER D.6 | RONDELLE D.6 | SCHEIBE D.6 | ARANDELA D.6 |
| 17 | G15412650 | TUBO Q. 16X1,5X 643 ZN | GALVAN. SQUARE 16X1,5X643 | TUBE CARRE 16X1,5X643 ZN | ROHR Q. 16X1,5X643 ZN | TUBO CUADRADO 16X1,5X643 ZN |
| 18 | F01420036 | ROS.M6 6,4X 18X 2 U6593 ZN | FLAT WASHER 6-6X 18X2 6593 ZN | ROND. PLATE 6-6X 18X2 6593 ZN | SCHEIBE 6-6X 18X2 6593 ZN | ARAND. PLANA 6-6X 18X2 6593 ZN |
| 19 | F01020408 | VITE M 6X 1X 30 U5739 8.8 ZN | BOLT M 6X1X30 | VIS M 6X1X30 | SCHRAUBE M 6X1X30 | TORNILLO M 6X1X30 |
| 20 | G15412640 | SUPPORTO KIT LUCI POST. | REAR LIGHT SUPPORT KIT | SUPPORT KIT FEUX ARRI+RE | HALTERUNG KIT HINT. LICHTER | SOPORTE KIT LUCES POST. |
| 21 | G15411260 | FORCELLA LUCI ZN | OPENING FORK ZN | FOURCHE FEUX ZN | LICHTERGABEL ZN | HORQUILLA LUCES ZN |
| 22 | G15225390 | LEVA SOLLEV.SEMINAT.COMPL MT | LIFTING LEVER COMPLETE | LEVIER DE LEVAGE COMPLETE | HEBELHUB KOMPLETT | PALANCA LEVANTAMIENTO COMPL. |
| 23 | G15225380 | LEVA SOLLEVAMENTO ELEMENTO | LIFTING LEVER | LEVIER DE LEVAGE | HEBELHUB | PALANCA LEVANTAMIENTO |
| 24 | G15225370 | TUBO R.35X15X1,5X750 FORATO | TUBE R.35X15X1,5X750 | TUBE R.35X15X1,5X750 | ROHR R.35X15X1,5X750 | TUBO R.35X15X1,5X750 |
| 25 | F02200562 | SPINA SICUR. D. 8X70 ZN | SPLIT PIN D.8X70 ZB | GOUPILLE D.8X70 ZB | BOLZEN D.8X70 ZB | PERNO D.8X70 ZB |

# TAV. 270

| Codice<br>*Code*<br>Code<br>*Kodex*<br>Codigo | Nr e fori<br>*Nr and ø holes*<br>Nr et trous<br>*Nr und ø löcher*<br>Nr y agujeros | | Coltura | *Seeds* | Cultures | *Samen* | Semillas | Distanza semina<br>Seeding dist.<br>Dist. de semis<br>Saatabstandes<br>Dist. siembra |
|---|---|---|---|---|---|---|---|---|
| 22230298 | 20 | 0,8 **(1)** | | | | | | |
| 22230319 | 20 | 1 **(1)** | Cavolo broccolo | *Broccoli* | Chou-Broccoli | *Brokkoli* | Bróculi | |
| 22230327 | 20 | 1,1 **(1)** | Cavolo verza | *Cabbage,Savoy* | Chou de Milan | *Wirsing* | Col de Milán | |
| 22230320 | 20 | 1,5 | | | | | | |
| 22230294 | 20 | 2,1 | Zucchino<br>Melone<br>Anguria<br>Cardo | *Squash*<br>*Melon*<br>*Watermelon*<br>- | Courgette<br>Melon<br>Past que<br>- | *Kürbis*<br>*Melone*<br>*Wassermelone*<br>- | Calabacín<br>Melón<br>Sandía<br>- | **min.10,4 cm.** |
| 22230203 | 20 | 2,5 | Girasole | *Sunflower* | Tournesol | *Sonnenblumen* | Girasol | |
| 22230192 | 20 | 3,5 | Cotone<br>Mais (Piccolo) | *Cotton*<br>*Corn (Little)* | -<br>Mais (Petit) | *Baumwohl*<br>*Mais (Klein)* | -<br>Maiz (Peque o) | **max. 41,7 cm.** |
| 22230048 | 20 | 4,5 | Mais | *Corn* | Mais | *Mais* | Maiz | |
| 22230047 | 20 | 5,5 | Mais (Grosso)<br>Ceci<br>Fagiolo borlotto<br>e cannellino<br>Arachidi | *Corn (Big)*<br>*Pulses*<br>*Beans*<br><br>*Peanut* | Mais (Gros)<br>-<br>Haricot<br><br>- | *Mais (Grosse)*<br>-<br>*Bohnen*<br><br>- | Maiz (Grueso)<br>-<br>Poroto<br><br>- | |
| 22230205 | 20 | 7 | Arachidi<br>Lupino | *Peanut*<br>- | -<br>- | -<br>- | -<br>- | |
| 10124030R | 26 | 1 **(1)** | | | | | | |
| 22230253 | 26 | 1,5 | | | | | | |
| 22230296 | 26 | 2,1 | Zucchino<br>Melone<br>Anguria<br>Cardo | *Squash*<br>*Melon*<br>*Watermelon*<br>- | Courgette<br>Melon<br>Past que<br>- | *Kürbis*<br>*Melone*<br>*Wassermelone*<br>- | Calabacín<br>Melón<br>Sandía<br>- | **min. 8 cm.** |
| 22230289 | 26 | 2,5 | Girasole | *Sunflower* | Tournesol | *Sonnenblumen* | Girasol | |
| 22230249 | 26 | 3,5 | Cotone<br>Mais (Piccolo) | *Cotton*<br>*Corn (Little)* | -<br>Mais (Petit) | *Baumwohl*<br>*Mais (Klein)* | -<br>Maiz (Peque o) | |
| 22230050 | 26 | 4,5 | Mais | *Corn* | Mais | *Mais* | Maiz | **max. 32,1 cm.** |
| 22230303 | 26 | 5 | | | | | | |
| 22230049 | 26 | 5,5 | Mais (Grosso)<br>Ceci<br>Fagiolo borlotto<br>e cannellino<br>Arachidi | *Corn (Big)*<br>-<br>*Beans*<br><br>- | Mais (Gros)<br>-<br>Haricot<br><br>- | *Mais (Grosse)*<br>-<br>*Bohnen*<br><br>- | Maiz (Grueso)<br>-<br>Poroto<br><br>- | |
| 22230317 | 36 | 1,1 **(1)** | Pomodoro | *Tomato* | Tomate | *Tomate* | Tomate | |
| 22230196 | 36 | 1,5 | Lenticchia<br>Cetriolo<br>Pomodoro conf.<br>2,5÷3,5 mm | -<br>*Cucumber*<br>*Tomato pilled*<br>*ø 2,5÷3,5 mm* | -<br>Concombre<br>Tomate enrob<br>2,5÷3,5 mm | -<br>*Gurke*<br>*Tomate pilliert*<br>*ø 2,5÷3,5 mm* | -<br>Pepino<br>Tomate conf.<br>2,5÷3,5 mm | |
| 22230051 | 36 | 2,1 | Barbabietola<br>Zucchino<br>Melone<br>Anguria<br>Cardo<br>Sorgo<br>Sesamo | *Beets*<br>*Squash*<br>*Melon*<br>*Watermelon*<br>-<br>*Sorghum*<br>- | Betteraves<br>Courgette<br>Melon<br>Past que<br>-<br>Sorgo<br>- | *Rüben*<br>*Kürbis*<br>*Melone*<br>*Wassermelone*<br>-<br>*Hirse*<br>- | Remolacha<br>Calabacín<br>Melón<br>Sandía<br>-<br>Sorgo<br>- | **min. 5,8 cm.** |

| Codice<br>*Code*<br>Code<br>*Kodex*<br>Codigo | Nr e fori<br>*Nr and ø holes*<br>Nr et trous<br>*Nr und ø löcher*<br>Nr y agujeros | | Coltura | *Seeds* | Cultures | *Samen* | Semillas | Distanza semina<br>Seeding dist.<br>Dist. de semis<br>Saatabstandes<br>Dist. siembra |
|---|---|---|---|---|---|---|---|---|
| 22230290 | 36 | 2,5 | Pomodoro conf.<br>3,5÷4,5 mm<br>Ginseng | *Tomato pilled*<br>*ø 3,5÷4,5 mm*<br>*Ginseng* | Tomate enrob<br>3,5÷4,5 mm<br>Ginseng | *Tomate pilliert*<br>*ø 3,5÷4,5 mm*<br>*Ginseng* | Tomate conf.<br>3,5÷4,5 mm<br>Ginseng | **max. 23,2 cm.** |
| 22230197 | 36 | 3,5 | Fagiolino<br>Piselli<br>Soia | *Beans (Little)*<br>*Peas*<br>*Soyabeans* | Haricot (Petit)<br>Pois<br>Soja | *Grüne Bohnen*<br>*Erbsen*<br>*Soja* | Judias verdes<br>Arveja<br>Soja | |
| 22230199 | 36 | 4,5 | Fagiolo<br>Piselli<br>Favino | *Beans*<br>*Peas*<br>- | Haricot<br>Pois<br>- | *Bohnen*<br>*Erbsen*<br>- | Poroto<br>Arveja<br>- | |
| 22230295 | 36 | 5,5 | Fagiolo | *Beans* | Haricot | *Bohnen* | Poroto | |
| 10123760R | 36 | 5,5 **(2)** | Fagiolo | *Beans* | Haricot | *Bohnen* | Poroto | |
| 22230304 | 36 | 7 | | | | | | |
| 22230321 | 52 | 1,5 | | | | | | **min. 4 cm.** |
| 22230328 | 52 | 2,1 | Barbabietola | *Beets* | Betteraves | *Rüben* | Remolacha | |
| 22230299 | 52 | 2,5 | | | | | | |
| 22230316 | 52 | 3,5 | Fagiolino | *Beans (Little)* | Haricot (Petit) | *Grüne Bohnen* | Judias verdes | |
| 22230288 | 52 | 4,25 | Soia | *Soyabeans* | Soja | *Soja* | Soja | **max. 16 cm.** |
| 22230194 | 72 | 0,5 **(1)** | Endivia<br>Lattuga | *Endive*<br>*Lettuce* | Chicor e<br>Laitue | *Winterendivien*<br>*Kopfsalat* | Escarola<br>Lechuga | |
| 22230195 | 72 | 0,8 **(1)** | Endivia<br>Lattuga<br>Rapa<br>Senape<br>Finocchio<br>Anice | *Endive*<br>*Lettuce*<br>*Turnip*<br>*Mustard*<br>*Fennel*<br>- | Chicor e<br>Laitue<br>Navet<br>Moutarde<br>Fenouil<br>- | *Winterendivien*<br>*Kopfsalat*<br>*Speiserüben*<br>*Senft*<br>*Fenchel*<br>- | Escarola<br>Lechuga<br>Nabo<br>-<br>Hinojo<br>- | |
| 22230193 | 72 | 1,1 **(1)** | Pomodoro<br>Rapa<br>Finocchio<br>Colza<br>Panico | *Tomato*<br>*Turnip*<br>*Fennel*<br>*Canola*<br>- | Tomate<br>Navet<br>Fenouil<br>Colza<br>- | *Tomate*<br>*Speiserüben*<br>*Fenchel*<br>*Raps*<br>- | Tomate<br>Nabo<br>Hinojo<br>Colza<br>- | **min. 2,9 cm.** |
| 22230257 | 72 | 1,5 | Spinacio<br>Ravanello<br>Asparagio<br>Pomodoro conf.<br>2,5÷3,5 mm | *Spinach*<br>*Radish*<br>*Asparagus*<br>*Tomato pilled*<br>*ø 2,5÷3,5 mm* | Epinard<br>Radis<br>Asperge<br>Tomate enrob<br>2,5÷3,5 mm | *Spinat*<br>*Radies*<br>*Spargel*<br>*Tomate pilliert*<br>*ø 2,5÷3,5 mm* | Espinaca<br>Rabanito<br>Espárrago<br>Tomate conf.<br>2,5÷3,5 mm | **max. 11,6 cm.** |
| 22230213 | 72 | 2,1 | Bieta a coste<br>Saggina | *Swiss Chard*<br>- | Poir e<br>- | *Mangold*<br>- | Acelga<br>- | |
| 10124040R | 72 | 2,5 | | | | | | |
| 22230198 | 72 | 3,5 | Fagiolino<br>Soia | *Beans (Little)*<br>*Soyabeans* | Haricot (Petit)<br>Soja | *Grüne Bohnen*<br>*Soja* | Judias verdes<br>Soja | |
| 10124020R | 72 | 4,25 | Soia | *Soyabeans* | Soja | *Soja* | Soja | |
| 22230256 | 72 | 4,5 | | | | | | |

## *DISCHI DI SEMINA*

TAV. 270

| Pos. | Cod. | Descrizione | Description | Description | Benennung | Descripcion |
|---|---|---|---|---|---|---|
| 1 | G10121460 | DISCO 96 FORI D 1,0 SP | DISK 96 HOLES D.1,0 SP | DISQUE 96 TROUS D. 1,0 SP | SCHEIBE 96 LTCHER D.1,0 SP | DISCO 96 ORIFICIOS D. 1,0 SP |
| 2 | G10123970 | DISCO 102 F.D.2 SP | DISK 102 HOLES D. 2 SP | DISQUE 102 TROUS D. 2 SP | SCHEIBE 102 LTCHER D.2 SP | DISCO 102 ORIFICIOS D. 2 SP |
| 3 | G10124010 | DISCO 60 FORI D.4,5 SP LM | DISK 60 HOLES D.4-5 SP LM | DISQUE 60 TROUS D. 4-5 SP LM | SCHEIBE 60 LTCHER D.4-5 SP LM | DISCO 60 ORIFICIOS D.4-5 SP LM |
| 4 | G10124020 | DISCO 72 FORI D.4,25 SP LM | DISK 72 HOLES D.4-25 SP LM | DISQUE 72 TROUS D. 4-25 SP LM | SCHEIBE 72 LTCHER D.4-25 SP | DISCO 72 ORIFICIOS D.4-5 SP LM |
| 5 | G10124030 | DISCO ACC. 26 FORI D 1,0 SP | STEEL DISK 26 HOLES D 1.0 SP | DISQUE ACC. 26 TROUS D 1-0 SP | SCHEIBE ZUB. 26 LTCHER D 1-0 S | DISCO AC. 26 ORIFICIOS D 1-0 S |
| 6 | G10124040 | DISCO ACC. 72 FORI D 2,5 SP | DISK ST. 72 H. D 2,5 | DISQUE ACIER 72 TROUS D 2,5 | STAHLSCHEIBE 72 L. D 2,5 | DISCO ACERO 72 ORIF. D 2,5 |
| 7 | G10124050 | DISCO ACC.104 FORI D 1,1 SP | STEEL DISC 104 HOLES D 1.1 SP | DISQUE ACIER 104 TROUS D 1,1 | STAHLSCHEIBE 104 BOHR. D 1,1 | DISCO ACC.104 AGUJEROS D 1,1 |
| 8 | G10124060 | DISCO 26 F. D.4 | DISC 26 F. D.4 | DISQUE 26 TROUS D.4 | SCHEIBE 26 B. D.4 | DISCO 26 AGUJEROS Ï 4 |
| 9 | G10124070 | DISCO 36 FORI D 1,7 SP LM | DISK 36 HOLES D.1.7 SP LM | DISQUE 36 TROUS D.1,7 SP LM | SCHEIBE 36 LTCHER D.1,7 SP LM | DISCO 36 ORIFICIOS D.1,7 SP LM |
| 10 | G10124090 | DISCO 6 FORI D.4,5 | DISK 6 HOLES D.4,5 | DISQUE 6 TROUS D. 4,5 | SCHEIBE 6 LTCHER D.4,5 | DISCO 6 ORIFICIOS D.4,5 |
| 11 | G10124100 | DISCO 6 FORI D.3,0 | DISK 6 HOLES D.3,0 | DISQUE 6 TROUS D. 3,0 | SCHEIBE 6 LTCHER D.3,0 | DISCO 6 ORIFICIOS D.3,0 |
| 12 | G22230047 | DISCO 20 F. D.5,5 SP LM | DISK 20 H. D.5-5 CORN SP LM | DISQUE 20 TROUS D. 5-5 MAIS SP | SCHEIBE 20 L. D.5-5 MAIS SP LM | DISCO 20 ORIF. D.5-5 MAZ SP LD |
| 13 | G22230048 | DISCO 20 F. D.4,5 SP LM | DISK 20 H. D.4-5 SUNF..SP LM | DISQUE 20 TROUS D. 4-5 TOURN. | SCHEIBE 20 L. D.4-5 SONNENBLU. | DISCO 20 ORIF. D.4-5 GIRA.SP L |
| 14 | G22230049 | DISCO 26 F. D.5,5 SP LM | DISK 26 H. D.5-5 CORN SP LM | DISQUE 26 TROUS D. 5-5 MAIS SP | SCHEIBE 26 L. D.5-5 MAIS SP LM | DISCO 26 ORIF. D.5-5 MAZ SP LD |
| 15 | G22230050 | DISCO 26 F. D.4,5 SP LM | DISK 26 H. D.4-5 CORN SP LM | DISQUE 26 TROUS D. 4-5 MAIS | SCHEIBE 26 L. D.4-5 MAIS | DISCO 26 ORIF. D.4-5 MAIZ SP L |
| 16 | G22230051 | DISCO 36 F. D.2,1 SP LM | DISK 36 H. D.2-1 BEET.SP LM | DISQUE 36 TROUS D. 2-1 BETTES | SCHEIBE 36 L.R. D.2-1 RsBEN SP | DISCO 36 ORIF. D.2-1 REMOLACHA |
| 17 | G22230192 | DISCO 20 FORI D.3,5 SP LM | DISK 20 HOLES D.3-5 SP LM | DISQUE 20 TROUS D. 3-5 SP LM | SCHEIBE 20 LTCHER D.3-5 SP LM | DISCO 20 ORIFICIOS D.3-5 SP LM |
| 18 | G22230193 | DISCO 72 FORI D.1,1 SP LM | DISK 72 HOLES D.1-1 SP LM | DISQUE 72 TROUS D. 1-1 SP LM | SCHEIBE 72 LTCHER D.1-1 SP LM | DISCO 72 ORIFICIOS D.1-1 SP LM |
| 19 | G22230194 | DISCO 72 FORI D.0,5 SP LM | DISK 72 HOLES D.0-5 SP LM | DISQUE 72 TROUS D. 0-5 SP LM | SCHEIBE 72 LTCHER D.0-5 SP LM | DISCO 72 ORIFICIOS D.0-5 SP LM |
| 20 | G22230195 | DISCO 72 FORI D.0,8 SP LM | DISK 72 HOLES D.0-8 SP LM | DISQUE 72 TROUS D. 0-8 SP LM | SCHEIBE 72 LTCHER D.0-8 SP LM | DISCO 72 ORIFICIOS D.0-8 SP LM |
| 21 | G22230196 | DISCO 36 FORI D.1,5 SP LM | DISK 36 HOLES D.1-5 SP LM | DISQUE 36 TROUS D. 1-5 SP LM | SCHEIBE 36 LTCHER D.1-5 SP LM | DISCO 36 ORIFICIOS D.1-5 SP LM |
| 22 | G22230197 | DISCO 36 FORI D.3,5 SP LM | DISK 36 HOLES D.3-5 SP LM | DISQUE 36 TROUS D. 3-5 SP LM | SCHEIBE 36 LTCHER D.3-5 SP LM | DISCO 36 ORIFICIOS D.3-5 SP LM |
| 23 | G22230198 | DISCO 72 FORI D.3,5 SP LM | DISK 72 HOLES D.3-5 SP LM | DISQUE 72 TROUS D. 3-5 SP LM | SCHEIBE 72 LTCHER D.3-5 SP LM | DISCO 72 ORIFICIOS D.3-5 SP LM |
| 24 | G22230199 | DISCO 36 FORI D.4,5 SP LM | DISK 36 HOLES D.4-5 SP LM | DISQUE 36 TROUS D. 4-5 SP LM | SCHEIBE 36 LTCHER D.4-5 SP LM | DISCO 36 ORIFICIOS D.4-5 SP LM |
| 25 | G22230203 | DISCO 20 F0RI D.2,5 SP LM | DISK 20 HOLES D.2-5 SP LM | DISQUE 20 TROUS D. 2-5 SP LM | SCHEIBE 20 LÖCHER D.2-5 SP LM | DISCO 20 ORIF. D.2-5 SP LM |
| 26 | G22230205 | DISCO 20 F. D.7,0 ARAC.SP LM | DISK 20 H. D.7-0 PEAN..SP LM | DISQUE 20 TROUS D. 7-0 ARACHID | SCHEIBE 20 L. D.7-0 ERDNUSS SP | DISCO 20 ORIF. D.7-0 CACAH. SP |
| 27 | G22230213 | DISCO 72 FORI D.2,1 SP LM | DISK 72 HOLES D.2-1 SP LM | DISQUE 72 TROUS D. 2-1 SP LM | SCHEIBE 72 LTCHER D.2-1 SP LM | DISCO 72 ORIFICIOS D.2-1 SP LM |
| 28 | G22230216 | DISCO 144 FORI D.1,1 SP LM | DISK 144 HOLES D.1-1 SP LM | DISQUE 144 TROUS D. 1-1 SP LM | SCHEIBE 144 LTCHER D.1-1 SP LM | DISCO 144 ORIFICIOS D.1-1 SP L |
| 29 | G22230217 | DISCO 36 FORI D.5,5 SP LM | DISK 36 HOLES D.5-5 SP LM | DISQUE 36 TROUS D. 5-5 SP LM | SCHEIBE 36 LTCHER D.5-5 SP LM | DISCO 36 ORIFICIOS D.5-5 SP LM |
| 30 | G22230249 | DISCO 26 FORI D 3,5 SP LM | DISK 26 HOLES D 3-5 SP LM | DISQUE 26 TROUS D 3-5 SP LM | SCHEIBE 26 LTCHER D 3-5 SP LM | DISCO 26 ORIFICIOS D 3-5 SP LM |
| 31 | G22230250 | DISCO 144 FORI D.2,1 SP LM | DISK 144 HOLES D.2-1 SP LM | DISQUE 144 TROUS D. 2-1 SP LM | SCHEIBE 144 LTCHER D.2-1 SP LM | DISCO 144 ORIFICIOS D.2-1 SP L |
| 32 | G22230253 | DISCO 26 FORI D.1,5 SP LM | DISK 26 HOLES D.1-5 SP LM | DISQUE 26 TROUS D. 1-5 SP LM | SCHEIBE 26 LTCHER D.1-5 SP LM | DISCO 26 ORIFICIOS D.1-5 SP LM |
| 33 | G22230256 | DISCO 72 FORI D.4,5 SP LM | DISK 72 HOLES D.4-5 SP LM | DISQUE 72 TROUS D. 4-5 SP LM | SCHEIBE 72 LTCHER D.4-5 SP LM | DISCO 72 ORIFICIOS D.4-5 SP LM |
| 34 | G22230257 | DISCO 72 FORI D.1,5 SP LM | DISK 72 HOLES D.1-5 SP LM | DISQUE 72 TROUS D. 1-5 SP LM | SCHEIBE 72 LTCHER D.1-5 SP LM | DISCO 72 ORIFICIOS D.1-5 SP LM |
| 35 | G22230287 | DISCO 144 FORI D.1,5 SP LM | DISK 144 HOLES D.1-5 SP LM | DISQUE 144 TROUS D. 1-5 SP LM | SCHEIBE 144 LTCHER D.1-5 SP LM | DISCO 144 ORIFICIOS D.1-5 SP L |
| 36 | G22230288 | DISCO 52 FORI D.4,25 SP LM | DISK 52 HOLES D.4-25 SP LM | DISQUE 52 TROUS D. 4-25 SP LM | SCHEIBE 52 LTCHER D.4-25 SP LM | DISCO 52 ORIFICIOS D.4-25 SP L |
| 37 | G22230289 | DISCO 26 FORI D.2,5 SP LM | DISK 26 HOLES D.2-5 SP LM | DISQUE 26 TROUS D. 2-5 SP LM | SCHEIBE 26 LTCHER D.2-5 SP LM | DISCO 26 ORIFICIOS D.2-5 SP LM |
| 38 | G22230290 | DISCO 36 FORI D.2,5 SP LM | DISK 36 HOLES D.2-5 SP LM | DISQUE 36 TROUS D. 2-5 SP LM | SCHEIBE 36 LTCHER D.2-5 SP LM | DISCO 36 ORIFICIOS D.2-5 SP LM |
| 39 | G22230294 | DISCO 20 FORI D.2,1 SP LM | DISK 20 HOLES D.2-1 SP LM | DISQUE 20 TROUS D. 2-1 SP LM | SCHEIBE 20 LTCHER D.2-1 SP LM | DISCO 20 ORIFICIOS D.2-1 SP LM |
| 40 | G22230296 | DISCO 26 FORI D.2,1 SP LM | DISK 26 HOLES D.2-1 SP LM | DISQUE 26 TROUS D. 2-1 SP LM | SCHEIBE 26 LÖCHER D.2-1 SP LM | DISCO 26 ORIFICIOS D.2-1 SP LM |
| 41 | G22230297 | DISCO 144 FORI D.0,8 SP LM | DISK 144 HOLES D.0-8 SP LM | DISQUE 144 TROUS D. 0-8 SP LM | SCHEIBE 144 LTCHER D.0-8 SP LM | DISCO 144 ORIFICIOS D.0-8 SP L |
| 42 | G22230298 | DISCO 20 FORI D.0,8 SP LM | DISK 20 HOLES D.0-8 SP LM | DISQUE 20 TROUS D. 0-8 SP LM | SCHEIBE 20 LTCHER D.0-8 SP LM | DISCO 20 ORIFICIOS D.0-8 SP LM |
| 43 | G22230299 | DISCO 52 FORI D.2,5 SP LM | DISK 52 HOLES D.2-5 SP LM | DISQUE 52 TROUS D. 2-5 SP LM | SCHEIBE 52 LTCHER D.2-5 SP LM | DISCO 52 ORIFICIOS D.2-5 SP LM |
| 44 | G22230300 | DISCO POST.10G-3F-D2,1 SP LM | DISK POST.10G-3F-D2-1 SP LM | DISQUE ARRIERE 10G. 3 TROUS D2 | HINTERSCHEIBE 10G-3L-D2-1 SP L | DISCO TRAS.10G. 3 ORIF. D2-1 S |
| 45 | G22230301 | DISCO 144 FORI D.0,5 SP LM | DISK 144 HOLES D.0-5 SP LM | DISQUE 144 TROUS D. 0-5 SP LM | SCHEIBE 144 LTCHER D.0-5 SP LM | DISCO 144 ORIFICIOS D.0-5 SP L |
| 46 | G22230303 | DISCO 26 FORI D.5,0 SP LM | DISK 26 HOLES D.5-0 SP LM | DISQUE 26 TROUS D. 5-0 SP LM | SCHEIBE 26 LTCHER D.5-0 SP LM | DISCO 26 ORIFICIOS D.5-0 SP LM |
| 47 | G22230304 | DISCO 36 FORI D.7 LM | DISK 36 HOLES D.7 LM | DISQUE 36 TROUS D. 7 LM | SCHEIBE 36 LTCHER D.7 LM | DISCO 36 ORIFICIOS D.7 LM |
| 48 | G22230306 | DISCO 12 FORI D.2,1 SP LM | DISK 12 HOLES D.2-1 SP LM | DISQUE 12 TROUS D. 2-1 SP LM | SCHEIBE 12 LTCHER D.2-1 SP LM | DISCO 12 ORIFICIOS D.2-1 SP LM |
| 49 | G22230316 | DISCO 52 FORI D.3,5 SP LM | DISC 52 HOLES D.3-5 SP LM | DISQUE 52 TROUS D. 3-5 SP LM | SCHEIBE 52 LTCHER D.3-5 SP LM | DISCO 52 ORIFICIOS D.3-5 SP LM |
| 50 | G22230317 | DISCO 36 FORI D.1,1 SP LM | DISK 36 HOLES D.1-1 SP LM | DISQUE 36 TROUS D. 1-1 SP LM | SCHEIBE 36 LTCHER D.1-1 SP LM | DISCO 36 ORIFICIOS D.1-1 SP LM |
| 51 | G22230318 | DISCO 10 FORI D.1,5 SP LM | DISK 10 HOLES D.1-5 SP LM | DISQUE 10 TROUS D. 1-5 SP LM | SCHEIBE 10 LTCHER D.1-5 SP LM | DISCO 10 ORIFICIOS D.1-5 SP LM |
| 52 | G22230319 | DISCO 20 FORI D.1,0 SP LM | DISK 20 HOLES D.1-0 SP LM | DISQUE 20 TROUS D. 1-0 SP LM | SCHEIBE 20 LTCHER D.1-0 SP LM | DISCO 20 ORIFICIOS D.1-0 SP LM |
| 53 | G22230320 | DISCO 20 FORI D.1,5 SP LM | DISK 20 HOLES D.1-5 SP LM | DISQUE 20 TROUS D. 1-5 SP LM | SCHEIBE 20 LTCHER D.1-5 SP LM | DISCO 20 ORIFICIOS D.1-5 SP LM |
| 54 | G22230321 | DISCO 52 FORI D.1,5 SP LM | DISK 52 HOLES D.1-5 SP LM | DISQUE 52 TROUS D. 1-5 SP LM | SCHEIBE 52 LTCHER D.1-5 SP LM | DISCO 52 ORIFICIOS D.1-5 SP LM |
| 55 | G22230322 | DISCO 80 FORI D.1,5 SP LM | DISK 80 HOLES D.1-5 SP LM | DISQUE 80 TROUS D. 1-5 SP LM | SCHEIBE 80 LTCHER D.1-5 SP LM | DISCO 80 ORIFICIOS D.1-5 SP LM |
| 56 | G22230323 | DISCO 100 FORI D.1,5 SP LM | DISK 100 HOLES D.1-5 SP LM | DISQUE 100 TROUS D. 1-5 SP LM | SCHEIBE 100 LTCHER D.1-5 SP LM | DISCO 100 ORIFICIOS D.1-5 SP L |
| 57 | G22230324 | DISCO 120 FORI D.1,5 SP LM | DISK 120 HOLES D.1-5 SP LM | DISQUE 120 TROUS D. 1-5 SP LM | SCHEIBE 120 LTCHER D.1-5 SP LM | DISCO 120 ORIFICIOS D.1-5 SP L |
| 58 | G22230325 | DISCO 160 FORI D.1,5 SP LM | DISK 160 HOLES D.1-5 SP LM | DISQUE 160 TROUS D. 1-5 SP LM | SCHEIBE 160 LTCHER D.1-5 SP LM | DISCO 160 ORIFICIOS D.1-5 SP L |
| 59 | G22230326 | DISCO 180 FORI D.1,5 SP LM | DISK 180 HOLES D.1-5 SP LM | DISQUE 180 TROUS D. 1-5 SP LM | SCHEIBE 180 LTCHER D.1-5 SP LM | DISCO 180 ORIFICIOS D.1-5 SP L |
| 60 | G22230327 | DISCO 20 FORI D.1,1 SP LM | DISK 20 HOLES D.1-1 SP LM | DISQUE 20 TROUS D. 1-1 SP LM | SCHEIBE 20 LTCHER D.1-1 SP LM | DISCO 20 ORIFICIOS D.1-1 SP LM |
| 61 | G22230328 | DISCO 52 FORI D.2,1 SP LM | DISK 2 HOLES D.2-1 SP LM | DISQUE 52 TROUS D. 2-1 SP LM | SCHEIBE 52 LTCHER D.2-1 SP LM | DISCO 52 ORIFICIOS D.2-1 SP LM |
| 62 | G22230332 | DISCO 13 FORI D.3,5 SP LM | DISK 13 HOLES D.3.5 SP LM | DISQUE 13 TROUS D.3-5 SP LM | SCHEIBE 13 LTCHER D.3-5 SP LM | DISCO 13 ORIFICIOS D.3-5 SP |

# TAV. 280

| Codice - Code | Descrizione - Description | Lunghezze Lengths min. | Lunghezze Lengths max. | Classe - Size (A x B) | Tipo - Type (*) | | Forcelle - Yokes (**) Z6 (1"3/8) | Z6 (1"3/4) | Z8 (32x38) | Z20 (1"3/4) | Z21 (1"3/8) |
|---|---|---|---|---|---|---|---|---|---|---|---|
| **F08011711** | CARD.B1 Z6-Z6 L700 | 700 | 1100 | B1 (22 x 54) | A | A | G58161015 | F08011772 | F08011742 | F08011758 | F08011767 |
| **F08011712** | CARD.B3 Z6-Z6 L1300 | 1300 | 2000 | B3 (27 x 70) | A | A | ——— | G58161016 | F08011743 | ——— | ——— |
| **F08011713** | CARD.B1 Z8-Z6 L700 | 700 | 1100 | B1 (22 x 54) | A | A | G58161015 | F08011772 | F08011742 | F08011758 | F08011767 |
| **F08011714** | CARD.B1 Z20-Z6 L700 | 700 | 1100 | B1 (22 x 54) | A | A | G58161015 | F08011772 | F08011742 | F08011758 | F08011767 |
| **F08011715** | CARD.B1 Z8-Z6 L900 R.LIB | 900 | 1400 | B1 (22 x 54) | A | B | G58161015 | F08011772 | F08011742 | F08011758 | F08011767 |
| **F08011716** | CARD.B1 Z6-Z6 L900 R.LIB | 900 | 1400 | B1 (22 x 54) | A | B | G58161015 | F08011772 | F08011742 | F08011758 | F08011767 |
| **F08011719** | CARD.B2 Z6-Z6 L900 | 900 | 1400 | B2 (23,8 x 61,3) | A | B | ——— | ——— | ——— | ——— | ——— |
| **F08011720** | CARD.B3 Z8-Z6 L1300 | 1300 | 2000 | B3 (27 x 70) | A | A | ——— | G58161016 | F08011743 | ——— | ——— |
| **F08011757** | CARD.B1 Z20-Z6 L900 R.L | 900 | 1400 | B1 (22 x 54) | A | B | G58161015 | F08011772 | F08011742 | F08011758 | F08011767 |
| **F08011764** | CARD.R4 Z20-Z6 L1210 OM-RL | 1210 | | R4 (27 x 74,6) | A | C | F08011768 | ——— | F08011766 | F08011774 | F08011773 |

**(*)**

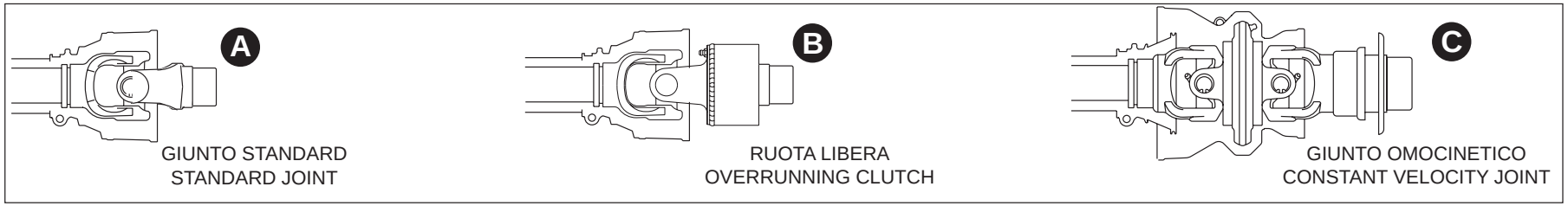


**(**)**

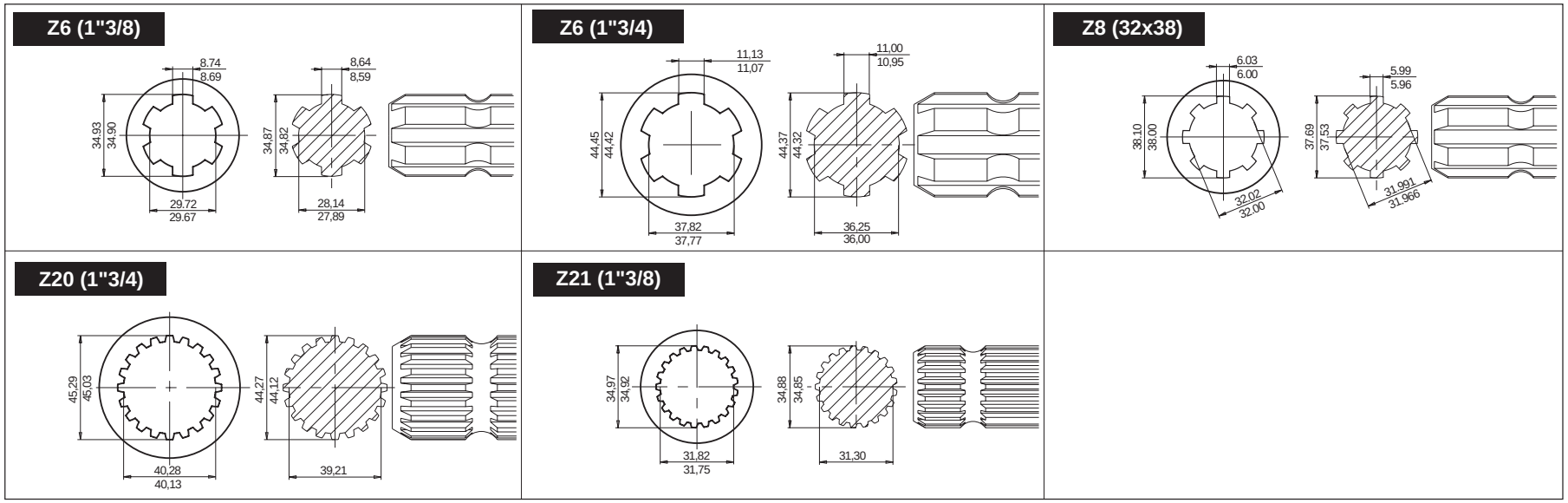




GASPARDO

## *CARDANI*

TAV. 280

| Pos. | Cod. | Descrizione | Description | Description | Benennung | Descripcion |
|---|---|---|---|---|---|---|
| | F08011711 | CARD.B1 Z6-Z6 L700 | UNIVERSAL JOINT S10 0700F 112 | CARD NORM S10 0700F1121121CAT | KARDAN S10 0700F 112 112 1CAT | CARDæN S10 0700F 112 112 1CAT |
| | F08011712 | CARD.B3 Z6-Z6 L1300 | UNIVERSAL JOINT T40 1020F 112 | CARD. T40 1020F 112 112 1 CAT | KARDAN T40 1020F 112 112 1CAT | CARDæN T40 1020F 112 112 1CAT |
| | F08011713 | CARD.B1 Z8-Z6 L700 | UNIV.JOINT B1070BA32A60 Z-8 Z- | CARD. B1070BA32A60 Z-8 Z-6 | KARDAN B1070BA32A60 Z-8 Z-6 | CARD+N B1070BA32A60 Z-8 Z-6 |
| | F08011714 | CARD.B1 Z20-Z6 L700 | | | | |
| | F08011715 | CARD.B1 Z8-Z6 L900 R.LIB | | | | |
| | F08011716 | CARD.B1 Z6-Z6 L900 R.LIB | UNIV.JOINT CE T100710 112 R12 | CARD ROUE LIBRE T100710 112R12 | KARDAN CE T100710 112 R12 | CARDAN CE T100710 112 R12 |
| | F08011719 | CARD.B2 Z6-Z6 L900 | UNIVERSAL JOINT 102 071 N T07 | CARD. 102 071 N T07 T07 1 CAT | KARDAN 102 071 N T07 T07 1CAT | CARDæN 102 071 N T07 T07 1CAT |
| | F08011720 | CARD.B3 Z8-Z6 L1300 | | | | |
| | F08011742 | FORCELLA CARD.32X38 Z8 B1 | CARDAN SHAFT FORK Z.8 | FOURCHETTE CARDAN Z.8 | GABEL KARDAN Z.8 | HORQUILLA CARDæN Z.8 |
| | F08011743 | FORCELLA CARD.32X38 Z8 B3 | | | | |
| | F08011757 | CARD.B1 Z20-Z6 L900 R.L > | | | | |
| | F08011758 | FORCELLA CARD.1"3/4 Z20 B1 > | | | | |
| | F08011764 | CARDANO OM 3/4Z20-RL Z6 L1210 | | | | |
| | F08011766 | FORCELLA CARD.32X38 Z8 R4 | | | | |
| | F08011767 | FORCELLA CARD.1 3/8 Z21 B1 > | | | | |
| | F08011768 | FORCELLA CARD.1 3/8 Z6 R4 | | | | |
| | F08011772 | FORCELLA CARD.1"3/4 Z6 B1 > | | | | |
| | F08011773 | FORCELLA CARD.1 3/8 Z21 R4 > | | | | |
| | F08011774 | FORCELLA CARD.1 3/4 Z20 R4 | | | | |
| | G58161015 | FORCELLA CARD.1'3/8 Z6 B1 | | | | |
| | G58161016 | FORCELLA CARD.1'3/8 Z6 B3 > | | | | |

# USATE SEMPRE RICAMBI ORIGINALI
# *ALWAYS USE ORIGINAL SPARE PARTS*
# IMMER DIE ORIGINAL-ERSATZTEILE VERWENDEN
# *EMPLOYEZ TOUJOURS LES PIECES DE RECHANGE ORI*GINALES
# UTILIZAR SIEMPRE REPUESTOS ORIGINALES

# GASPARDO

***Servizio Assistenza Tecnica - After Sales Service***
***Servizio Ricambi - Spare Parts Service***
***+39 0434 695410***

Agip

DEALER:

**G19530911**

*G19530911*

MASCHIO GASPARDO


**MASCHIO GASPARDO SpA**
**Sede legale e stabilimento produttivo**
Via Marcello, 73 - 35011 Campodarsego (Padova) - Italy
Tel. +39 049 9289810
Fax +39 049 9289900
Email: info@maschio.com
www.maschionet.com

**MASCHIO DEUTSCHLAND GMBH**
Äußere Nürmberger Straße 5
D - 91177 Thalmässing
Deutschland
Tel. +49 (0) 9173 79000
Fax +49 (0) 9173 790079

**MASCHIO FRANCE Sarl**
1, Rue de Mérignan ZA
F - 45240 La Ferte St. Aubin
France
Tel. +33 (0) 2.38.64.12.12
Fax +33 (0) 2.38.64.66.79

**MASCHIO IBERICA S.L.**
Calle Cabernet, 10
Poligono Industrial Clot de Moja
Olerdola - 08734 Barcelona
Tel. +34 93.81.99.058
Fax +34 93.81.99.059

**MASCHIO-GASPARDO USA Inc**
120 North Scott Park Road
Eldridge, IA 52748 - USA
Ph. +1 563 2859937
Fax +1 563 2859938
e-mail: info@maschio.us

**MASCHIO GASPARDO SpA**
**Stabilimento produttivo**
Via Mussons, 7 - 33075
Morsano al Tagliamento (PN) - Italy
Tel. +39 0434 695410
Fax +39 0434 695425
Email: info@gaspardo.it

**000 МАСКИО-ГАСПАРДО РУССИЯ**
Улица Пушкина, 117 Б
404126 Волжский
Волгоградская область
Тел. +7 8443 525065
факс. +7 8443 525064

**MASCHIO-GASPARDO ROMANIA S.R.L.**
Strada Înfrátirii, F.N.
315100 Chisineu-Cris (Arad) -România
Tel. +40 257 307030
Fax +40 257 307040
e-mail: maschio@maschio.ro

**MASCHIO MIDDLE EAST**
P.O. Box 922388
Amman, 11192 Jordan
Tel. 962 605511384
Fax 962 6 5538398
e-mail: tahaeng@nets.com.jo

**GASPARDO-MASCHIO TURCHIA**
**MASCHIO-GASPARDO CANADA Inc**
**MASCHIO-GASPARDO CINA**
**MASCHIO-GASPARDO POLAND**
**MASCHIO-GASPARDO UCRAINA**
**GASPARDO BIELORUSSIA**
**MASCHIO-GASPARDO KOREA**