LIQUID SPRAYERS

PARTS CATALOG

CHALLENGER

4460 / 4660 SPRAYER (AUTO TRANS) (EFF S/N ..Txx1001)

518482D1 A

August 2007

How to use this Parts Book

Parts Ordering Guide:

1. Give the Serial Number of your Chassis or System when ordering.
2. Use the part number and description when ordering parts.
3. Give the Assembly Title if needed.
4. Give the P/N number and date for the Parts Book if needed.

Parts List Abbreviations

NSS	Not Sold Separately
AR	As Required, usually for a lubricant or adhesive
REF	Reference - Part called out on a different page.
NS	Not shown in illustration
R/B	Replaced by another number
ASM	assembly page

Notice:

Every effort has been made to ensure the accuracy of the information in this book. However, because of design changes that can occur since this book was published, it is possible that some illustrations and part numbers can be different than on your machine. The technical information in this book was correct at the time this book was approved for publication.

FUEL TANK AND TOOL BOX INSTL

ITEM	PART #	QTY	DESCRIPTION	COMMENTS
1	AG109742	4	MATTING-RUBBER,2.00X44.50X.12	
2	AG109754	4	MATTING-RUBBER,2.00X46.00X.12	
3	AG120558	1	TUBE WLDMT-FUEL LINE	
4	AG122229	1	BRKT,STIFFNER,HAT SECTION	
5	AG122302	1	BRKT-AUX BAT POST	
6	AG125208	1	SHIELD-EXHAUST	
7	AG125210	4	STRAP WLDMT-FUEL TANK	
8	AG126403	4	BOLT-.31-18X2.75 G5 CRG ZN/Y	
9	AG130111	1	PLATE,MTG-FUEL TUBE	
10	AG130414	4	TUBE-RD,.75ODX.12WALL X 2.00LG	
11	AG262729	2	PLATE-SLOT SEALING	
12	AG325049	1	CABINET ASM-TOOL BOX,LH	SEE PAGE 4-2
13	AG325050	1	CABINET ASM-TOOL BOX,RH	SEE PAGE 4-3
14	AG504815	1	TANK-FUEL,65GL,POLY,RH	[A]
15	AG504816	1	TANK-FUEL,65GL,POLY,LH	[B]
16	AG510939	-	HOSE HYD 0.37 BULK 250PSI WP [BULK: 5 FT]	
17	AG512346	-	3M 1300 YELLOW ADHESIVE (GAL) [BULK: 0.001 GL]	
18	AG512885	AR	LOCTITE ADHESIVE SEALANT BLUE	
19	AG518292	2	BOLT-U .31-18X2.00X 2.69 RD SS	
20	AG519556	1	SENDING UNIT FUEL LEVEL	
21	AG522183	-	HOSE-FUEL,2.00 ID [BULK: 2.5 FT]	
22	AG522439	8	BOLT-.38-16X1.5,G5,ZN,CRG	
23	AG522453	2	VENT-FUEL,90D,.50MNPTX.38HOSEB	
24	AG523919	8	CLAMP-HIGH TORQUE,3.00	
25	AG550124	2	NUT 0.50-13NC HEX ZN REG	
26	AG550205	4	WASHER LK 0.31 ZN REG	
27	AG550213	4	NUT 0.31-18NC HEX ZN REG	
28	AG550256	2	BOLT.50-13NCX1.25 G5 ZN HHD	
29	AG550264	2	WASHER 0.50 LK ZN REG	
30	AG550353	10	WASHER 0.50 FL ZN REG TYPE-B	
31	AG551007	8	WASHER FL 0.37 ZN REG TYPE-B	
32	AG551015	4	WASHER 0.31 FL ZN REG TYPE-B	
33	AG551201	1	ADAP STR .37MNPT X .37MJIC (N)	
34	AG552461	1	ADAP STR 0.50MNPT X 0.50MJIC	
35	AG561025	2	CLAMP HOSE .218 TO .625 U5S	
36	AG561867	2	PLUG PIPE 0.25-18 EXT HEX HD	
37	AG601152	8	NUT 0.50-13NC HEX ZN REG NY	
38	AG601411	8	NUT 0.37-16NC HEX ZN REG LK NY	
39	AG601888	4	NUT 0.31-18NC HEX ZN REG NY	
	FOOTNOTE [A]		FOR REPLACEMENT CAP USE AG055178	
	FOOTNOTE [B]		FOR REPLACEMENT CAP USE AG055178	

Assembly Title, refer to Table of Contents

Assembly Reference, see referenced page

Footnote Reference, see notes below.

Footnote Reference

Footnote description

Assembly Page #, refer to Table of Contents

Part Book Section, refer to Table of Contents

Part Book Title, refer to Part Book Cover

Copyright © 2003 AGCO Corporation

1 - 3 | 9 (CHECK LETTER) | 14 - 17

MACHINE SEQUENCE NUMBER:
SEQUENCE NUMBER WILL START OVER AT THE BEGINNING OF EACH MODEL YEAR. THE FIRST MACHINE OF EACH MODEL YEAR WILL BE SEQUENCED 1001.

4 | 5 - 8 | 10 | 11 | 12 | 13

1 - 3	
WORLD MANUFACTURER CODE:	
AGC	AGCO

4	
BRAND CODE:	
A	AG-CHEM
C	CHALLENGER
L	LORAL
S	SPRA-COUPE
W	WILLMAR

5 - 8	
MODEL NUMBER:	
0874	AG-CHEM
1074	
1070	
1274	
6103	
1206	
6203	
8203	
8204	
8244	
9203	
9103	
9203	
3104	
3244	
9055	
9556	
6300	LORAL
6400	

5 - 8	
MODEL NUMBER:	
5150	WILLMAR
5200	
5500	
5600	
5800	
1600	
1655	
2455	
0107	
4550	
8500	
3450	CHALLENGER
3650	
4450	
4455	
4460	
4650	
4655	
4660	
7450	
7650	
7655	
7460	
7660	
0410	
0610	
0735	
0745	
0755	
0765	
0835	
0845	
0855	
0865	
0875	
0945	
0955	
0965	
0975	
2244	SPRA-COUPE
3244	

10	
LOCATION BUILT CODE:	
N	JACKSON
Q	GRUBBENVORST

11	
MODEL YEAR CODE:	
P	2005
R	2006
S	2007
T	2008
U	2009
Y	2010
W	2011
X	2012

12		
OPTION CODE:		
0	NO CODE	AG-CHEM, LORAL (WILLMAR)
B	BOLT-ON HOPPER	
7	NARROW AXLE	SPRA-COUPE & CHALLENGER SPRAYER
8	WIDE AXLE	
I	EXTRA WIDE AXLE	
E	ESP	
P	POLY TANK	AG-CHEM (65/75C ONLY)
S	STAINLESS TANK	
N	NEW LEADER	
A	745	CHALLENGER TRACTOR
B	755	
C	765	
G	835	
H	845	
J	855	
K	865	
L	875	
R	945	
S	955	
T	965	
U	975	

13		
OPTION CODE:		
0	NO CODE	AG-CHEM, LORAL, WILLMAR
A	AUTOMATIC XSHN	SPRA-COUPE & CHALLENGER SPRAYER
M	MANUAL XSHN	
P	POWERSHIFT XSHN	
S	ESP	
G	800 GALLON	AG-CHEM (65/75C ONLY)
I	1000 GALLON	
L	NEW LEADER	
A	EAME AG	CHALLENGER TRACTOR
B	EAME SCRAPER	
C	R.O.S. AG NARROW (MT700 ONLY)	
D	R.O.S. AG WIDE (MT700 ONLY)	
E	R.O.S. AG ULTRA-WIDE (MT700 ONLY)	
F	R.O.S. SCRAPER (MT800 & MT900)	
G	R.O.S. AG (MT800 & MT900)	

ENGINE GROUP	1
TRANSMISSION GROUP	2
DRIVELINE GROUP	3
FRAME AND SUSPENSION GROUP	4
AXLE AND STEERING GROUP	5
FUEL SYSTEM GROUP	6
HYDRAULIC GROUP	7
CAB GROUP	8
AIR CONDITIONING AND HEATING GROUP	9
ELECTRICAL GROUP	10
LIGHTING GROUP	11
APPEARANCE GROUP	12
TIRE AND WHEEL GROUP	13
DECAL GROUP	14
GUIDANCE GROUP	15
TANK AND SADDLE GROUP	16
PRODUCT PUMP AND PRESSURE PLUMBING GROUP	17
BOOM GROUP	18
BOOM PLUMBING GROUP	19
CONTROLLER GROUP	20
FOAM MARKER GROUP	21
OPTIONS GROUP	22

COOLING INSTL	1-1
COOLING INSTL	1-2
COOLING PKG ASM	1-3
SHIFT GRP-ALLISON	1-4
SHIFTER ASM-ALLISON	1-5
AIR CLEANER INSTL	1-6
FILTER-AIR	1-7
TANK-DEARATING	1-8
ENGINE SUPPORT INSTL-AT	1-9
ARM ASSY-PULLEY	1-10
EXHAUST INSTLL-4450AT AND 4650AT	1-11
ENGINE INSTL-C4.4 CAT TIER3 AT	1-12
ENGINE INSTL-C4.4 CAT TIER3 AT	1-13

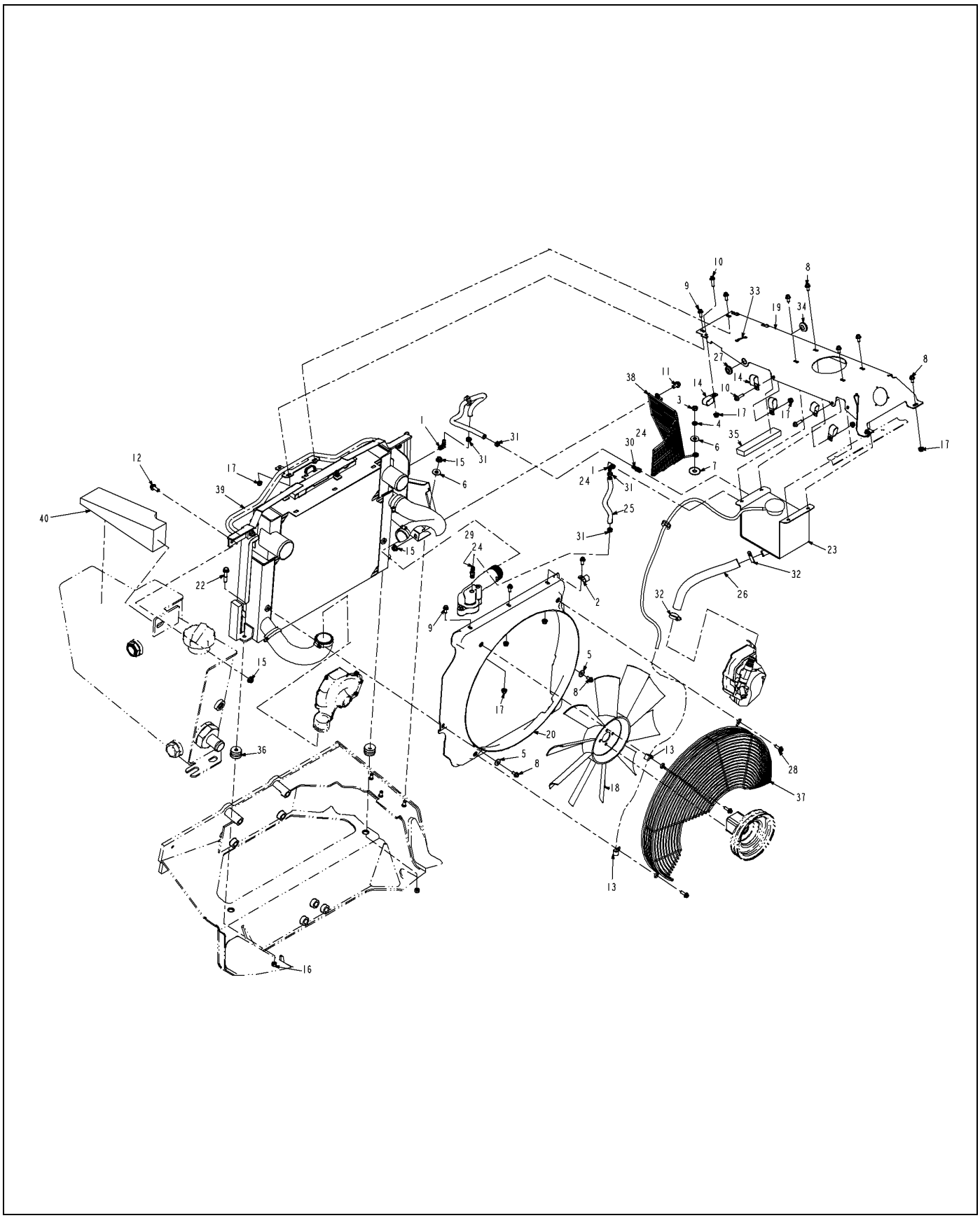

509531D1-01-N965-01.TIF

Copyright © 2007 AGCO Corporation

ITEM	PART #	QTY	DESCRIPTION	COMMENTS
1	WR35119	2	ELBOW-BRASS 90,-06HB/	
2	WR50830	1	CLAMP-SUPPORT,CUSHION,	
3	WR50838	1	NUT-HEX,METRIC M10-1.5	
4	WR55106	1	WASHER-LOCK SPRING,10 MM	
5	WR55157	2	WASHER-FLAT,8MM ID,	
6	WR55158	4	WASHER-FLAT,10MM ID,	
7	WR55159	1	WASHER-FLAT,12MM ID,	
8	WR55205	8	SCREW-HEX FLG,M8X1.25X16 CL8.8	
9	WR55206	5	SCREW-HEX FLG,M8X1.25X20 CL8.8	
10	WR55208	3	SCREW-HEX FLG,M8X1.25X30 CL8.8	
11	WR55214	1	SCREW-HEX FLG,M10X1.5X20 CL8.8	
12	WR55215	1	SCREW-HEX FLG,M10X1.5X25 CL8.8	
13	WR55229	2	CLAMP-SUPPORT CUSHION,	
14	WR55247	5	CLAMP-SUPPORT CUSHION DBL	
15	WR55301	5	NUT-FLANGE,M10 X 1.5,PREV	
16	WR55353	2	NUT-TOPLOCK, 3/8-16UNC G8	
17	WR55410	10	NUT-FLANGE,M8 X 1.25 CL8,	
18	WR121502	1	FAN-COOLING	
19	WR124049	1	SUPPORT-ENGINE COVER	
20	WR124934	1	SHROUD, FAN	
22	WR128547	2	SCREW-FLG HD .375X16X2	
23	WR128841	1	TANK-DEARATING	SEE PAGE 1-8
24	AG129187	AR	PIPE SEALANT-FLEX BLACK	
25	AG510939	-	HOSE HYD 0.37 BULK 250PSI WP [BULK: 75.834 FT]	
26	AG513385	-	HOSE,MED.PRESS 0.75 2BRD EPDM [BULK: 25.417 FT]	
27	AG514385	1	GROMMET .63 ID .88 GROOVE DIA	
28	AG520967	3	BOLT-M8-1.25X25,CL8.8,ZN FLG	
29	AG521351	1	HOSE BARB 0.25NPTX.38HOSEW/ORF	
30	AG559415	1	ADAPTER -4MNPT X -6HB	
31	AG561025	4	CLAMP HOSE .218 TO .625 U5S	
32	AG561229	2	CLAMP 0.68-1.25 HOSE 12HS	
33	AG562496	AR	TIE CABLE 15.0 .18-4.00 BLACK	
34	WR742876	1	GROMMET	
35	6565114	-	STRIP-FOAM,BULK [BULK: 15.917 FT]	
36	6653763	2	MOUNT ASSY	
37	513767D1	1	SHIELD-FAN	
38	513768D1	1	SHIELD-FAN, SIDE	
39	519935D1	1	COOLING PKG ASM	SEE PAGE 1-3
40	520093D1	1	BARRER, RECIRC, TOP	

Copyright © 2007 AGCO Corporation

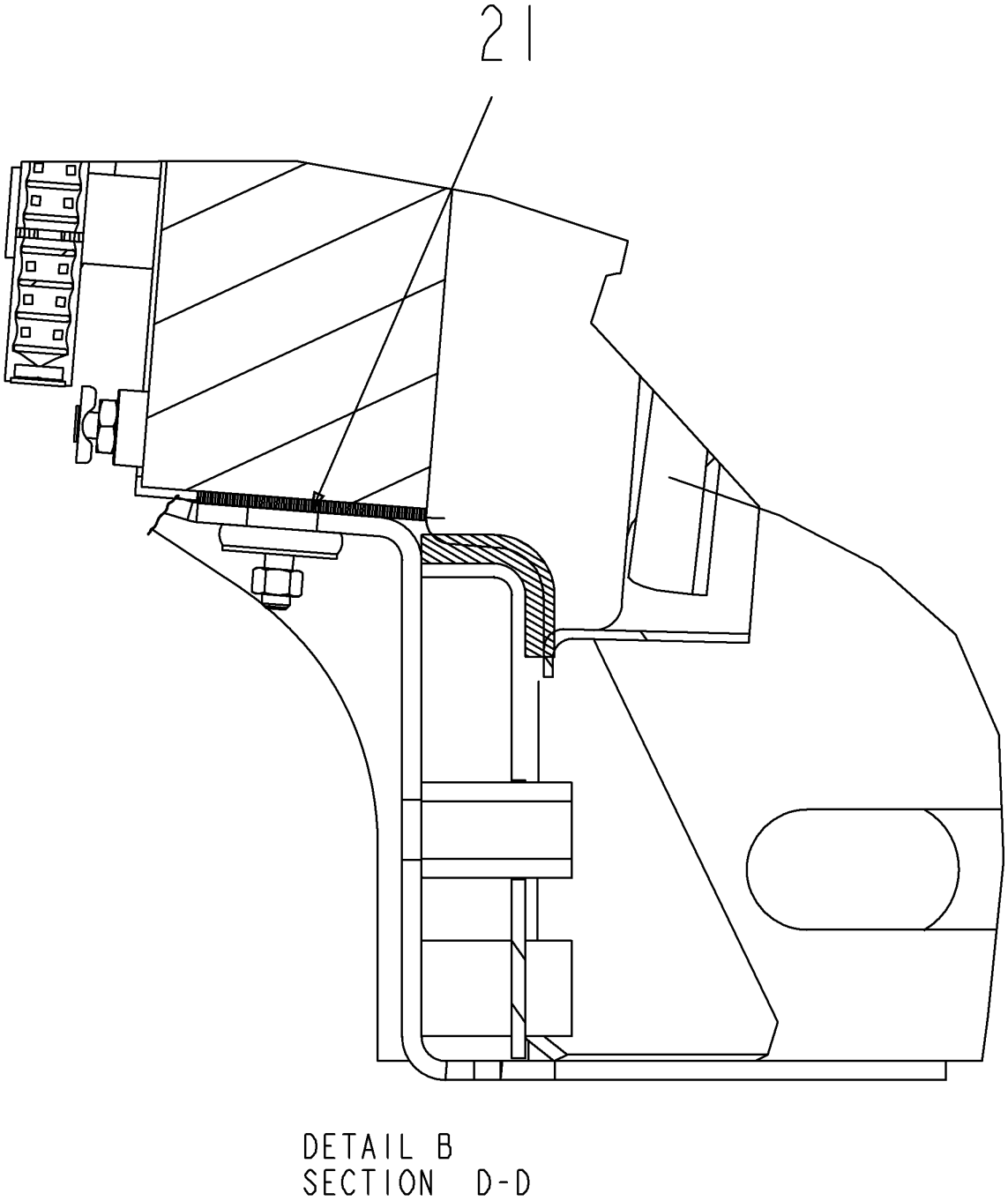

509531D1-01-N965-02.TIF

Copyright © 2007 AGCO Corporation

ITEM	PART #	QTY	DESCRIPTION	COMMENTS
21	WR125404	2	INSULATION	

Copyright © 2007 AGCO Corporation

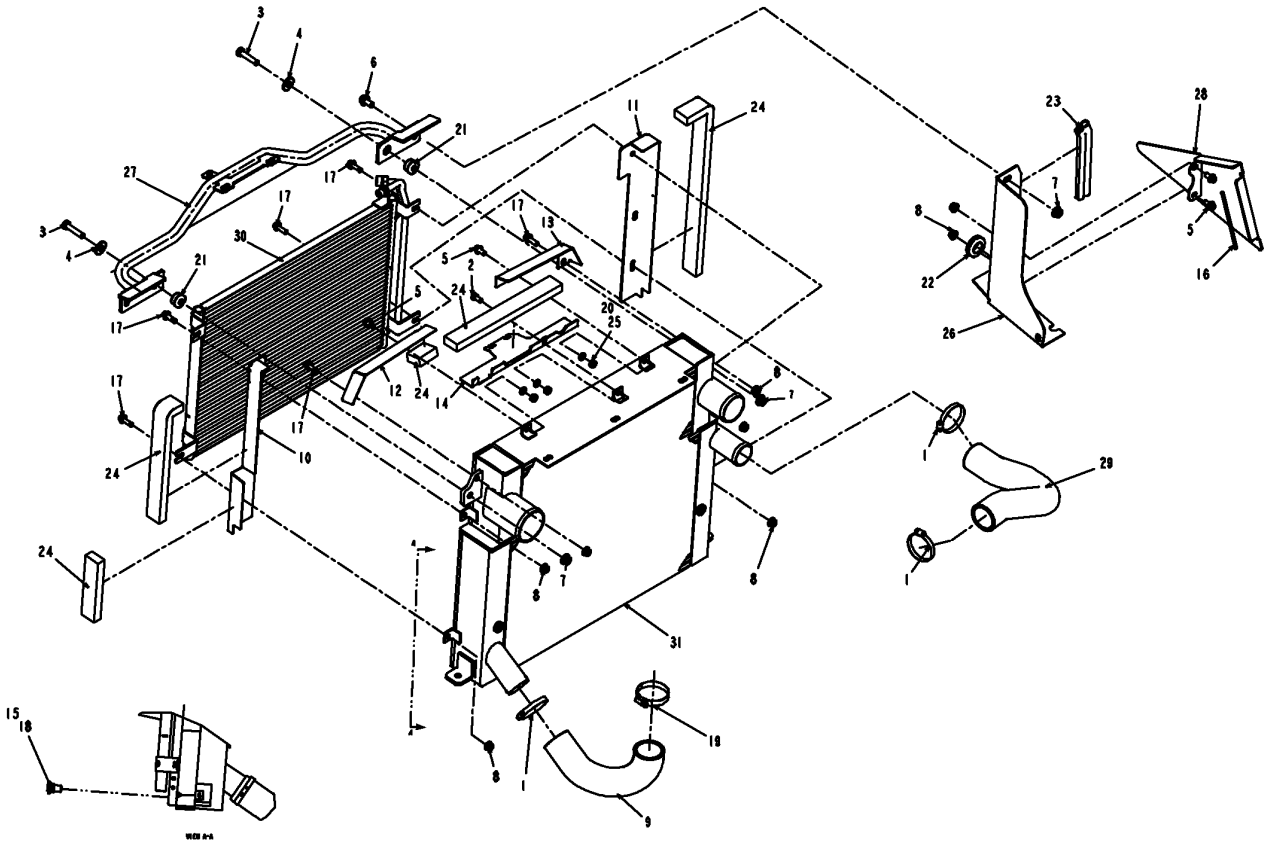

519935D1-01-N965-.TIF

Copyright © 2007 AGCO Corporation

COOLING PKG ASM

ITEM	PART #	QTY	DESCRIPTION	COMMENTS
1	WR10857	3	CLAMP-HOSE,2 1/2 SST,	
2	WR25752	1	SCREW-CAP HEX M8 X 16,	
3	WR55048	2	SCREW-CAP HEX M10 X 45	
4	WR55158	2	WASHER-FLAT,10MM ID,	
5	WR55205	4	SCREW-HEX FLG,M8X1.25X16 CL8.8	
6	WR55214	1	SCREW-HEX FLG,M10X1.5X20 CL8.8	
7	WR55301	3	NUT-FLANGE,M10 X 1.5,PREV	
8	WR55410	8	NUT-FLANGE,M8 X 1.25 CL8,	
9	WR124563	1	HOSE-RADIATOR OUT	
10	WR125351	1	MOUNT-CONDENSOR,LH	
11	WR125352	1	MOUNT-CONDENSOR,RH	
12	WR125353	1	BRACKET-RADIATOR LH	
13	WR125354	1	BRACKET-RADIATOR, RH	
14	WR125408	1	MOUNT-INSULATION	
15	AG129187	AR	PIPE SEALANT-FLEX BLACK	
16	AG513653	-	EDGE LINER .07-.12 TK MAT POLY [BULK: 11.084 FT]	
17	AG520967	6	BOLT-M8-1.25X25,CL8.8,ZN FLG	
18	AG553158	1	VALVE DRAIN COCK BR .25 18NPTF	
19	AG561233	1	CLAMP-HOSE,1.81X2.75,36HS	
20	AG561679	3	WASHER LOCK M8 ZN	
21	WR568276	2	MOUNT-VIBRATION	
22	WR731972	1	GROMMET	
23	6513152	-	SEAL [BULK: 21.167 FT]	
24	6565114	-	STRIP-FOAM,BULK [BULK: 115.917 FT]	
25	400340X1	3	NUT-M8X1.25X13 HEX ZND1	
26	505605D1	1	BRACE	
27	506009D1	1	MOUNT WLDMT-RADIATOR	
28	511768D1	1	COVER PLATE WLDMT	
29	513111D1	1	HOSE-RADIATOR INLET	
30	518798D1	1	A/C CONDENSER, ATLAS	
31	519382D1	1	RADIATOR CAC ASM TIER 3	

Copyright © 2007 AGCO Corporation

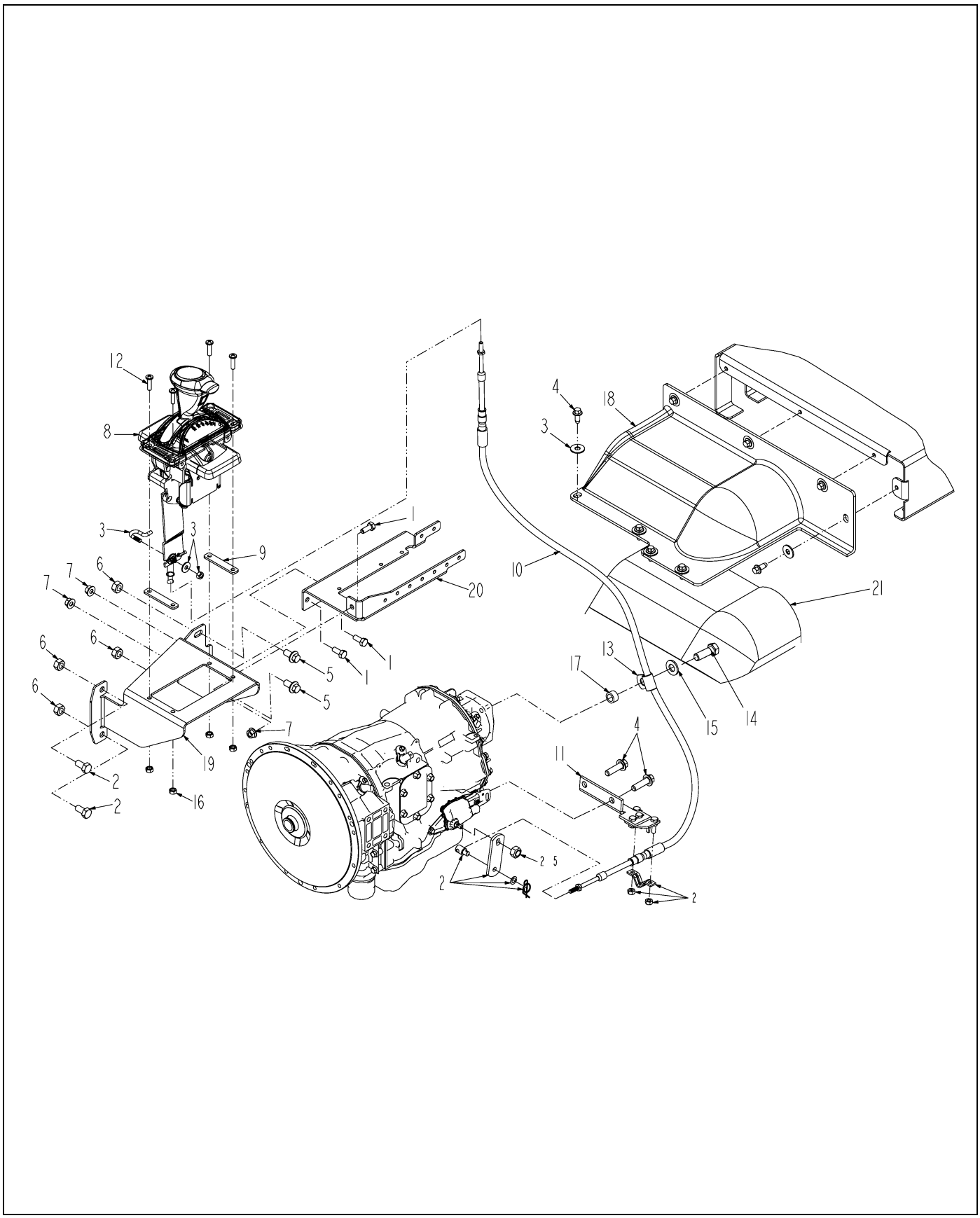

129416-03-K961-01.TIF

Copyright © 2007 AGCO Corporation

ITEM	PART #	QTY	DESCRIPTION	COMMENTS
1	WR55035	3	SCREW-CAP HEX M8 X 20	
2	WR55046	2	SCREW-CAP HEX M10 X R/B 562463	
3	WR55157	8	WASHER-FLAT,8MM ID,	
4	WR55190	8	SCREW-CAP HEX M8 X 20,	
5	WR55214	2	SCREW-HEX FLG,M10X1.5X20 CL8.8	
6	WR55312	4	NUT-LOCK HEX,M10 X 1.5,	
7	WR55410	3	NUT-FLANGE,M8 X 1.25 CL8,	
8	WR129417	1	SHIFTER ASM-ALLISON	SEE PAGE 1-5
9	WR129418	2	SPACER SHIFTER	
10	WR129419	1	CABLE,ALLISON SHIFT	
11	WR129435	1	KIT-SHIFT CONNECTOR, TRANS	
12	WR133993	4	SCREW-MACHINE .25-20 X 1 YZ	
13	AG514777	1	CLAMP 0.50 COATED HOSE	
14	AG550817	1	BOLT 0.50-13NCX 1.50 G5 ZN HHD	
15	AG561617	1	WASHER 0.50 FL ZN SAE TYPE-A	
16	AG604216	4	NUT 0.25-20NC HEX ZN REG NY	
17	6503451	1	SPACER	
18	6801239	1	COVER	
19	6802660	1	BRACKET-SHIFTER	
20	6802662	1	BRACKET-FUSE	
21	508547D1	1	PANEL, CAB LINKAGE HOUSING	

Copyright © 2007 AGCO Corporation

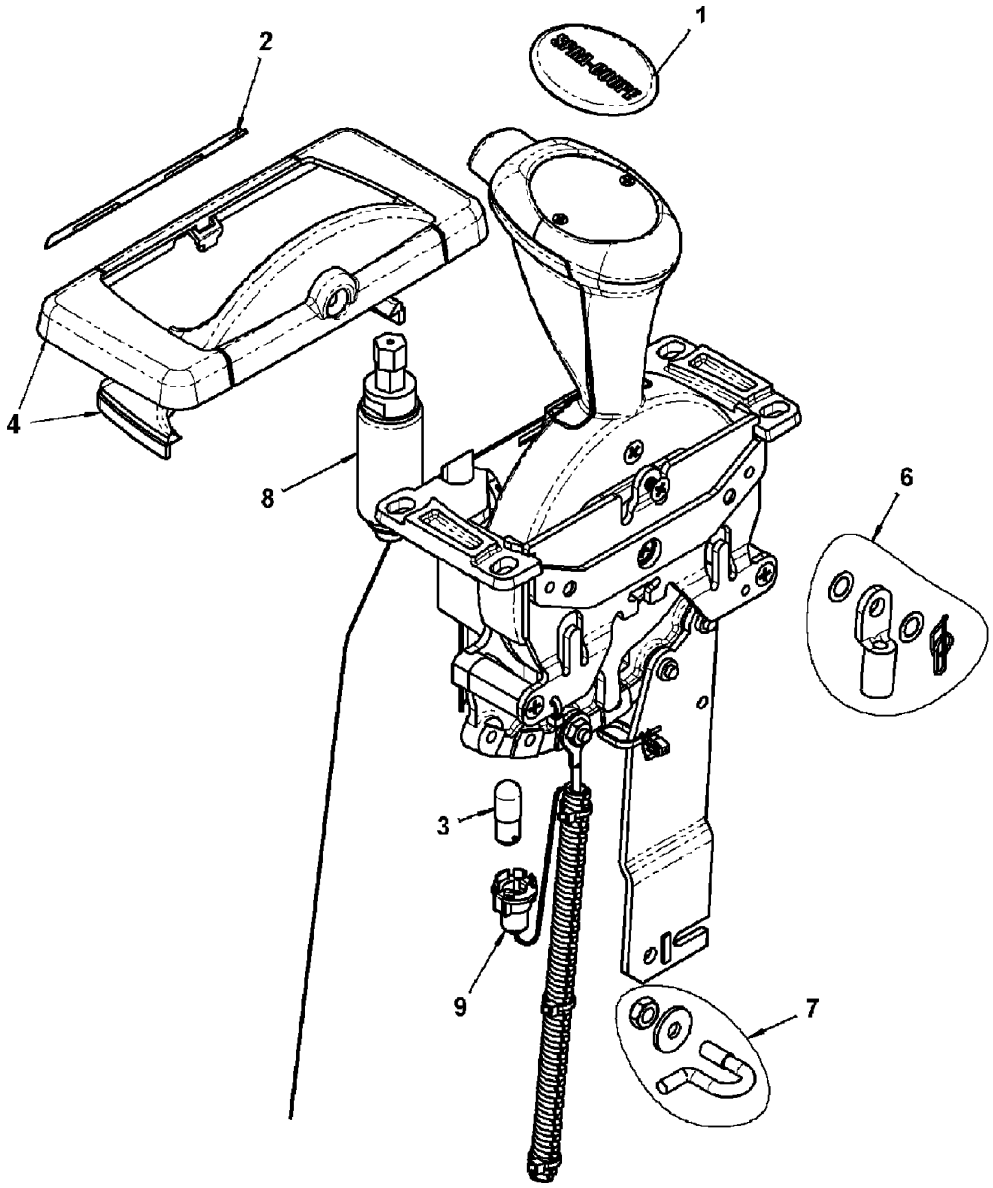

129417.TIF

Copyright © 2007 AGCO Corporation

SHIFTER ASM-ALLISON

ITEM	PART #	QTY	DESCRIPTION	COMMENTS
REF	AG331177	1	SWITCH/OVERDRIVE	
1	WR139459	1	CAP,T75	
2	WR139458	1	LENS	
3	WR139457	1	LAMP	
4	WR139456	1	KIT/FACE PLATE,T75	
5	WR139455	1	KIT/CONNECTOR,T75	
6	WR139454	1	KIT/SWIVEL 1/4-28	
7	WR139453	1	KIT/CABLE CLAMP	
8	WR139452	1	KIT/SOLENOID	
9	WR139451	1	SOCKET/LIGHT ASM	

Copyright © 2007 AGCO Corporation

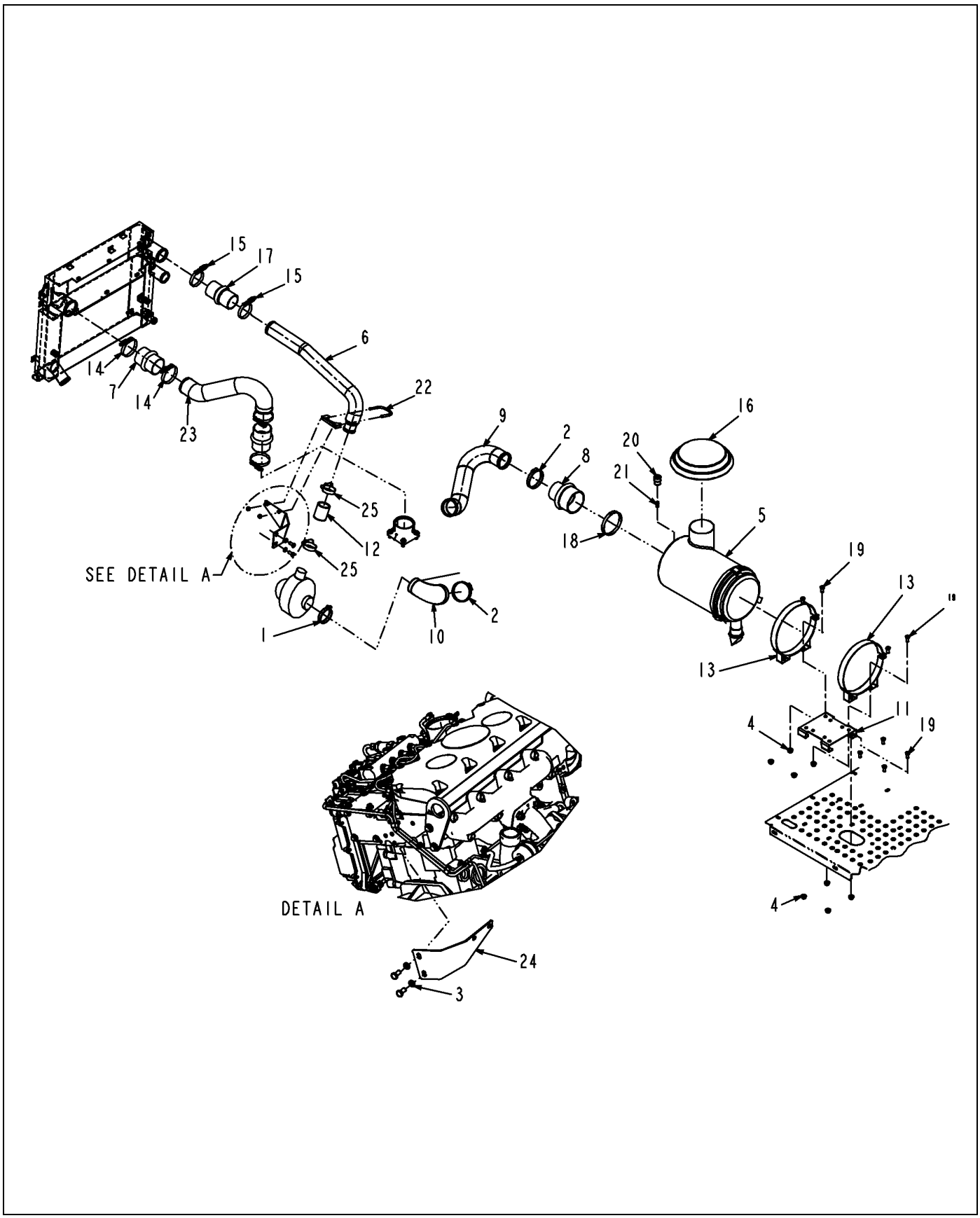

509527D1-02-R512-.TIF

Copyright © 2007 AGCO Corporation

AIR CLEANER INSTL

ITEM	PART #	QTY	DESCRIPTION	COMMENTS
1	WR10859	1	CLAMP-HOSE,3 SST,	
2	WR10861	2	CLAMP-HOSE,3 1/2 SST,	
3	WR55106	2	WASHER-LOCK SPRING,10 MM	
4	WR55301	8	NUT-FLANGE,M10 X 1.5,PREV	
5	WR121510	1	FILTER-AIR	SEE PAGE 1-7
6	WR121514	1	TUBE-CAC,OUT	
7	AG121551	2	HUMP HOSE,3 X 4.38	
8	WR121880	1	HOSE,HUMP 4 X 3	
9	WR124126	1	TUBE-AIR CLEANER	
10	WR124127	1	HOSE, AIR CLEANER	
11	WR124224	1	MOUNT-AIR CLEANER	
12	WR124381	1	HOSE-CAC,2 IN	
13	AG516795	2	BAND ASM-AIR CLEANER 10 IN DIA	
14	AG519741	4	CLAMP-HOSE 2.75 DIA	
15	AG519871	2	CLAMP-HOSE 2.25 DIA	
16	AG520679	1	HOOD-INLET,4.50 DIA	
17	WR523809	1	HOSE-HUMP,2.50X5.50	
18	AG561237	1	CLAMP 3.56-4.50 HOSE 64HS	
19	AG562463	10	BOLT M10-1.50X 20MM G8.8 ZN HH	
20	AG600857	1	INDICATOR SERVICE (25 H20) (P)	
21	AG602523	1	FITTING-SAFETY	
22	6595786	1	CLAMP-FULL CIRCLE	
23	513047D1	1	TUBE-CAC OUTLET	
24	520090D1	1	BRACKET-CAC,TUBE	
25	CH8T-6703	2	CLAMP-HOSE 45-67X16 CONST LD	

Copyright © 2007 AGCO Corporation

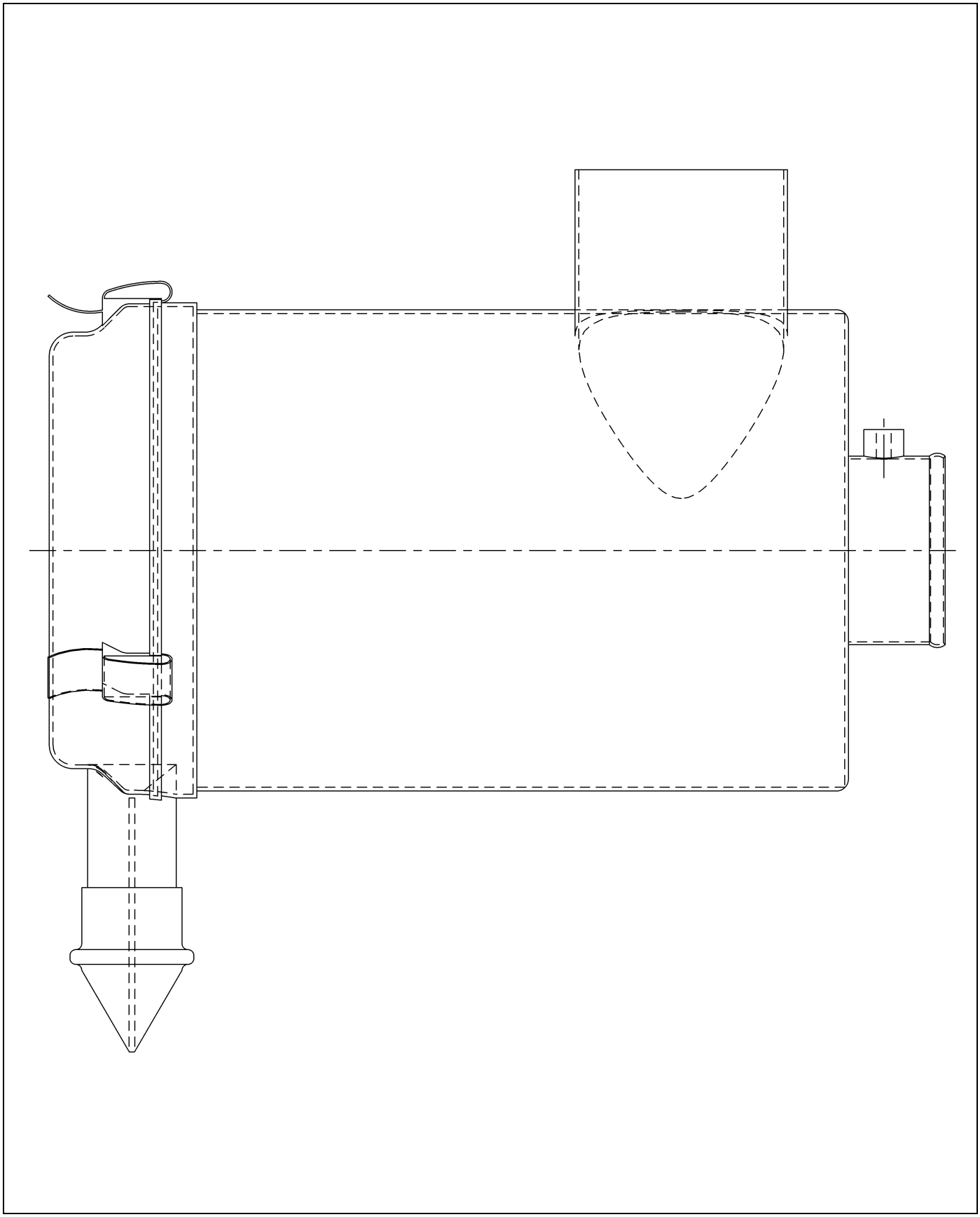

121510.TIF

Copyright © 2007 AGCO Corporation

ITEM	PART #	QTY	DESCRIPTION	COMMENTS
REF	700716416	-	ORING/COVER GASKET	

Copyright © 2007 AGCO Corporation

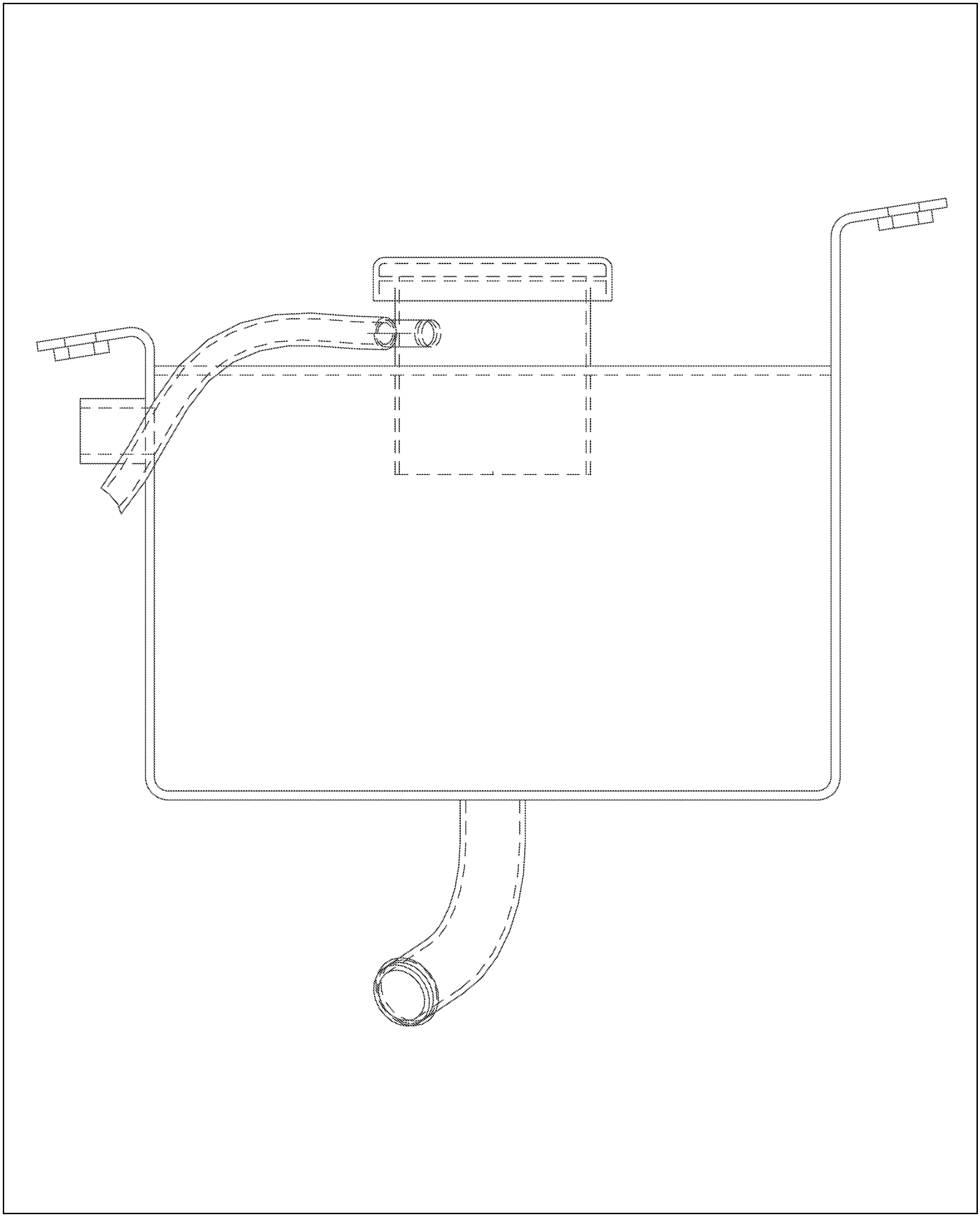

128841-A-L520-.TIF

Copyright © 2007 AGCO Corporation

ITEM	PART #	QTY	DESCRIPTION	COMMENTS
REF	WR330191	1	CAP/RAD. MED.	

Copyright © 2007 AGCO Corporation

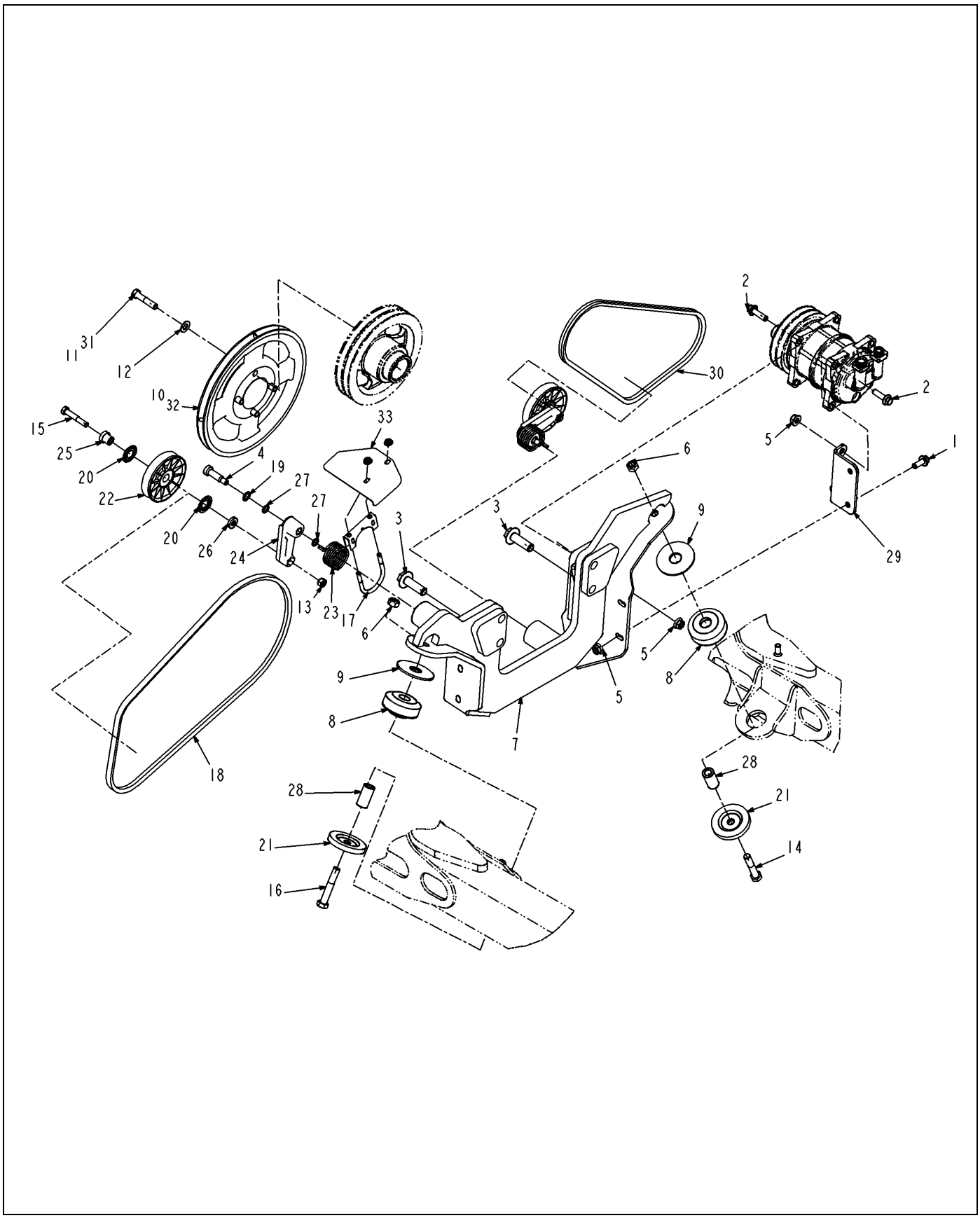

515775D1-02-R320-.TIF

Copyright © 2007 AGCO Corporation

ENGINE SUPPORT INSTL-AT

ITEM	PART #	QTY	DESCRIPTION	COMMENTS
1	WR55215	2	SCREW-HEX FLG,M10X1.5X25 CL8.8	
2	WR55217	4	SCREW-HEX FLG,M10X1.5Z35 CL8.8	
3	WR55222	4	SCREW-HEX FLG,M16X2X50 CL8.8	
4	WR55268	2	SCREW-SH HEX 3/8 NC X	
5	WR55301	6	NUT-FLANGE,M10 X 1.5,PREV	
6	WR55354	2	NUT-TOPLOCK, 1/2-13UNC G8	
7	WR120882	1	MOUNT-W/A	
8	WR129611	2	MOUNT-ENGINE	
9	WR129776	2	SPACER-ENGINE MOUNT	
10	AG511099	AR	GREASE-MULTI PURPOSE LITH.	
11	AG512885	AR	LOCTITE ADHESIVE SEALANT BLUE	
12	AG515782	4	WASHER 0.43 FL ZN SAE TYP-A G8	
13	AG550825	2	NUT 0.37-16NC HEX ZN REG	
14	AG551392	1	BOLT 0.50-13NCX 2.75 G5 ZN HHD	
15	AG552127	2	BOLT 0.37-16NCX 2.25 G5 ZN HHD	
16	AG556103	1	BOLT 0.50-13NCX 3.00 G5 ZN HHD	
17	WR657904	1	CLAMP-CIRCLE,FULL	
18	6627918	1	BELT-PUMP,SPRAY	
19	6655781	2	BEARING-THRUST	
20	6660995	4	RING-GREASE	
21	6661787	2	WASHER-SNUBBING	
22	6662997	2	PULLEY-IDLER	
23	6700722	2	SPRING-TORSION	
24	6703507	2	ARM ASSY-PULLEY	SEE PAGE 1-10
25	6704443	2	BUSHING-SPACER	
26	6704444	2	WASHER-COUNTRBORED	
27	6704820	4	O RING-METRIC	
28	6706043	2	TUBE-SPACER	
29	6800795	1	BRACE, A/C MOUNT	
30	6801631	1	BELT-COMPRESSOR,A/C	
31	377561X1	4	BOLT-7/16-20X2.00 GR8 PH&O HHD	
32	514877D1	1	PULLEY-ANODIZED ALUMINUM	
33	515777D1	1	GUARD- BELT, 4 X 60	

Copyright © 2007 AGCO Corporation

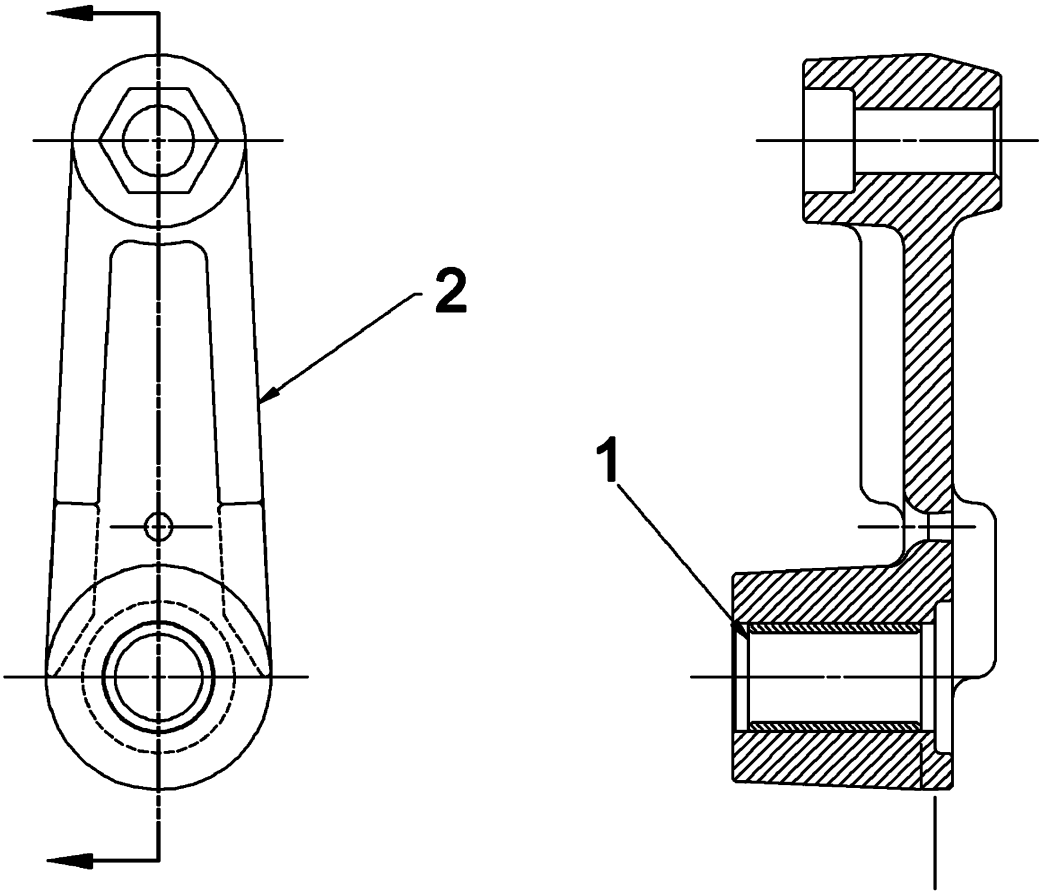

6703507.TIF

Copyright © 2007 AGCO Corporation

ARM ASSY-PULLEY

ITEM	PART #	QTY	DESCRIPTION	COMMENTS
1	6670682	1	SLEEVE-BEARING	
2	6703506	1	ARM-PULLEY	

Copyright © 2007 AGCO Corporation

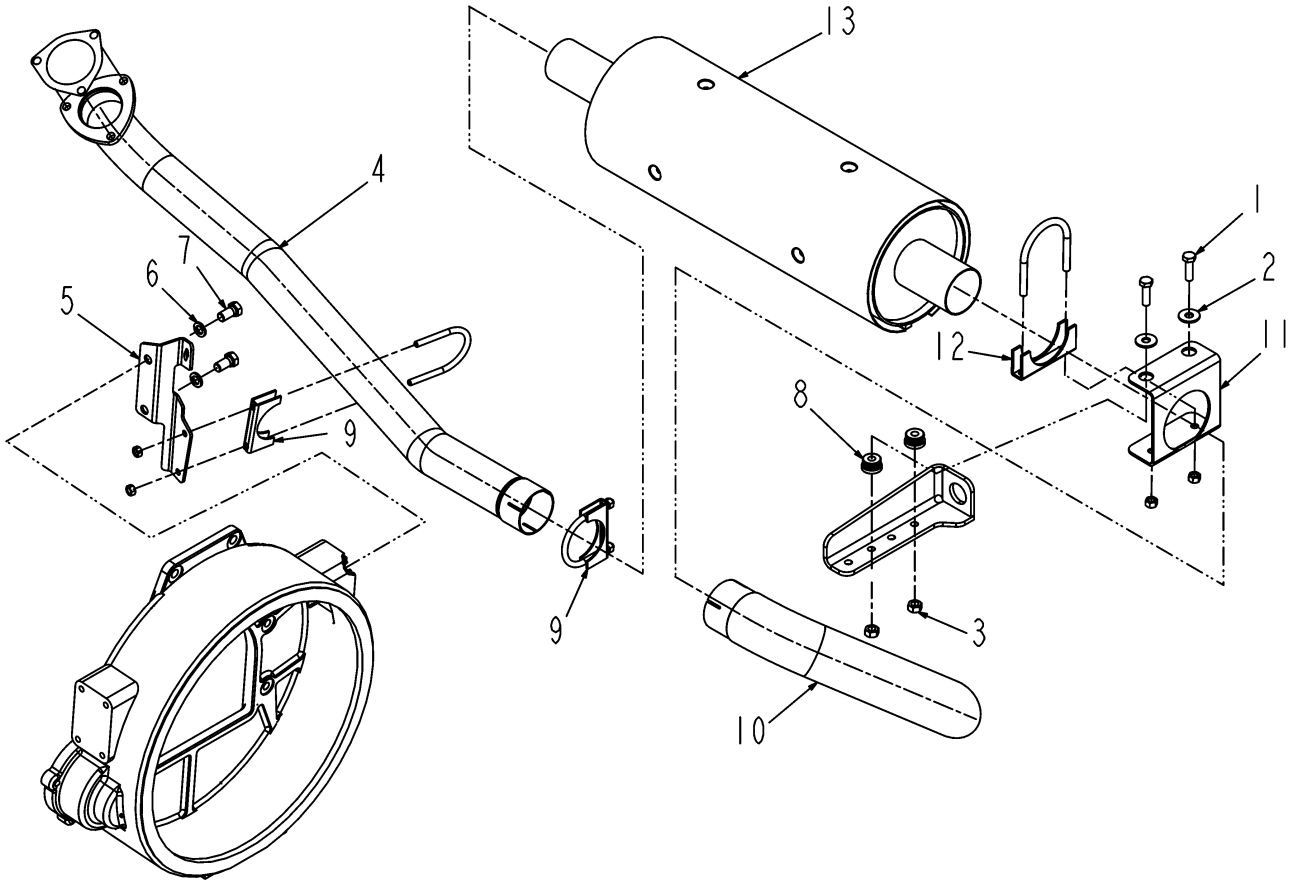

129480-B-1.TIF

Copyright © 2007 AGCO Corporation

EXHAUST INSTLL-4450AT AND 4650AT

ITEM	PART #	QTY	DESCRIPTION	COMMENTS
REF	6668623	-	JOINT	
1	AG029298	2	BOLT M10-1.50X 35MM G8.8 ZN HH	
2	WR55158	8	WASHER-FLAT,10MM ID,	
3	WR55312	2	NUT-LOCK HEX,M10 X 1.5,	
4	WR129481	1	PIPE-EXHAUST	
5	WR129482	1	BRACE-EXHAUST PIPE	
6	AG562272	2	WASHER M12 LK ZN REG	
7	AG562375	2	BOLT M12-1.75X 25MM G8.8 ZN HH	
8	WR568276	2	MOUNT-VIBRATION	
9	6595786	2	CLAMP-FULL CIRCLE	
10	6626146	1	PIPE-TAIL	
11	6627230	1	BRACKET-EXHAUST	
12	6660863	1	CLAMP ASSY-EXHAUST	
13	6671620	1	MUFFLER-SPARK ARRESTOR	
	FOOTNOTE		FOR ENGINE GASKET USE 6668623	

Copyright © 2007 AGCO Corporation

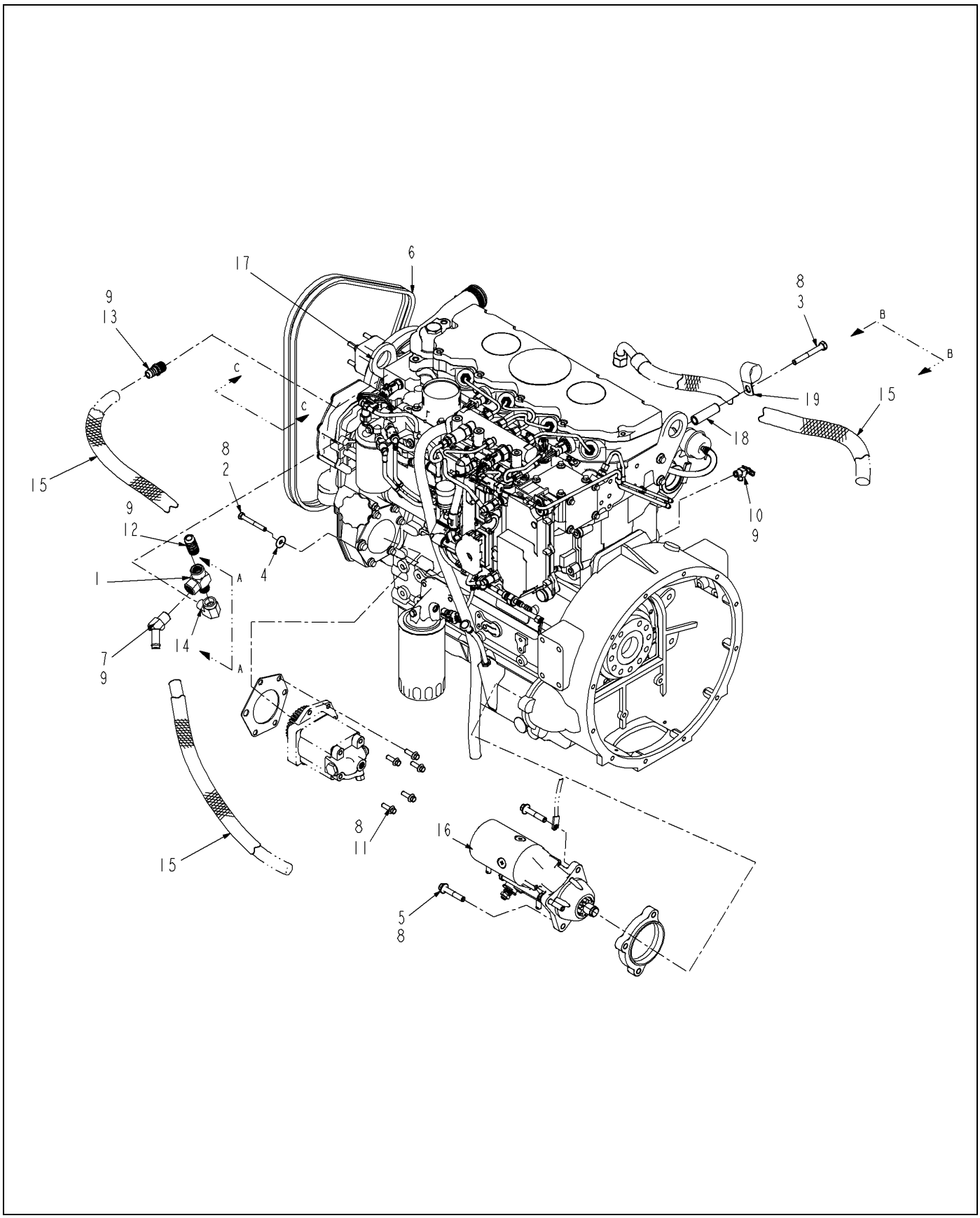

513109D1-01-N965-01.TIF

Copyright © 2007 AGCO Corporation

ITEM	PART #	QTY	DESCRIPTION	COMMENTS
1	WR22303	1	TEE-08FP/-08MP/-08FP	
2	WR55041	1	SCREW-CAP HEX M8 X 65	
3	WR55052	1	SCREW-CAP HEX M10 X 80	
4	WR55157	1	WASHER-FLAT,8MM ID,	
5	WR55219	3	SCREW-HEX FLG,M10X1.5X55 CL8.8	
6	WR124984	1	BELT SET-57.5 IN MATCHED	
7	WR129819	1	ADAP 45D 0.50 MNPT X 0.62 MHB	
8	AG512885	AR	LOCTITE ADHESIVE SEALANT BLUE	
9	AG513916	AR	LOCTITE HYD SEALANT BROWN	
10	AG515983	1	PETCOCK DRAIN 0.25NPT BR	
11	AG520967	5	BOLT-M8-1.25X25,CL8.8,ZN FLG	
12	AG553867	1	HOSE BARB 0.50NPTX0.75 STL	
13	AG558648	1	HOSE BARB 0.50NPTX0.62HOSE STL	
14	AG711680	1	ELBOW 90D 0.50 STR 304 SS	
15	6656155	-	HOSE-BULK,NYLON [BULK: 7.500 FT]	
16	6665654	1	MOTOR-STARTER	[A] SEE PAGE 10-17
17	513770D1	1	ENGINE - C4.4 CAT TIER 3 AT	
18	WR55649	1	SPACER	
19	WR55652	1	CLAMP CUSHION 1.188IDX.53	
	FOOTNOTE [A]		ITEM 31 CANNOT BE PURCHASED INDIVIDUALLY BUT IS INCLUDED IN HOUSING.	
	FOOTNOTE [A]		ITEM 1: MOTOR-STARTER COMPLETE	

Copyright © 2007 AGCO Corporation

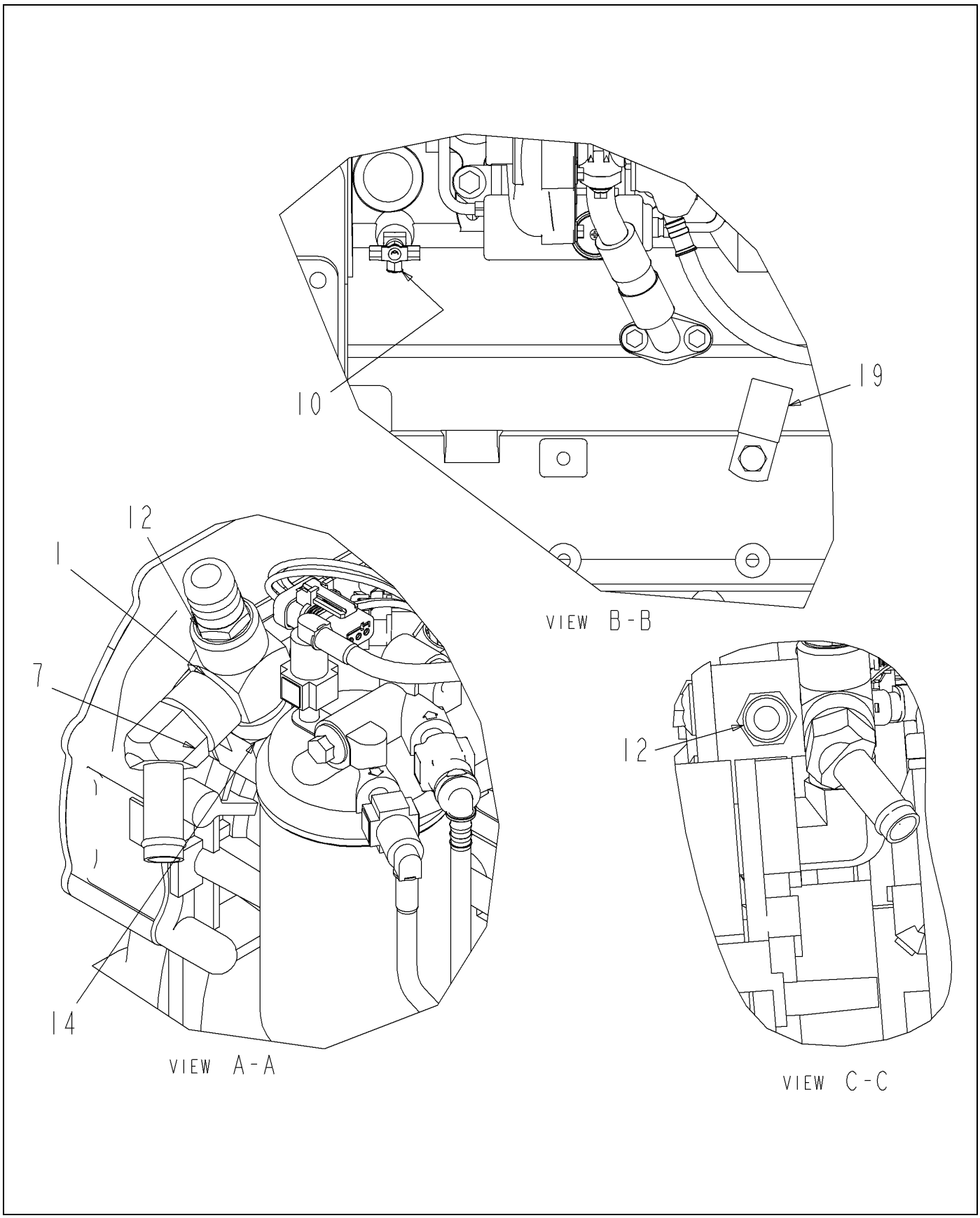

513109D1-01-N965-02.TIF

Copyright © 2007 AGCO Corporation

ITEM	PART #	QTY	DESCRIPTION	COMMENTS
1	WR22303	1	TEE-08FP/-08MP/-08FP	
7	WR129819	1	ADAP 45D 0.50 MNPT X 0.62 MHB	
10	AG515983	1	PETCOCK DRAIN 0.25NPT BR	
12	AG553867	1	HOSE BARB 0.50NPTX0.75 STL	
14	AG711680	1	ELBOW 90D 0.50 STR 304 SS	
19	WR55652	1	CLAMP CUSHION 1.188IDX.53	

Copyright © 2007 AGCO Corporation

KIT-AUTO TRANS,ALLISON,SC4X50 2-1
TRANSMISSION-AUTO, 2100RDS 2-2

Please refer to the Bill Of Material on the opposite page for related Installations, Assemblies, or Parts

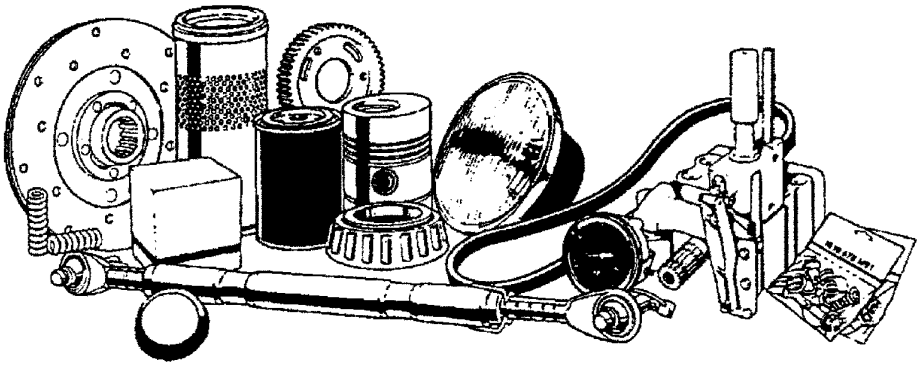

508215d1-01-N368-.tif

Copyright © 2007 AGCO Corporation

KIT-AUTO TRANS,ALLISON,SC4X50

ITEM	PART #	QTY	DESCRIPTION	COMMENTS
1	508213D1	1	TRANSMISSION-AUTO, 2100RDS	SEE PAGE 2-2
2	508214D1	1	TCU-ALLISON	
3	WR129593	2	KIT-BOLT,FLEXPLATE ADAPTER	
4	WR129628	1	ADAPTER-FLEXPLATE,ALLISON	
5	WR129630	1	WASHER-SEALING,END YOKE	
6	WR129631	1	BOLT-END YOKE,ALLISON	

Copyright © 2007 AGCO Corporation

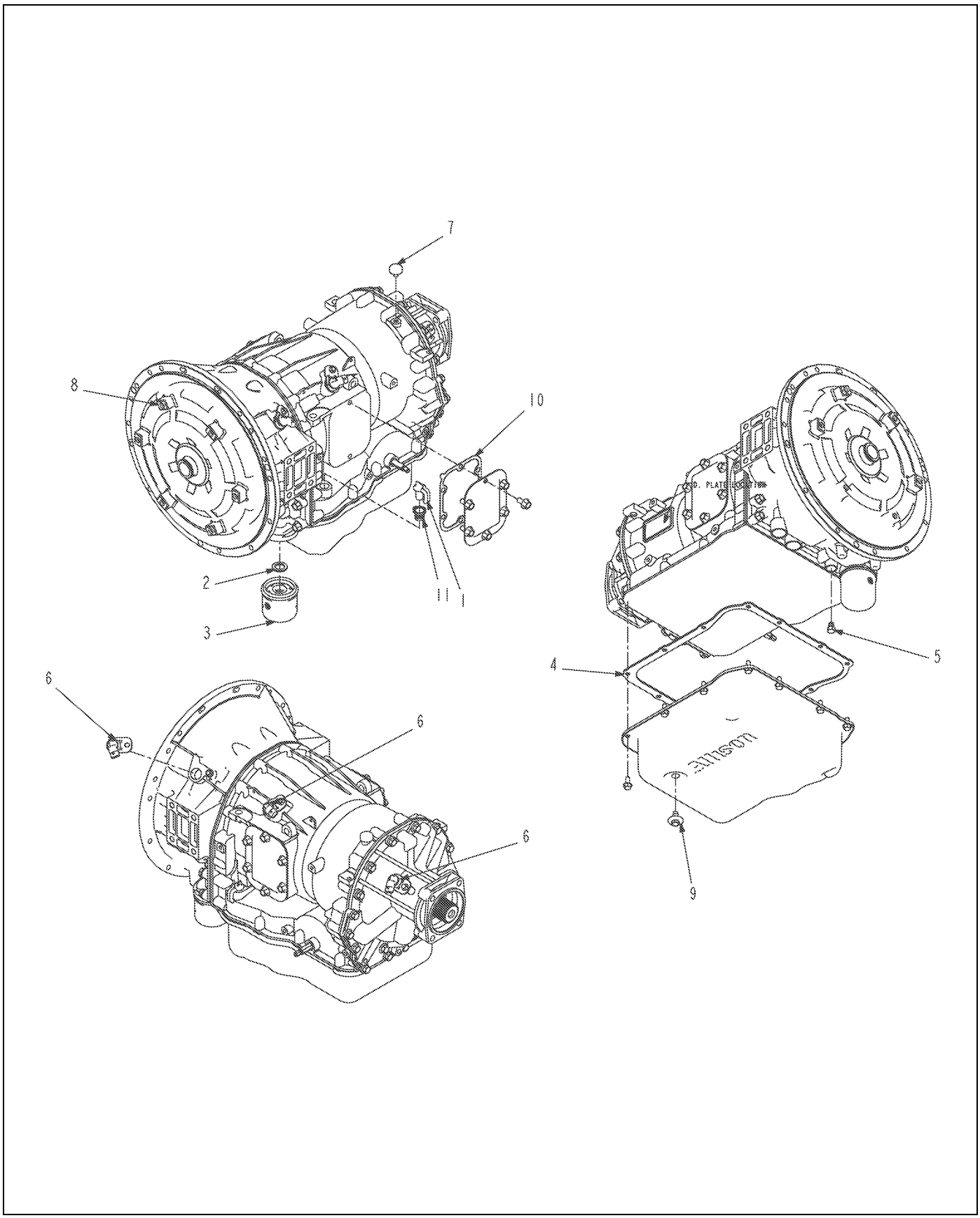

508213D1-01-N368-.TIF

Copyright © 2007 AGCO Corporation

ITEM	PART #	QTY	DESCRIPTION	COMMENTS
1	WR129609	1	PLUG-DIPSTICK TUBE	
2	WR129610	1	MAGNET-OIL FILTER, TRANS	
3	WR129616	1	FILTER-OIL,TRANSMISSION	
4	WR129617	1	GASKET-OIL PAN,TRANSMISSION	
5	WR129618	1	PRESSURE TAP PLUG ASM-W/SEAL	
6	WR129621	3	SPEED SENSOR ASM-W/SEAL	
7	WR129622	1	BREATHER ASM-TRANSMISSION	
8	WR129623	1	TORQUE CONVERTER-TC211	
9	WR129624	1	DRAIN PLUG ASM-W/SEAL	
10	WR129626	2	GASKET-COVER,PTO PAD	
11	WR129639	2	SEAL-DIPSTICK TUBE	

Copyright © 2007 AGCO Corporation

DRIVETRAIN INSTL-AT, 4450/4650	3-1
DRIVETRAIN INSTL-AT, 4450/4650	3-2
CHAINCASE INSTL - 4460	3-3
CASE-CHAIN,FNL DRIVE,LH,ASM	3-4
CASE-CHAIN,FNL DRIVE,LH,ASM	3-5
CASE-CHAIN, FNL DRIVE, RH ASM	3-6
CASE-CHAIN, FNL DRIVE, RH ASM	3-7
CHAINCASE INSTL - 4660	3-8
CASE-CHAIN,FNL DRIVE,LH,ASM	3-9
CASE-CHAIN,FNL DRIVE,RH,ASM	3-10
STEERING GRP - WF,80 IN	3-11
DIFFERENTIAL ASSY	3-12
CYLINDER ASSY-BRAKE	3-13
DRIVESHAFT INSTL-4000,80	3-14
SHAFT-DRIVE 80-108 HD	3-15
DRIVESHAFT INSTL- 80-88 IN	3-16
FA-DRIVESHAFT, 80-88 IN	3-17
OPT-72 IN DRIVESHAFT	3-18
DRIVESHAFT, AUTO ALLISON	3-19

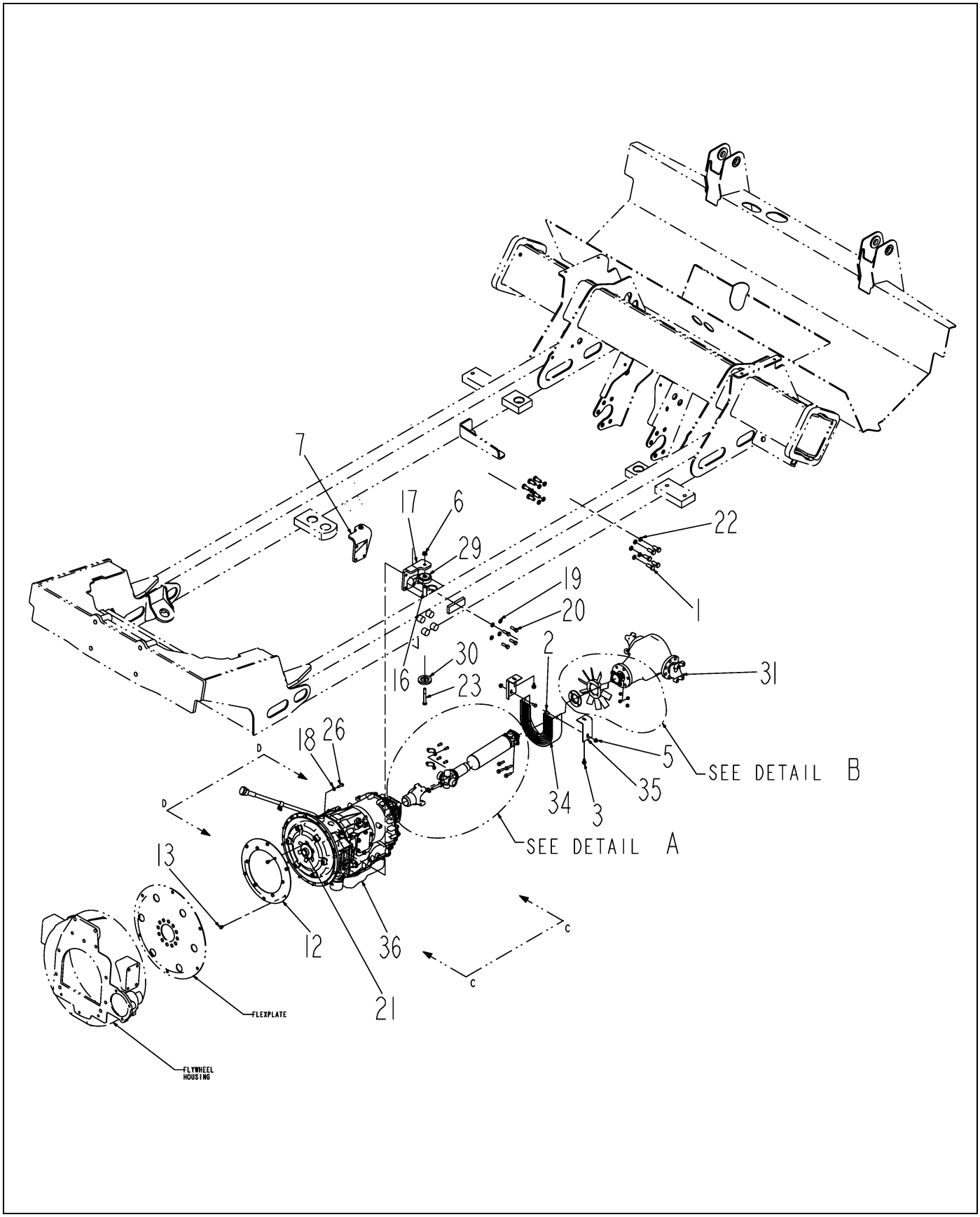

508212D1-01-N368-01.TIF

Copyright © 2007 AGCO Corporation

ITEM	PART #	QTY	DESCRIPTION	COMMENTS
1	WR10193	10	SCREW-CAP HEX 5/8 NC X	
2	WR55046	2	SCREW-CAP HEX M10 X R/B 562463	
3	WR55191	2	HEX HEAD,THREAD ROLLING SCREW	
5	WR55301	3	NUT-FLANGE,M10 X 1.5,PREV	
6	WR55372	2	NUT-LOCK FLANGE, 1/2-13NC	
7	WR126834	1	MOUNT-TRANSMISSION RH	
12	WR129628	-	ADAPTER-FLEXPLATE,ALLISON	
13	WR129629	-	BOLT-FLEXPLATE ADAPTER	
16	WR129749	2	SPACER-ISOLATOR	
17	WR129750	1	MOUNT-TRANSMISSION LH	
18	WR129759	12	WASHER-FLAT,M10,ZN,HARD	
19	WR129762	8	WASHER-FLAT,M12,ZN,HARD	
20	WR129763	8	BOLT M12-1.75X40MM 10.9 ZN HH	
21	WR129768	-	LUBRICANT-GREASE LI/MO LG12	
22	AG550450	10	WASHER 0.62 LK ZN REG	
23	AG552410	2	BOLT 0.50-13NCX 4.00 G5 ZN HHD	
26	AG562817	12	BOLT M10-1.5X35MM G10.9 ZN HHD	
29	6661785	2	MOUNT-ENGINE	
30	6661787	2	WASHER-SNUBBING	
31	6672337	1	DIFFERENTIAL ASSY	[A] SEE PAGE 3-12
34	6802750	1	SHIELD-FAN	
35	6802806	2	BRACKET,FAN SHIELD	
36	508213D1	-	TRANSMISSION-AUTO, 2100RDS	SEE PAGE 2-2
37	508215D1	1	KIT-AUTO TRANS,ALLISON,SC4X50	SEE PAGE 2-1
	FOOTNOTE [A]		ITEM 18 CANNOT BE PURCHASED INDIVIDUALLY BUT IS INCLUDED IN THE DIFFERENTIAL.	
	FOOTNOTE [A]		ITEMS 5 & 7 CANNOT BE PURCHASED INDIVIDUALLY BUT ARE INCLUDED IN SHIM KIT 42.	
	FOOTNOTE [A]		ITEM 21 CANNOT BE PURCHASED INDIVIDUALLY BUT IS INCLUDED IN THE DIFFERENTIAL KIT.	
	FOOTNOTE [A]		ITEMS 24-28 CANNOT BE PURCHASED INDIVIDUALLY BUT ARE INCLUDED IN THE HOUSING.	
	FOOTNOTE [A]		ITEM 22 CANNOT BE PURCHASED INDIVIDUALLY BUT IS INCLUDED IN THE DIFFERENTIAL KIT.	

Copyright © 2007 AGCO Corporation

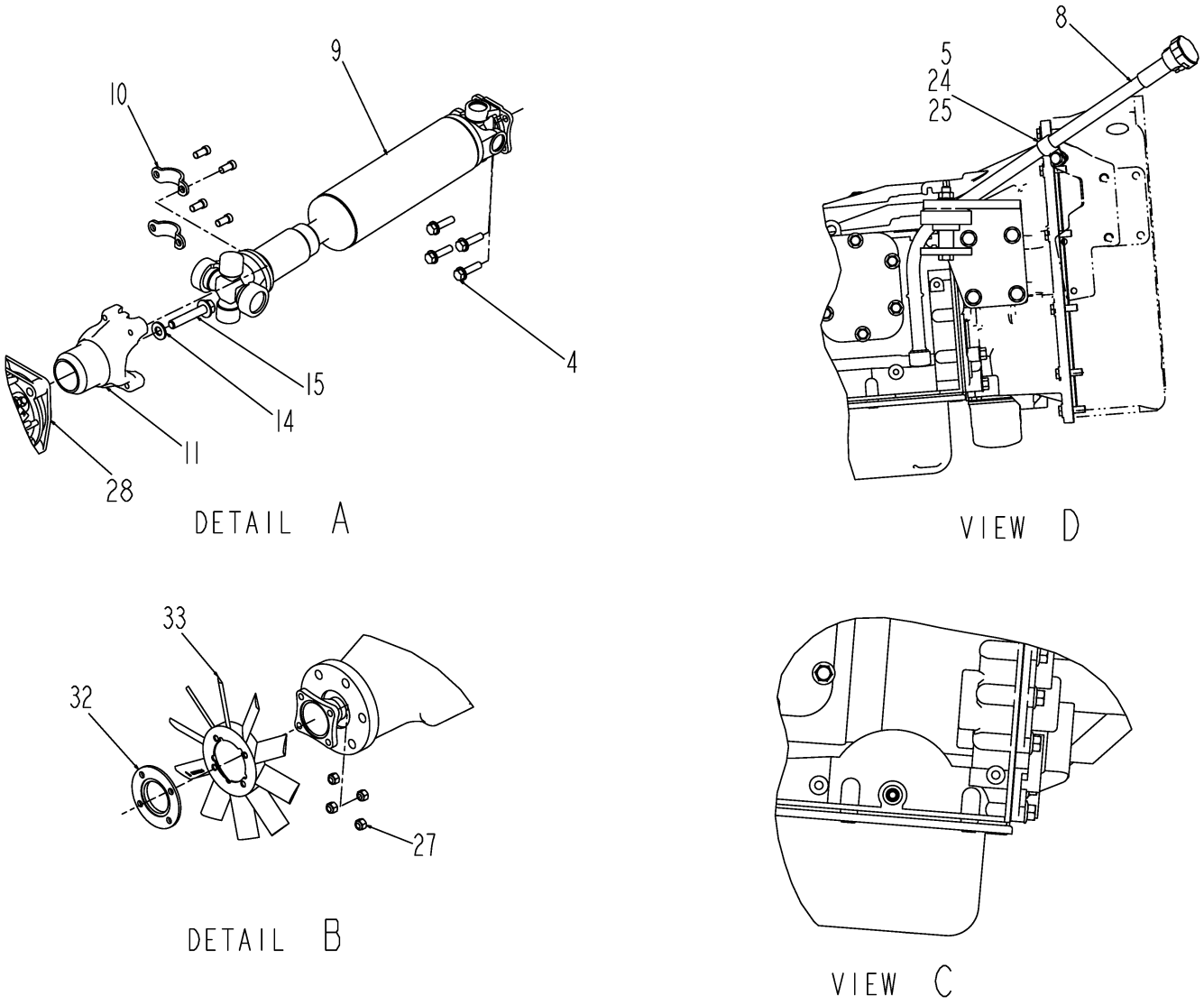

508212D1-01-N368-02.TIF

Copyright © 2007 AGCO Corporation

ITEM	PART #	QTY	DESCRIPTION	COMMENTS
4	WR55261	4	SCREW-HEX FLG,.375NCX1.50 GR5	
5	WR55301	3	NUT-FLANGE,M10 X 1.5,PREV	
8	WR126985	1	DIPSTICK-ALLISON TRANSMISSION	
9	WR127615	1	DRIVESHAFT, AUTO ALLISON	SEE PAGE 3-19
10	WR129592	1	STRAP KIT-1480/1550	
11	WR129627	1	YOKE-END,1480 SPICER	
14	WR129630	-	WASHER-SEALING,END YOKE	
15	WR129631	-	BOLT-END YOKE,ALLISON	
24	AG561683	1	BOLT M10-1.5 X 25MM G8.8 ZN HH	
25	AG562237	1	CLAMP CTD 0.75IDX0.75WIDE	
27	AG601411	4	NUT 0.37-16NC HEX ZN REG NY	
28	WR818623	AR	LUBRICANT-PETROLEUM JELLY	
32	6801064	1	HUB-FAN	
33	6801065	1	FAN-COOLING	

Copyright © 2007 AGCO Corporation

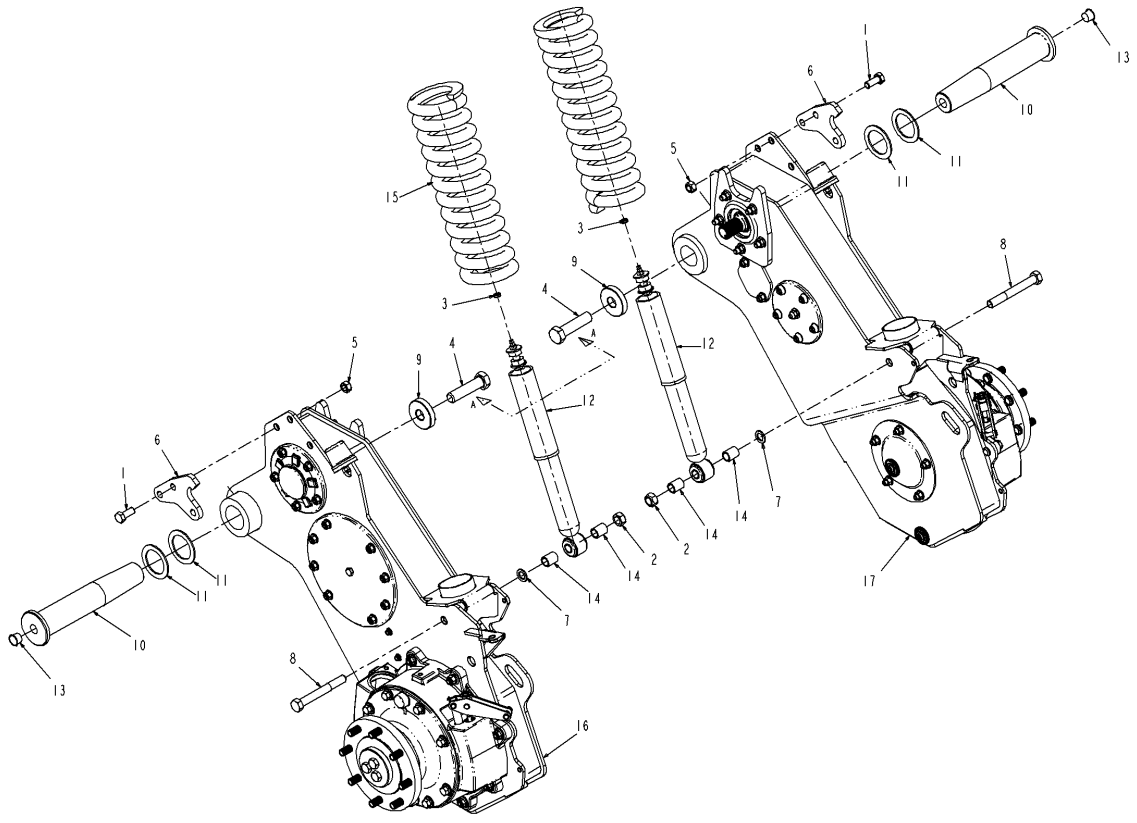

519652D1-01-R162-.TIF

Copyright © 2007 AGCO Corporation

ITEM	PART #	QTY	DESCRIPTION	COMMENTS
1	WR10193	6	SCREW-CAP HEX 5/8 NC X	
2	WR35152	2	NUT-TOPLOCK3/4-10UNC G8 ""ADAM""	
3	WR55121	2	NUT-JAM, 3/8-24UNF G2	
4	WR55163	2	SCREW-CAP HEX 1-14UNS X 4 LG	
5	WR55355	6	NUT-TOPLOCK,5/8-11UNC G8	
6	WR121637	2	PLATE-STOP	
7	AG122800	2	WASHER-FLAT .75 NR,PL ZN/Y	
8	WR522823	2	BOLT 0.75-10NCX 6.00 G5 PL HHD	
9	6569461	2	WASHER-AXLE	
10	6618620	2	SHAFT	
11	6626218	4	WASHER	
12	6665007	2	SHOCK-DAMPENER	
13	6666641	2	PLUG-CAP	
14	6802006	4	SPACER	
15	6802016	2	SPRING	
16	519653D1	1	CASE-CHAIN,FNL DRIVE,LH,ASM	[A] SEE PAGE 3-4
17	519654D1	1	CASE-CHAIN, FNL DRIVE, RH ASM	[B] SEE PAGE 3-6
	FOOTNOTE [A]		EFF S/N ..Txx1001	
	FOOTNOTE [B]		EFF S/N ..Txx1001	
	FOOTNOTE		EFF S/N ..Txx1001	

Copyright © 2007 AGCO Corporation

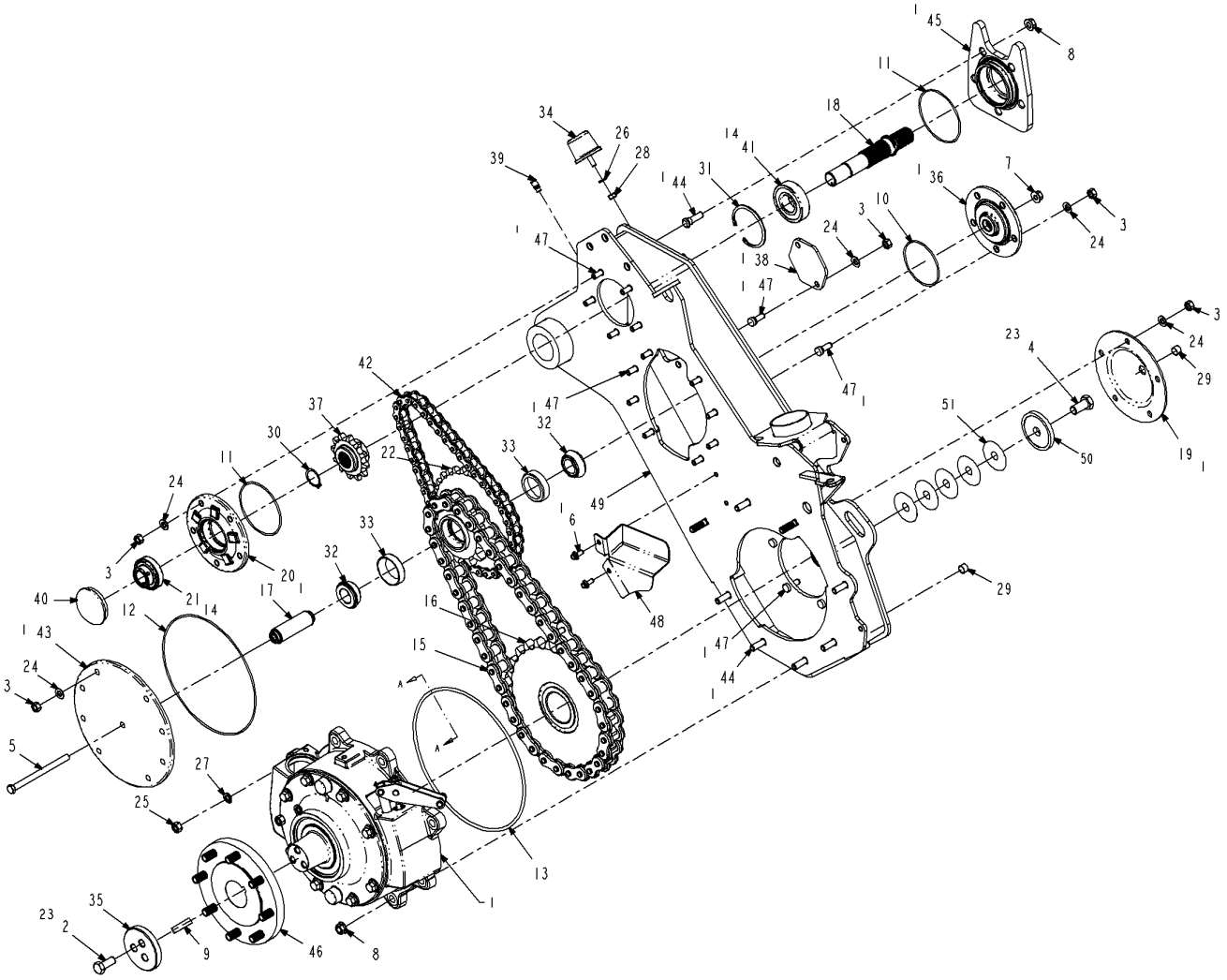

519653D1-01-R162-.TIF

Copyright © 2007 AGCO Corporation

CASE-CHAIN,FNL DRIVE,LH,ASM

ITEM	PART #	QTY	DESCRIPTION	COMMENTS
1	WR9017	AR	SILICONE-LOCTITE 16 OZ TUBE	
2	WR10193	3	SCREW-CAP HEX 5/8 NC X	
3	WR11522	25	NUT-HEX, 7/16 - 20 UNF	
4	WR26541	1	SCREW-CAP HEX 3/4 NF X	
5	WR55065	1	SCREW-CAP HEX M12 X 170	
6	WR55206	2	SCREW-HEX FLG,M8X1.25X20 CL8.8	
8	WR55317	11	NUT-FLANGE HEX, G8	
9	WR55394	1	KEY-WOODRUFF,2.75 X .594	
10	WR55426	1	O RING-3.875 ID	
11	WR55427	2	O RING-4.75 ID X .139 CS,	
12	WR55428	1	O RING-11.00 ID,	
13	WR55429	1	O RING-13.00 ID X .275 CS	
14	WR120657	AR	LOCTITE-680 HIGH STRENGTH RC	
15	WR121658	1	CHAIN-ENDLESS,120-42	
16	WR121659	1	SPROCKET-CHAIN,120-25T	
17	WR121660	1	SHAFT-JACK	
18	WR121664	1	SHAFT-INPUT	
19	WR121665	1	COVER-WLDMT	
20	WR121667	1	SUPPORT-BEARING	
21	WR121668	1	BEARING-BALL,SEALED,AR207-104	
22	WR122572	1	SPROCKET-ASM-MACH	
23	AG512885	AR	LOCTITE ADHESIVE SEALANT BLUE	
24	AG515782	25	WASHER 0.43 FL ZN SAE TYP-A G8	
25	AG550124	2	NUT 0.50-13NC HEX ZN REG	
26	AG550191	1	WASHER 0.37 LK ZN REG	
27	AG550264	2	WASHER 0.50 LK ZN REG	
28	AG550825	1	NUT 0.37-16NC HEX ZN REG	
29	AG561081	2	PLUG PIPE .37 HEX S0C NPT STL	
30	WR659764	1	RING-SNAP	
31	AG711022	1	RING-SNAP	
32	WR743773	2	BEARING-CONE	
33	WR743774	2	BEARING-CUP	
34	6530360	1	BUMPER-RUBBER	
35	6565947	1	CAP-SPROCKET,END AXLE	
36	6617472	1	SUPPORT-JACKSHAFT	
37	6618845	1	SPROCKET-12 TOOTH	
38	6626924	1	COVER-UPPER	
39	6634761	1	VENT-AIR	
40	6656492	1	CAP-CHAINCASE	
41	6658752	1	BEARING	
42	6662691	1	CHAIN-ENDLESS	
43	6800398	1	SUPPORT-OUT JACKSHAFT	
44	6801208	11	BOLT-WHEEL	
45	6802726	1	HOUSING-MACH	
46	6803541	1	HUB ASSY-WHEEL	SEE PAGE 5-1
47	6803572	25	BOLT-WHEEL	
48	6805178	1	BRACKET-W/A,LH	
49	507513D1	1	CHAINCASE WLDMT- 4455 LH	
50	514261D1	1	WASHER-AXLE SPROCKET	
51	WR55784	AR	SHIM	
	FOOTNOTE		EFF S/N ..Txx1001	

Copyright © 2007 AGCO Corporation

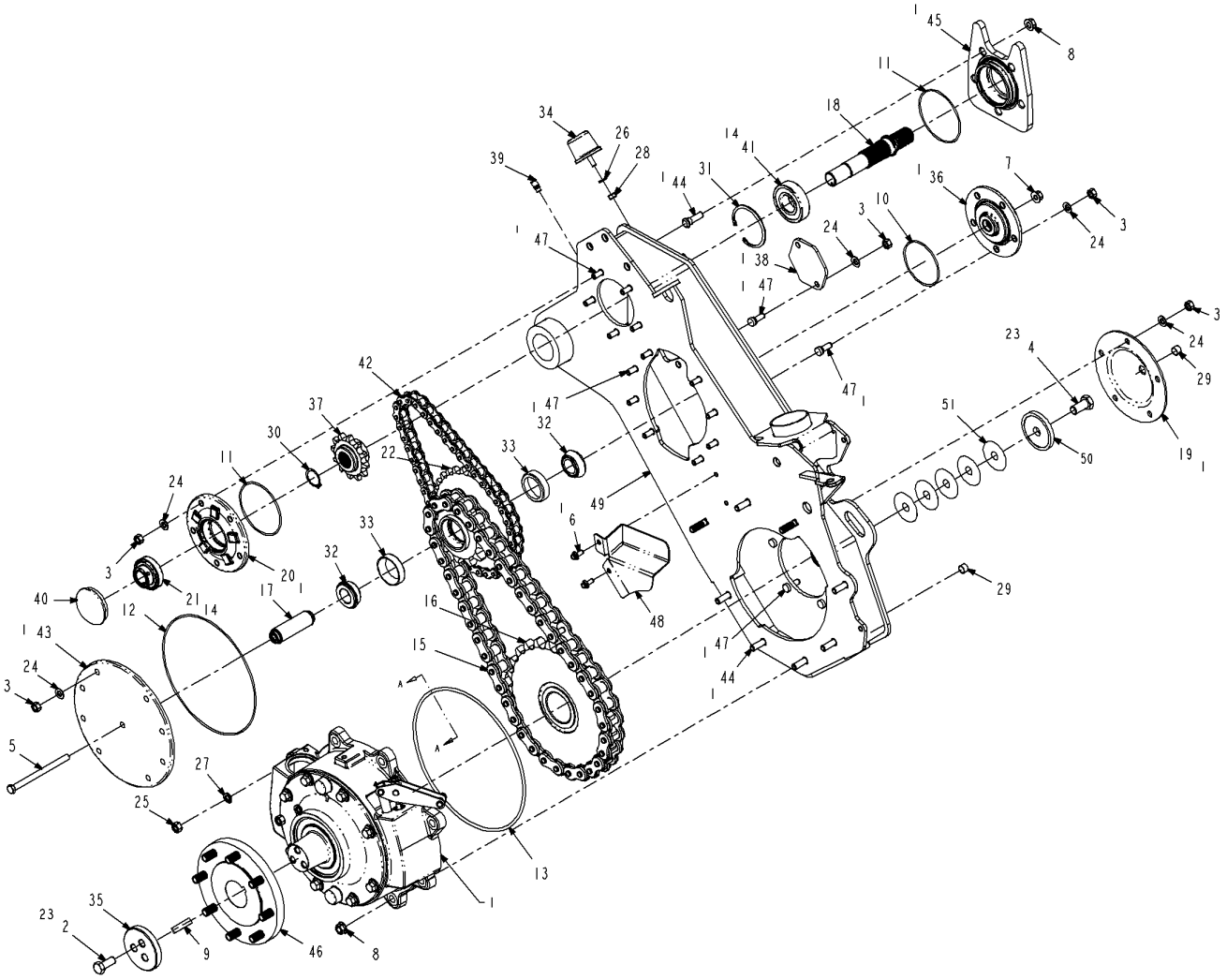

519653D1-01-R162-.TIF

Copyright © 2007 AGCO Corporation

CASE-CHAIN,FNL DRIVE,LH,ASM

ITEM	PART #	QTY	DESCRIPTION	COMMENTS
7	WR55302	1	NUT-FL,M12 X 1.75,CL8,YZ	
	FOOTNOTE		EFF S/N ..Txx1001	

Copyright © 2007 AGCO Corporation

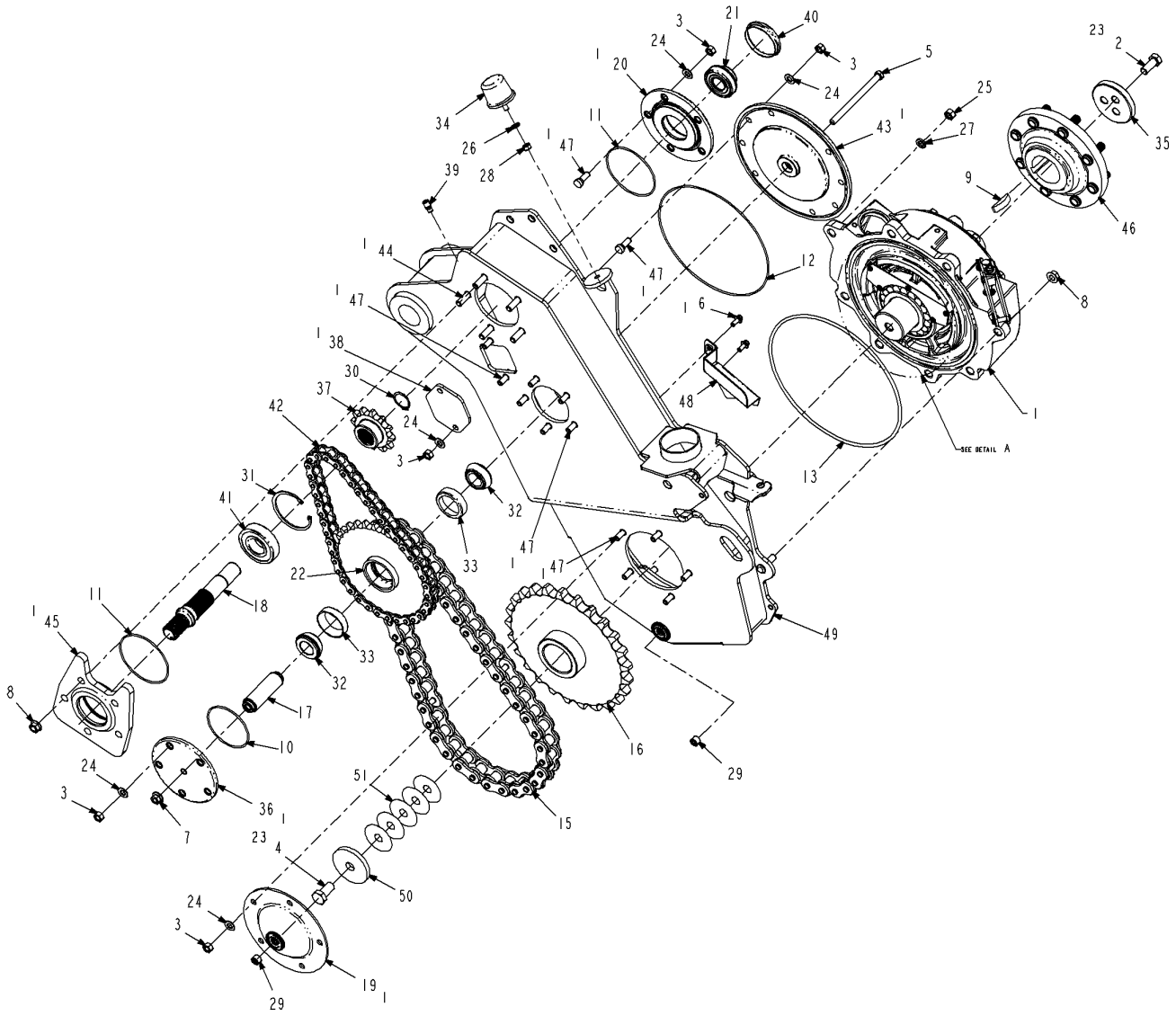

519654D1-01-R162-.TIF

Copyright © 2007 AGCO Corporation

ITEM	PART #	QTY	DESCRIPTION	COMMENTS
1	WR9017	AR	SILICONE-LOCTITE 16 OZ TUBE	
2	WR10193	3	SCREW-CAP HEX 5/8 NC X	
3	WR11522	25	NUT-HEX, 7/16 - 20 UNF	
4	WR26541	1	SCREW-CAP HEX 3/4 NF X	
5	WR55065	1	SCREW-CAP HEX M12 X 170	
6	WR55206	2	SCREW-HEX FLG,M8X1.25X20 CL8.8	
7	WR55302	1	NUT-FL,M12 X 1.75,CL8,YZ	
8	WR55317	11	NUT-FLANGE HEX, G8	
9	WR55394	1	KEY-WOODRUFF,2.75 X .594	
10	WR55426	1	O RING-3.875 ID	
11	WR55427	2	O RING-4.75 ID X .139 CS,	
12	WR55428	1	O RING-11.00 ID,	
13	WR55429	1	O RING-13.00 ID X .275 CS	
15	WR121658	1	CHAIN-ENDLESS,120-42	
16	WR121659	1	SPROCKET-CHAIN,120-25T	
17	WR121660	1	SHAFT-JACK	
18	WR121664	1	SHAFT-INPUT	
19	WR121665	1	COVER-WLDMT	
20	WR121667	1	SUPPORT-BEARING	
21	WR121668	1	BEARING-BALL,SEALED,AR207-104	
22	WR122572	1	SPROCKET-ASM-MACH	
23	AG512885	AR	LOCTITE ADHESIVE SEALANT BLUE	
24	AG515782	25	WASHER 0.43 FL ZN SAE TYP-A G8	
25	AG550124	2	NUT 0.50-13NC HEX ZN REG	
26	AG550191	1	WASHER 0.37 LK ZN REG	
27	AG550264	2	WASHER 0.50 LK ZN REG	
28	AG550825	1	NUT 0.37-16NC HEX ZN REG	
29	AG561081	2	PLUG PIPE .37 HEX S0C NPT STL	
30	WR659764	1	RING-SNAP	
31	AG711022	1	RING-SNAP	
32	WR743773	2	BEARING-CONE	
33	WR743774	2	BEARING-CUP	
34	6530360	1	BUMPER-RUBBER	
35	6565947	1	CAP-SPROCKET,END AXLE	
36	6617472	1	SUPPORT-JACKSHAFT	
37	6618845	1	SPROCKET-12 TOOTH	
38	6626924	1	COVER-UPPER	
39	6634761	1	VENT-AIR	
40	6656492	1	CAP-CHAINCASE	
41	6658752	1	BEARING	
42	6662691	1	CHAIN-ENDLESS	
43	6800398	1	SUPPORT-OUT JACKSHAFT	
44	6801208	11	BOLT-WHEEL	
45	6802726	1	HOUSING-MACH	
46	6803541	1	HUB ASSY-WHEEL	SEE PAGE 5-1
47	6803572	25	BOLT-WHEEL	
48	6805214	1	BRACKET-W/A,RH	
49	507514D1	1	CHAINCASE WLDMT - 4455 RH	
50	514261D1	1	WASHER-AXLE SPROCKET	
51	WR55784	AR	SHIM	
	FOOTNOTE		EFF S/N ..Txx1001	

Copyright © 2007 AGCO Corporation

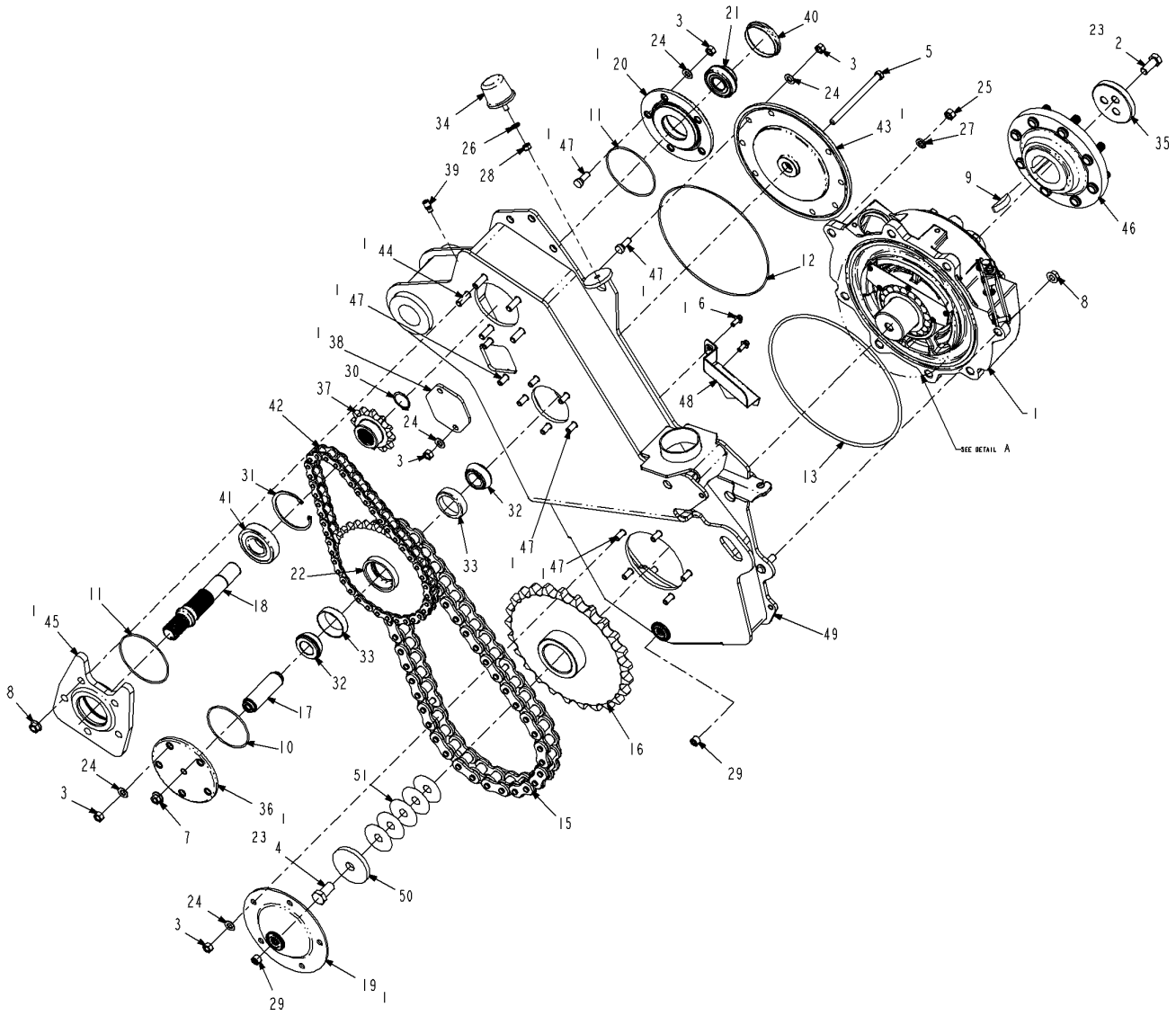

519654D1-01-R162-.TIF

Copyright © 2007 AGCO Corporation

ITEM	PART #	QTY	DESCRIPTION	COMMENTS
14	WR120657	AR	LOCTITE-680 HIGH STRENGTH RC	
	FOOTNOTE		EFF S/N ..Txx1001	

Copyright © 2007 AGCO Corporation

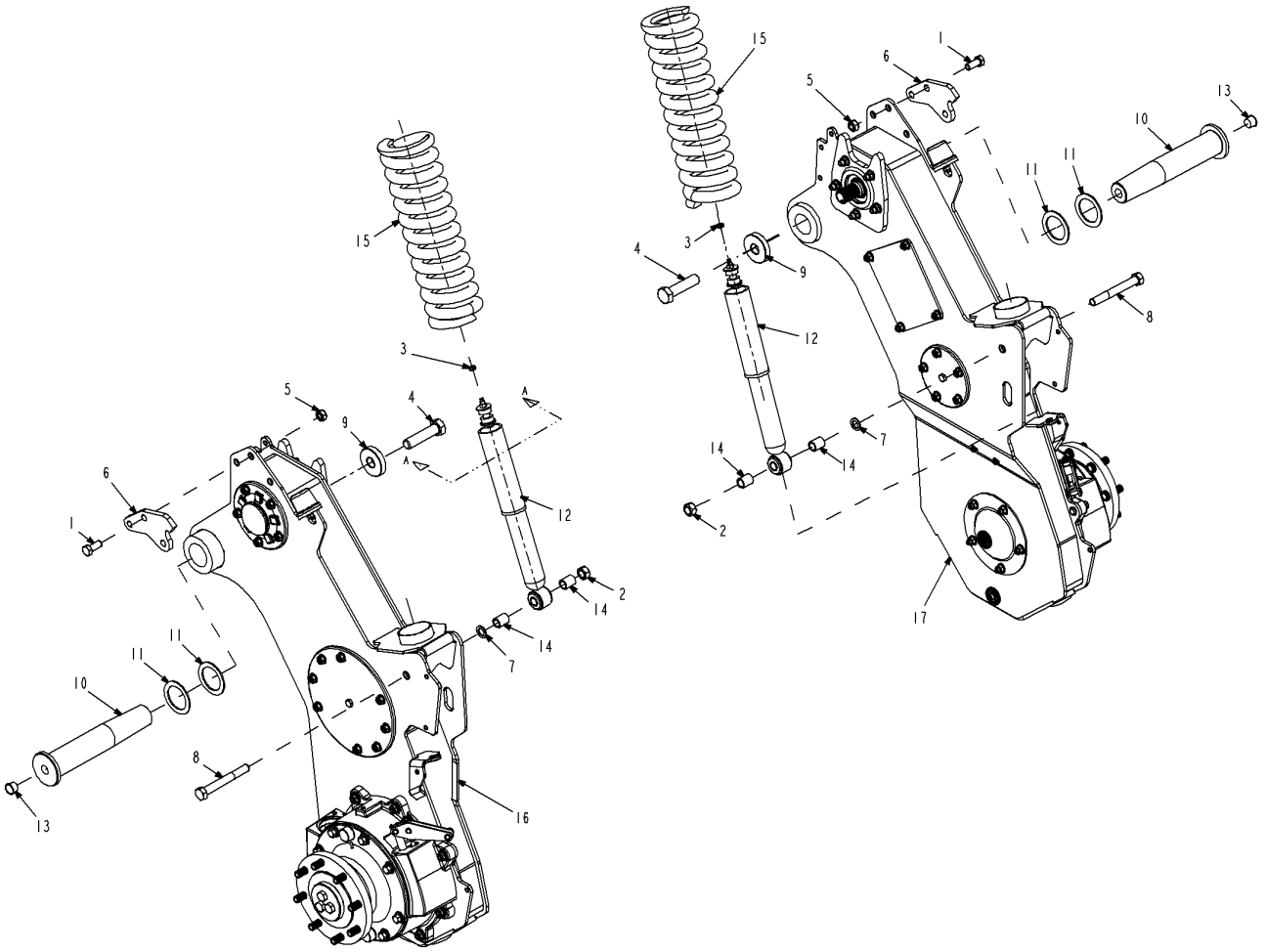

519655D1-01-R162-.TIF

Copyright © 2007 AGCO Corporation

ITEM	PART #	QTY	DESCRIPTION	COMMENTS
1	WR10193	6	SCREW-CAP HEX 5/8 NC X	
2	WR35152	2	NUT-TOPLOCK3/4-10UNC G8 ""ADAM""	
3	WR55121	2	NUT-JAM, 3/8-24UNF G2	
4	WR55163	2	SCREW-CAP HEX 1-14UNS X 4 LG	
5	WR55355	6	NUT-TOPLOCK,5/8-11UNC G8	
6	WR121636	2	PLATE-STOP	
7	AG122800	2	WASHER-FLAT .75 NR,PL ZN/Y	
8	WR522823	2	BOLT 0.75-10NCX 6.00 G5 PL HHD	
9	6569461	2	WASHER-AXLE	
10	6618620	2	SHAFT	
11	6626218	4	WASHER	
12	6665007	2	SHOCK-DAMPENER	
13	6666641	2	PLUG-CAP	
14	6802006	4	SPACER	
15	6802016	2	SPRING	
16	519656D1	1	CASE-CHAIN,FNL DRIVE,LH,ASM	SEE PAGE 3-9
17	519657D1	1	CASE-CHAIN,FNL DRIVE,RH,ASM	SEE PAGE 3-10

Copyright © 2007 AGCO Corporation

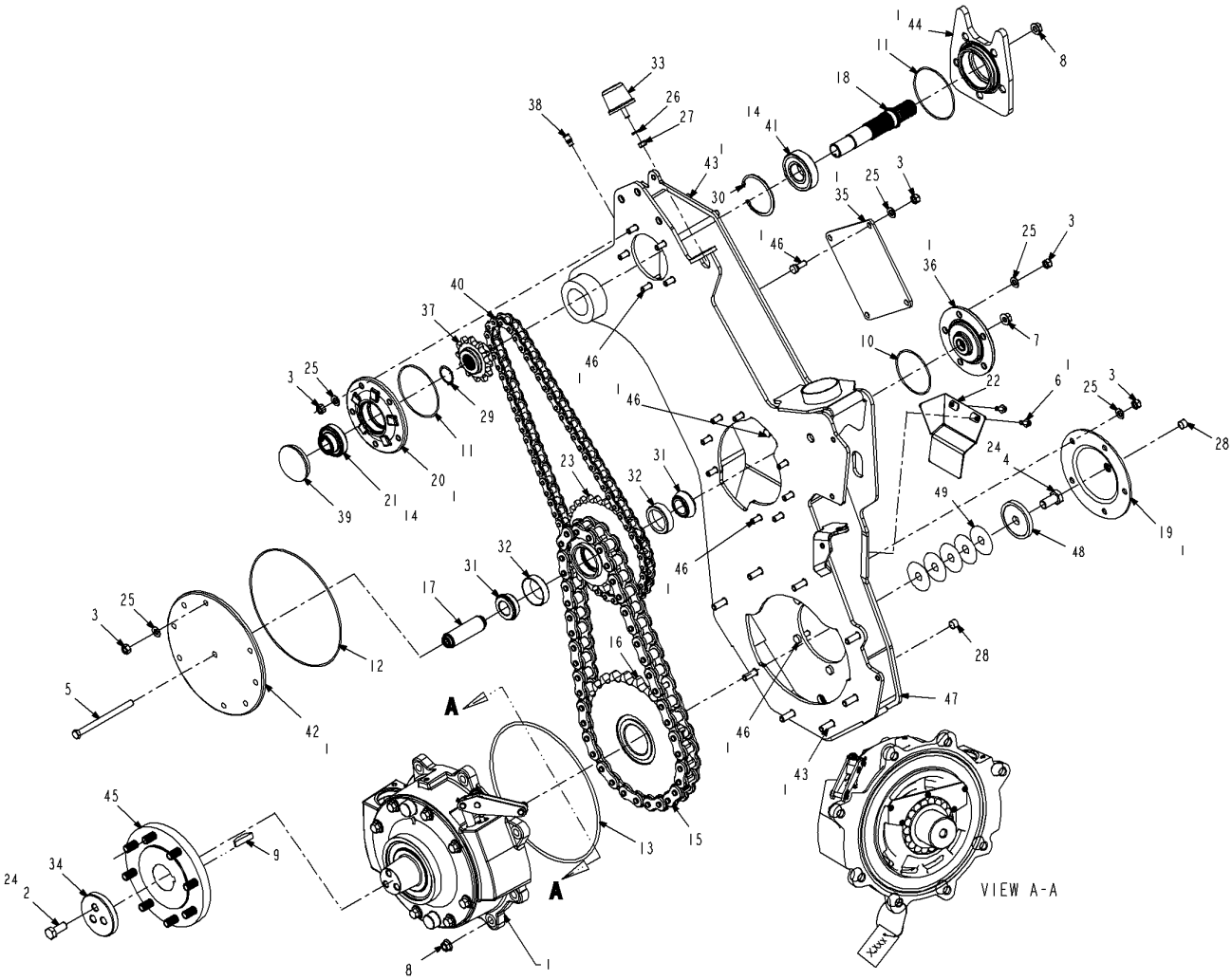

519656D1-01-R162-.TIF

Copyright © 2007 AGCO Corporation

CASE-CHAIN,FNL DRIVE,LH,ASM

ITEM	PART #	QTY	DESCRIPTION	COMMENTS
1	WR9017	AR	SILICONE-LOCTITE 16 OZ TUBE	
2	WR10193	3	SCREW-CAP HEX 5/8 NC X	
3	WR11522	27	NUT-HEX, 7/16 - 20 UNF	
4	WR26541	1	SCREW-CAP HEX 3/4 NF X	
5	WR55065	1	SCREW-CAP HEX M12 X 170	
6	WR55206	2	SCREW-HEX FLG,M8X1.25X20 CL8.8	
7	WR55302	1	NUT-FL,M12 X 1.75,CL8,YZ	
8	WR55317	13	NUT-FLANGE HEX, G8	
9	WR55394	1	KEY-WOODRUFF,2.75 X .594	
10	WR55426	1	O RING-3.875 ID	
11	WR55427	2	O RING-4.75 ID X .139 CS,	
12	WR55428	1	O RING-11.00 ID,	
13	WR55429	1	O RING-13.00 ID X .275 CS	
14	WR120657	AR	LOCTITE-680 HIGH STRENGTH RC	
15	WR121658	1	CHAIN-ENDLESS,120-42	
16	WR121659	1	SPROCKET-CHAIN,120-25T	
17	WR121660	1	SHAFT-JACK	
18	WR121664	1	SHAFT-INPUT	
19	WR121665	1	COVER-WLDMT	
20	WR121667	1	SUPPORT-BEARING	
21	WR121668	1	BEARING-BALL,SEALED,AR207-104	
22	WR121669	1	BRACKET-WLDMT,OIL,LH	
23	WR122572	1	SPROCKET-ASM-MACH	
24	AG512885	AR	LOCTITE ADHESIVE SEALANT BLUE	
25	AG515782	27	WASHER 0.43 FL ZN SAE TYP-A G8	
26	AG550191	1	WASHER 0.37 LK ZN REG	
27	AG550825	1	NUT 0.37-16NC HEX ZN REG	
28	AG561081	2	PLUG PIPE .37 HEX S0C NPT STL	
29	WR659764	1	RING-SNAP	
30	AG711022	1	RING-SNAP	
31	WR743773	2	BEARING-CONE	
32	WR743774	2	BEARING-CUP	
33	6530360	1	BUMPER-RUBBER	
34	6565947	1	CAP-SPROCKET,END AXLE	
35	6617316	1	COVER-UPPER	
36	6617472	1	SUPPORT-JACKSHAFT	
37	6618845	1	SPROCKET-12 TOOTH	
38	6634761	1	VENT-AIR	
39	6656492	1	CAP-CHAINCASE	
40	6658413	1	CHAIN-ENDLESS	
41	6658752	1	BEARING	
42	6800398	1	SUPPORT-OUT JACKSHAFT	
43	6801208	13	BOLT-WHEEL	
44	6802726	1	HOUSING-MACH	
45	6803541	1	HUB ASSY-WHEEL	SEE PAGE 5-1
46	6803572	27	BOLT-WHEEL	
47	507511D1	1	CHAINCASE WLDMT- 4655 LH	
48	514261D1	1	WASHER-AXLE SPROCKET	
49	WR55784	AR	SHIM	

Copyright © 2007 AGCO Corporation

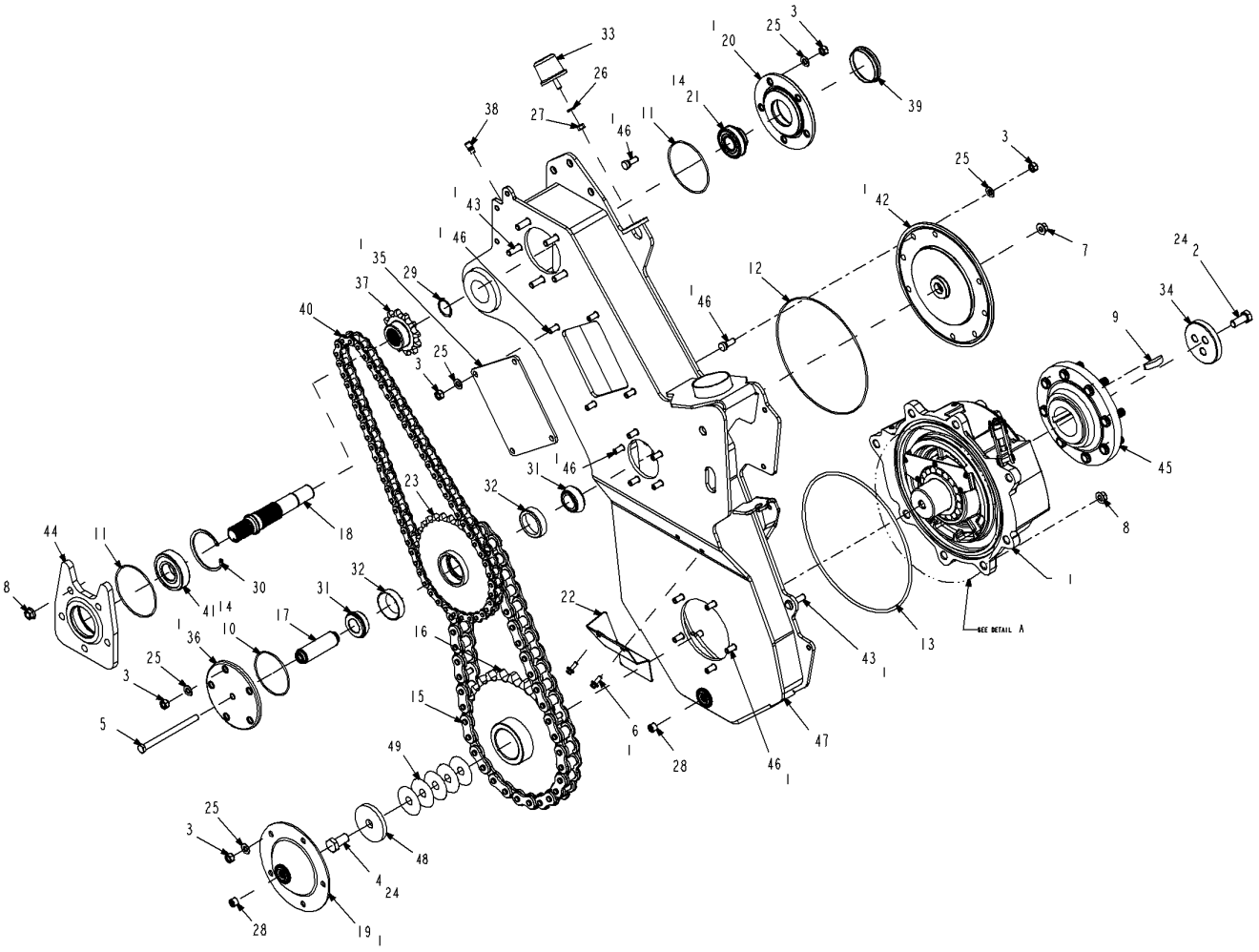

519657D1-01-R162-.TIF

Copyright © 2007 AGCO Corporation

CASE-CHAIN,FNL DRIVE,RH,ASM

ITEM	PART #	QTY	DESCRIPTION	COMMENTS
1	WR9017	AR	SILICONE-LOCTITE 16 OZ TUBE	
2	WR10193	3	SCREW-CAP HEX 5/8 NC X	
3	WR11522	27	NUT-HEX, 7/16 - 20 UNF	
4	WR26541	1	SCREW-CAP HEX 3/4 NF X	
5	WR55065	1	SCREW-CAP HEX M12 X 170	
6	WR55206	2	SCREW-HEX FLG,M8X1.25X20 CL8.8	
7	WR55302	1	NUT-FL,M12 X 1.75,CL8,YZ	
8	WR55317	13	NUT-FLANGE HEX, G8	
9	WR55394	1	KEY-WOODRUFF,2.75 X .594	
10	WR55426	1	O RING-3.875 ID	
11	WR55427	2	O RING-4.75 ID X .139 CS,	
12	WR55428	1	O RING-11.00 ID,	
13	WR55429	1	O RING-13.00 ID X .275 CS	
14	WR120657	AR	LOCTITE-680 HIGH STRENGTH RC	
15	WR121658	1	CHAIN-ENDLESS,120-42	
16	WR121659	1	SPROCKET-CHAIN,120-25T	
17	WR121660	1	SHAFT-JACK	
18	WR121664	1	SHAFT-INPUT	
19	WR121665	1	COVER-WLDMT	
20	WR121667	1	SUPPORT-BEARING	
21	WR121668	1	BEARING-BALL,SEALED,AR207-104	
22	WR121671	1	BRACKET-WLDMT-OIL,RH	
23	WR122572	1	SPROCKET-ASM-MACH	
24	AG512885	AR	LOCTITE ADHESIVE SEALANT BLUE	
25	AG515782	27	WASHER 0.43 FL ZN SAE TYP-A G8	
26	AG550191	1	WASHER 0.37 LK ZN REG	
27	AG550825	1	NUT 0.37-16NC HEX ZN REG	
28	AG561081	2	PLUG PIPE .37 HEX S0C NPT STL	
29	WR659764	1	RING-SNAP	
30	AG711022	1	RING-SNAP	
31	WR743773	2	BEARING-CONE	
32	WR743774	2	BEARING-CUP	
33	6530360	1	BUMPER-RUBBER	
34	6565947	1	CAP-SPROCKET,END AXLE	
35	6617316	1	COVER-UPPER	
36	6617472	1	SUPPORT-JACKSHAFT	
37	6618845	1	SPROCKET-12 TOOTH	
38	6634761	1	VENT-AIR	
39	6656492	1	CAP-CHAINCASE	
40	6658413	1	CHAIN-ENDLESS	
41	6658752	1	BEARING	
42	6800398	1	SUPPORT-OUT JACKSHAFT	
43	6801208	13	BOLT-WHEEL	
44	6802726	1	HOUSING-MACH	
45	6803541	1	HUB ASSY-WHEEL	SEE PAGE 5-1
46	6803572	27	BOLT-WHEEL	
47	507512D1	1	CHAINCASE WLDMT- 4655 RH	
48	514261D1	1	WASHER-AXLE SPROCKET	
49	WR55784	AR	SHIM	

Copyright © 2007 AGCO Corporation

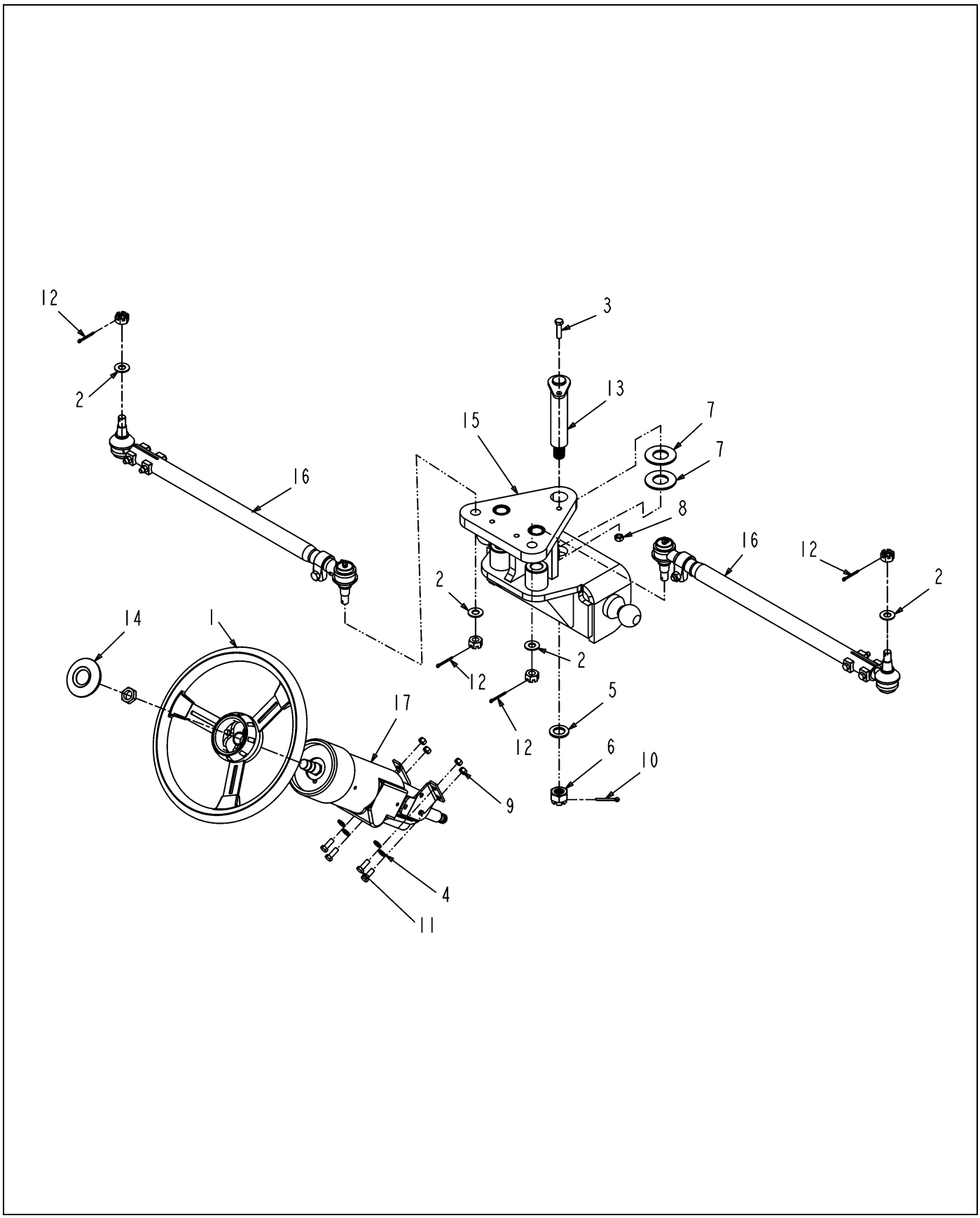

123127-C.TIF

Copyright © 2007 AGCO Corporation

STEERING GRP - WF,80 IN

ITEM	PART #	QTY	DESCRIPTION	COMMENTS
1	WR28944	1	STEERING WHEEL-#1634D3P	
2	WR50857	4	WASHER-FLAT,HRD 5/8	
3	WR55047	1	SCREW-CAP HEX M10 X 40	
4	WR55075	4	WASHER-FL,M10,ZN,REG	
5	WR55079	1	WASHER-PLAIN,24MM ID,LC,	
6	WR55168	1	NUT-CASTLE,24MM X 3.00	
7	WR55198	2	WASHER-PLAIN HRD,1 3/8 ID	
8	WR55272	5	NUT-LOCK,M10 X 1.5,PREV	
9	WR55366	4	NUT-TOPLOCK, 3/8-16UNC,	
10	WR55400	1	PIN-COTTER,5MM X 40MM	
11	AG550175	4	BOLT 0.37-16NCX 1.00 G5 ZN HHD	
12	AG553972	4	PIN COTTER 0.15X1.50 ZN	
13	6597793	1	SHAFT W/A	
14	6660827	1	BUTTON-HORN	
15	WR39074	1	PLATE-W/A,STEERING	
16	WR39080	2	TIE ROD ASM-3440-80	SEE PAGE 5-2
17	WR55654	1	STEERING COLUMN#9204218	SEE PAGE 8-4

Copyright © 2007 AGCO Corporation

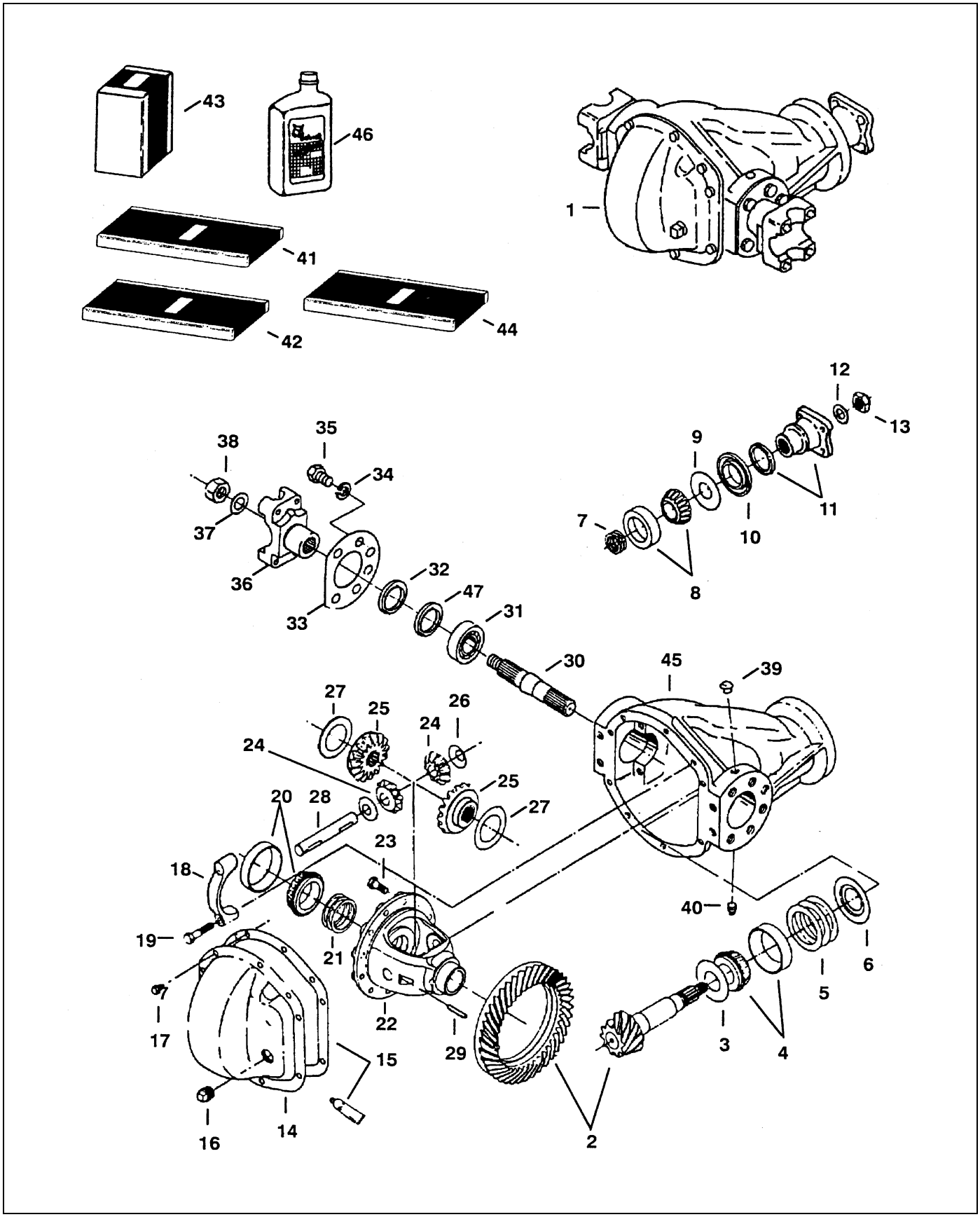

6672337.TIF

Copyright © 2007 AGCO Corporation

ITEM	PART #	QTY	DESCRIPTION	COMMENTS
2	6672169	1	DRIVE GEAR KIT	
3	6658265	1	SLINGER	
4	6634581	1	BEARING	
6	6658264	1	BAFFLE	
8	6634583	1	BEARING	
9	6662807	1	SLINGER	
10	6662808	1	SEAL	
11	6633096	1	YOKE	
12	6634586	1	WASHER	
13	6634143	1	NUT	
14	6662811	1	COVER	
15	6662810	1	SEALANT	
16	6598452	1	PLUG	
17	6634145	12	SCREW	
19	6598849	2	BOLT	
20	6634589	1	BEARING	
23	6662814	10	BOLT	
29	6662815	1	LOCK	
30	6662816	2	SHAFT	
31	6662817	2	BEARING	
32	6662818	2	SEAL	
33	6662819	2	RETAINER	
34	AG550450	12	WASHER 0.62 LK ZN REG	
35	WR10193	2	SCREW-CAP HEX 5/8 NC X	
36	6672998	2	YOKE	
37	6598455	2	WASHER	
38	6598445	2	NUT	
39	6662821	1	VENT	
40	5208547B	1	PLUG	
41	6662813	1	SHIM KIT	
42	6672170	1	SHIM KIT	
43	6648975	1	KIT	
44	6648976	1	KIT	
45	6662804	1	HOUSING	
46	6665754	1.500	OIL-GEAR	
47	6667935	1	DIFFERNENTIAL	
	FOOTNOTE		ITEMS 5 & 7 CANNOT BE PURCHASED INDIVIDUALLY BUT ARE INCLUDED IN SHIM KIT 42.	
	FOOTNOTE		ITEM 18 CANNOT BE PURCHASED INDIVIDUALLY BUT IS INCLUDED IN THE DIFFERENTIAL.	
	FOOTNOTE		ITEM 21 CANNOT BE PURCHASED INDIVIDUALLY BUT IS INCLUDED IN THE DIFFERENTIAL KIT.	
	FOOTNOTE		ITEM 22 CANNOT BE PURCHASED INDIVIDUALLY BUT IS INCLUDED IN THE DIFFERENTIAL KIT.	
	FOOTNOTE		ITEMS 24-28 CANNOT BE PURCHASED INDIVIDUALLY BUT ARE INCLUDED IN THE HOUSING.	

Copyright © 2007 AGCO Corporation

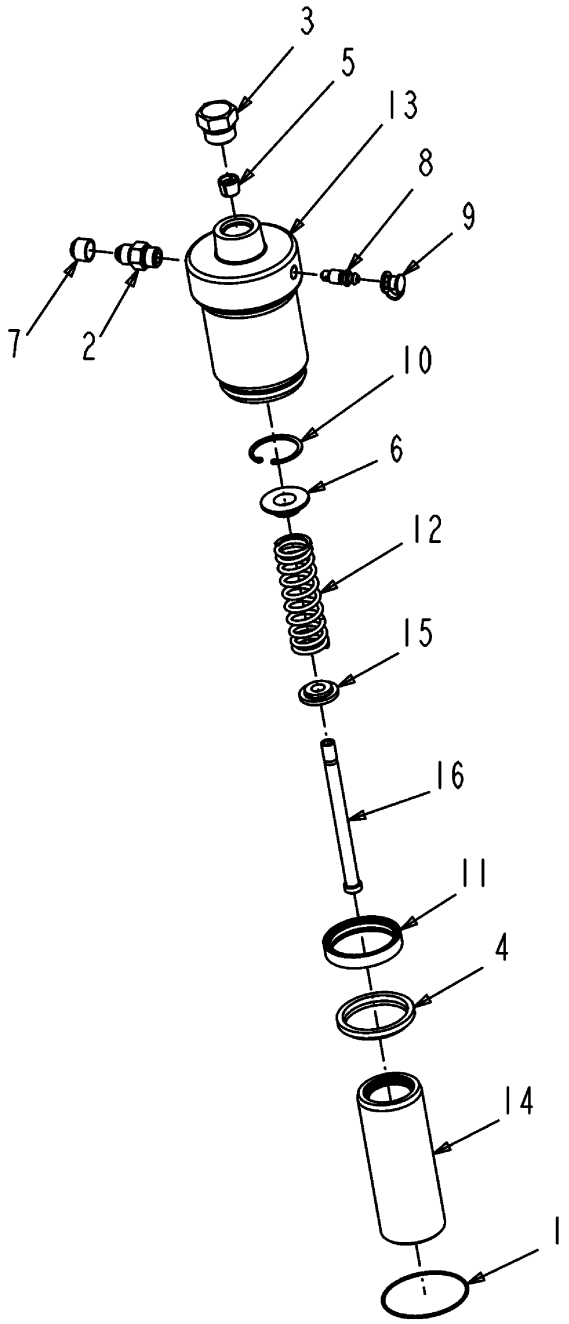

6800721-D-1.TIF

Copyright © 2007 AGCO Corporation

CYLINDER ASSY-BRAKE

ITEM	PART #	QTY	DESCRIPTION	COMMENTS
1	WR55424	1	O RING-2.375 ID	
2	AG560693	1	ADAP STR 0.37MO-R X 0.37MJIC	
3	AG561310	1	PLUG 0.62MO-R HEX	
4	1657089	1	ROD-SCRAPER,WIPER	
5	3739149	1	COLLETS(33173108)	
6	6593359	1	BUSHING-BACKUP,O-RING	
7	6598937	1	PLUG-FITTING	
8	6645812	1	SCREW-BLEEDER	
9	6652943	1	COVER-GREASE	
10	6669713	1	RING-SNAP	
11	6669744	1	SEAL-ROD	
12	6800713	1	SRING-CYL,BRAKE	
13	6800714	1	HOUSING-CYL,BRAKE	
14	6800715	1	PISTON-CYL,BRAKE	
15	6800716	1	WASHER-SPRING	
16	6800717	1	PIN-CLEVIS	

Copyright © 2007 AGCO Corporation

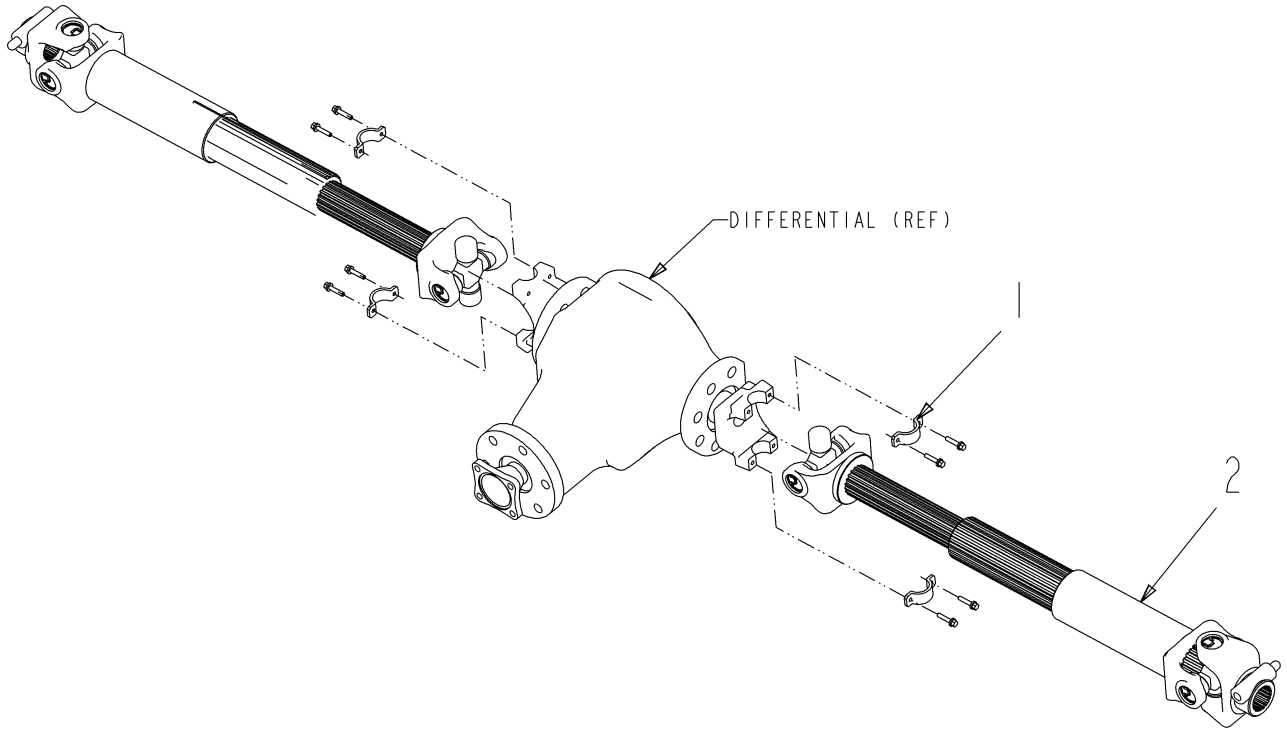

7001735-02-M989-.TIF

Copyright © 2007 AGCO Corporation

ITEM	PART #	QTY	DESCRIPTION	COMMENTS
1	WR55933	2	DRIVESHAFT-80/101INCH	[A] SEE PAGE 3-15
	FOOTNOTE [A]		WR55939 IS THE MALE HALF SHAFT.	
	FOOTNOTE [A]		WR131457 IS THE FEMALE HALF SHAFT.	

Copyright © 2007 AGCO Corporation

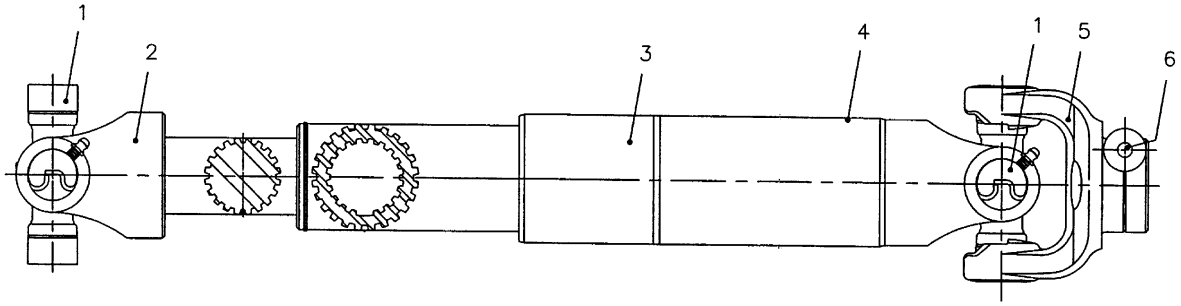

WR55933.TIF

Copyright © 2007 AGCO Corporation

ITEM	PART #	QTY	DESCRIPTION	COMMENTS
REF	WR55939	1	SHAFT ASSY-MALE	
REF	WR55939	1	SHAFT ASSY-MALE	
1	6664353	2	CROSS BEARING	
2	WR55937	1	SHAFT-YOKE FEMALE	
3	WR55940	1	RING-RETAINER	
4	WR55936	1	SHAFT YOKE FEMALE	
5	6672512	1	YOKE	
6	6662097	1	PIN W/SPRING	
	FOOTNOTE		WR55939 IS THE MALE HALF SHAFT.	
	FOOTNOTE		WR131457 IS THE FEMALE HALF SHAFT.	

Copyright © 2007 AGCO Corporation

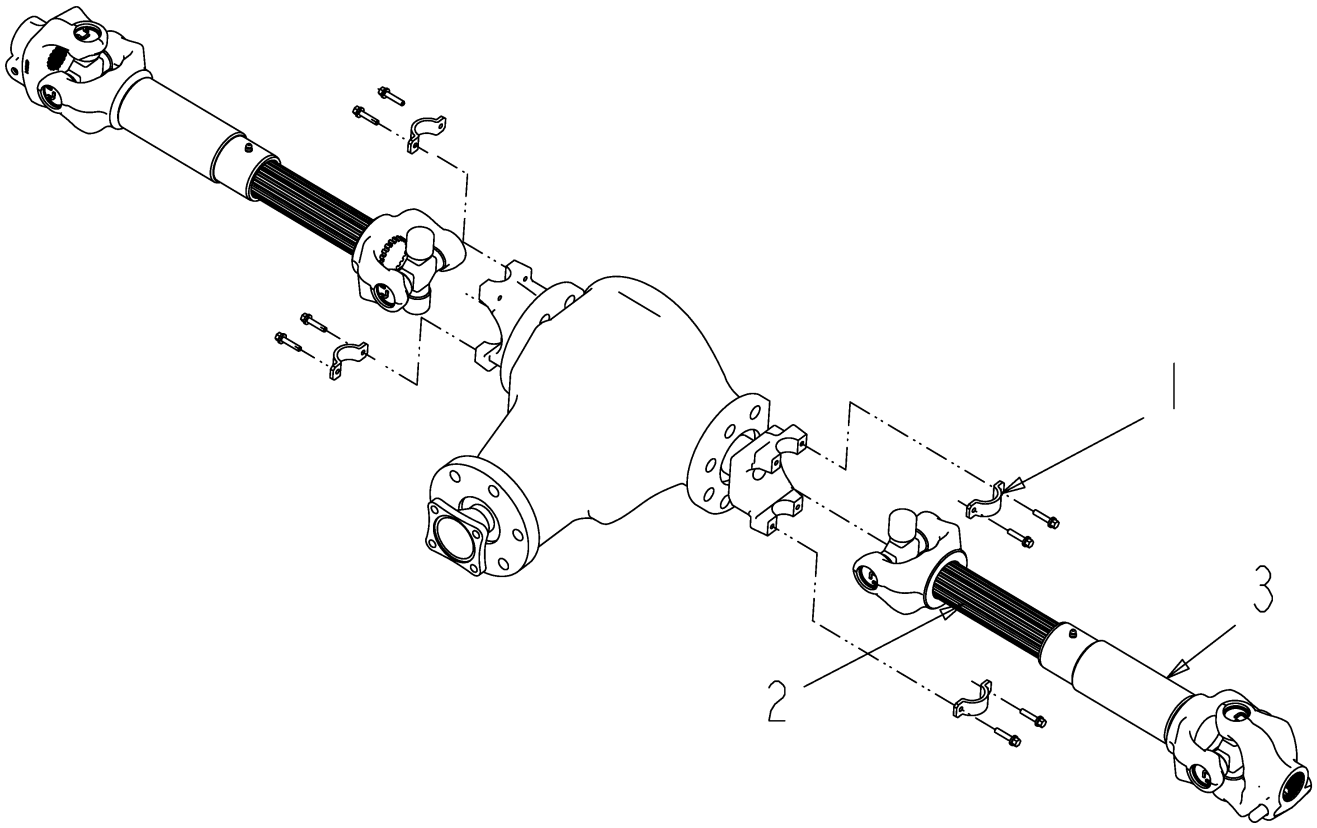

514566D1-01-N817-.TIF

Copyright © 2007 AGCO Corporation

DRIVESHAFT INSTL- 80-88 IN

ITEM	PART #	QTY	DESCRIPTION	COMMENTS
1	WR121071	2	STRAP KIT-1350/1410	
2	AG516064	AR	ANTI SEIZE	
3	514544D1	2	DRIVESHAFT ASM-80-88 IN	

Copyright © 2007 AGCO Corporation

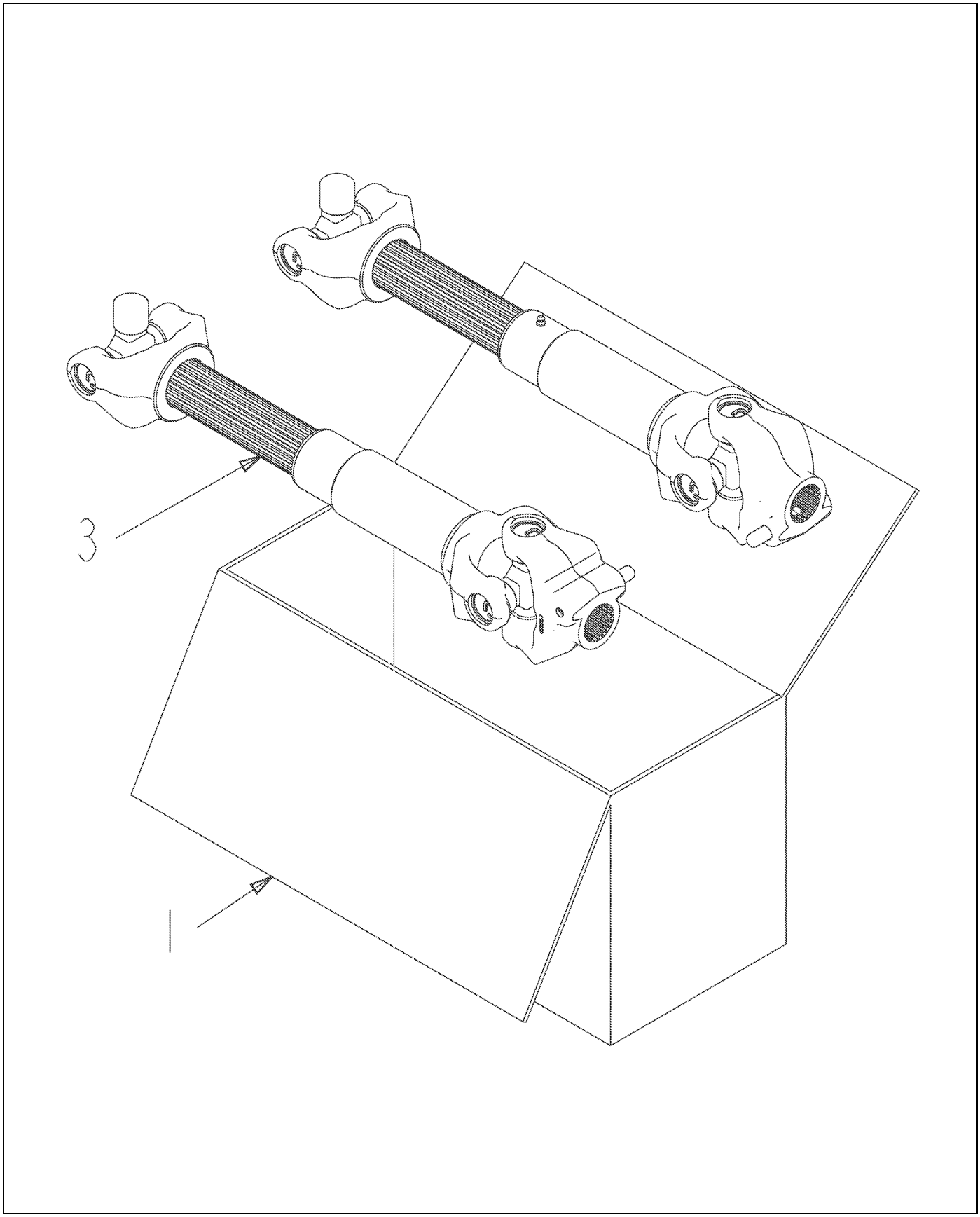

514749D1-01-N817-.TIF

Copyright © 2007 AGCO Corporation

FA-DRIVESHAFT, 80-88 IN

ITEM	PART #	QTY	DESCRIPTION	COMMENTS
1	6610264	1	BOX-CARDBOARD	
2	507916D1	1	BAG-SHIPPING	
3	514544D1	2	DRIVESHAFT ASM-80-88 IN	

Copyright © 2007 AGCO Corporation

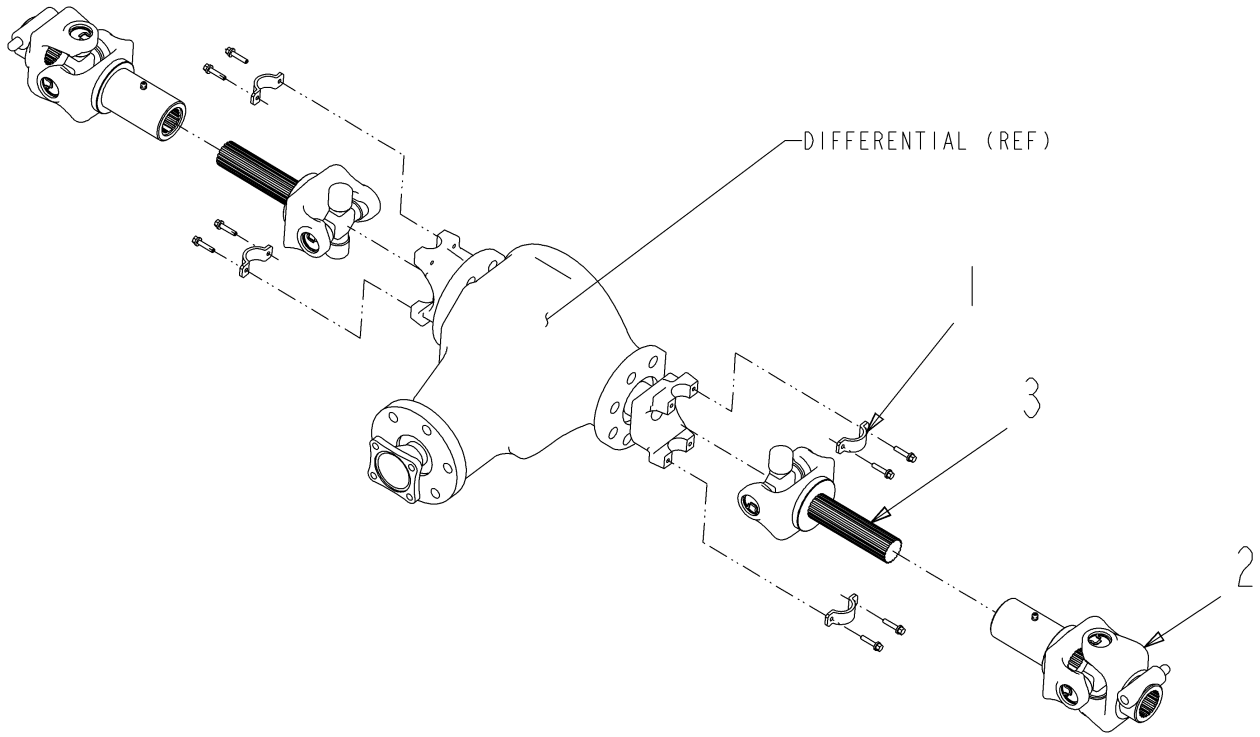

7001734-02-M989-.TIF

Copyright © 2007 AGCO Corporation

OPT-72 IN DRIVESHAFT

ITEM	PART #	QTY	DESCRIPTION	COMMENTS
1	6673303	2	DRIVESHAFT-72INCH,FE	
2	6673306	2	DRIVESHAFT-72INCH,MA	

Copyright © 2007 AGCO Corporation

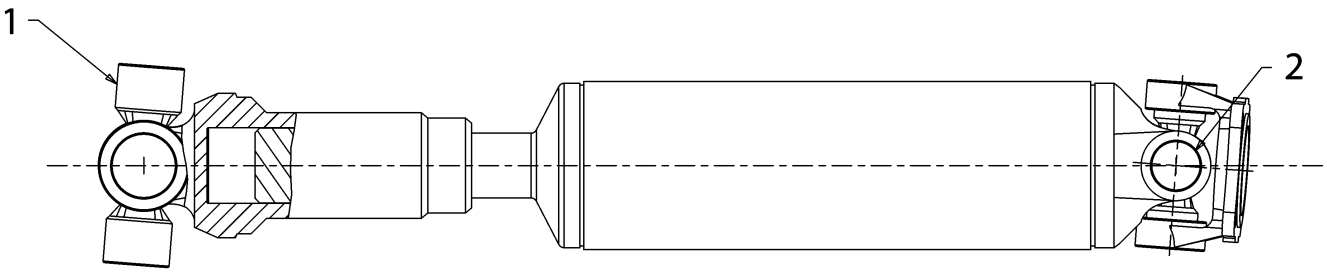

127615.TIF

Copyright © 2007 AGCO Corporation

DRIVESHAFT, AUTO ALLISON

ITEM	PART #	QTY	DESCRIPTION	COMMENTS
1	AG602310	1	KIT CROSS & BRGS SPICER (P)	
2	AG515892	1	U-JOINT	

Copyright © 2007 AGCO Corporation

FRAME ASSY	4-1
FRAME ASSY	4-2
FRAME-ADJ REAR	4-3
FRAME-ADJ REAR	4-4
FRAME-ADJ REAR	4-5
CHANNEL ASSY	4-6
CHANNEL ASSY	4-7
FOOTBOARD INSTL-4450 AT	4-8
FOOTBOARD INSTL-4450 AT	4-9
FOOTBOARD INSTL-4650 AT	4-10
FOOTBOARD INSTL-4650 AT	4-11
FTBOARD GRP-W/O BM REST,4450AT	4-12
FTBOARD GRP-W/O BM REST,4650AT	4-13
FOOTBOARD INSTL - 4450 AT	4-14
FOOTBOARD INSTL - 4450 AT	4-15
FOOTBOARD INSTL - 4650 AT	4-16
FOOTBOARD INSTL - 4650 AT	4-17
FTBOARD GRP-W/O BM REST,4450AT	4-18
FTBOARD GRP-W/O BM REST,4650AT	4-19
FRAME INSTL-4000A7	4-20
FRAME INSTL-4000A8	4-21
SHIELD INSTL-BELT	4-22
HITCH-INSTL	4-23

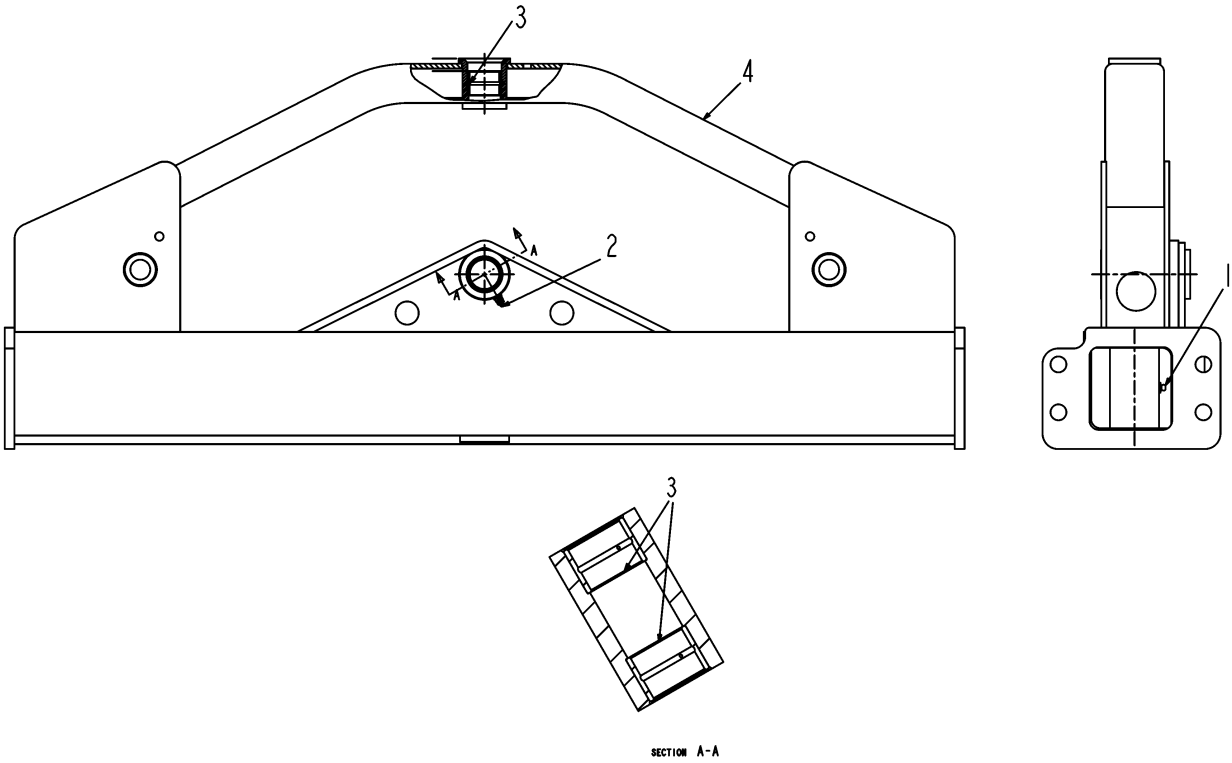

6595398-G-4.TIF

Copyright © 2007 AGCO Corporation

FRAME ASSY

ITEM	PART #	QTY	DESCRIPTION	COMMENTS
1	AG550280	2	FITTING LUB.12-27NPTFX0.68	
2	AG562551	1	ZERK 45D 0.125 NPT	
3	AG711273	3	PORRINGTON NEEDLE BEARING	
4	6595399	1	FRAME-W/A	

Copyright © 2007 AGCO Corporation

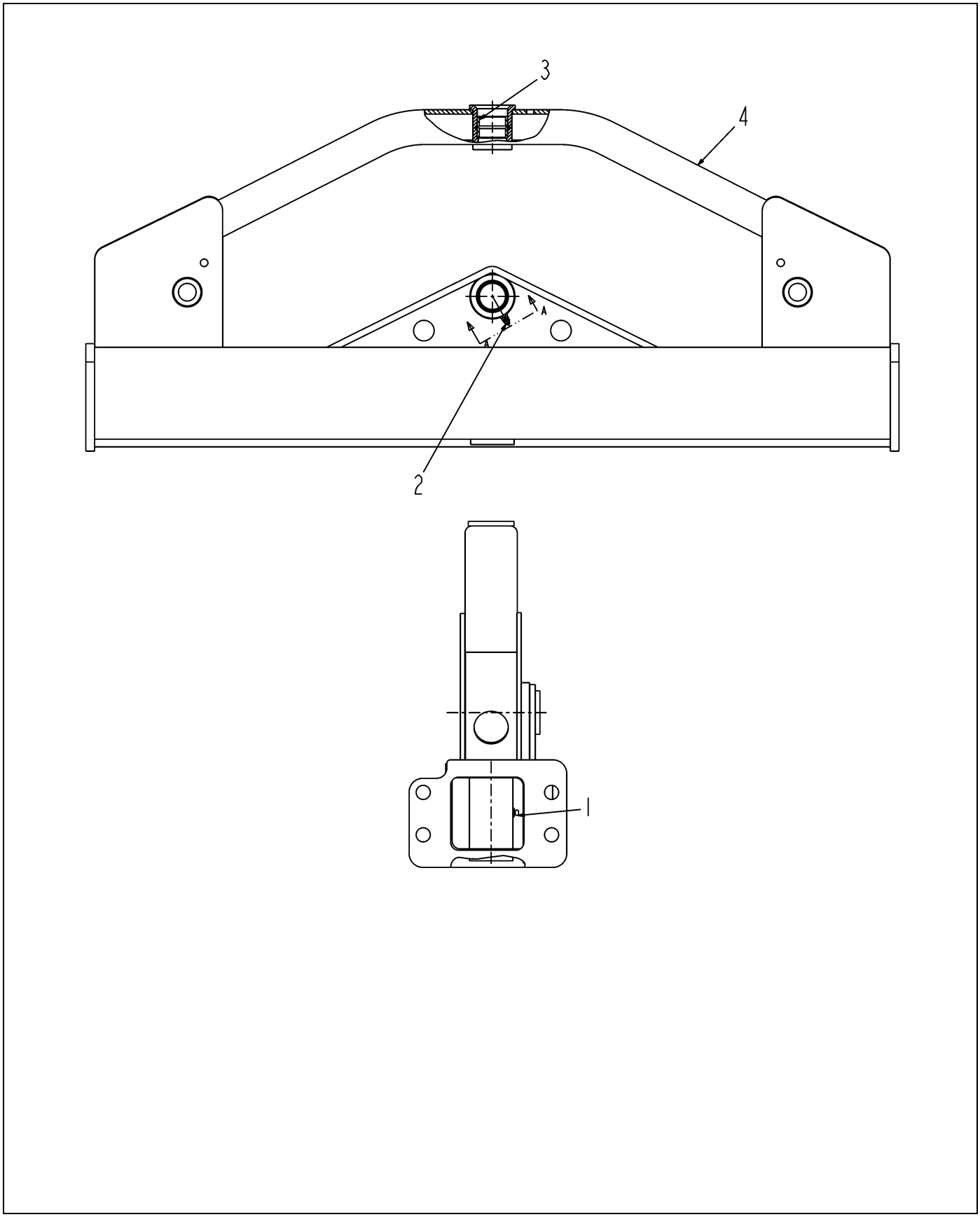

6595456.TIF

Copyright © 2007 AGCO Corporation

FRAME ASSY

ITEM	PART #	QTY	DESCRIPTION	COMMENTS
1	AG550280	2	FITTING LUB.12-27NPTFX0.68	
2	AG562551	1	ZERK 45D 0.125 NPT	
3	AG711273	3	PORRINGTON NEEDLE BEARING	
4	6595455	1	FRAME-W/A 72 IN	

Copyright © 2007 AGCO Corporation

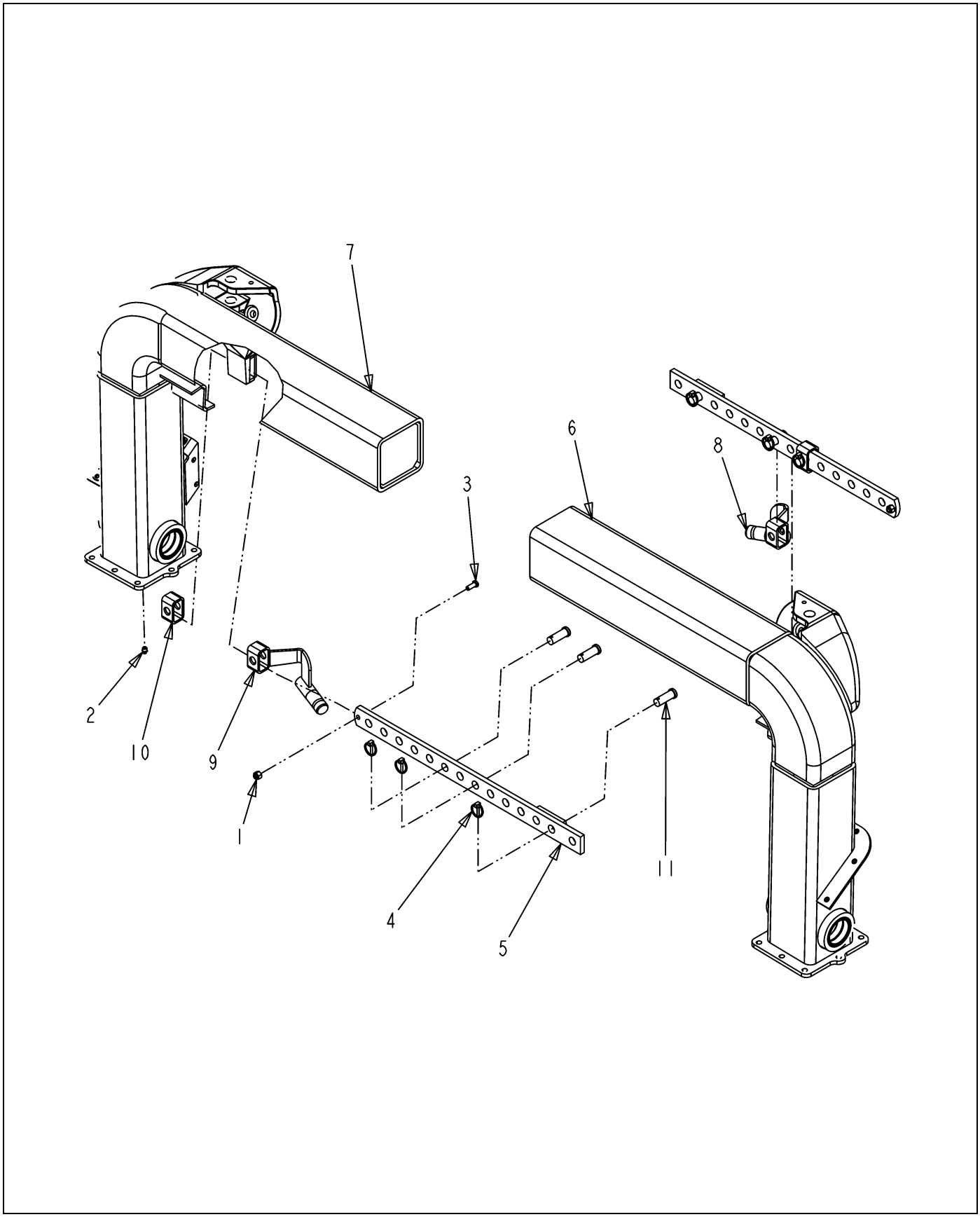

123124-A.TIF

Copyright © 2007 AGCO Corporation

FRAME-ADJ REAR

ITEM	PART #	QTY	DESCRIPTION	COMMENTS
1	WR55272	2	NUT-LOCK,M10 X 1.5,PREV	
2	AG550280	2	FITTING LUB.12-27NPTFX0.68	
3	AG561683	2	BOLT M10-1.5 X 25MM G8.8 ZN HH	
4	6649706	6	PIN-LYNCH,3/16	
5	WR39098	2	LINK W/A, AXLE ADJUST	
6	WR55671	1	ADJ FRAME LH WLDMT	
7	WR55672	1	ADJ FRAME RH WLDMT	
8	WR55969	1	STOP W/A LH	
9	WR55970	1	STOP W/A RH	
10	WR55971	2	STOP	
11	WR55974	6	PIN-CLEVIS	

Copyright © 2007 AGCO Corporation

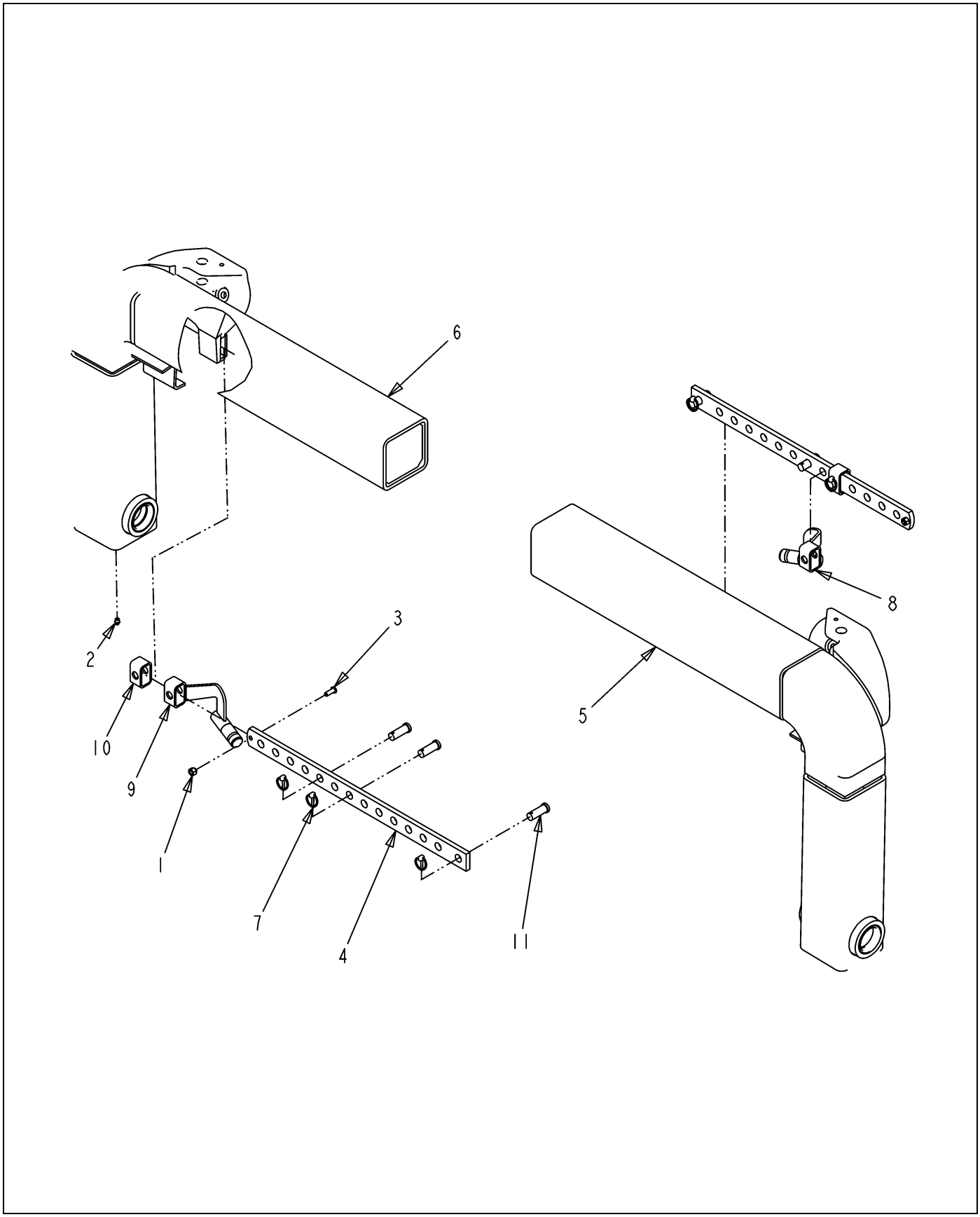

123125-A.TIF

Copyright © 2007 AGCO Corporation

FRAME-ADJ REAR

ITEM	PART #	QTY	DESCRIPTION	COMMENTS
1	WR55272	2	NUT-LOCK,M10 X 1.5,PREV	
2	AG550280	2	FITTING LUB.12-27NPTFX0.68	
3	AG561683	2	BOLT M10-1.5 X 25MM G8.8 ZN HH	
4	6627540	2	LINK-AXLE,ADJ	
5	6627679	1	ADJ FRAME LH WLDMT	
6	6627680	1	ADJ FRAME RH WLDMT	
7	6649706	6	PIN-LYNCH,3/16	
8	WR55969	1	STOP W/A LH	
9	WR55970	1	STOP W/A RH	
10	WR55971	2	STOP	
11	WR55974	6	PIN-CLEVIS	

Copyright © 2007 AGCO Corporation

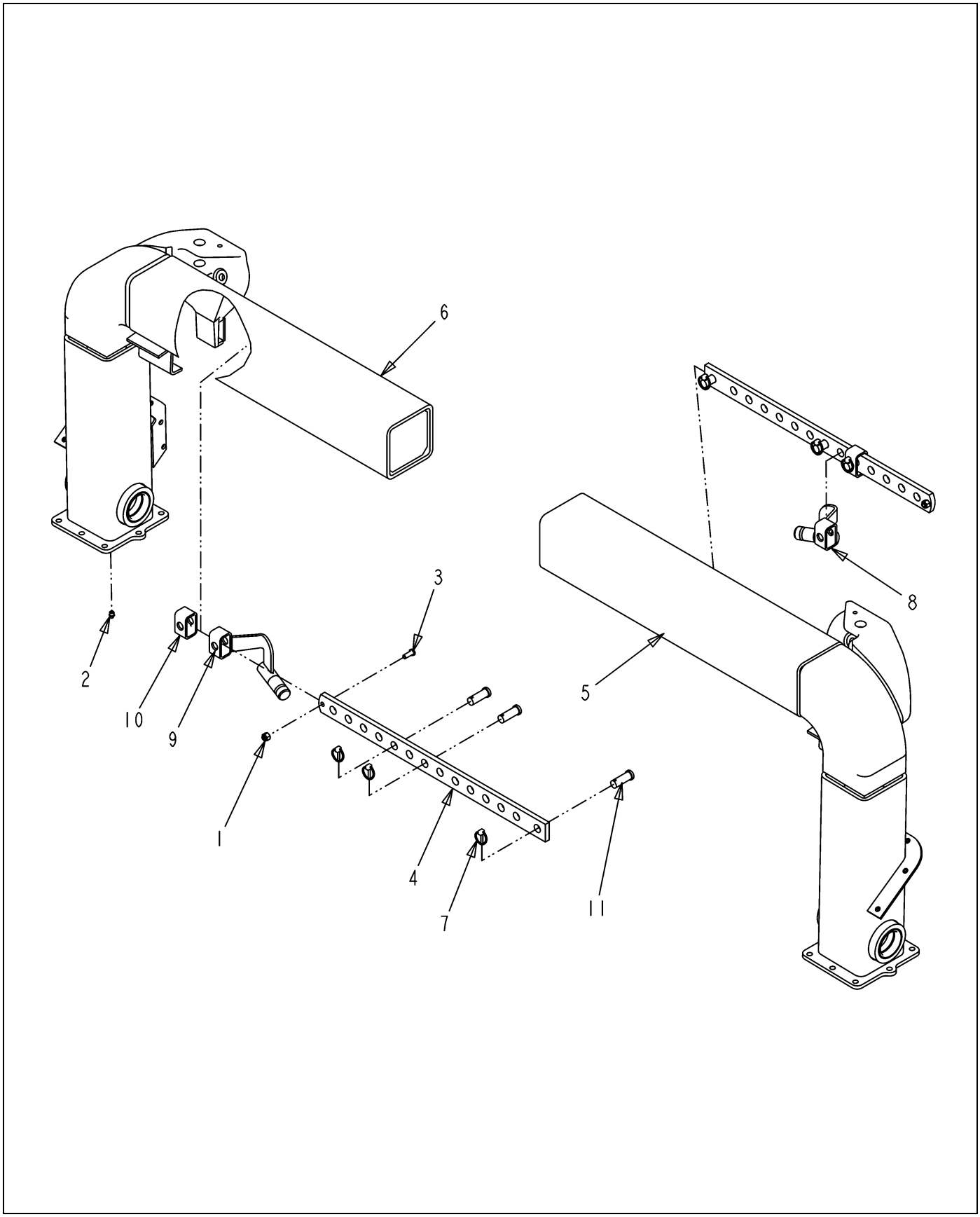

123126-A.TIF

Copyright © 2007 AGCO Corporation

FRAME-ADJ REAR

ITEM	PART #	QTY	DESCRIPTION	COMMENTS
1	WR55272	2	NUT-LOCK,M10 X 1.5,PREV	
2	AG550280	2	FITTING LUB.12-27NPTFX0.68	
3	AG561683	2	BOLT M10-1.5 X 25MM G8.8 ZN HH	
4	6627540	2	LINK-AXLE,ADJ	
5	6627561	1	ADJ FRAME LH WLDMT	
6	6627562	1	ADJ FRAME RH WLDMT	
7	6649706	6	PIN-LYNCH,3/16	
8	WR55969	1	STOP W/A LH	
9	WR55970	1	STOP W/A RH	
10	WR55971	2	STOP	
11	WR55974	6	PIN-CLEVIS	

Copyright © 2007 AGCO Corporation

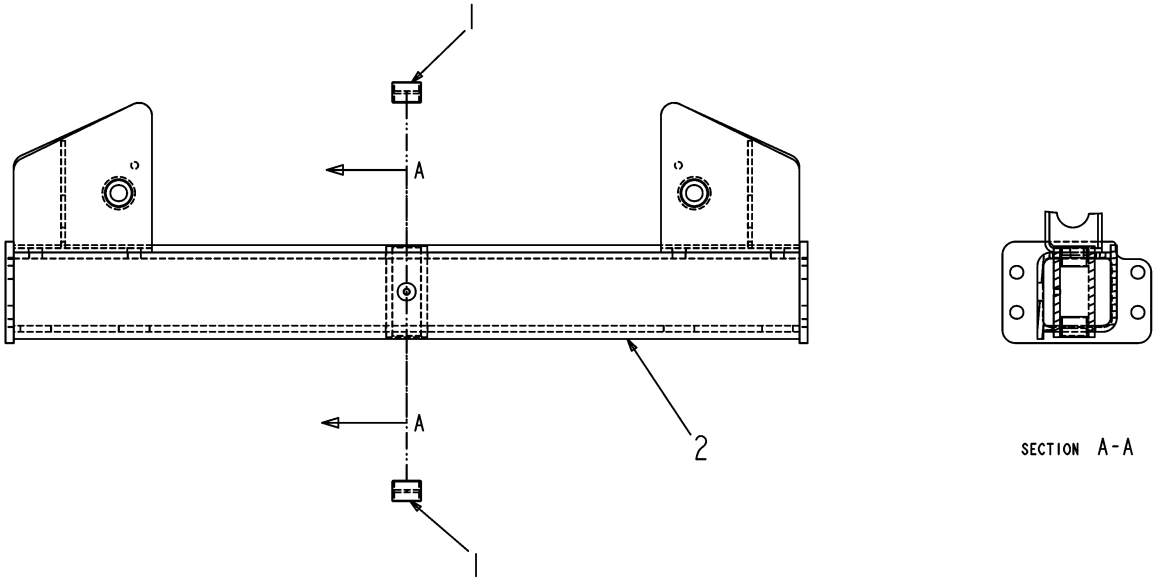

126433-A-1.TIF

Copyright © 2007 AGCO Corporation

CHANNEL ASSY

ITEM	PART #	QTY	DESCRIPTION	COMMENTS
1	AG711273	2	PORRINGTON NEEDLE BEARING	
2	6595400	1	CHANNEL-W/A	

Copyright © 2007 AGCO Corporation

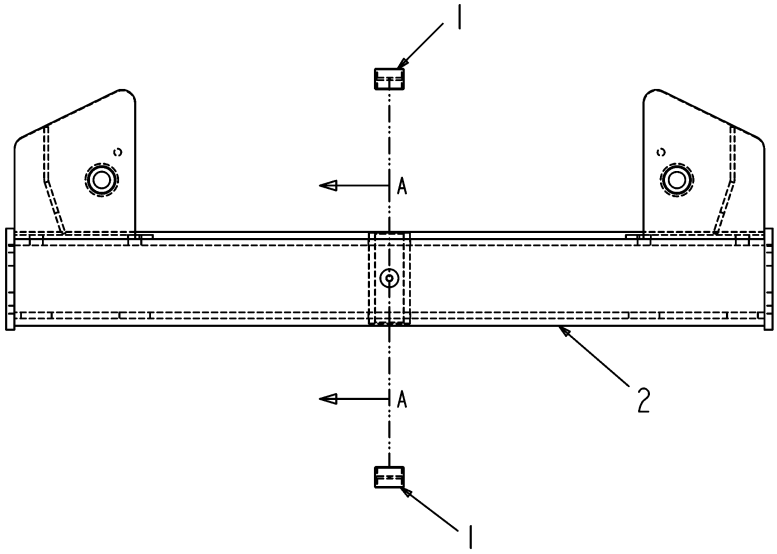

126434-A-1.TIF

Copyright © 2007 AGCO Corporation

CHANNEL ASSY

ITEM	PART #	QTY	DESCRIPTION	COMMENTS
1	AG711273	2	PORRINGTON NEEDLE BEARING	
2	6595454	1	CHANNEL-W/A	

Copyright © 2007 AGCO Corporation

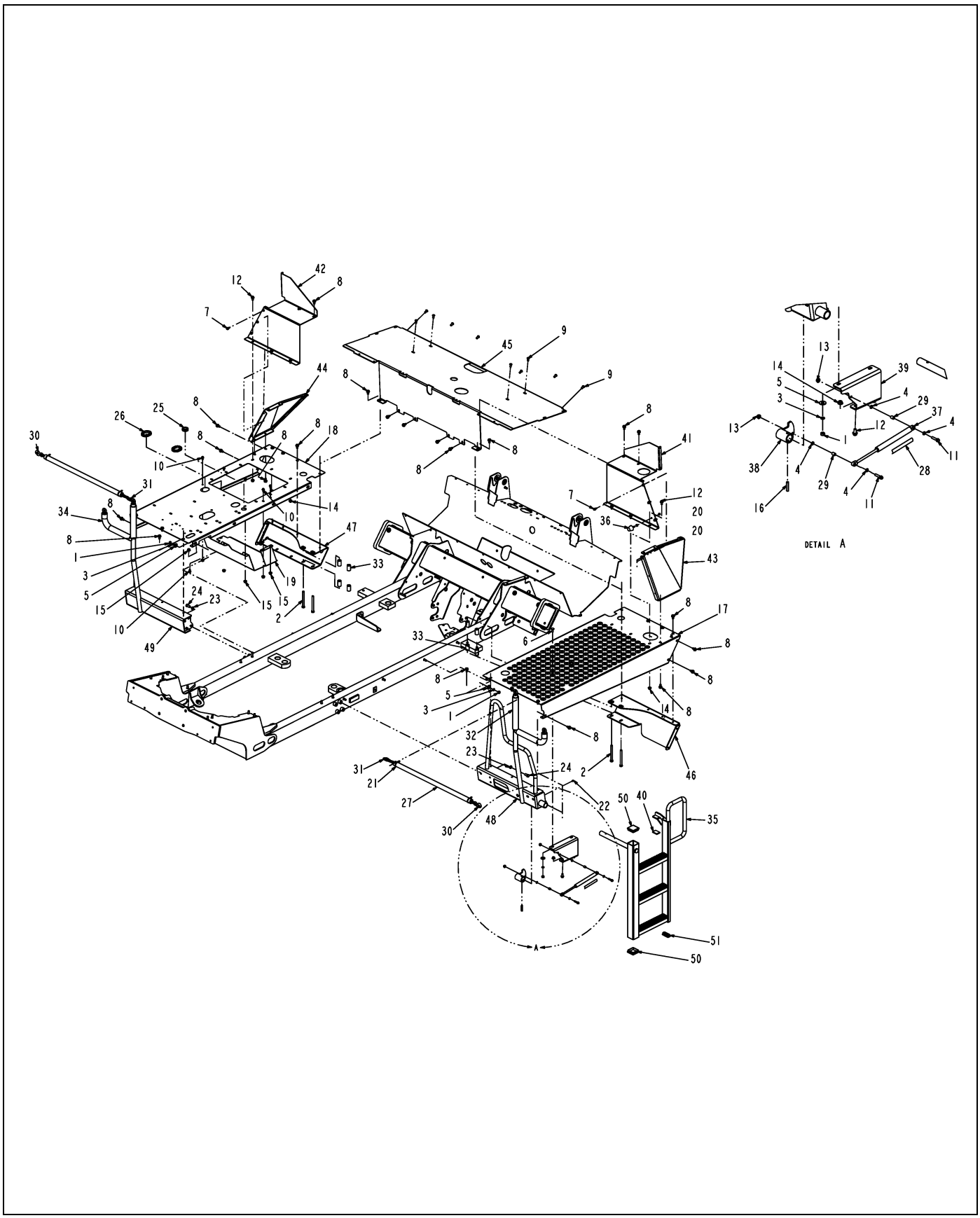

129455-06-N585-.TIF

Copyright © 2007 AGCO Corporation

FOOTBOARD INSTL-4450 AT

ITEM	PART #	QTY	DESCRIPTION	COMMENTS
1	WR50838	10	NUT-HEX,METRIC M10-1.5	
2	WR55063	4	SCREW-CAP HEX M12 X 130	
3	WR55106	10	WASHER-LOCK SPRING,10 MM	
4	WR55141	4	WASHER-STL,8MM ID	
5	WR55158	10	WASHER-FLAT,10MM ID,	
6	WR55173	2	BOLT-CARRIAGE,M10 X 25,	
7	WR55190	6	SCREW-CAP HEX M8 X 20,	
8	WR55191	32	HEX HEAD,THREAD ROLLING SCREW	
9	WR55192	10	SCREW-CAP SOCK M10 X 20,	
10	WR55205	6	SCREW-HEX FLG,M8X1.25X16 CL8.8	
11	WR55209	2	SCREW-HEX FLG,M8X1.25X35 CL8.8	
12	WR55214	8	SCREW-HEX FLG,M10X1.5X20 CL8.8	
13	WR55280	2	NUT-FLANGE,M8 X 1.25	
14	WR55281	8	NUT-FLANGE,M10 X 1.5	
15	WR55301	6	NUT-FLANGE,M10 X 1.5,PREV	
16	WR55402	1	PIN-STR COILED,3/8 X	
17	WR129520	1	FOOTBOARD-LH	
18	WR129521	1	FOOTBOARD-RH	
19	WR129728	1	SHIELD-OIL COOLER	
20	AG550213	2	NUT 0.31-18NC HEX ZN REG	
21	AG553557	AR	TIE CABLE 7.37 .06-1.37 BLACK	
22	AG561892	1	FITTING LUBE STR 0.25UNF	
23	AG562272	8	WASHER M12 LK ZN REG	
24	AG562375	8	BOLT M12-1.75X 25MM G8.8 ZN HH	
25	WR731972	1	GROMMET	
26	6533975	2	GROMMET	
27	6537416	2	COVER-HOSE	
28	6577754	1	DECAL-WARNING	
29	6588293	2	BUSHING	
30	6617897	2	CHAIN	
31	6626327	2	LINK-CONNECTOR	
32	6626353	2	HOSE-LH	
33	6626498	8	SPACER	
34	6626623	2	HOSE	
35	6627860	1	STEP,W/A	
36	6649040	1	BUMPER-RUBBER	
37	6669323	1	SPRING-GAS	
38	6800749	1	BUSHING-W/A	
39	6801521	1	MOUNT	
40	6801571	1	PAD-RUBBER	
41	6801823	1	COVER-TANK	
42	6801824	1	COVER-TANK	
43	6801825	1	PLATE-SIDE LH	
44	6801826	1	PLATE-SIDE RH	
45	6801829	1	SUPPORT-TOP	
46	6801849	1	BRACKET-W/A,LH	
47	6801850	1	BRACKET-W/A,RH	
48	6803702	1	SUPPORT-W/A,LH	
49	6803703	1	SUPPORT-W/A,RH	
50	401348X1	2	PLUG-TUBE END,POLY,2.5 SQ	

Copyright © 2007 AGCO Corporation

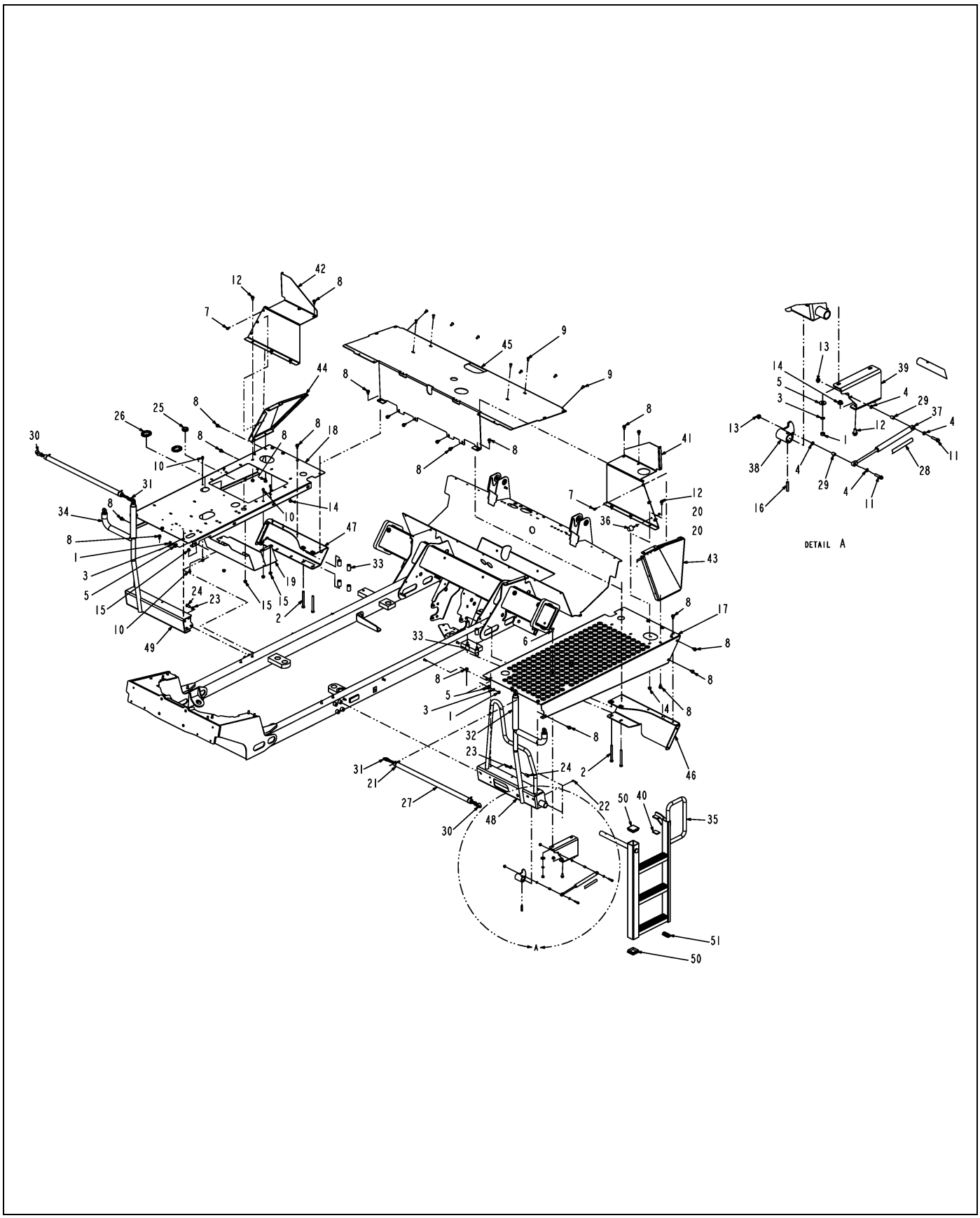

129455-06-N585-.TIF

Copyright © 2007 AGCO Corporation

FOOTBOARD INSTL-4450 AT

ITEM	PART #	QTY	DESCRIPTION	COMMENTS
51	401349X1	1	PLUG-TUBE END,POLY,1X2.5	

Copyright © 2007 AGCO Corporation

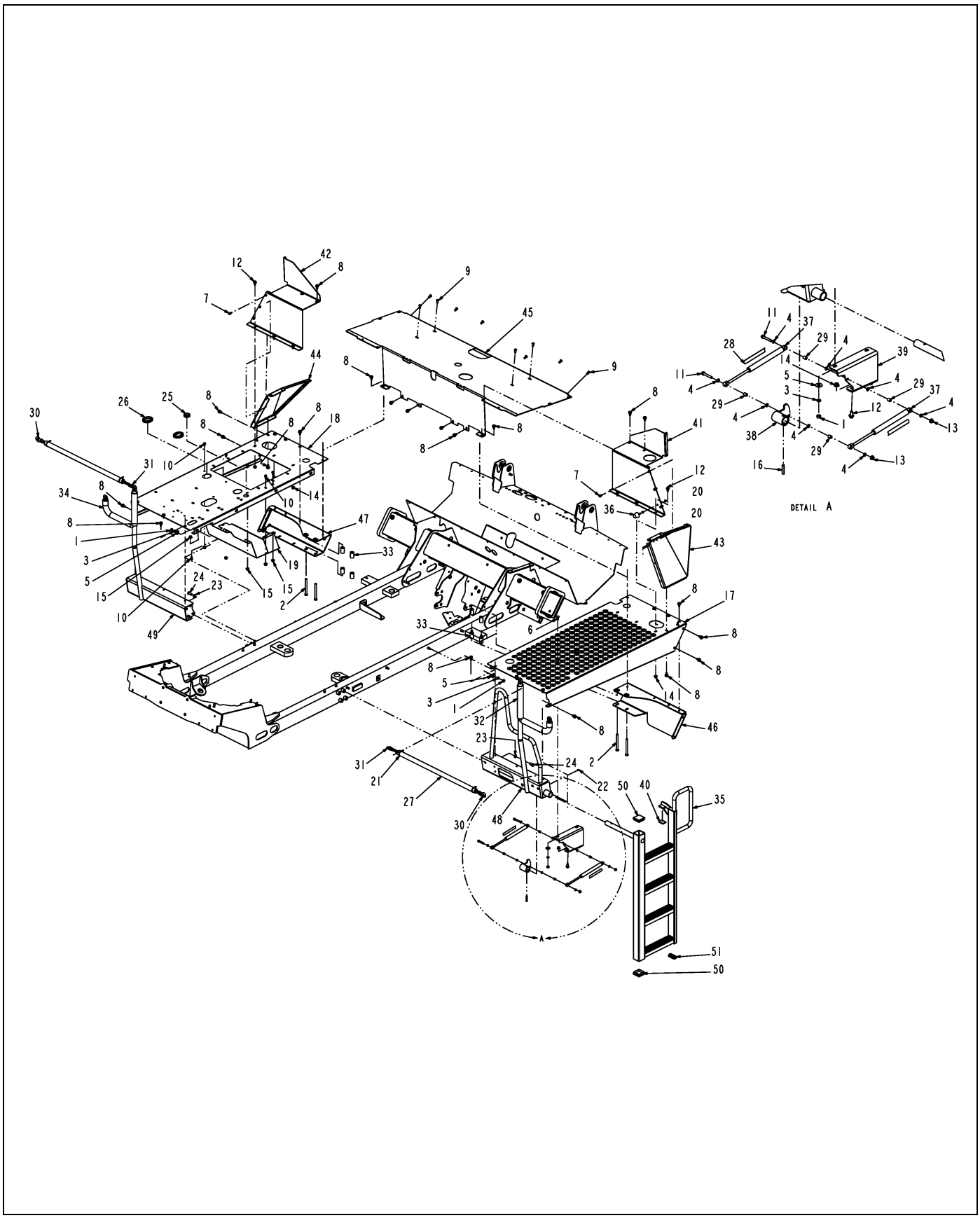

129470-05-N585-.TIF

Copyright © 2007 AGCO Corporation

FOOTBOARD INSTL-4650 AT

ITEM	PART #	QTY	DESCRIPTION	COMMENTS
1	WR50838	10	NUT-HEX,METRIC M10-1.5	
2	WR55063	4	SCREW-CAP HEX M12 X 130	
3	WR55106	10	WASHER-LOCK SPRING,10 MM	
4	WR55141	8	WASHER-STL,8MM ID	
5	WR55158	10	WASHER-FLAT,10MM ID,	
6	WR55173	2	BOLT-CARRIAGE,M10 X 25,	
7	WR55190	6	SCREW-CAP HEX M8 X 20,	
8	WR55191	32	HEX HEAD,THREAD ROLLING SCREW	
9	WR55192	10	SCREW-CAP SOCK M10 X 20,	
10	WR55205	6	SCREW-HEX FLG,M8X1.25X16 CL8.8	
11	WR55210	2	SCREW-HEX FLG,M8X1.25X50 CL8.8	
12	WR55214	8	SCREW-HEX FLG,M10X1.5X20 CL8.8	
13	WR55280	2	NUT-FLANGE,M8 X 1.25	
14	WR55281	8	NUT-FLANGE,M10 X 1.5	
15	WR55301	6	NUT-FLANGE,M10 X 1.5,PREV	
16	WR55402	1	PIN-STR COILED,3/8 X	
17	WR129520	1	FOOTBOARD-LH	
18	WR129521	1	FOOTBOARD-RH	
19	WR129728	1	SHIELD-OIL COOLER	
20	AG550213	2	NUT 0.31-18NC HEX ZN REG	
21	AG553557	AR	TIE CABLE 7.37 .06-1.37 BLACK	
22	AG561892	1	FITTING LUBE STR 0.25UNF	
23	AG562272	8	WASHER M12 LK ZN REG	
24	AG562375	8	BOLT M12-1.75X 25MM G8.8 ZN HH	
25	WR731972	1	GROMMET	
26	6533975	2	GROMMET	
27	6537416	2	COVER-HOSE	
28	6577754	2	DECAL-WARNING	
29	6588293	4	BUSHING	
30	6617897	2	CHAIN	
31	6626327	2	LINK-CONNECTOR	
32	6626353	2	HOSE-LH	
33	6626498	8	SPACER	
34	6626623	2	HOSE	
35	6627859	1	STEP-W/A	
36	6649040	1	BUMPER-RUBBER	
37	6669323	2	SPRING-GAS	
38	6800749	1	BUSHING-W/A	
39	6801521	1	MOUNT	
40	6801571	1	PAD-RUBBER	
41	6801823	1	COVER-TANK	
42	6801824	1	COVER-TANK	
43	6801825	1	PLATE-SIDE LH	
44	6801826	1	PLATE-SIDE RH	
45	6801829	1	SUPPORT-TOP	
46	6801849	1	BRACKET-W/A,LH	
47	6801850	1	BRACKET-W/A,RH	
48	6803702	1	SUPPORT-W/A,LH	
49	6803703	1	SUPPORT-W/A,RH	
50	401348X1	2	PLUG-TUBE END,POLY,2.5 SQ	

Copyright © 2007 AGCO Corporation

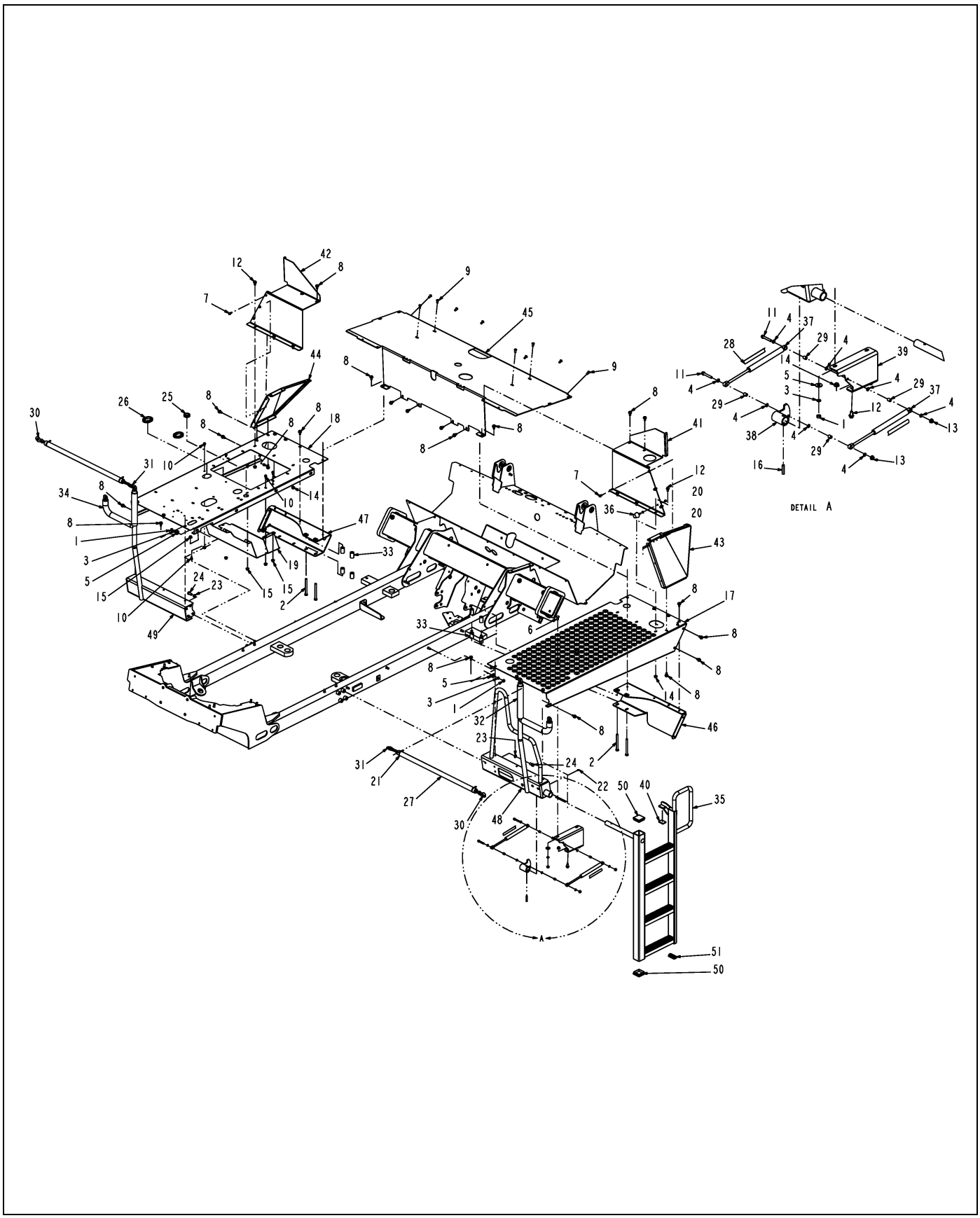

129470-05-N585-.TIF

Copyright © 2007 AGCO Corporation

FOOTBOARD INSTL-4650 AT

ITEM	PART #	QTY	DESCRIPTION	COMMENTS
51	401349X1	1	PLUG-TUBE END,POLY,1X2.5	

Copyright © 2007 AGCO Corporation

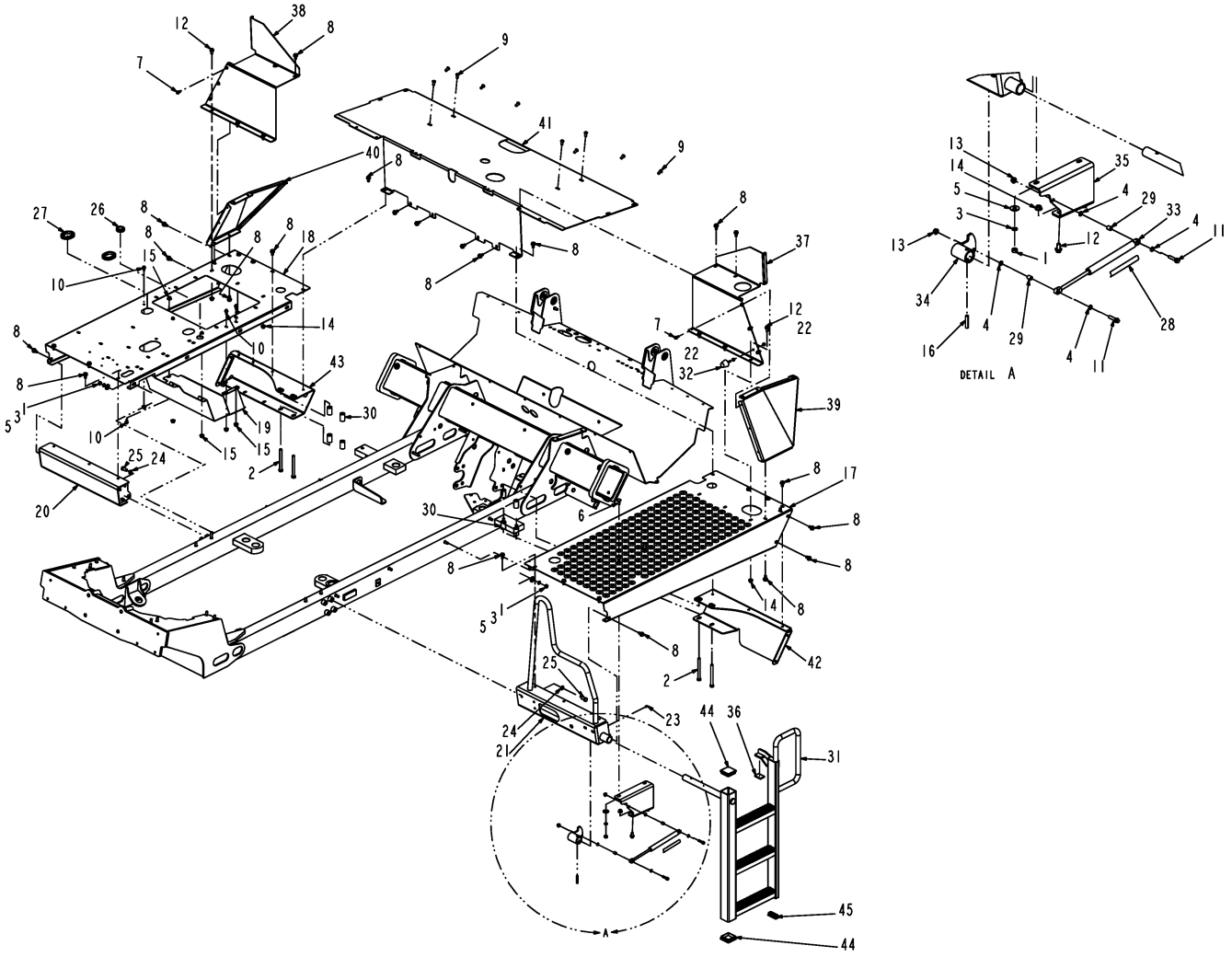

132682-04-N585-.TIF

Copyright © 2007 AGCO Corporation

FTBOARD GRP-W/O BM REST,4450AT

ITEM	PART #	QTY	DESCRIPTION	COMMENTS
1	WR50838	10	NUT-HEX,METRIC M10-1.5	
2	WR55063	4	SCREW-CAP HEX M12 X 130	
3	WR55106	10	WASHER-LOCK SPRING,10 MM	
4	WR55141	4	WASHER-STL,8MM ID	
5	WR55158	10	WASHER-FLAT,10MM ID,	
6	WR55173	2	BOLT-CARRIAGE,M10 X 25,	
7	WR55190	6	SCREW-CAP HEX M8 X 20,	
8	WR55191	32	HEX HEAD,THREAD ROLLING SCREW	
9	WR55192	10	SCREW-CAP SOCK M10 X 20,	
10	WR55205	6	SCREW-HEX FLG,M8X1.25X16 CL8.8	
11	WR55209	2	SCREW-HEX FLG,M8X1.25X35 CL8.8	
12	WR55214	8	SCREW-HEX FLG,M10X1.5X20 CL8.8	
13	WR55280	2	NUT-FLANGE,M8 X 1.25	
14	WR55281	8	NUT-FLANGE,M10 X 1.5	
15	WR55301	6	NUT-FLANGE,M10 X 1.5,PREV	
16	WR55402	1	PIN-STR COILED,3/8 X	
17	WR129520	1	FOOTBOARD-LH	
18	WR129521	1	FOOTBOARD-RH	
19	WR129728	1	SHIELD-OIL COOLER	
20	WR132678	1	SUPPORT WLDMT-FOOTBOARD,RH	
21	WR132679	1	SUPPORT WLDMT-FOOTBOARD,LH	
22	AG550213	2	NUT 0.31-18NC HEX ZN REG	
23	AG561892	1	FITTING LUBE STR 0.25UNF	
24	AG562272	8	WASHER M12 LK ZN REG	
25	AG562375	8	BOLT M12-1.75X 25MM G8.8 ZN HH	
26	WR731972	1	GROMMET	
27	6533975	2	GROMMET	
28	6577754	1	DECAL-WARNING	
29	6588293	2	BUSHING	
30	6626498	8	SPACER	
31	6627860	1	STEP,W/A	
32	6649040	1	BUMPER-RUBBER	
33	6669323	1	SPRING-GAS	
34	6800749	1	BUSHING-W/A	
35	6801521	1	MOUNT	
36	6801571	1	PAD-RUBBER	
37	6801823	1	COVER-TANK	
38	6801824	1	COVER-TANK	
39	6801825	1	PLATE-SIDE LH	
40	6801826	1	PLATE-SIDE RH	
41	6801829	1	SUPPORT-TOP	
42	6801849	1	BRACKET-W/A,LH	
43	6801850	1	BRACKET-W/A,RH	
44	401348X1	2	PLUG-TUBE END,POLY,2.5 SQ	
45	401349X1	1	PLUG-TUBE END,POLY,1X2.5	

Copyright © 2007 AGCO Corporation

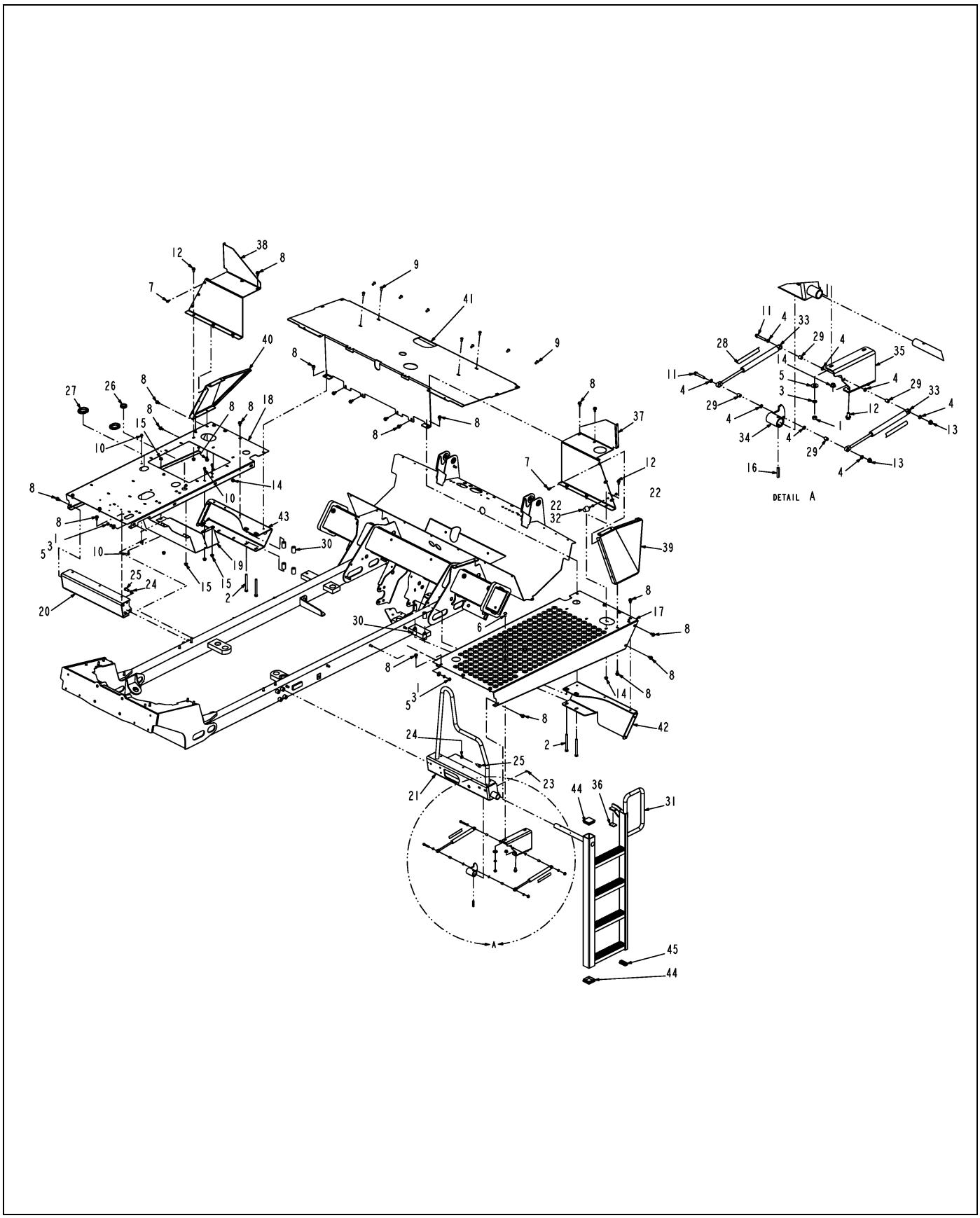

132683-03-N585-.TIF

Copyright © 2007 AGCO Corporation

FTBOARD GRP-W/O BM REST,4650AT

ITEM	PART #	QTY	DESCRIPTION	COMMENTS
1	WR50838	10	NUT-HEX,METRIC M10-1.5	
2	WR55063	4	SCREW-CAP HEX M12 X 130	
3	WR55106	10	WASHER-LOCK SPRING,10 MM	
4	WR55141	8	WASHER-STL,8MM ID	
5	WR55158	10	WASHER-FLAT,10MM ID,	
6	WR55173	2	BOLT-CARRIAGE,M10 X 25,	
7	WR55190	6	SCREW-CAP HEX M8 X 20,	
8	WR55191	32	HEX HEAD,THREAD ROLLING SCREW	
9	WR55192	10	SCREW-CAP SOCK M10 X 20,	
10	WR55205	6	SCREW-HEX FLG,M8X1.25X16 CL8.8	
11	WR55210	2	SCREW-HEX FLG,M8X1.25X50 CL8.8	
12	WR55214	8	SCREW-HEX FLG,M10X1.5X20 CL8.8	
13	WR55280	2	NUT-FLANGE,M8 X 1.25	
14	WR55281	8	NUT-FLANGE,M10 X 1.5	
15	WR55301	6	NUT-FLANGE,M10 X 1.5,PREV	
16	WR55402	1	PIN-STR COILED,3/8 X	
17	WR129520	1	FOOTBOARD-LH	
18	WR129521	1	FOOTBOARD-RH	
19	WR129728	1	SHIELD-OIL COOLER	
20	WR132678	1	SUPPORT WLDMT-FOOTBOARD,RH	
21	WR132679	1	SUPPORT WLDMT-FOOTBOARD,LH	
22	AG550213	2	NUT 0.31-18NC HEX ZN REG	
23	AG561892	1	FITTING LUBE STR 0.25UNF	
24	AG562272	8	WASHER M12 LK ZN REG	
25	AG562375	8	BOLT M12-1.75X 25MM G8.8 ZN HH	
26	WR731972	1	GROMMET	
27	6533975	2	GROMMET	
28	6577754	2	DECAL-WARNING	
29	6588293	4	BUSHING	
30	6626498	8	SPACER	
31	6627859	1	STEP-W/A	
32	6649040	1	BUMPER-RUBBER	
33	6669323	2	SPRING-GAS	
34	6800749	1	BUSHING-W/A	
35	6801521	1	MOUNT	
36	6801571	1	PAD-RUBBER	
37	6801823	1	COVER-TANK	
38	6801824	1	COVER-TANK	
39	6801825	1	PLATE-SIDE LH	
40	6801826	1	PLATE-SIDE RH	
41	6801829	1	SUPPORT-TOP	
42	6801849	1	BRACKET-W/A,LH	
43	6801850	1	BRACKET-W/A,RH	
44	401348X1	2	PLUG-TUBE END,POLY,2.5 SQ	
45	401349X1	1	PLUG-TUBE END,POLY,1X2.5	

Copyright © 2007 AGCO Corporation

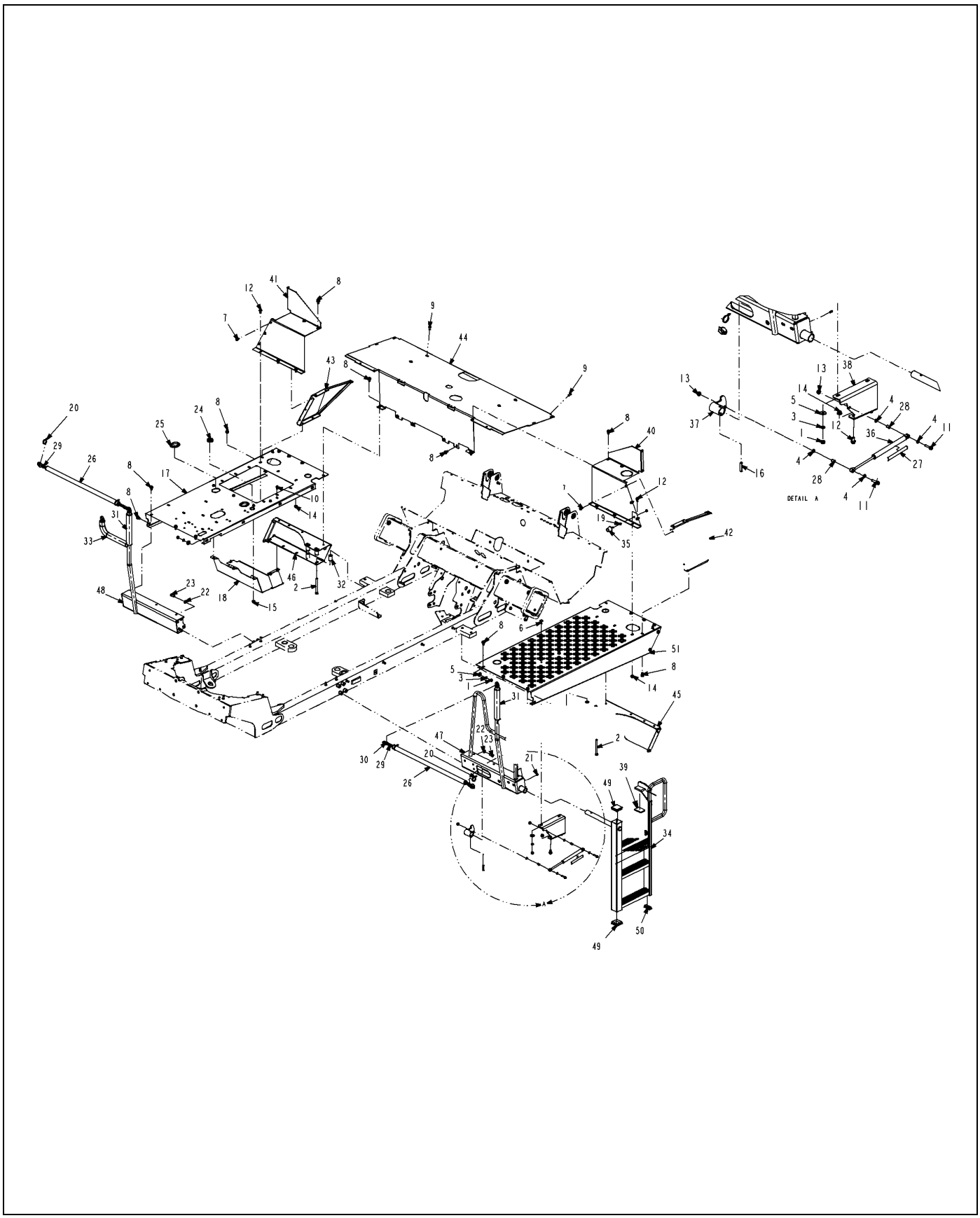

519523D1-01-R510-.TIF

Copyright © 2007 AGCO Corporation

FOOTBOARD INSTL - 4450 AT

ITEM	PART #	QTY	DESCRIPTION	COMMENTS
1	WR50838	10	NUT-HEX,METRIC M10-1.5	
2	WR55063	4	SCREW-CAP HEX M12 X 130	
3	WR55106	10	WASHER-LOCK SPRING,10 MM	
4	WR55141	4	WASHER-STL,8MM ID	
5	WR55158	10	WASHER-FLAT,10MM ID,	
6	WR55173	2	BOLT-CARRIAGE,M10 X 25,	
7	WR55190	6	SCREW-CAP HEX M8 X 20,	
8	WR55191	32	HEX HEAD,THREAD ROLLING SCREW	
9	WR55192	10	SCREW-CAP SOCK M10 X 20,	
10	WR55205	6	SCREW-HEX FLG,M8X1.25X16 CL8.8	
11	WR55209	2	SCREW-HEX FLG,M8X1.25X35 CL8.8	
12	WR55214	8	SCREW-HEX FLG,M10X1.5X20 CL8.8	
13	WR55280	2	NUT-FLANGE,M8 X 1.25	
14	WR55281	8	NUT-FLANGE,M10 X 1.5	
15	WR55301	6	NUT-FLANGE,M10 X 1.5,PREV	
16	WR55402	1	PIN-STR COILED,3/8 X	
17	WR129521	1	FOOTBOARD-RH	
18	WR129728	1	SHIELD-OIL COOLER	
19	AG550213	2	NUT 0.31-18NC HEX ZN REG	
20	AG553557	AR	TIE CABLE 7.37 .06-1.37 BLACK	
21	AG561892	1	FITTING LUBE STR 0.25UNF	
22	AG562272	8	WASHER M12 LK ZN REG	
23	AG562375	8	BOLT M12-1.75X 25MM G8.8 ZN HH	
24	WR731972	1	GROMMET	
25	6533975	2	GROMMET	
26	6537416	2	COVER-HOSE	
27	6577754	2	DECAL-WARNING	
28	6588293	2	BUSHING	
29	6617897	2	CHAIN	
30	6626327	2	LINK-CONNECTOR	
31	6626353	2	HOSE-LH	
32	6626498	8	SPACER	
33	6626623	2	HOSE	
35	6649040	1	BUMPER-RUBBER	
36	6669323	2	SPRING-GAS	
37	6800749	1	BUSHING-W/A	
38	6801521	1	MOUNT	
39	6801571	1	PAD-RUBBER	
40	6801823	1	COVER-TANK	
41	6801824	1	COVER-TANK	
42	6801825	1	PLATE-SIDE LH	
43	6801826	1	PLATE-SIDE RH	
44	6801829	1	SUPPORT-TOP	
45	6801849	1	BRACKET-W/A,LH	
46	6801850	1	BRACKET-W/A,RH	
47	6803702	1	SUPPORT-W/A,LH	
48	6803703	1	SUPPORT-W/A,RH	
49	401348X1	2	PLUG-TUBE END,POLY,2.5 SQ	
50	401349X1	1	PLUG-TUBE END,POLY,1X2.5	

Copyright © 2007 AGCO Corporation

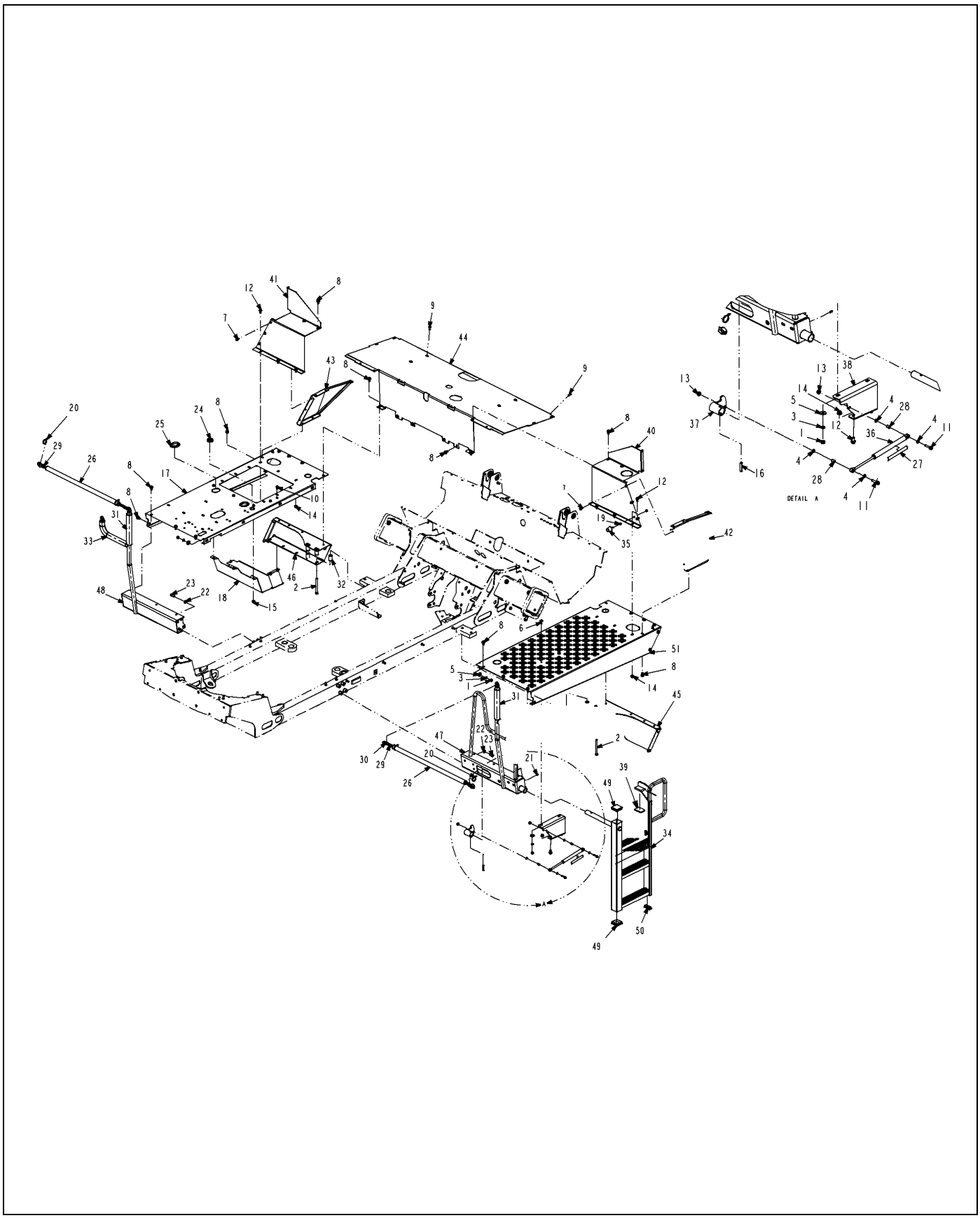

519523D1-01-R510-.TIF

Copyright © 2007 AGCO Corporation

FOOTBOARD INSTL - 4450 AT

ITEM	PART #	QTY	DESCRIPTION	COMMENTS
51	519024D1	1	FOOTBOARD-LH	

Copyright © 2007 AGCO Corporation

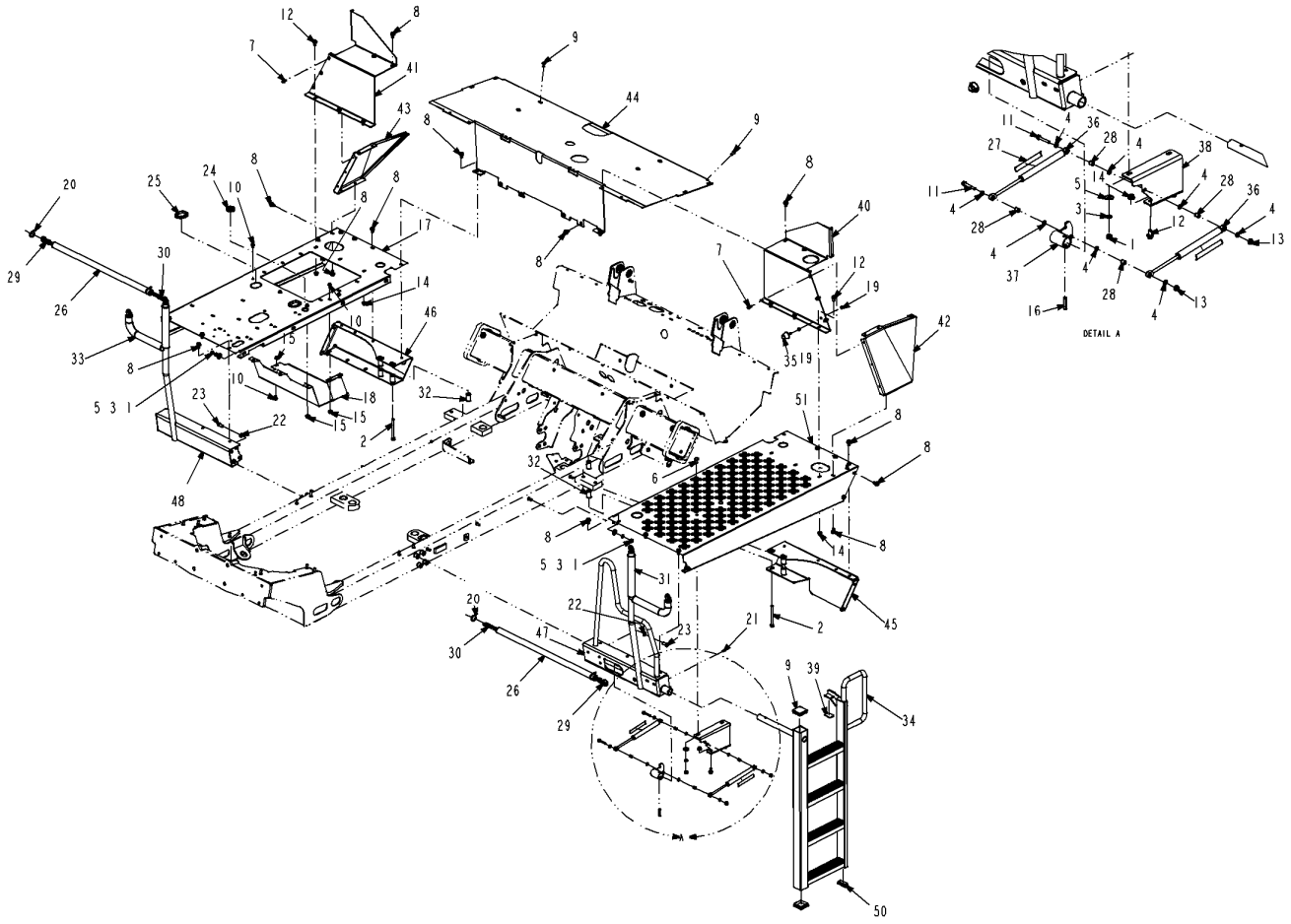

519524D1-01-R510-.TIF

Copyright © 2007 AGCO Corporation

FOOTBOARD INSTL - 4650 AT

ITEM	PART #	QTY	DESCRIPTION	COMMENTS
1	WR50838	10	NUT-HEX,METRIC M10-1.5	
2	WR55063	4	SCREW-CAP HEX M12 X 130	
3	WR55106	10	WASHER-LOCK SPRING,10 MM	
4	WR55141	4	WASHER-STL,8MM ID	
5	WR55158	10	WASHER-FLAT,10MM ID,	
6	WR55173	2	BOLT-CARRIAGE,M10 X 25,	
7	WR55190	6	SCREW-CAP HEX M8 X 20,	
8	WR55191	32	HEX HEAD,THREAD ROLLING SCREW	
9	WR55192	10	SCREW-CAP SOCK M10 X 20,	
10	WR55205	6	SCREW-HEX FLG,M8X1.25X16 CL8.8	
11	WR55210	2	SCREW-HEX FLG,M8X1.25X50 CL8.8	
12	WR55214	8	SCREW-HEX FLG,M10X1.5X20 CL8.8	
13	WR55280	2	NUT-FLANGE,M8 X 1.25	
14	WR55281	8	NUT-FLANGE,M10 X 1.5	
15	WR55301	6	NUT-FLANGE,M10 X 1.5,PREV	
16	WR55402	1	PIN-STR COILED,3/8 X	
17	WR129521	1	FOOTBOARD-RH	
18	WR129728	1	SHIELD-OIL COOLER	
19	AG550213	2	NUT 0.31-18NC HEX ZN REG	
20	AG553557	AR	TIE CABLE 7.37 .06-1.37 BLACK	
21	AG561892	1	FITTING LUBE STR 0.25UNF	
22	AG562272	8	WASHER M12 LK ZN REG	
23	AG562375	8	BOLT M12-1.75X 25MM G8.8 ZN HH	
24	WR731972	1	GROMMET	
25	6533975	2	GROMMET	
26	6537416	2	COVER-HOSE	
27	6577754	2	DECAL-WARNING	
28	6588293	2	BUSHING	
29	6617897	2	CHAIN	
30	6626327	2	LINK-CONNECTOR	
31	6626353	2	HOSE-LH	
32	6626498	8	SPACER	
33	6626623	2	HOSE	
35	6649040	1	BUMPER-RUBBER	
36	6669323	2	SPRING-GAS	
37	6800749	1	BUSHING-W/A	
38	6801521	1	MOUNT	
39	6801571	1	PAD-RUBBER	
40	6801823	1	COVER-TANK	
41	6801824	1	COVER-TANK	
42	6801825	1	PLATE-SIDE LH	
43	6801826	1	PLATE-SIDE RH	
44	6801829	1	SUPPORT-TOP	
45	6801849	1	BRACKET-W/A,LH	
46	6801850	1	BRACKET-W/A,RH	
47	6803702	1	SUPPORT-W/A,LH	
48	6803703	1	SUPPORT-W/A,RH	
50	401349X1	1	PLUG-TUBE END,POLY,1X2.5	
51	519024D1	1	FOOTBOARD-LH	

Copyright © 2007 AGCO Corporation

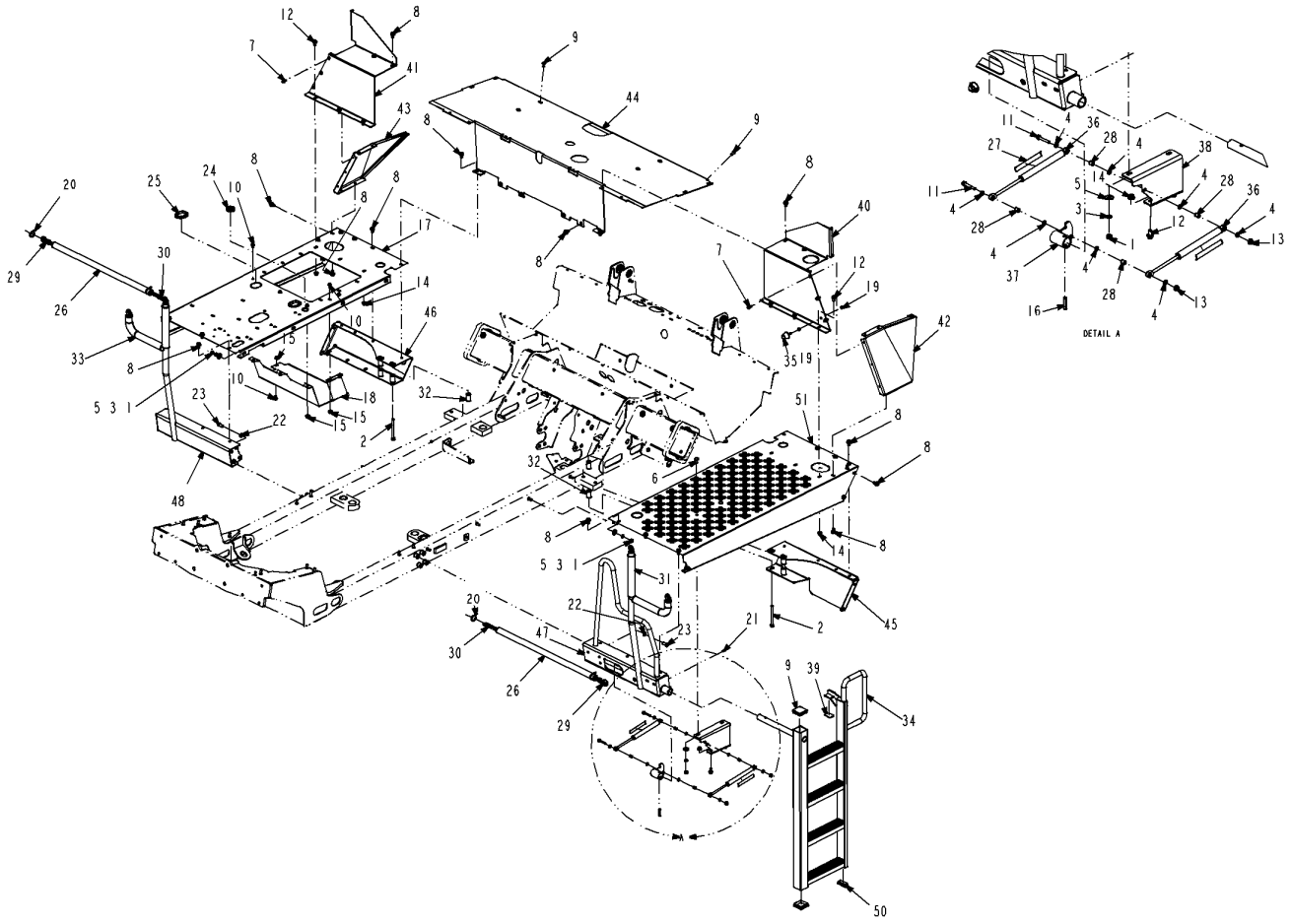

519524D1-01-R510-.TIF

Copyright © 2007 AGCO Corporation

FOOTBOARD INSTL - 4650 AT

ITEM	PART #	QTY	DESCRIPTION	COMMENTS
49	401348X1	2	PLUG-TUBE END,POLY,2.5 SQ	

Copyright © 2007 AGCO Corporation

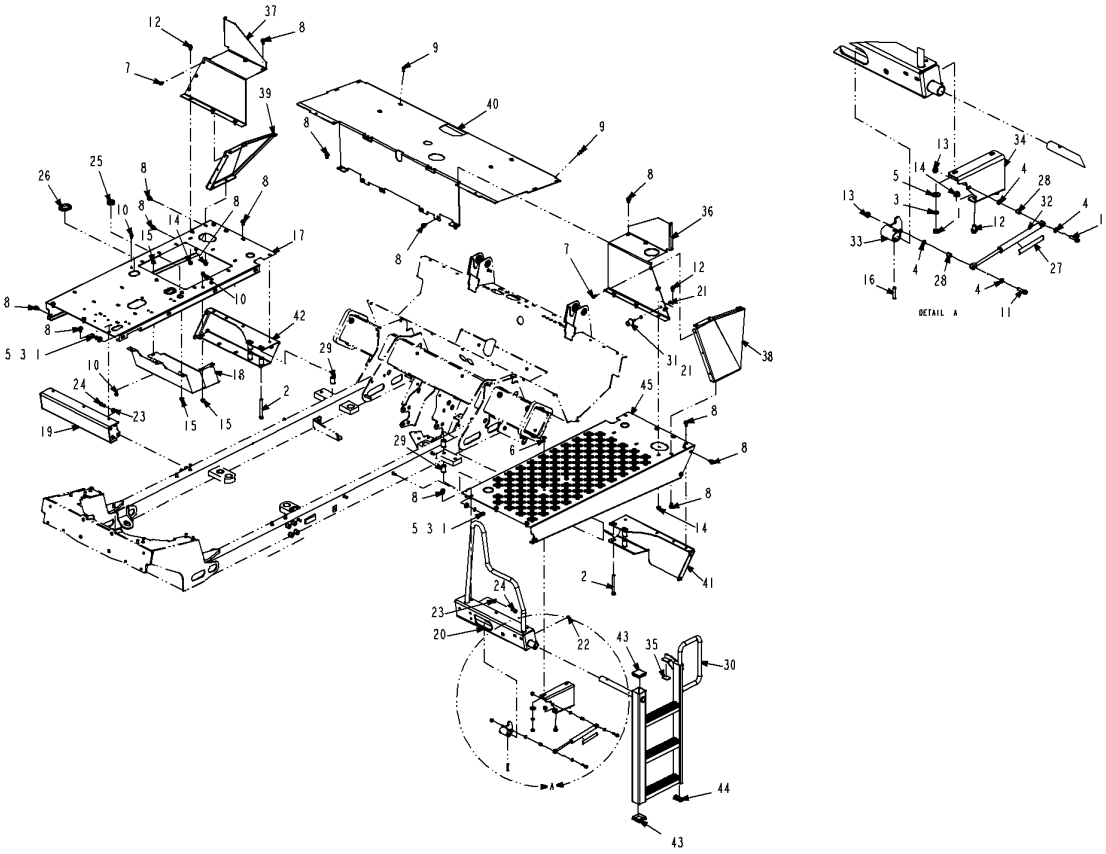

519525D1-01-R510-.TIF

Copyright © 2007 AGCO Corporation

FTBOARD GRP-W/O BM REST,4450AT

ITEM	PART #	QTY	DESCRIPTION	COMMENTS
1	WR50838	10	NUT-HEX,METRIC M10-1.5	
2	WR55063	4	SCREW-CAP HEX M12 X 130	
3	WR55106	10	WASHER-LOCK SPRING,10 MM	
4	WR55141	4	WASHER-STL,8MM ID	
5	WR55158	10	WASHER-FLAT,10MM ID,	
6	WR55173	2	BOLT-CARRIAGE,M10 X 25,	
7	WR55190	6	SCREW-CAP HEX M8 X 20,	
8	WR55191	32	HEX HEAD,THREAD ROLLING SCREW	
9	WR55192	10	SCREW-CAP SOCK M10 X 20,	
10	WR55205	6	SCREW-HEX FLG,M8X1.25X16 CL8.8	
11	WR55209	2	SCREW-HEX FLG,M8X1.25X35 CL8.8	
12	WR55214	8	SCREW-HEX FLG,M10X1.5X20 CL8.8	
13	WR55280	2	NUT-FLANGE,M8 X 1.25	
14	WR55281	8	NUT-FLANGE,M10 X 1.5	
15	WR55301	6	NUT-FLANGE,M10 X 1.5,PREV	
16	WR55402	1	PIN-STR COILED,3/8 X	
17	WR129521	1	FOOTBOARD-RH	
18	WR129728	1	SHIELD-OIL COOLER	
19	WR132678	1	SUPPORT WLDMT-FOOTBOARD,RH	
20	WR132679	1	SUPPORT WLDMT-FOOTBOARD,LH	
21	AG550213	2	NUT 0.31-18NC HEX ZN REG	
22	AG561892	1	FITTING LUBE STR 0.25UNF	
23	AG562272	8	WASHER M12 LK ZN REG	
24	AG562375	8	BOLT M12-1.75X 25MM G8.8 ZN HH	
25	WR731972	1	GROMMET	
26	6533975	2	GROMMET	
27	6577754	2	DECAL-WARNING	
28	6588293	2	BUSHING	
29	6626498	8	SPACER	
30	6627860	1	STEP,W/A	
31	6649040	1	BUMPER-RUBBER	
32	6669323	2	SPRING-GAS	
33	6800749	1	BUSHING-W/A	
34	6801521	1	MOUNT	
35	6801571	1	PAD-RUBBER	
36	6801823	1	COVER-TANK	
37	6801824	1	COVER-TANK	
38	6801825	1	PLATE-SIDE LH	
39	6801826	1	PLATE-SIDE RH	
40	6801829	1	SUPPORT-TOP	
41	6801849	1	BRACKET-W/A,LH	
42	6801850	1	BRACKET-W/A,RH	
43	401348X1	2	PLUG-TUBE END,POLY,2.5 SQ	
44	401349X1	1	PLUG-TUBE END,POLY,1X2.5	
45	519024D1	1	FOOTBOARD-LH	

Copyright © 2007 AGCO Corporation

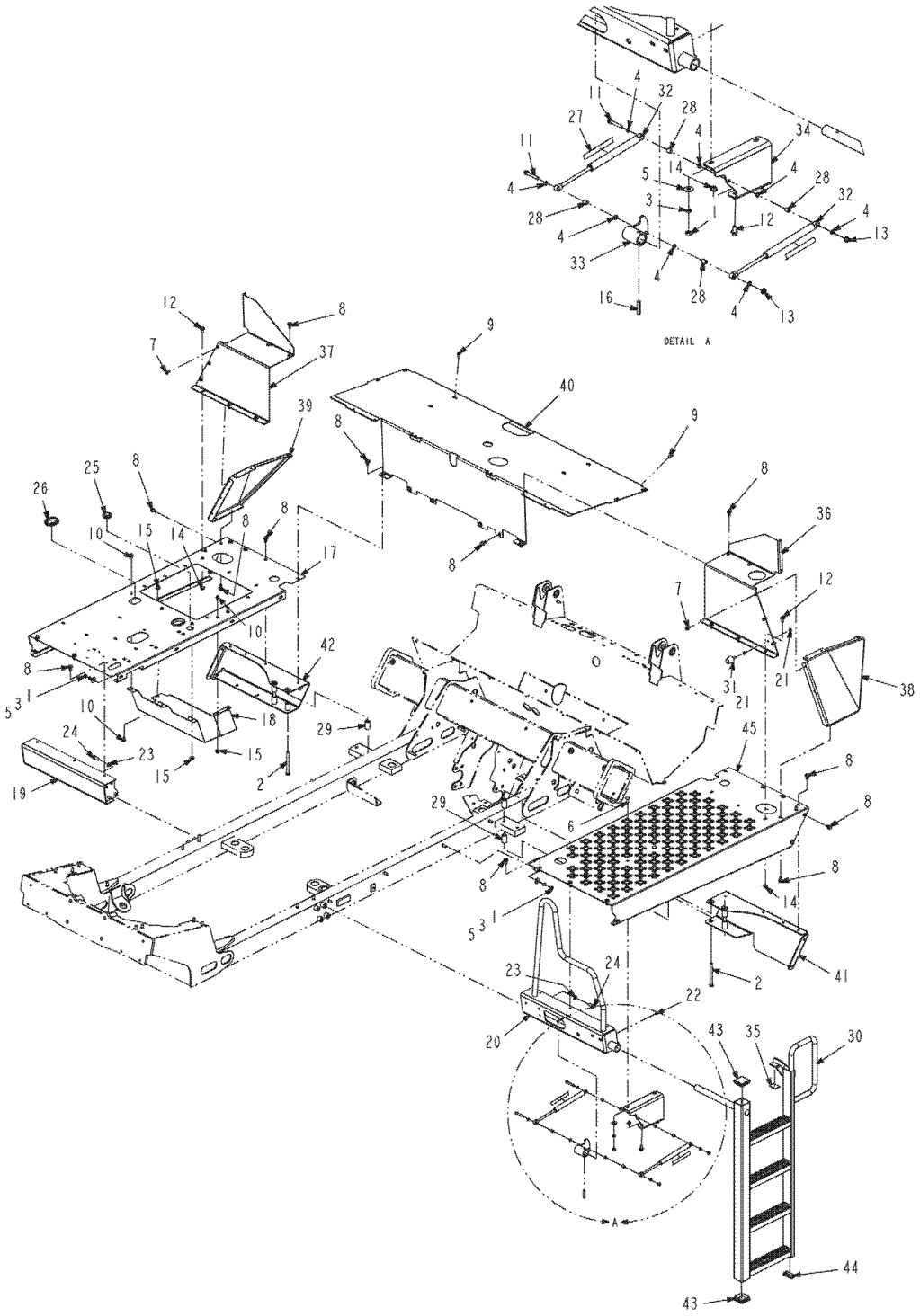

519526D1-01-R510-.tif

Copyright © 2007 AGCO Corporation

FTBOARD GRP-W/O BM REST,4650AT

ITEM	PART #	QTY	DESCRIPTION	COMMENTS
1	WR50838	10	NUT-HEX,METRIC M10-1.5	
2	WR55063	4	SCREW-CAP HEX M12 X 130	
3	WR55106	10	WASHER-LOCK SPRING,10 MM	
4	WR55141	4	WASHER-STL,8MM ID	
5	WR55158	10	WASHER-FLAT,10MM ID,	
6	WR55173	2	BOLT-CARRIAGE,M10 X 25,	
7	WR55190	6	SCREW-CAP HEX M8 X 20,	
8	WR55191	32	HEX HEAD,THREAD ROLLING SCREW	
9	WR55192	10	SCREW-CAP SOCK M10 X 20,	
10	WR55205	6	SCREW-HEX FLG,M8X1.25X16 CL8.8	
11	WR55210	2	SCREW-HEX FLG,M8X1.25X50 CL8.8	
12	WR55214	8	SCREW-HEX FLG,M10X1.5X20 CL8.8	
13	WR55280	2	NUT-FLANGE,M8 X 1.25	
14	WR55281	8	NUT-FLANGE,M10 X 1.5	
15	WR55301	6	NUT-FLANGE,M10 X 1.5,PREV	
16	WR55402	1	PIN-STR COILED,3/8 X	
17	WR129521	1	FOOTBOARD-RH	
18	WR129728	1	SHIELD-OIL COOLER	
19	WR132678	1	SUPPORT WLDMT-FOOTBOARD,RH	
20	WR132679	1	SUPPORT WLDMT-FOOTBOARD,LH	
21	AG550213	2	NUT 0.31-18NC HEX ZN REG	
22	AG561892	1	FITTING LUBE STR 0.25UNF	
23	AG562272	8	WASHER M12 LK ZN REG	
24	AG562375	8	BOLT M12-1.75X 25MM G8.8 ZN HH	
25	WR731972	1	GROMMET	
26	6533975	2	GROMMET	
27	6577754	2	DECAL-WARNING	
28	6588293	2	BUSHING	
29	6626498	8	SPACER	
30	6627860	1	STEP,W/A	
31	6649040	1	BUMPER-RUBBER	
32	6669323	2	SPRING-GAS	
33	6800749	1	BUSHING-W/A	
34	6801521	1	MOUNT	
35	6801571	1	PAD-RUBBER	
36	6801823	1	COVER-TANK	
37	6801824	1	COVER-TANK	
38	6801825	1	PLATE-SIDE LH	
39	6801826	1	PLATE-SIDE RH	
40	6801829	1	SUPPORT-TOP	
41	6801849	1	BRACKET-W/A,LH	
42	6801850	1	BRACKET-W/A,RH	
43	401348X1	2	PLUG-TUBE END,POLY,2.5 SQ	
44	401349X1	1	PLUG-TUBE END,POLY,1X2.5	
45	519024D1	1	FOOTBOARD-LH	

Copyright © 2007 AGCO Corporation

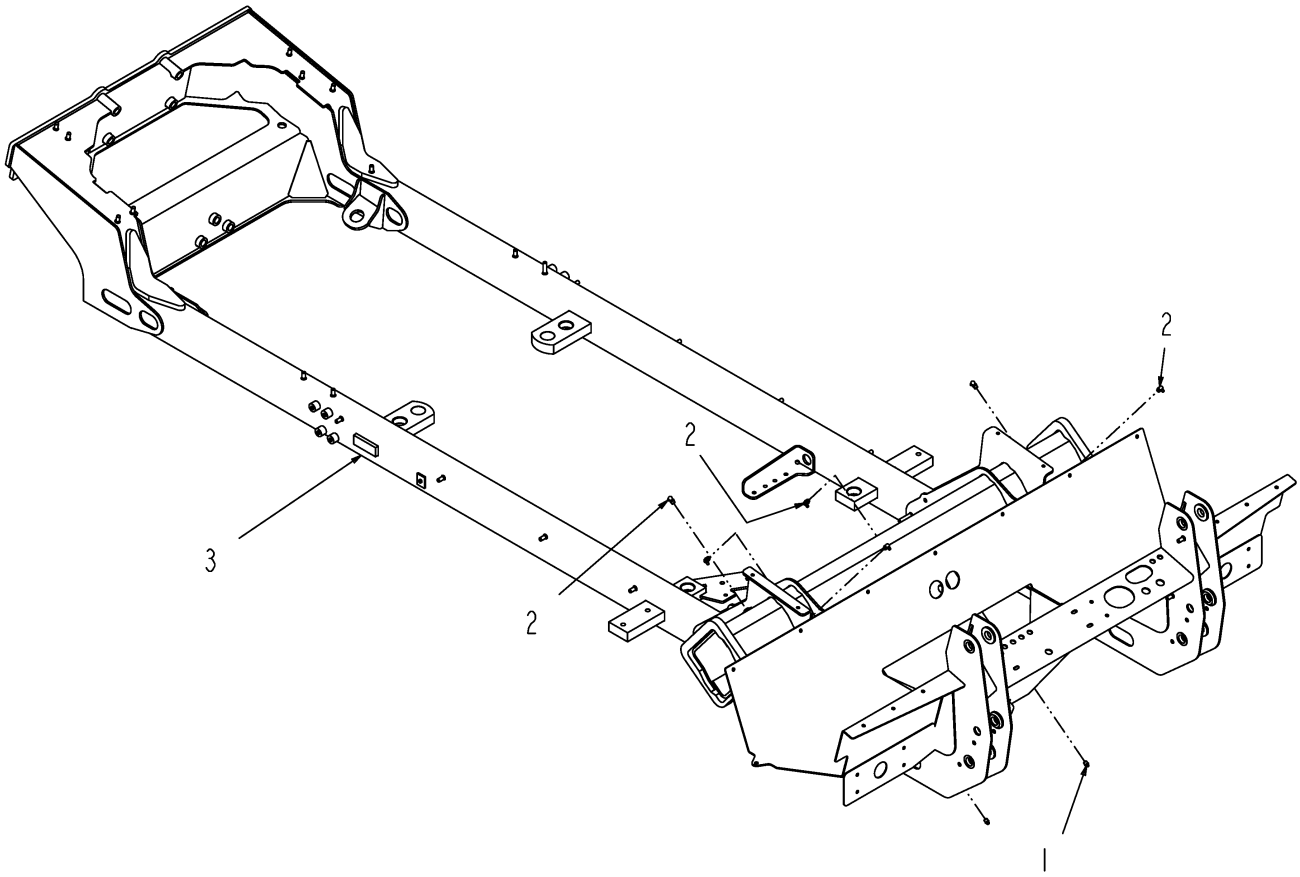

507977D1-02-N413-.TIF

Copyright © 2007 AGCO Corporation

FRAME INSTL-4000A7

ITEM	PART #	QTY	DESCRIPTION	COMMENTS
1	AG550280	2	FITTING LUB.12-27NPTFX0.68	
2	AG559083	6	FITTING LUB 90D 0.125 NPTF	
3	507983D1	1	FRAME - 72 IN AT	

Copyright © 2007 AGCO Corporation

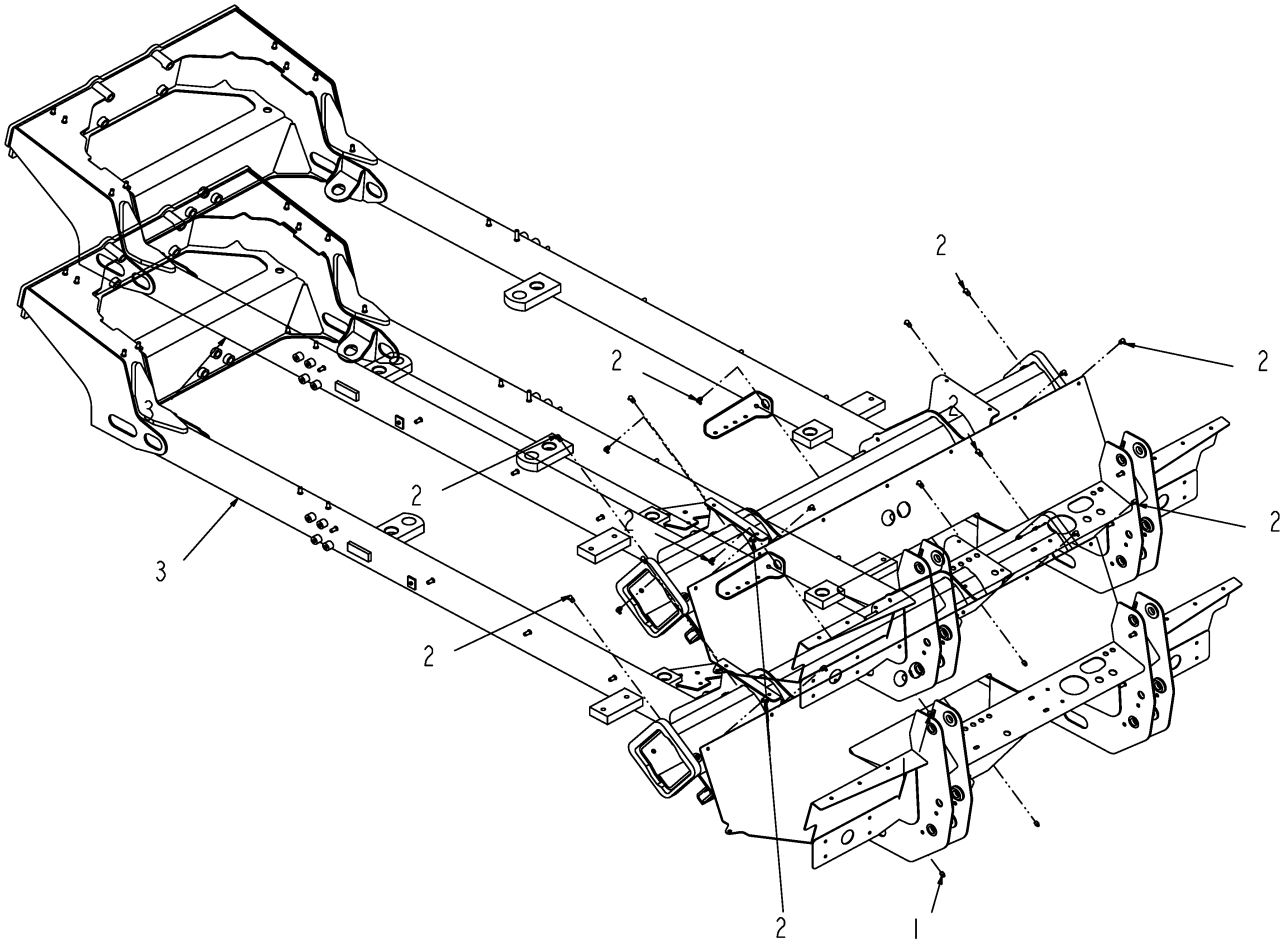

507978D1-02-N413-.TIF

Copyright © 2007 AGCO Corporation

FRAME INSTL-4000A8

ITEM	PART #	QTY	DESCRIPTION	COMMENTS
1	AG550280	2	FITTING LUB.12-27NPTFX0.68	
2	AG559083	10	FITTING LUB 90D 0.125 NPTF	
3	507984D1	1	FRAME - 80 IN AT	

Copyright © 2007 AGCO Corporation

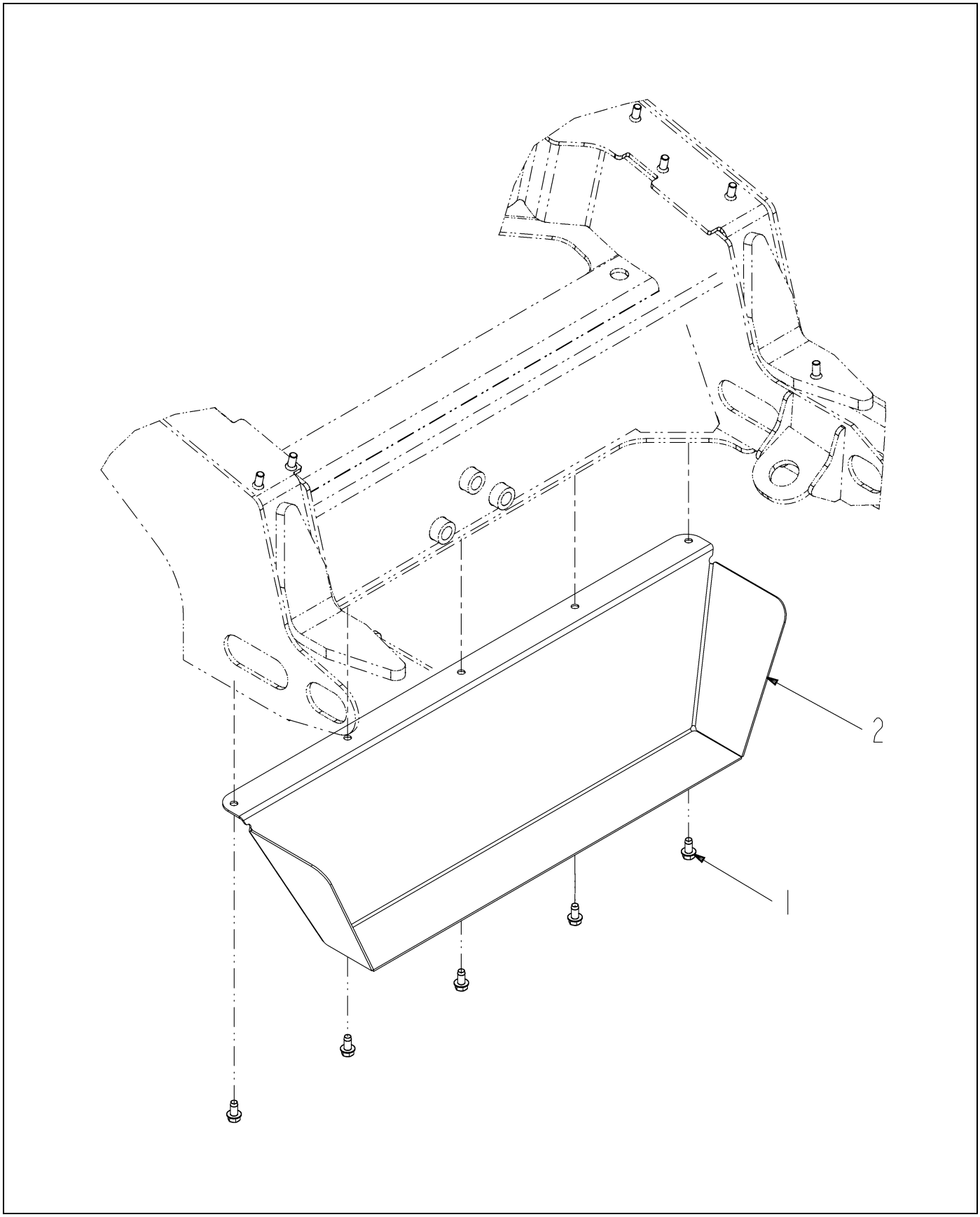

518301D1-01-R115-.TIF

Copyright © 2007 AGCO Corporation

SHIELD INSTL-BELT

ITEM	PART #	QTY	DESCRIPTION	COMMENTS
1	WR55349	5	SCREW-HEX,3/8 X 3/4,	
2	6801632	1	SHIELD-BELT	
	FOOTNOTE		EFFECTIVE Txx1001	

Copyright © 2007 AGCO Corporation

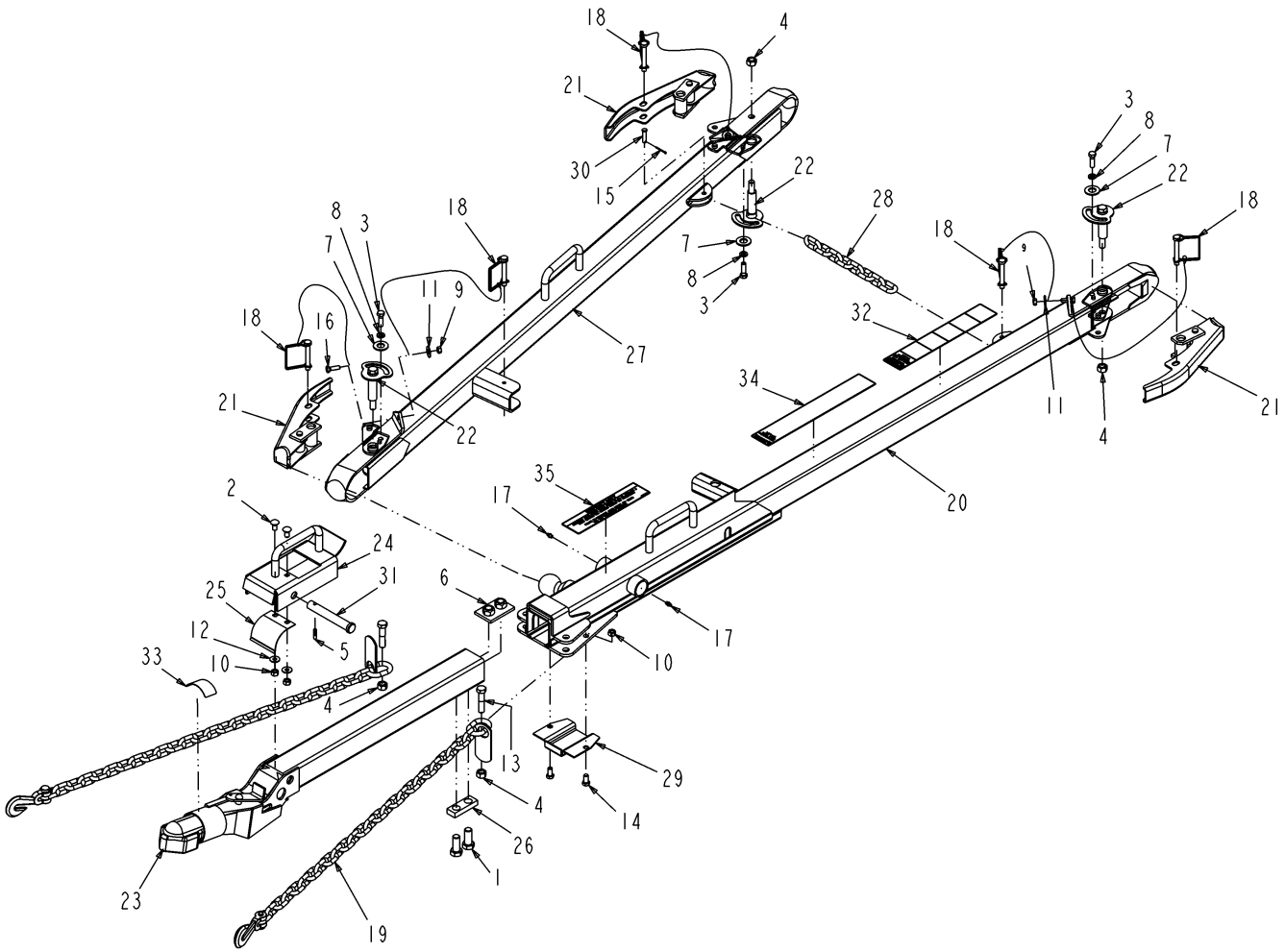

6669692.TIF

Copyright © 2007 AGCO Corporation

ITEM	PART #	QTY	DESCRIPTION	COMMENTS
1	WR10193	2	SCREW-CAP HEX 5/8 NC X	
2	WR55111	2	BOLT-SQR, HD, 3/8 NC X 3/4 G2	
3	WR55147	3	SCREW-CAP HEX 3/8 NC X	
4	WR55367	5	NUT-TOPLOCK, 1/2-13UNC G5	
5	WR55489	1	PIN-STR COILED,1/4 X	
6	WR132466	1	COUPLER-PLATE,TOW HITCH	
7	AG515180	3	WASHER 0.62 FL ZN SAE TYP-A G8	
8	AG550191	3	WASHER 0.37 LK ZN REG	
9	AG550213	3	NUT 0.31-18NC HEX ZN REG	
10	AG550825	4	NUT 0.37-16NC HEX ZN REG	
11	AG551007	3	WASHER 0.37 FL ZN REG TYPE-B	
12	AG551015	2	WASHER 0.31 FL ZN REG TYPE-B	
13	AG551224	2	BOLT-.50-20X2.25,G5,ZN,HHD	
14	AG551457	2	BOLT 0.37-16NCX 0.75 G5 PL HHD	
15	AG552321	1	PIN COTTER 0.09X1.00 ZN (D)	
16	AG559202	3	BOLT 0.31-18NCX 1.00 G8 ZN HHD	
17	AG561892	2	FITTING LUBE STR 0.25UNF	
18	6661838	5	PIN ASSY-HITCH	
19	6665477	2	CHAIN ASSY-SAFETY	
20	6669695	1	HITCH-W/A,LH	
21	6669696	3	HANDLE-W/A	
22	6669697	3	TUBE-CAM,W/A	
23	6669698	1	COUPLER-W/A	
24	6669699	1	LATCH-W/A	
25	6669700	1	SPRING	
26	6669702	1	PLATE-STOP	
27	6669703	1	HITCH-W/A,RH	
28	6669707	1	CHAIN	
29	6670718	1	COVER-BOTTOM	
30	6670719	1	PIN	
31	6670720	1	PIN	
32	6801473	1	DECAL-HITCH	
33	6803316	1	DECAL-COUPLER	
34	6803317	1	DECAL-WARNING	
35	WR55935	1	DECAL-TOWING	

Copyright © 2007 AGCO Corporation

HUB ASSY-WHEEL	5-1
TIE ROD ASM-3440-80	5-2
TIE ROD ASM-3440-80	5-3
STEERING ASSY-ARM	5-4
STEER INSTL-NO TOW,4650 80 IN	5-5
TIE ROD ASM-340-80	5-6
STEER INSTL-NO TOW,4450 72 IN	5-7
TIE ROD ASM-3440-72	5-8
STEER INSTL-NO TOW,4450 80 IN	5-9
BRAKE ASSY- 6 DISC LH	5-10
BRAKE ASSY- 6 DISC RH	5-11
STEERING GRP-WF,80 IN	5-12
STEERING GRP-WF,72 IN	5-13
WIDE FRONT GROUP-SC	5-14
WIDE FRONT GROUP	5-15
WIDE FRONT GROUP	5-16
WIDE FRONT GRP	5-17
EXTENSION INSTL-FRONT	5-18

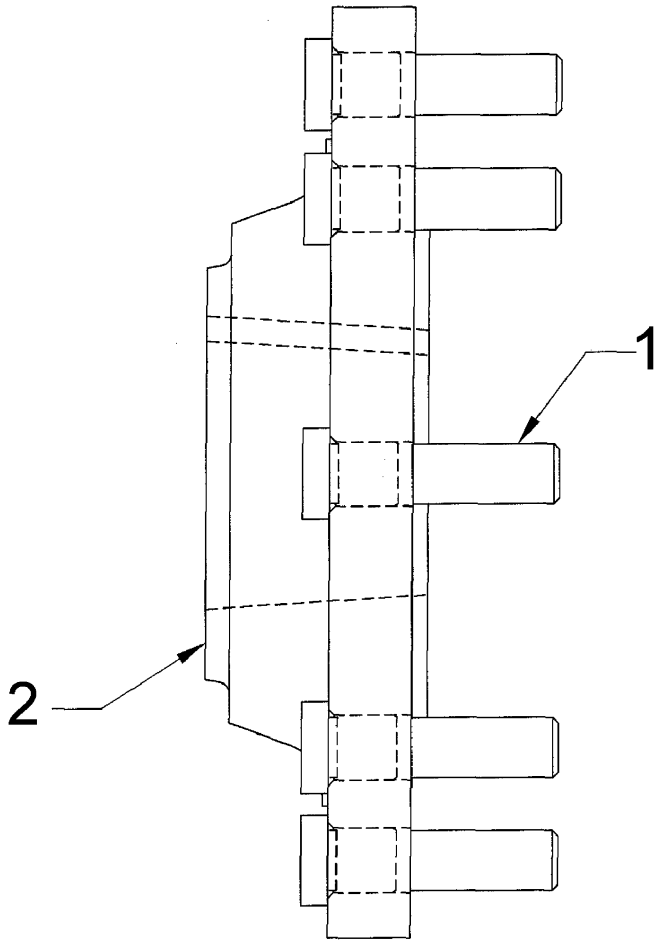

6803541.TIF

Copyright © 2007 AGCO Corporation

HUB ASSY-WHEEL

ITEM	PART #	QTY	DESCRIPTION	COMMENTS
1	WR55627	8	BOLT-WHEEL 5/8X18 UNF X 2	
2	6803540	1	HUB-WHEEL	

Copyright © 2007 AGCO Corporation

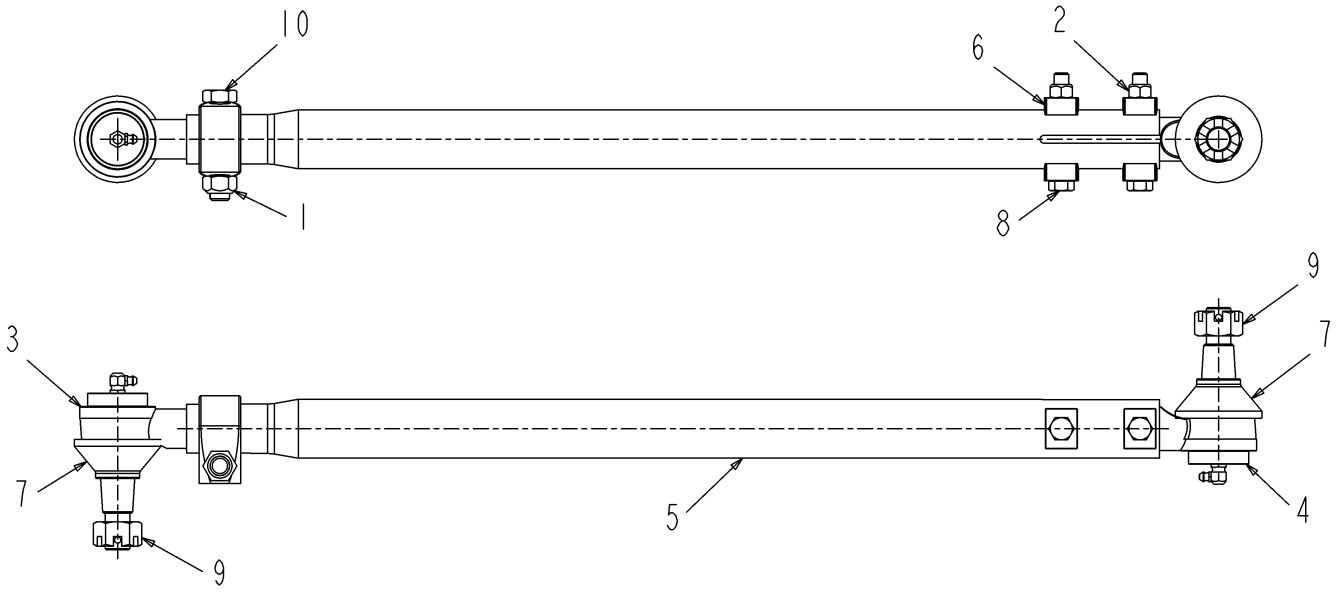

WR39080.TIF

Copyright © 2007 AGCO Corporation

TIE ROD ASM-3440-80

ITEM	PART #	QTY	DESCRIPTION	COMMENTS
1	WR55354	1	NUT-TOPLOCK, 1/2-13UNC G8	
2	WR55362	2	NUT-TOPLOCK, 3/8-24UNF G8	
3	WR124890	1	ROD END-THREADED	
4	WR124891	1	ROD SLIDING	
5	WR124892	1	TUBE & CLAMP 24.75 IN	
6	WR124898	4	CLAMP-TIE ROD	
7	WR129279	2	BOOT-GREASE	
8	WR129280	2	BOLT 0.37-24NFX 2.75 G8 ZN HHD	
9	WR129281	2	NUT-SLOTTED,5/8-18UNF	
10	AG553166	1	BOLT 0.50-13NCX 2.50 G5 ZN HHD	

Copyright © 2007 AGCO Corporation

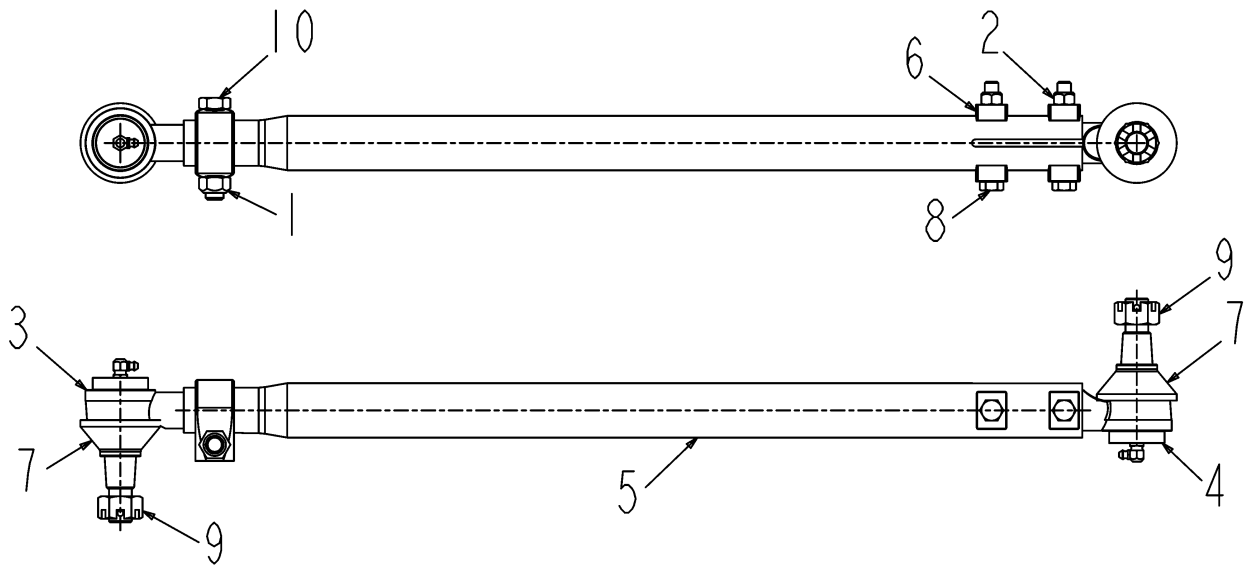

WR39080-B-1.TIF

Copyright © 2007 AGCO Corporation

TIE ROD ASM-3440-80

ITEM	PART #	QTY	DESCRIPTION	COMMENTS
1	WR55354	1	NUT-TOPLOCK, 1/2-13UNC G8	
2	WR55362	2	NUT-TOPLOCK, 3/8-24UNF G8	
3	WR124890	1	ROD END-THREADED	
4	WR124891	1	ROD SLIDING	
5	WR124892	1	TUBE & CLAMP 24.75 IN	
6	WR124898	4	CLAMP-TIE ROD	
7	WR129279	2	BOOT-GREASE	
8	WR129280	2	BOLT 0.37-24NFX 2.75 G8 ZN HHD	
9	WR129281	2	NUT-SLOTTED,5/8-18UNF	
10	AG553166	1	BOLT 0.50-13NCX 2.50 G5 ZN HHD	

Copyright © 2007 AGCO Corporation

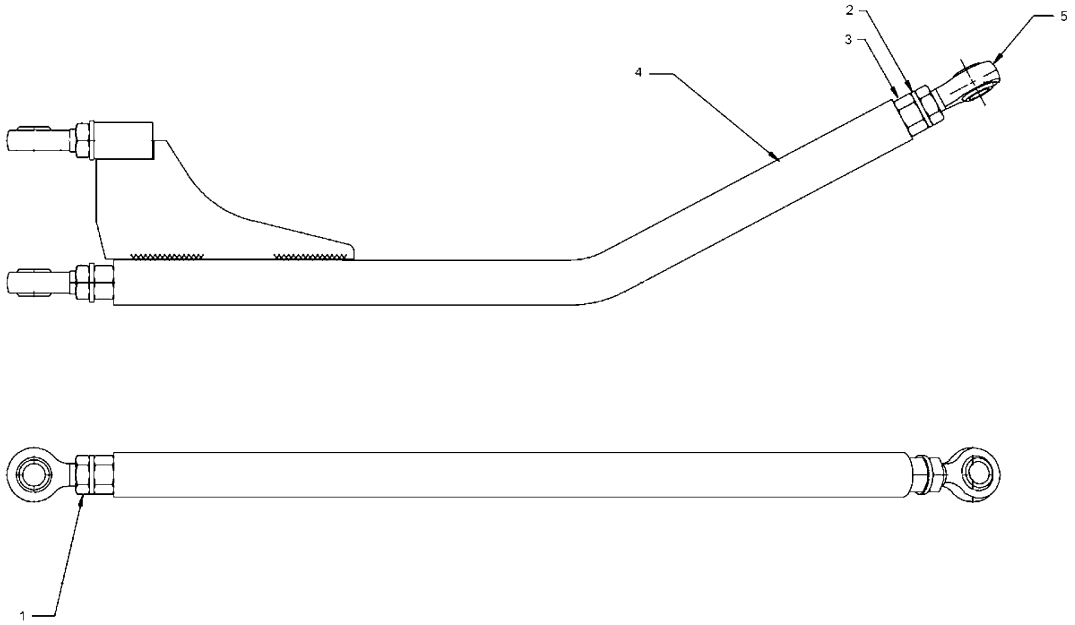

6597223.TIF

Copyright © 2007 AGCO Corporation

STEERING ASSY-ARM

ITEM	PART #	QTY	DESCRIPTION	COMMENTS
1	WR11536	3	NUT-JAM, 5/8-18UNF G5 MIN	
2	AG550450	3	WASHER 0.62 LK ZN REG	
3	AG551937	2	NUT 0.62-18NF HEX ZN REG	
4	6627345	1	ARM-STEERING,W/A	
5	6669712	3	JOINT-BALL	

Copyright © 2007 AGCO Corporation

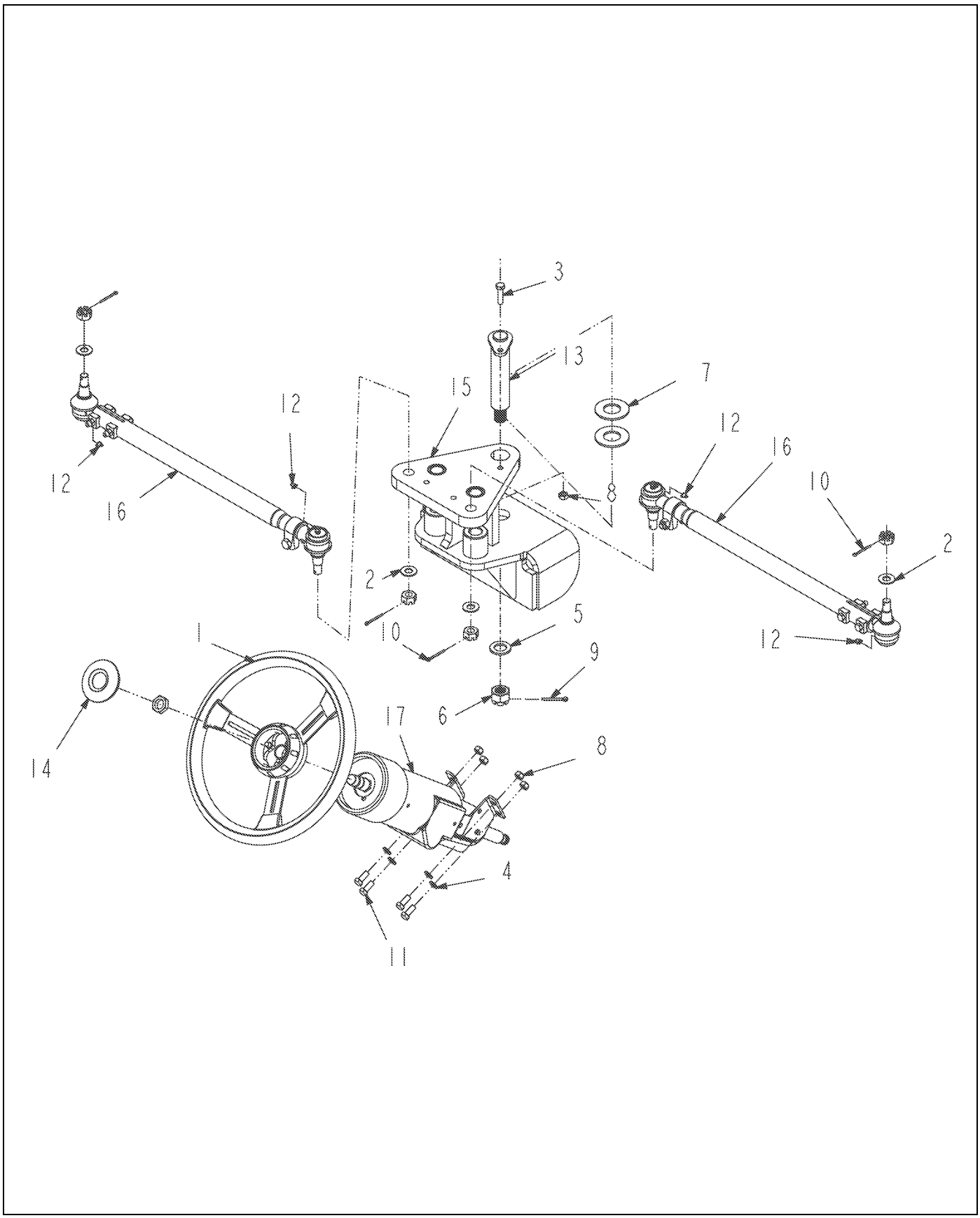

508935D1-02-N987-.TIF

Copyright © 2007 AGCO Corporation

STEER INSTL-NO TOW,4650 80 IN

ITEM	PART #	QTY	DESCRIPTION	COMMENTS
1	WR28944	1	STEERING WHEEL-#1634D3P	
2	WR50857	4	WASHER-FLAT,HRD 5/8	
3	WR55047	1	SCREW-CAP HEX M10 X 40	
4	WR55075	4	WASHER-FL,M10,ZN,REG	
5	WR55079	1	WASHER-PLAIN,24MM ID,LC,	
6	WR55168	1	NUT-CASTLE,24MM X 3.00	
7	WR55198	2	WASHER-PLAIN HRD,1 3/8 ID	
8	WR55272	5	NUT-LOCK,M10 X 1.5,PREV	
9	WR55400	1	PIN-COTTER,5MM X 40MM	
10	AG553972	4	PIN COTTER 0.15X1.50 ZN	
11	AG561683	4	BOLT M10-1.5 X 25MM G8.8 ZN HH	
12	AG562629	4	CAP GREASE PLASTIC	
13	6597793	1	SHAFT W/A	
14	6660827	1	BUTTON-HORN	
15	508922D1	1	PLATE W/A,NO TOW STEERING	
16	WR39078	2	TIE ROD ASM-340-80	SEE PAGE 5-6
17	WR55654	1	STEERING COLUMN#9204218	SEE PAGE 8-4

Copyright © 2007 AGCO Corporation

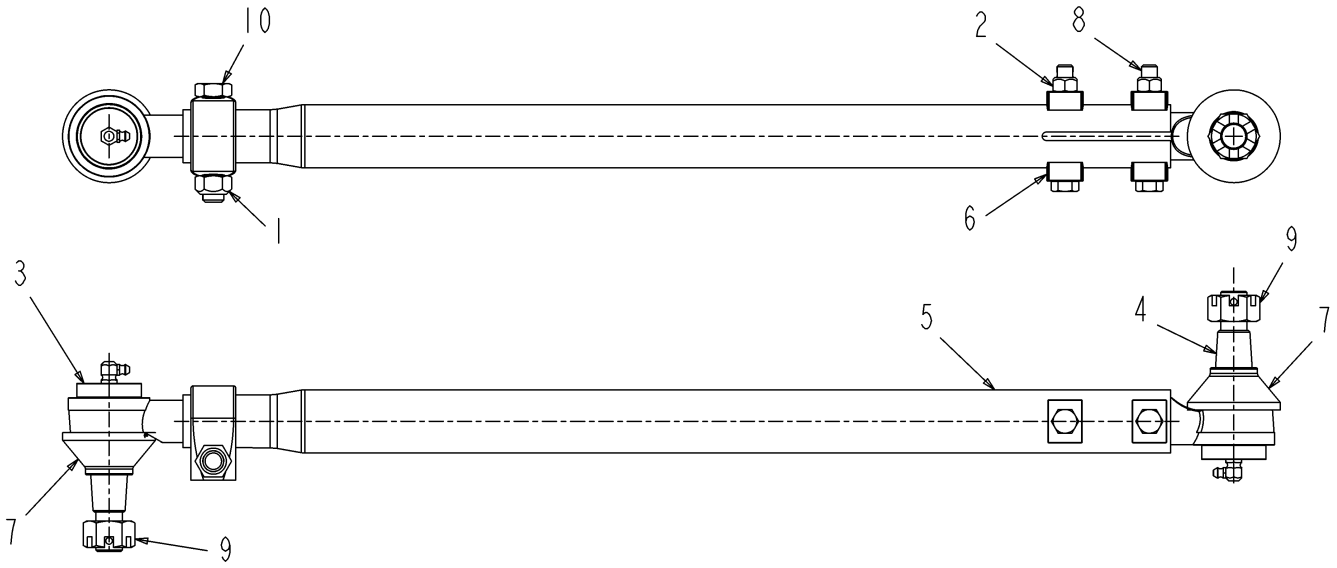

WR39078.TIF

Copyright © 2007 AGCO Corporation

TIE ROD ASM-340-80

ITEM	PART #	QTY	DESCRIPTION	COMMENTS
1	WR55354	1	NUT-TOPLOCK, 1/2-13UNC G8	
2	WR55362	2	NUT-TOPLOCK, 3/8-24UNF G8	
3	WR124890	1	ROD END-THREADED	
4	WR124891	1	ROD SLIDING	
5	WR124894	1	TUBE & CLAMP 23.40 IN	
6	WR124898	4	CLAMP-TIE ROD	
7	WR129279	2	BOOT-GREASE	
8	WR129280	2	BOLT 0.37-24NFX 2.75 G8 ZN HHD	
9	WR129281	2	NUT-SLOTTED,5/8-18UNF	
10	AG553166	1	BOLT 0.50-13NCX 2.50 G5 ZN HHD	

Copyright © 2007 AGCO Corporation

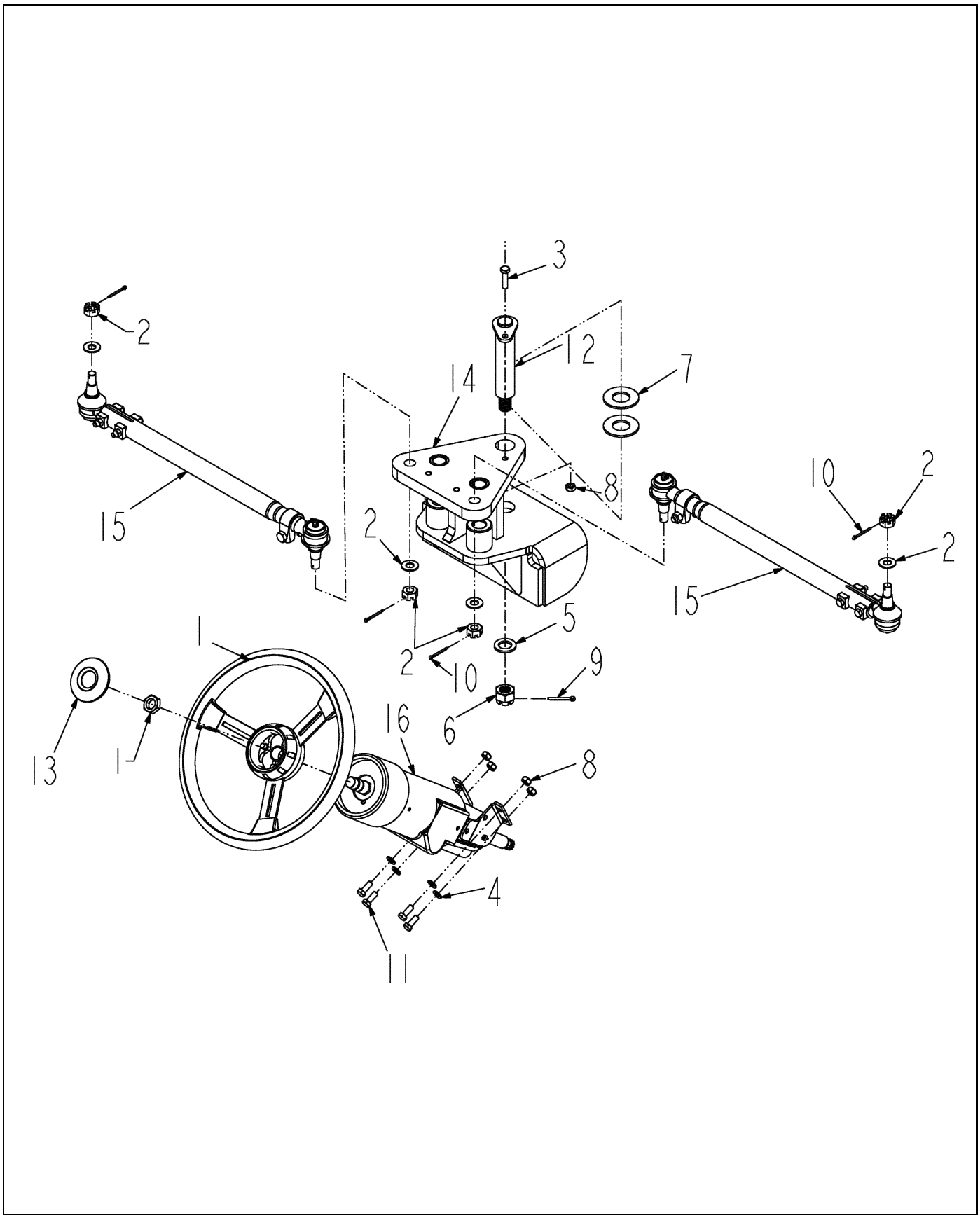

508936D1-01-N186-.TIF

Copyright © 2007 AGCO Corporation

STEER INSTL-NO TOW,4450 72 IN

ITEM	PART #	QTY	DESCRIPTION	COMMENTS
1	WR28944	1	STEERING WHEEL-#1634D3P	
2	WR50857	4	WASHER-FLAT,HRD 5/8	
3	WR55047	1	SCREW-CAP HEX M10 X 40	
4	WR55075	4	WASHER-FL,M10,ZN,REG	
5	WR55079	1	WASHER-PLAIN,24MM ID,LC,	
6	WR55168	1	NUT-CASTLE,24MM X 3.00	
7	WR55198	2	WASHER-PLAIN HRD,1 3/8 ID	
8	WR55272	5	NUT-LOCK,M10 X 1.5,PREV	
9	WR55400	1	PIN-COTTER,5MM X 40MM	
10	AG553972	4	PIN COTTER 0.15X1.50 ZN	
11	AG561683	4	BOLT M10-1.5 X 25MM G8.8 ZN HH	
12	6597793	1	SHAFT W/A	
13	6660827	1	BUTTON-HORN	
14	508922D1	1	PLATE W/A,NO TOW STEERING	
15	WR39079	2	TIE ROD ASM-3440-72	SEE PAGE 5-8
16	WR55654	1	STEERING COLUMN#9204218	SEE PAGE 8-4

Copyright © 2007 AGCO Corporation

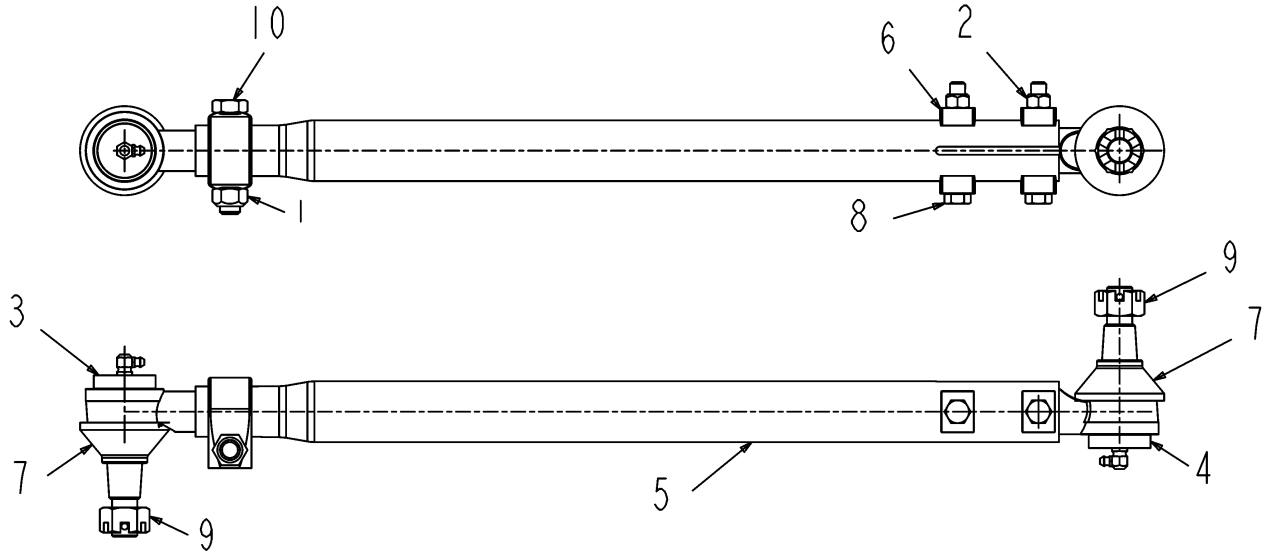

WR39079-B-1.TIF

Copyright © 2007 AGCO Corporation

TIE ROD ASM-3440-72

ITEM	PART #	QTY	DESCRIPTION	COMMENTS
1	WR55354	1	NUT-TOPLOCK, 1/2-13UNC G8	
2	WR55362	2	NUT-TOPLOCK, 3/8-24UNF G8	
3	WR124890	1	ROD END-THREADED	
4	WR124891	1	ROD SLIDING	
5	WR124893	1	TUBE & CLAMP 21.31 IN	
6	WR124898	4	CLAMP-TIE ROD	
7	WR129279	2	BOOT-GREASE	
8	WR129280	2	BOLT 0.37-24NFX 2.75 G8 ZN HHD	
9	WR129281	2	NUT-SLOTTED,5/8-18UNF	
10	AG553166	1	BOLT 0.50-13NCX 2.50 G5 ZN HHD	

Copyright © 2007 AGCO Corporation

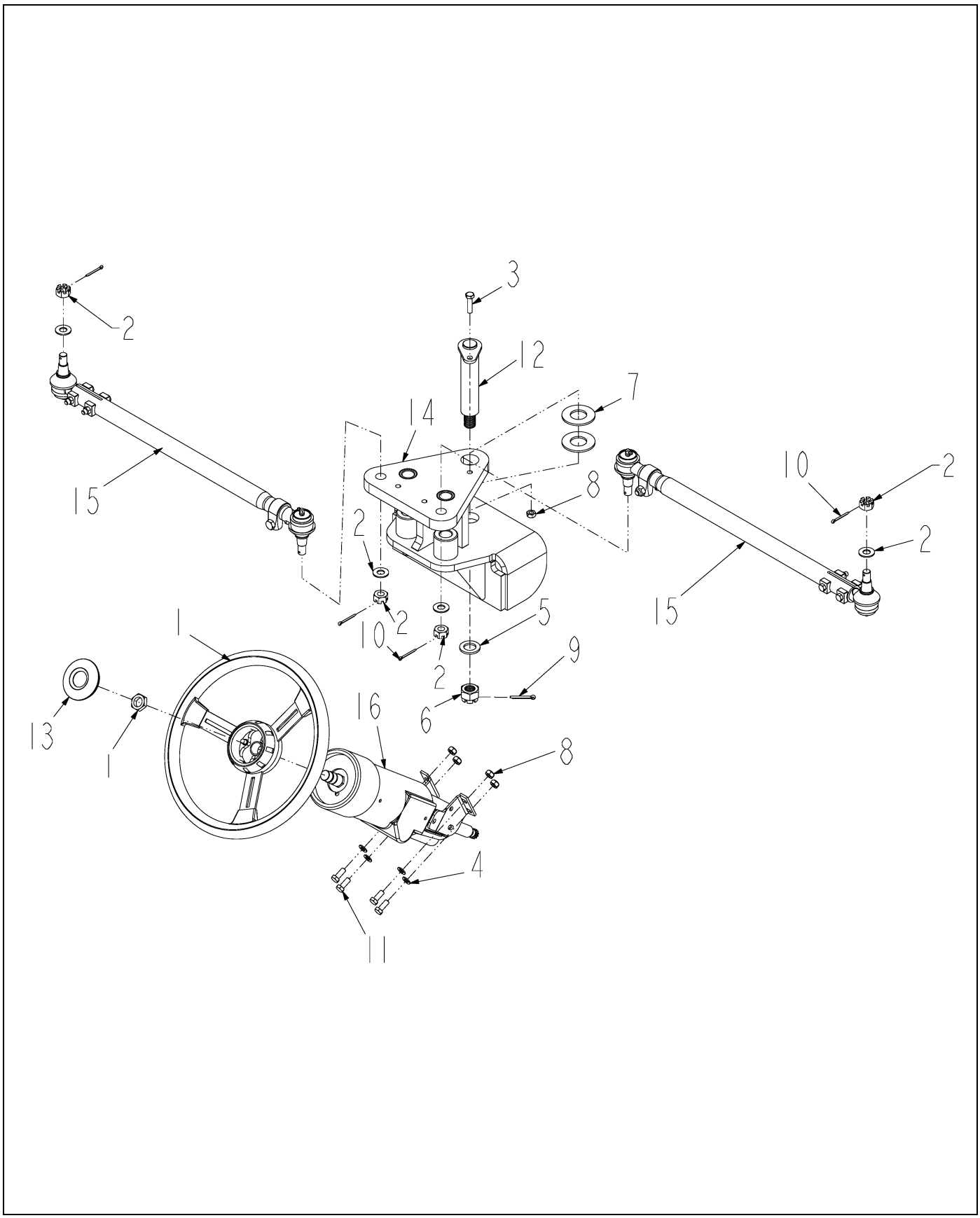

508937D1-01-N186-.TIF

Copyright © 2007 AGCO Corporation

STEER INSTL-NO TOW,4450 80 IN

ITEM	PART #	QTY	DESCRIPTION	COMMENTS
1	WR28944	1	STEERING WHEEL-#1634D3P	
2	WR50857	4	WASHER-FLAT,HRD 5/8	
3	WR55047	1	SCREW-CAP HEX M10 X 40	
4	WR55075	4	WASHER-FL,M10,ZN,REG	
5	WR55079	1	WASHER-PLAIN,24MM ID,LC,	
6	WR55168	1	NUT-CASTLE,24MM X 3.00	
7	WR55198	2	WASHER-PLAIN HRD,1 3/8 ID	
8	WR55272	5	NUT-LOCK,M10 X 1.5,PREV	
9	WR55400	1	PIN-COTTER,5MM X 40MM	
10	AG553972	4	PIN COTTER 0.15X1.50 ZN	
11	AG561683	4	BOLT M10-1.5 X 25MM G8.8 ZN HH	
12	6597793	1	SHAFT W/A	
13	6660827	1	BUTTON-HORN	
14	508922D1	1	PLATE W/A,NO TOW STEERING	
15	WR39080	2	TIE ROD ASM-3440-80	SEE PAGE 5-2
16	WR55654	1	STEERING COLUMN#9204218	SEE PAGE 8-4

Copyright © 2007 AGCO Corporation

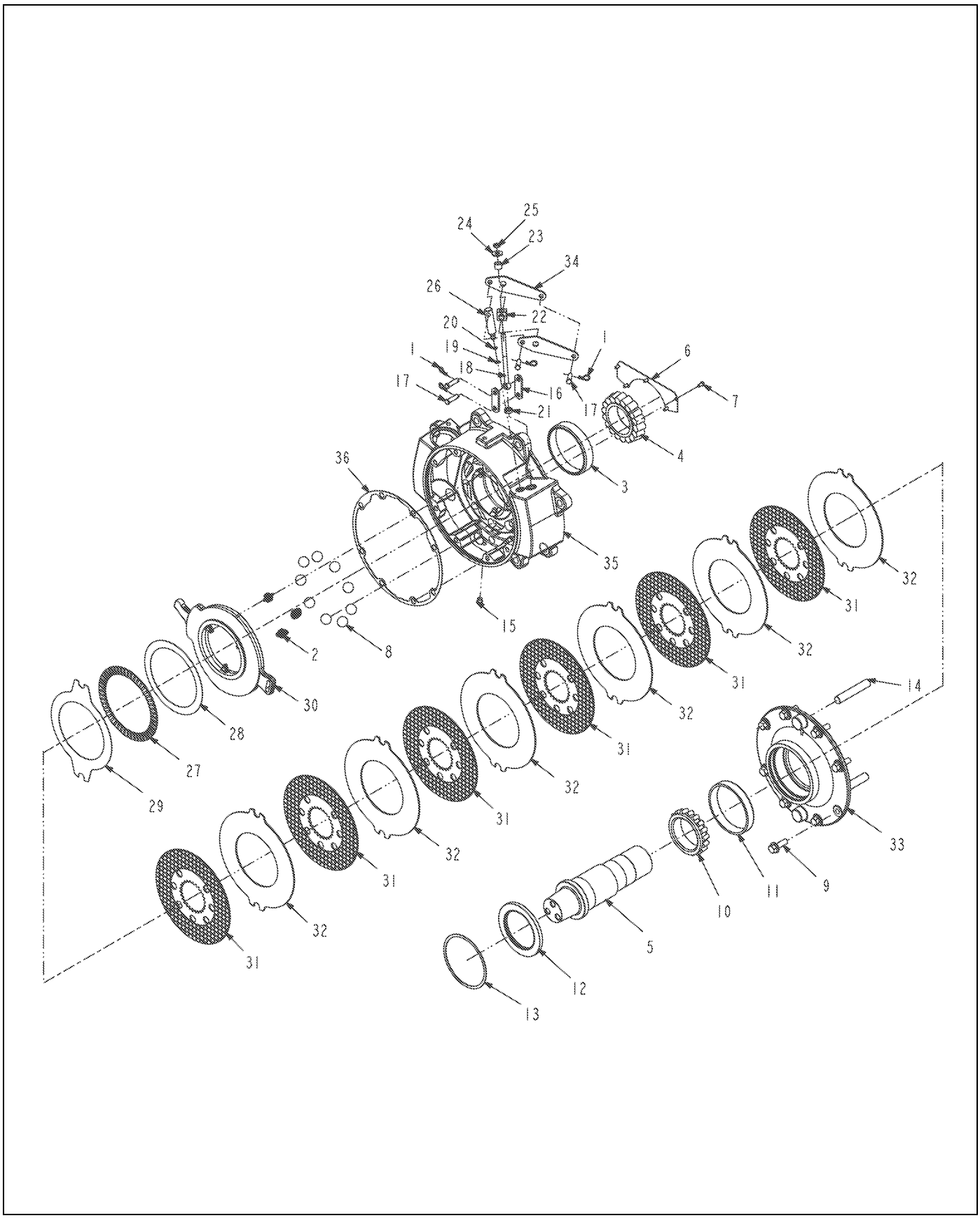

511017D1-03-R060-.TIF

Copyright © 2007 AGCO Corporation

BRAKE ASSY- 6 DISC LH

ITEM	PART #	QTY	DESCRIPTION	COMMENTS
1	6665632	4	CLIP PIN	
2	6672643	3	SPRING	
3	6672644	1	CUP	
4	6672645	1	BEARING	
5	6672646	1	SHAFT	
6	6672647	1	PLATE	
7	6672648	5	SCREW-BUTTON HEAD SOCKET	
8	6672649	9	BALL	
9	6672654	8	HEX FLANGE BOLT	
10	6672655	1	CONE BEARING	
11	6672656	1	TAPER CUP	
12	6672657	1	SEAL	
13	6672658	1	RETAINING RING	
14	6672659	2	PIN	
15	6672660	1	PLUG	
16	6672661	2	LINK	
17	6672662	4	CLEVIS PIN	
18	6672663	1	BOLT EYE	
19	6672664	1	RETAINING RING	
20	6672665	1	O-RING	
21	6672666	1	SEAL	
22	6672668	1	PIVOT	
23	6672669	1	SPACER	
24	6672670	1	WASHER	
25	6672671	1	LOCKNUT	
26	6672672	1	LEVER POST	
27	511175D1	1	BEARING - NEEDLE ROLLER THRUST	
28	511176D1	1	WASHER - THRUST BEARING	
29	511177D1	1	STATOR- THRUST BEARING	
30	511178D1	1	ACTUATOR - ROTATING, LH	
31	511180D1	6	DISC - ROTATING, .175 IN THK	
32	511181D1	6	DISC - STATOR, .118 IN THK	
33	511182D1	1	COVER - END PLATE, SIX DISC	
34	511625D1	2	LEVER	
35	WR55924	1	HOUSING,LH	
36	WR55927	1	GASKET	

Copyright © 2007 AGCO Corporation

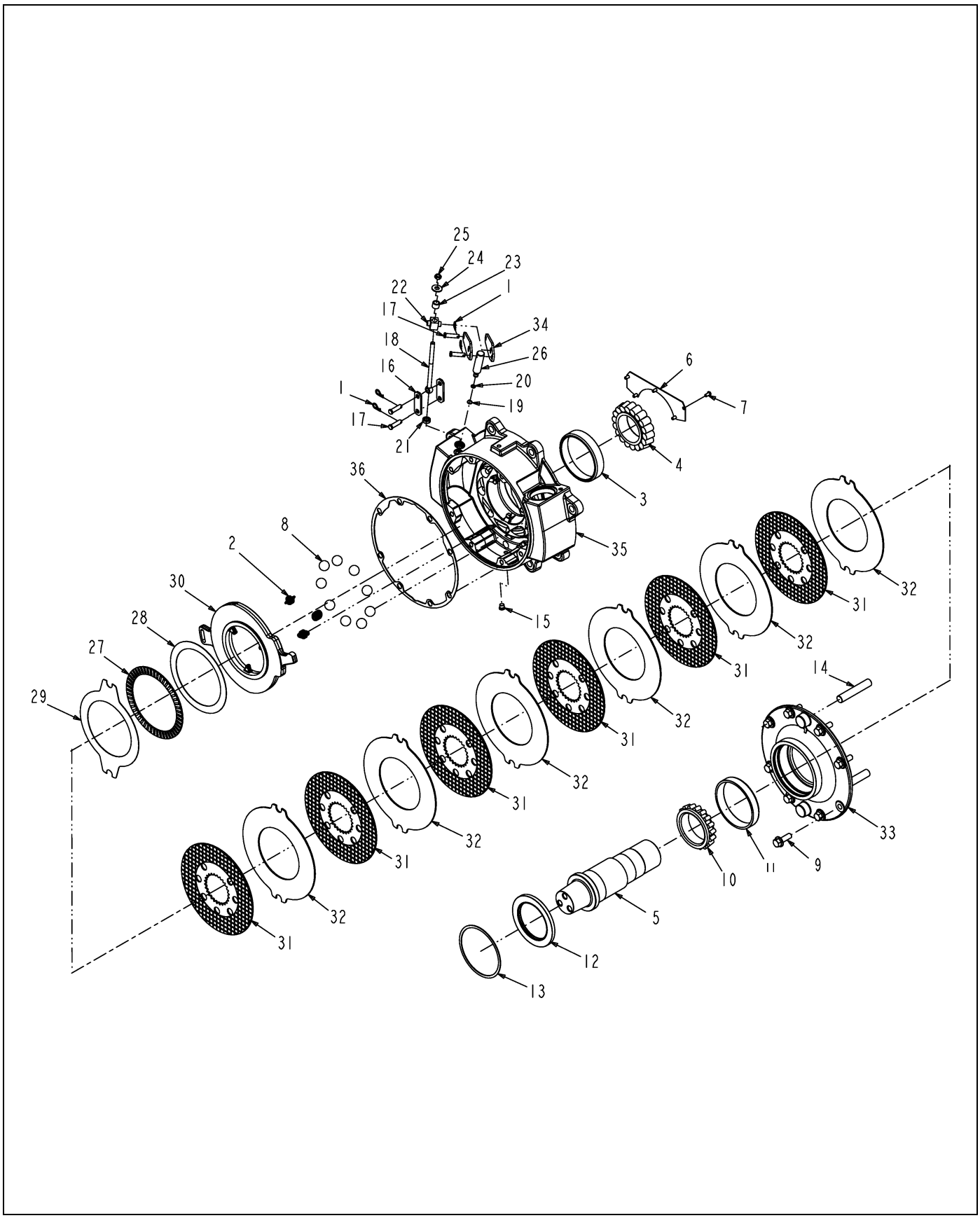

511018D1-03-R060-.TIF

Copyright © 2007 AGCO Corporation

BRAKE ASSY- 6 DISC RH

ITEM	PART #	QTY	DESCRIPTION	COMMENTS
1	6665632	4	CLIP PIN	
2	6672643	3	SPRING	
3	6672644	1	CUP	
4	6672645	1	BEARING	
5	6672646	1	SHAFT	
6	6672647	1	PLATE	
7	6672648	5	SCREW-BUTTON HEAD SOCKET	
8	6672649	9	BALL	
9	6672654	8	HEX FLANGE BOLT	
10	6672655	1	CONE BEARING	
11	6672656	1	TAPER CUP	
12	6672657	1	SEAL	
13	6672658	1	RETAINING RING	
14	6672659	2	PIN	
15	6672660	1	PLUG	
16	6672661	2	LINK	
17	6672662	4	CLEVIS PIN	
18	6672663	1	BOLT EYE	
19	6672664	1	RETAINING RING	
20	6672665	1	O-RING	
21	6672666	1	SEAL	
22	6672668	1	PIVOT	
23	6672669	1	SPACER	
24	6672670	1	WASHER	
25	6672671	1	LOCKNUT	
26	6672672	1	LEVER POST	
27	511175D1	1	BEARING - NEEDLE ROLLER THRUST	
28	511176D1	1	WASHER - THRUST BEARING	
29	511177D1	1	STATOR- THRUST BEARING	
30	511179D1	1	ACTUATOR - ROTATING, RH	
31	511180D1	6	DISC - ROTATING, .175 IN THK	
32	511181D1	6	DISC - STATOR, .118 IN THK	
33	511182D1	1	COVER - END PLATE, SIX DISC	
34	511625D1	2	LEVER	
35	WR55925	1	HOUSING,RH	
36	WR55927	1	GASKET	

Copyright © 2007 AGCO Corporation

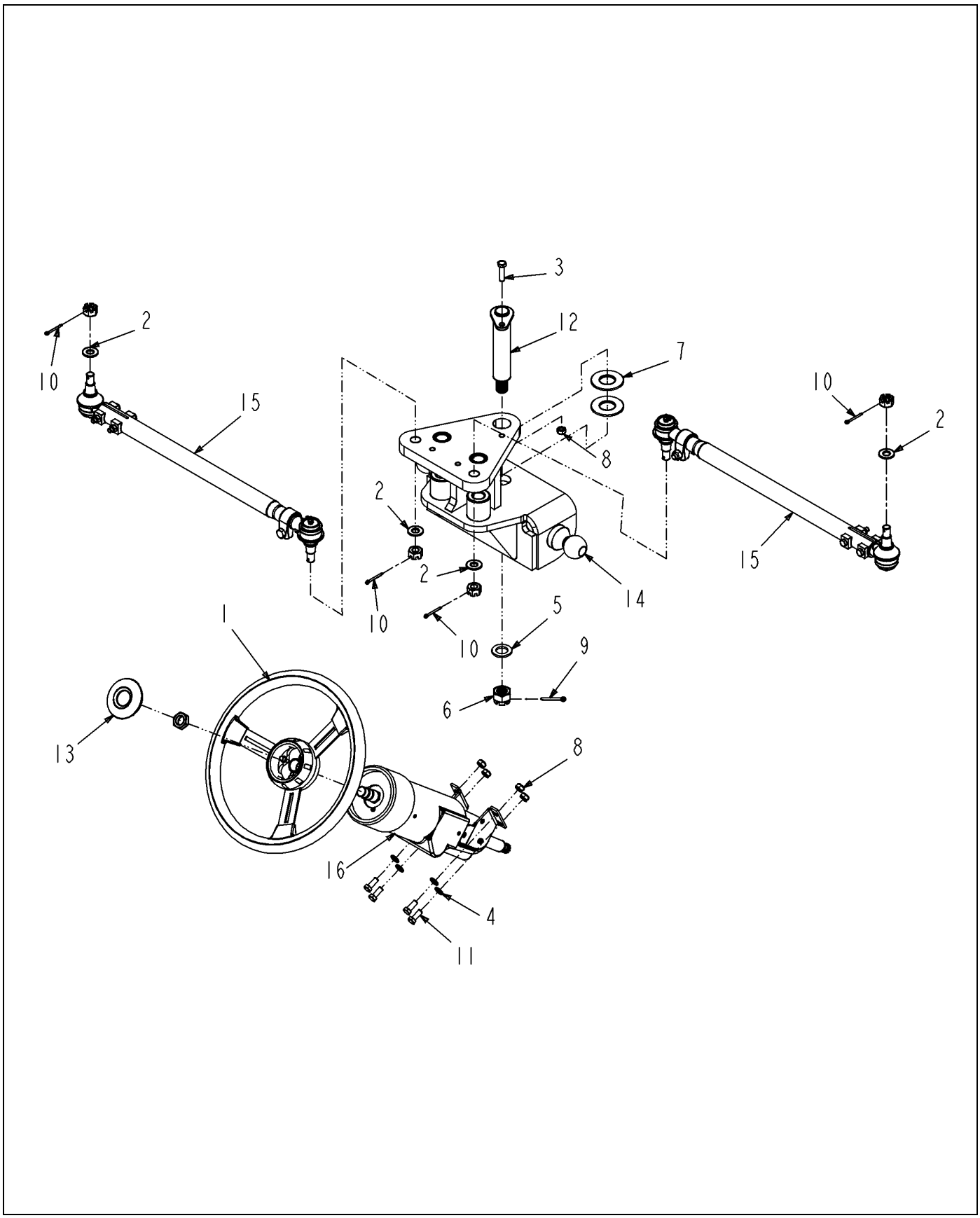

6618445-03-R579-.TIF

Copyright © 2007 AGCO Corporation

STEERING GRP-WF,80 IN

ITEM	PART #	QTY	DESCRIPTION	COMMENTS
1	WR28944	1	STEERING WHEEL-#1634D3P	
2	WR50857	4	WASHER-FLAT,HRD 5/8	
3	WR55047	1	SCREW-CAP HEX M10 X 40	
4	WR55075	4	WASHER-FL,M10,ZN,REG	
5	WR55079	1	WASHER-PLAIN,24MM ID,LC,	
6	WR55168	1	NUT-CASTLE,24MM X 3.00	
7	WR55198	2	WASHER-PLAIN HRD,1 3/8 ID	
8	WR55272	5	NUT-LOCK,M10 X 1.5,PREV	
9	WR55400	1	PIN-COTTER,5MM X 40MM	
10	AG553972	4	PIN COTTER 0.15X1.50 ZN	
11	AG561683	4	BOLT M10-1.5 X 25MM G8.8 ZN HH	
12	6597793	1	SHAFT W/A	
13	6660827	1	BUTTON-HORN	
14	WR39074	1	PLATE-W/A,STEERING	
15	WR39078	2	TIE ROD ASM-340-80	SEE PAGE 5-6
16	WR55654	1	STEERING COLUMN#9204218	SEE PAGE 8-4

Copyright © 2007 AGCO Corporation

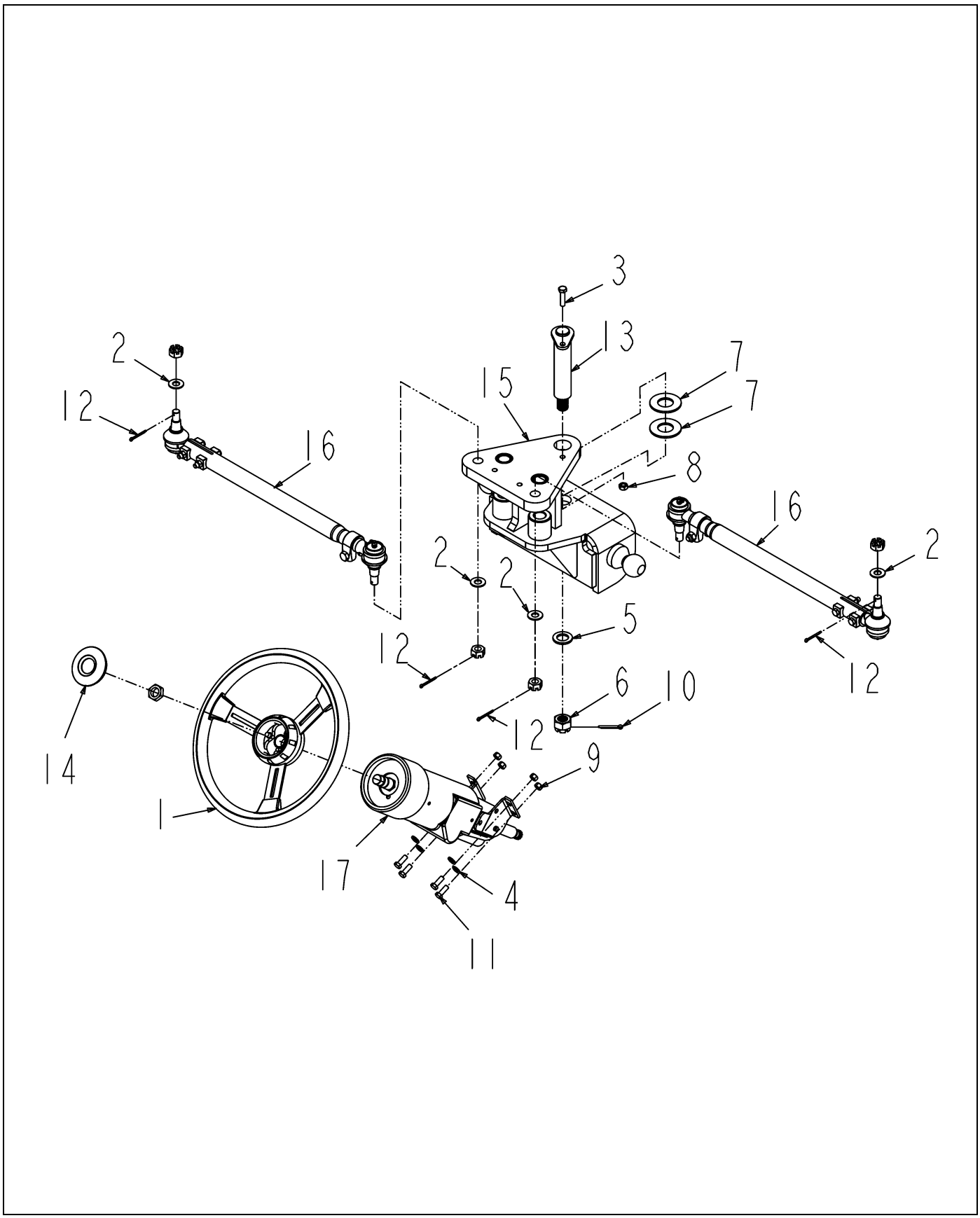

6626719-C.TIF

Copyright © 2007 AGCO Corporation

STEERING GRP-WF,72 IN

ITEM	PART #	QTY	DESCRIPTION	COMMENTS
1	WR28944	1	STEERING WHEEL-#1634D3P	
2	WR50857	4	WASHER-FLAT,HRD 5/8	
3	WR55047	1	SCREW-CAP HEX M10 X 40	
4	WR55075	4	WASHER-FL,M10,ZN,REG	
5	WR55079	1	WASHER-PLAIN,24MM ID,LC,	
6	WR55168	1	NUT-CASTLE,24MM X 3.00	
7	WR55198	2	WASHER-PLAIN HRD,1 3/8 ID	
8	WR55272	1	NUT-LOCK,M10 X 1.5,PREV	
9	WR55366	4	NUT-TOPLOCK, 3/8-16UNC,	
10	WR55400	1	PIN-COTTER,5MM X 40MM	
11	AG550175	4	BOLT 0.37-16NCX 1.00 G5 ZN HHD	
12	AG553972	4	PIN COTTER 0.15X1.50 ZN	
13	6597793	4	SHAFT W/A	
14	6660827	1	BUTTON-HORN	
15	WR39074	1	PLATE-W/A,STEERING	
16	WR39079	2	TIE ROD ASM-3440-72	SEE PAGE 5-8
17	WR55654	1	STEERING COLUMN#9204218	SEE PAGE 8-4

Copyright © 2007 AGCO Corporation

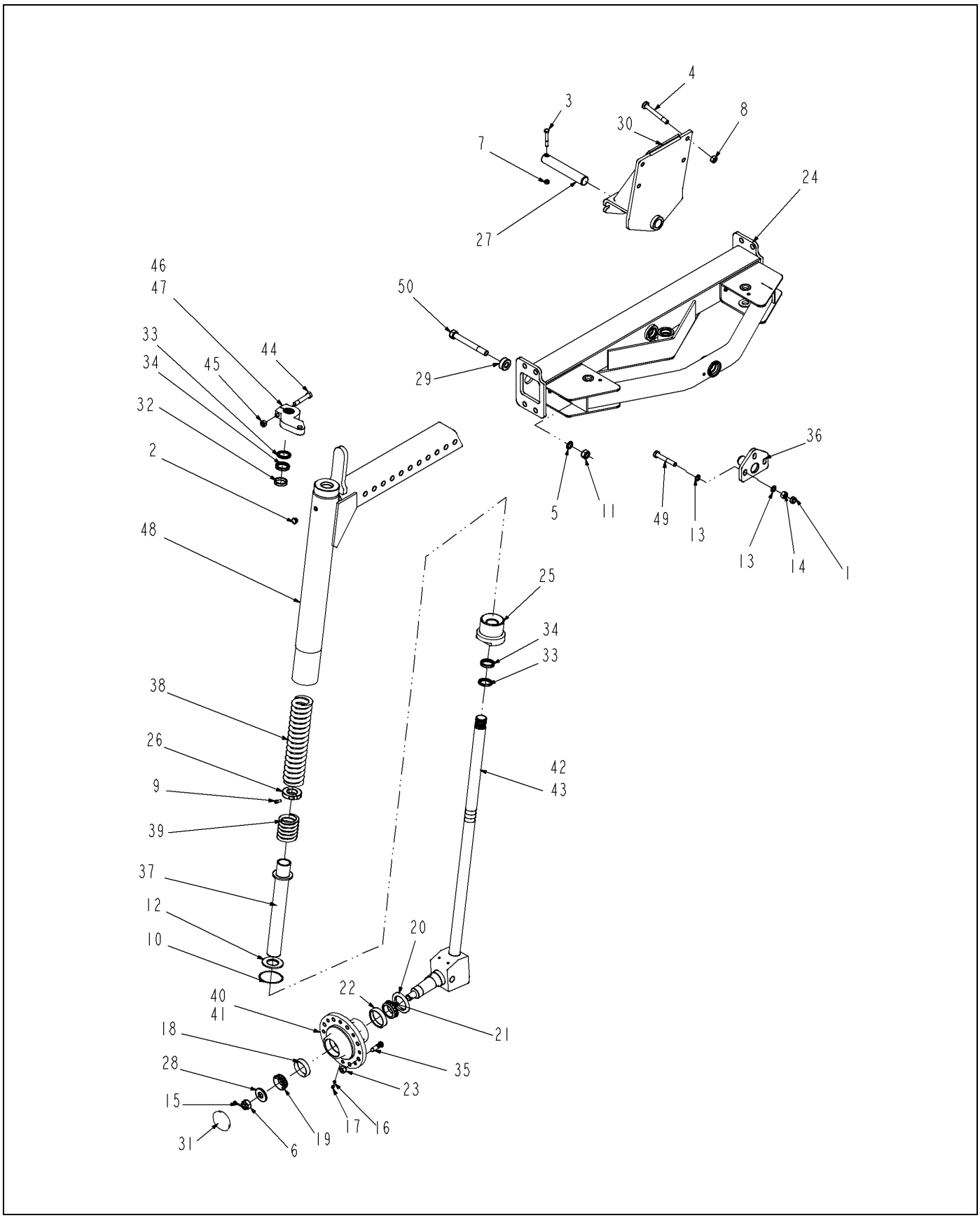

6803933-08-R392-.TIF

Copyright © 2007 AGCO Corporation

ITEM	PART #	QTY	DESCRIPTION	COMMENTS
1	WR11536	3	NUT-JAM, 5/8-18UNF G5 MIN	
2	WR13089	2	PLUG-HEX HEAD,.38 NPT SS	
3	WR55051	1	SCREW-CAP HEX M10 X 70	
4	WR55067	4	SCREW-CAP HEX M16 X 120	
5	WR55078	4	WASHER-PLAIN,20MM ID,LC,	
6	WR55099	2	NUT-CASTLE,1-14UNF	
7	WR55272	1	NUT-LOCK,M10 X 1.5,PREV	
8	WR55274	4	NUT-LK,M16X2.0,PREV TORQ,ZY	
9	WR55340	4	SCREW-CAP SOCK 5/16 NF X	
10	WR55447	2	O RING-3.500 ID X .139 CS	
11	WR120510	4	NUT,M20X2.5,HEX LKNYC8 YZN	
12	WR125694	2	BUSHING-SPINDLE,FRONT	
13	AG517568	6	WASHER FLAT 16MM HARDENEDBLACK	
14	AG551937	3	NUT 0.62-18NF HEX ZN REG	
15	AG559768	2	PIN COTTER 0.18X1.75 ZN	
16	AG561892	2	FITTING LUBE STR 0.25UNF	
17	AG562629	2	CAP GREASE PLASTIC	
18	6511330	2	BEARING-CUP	
19	6511331	2	BEARING-CONE	
20	6513441	2	SEAL	
21	6519925	2	BEARING-CONE	
22	6519926	2	BEARING-CUP	
23	6564669	16	NUT-WHEEL	
24	6595398	1	FRAME ASSY	SEE PAGE 4-1
25	6618540	2	HEAD	
26	6618542	2	COLLAR-CLAMPING	
27	6618562	1	PIN	
28	6626165	2	WASHER	
29	6626213	4	SPACER	
30	6627316	1	BRACKET-W/A	
31	6656492	2	CAP-CHAINCASE	
32	6658256	2	RING-WEAR	
33	6666544	4	ROD-WIPER	
34	6667327	4	ROD-SEAL	
35	6709170	16	BOLT-WHEEL	
36	6800710	1	BRACKET-W/A	
39	6801738	2	SPACER-W/A	
40	6802195	2	SPRING	
41	6802196	2	SPRING	
42	6803787	1	HUB-MACH,LH	
43	6803788	1	HUB-MACH,RH	
44	6803930	1	SHAFT-W/A,RH	
45	6803931	1	SHAFT-W/A,LH	
46	401022X1	2	BOLT-9/16-12X3.75 GR8 HH ZY	
47	401023X1	2	NUT-9/16-12 GR8 HH ZY	
48	505401D1	1	ARM,STEERING LH	
49	WR55647	3	SCREW-HEX 5/8X18UNFX4 GR8	
50	WR55968	4	SCREW HEX 20 X 170 GR8.8	

Copyright © 2007 AGCO Corporation

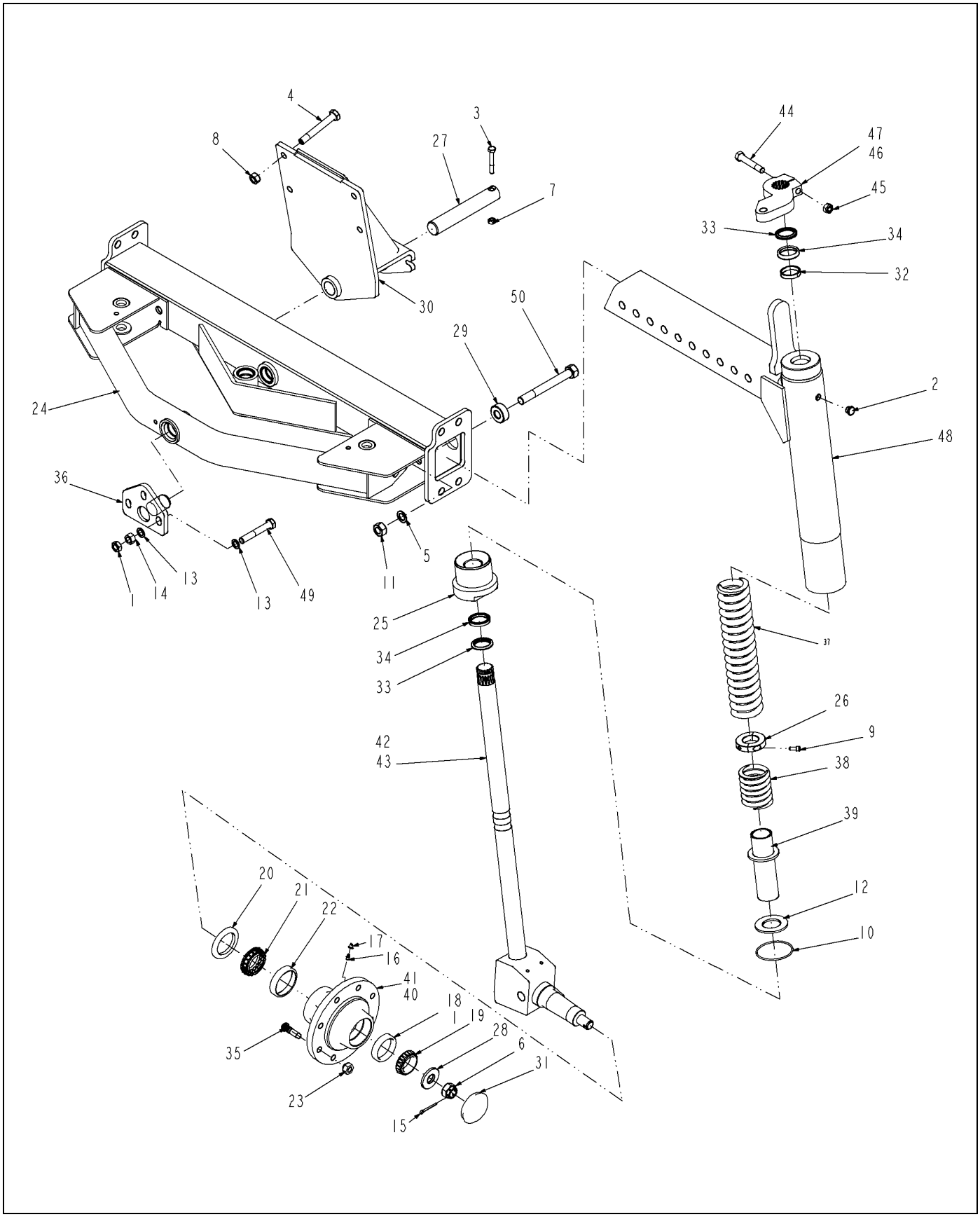

6803935-06-R392-.TIF

Copyright © 2007 AGCO Corporation

ITEM	PART #	QTY	DESCRIPTION	COMMENTS
1	WR11536	3	NUT-JAM, 5/8-18UNF G5 MIN	
2	WR13089	2	PLUG-HEX HEAD,.38 NPT SS	
3	WR55051	1	SCREW-CAP HEX M10 X 70	
4	WR55067	4	SCREW-CAP HEX M16 X 120	
5	WR55078	4	WASHER-PLAIN,20MM ID,LC,	
6	WR55099	2	NUT-CASTLE,1-14UNF	
7	WR55272	1	NUT-LOCK,M10 X 1.5,PREV	
8	WR55274	4	NUT-LK,M16X2.0,PREV TORQ,ZY	
9	WR55340	4	SCREW-CAP SOCK 5/16 NF X	
10	WR55447	2	O RING-3.500 ID X .139 CS	
12	WR120510	4	NUT,M20X2.5,HEX LKNYC8 YZN	
13	WR125694	2	BUSHING-SPINDLE,FRONT	
14	AG551937	3	NUT 0.62-18NF HEX ZN REG	
15	AG559768	2	PIN COTTER 0.18X1.75 ZN	
16	AG561892	2	FITTING LUBE STR 0.25UNF	
17	AG562629	2	CAP GREASE PLASTIC	
18	6511330	2	BEARING-CUP	
19	6511331	2	BEARING-CONE	
20	6513441	2	SEAL	
21	6519925	2	BEARING-CONE	
22	6519926	2	BEARING-CUP	
23	6564669	16	NUT-WHEEL	
24	6595456	1	FRAME ASSY	SEE PAGE 4-2
25	6618540	2	HEAD	
26	6618542	2	COLLAR-CLAMPING	
27	6618562	1	PIN	
28	6626165	2	WASHER	
29	6626213	4	SPACER	
30	6627316	1	BRACKET-W/A	
31	6656492	2	CAP-CHAINCASE	
32	6658256	2	RING-WEAR	
33	6666544	4	ROD-WIPER	
34	6667327	4	ROD-SEAL	
35	6709170	16	BOLT-WHEEL	
36	6800710	1	BRACKET-W/A	
37	6802195	2	SPRING	
38	6802196	2	SPRING	
39	6802201	2	SPACER-W/A	
40	6803787	1	HUB-MACH,LH	
41	6803788	1	HUB-MACH,RH	
42	6803938	1	SHAFT-W/A,LH	
43	6803939	1	SHAFT-W/A,RH	
44	401022X1	2	BOLT-9/16-12X3.75 GR8 HH ZY	
45	401023X1	2	NUT-9/16-12 GR8 HH ZY	
46	505401D1	1	ARM,STEERING LH	
47	505402D1	1	ARM,STEERING RH	
48	516953D1	2	AXLE WLDMT-WF 72 IN	
50	WR55647	3	SCREW-HEX 5/8X18UNFX4 GR8	

Copyright © 2007 AGCO Corporation

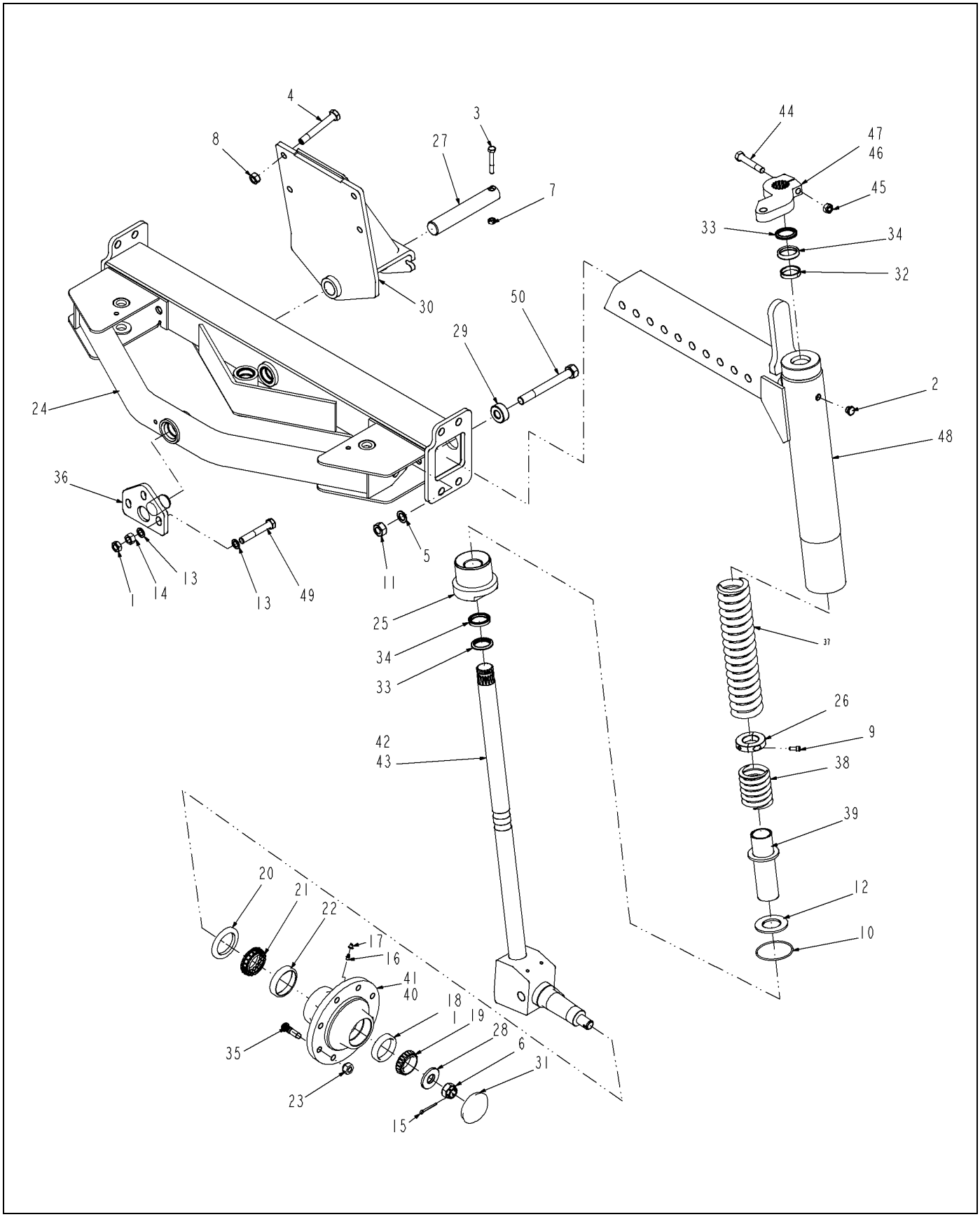

6803935-06-R392-.TIF

Copyright © 2007 AGCO Corporation

ITEM	PART #	QTY	DESCRIPTION	COMMENTS
51	WR55968	4	SCREW HEX 20 X 170 GR8.8	

Copyright © 2007 AGCO Corporation

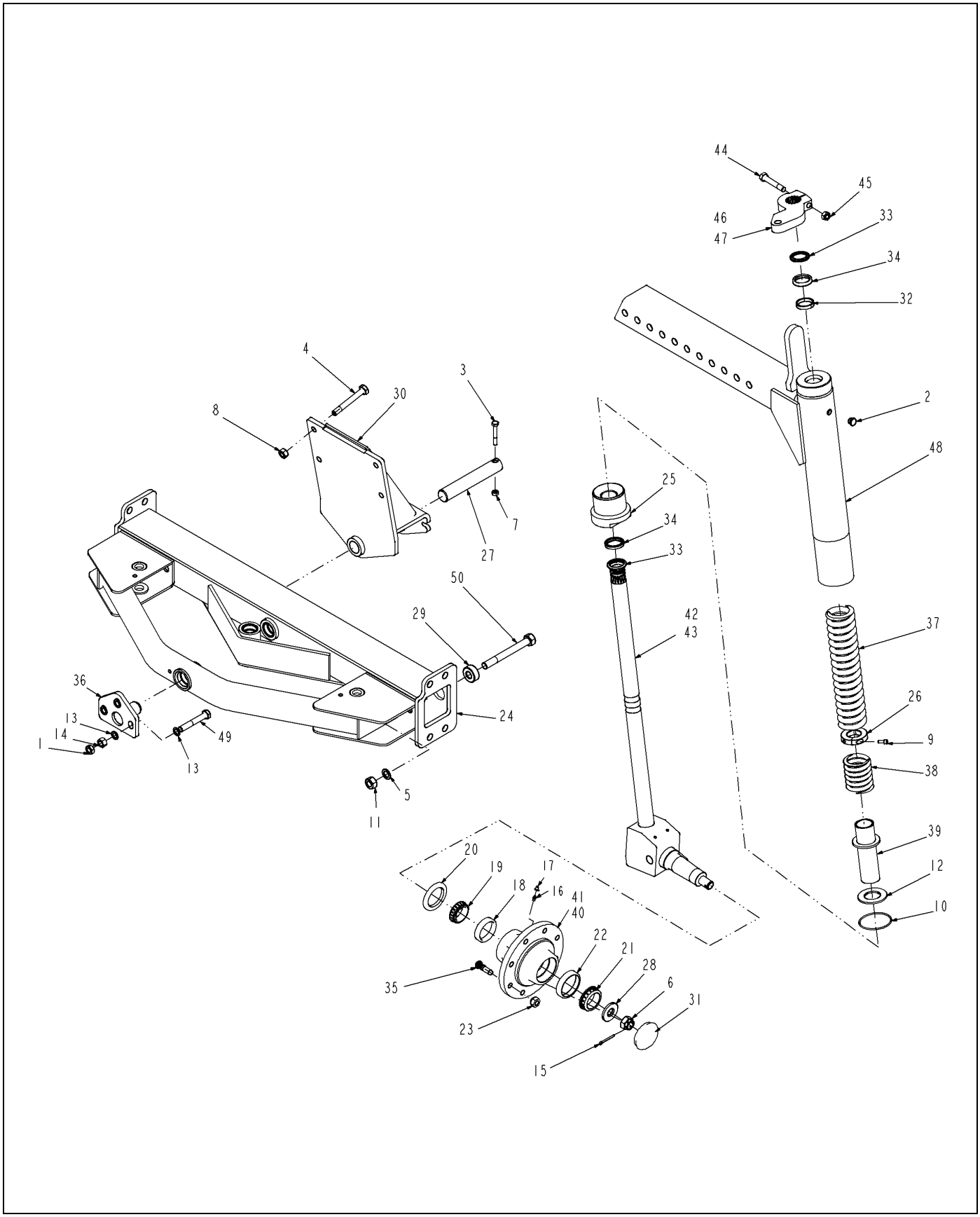

6803944-07-R392-.TIF

Copyright © 2007 AGCO Corporation

ITEM	PART #	QTY	DESCRIPTION	COMMENTS
1	WR11536	3	NUT-JAM, 5/8-18UNF G5 MIN	
2	WR13089	2	PLUG-HEX HEAD,.38 NPT SS	
3	WR55051	1	SCREW-CAP HEX M10 X 70	
4	WR55067	4	SCREW-CAP HEX M16 X 120	
5	WR55078	4	WASHER-PLAIN,20MM ID,LC,	
6	WR55099	2	NUT-CASTLE,1-14UNF	
7	WR55272	1	NUT-LOCK,M10 X 1.5,PREV	
8	WR55274	4	NUT-LK,M16X2.0,PREV TORQ,ZY	
9	WR55340	4	SCREW-CAP SOCK 5/16 NF X	
10	WR55447	2	O RING-3.500 ID X .139 CS	
11	WR120510	4	NUT,M20X2.5,HEX LKNYC8 YZN	
12	WR125694	2	BUSHING-SPINDLE,FRONT	
13	AG517568	6	WASHER FLAT 16MM HARDENEDBLACK	
14	AG551937	3	NUT 0.62-18NF HEX ZN REG	
15	AG559768	2	PIN COTTER 0.18X1.75 ZN	
16	AG561892	2	FITTING LUBE STR 0.25UNF	
17	AG562629	2	CAP GREASE PLASTIC	
18	6511330	2	BEARING-CUP	
19	6511331	2	BEARING-CONE	
20	6513441	2	SEAL	
21	6519925	2	BEARING-CONE	
22	6519926	2	BEARING-CUP	
23	6564669	16	NUT-WHEEL	
24	6595398	1	FRAME ASSY	SEE PAGE 4-1
25	6618540	2	HEAD	
26	6618542	2	COLLAR-CLAMPING	
27	6618562	1	PIN	
28	6626165	2	WASHER	
29	6626213	4	SPACER	
30	6627316	1	BRACKET-W/A	
31	6656492	2	CAP-CHAINCASE	
32	6658256	2	RING-WEAR	
33	6666544	4	ROD-WIPER	
34	6667327	4	ROD-SEAL	
35	6709170	16	BOLT-WHEEL	
36	6800710	1	BRACKET-W/A	
37	6802195	2	SPRING	
38	6802196	2	SPRING	
39	6802201	2	SPACER-W/A	
40	6803787	1	HUB-MACH,LH	
41	6803788	1	HUB-MACH,RH	
42	6803938	1	SHAFT-W/A,LH	
43	6803939	1	SHAFT-W/A,RH	
44	401022X1	2	BOLT-9/16-12X3.75 GR8 HH ZY	
45	401023X1	2	NUT-9/16-12 GR8 HH ZY	
46	505401D1	1	ARM,STEERING LH	
47	505402D1	1	ARM,STEERING RH	
48	516954D1	2	AXLE WLDMT-80 IN -108 IN	
49	WR55647	3	SCREW-HEX 5/8X18UNFX4 GR8	
50	WR55968	4	SCREW HEX 20 X 170 GR8.8	

Copyright © 2007 AGCO Corporation

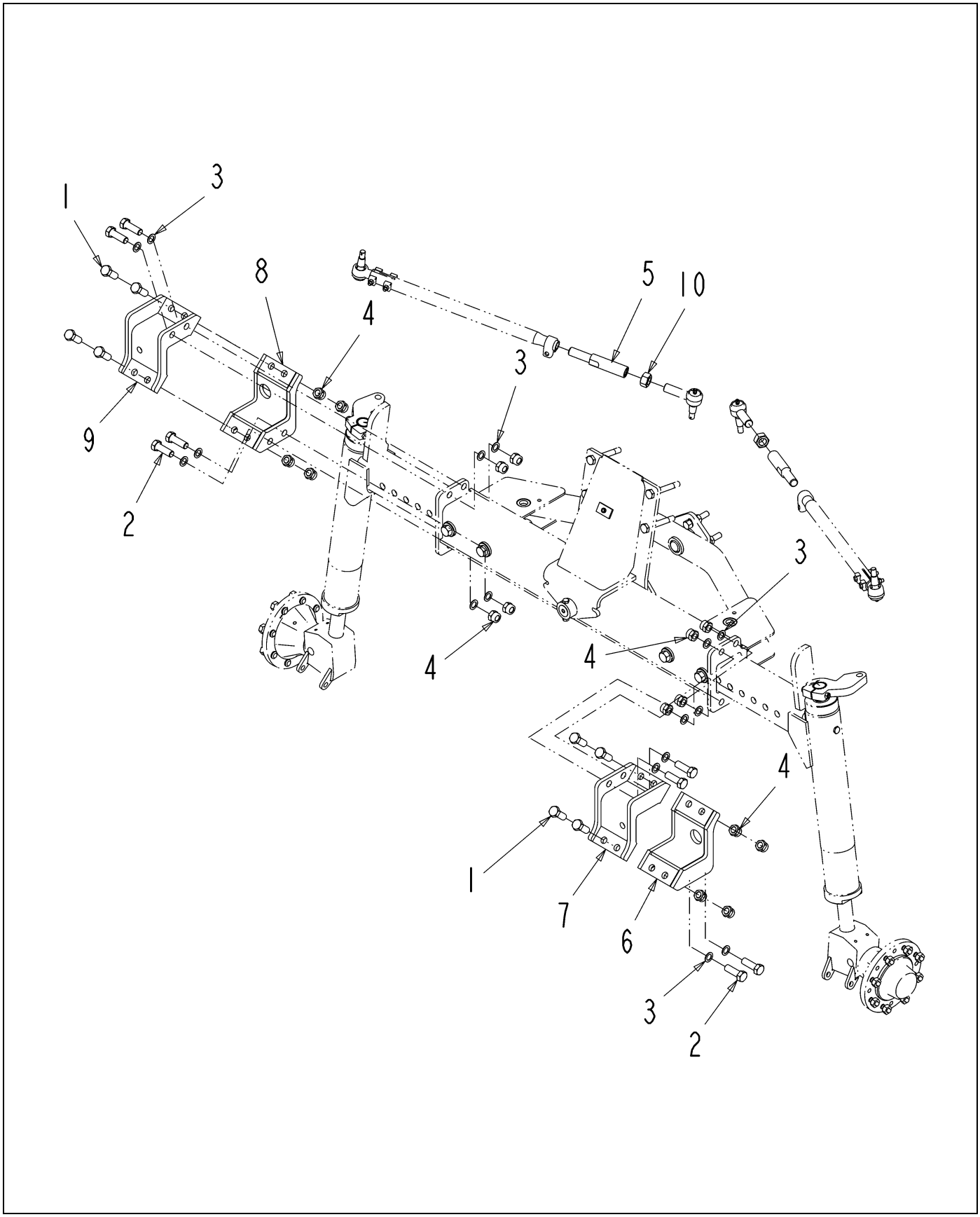

131685-B.TIF

Copyright © 2007 AGCO Corporation

EXTENSION INSTL-FRONT

ITEM	PART #	QTY	DESCRIPTION	COMMENTS
1	WR55059	8	SCREW-CAP HEX M20 X 50	
2	WR55060	8	SCREW-CAP HEX M20 X 60	
3	WR55078	16	WASHER-PLAIN,20MM ID,LC,	
4	WR55275	16	NUT-LOCK,M20 X 2.0,PREV	
5	6626941	2	ADAPTER	
6	6626942	1	EXTENSION-FRONT,MACH,LH	
7	6626943	1	EXTENSION-FRONT,MACH,LH	
8	6626948	1	EXTENSION-FRONT,MACH,RH	
9	6626950	1	EXTENSION-FRONT,MACH,RH	
10	6627290	2	NUT-HEX	

Copyright © 2007 AGCO Corporation

FUEL INSTL-4000 6-1

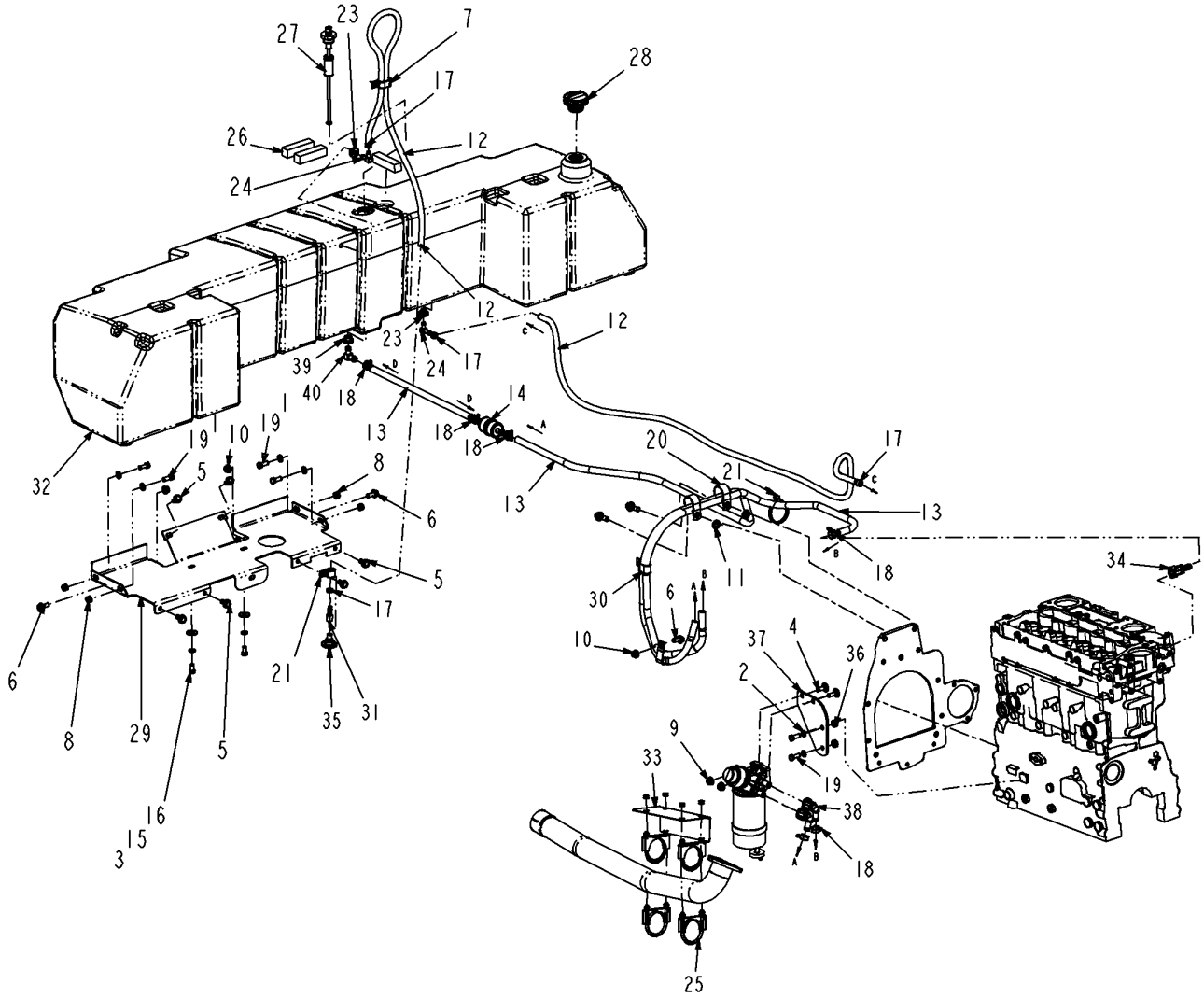

515735D1-02-R320-.TIF

Copyright © 2007 AGCO Corporation

ITEM	PART #	QTY	DESCRIPTION	COMMENTS
1	WR55075	4	WASHER-FL,M10,ZN,REG	
2	WR55106	2	WASHER-LOCK SPRING,10 MM	
3	WR55158	2	WASHER-FLAT,10MM ID,	
4	WR55174	2	BOLT-CARRIAGE,M10 X 30,	
5	WR55191	6	HEX HEAD,THREAD ROLLING SCREW	
6	WR55215	3	SCREW-HEX FLG,M10X1.5X25 CL8.8	
7	WR55247	1	CLAMP-SUPPORT CUSHION DBL	
8	WR55272	4	NUT-LOCK,M10 X 1.5,PREV	
9	WR55281	2	NUT-FLANGE,M10 X 1.5	
10	WR55301	3	NUT-FLANGE,M10 X 1.5,PREV	
11	WR129762	2	WASHER-FLAT,M12,ZN,HARD	
12	CH103-2529	-	HOSE-BULK FUEL 9.52 ID [BULK: 28.167 CM]	
13	AG510947	-	HOSE HYD 0.50 BULK 250PSI WP [BULK: 84 FT]	
14	AG524540	1	STRAINER-INLINE,0.50,100 MESH	
15	AG550191	2	WASHER 0.37 LK ZN REG	
16	AG551503	2	BOLT 0.37-16NCX 0.75 G5 ZN HHD	
17	AG561025	4	CLAMP HOSE .218 TO .625 U5S	
18	AG561366	6	CLAMP 0.25-0.87 HOSE #6 NARROW	
19	AG561683	6	BOLT M10-1.5 X 25MM G8.8 ZN HH	
20	AG561895	2	CLAMP 1.50 HOSE COATED	
21	AG562237	1	CLAMP CTD 0.75IDX0.75WIDE	
22	AG562496	AR	TIE CABLE 15.0 .18-4.00 BLACK	
23	6553411	2	BUSHING	
24	6553412	2	ELBOW-90,INV FLARE	
25	6595786	2	CLAMP-FULL CIRCLE	
26	6626654	3	FOAM-STRIP	
27	6658958	1	SENSOR-FUEL	
28	6672325	1	CAP-FUEL	
29	6801830	1	SUPPORT-FUEL	
30	400665X1	2	CLIP-LOOP 19ID X 2	
31	401469X1	1	HOSEBARB-.25FNPT X .38	
32	515734D1	1	TANK- FUEL	
33	515744D1	1	SHIELD-HEAT,EXHAUST	
34	515749D1	1	ADAPTER - FUEL LINE 13MM	
35	515768D1	1	VENT-FUEL TANK	
36	517541D1	2	TUBE-SPACER	
37	517542D1	1	MOUNT-FUEL FILTER	
38	517543D1	2	ADAPTER - FUEL LINE, 90 DEG 13	
39	CH185-1512	1	GROMMET-RUBBER 20ODX14IDX15.7	
40	WR41842	1	ELBOW-90D, -10HB X -8HB	

Copyright © 2007 AGCO Corporation

CYL ASM-HYD,BM SWING, SC6080	7-1
CYLINDER-HYD,2.75X11X1.38	7-2
CYLINDER ASM- BOOM TIP FOLD	7-3
CYLINDER-HYD,2.00X16.00X1.25	7-4
VALVE INSTL-HYD,BM,6 BANK,4X50	7-5
VALVE ASM-HYD,BOOM,6 BANK,4X50	7-6
CYLINDER-HYD,2.25 X 1.00 X 6.5	7-7
TUBE INSTL-HYD,H FRAME	7-8
HOSE INSTL-HYD,H FRAME,4X50	7-9
CYL-HYD,1.75X16.84X1.25	7-10
HYD INSTL - H FRM	7-11
HYD INSTL - H FRM	7-12
ASM-VALVE,RELIEF,BOOM TIP	7-13
VALVE RELIEF-BOOM TIP	7-14
HYD. TANK INSTL	7-15
TANK ASM-HYD 60 GAL	7-16
RESERVOIR-HYD 60 GAL	7-17
BRAKE INSTL-4660	7-18
BRAKE INSTL-4660	7-19
VALVE-BRAKE MODULATING,	7-20
BRAKE INSTL-4460	7-21
BRAKE INSTL-4460	7-22
HYD INSTL-CHASSIS,4000AT	7-23
HYD INSTL-CHASSIS,4000AT	7-24
HYD INSTL-CHASSIS,4000AT	7-25
HYD INSTL-CHASSIS,4000AT	7-26
ASM VALVE-2 POSTION, FLOAT	7-27
GRIP ASSY-HANDLE	7-28
VALVE-FLOAT,2 POSITION	7-29
PUMP ASM-HYD	7-30
PUMP HYDRAULIC	7-31
HYD INSTL-CHASSIS,4000AT 60/80	7-32
HYD INSTL-CHASSIS,4000AT 60/80	7-33
HYD INSTL-CHASSIS,4000AT 60/80	7-34
HYD INSTL-WF STEERING	7-35
CYLINDER-HYD,1.75X6.19X1.00	7-36
HYD INSTL-80 AXLE ADJ, 4000	7-37
CYLINDER-HYD,2.00X20.00X1.00	7-38
CYLINDER-HYD,2.00X20.00X1.00	7-39
HYD INSTL-72 AXLE ADJ, 4000	7-40
CYLINDER-HYD,2.00X15.25X1.00	7-41
HOSE INSTL-BM TILT,SC6080,7X50	7-42
HOSE INSTL-BM TIP,SC6080,7X50	7-43
HOSE INSTL-HYD,BM LFT,4X50	7-44
CYLINDER-HYD,2.00X8.44X1.00	7-45
ASM VLAVE-HYD, H FRAME	7-46
HYD INSTL - H FRM	7-47
HYD INSTL - H FRM	7-48
ASM VALVE-HYD, H FRAME	7-49
HYD INSTL - NO H FRM	7-50
CYLINDER-HYD,1.75X16.84X1.00	7-51
ASM-VALVE CHARGE	7-52
ASM-SWITCH PRESSURE	7-53
ASM VALVE-HYD,4000,CHASSIS	7-54

FILTER ASM-HYD	7-55
HYD INSTL-BOOM FOLD	7-56
COOLER INSTL-AT	7-57
COOLER INSTL-AT	7-58
HYD TANK ASSEMBLY	7-59
CYLINDER-HYD,1.50X8.38X0.88	7-60
CYLINDER-HYD,2.00X4.00X1.00	7-61
CYLINDER-HYD,2.00X14.25X1.00	7-62
VALVE-HYD,BOOM,6 BANK	7-63
VALVE-HYD,BM LFT/TRK ADJ,3BANK	7-64

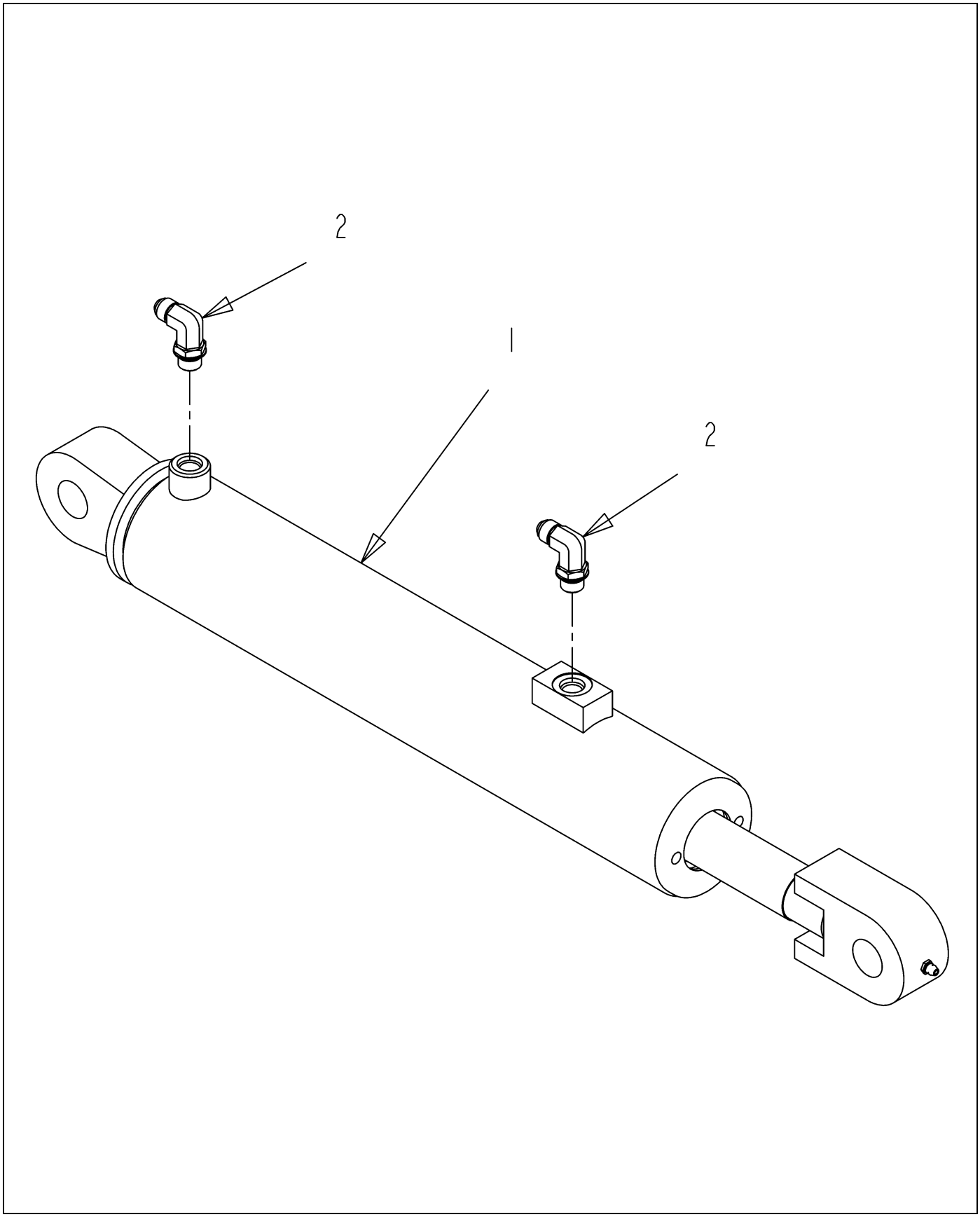

128811-B-1.TIF

Copyright © 2007 AGCO Corporation

CYL ASM-HYD,BM SWING, SC6080

ITEM	PART #	QTY	DESCRIPTION	COMMENTS
1	WR127886	1	CYLINDER-HYD,2.75X11X1.38	[A] SEE PAGE 7-2
2	AG562401	2	ELBOW -6MB90X-6MJ	
	FOOTNOTE [A]		ITEMS 7 - 17 CANNOT BE PURCHASED INDIVIDUALLY BUT ARE INCLUDED WITH THE SEAL KIT.	

Copyright © 2007 AGCO Corporation

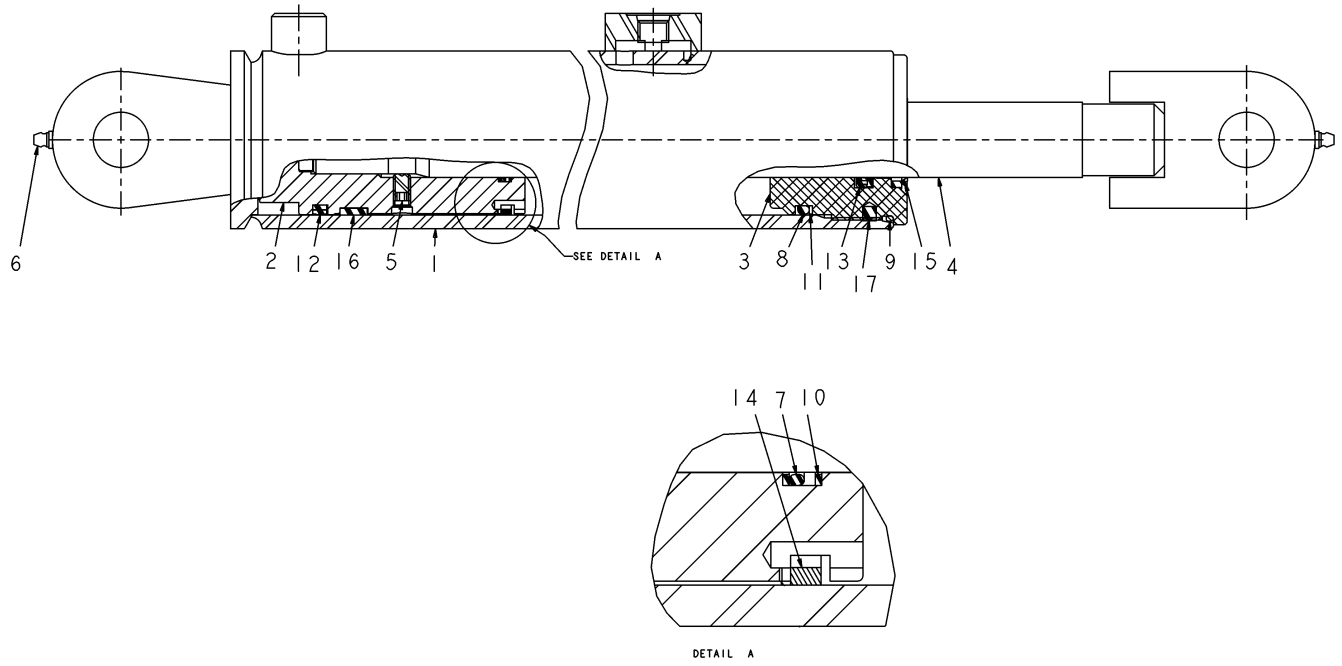

127886.TIF

Copyright © 2007 AGCO Corporation

CYLINDER-HYD,2.75X11X1.38

ITEM	PART #	QTY	DESCRIPTION	COMMENTS
REF	WR128061	-	SEAL KIT-092FN0116	
2	WR131652	1	PISTON	
3	WR131651	1	HEAD, GLAND	
4	WR131650	1	ROD, CYLINDER	
5	WR131649	1	SCREW, SET	
6	AG561892	2	FITTING LUBE STR 0.25UNF	
	FOOTNOTE		ITEMS 7 - 17 CANNOT BE PURCHASED INDIVIDUALLY BUT ARE INCLUDED WITH THE SEAL KIT.	

Copyright © 2007 AGCO Corporation

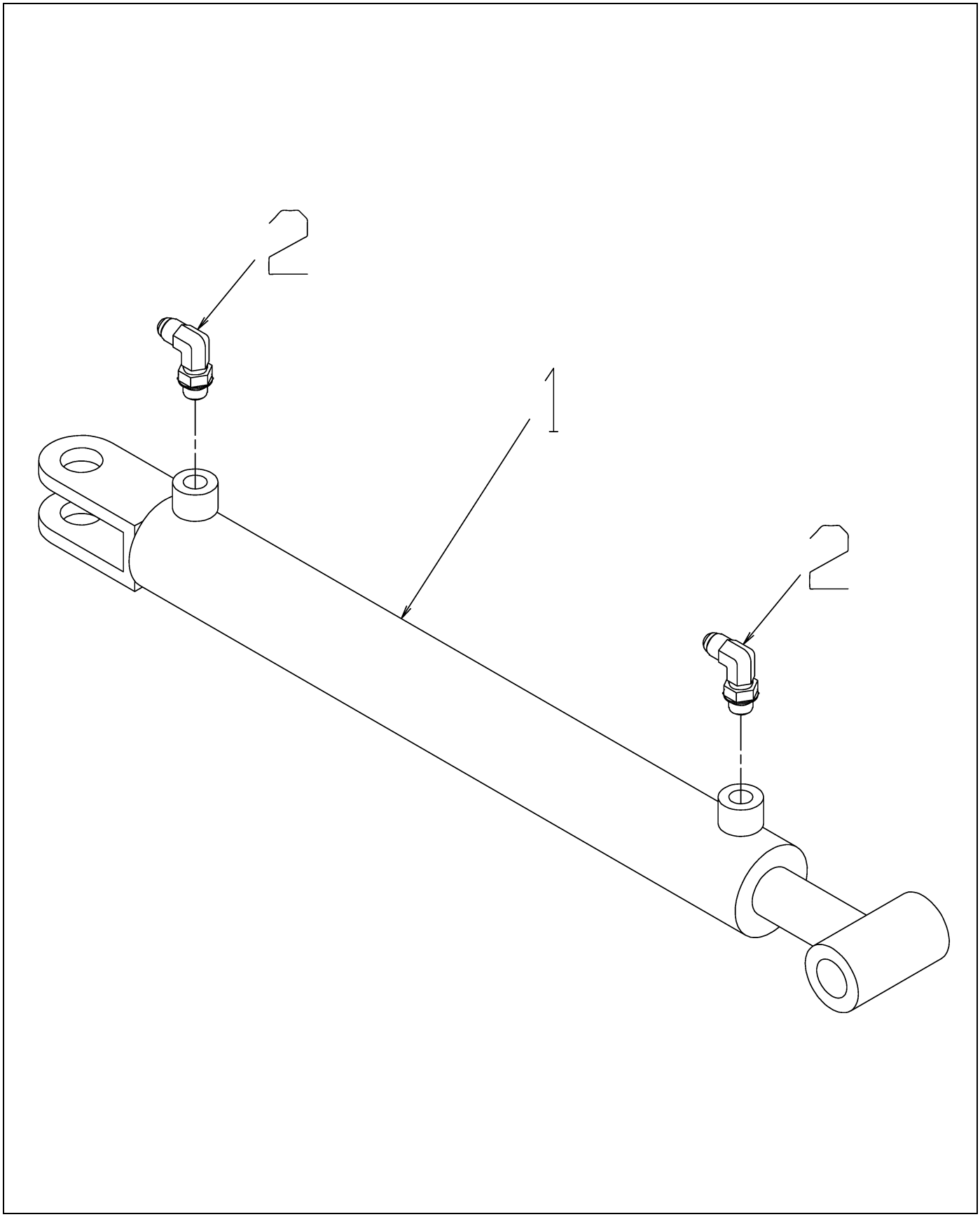

235991-B.TIF

Copyright © 2007 AGCO Corporation

CYLINDER ASM- BOOM TIP FOLD

ITEM	PART #	QTY	DESCRIPTION	COMMENTS
1	AG424374	1	CYLINDER-HYD,2.00X16.00X1.25	SEE PAGE 7-4
2	AG562354	2	ELBOW 90D 0.37MO-R X 0.25MJIC	[A]
	FOOTNOTE [A]		AG713166 O-RING	

Copyright © 2007 AGCO Corporation

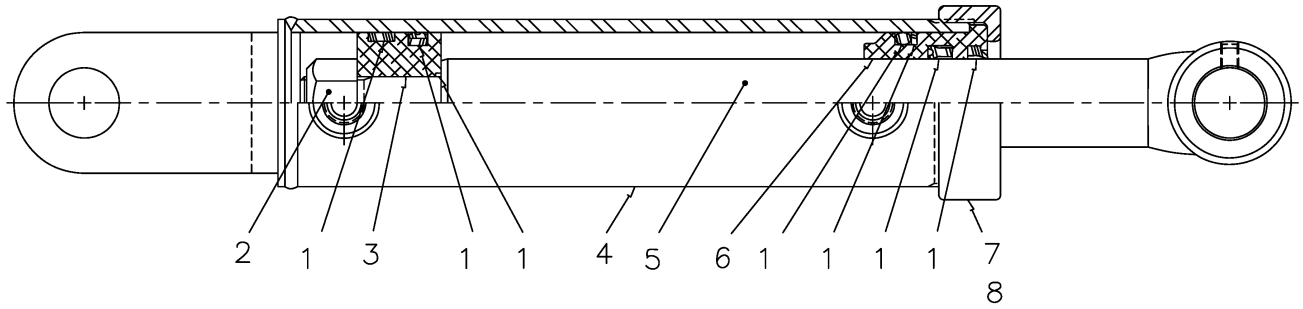

424374.TIF

Copyright © 2007 AGCO Corporation

CYLINDER-HYD,2.00X16.00X1.25

ITEM	PART #	QTY	DESCRIPTION	COMMENTS
1	AG714942	1	SEAL KIT 519117	
2	AG061235	1	NUT/LOCK UNF .75-16	
3	AG727125	1	PISTON	
4	AG727124	1	TUBE	
5	AG727123	1	ROD/CYLINDER	
6	AG727126	1	GLAND/HEAD	
7	AG138398	1	CAP/HEAD GLAND	
8	AG061236	1	SCREW/SET .313-18X.25	

Copyright © 2007 AGCO Corporation

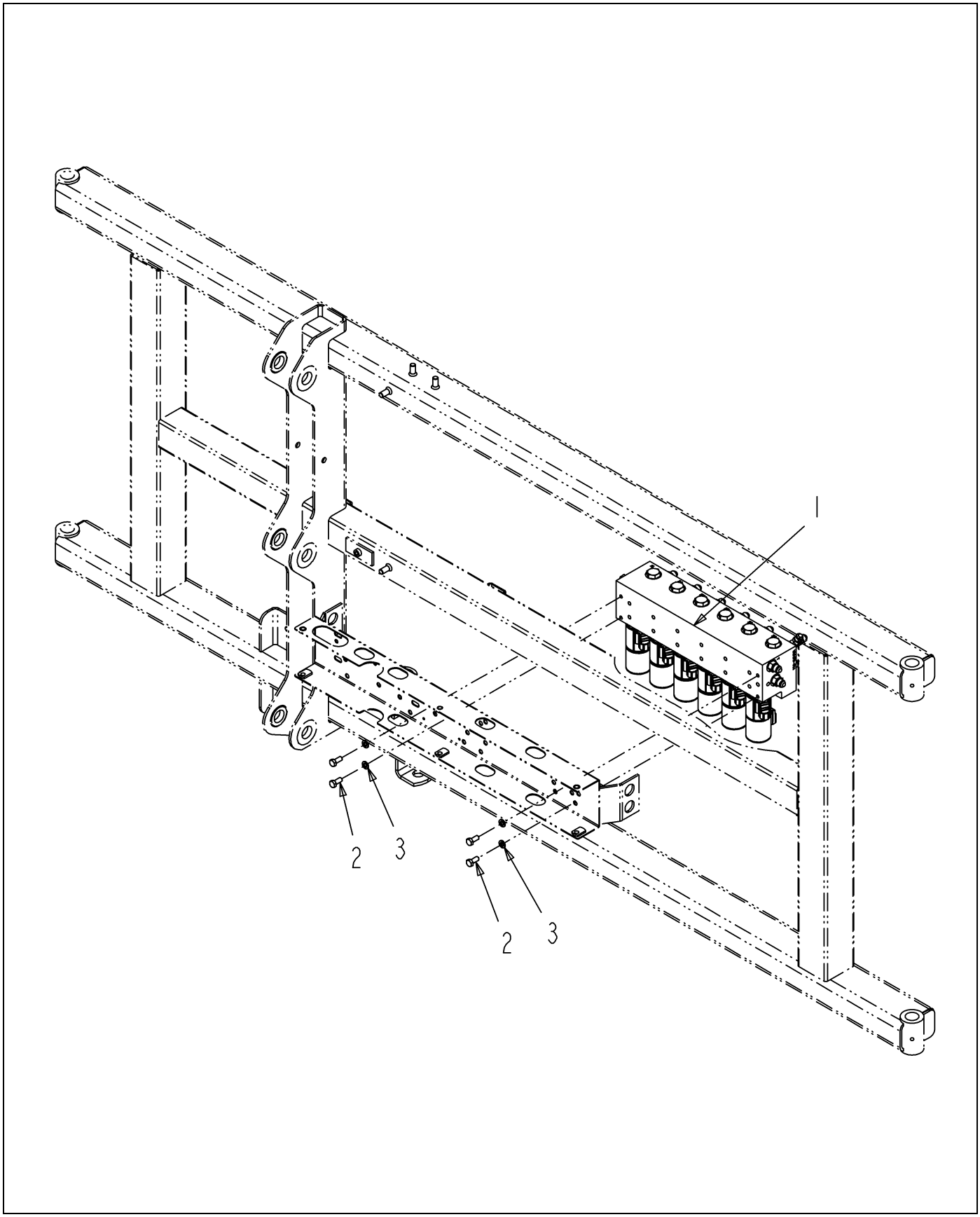

133621-02-M757-.TIF

Copyright © 2007 AGCO Corporation

VALVE INSTL-HYD,BM,6 BANK,4X50

ITEM	PART #	QTY	DESCRIPTION	COMMENTS
1	AG133622	1	VALVE ASM-HYD,BOOM,6 BANK,4X50	SEE PAGE 7-6
2	AG550183	4	BOLT 0.31-18NCX 0.75 G5 ZN HHD	
3	AG550205	4	WASHER 0.31 LK ZN REG	

Copyright © 2007 AGCO Corporation

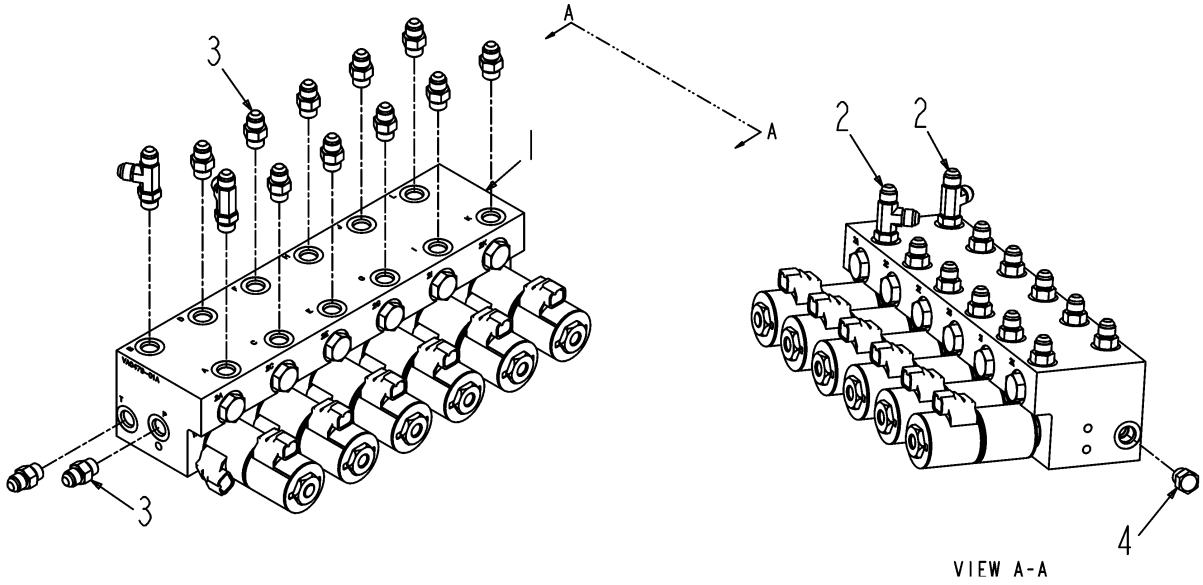

133622-A.TIF

Copyright © 2007 AGCO Corporation

VALVE ASM-HYD,BOOM,6 BANK,4X50

ITEM	PART #	QTY	DESCRIPTION	COMMENTS
1	WR122642	1	VALVE-HYD,BOOM,6 BANK	SEE PAGE 7-63
2	AG519123	2	TEE-RUN,STR THD -6	[A]
3	AG560693	12	ADAP STR 0.37MO-R X 0.37MJIC	
4	AG561797	1	PLUG 0.37MO-R HEX	[B]
	FOOTNOTE [A]		AG713166 O-RING	
	FOOTNOTE [B]		AG713166 O-RING	

Copyright © 2007 AGCO Corporation

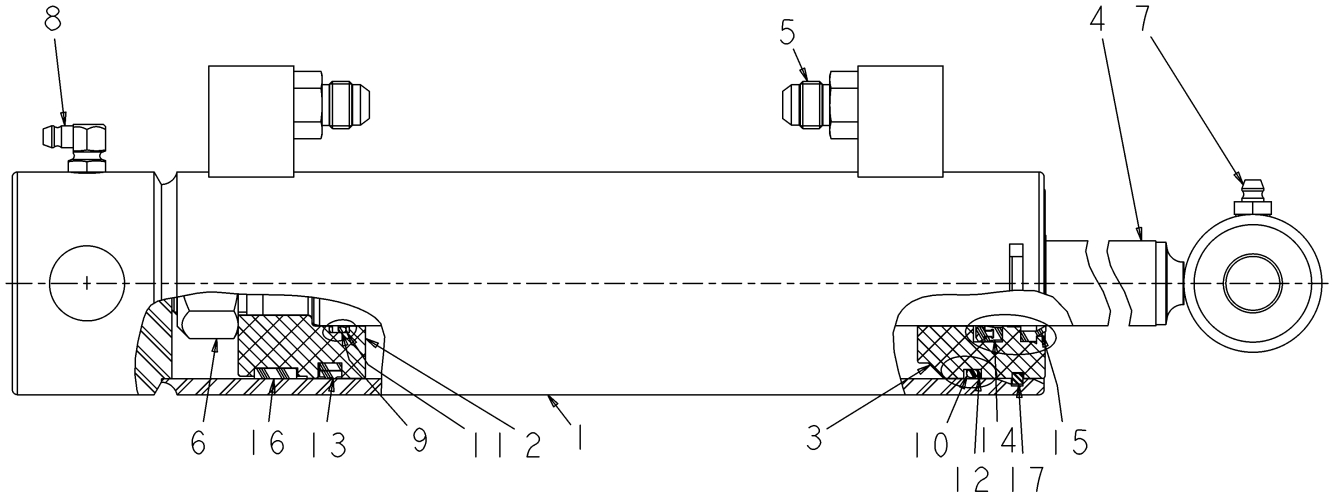

128010.TIF

Copyright © 2007 AGCO Corporation

CYLINDER-HYD,2.25 X 1.00 X 6.5

ITEM	PART #	QTY	DESCRIPTION	COMMENTS
REF	WR124932	-	KIT, SEAL	
2	WR131647	2	PISTON	
3	WR131646	1	HEAD, GLAND	
4	WR131645	1	ROD, CYLINDER	
5	WR131555	1	CONNECTOR	
6	WR606610	1	NUT 0.75-16NF HEX ZN C-LK	
7	AG550280	1	FITTING LUB.12-27NPTFX0.68	
8	AG559083	1	FITTING LUB 90D 0.125 NPTF	
	FOOTNOTE		ITEM 1 CANNOT BE PURCHASED INDIVIDUALLY BUT IS INCLUDED WITH THE CYLINDER.	
	FOOTNOTE		ITEMS 9 - 17 CANNOT BE PURCHASED INDIVIDUALLY BIT ARE INCLUDED IN THE SEAL KIT.	

Copyright © 2007 AGCO Corporation

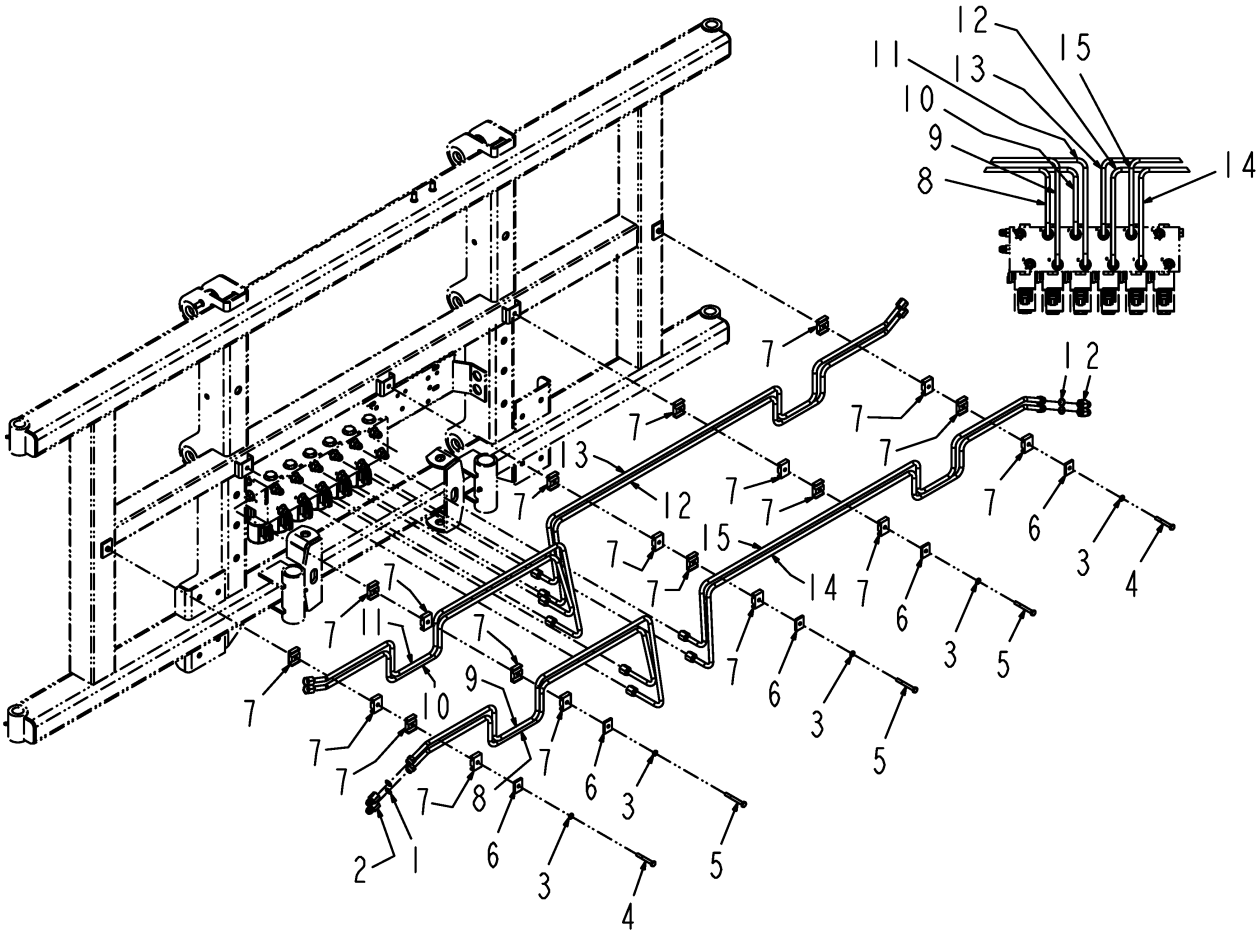

128929-G.TIF

Copyright © 2007 AGCO Corporation

TUBE INSTL-HYD,H FRAME

ITEM	PART #	QTY	DESCRIPTION	COMMENTS
1	WR28265	4	O-RING FOR -06 MB	
2	WR129367	4	ADAPTER-STR,.37FB X .37MJIC	
3	AG550493	5	WASHER 0.25 LK ZN REG	
4	AG551279	2	BOLT 0.25-20NCX 2.00 G5 ZN HHD	
5	AG562015	3	BOLT 0.25-20NCX 2.25 G5 ZN HHD	
6	6535422	5	WASHER-CLAMP	
7	6578870	20	CLAMP-TUBELINE	
8	WR37389	1	TUBE ASSY-CENTER HYD,ESP	
9	WR37390	1	TUBE ASSY-CENTER HYD,ESP	
10	WR37391	1	TUBE ASSY-CENTER HYD	
11	WR37392	1	TUBE ASSY-CENTER HYD	
12	WR37393	1	TUBE ASSY-CENTER HYD	
13	WR37394	1	TUBE ASSY-CENTER HYD	
14	WR37395	1	TUBE ASSY-CENTER HYD, ESP	
15	WR37396	1	TUBE ASSY-CENTER HYD, ESP	

Copyright © 2007 AGCO Corporation

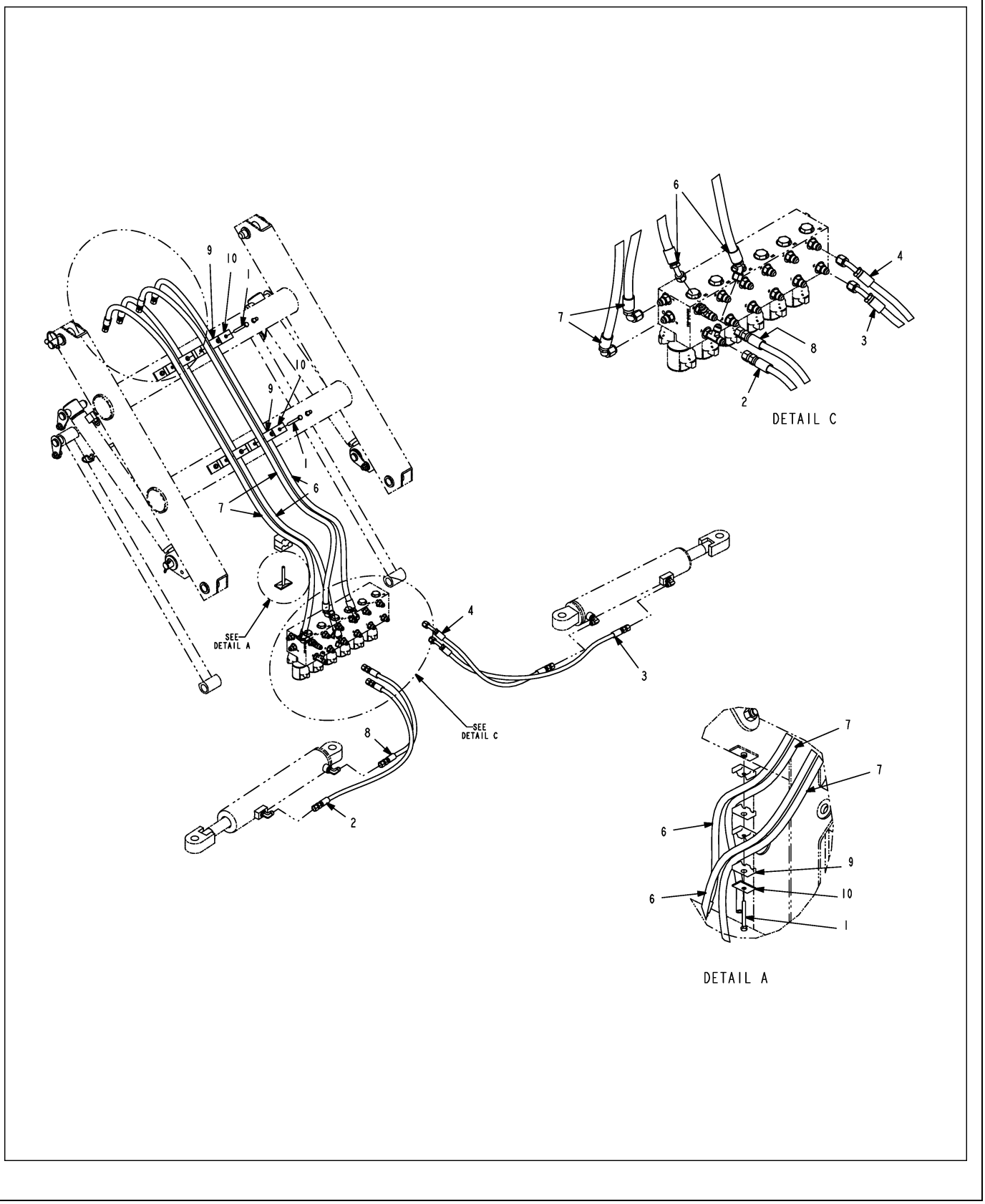

133623-04-N695-.TIF

Copyright © 2007 AGCO Corporation

HOSE INSTL-HYD,H FRAME,4X50

ITEM	PART #	QTY	DESCRIPTION	COMMENTS
1	WR55043	3	SCREW-CAP HEX M8 X 75	
2	WR124776	-	HOSE ASM-6X31.00 FJS/FJS	
3	WR128871	-	HOSE ASM-6X32.00 FJS/FJS45	
4	WR129177	-	HOSE ASM-6X23.00 FJS/FJS45	
5	AG133624	1	KIT-HOSE,HYD,H FRAME,4X50	
6	AG234213	-	HOSE ASM -6 75.00 R1	
7	AG235784	-	HOSE ASM -6 X 75.00 FJS/FJS90	
8	WR239152	-	HOSE ASM -6X19.00 FJS/FJS	
9	6577697	6	CLAMP-TUBLINE	
10	6652521	3	COVER-PLATE	

Copyright © 2007 AGCO Corporation

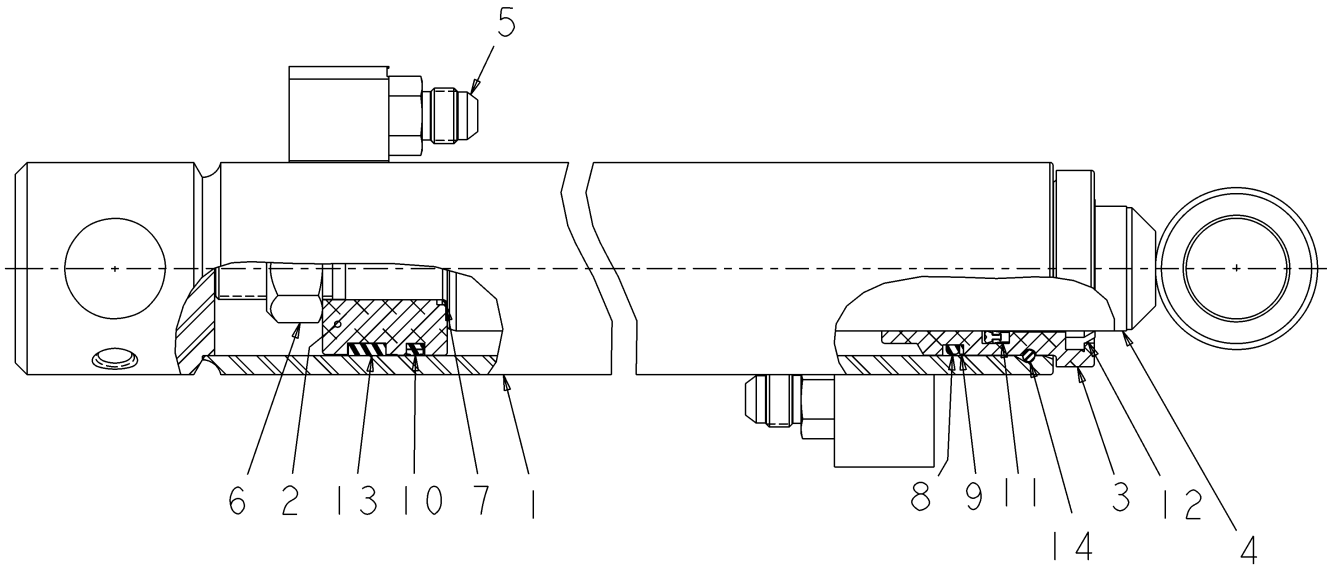

132565.TIF

Copyright © 2007 AGCO Corporation

CYL-HYD,1.75X16.84X1.25

ITEM	PART #	QTY	DESCRIPTION	COMMENTS
REF	WR134418	1	SEAL KIT-092DN0003	
1	WR13938	1	RECT-HRS, .105 X .75 X	
2	WR131625	1	PISTON	
3	WR139369	1	GLAND HEAD	
4	WR139370	1	ROD WELDMENT	
5	WR131555	2	CONNECTOR	
6	WR139371	1	LOCKNUT/UNF 5/8-18	
7	WR139372	1	O-RING	
8	WR139373	1	O-RING	
9	WR139374	1	RING/BACKUP	
10	WR139375	1	PAC/DISO	
11	WR139376	1	SEAL/Z DEEP	
12	AG712925	1	ROD WIPER 15453	
13	WR139377	1	WEARBAND/PRECISION	
14	WR139378	1	WRAP/ROUND IN WIRE	

Copyright © 2007 AGCO Corporation

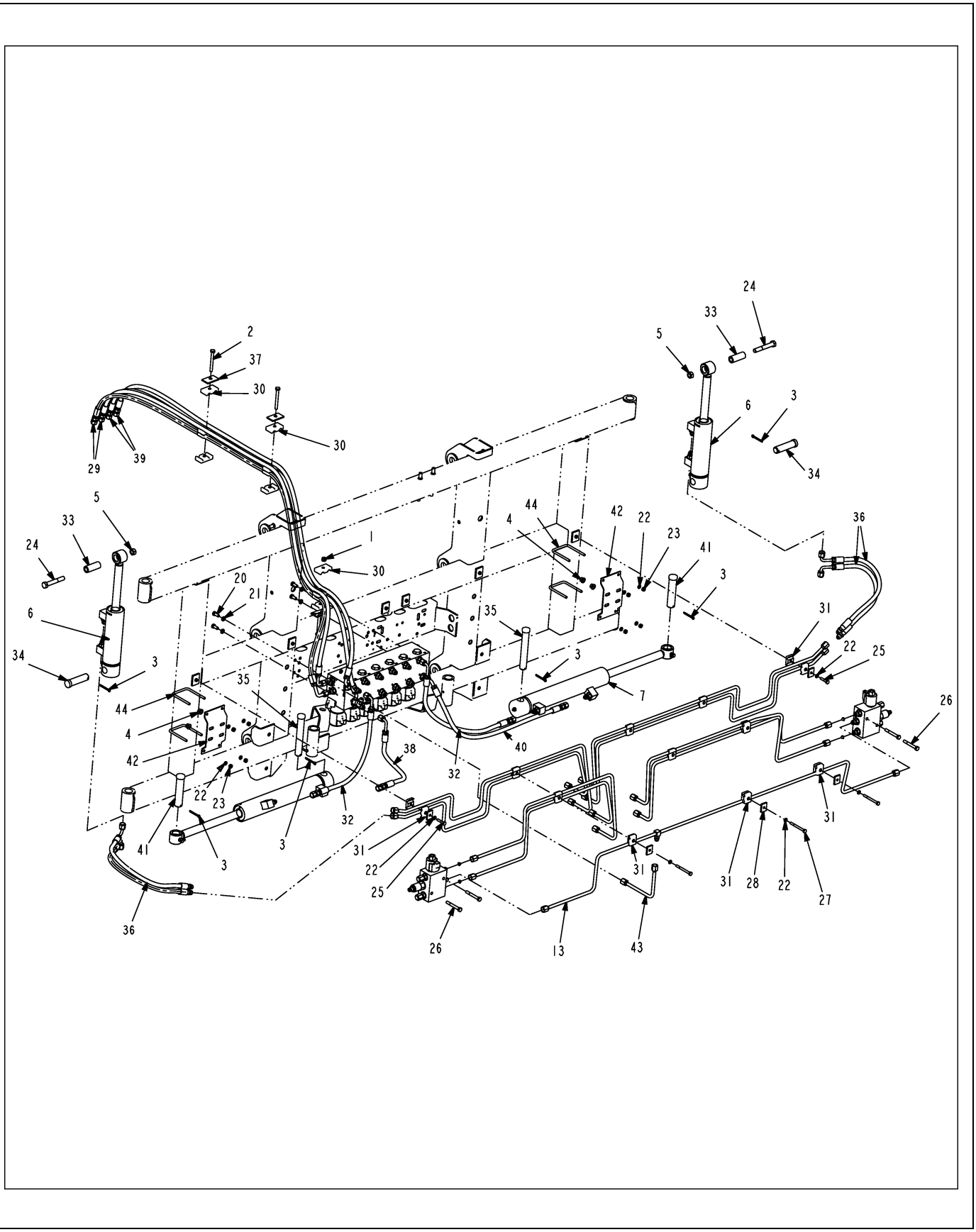

134265-07-N695-01.TIF

Copyright © 2007 AGCO Corporation

ITEM	PART #	QTY	DESCRIPTION	COMMENTS
1	WR32254	1	NUT-TOPLOCK,M8-1.25	
2	WR55043	3	SCREW-CAP HEX M8 X 75	
3	WR55083	2	PIN-COTTER,3/16 X 1 1/2	
4	WR55352	4	NUT-TOPLOCK,5/16-18UNC G8	
5	WR55354	-	NUT-TOPLOCK, 1/2-13UNC G8	
6	WR122415	2	CYLINDER-HYD,2.00X4.00X1.00	[A] SEE PAGE 7-61
7	WR129450	2	CYLINDER-HYD,2.00X8.44X1.00	[B] SEE PAGE 7-45
13	WR134274	1	TUBE ASM-RELIEF VALVE,RETURN	
20	AG550183	4	BOLT 0.31-18NCX 0.75 G5 ZN HHD	
21	AG550205	4	WASHER 0.31 LK ZN REG	
22	AG550493	14	WASHER 0.25 LK ZN REG	
23	AG550612	8	NUT 0.25-20NC HEX ZN REG	
24	AG553212	-	BOLT 0.50-13NCX 3.25 G5 ZN HHD	
25	AG558788	2	BOLT 0.25-20NCX 1.25 G5 ZN HHD	
26	AG561384	4	BOLT 0.31-18NCX 2.50 G5 ZN HHD	
27	AG561770	3	BOLT 0.25-20NCX 2.75 G5 ZN HHD	
28	6535422	5	WASHER-CLAMP	
29	6537283	2	HOSE-06FJX-06FJX90-04R1	
30	6577696	6	CLAMP-TUBELINE	
31	6578870	11	CLAMP-TUBELINE	
32	6587032	2	HOSE-06FJX-06FJX90-04R1	
33	6618175	-	BUSHING-STL, .875 OD	
34	6618187	-	PIN-CLEVIS	
35	6618227	-	PIN-CLEVIS	
36	6626580	4	HOSE-06FJX90-06MJ-04R1	
37	6652521	3	COVER-PLATE	
38	6700024	1	HOSE-06FJX-06FX90-04R1	
39	6801494	2	HOSE-06FJX-06FJX45-04R1	
40	6801495	1	HOSE-06FJX-06FJX45-04R1	
41	6802711	-	PIN-CLEVIS	
42	WR37774	2	MOUNT-RELIEF VALVE	
43	WR37821	1	TUBE ASSY-VALVE RETURN	
44	WR55582	4	U-BOLT,DRAWBAR	
	FOOTNOTE [A]		ITEMS 9 - 17 CANNOT BE PURCHASED INDIVIDUALLY BUT ARE INCLUDED IN THE SEAL KIT.	
	FOOTNOTE [B]		ITEM 9 - 16 CANNOT BE PURCHASED INDIVIDUALLY BUT ARE INCLUDED IN THE SEAL KIT.	
	FOOTNOTE [B]		ITEM 1 CANNOT BE PURCHASED INDIVIDUALLY BUT IS INCLUDED WITH THE CYLINDER.	

Copyright © 2007 AGCO Corporation

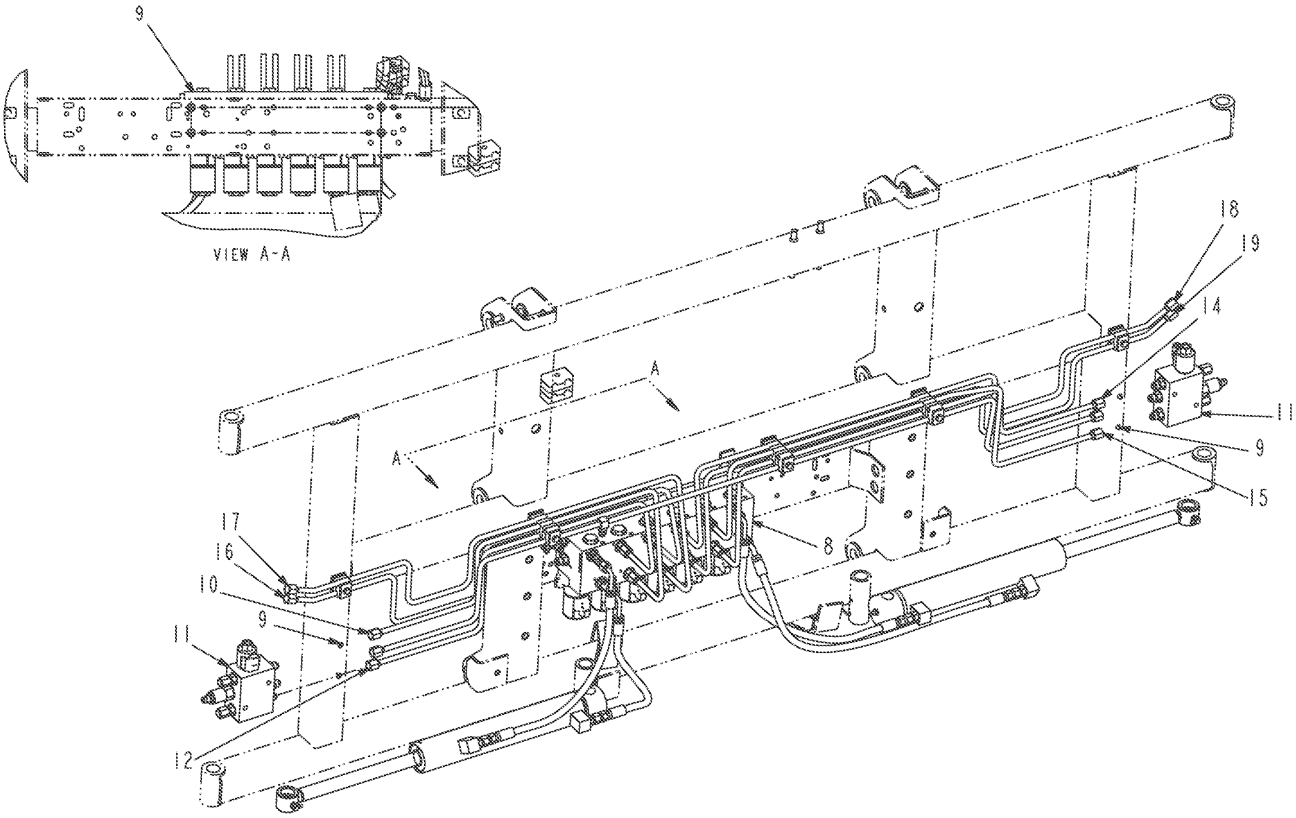

134265-07-N695-02.TIF

Copyright © 2007 AGCO Corporation

ITEM	PART #	QTY	DESCRIPTION	COMMENTS
8	AG134266	1	ASM VALVE-HYD, H FRAME	SEE PAGE 7-46
9	WR134267	4	ORIFICE-SEAL BONNET	
10	WR134268	1	TUBE ASM-HYD,CENTER	
11	AG134272	2	ASM-VALVE,RELIEF,BOOM TIP	SEE PAGE 7-13
12	WR134273	1	TUBE ASM-CENTER HYD	
14	WR134275	1	TUBE ASM-CENTER HYD	
15	WR134277	1	TUBE ASM-CENTER HYD	
16	WR134278	1	TUBE ASM-CENTER HYD	
17	WR134279	1	TUBE ASM-CENTER HYD	
18	WR134280	1	TUBE ASM-CENTER HYD	
19	WR134281	1	TUBE ASM-CENTER HYD	

Copyright © 2007 AGCO Corporation

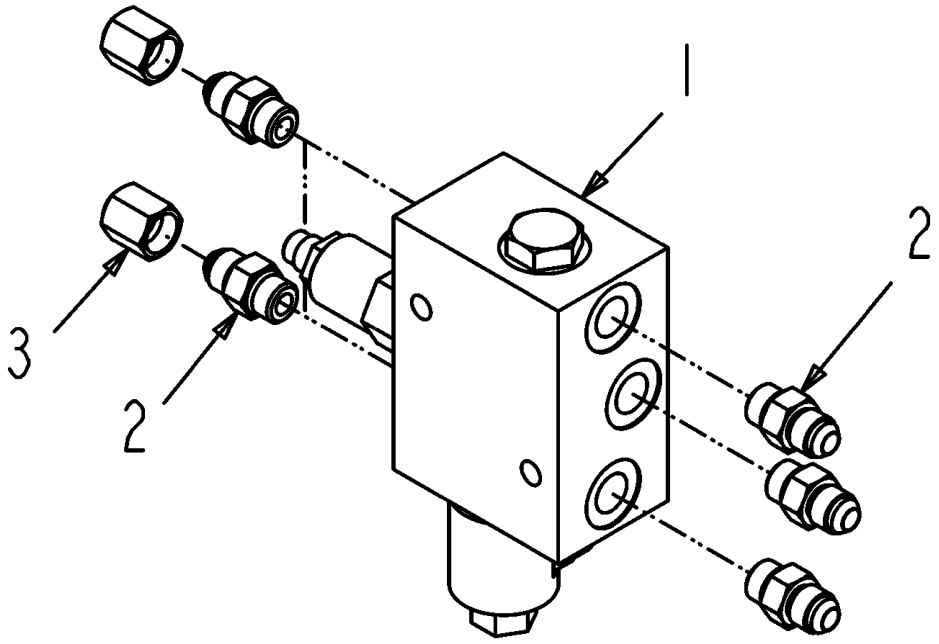

134272-A.TIF

Copyright © 2007 AGCO Corporation

ASM-VALVE,RELIEF,BOOM TIP

ITEM	PART #	QTY	DESCRIPTION	COMMENTS
1	WR134271	1	VALVE RELIEF-BOOM TIP	SEE PAGE 7-14
2	AG560693	5	ADAP STR 0.37MO-R X 0.37MJIC	
3	AG708307	2	NUT CAP 0.37 FJIC	

Copyright © 2007 AGCO Corporation

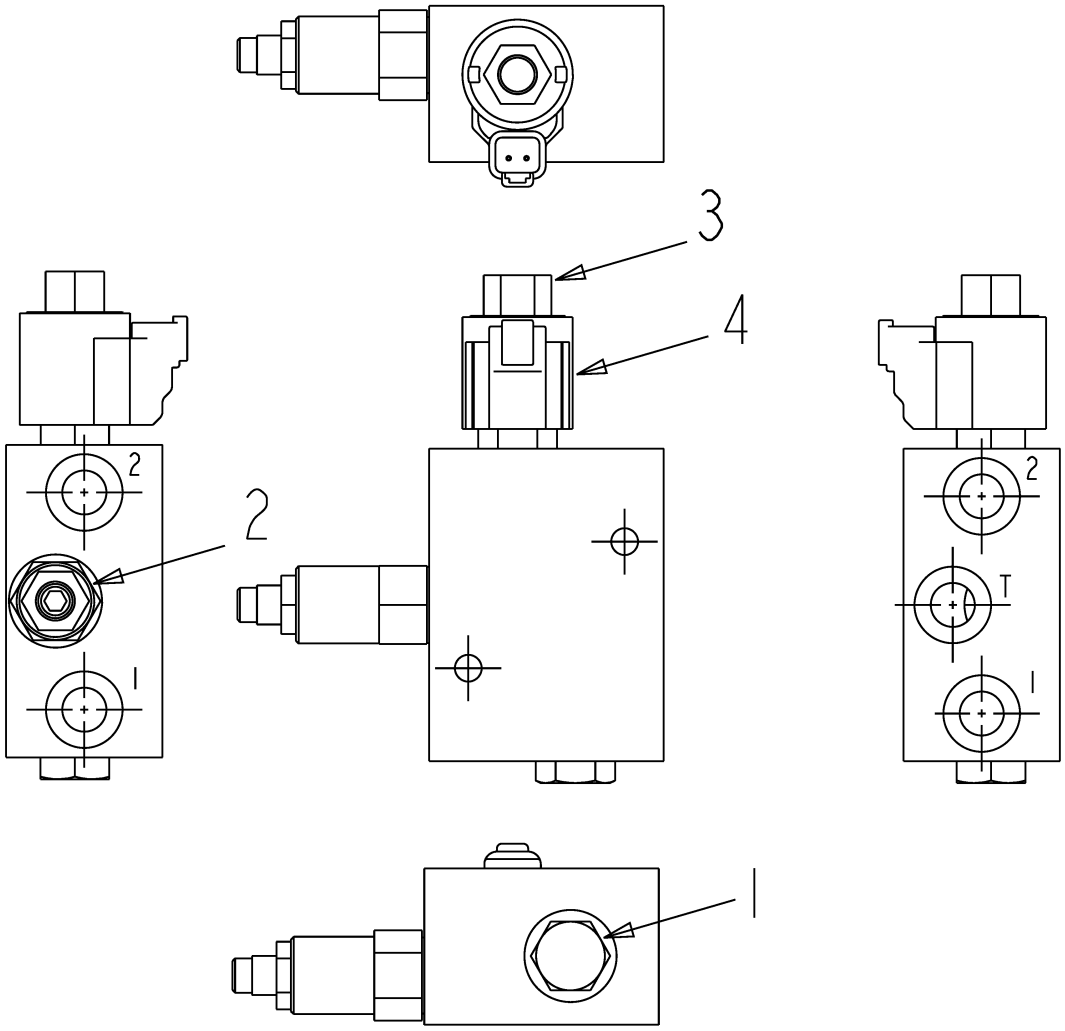

134271-A.TIF

Copyright © 2007 AGCO Corporation

VALVE RELIEF-BOOM TIP

ITEM	PART #	QTY	DESCRIPTION	COMMENTS
1	WR38768	1	VALVE-CARTRIDGE,CHECK-08	
2	WR38769	6	VALVE-CARTRIDGE,RELEIF-10	
3	L609465	1	VALVE- HYDRA FORCE	

Copyright © 2007 AGCO Corporation

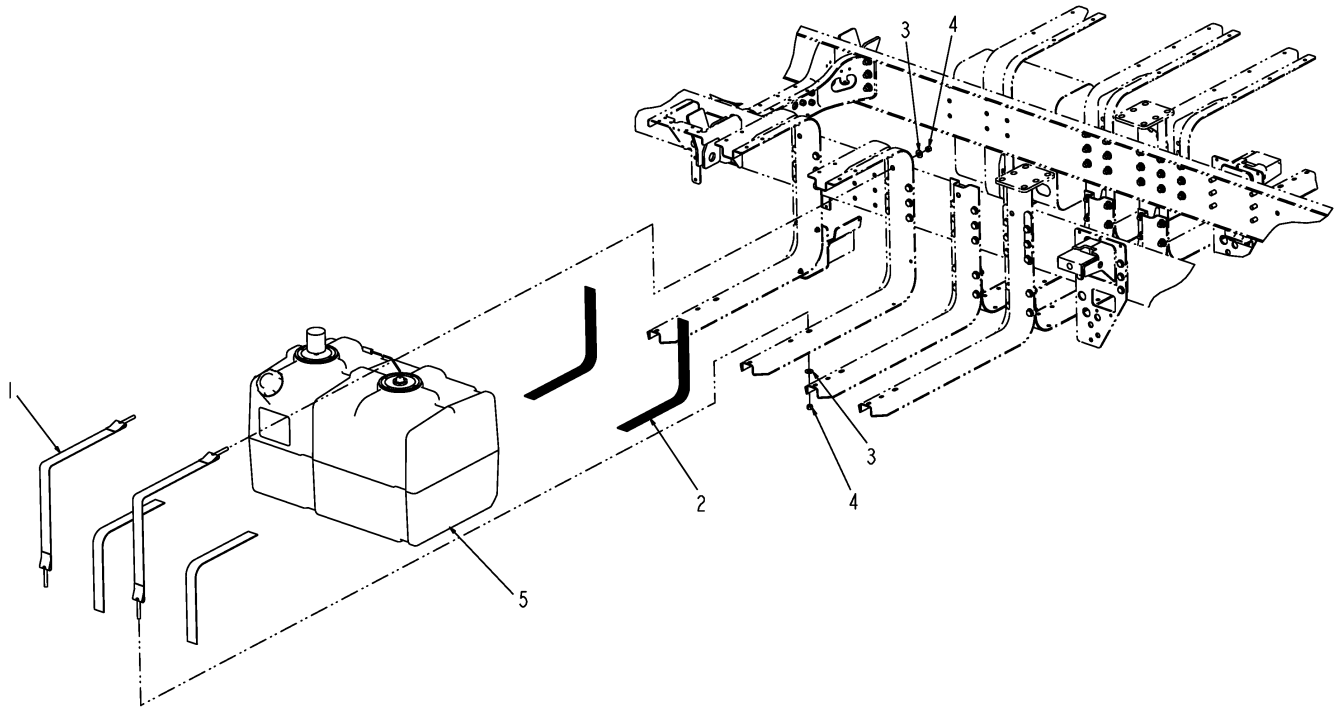

513482D1-01-N562-.TIF

Copyright © 2007 AGCO Corporation

HYD. TANK INSTL

ITEM	PART #	QTY	DESCRIPTION	COMMENTS
1	AG121830	2	STRAP WLDMT-HYD TANK	
2	AG122764	4	MATTING-RUBBER,2.00X38.00X.12	
3	AG550353	4	WASHER 0.50 FL ZN REG TYPE-B	
4	AG601152	4	NUT 0.50-13NC HEX ZN REG NY	
5	513483D1	1	TANK ASM-HYD 60 GAL	SEE PAGE 7-16

Copyright © 2007 AGCO Corporation

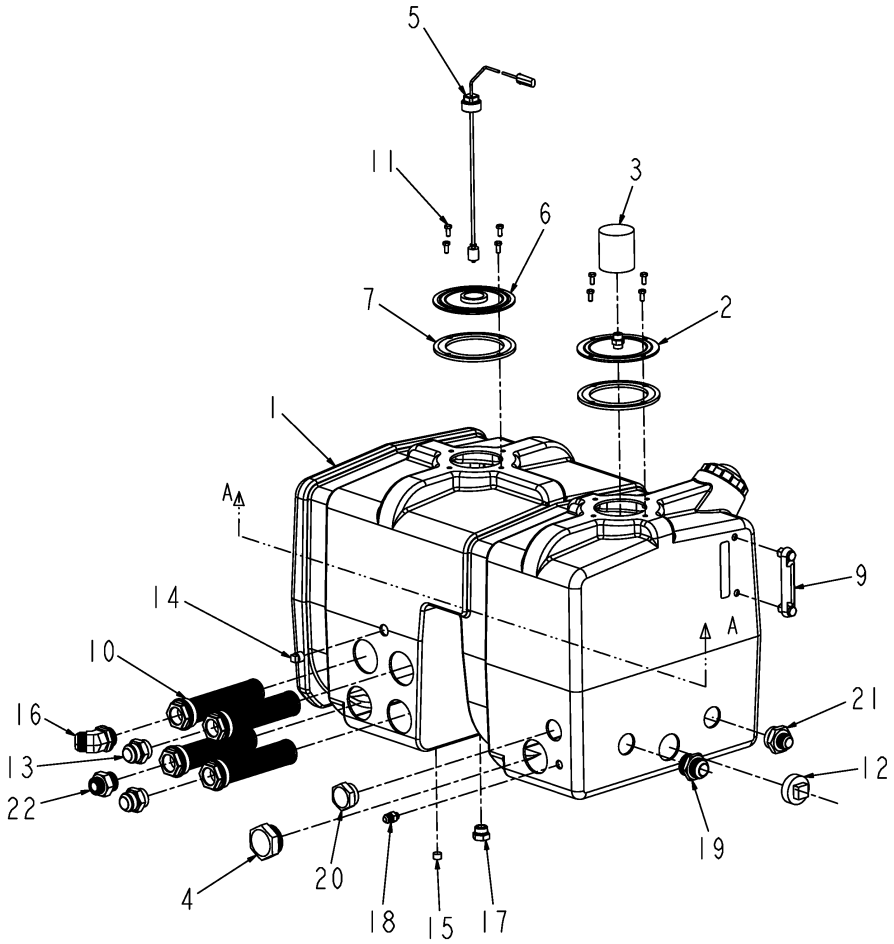

513483D1-02-N812-.tif

Copyright © 2007 AGCO Corporation

TANK ASM-HYD 60 GAL

ITEM	PART #	QTY	DESCRIPTION	COMMENTS
1	AG121582	1	RESERVOIR-HYD 60 GAL	SEE PAGE 7-17
2	AG121591	1	COVER,CLEAN OUT,W/BRTHR ADPTR	
3	AG121778	1	FILTER BREATHER,HYD. TANK	
4	AG121806	1	PLUG-2.00 MO-R HEX	
5	AG124723	1	SWITCH-LEVEL,HYDRAULIC	
6	AG124732	1	COVER,CLEANOUT,W1-1/4 NPT	
7	AG136400	2	GASKET-COVER,HYD TANK	
8	AG513916	AR	LOCTITE HYD SEALANT BROWN	
9	AG519570	1	INDICATOR HYD FLUID LEVEL	
10	AG520617	4	STRAINER-SUCTION 2.50	
11	AG550183	8	BOLT 0.31-18NCX 0.75 G5 ZN HHD	
12	AG550833	1	PLUG PIPE 2.00 SQ HD NPT	
13	AG552186	2	ADAP STR-20MBX-20MJ	[A]
14	AG557307	1	PLUG PIPE .50 SQ HD SOLID PL	
15	AG561081	1	PLUG PIPE .37 HEX S0C NPT STL	
16	AG561340	1	ELBOW -20MB45X-20MJ	
17	AG561879	1	PLUG 0.75MO-R HEX	[B]
18	AG562372	1	ADAP STR 0.37MO-R X 0.50MJIC	
19	AG562393	1	ADAP STR 1.50MO-R X 1.25MJIC	
20	AG562568	1	PLUG 1.50 MO-R HEX	
21	AG713265	1	ADAPTER STR	
22	401002X1	1	ADAP ASM-STR, -20MOR X -16ORFS	
	FOOTNOTE [A]		AG714806-O-RING	
	FOOTNOTE [B]		AG562511 O-RING	

Copyright © 2007 AGCO Corporation

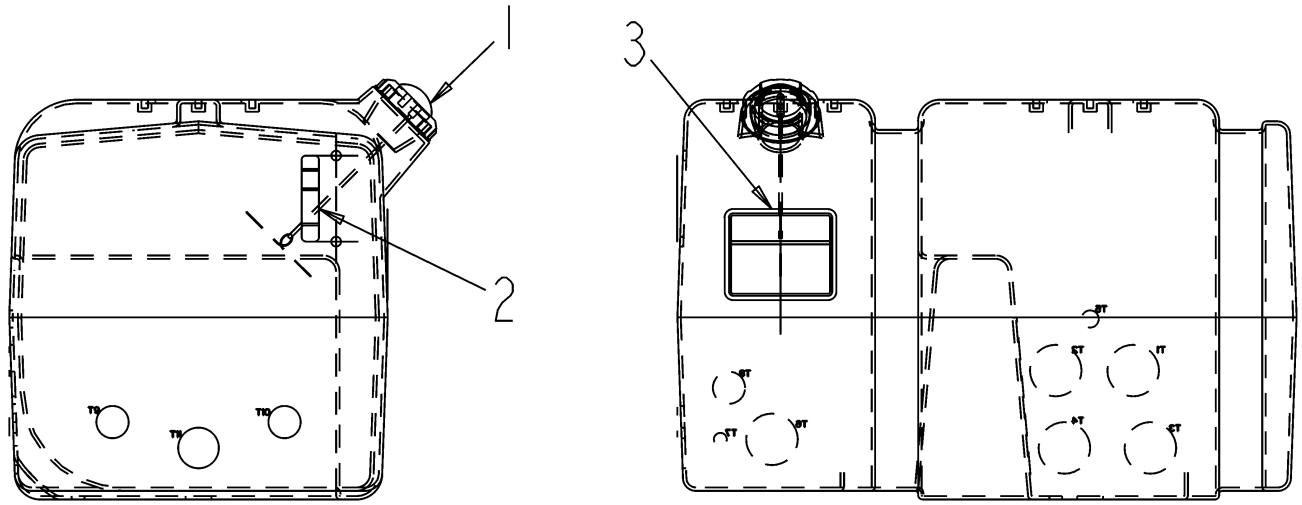

121582.TIF

Copyright © 2007 AGCO Corporation

RESERVOIR-HYD 60 GAL

ITEM	PART #	QTY	DESCRIPTION	COMMENTS
1	AG121768	1	CAP-HYDRAULIC W/LANYARD	
2	AG232541	-	DECAL HYD OIL LEVEL	[A]
3	AG263020	-	DECAL-HYDRAULIC OIL	
	FOOTNOTE [A]		SPANISH DECAL: AG237863	

Copyright © 2007 AGCO Corporation

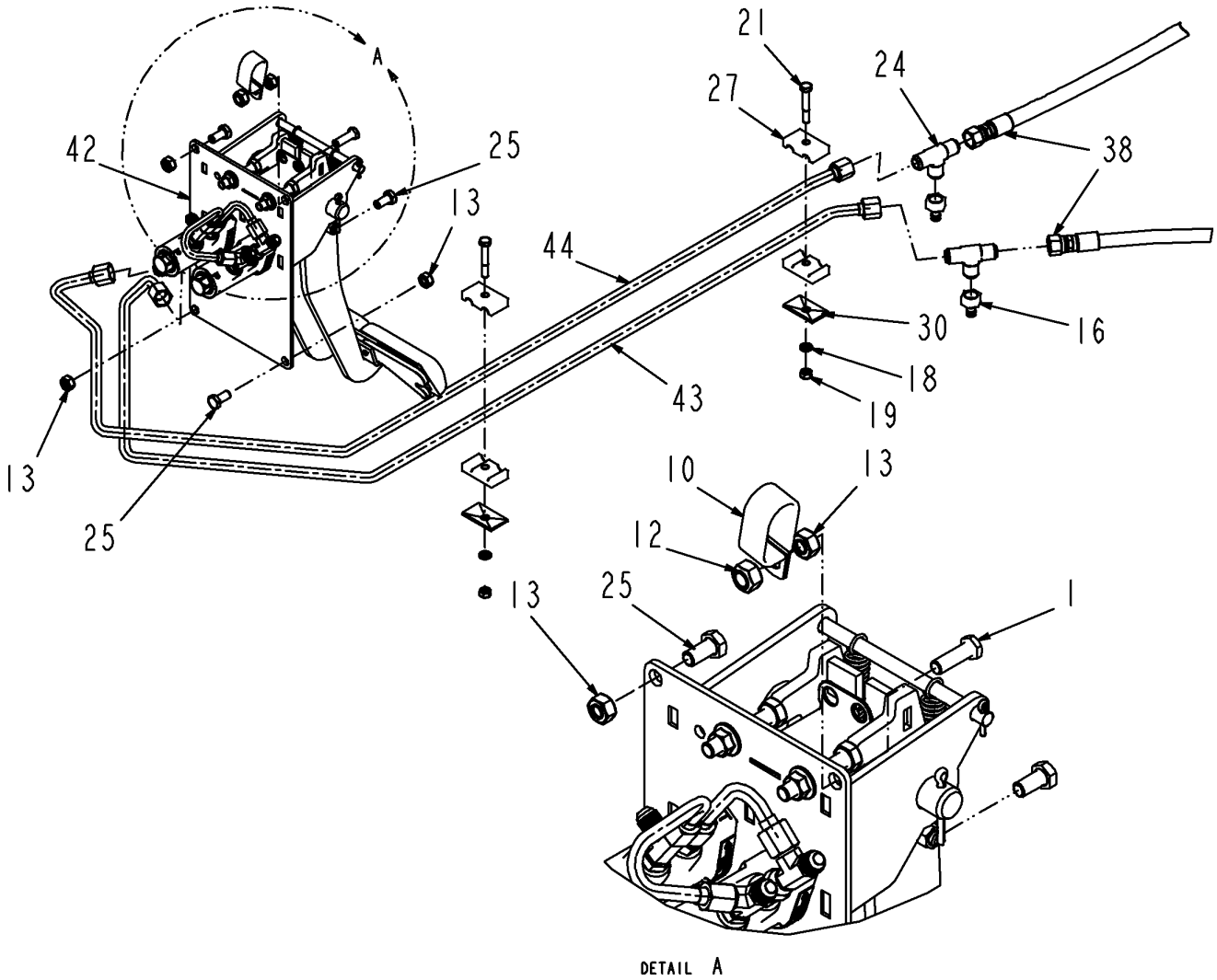

515750D1-02-R699-01.TIF

Copyright © 2007 AGCO Corporation

BRAKE INSTL-4660

ITEM	PART #	QTY	DESCRIPTION	COMMENTS
1	WR29125	1	SCREW-CAP HEX M10 X 30	
10	WR55248	1	CLAMP-SUPPORT CUSHION DBL	
12	WR55312	1	NUT-LOCK HEX,M10 X 1.5,	
13	WR55316	12	NUT-HEX,M10 X 1.5 W/THREADLOCK	
16	AG519115	2	TUBE END NIPPLE -8	
18	AG550205	4	WASHER 0.31 LK ZN REG	
19	AG550213	2	NUT 0.31-18NC HEX ZN REG	
21	AG552275	2	BOLT 0.31-18NCX 2.00 G5 ZN HHD	
24	AG562346	2	TEE -8MJ	
25	AG562463	5	BOLT M10-1.50X 20MM G8.8 ZN HH	
27	6577696	2	CLAMP-TUBELINE	
30	6652521	2	COVER-PLATE	
38	6802302	2	HOSE-8FJX-06FJX45-06R1	
42	515752D1	1	PEDAL ASSY-4X60 BRAKE	SEE PAGE 8-2
43	515769D1	1	TUBELINE ASM	
44	515770D1	1	TUBELINE ASM	

Copyright © 2007 AGCO Corporation

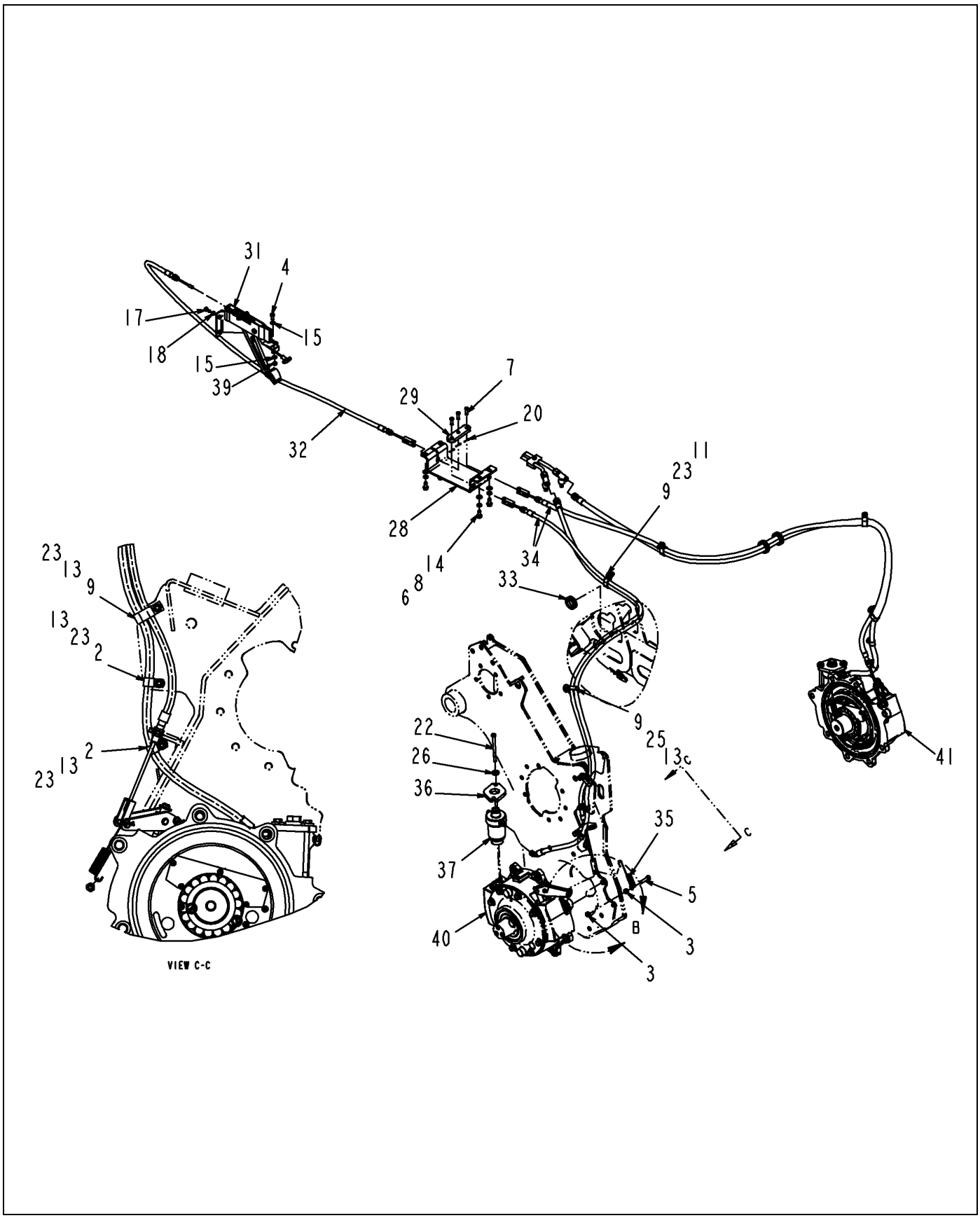

515750D1-02-R699-02.TIF

Copyright © 2007 AGCO Corporation

ITEM	PART #	QTY	DESCRIPTION	COMMENTS
2	WR50830	4	CLAMP-SUPPORT,CUSHION,	
3	WR50838	4	NUT-HEX,METRIC M10-1.5	
4	WR55035	1	SCREW-CAP HEX M8 X 20	
5	WR55047	2	SCREW-CAP HEX M10 X 40	
6	WR55075	4	WASHER-FL,M10,ZN,REG	
7	WR55098	3	PIN-CLEVIS,3/8 X 1.08 HRD	
8	WR55106	4	WASHER-LOCK SPRING,10 MM	
9	WR55247	6	CLAMP-SUPPORT CUSHION DBL	
11	WR55301	2	NUT-FLANGE,M10 X 1.5,PREV	
13	WR55316	12	NUT-HEX,M10 X 1.5 W/THREADLOCK	
14	WR55350	4	SCREW-HEX,3/8 X 1,	
15	WR55388	2	WASHER-PLAIN ST,8MM	
17	AG550183	2	BOLT 0.31-18NCX 0.75 G5 ZN HHD	
18	AG550205	4	WASHER 0.31 LK ZN REG	
20	AG552089	3	PIN COTTER 0.09X0.75 ZN	
22	AG553662	4	BOLT 0.37-16NCX 5.00 G5 ZN HHD	
23	AG561683	8	BOLT M10-1.5 X 25MM G8.8 ZN HH	
25	AG562463	5	BOLT M10-1.50X 20MM G8.8 ZN HH	
26	6565433	4	WASHER-ENGINE	
28	6626414	1	BRACKET-BRAKE	
29	6626527	1	BAR-EQUALIZER	
31	6661111	1	LEVER ASSY-BRAKE	
32	6661803	1	CABLE-BRAKE,PARKING	
33	6670119	4	GROMMET	
34	6670628	2	CABLE-BRAKE,PARKING	
35	6800216	2	TIGHTENER-SPRING	
36	6800718	2	MOUNT	
37	6800721	2	CYLINDER ASSY-BRAKE	SEE PAGE 3-13
39	400340X1	1	NUT-M8X1.25X13 HEX ZND1	
40	511017D1	1	BRAKE ASSY- 6 DISC LH	SEE PAGE 5-10
41	511018D1	1	BRAKE ASSY- 6 DISC RH	SEE PAGE 5-11

Copyright © 2007 AGCO Corporation

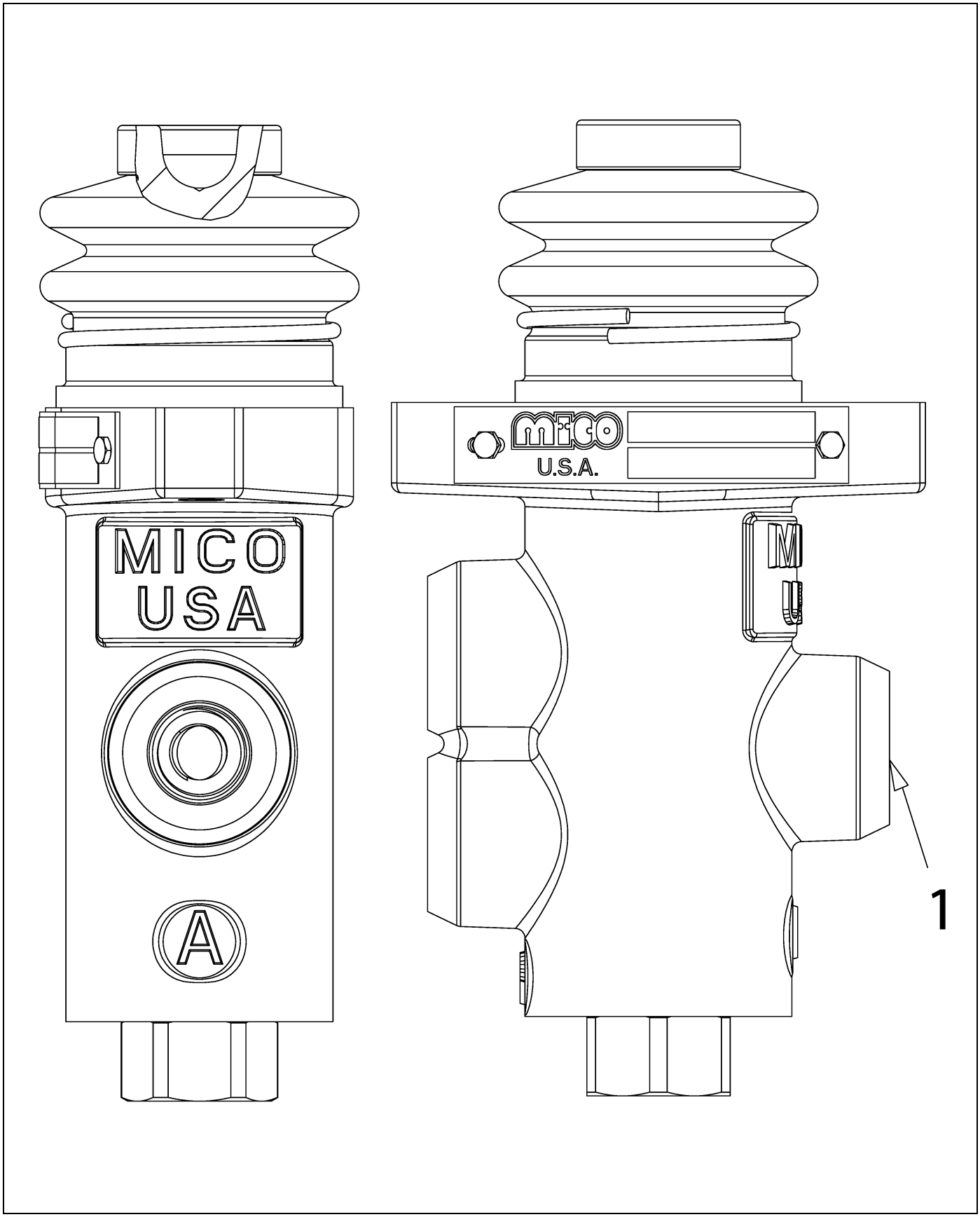

504925D1-01-M978.TIF

Copyright © 2007 AGCO Corporation

VALVE-BRAKE MODULATING,

ITEM	PART #	QTY	DESCRIPTION	COMMENTS
REF	511402D1	1	KIT- BRAKE VALVE REPAIR	

Copyright © 2007 AGCO Corporation

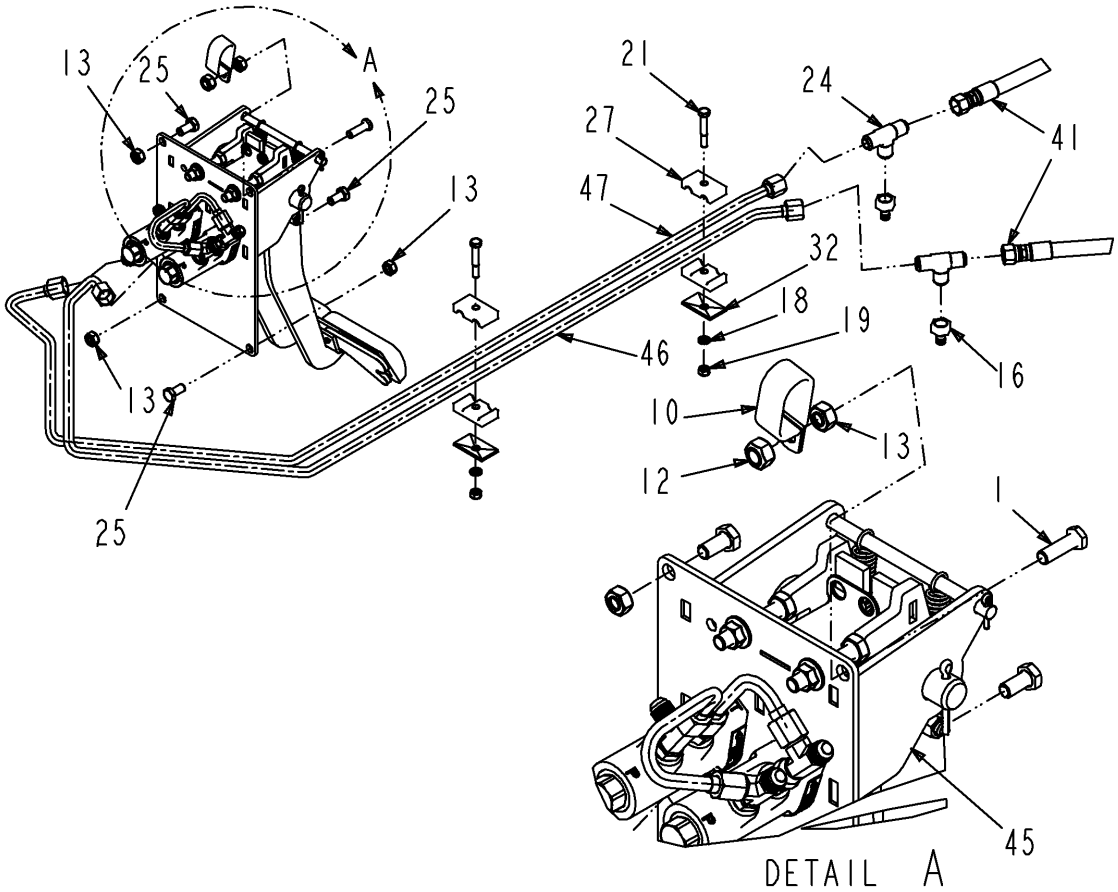

515751D1-02-R699-01.TIF

Copyright © 2007 AGCO Corporation

ITEM	PART #	QTY	DESCRIPTION	COMMENTS
1	WR29125	1	SCREW-CAP HEX M10 X 30	
10	WR55248	1	CLAMP-SUPPORT CUSHION DBL	
12	WR55312	1	NUT-LOCK HEX,M10 X 1.5,	
13	WR55316	12	NUT-HEX,M10 X 1.5 W/THREADLOCK	
16	AG519115	2	TUBE END NIPPLE -8	
18	AG550205	4	WASHER 0.31 LK ZN REG	
19	AG550213	2	NUT 0.31-18NC HEX ZN REG	
21	AG552275	2	BOLT 0.31-18NCX 2.00 G5 ZN HHD	
24	AG562346	2	TEE -8MJ	
25	AG562463	9	BOLT M10-1.50X 20MM G8.8 ZN HH	
27	6577696	2	CLAMP-TUBELINE	
32	6652521	2	COVER-PLATE	
41	6802302	2	HOSE-8FJX-06FJX45-06R1	
45	515752D1	1	PEDAL ASSY-4X60 BRAKE	SEE PAGE 8-2
46	515769D1	1	TUBELINE ASM	
47	515770D1	1	TUBELINE ASM	

Copyright © 2007 AGCO Corporation

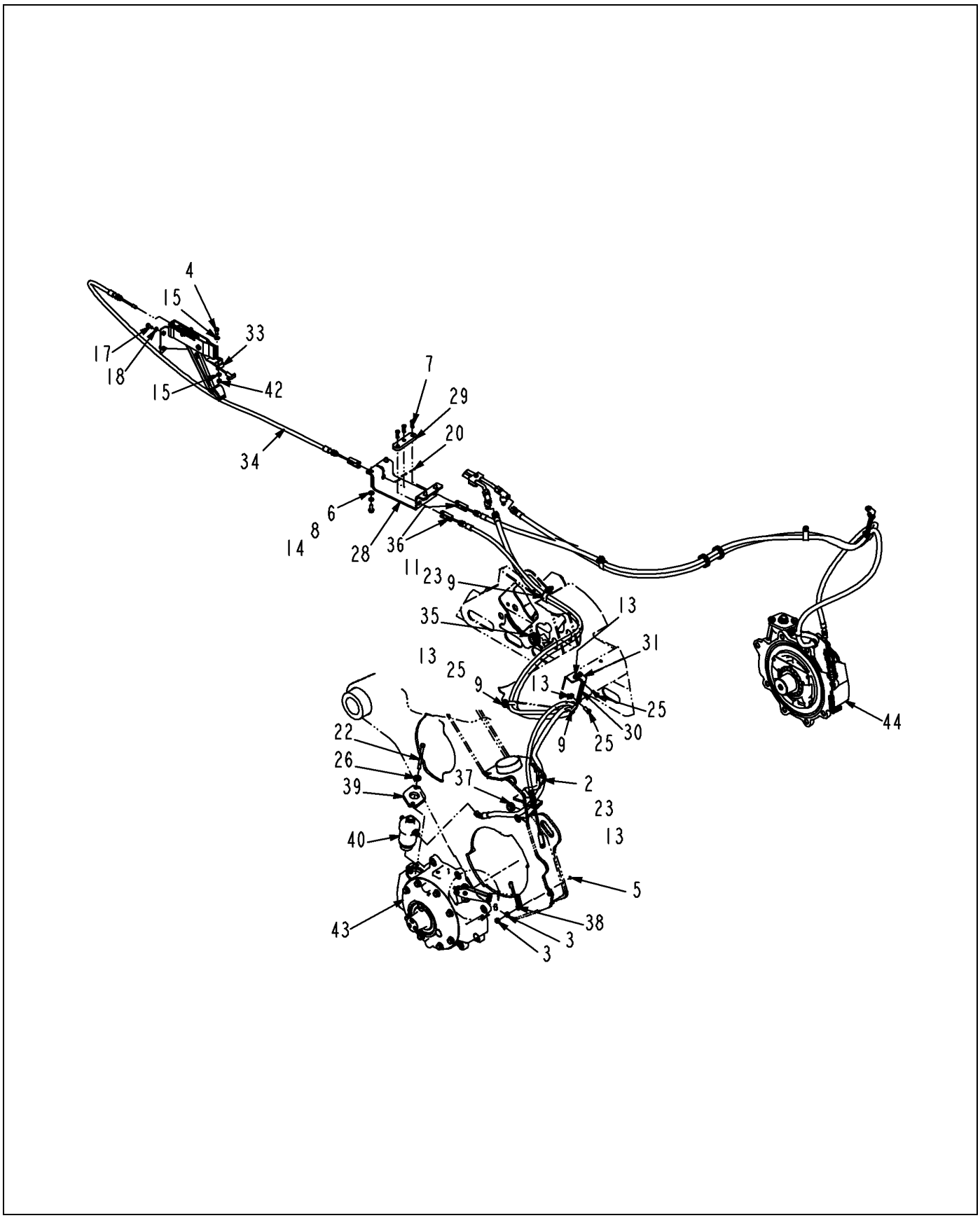

515751D1-02-R699-02.TIF

Copyright © 2007 AGCO Corporation

ITEM	PART #	QTY	DESCRIPTION	COMMENTS
2	WR50830	2	CLAMP-SUPPORT,CUSHION,	
3	WR50838	4	NUT-HEX,METRIC M10-1.5	
4	WR55035	1	SCREW-CAP HEX M8 X 20	
5	WR55047	2	SCREW-CAP HEX M10 X 40	
6	WR55075	4	WASHER-FL,M10,ZN,REG	
7	WR55098	3	PIN-CLEVIS,3/8 X 1.08 HRD	
8	WR55106	4	WASHER-LOCK SPRING,10 MM	
9	WR55247	6	CLAMP-SUPPORT CUSHION DBL	
11	WR55301	2	NUT-FLANGE,M10 X 1.5,PREV	
13	WR55316	12	NUT-HEX,M10 X 1.5 W/THREADLOCK	
14	WR55350	4	SCREW-HEX,3/8 X 1,	
15	WR55388	2	WASHER-PLAIN ST,8MM	
17	AG550183	2	BOLT 0.31-18NCX 0.75 G5 ZN HHD	
18	AG550205	4	WASHER 0.31 LK ZN REG	
20	AG552089	3	PIN COTTER 0.09X0.75 ZN	
22	AG553662	4	BOLT 0.37-16NCX 5.00 G5 ZN HHD	
23	AG561683	4	BOLT M10-1.5 X 25MM G8.8 ZN HH	
25	AG562463	9	BOLT M10-1.50X 20MM G8.8 ZN HH	
26	6565433	4	WASHER-ENGINE	
28	6626414	1	BRACKET-BRAKE	
29	6626527	1	BAR-EQUALIZER	
30	6627405	2	SPRING-EXTENSION	
31	6627406	2	BRACKET	
33	6661111	1	LEVER ASSY-BRAKE	
34	6661803	1	CABLE-BRAKE,PARKING	
35	6670119	4	GROMMET	
36	6670628	2	CABLE-BRAKE,PARKING	
37	6670751	2	GROMMET	
38	6800216	2	TIGHTENER-SPRING	
39	6800718	2	MOUNT	
40	6800721	2	CYLINDER ASSY-BRAKE	SEE PAGE 3-13
42	400340X1	1	NUT-M8X1.25X13 HEX ZND1	
43	511017D1	1	BRAKE ASSY- 6 DISC LH	SEE PAGE 5-10
44	511018D1	1	BRAKE ASSY- 6 DISC RH	SEE PAGE 5-11

Copyright © 2007 AGCO Corporation

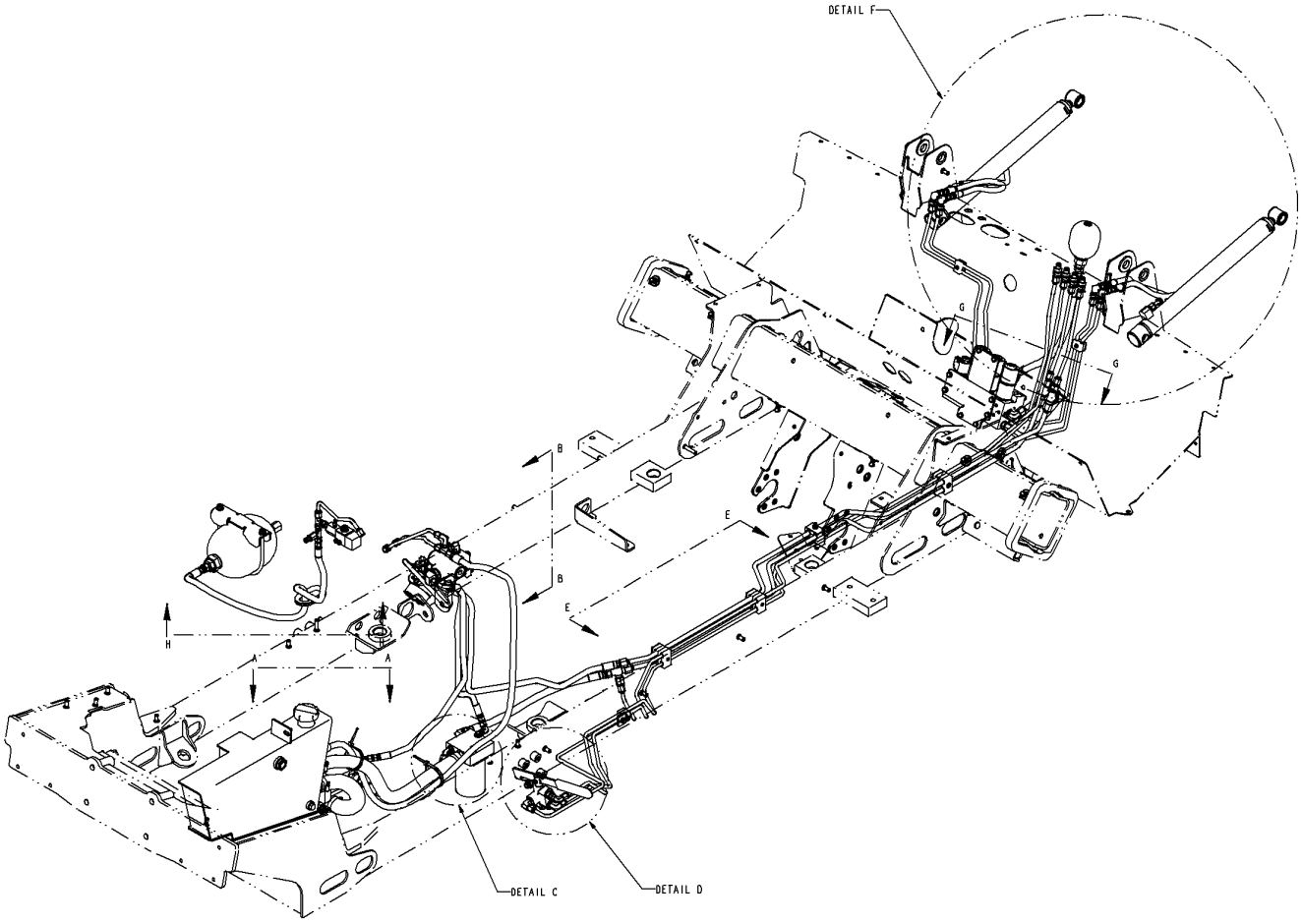

515762D1-01-R423-01.TIF

Copyright © 2007 AGCO Corporation

ITEM	PART #	QTY	DESCRIPTION	COMMENTS
80	516943D1	1	HYD TANK ASSEMBLY	SEE PAGE 7-59

Copyright © 2007 AGCO Corporation

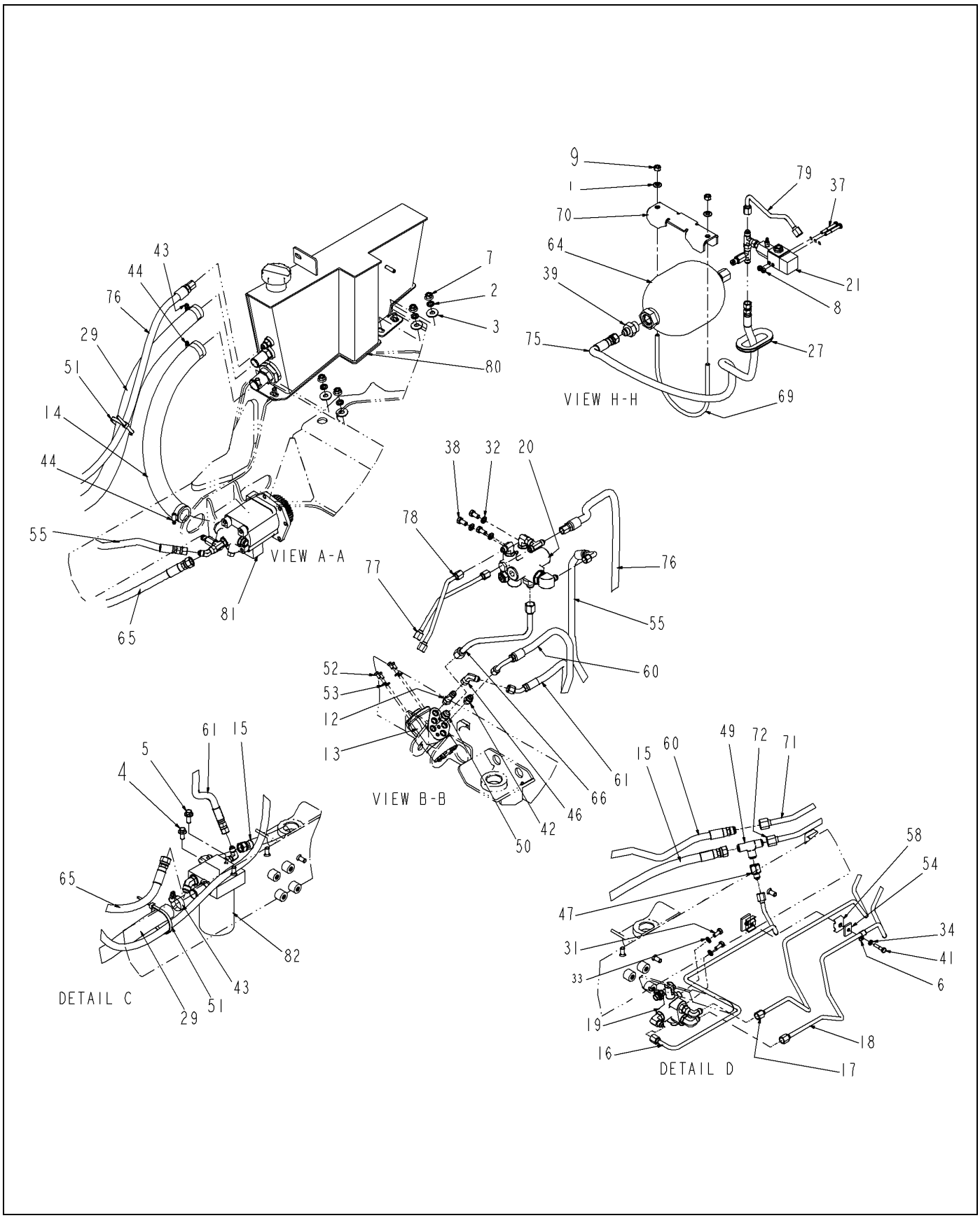

515762D1-01-R423-02.TIF

Copyright © 2007 AGCO Corporation

ITEM	PART #	QTY	DESCRIPTION	COMMENTS
1	WR55075	2	WASHER-FL,M10,ZN,REG	
2	WR55106	4	WASHER-LOCK SPRING,10 MM	
3	WR55158	4	WASHER-FLAT,10MM ID,	
4	WR55214	1	SCREW-HEX FLG,M10X1.5X20 CL8.8	
5	WR55215	1	SCREW-HEX FLG,M10X1.5X25 CL8.8	
6	WR55226	1	CLAMP-SUPPORT CUSHION,	
7	WR55301	4	NUT-FLANGE,M10 X 1.5,PREV	
8	WR55351	2	NUT-TOPLOCK, 1/4-20UNC G8	
9	WR55353	2	NUT-TOPLOCK, 3/8-16UNC G8	
12	AG122830	1	ADAP STR .37MORX.37MJIC LONG	
13	WR122985	-	VALVE, STEERING CONTROL	
14	WR128669	-	HOSE HYD -20 BULK R4 [BULK: 44.417 FT]	
15	WR129737	1	HOSE ASSY-8X25.7,08FJS/08FJS	
16	WR129751	1	ASM-TUBELINE,HYD,SPRA COUPE	
17	WR129752	1	ASM-TUBELINE,HYD,SPRA COUPE	
18	WR129753	1	ASM-TUBELINE,HYD,SPRA COUPE	
19	AG134293	1	ASM VALVE-2 POSTION, FLOAT	SEE PAGE 7-27
20	AG134517	1	ASM-VALVE CHARGE	SEE PAGE 7-52
21	AG134519	1	ASM-SWITCH PRESSURE	SEE PAGE 7-53
27	AG513654	-	EDGE LINER .19 IN TK MAT PVC [BULK: 19.084 FT]	
29	AG518933	-	HOSE HYD -16 BULK R4 * [BULK: 65.584 FT]	
31	AG550183	6	BOLT 0.31-18NCX 0.75 G5 ZN HHD	
32	AG550191	3	WASHER 0.37 LK ZN REG	
33	AG550205	5	WASHER 0.31 LK ZN REG	
34	AG550493	3	WASHER 0.25 LK ZN REG	
37	AG551279	2	BOLT 0.25-20NCX 2.00 G5 ZN HHD	
38	AG551503	3	BOLT 0.37-16NCX 0.75 G5 ZN HHD	
39	AG552194	1	ADAP STR 0.75MO-R X 0.50MJIC	
41	AG558788	3	BOLT 0.25-20NCX 1.25 G5 ZN HHD	
42	AG560693	1	ADAP STR 0.37MO-R X 0.37MJIC	
43	AG561213	2	CLAMP 0.81-1.50 HOSE 16HS	
44	AG561230	2	CLAMP 0.81-1.75 HOSE 20HS	
46	AG561629	1	ELBOW -6FJS90X -6MJ	
47	AG561834	3	ADAP STR-8FJX-6MJ	
49	AG562346	3	TEE -8MJ	
50	AG562372	1	ADAP STR 0.37MO-R X 0.50MJIC	
51	AG562496	AR	TIE CABLE 15.0 .18-4.00 BLACK	
52	AG562639	4	BOLT M6 1.00X12MM G8.8 ZN HHD	
53	AG562792	4	WASHER LOCK M6 SPRING ZN	
54	6535422	3	WASHER-CLAMP	
55	6536129	1	HOSE-06FJX-06FJX90-06R1	
58	6578870	3	CLAMP-TUBELINE	
60	6626697	1	HOSE-08MJ-06FJX90-06R1	
61	6627634	1	HOSE-06FJX-06FJX45-06R1	
64	6670147	1	ACCUMULATOR	
65	6800357	1	HOSE-08FJX(2)-08R1 X017.7	
66	6801007	1	TUBELINE	
69	6801751	1	U BOLT	
70	6801752	1	BRACKET-CLAMP	
71	6801843	1	TUBELINE	

Copyright © 2007 AGCO Corporation

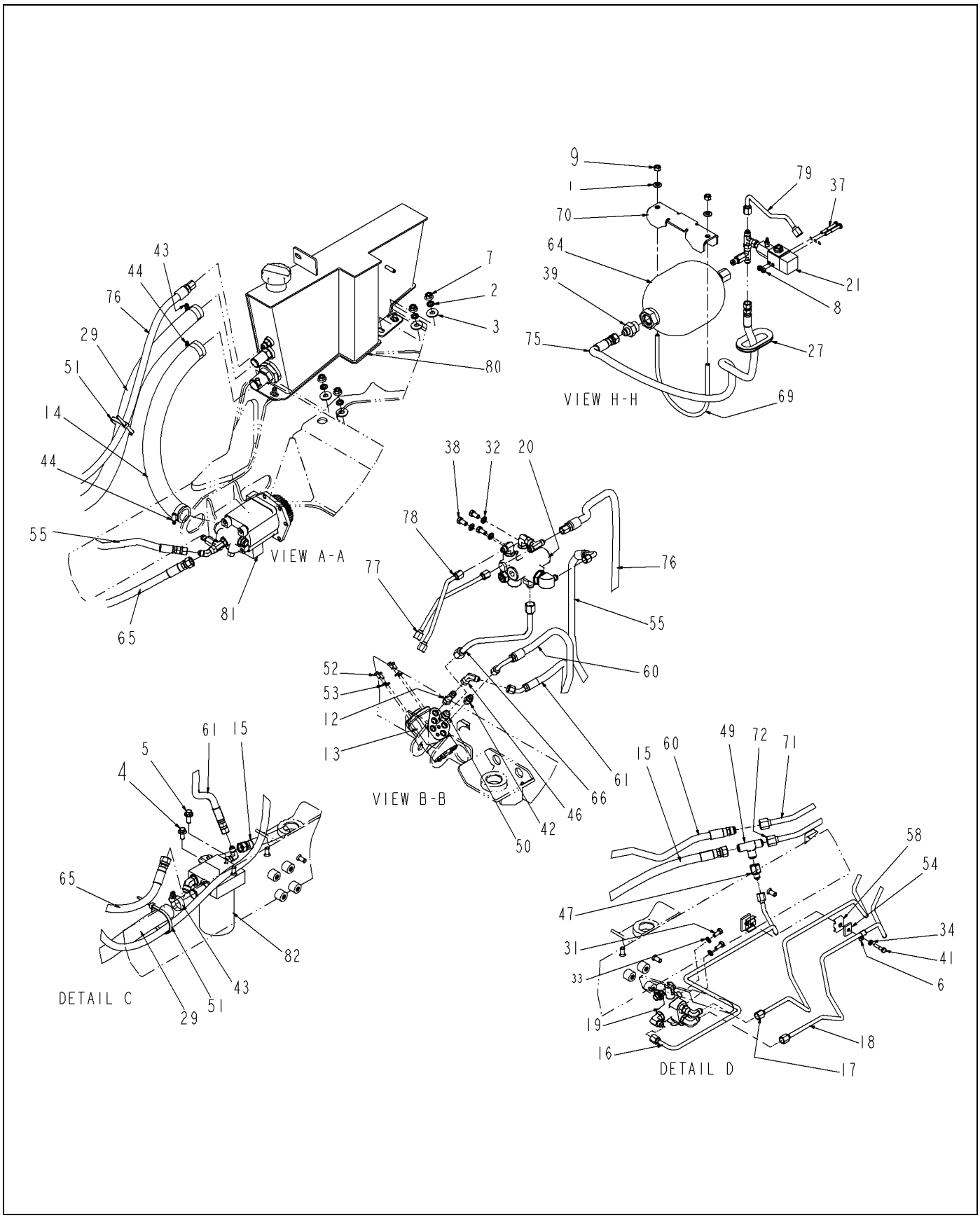

515762D1-01-R423-02.TIF

Copyright © 2007 AGCO Corporation

ITEM	PART #	QTY	DESCRIPTION	COMMENTS
72	6801844	1	TUBELINE	
75	6802465	1	HOSE-08FJX-06FJX-06R1	
76	6802800	1	HOSE-06FJX(2)-06R1 X073	
77	515771D1	1	TUBELINE ASSEMBLY	
78	515772D1	1	TUBELINE ASSEMBLY	
79	515774D1	1	TUBELINE ASSEMBLY	
81	517544D1	1	PUMP ASM-HYD	SEE PAGE 7-30
82	517545D1	1	FILTER ASM-HYD	SEE PAGE 7-55

Copyright © 2007 AGCO Corporation

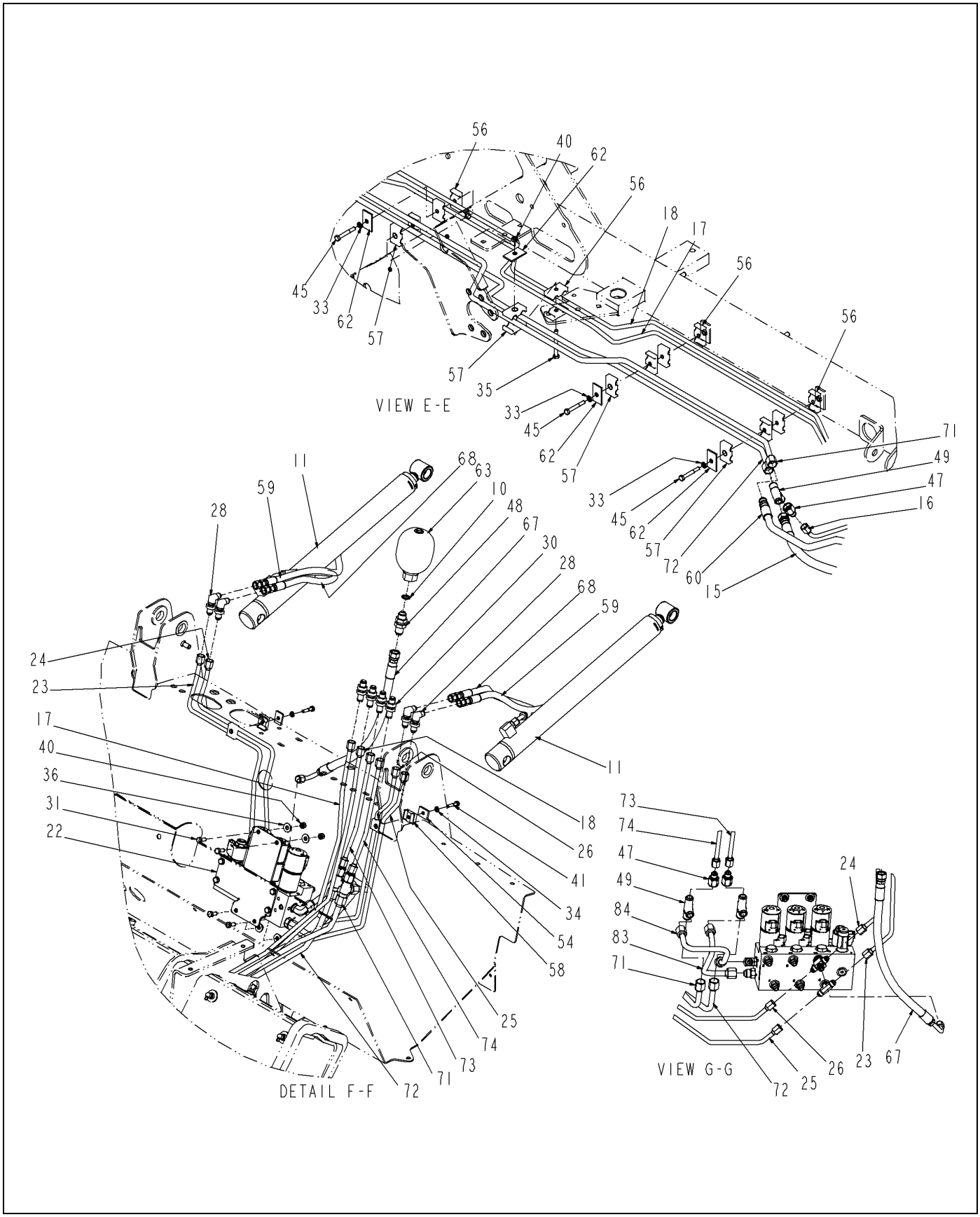

515762D1-01-R423-03.TIF

Copyright © 2007 AGCO Corporation

ITEM	PART #	QTY	DESCRIPTION	COMMENTS
10	WR55454	1	O RING-08MB,90 DUR	
11	WR122424	2	CYLINDER-HYD,1.75X16.84X1.00	[A] SEE PAGE 7-51
15	WR129737	1	HOSE ASSY-8X25.7,08FJS/08FJS	
16	WR129751	1	ASM-TUBELINE,HYD,SPRA COUPE	
17	WR129752	1	ASM-TUBELINE,HYD,SPRA COUPE	
18	WR129753	1	ASM-TUBELINE,HYD,SPRA COUPE	
22	AG134520	1	ASM VALVE-HYD,4000,CHASSIS	SEE PAGE 7-54
23	WR134521	1	TUBE ASM-LOWER,RH,4000	
24	WR134522	1	TUBE ASM-RAISE,RH,4000	
25	WR134523	1	TUBE ASM-LOWER,LH,4000	
26	WR134524	1	TUBE ASM-RAISE,LH,4000	
28	AG514803	4	ELBOW 90D 0.37JICX0.37JIC BHD	
30	AG521798	4	UNION-BHD,.38MJIC	
31	AG550183	6	BOLT 0.31-18NCX 0.75 G5 ZN HHD	
33	AG550205	5	WASHER 0.31 LK ZN REG	
34	AG550493	3	WASHER 0.25 LK ZN REG	
35	AG550906	1	BOLT 0.31-18NCX 3.00 G5 ZN HHD	
36	AG551015	4	WASHER 0.31 FL ZN REG TYPE-B	
40	AG557668	5	NUT 0.31-18NC HEX ZN C-LK	
41	AG558788	3	BOLT 0.25-20NCX 1.25 G5 ZN HHD	
45	AG561251	3	BOLT 0.31-18NCX 2.25 G5 ZN HHD	
47	AG561834	3	ADAP STR-8FJX-6MJ	
48	AG562229	1	ADAP STR-8MJBHX-8MJ	
49	AG562346	3	TEE -8MJ	
54	6535422	3	WASHER-CLAMP	
56	6577696	4	CLAMP-TUBELINE	
57	6577697	4	CLAMP-TUBLINE	
58	6578870	3	CLAMP-TUBELINE	
59	6618197	2	HOSE-06FJX(20-04R2 X028.4	
60	6626697	1	HOSE-08MJ-06FJX90-06R1	
62	6652521	4	COVER-PLATE	
63	6669671	1	ACCUMULATOR	
67	6801342	1	HOSE-08FJX-06FJX90-06R1	
68	6801683	2	HOSE-06FJX-06FX90-04R2	
71	6801843	1	TUBELINE	
72	6801844	1	TUBELINE	
73	6801935	1	TUBELINE	
74	6801936	1	TUBELINE	
83	WR37374	1	TUBE ASSY-TANK,4000	
84	WR37375	1	TUBE ASSY-PUMP,4000	
	FOOTNOTE [A]		ITEMS 7 - 14 CANNOT BE PURCHASED INDIVIDUALLY BUT ARE INCLUDED IN THE SEAL KIT.	

Copyright © 2007 AGCO Corporation

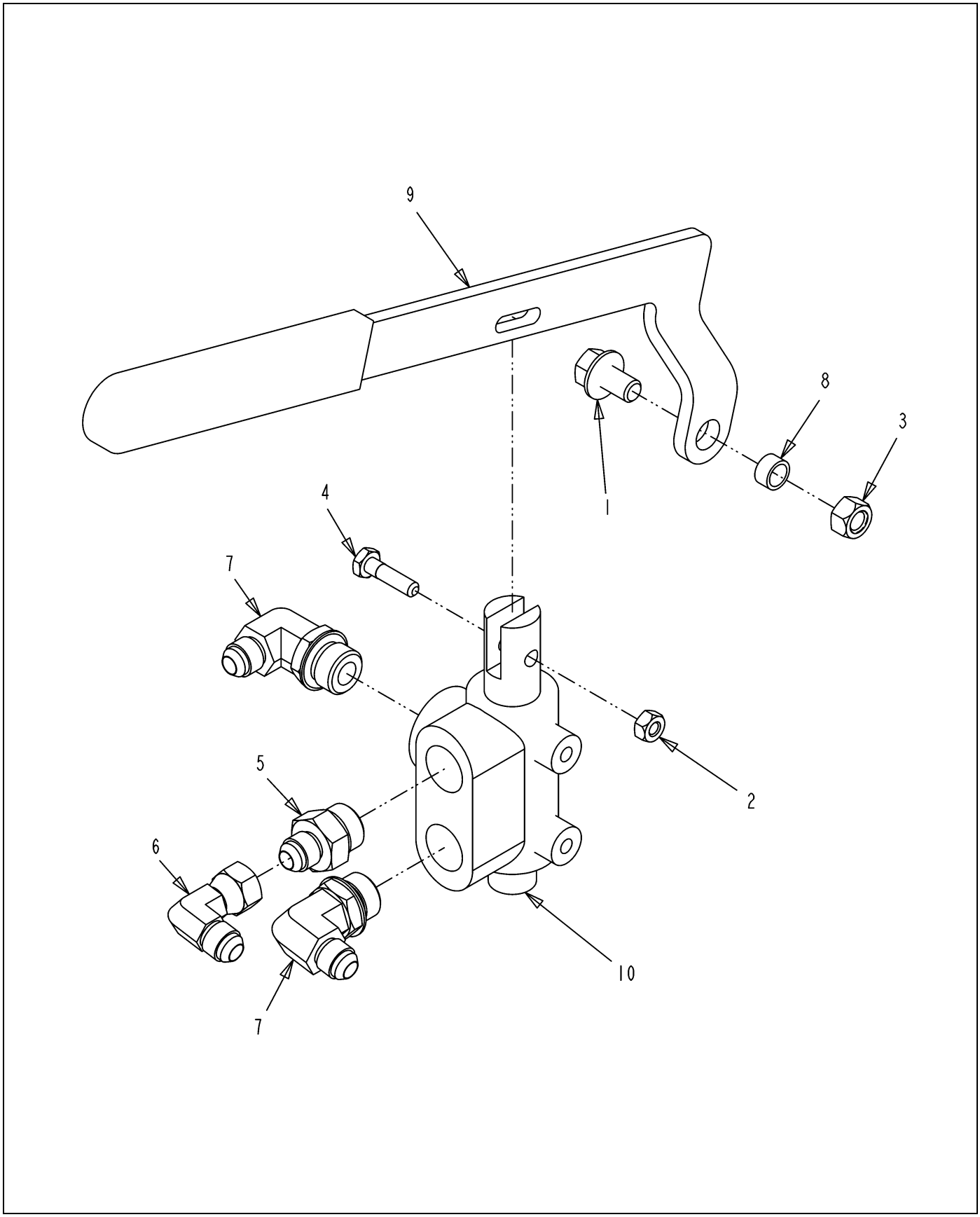

134293-B.TIF

Copyright © 2007 AGCO Corporation

ASM VALVE-2 POSTION, FLOAT

ITEM	PART #	QTY	DESCRIPTION	COMMENTS
1	WR10254	1	SCREW-WZLK FLG 3/8 NC X 1	
2	WR55365	1	NUT-TOPLOCK, 1/4-20UNC,	
3	WR55366	1	NUT-TOPLOCK, 3/8-16UNC,	
4	AG550698	1	BOLT 0.25-20NCX 1.00 G5 ZN HHD	
5	AG561308	1	ADAP STR 0.50MO-R X 0.37MJIC	
6	AG561629	1	ELBOW -6FJS90X -6MJ	
7	AG562204	2	ELBOW-8MB90X-6MJ	[A]
8	6562619	1	BUSHING-THROTTLE	
9	6597879	1	GRIP ASSY-HANDLE	SEE PAGE 7-28
10	6664973	1	VALVE-FLOAT,2 POSITION	[B] SEE PAGE 7-29
	FOOTNOTE [A]		AG713670 O-RING	
	FOOTNOTE [B]		ITEM 5 & 8 CANNOT BE PURCHASED INDIVIDUALLY BUT ARE INCLUDED IN THE VALVE.	

Copyright © 2007 AGCO Corporation

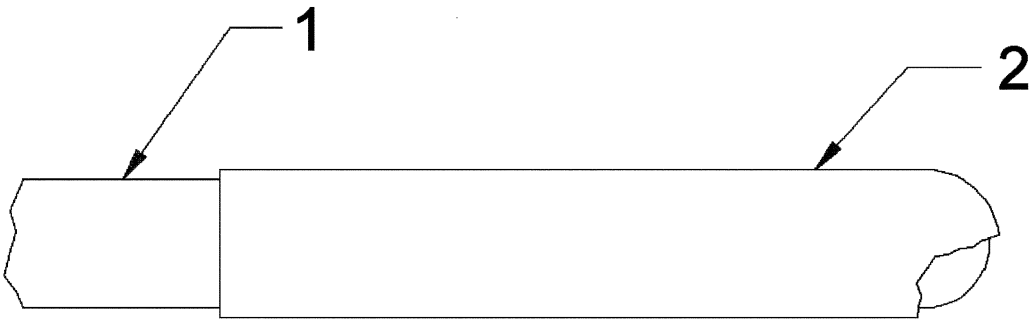

6597879.TIF

Copyright © 2007 AGCO Corporation

GRIP ASSY-HANDLE

ITEM	PART #	QTY	DESCRIPTION	COMMENTS
1	6597025	1	HANDLE-VALVE	
2	6597026	1	HANDLE-GRIP	

Copyright © 2007 AGCO Corporation

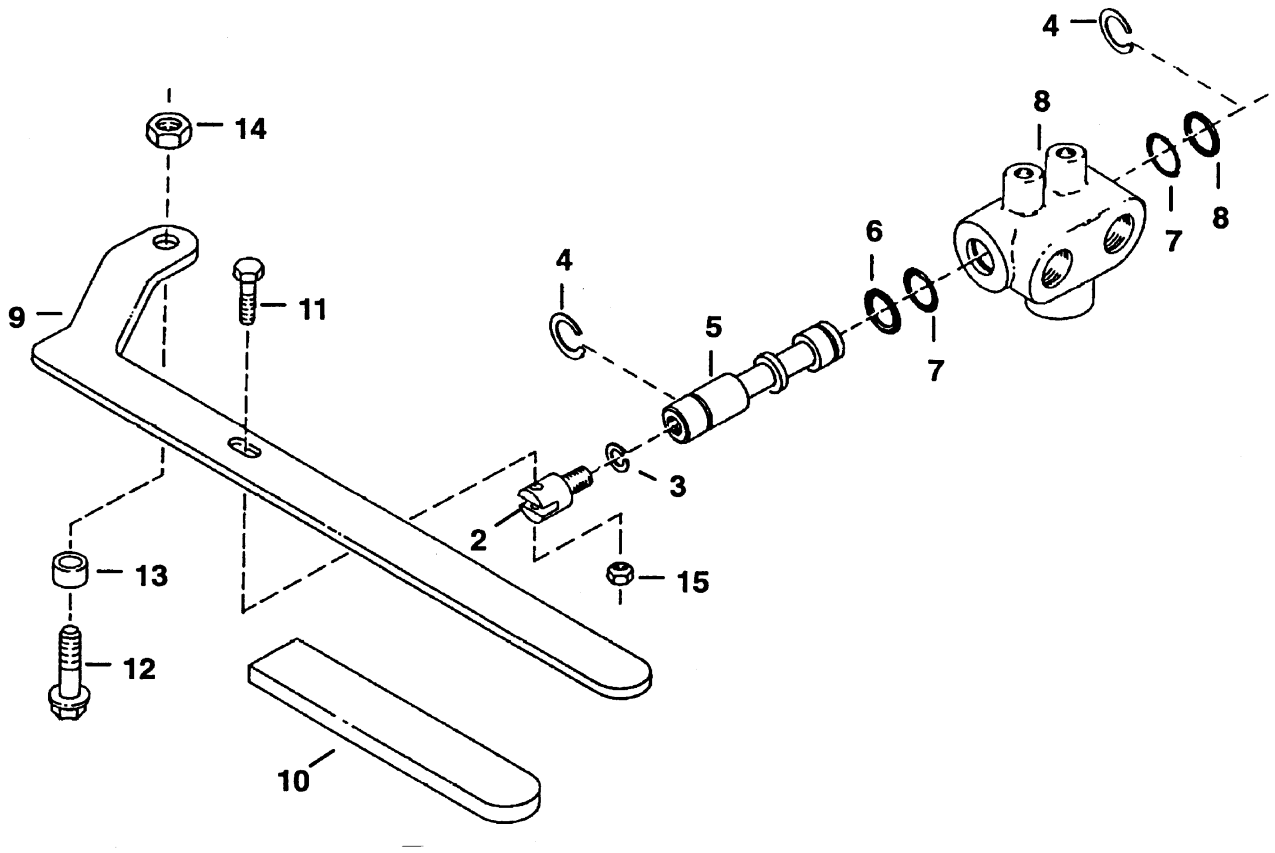

6664973.TIF

Copyright © 2007 AGCO Corporation

ITEM	PART #	QTY	DESCRIPTION	COMMENTS
2	6656070	1	CLEVIS	
3	6656069	1	WASHER	
4	6656067	2	RING	
6	NS	-	NON-SERVICEABLE PART	
7	NS	-	NON-SERVICEABLE PART	
9	6597025	1	HANDLE-VALVE	
10	6597026	1	HANDLE-GRIP	
11	NS	-	NON-SERVICEABLE PART	
12	NS	-	NON-SERVICEABLE PART	
13	6562619	1	BUSHING-THROTTLE	
14	WR55353	1	NUT-TOPLOCK, 3/8-16UNC G8	
15	WR55365	1	NUT-TOPLOCK, 1/4-20UNC,	
	FOOTNOTE		ITEM 5 & 8 CANNOT BE PURCHASED INDIVIDUALLY BUT ARE INCLUDED IN THE VALVE.	

Copyright © 2007 AGCO Corporation

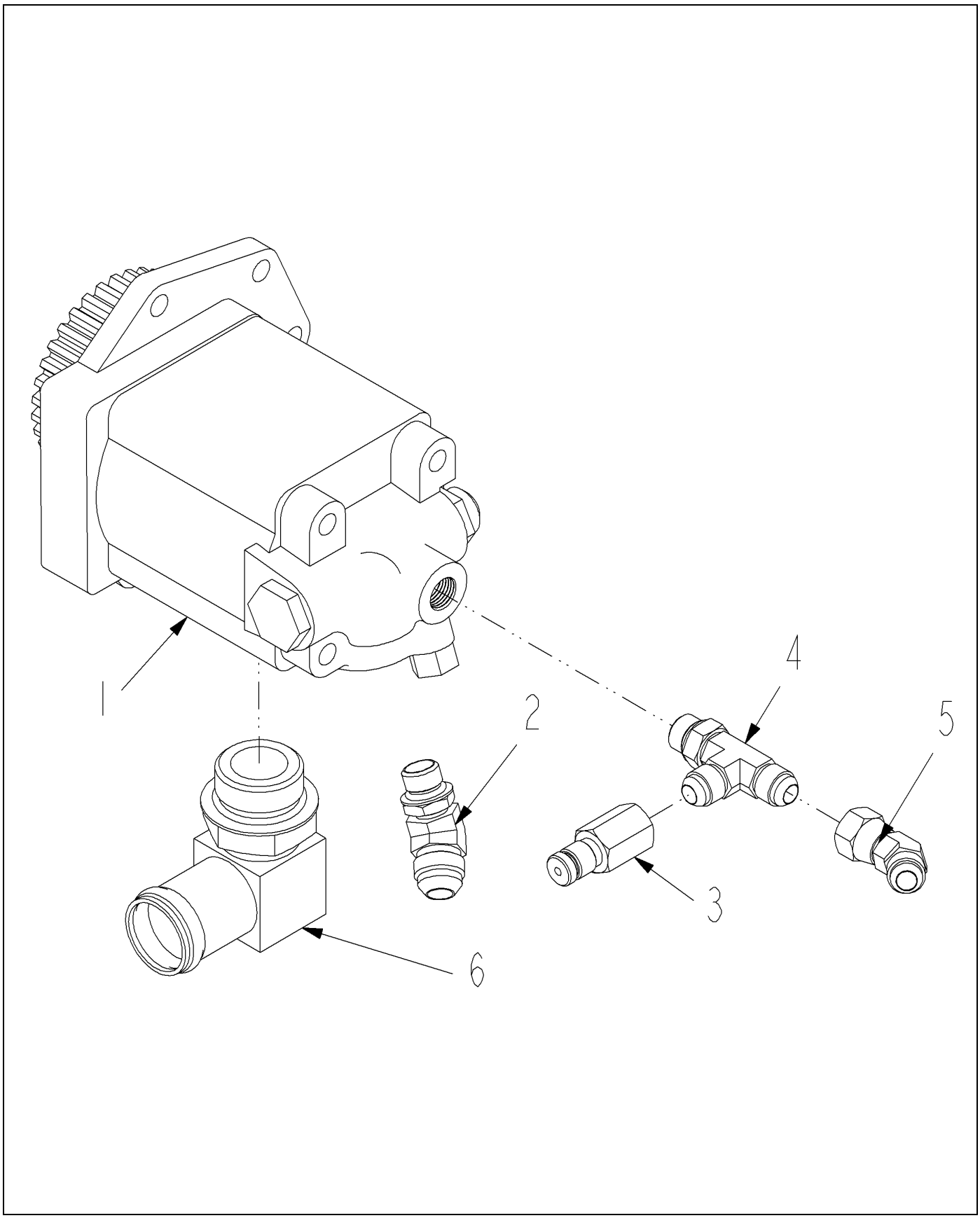

517544D1-01-R423-.TIF

Copyright © 2007 AGCO Corporation

PUMP ASM-HYD

ITEM	PART #	QTY	DESCRIPTION	COMMENTS
1	WR123121	1	PUMP HYDRAULIC	SEE PAGE 7-31
2	AG128112	1	ELBOW-8MJIC 45 X -6MB	
3	AG519114	1	TUBE END NIPPLE -6	
4	AG519123	1	TEE-RUN,STR THD -6	[A]
5	AG523227	1	ADAPTER-45D,-6FJIC SWX-6MJIC	
6	1312337	1	ADAPTER	
	FOOTNOTE [A]		AG713166 O-RING	

Copyright © 2007 AGCO Corporation

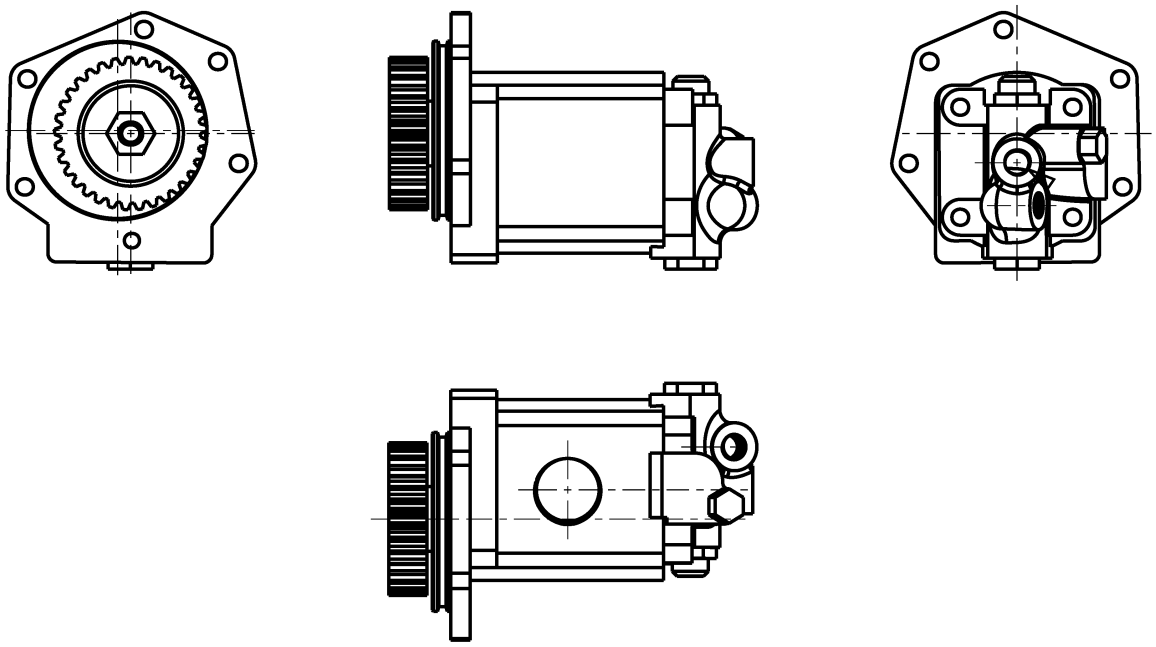

123121-B.TIF

Copyright © 2007 AGCO Corporation

ITEM	PART #	QTY	DESCRIPTION	COMMENTS
REF	4222433M1	1	JOINT	
REF	4222433M1	1	JOINT	

Copyright © 2007 AGCO Corporation

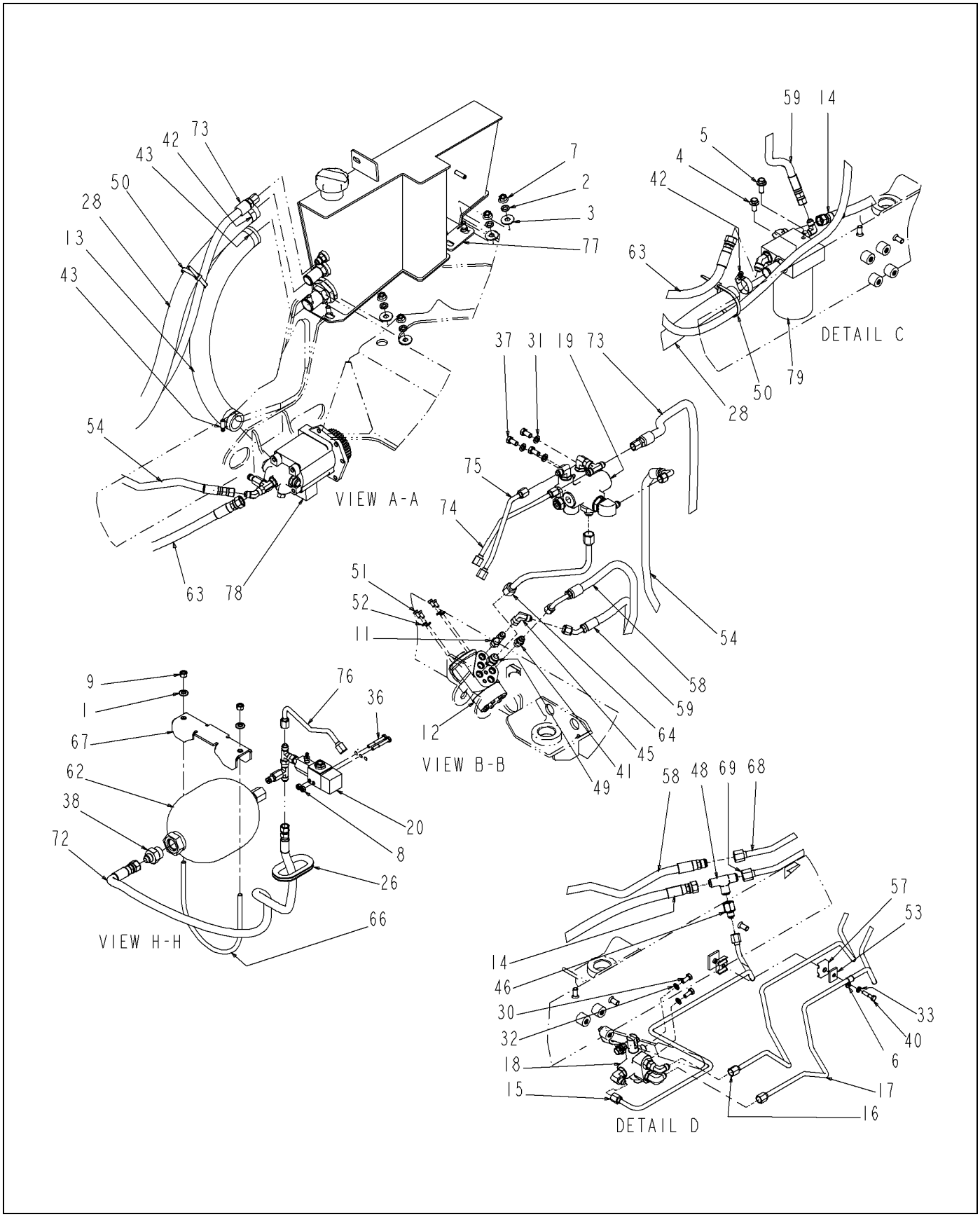

515763D1-01-R423-02.TIF

Copyright © 2007 AGCO Corporation

ITEM	PART #	QTY	DESCRIPTION	COMMENTS
1	WR55075	2	WASHER-FL,M10,ZN,REG	
2	WR55106	4	WASHER-LOCK SPRING,10 MM	
3	WR55158	4	WASHER-FLAT,10MM ID,	
4	WR55214	1	SCREW-HEX FLG,M10X1.5X20 CL8.8	
5	WR55215	1	SCREW-HEX FLG,M10X1.5X25 CL8.8	
6	WR55226	1	CLAMP-SUPPORT CUSHION,	
7	WR55301	4	NUT-FLANGE,M10 X 1.5,PREV	
8	WR55351	2	NUT-TOPLOCK, 1/4-20UNC G8	
9	WR55353	2	NUT-TOPLOCK, 3/8-16UNC G8	
11	AG122830	1	ADAP STR .37MORX.37MJIC LONG	
12	WR122985	-	VALVE, STEERING CONTROL	
13	WR128669	-	HOSE HYD -20 BULK R4 [BULK: 44.417 FT]	
14	WR129737	1	HOSE ASSY-8X25.7,08FJS/08FJS	
15	WR129751	1	ASM-TUBELINE,HYD,SPRA COUPE	
16	WR129752	1	ASM-TUBELINE,HYD,SPRA COUPE	
17	WR129753	1	ASM-TUBELINE,HYD,SPRA COUPE	
18	AG134293	1	ASM VALVE-2 POSTION, FLOAT	SEE PAGE 7-27
19	AG134517	1	ASM-VALVE CHARGE	SEE PAGE 7-52
20	AG134519	1	ASM-SWITCH PRESSURE	SEE PAGE 7-53
26	AG513654	-	EDGE LINER .19 IN TK MAT PVC [BULK: 19.084 FT]	
28	AG518933	-	HOSE HYD -16 BULK R4 * [BULK: 65.584 FT]	
30	AG550183	6	BOLT 0.31-18NCX 0.75 G5 ZN HHD	
31	AG550191	3	WASHER 0.37 LK ZN REG	
32	AG550205	5	WASHER 0.31 LK ZN REG	
33	AG550493	3	WASHER 0.25 LK ZN REG	
36	AG551279	2	BOLT 0.25-20NCX 2.00 G5 ZN HHD	
37	AG551503	3	BOLT 0.37-16NCX 0.75 G5 ZN HHD	
38	AG552194	1	ADAP STR 0.75MO-R X 0.50MJIC	
40	AG558788	3	BOLT 0.25-20NCX 1.25 G5 ZN HHD	
41	AG560693	1	ADAP STR 0.37MO-R X 0.37MJIC	
42	AG561213	2	CLAMP 0.81-1.50 HOSE 16HS	
43	AG561230	2	CLAMP 0.81-1.75 HOSE 20HS	
45	AG561629	1	ELBOW -6FJS90X -6MJ	
46	AG561834	3	ADAP STR-8FJX-6MJ	
48	AG562346	3	TEE -8MJ	
49	AG562372	1	ADAP STR 0.37MO-R X 0.50MJIC	
50	AG562496	AR	TIE CABLE 15.0 .18-4.00 BLACK	
51	AG562639	4	BOLT M6 1.00X12MM G8.8 ZN HHD	
52	AG562792	4	WASHER LOCK M6 SPRING ZN	
53	6535422	3	WASHER-CLAMP	
54	6536129	1	HOSE-06FJX-06FJX90-06R1	
57	6578870	3	CLAMP-TUBELINE	
58	6626697	1	HOSE-08MJ-06FJX90-06R1	
59	6627634	1	HOSE-06FJX-06FJX45-06R1	
62	6670147	1	ACCUMULATOR	
63	6800357	1	HOSE-08FJX(2)-08R1 X017.7	
64	6801007	1	TUBELINE	
66	6801751	1	U BOLT	
67	6801752	1	BRACKET-CLAMP	
68	6801843	1	TUBELINE	

Copyright © 2007 AGCO Corporation

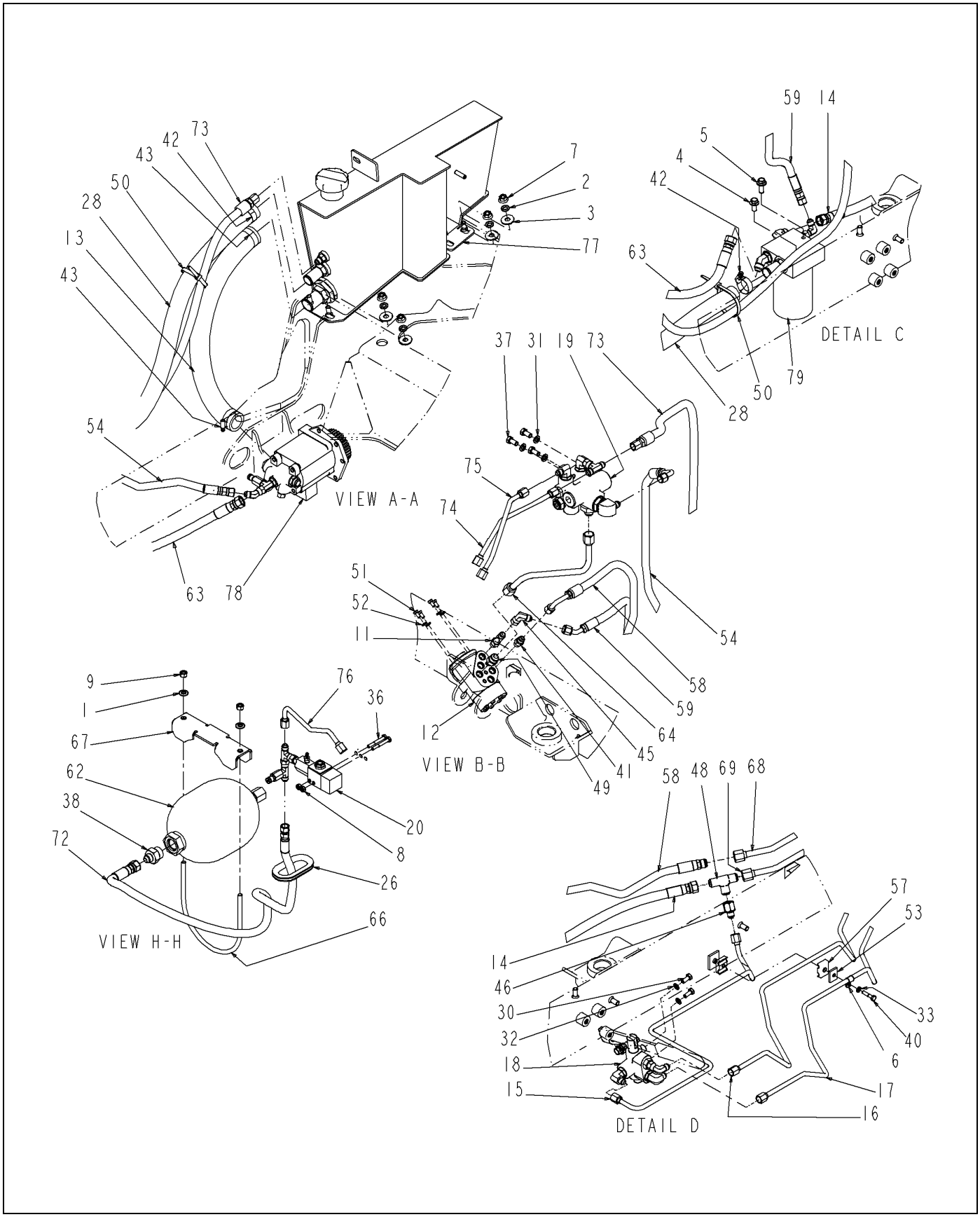

515763D1-01-R423-02.TIF

Copyright © 2007 AGCO Corporation

ITEM	PART #	QTY	DESCRIPTION	COMMENTS
69	6801844	1	TUBELINE	
72	6802465	1	HOSE-08FJX-06FJX-06R1	
73	6802800	1	HOSE-06FJX(2)-06R1 X073	
74	515771D1	1	TUBELINE ASSEMBLY	
75	515772D1	1	TUBELINE ASSEMBLY	
76	515774D1	1	TUBELINE ASSEMBLY	
77	516943D1	1	HYD TANK ASSEMBLY	SEE PAGE 7-59
78	517544D1	1	PUMP ASM-HYD	SEE PAGE 7-30
79	517545D1	1	FILTER ASM-HYD	SEE PAGE 7-55

Copyright © 2007 AGCO Corporation

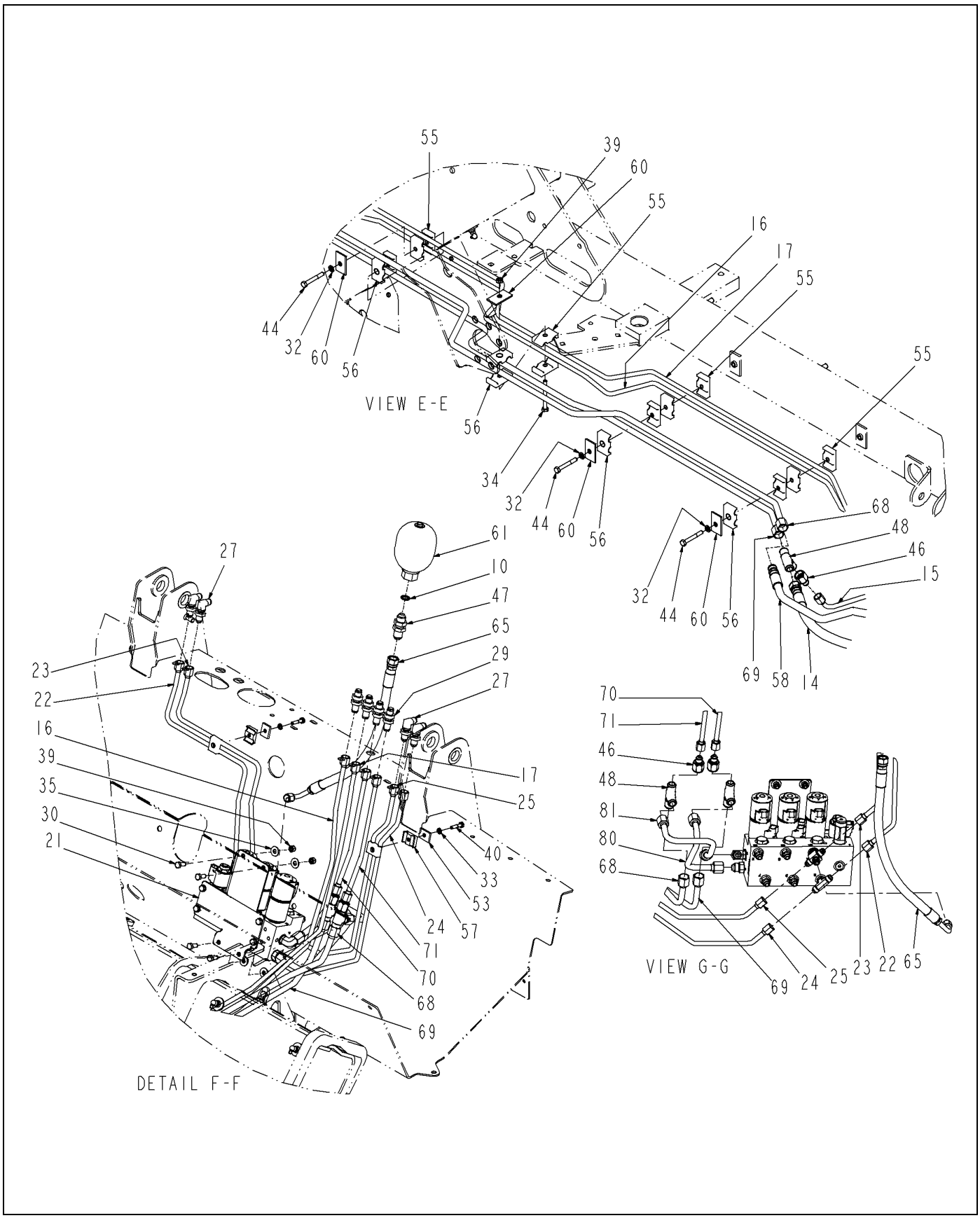

515763D1-01-R423-03.TIF

Copyright © 2007 AGCO Corporation

ITEM	PART #	QTY	DESCRIPTION	COMMENTS
10	WR55454	1	O RING-08MB,90 DUR	
14	WR129737	1	HOSE ASSY-8X25.7,08FJS/08FJS	
15	WR129751	1	ASM-TUBELINE,HYD,SPRA COUPE	
16	WR129752	1	ASM-TUBELINE,HYD,SPRA COUPE	
17	WR129753	1	ASM-TUBELINE,HYD,SPRA COUPE	
21	AG134520	1	ASM VALVE-HYD,4000,CHASSIS	SEE PAGE 7-54
22	WR134521	1	TUBE ASM-LOWER,RH,4000	
23	WR134522	1	TUBE ASM-RAISE,RH,4000	
24	WR134523	1	TUBE ASM-LOWER,LH,4000	
25	WR134524	1	TUBE ASM-RAISE,LH,4000	
27	AG514803	4	ELBOW 90D 0.37JICX0.37JIC BHD	
29	AG521798	4	UNION-BHD,.38MJIC	
30	AG550183	6	BOLT 0.31-18NCX 0.75 G5 ZN HHD	
32	AG550205	5	WASHER 0.31 LK ZN REG	
33	AG550493	3	WASHER 0.25 LK ZN REG	
34	AG550906	1	BOLT 0.31-18NCX 3.00 G5 ZN HHD	
35	AG551015	4	WASHER 0.31 FL ZN REG TYPE-B	
39	AG557668	5	NUT 0.31-18NC HEX ZN C-LK	
40	AG558788	3	BOLT 0.25-20NCX 1.25 G5 ZN HHD	
44	AG561251	3	BOLT 0.31-18NCX 2.25 G5 ZN HHD	
46	AG561834	3	ADAP STR-8FJX-6MJ	
47	AG562229	1	ADAP STR-8MJBHX-8MJ	
48	AG562346	3	TEE -8MJ	
53	6535422	3	WASHER-CLAMP	
55	6577696	4	CLAMP-TUBELINE	
56	6577697	4	CLAMP-TUBLINE	
57	6578870	3	CLAMP-TUBELINE	
58	6626697	1	HOSE-08MJ-06FJX90-06R1	
60	6652521	4	COVER-PLATE	
61	6669671	1	ACCUMULATOR	
65	6801342	1	HOSE-08FJX-06FJX90-06R1	
68	6801843	1	TUBELINE	
69	6801844	1	TUBELINE	
70	6801935	1	TUBELINE	
71	6801936	1	TUBELINE	
80	WR37374	1	TUBE ASSY-TANK,4000	
81	WR37375	1	TUBE ASSY-PUMP,4000	

Copyright © 2007 AGCO Corporation

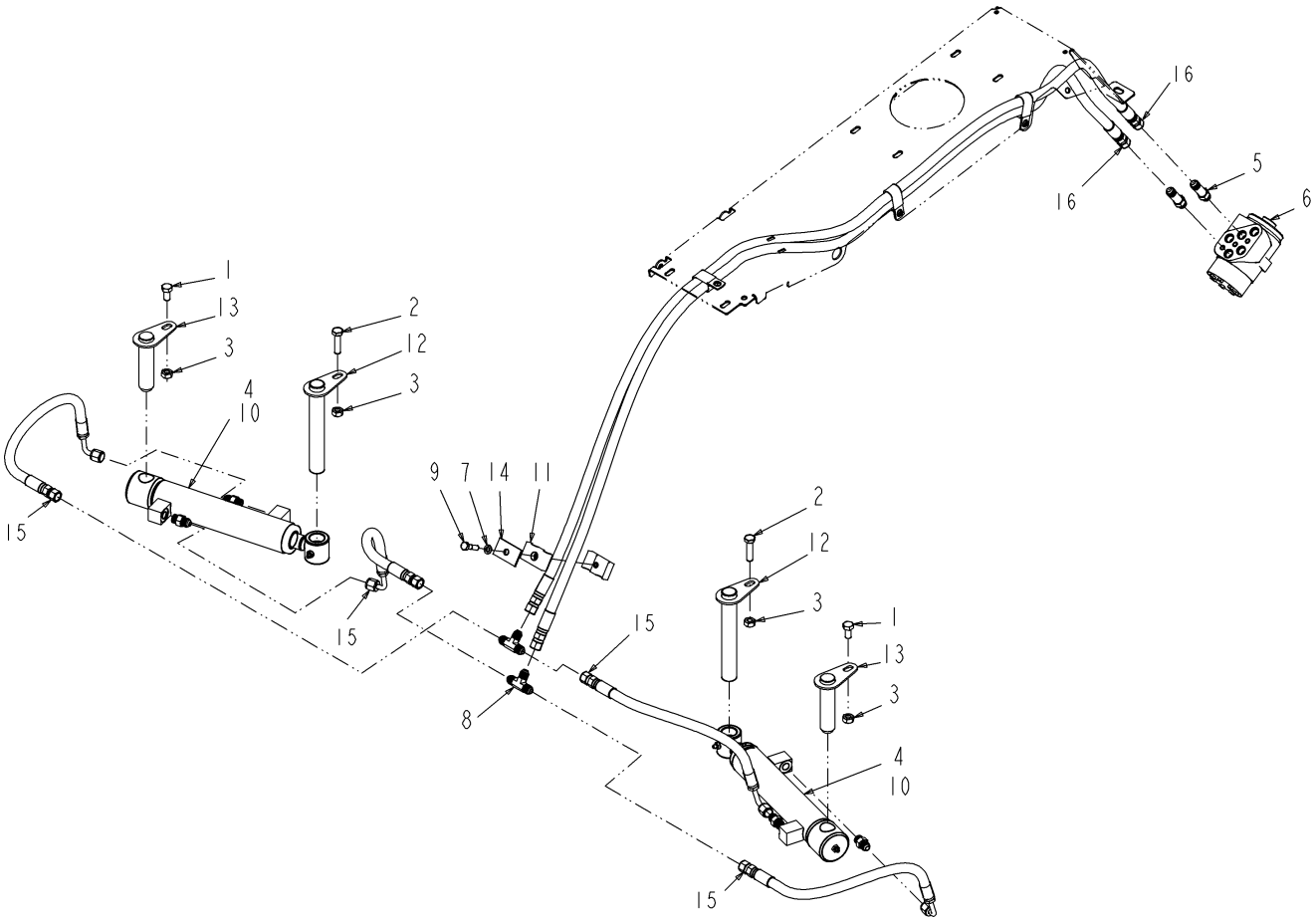

123630-07-R243-.TIF

Copyright © 2007 AGCO Corporation

ITEM	PART #	QTY	DESCRIPTION	COMMENTS
1	WR55046	2	SCREW-CAP HEX M10 X R/B 562463	
2	WR55047	2	SCREW-CAP HEX M10 X 40	
3	WR55272	4	NUT-LOCK,M10 X 1.5,PREV	
4	WR122423	2	CYLINDER-HYD,1.75X6.19X1.00	[A] SEE PAGE 7-36
5	AG122830	2	ADAP STR .37MORX.37MJIC LONG	
6	WR122985	1	VALVE, STEERING CONTROL	
7	AG550205	1	WASHER 0.31 LK ZN REG	
8	AG553514	2	TEE 0.37 MJIC (3)	
9	AG559105	1	BOLT 0.31-18NCX 1.25 G5 ZN HHD	
10	AG560693	4	ADAP STR 0.37MO-R X 0.37MJIC	
11	6577697	1	CLAMP-TUBLINE	
12	6597791	2	PIN-W/A	
13	6618836	2	PIN-W/A	
14	6652521	1	COVER-PLATE	
15	6702079	4	HOSE-06FJX-06FJX90-06R1	
16	6802800	2	HOSE-06FJX(2)-06R1 X073	
	FOOTNOTE [A]		ITEMS 8 - 15 CANNOT BE PURCHASED INDIVIDUALLY BUT ARE INCLUDED IN THE SEAL KIT.	

Copyright © 2007 AGCO Corporation

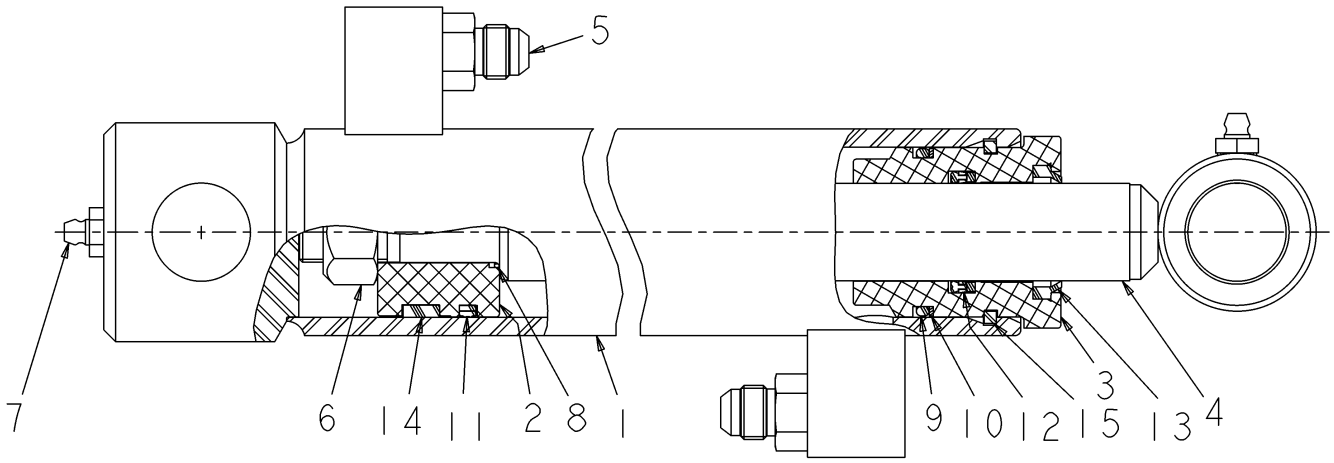

122423.TIF

Copyright © 2007 AGCO Corporation

CYLINDER-HYD,1.75X6.19X1.00

ITEM	PART #	QTY	DESCRIPTION	COMMENTS
REF	WR122432	-	SEAL KIT-09DM0023	
1	NS	-	NON-SERVICEABLE PART	
2	WR131625	1	PISTON	
3	WR131604	1	HEAD, GLAND	
4	WR131587	1	ROD, CYLINDER	
5	WR131555	2	CONNECTOR	
6	AG704757	1	NUT 0.62-18NF HEX ZN C-LK	[A]
7	AG550280	-	FITTING LUB.12-27NPTFX0.68	
	FOOTNOTE [A]		REPLACED BY AG557617	
	FOOTNOTE		ITEMS 8 - 15 CANNOT BE PURCHASED INDIVIDUALLY BUT ARE INCLUDED IN THE SEAL KIT.	

Copyright © 2007 AGCO Corporation

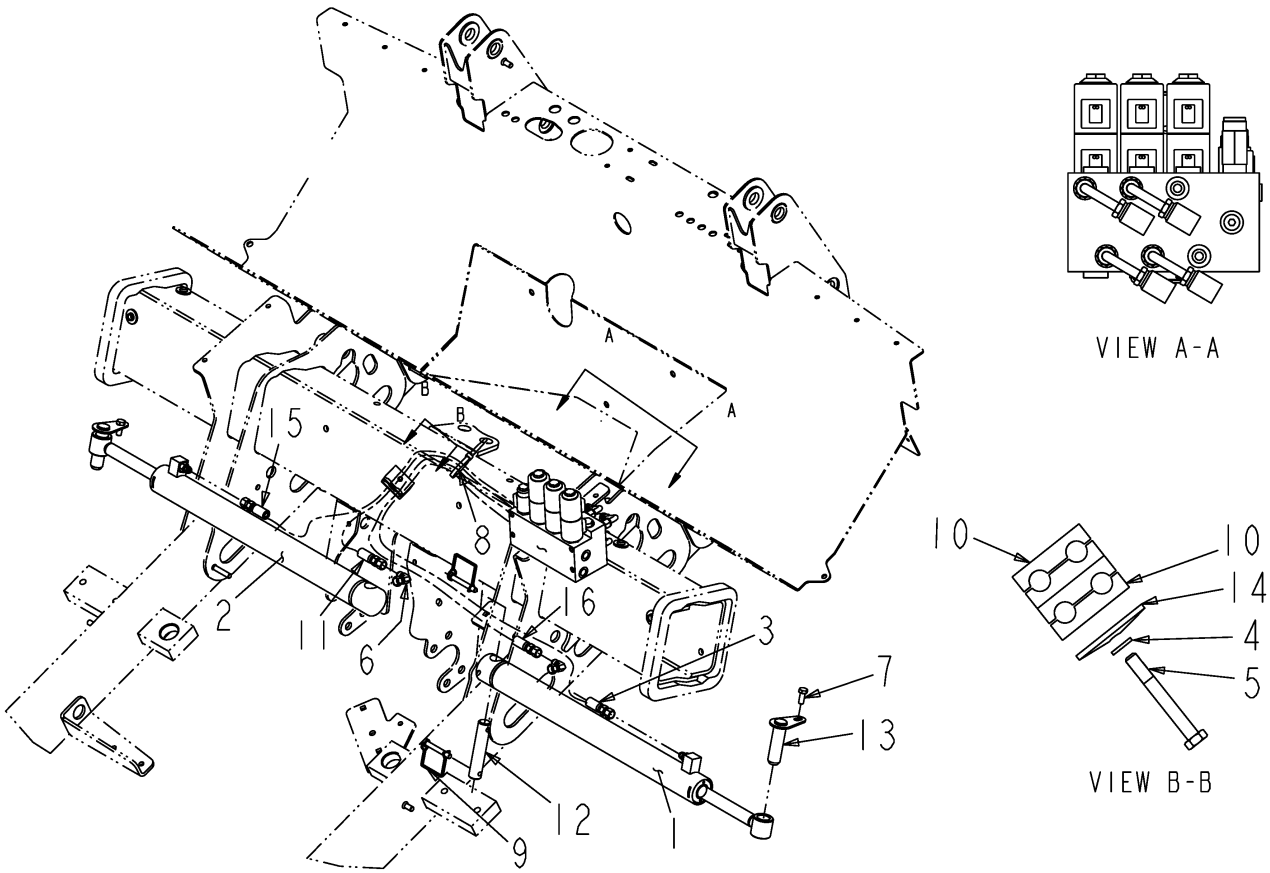

123631-04-N695-.TIF

Copyright © 2007 AGCO Corporation

HYD INSTL-80 AXLE ADJ, 4000

ITEM	PART #	QTY	DESCRIPTION	COMMENTS
1	WR122403	1	CYLINDER-HYD,2.00X20.00X1.00	[A] SEE PAGE 7-38
2	WR122414	1	CYLINDER-HYD,2.00X20.00X1.00	[B] SEE PAGE 7-39
3	WR125372	1	HOSE ASM-4X63.00 FJS/FJS90	
4	AG550205	1	WASHER 0.31 LK ZN REG	
5	AG561384	1	BOLT 0.31-18NCX 2.50 G5 ZN HHD	
6	AG561629	2	ELBOW -6FJS90X -6MJ	
7	AG561683	2	BOLT M10-1.5 X 25MM G8.8 ZN HH	
8	AG562496	3	TIE CABLE 15.0 .18-4.00 BLACK	
9	6510020	4	PIN-SNAPPER	
10	6577696	2	CLAMP-TUBELINE	
11	6618196	1	HOSE-06FJX-06FJX90-04R1	
12	6627461	2	PIN	
13	6627548	2	PIN-W/A	
14	6652521	1	COVER-PLATE	
15	6801931	1	HOSE-06FJX-06FJX90-04R1	
16	6801933	1	HOSE-06FJX-06FJX90-04R1	
	FOOTNOTE [A]		ITEMS 8 - 16 CANNOT BE PURCHASED INDIVIDUALLY BUT ARE INCLUDED IN THE SEAL KIT.	
	FOOTNOTE [B]		ITEMS 8 - 16 CANNOT BE PURCHASED INDIVIDUALLY BUT ARE INCLUDED IN THE SEAL KIT.	

Copyright © 2007 AGCO Corporation

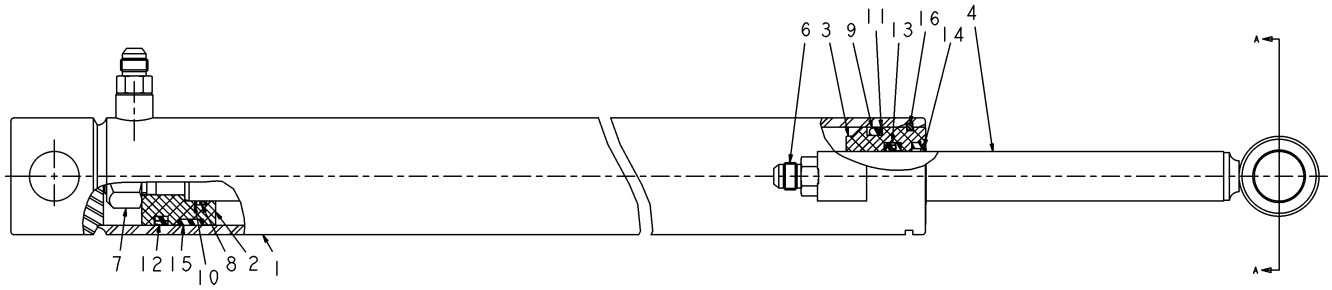

122403.TIF

Copyright © 2007 AGCO Corporation

CYLINDER-HYD,2.00X20.00X1.00

ITEM	PART #	QTY	DESCRIPTION	COMMENTS
REF	AG122433	-	SEAL KIT-092EM0134	
1	NS	-	NON-SERVICEABLE PART	
2	WR131617	1	PISTON	
3	72162717	1	A GLAND	
4	WR131571	1	ROD, CYLINDER	
5	WR131556	1	CONNECTOR	
6	WR131555	1	CONNECTOR	
7	AG061235	1	NUT/LOCK UNF .75-16	
	FOOTNOTE		ITEMS 8 - 16 CANNOT BE PURCHASED INDIVIDUALLY BUT ARE INCLUDED IN THE SEAL KIT.	

Copyright © 2007 AGCO Corporation

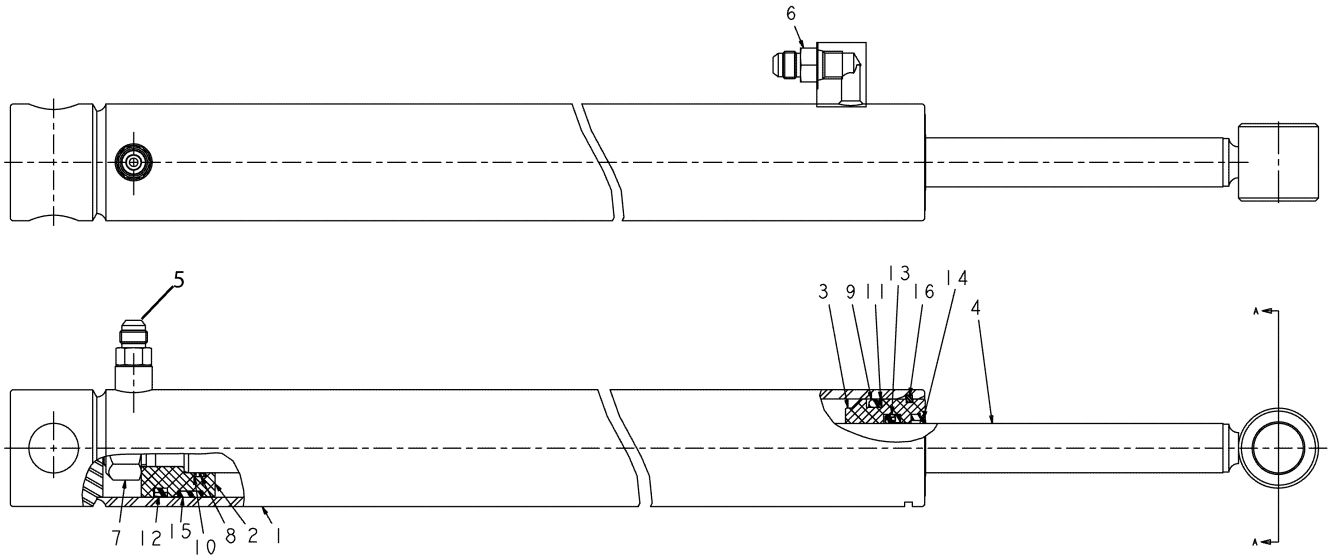

122414.TIF

Copyright © 2007 AGCO Corporation

CYLINDER-HYD,2.00X20.00X1.00

ITEM	PART #	QTY	DESCRIPTION	COMMENTS
REF	AG122433	-	SEAL KIT-092EM0134	
1	NS	-	NON-SERVICEABLE PART	
2	WR131617	1	PISTON	
3	72162717	1	A GLAND	
4	WR131571	1	ROD, CYLINDER	
5	WR131556	1	CONNECTOR	
6	WR131555	1	CONNECTOR	
7	AG061235	1	NUT/LOCK UNF .75-16	
	FOOTNOTE		ITEMS 8 - 16 CANNOT BE PURCHASED INDIVIDUALLY BUT ARE INCLUDED IN THE SEAL KIT.	

Copyright © 2007 AGCO Corporation

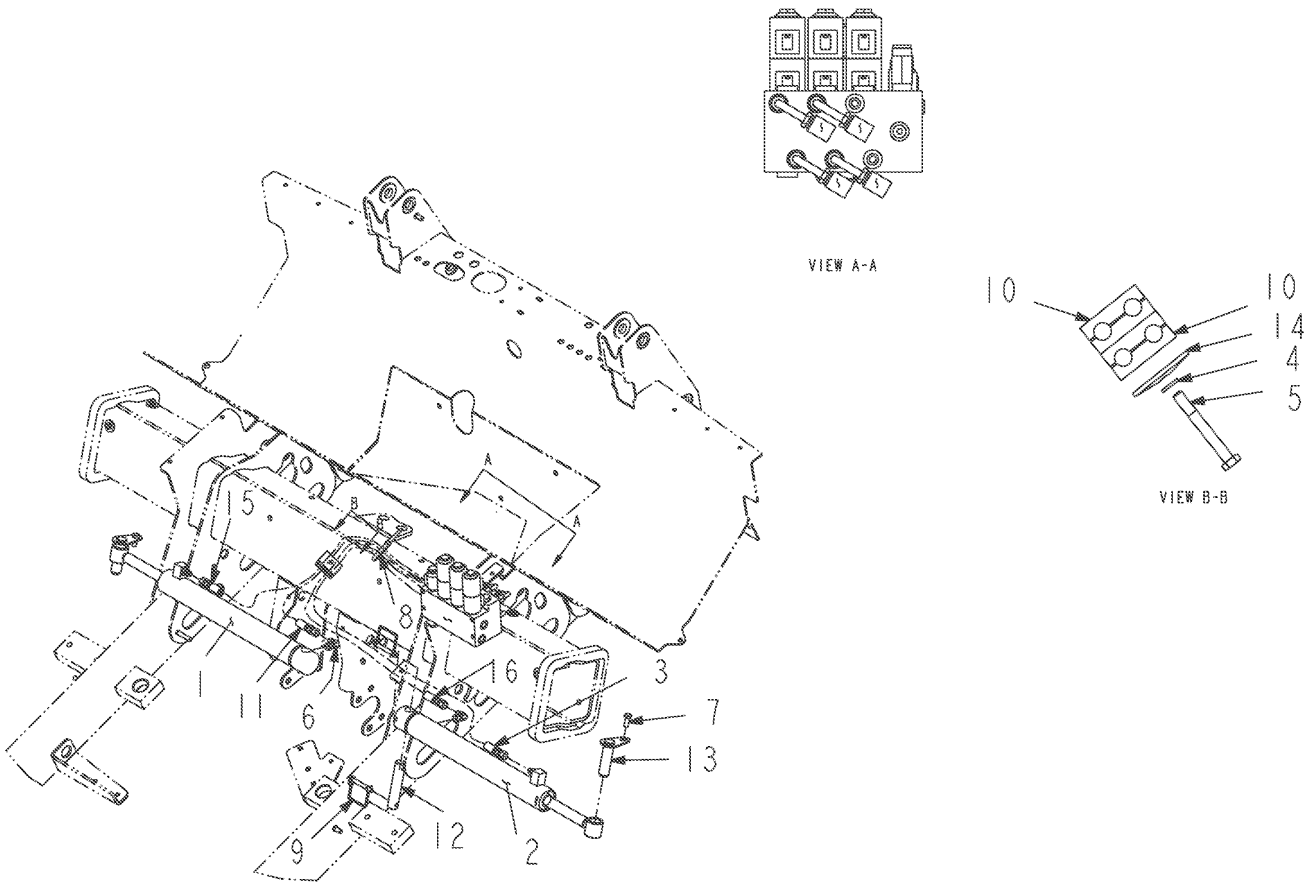

123632-04-N695-.TIF

Copyright © 2007 AGCO Corporation

HYD INSTL-72 AXLE ADJ, 4000

ITEM	PART #	QTY	DESCRIPTION	COMMENTS
1	WR122407	1	CYLINDER-HYD,2.00X15.25X1.00	[A] SEE PAGE 7-41
2	WR122408	1	CYLINDER-HYD,2.00X14.25X1.00	[B] SEE PAGE 7-62
3	WR125372	1	HOSE ASM-4X63.00 FJS/FJS90	
4	AG550205	1	WASHER 0.31 LK ZN REG	
5	AG561384	1	BOLT 0.31-18NCX 2.50 G5 ZN HHD	
6	AG561629	2	ELBOW -6FJS90X -6MJ	
7	AG561683	2	BOLT M10-1.5 X 25MM G8.8 ZN HH	
8	AG562496	3	TIE CABLE 15.0 .18-4.00 BLACK	
9	6510020	4	PIN-SNAPPER	
10	6577696	2	CLAMP-TUBELINE	
11	6618196	1	HOSE-06FJX-06FJX90-04R1	
12	6627461	2	PIN	
13	6627548	2	PIN-W/A	
14	6652521	1	COVER-PLATE	
15	6801931	1	HOSE-06FJX-06FJX90-04R1	
16	6801933	1	HOSE-06FJX-06FJX90-04R1	
	FOOTNOTE [A]		ITEMS 7 - 15 CANNOT BE PURCHASED INDIVIDUALLY BUT ARE INCLUDED IN THE SEAL KIT.	
	FOOTNOTE [B]		ITEMS 7 - 15 CANNOT BE PURCHASED INDIVIDUALLY BUT ARE INCLUDED IN THE SEAL KIT.	

Copyright © 2007 AGCO Corporation

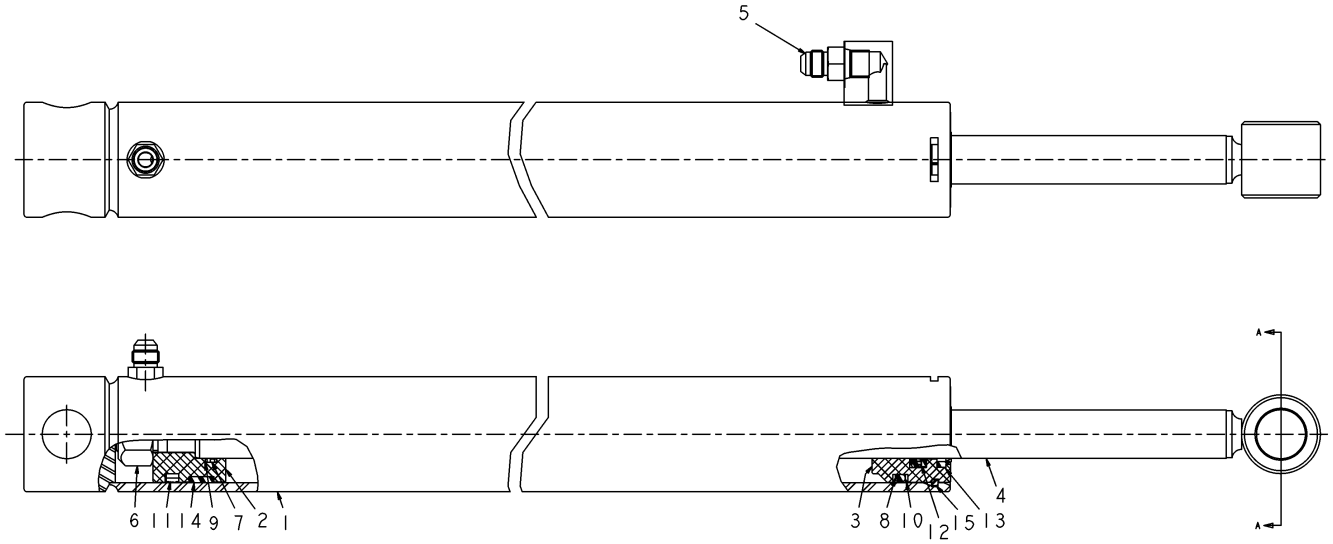

122407.TIF

Copyright © 2007 AGCO Corporation

CYLINDER-HYD,2.00X15.25X1.00

ITEM	PART #	QTY	DESCRIPTION	COMMENTS
REF	AG122433	-	SEAL KIT-092EM0134	
1	NS	-	NON-SERVICEABLE PART	
2	WR131617	1	PISTON	
3	72162717	1	A GLAND	
4	WR131573	1	ROD, CYLINDER	
5	WR131555	1	CONNECTOR	
6	AG061235	1	NUT/LOCK UNF .75-16	
	FOOTNOTE		ITEMS 7 - 15 CANNOT BE PURCHASED INDIVIDUALLY BUT ARE INCLUDED IN THE SEAL KIT.	

Copyright © 2007 AGCO Corporation

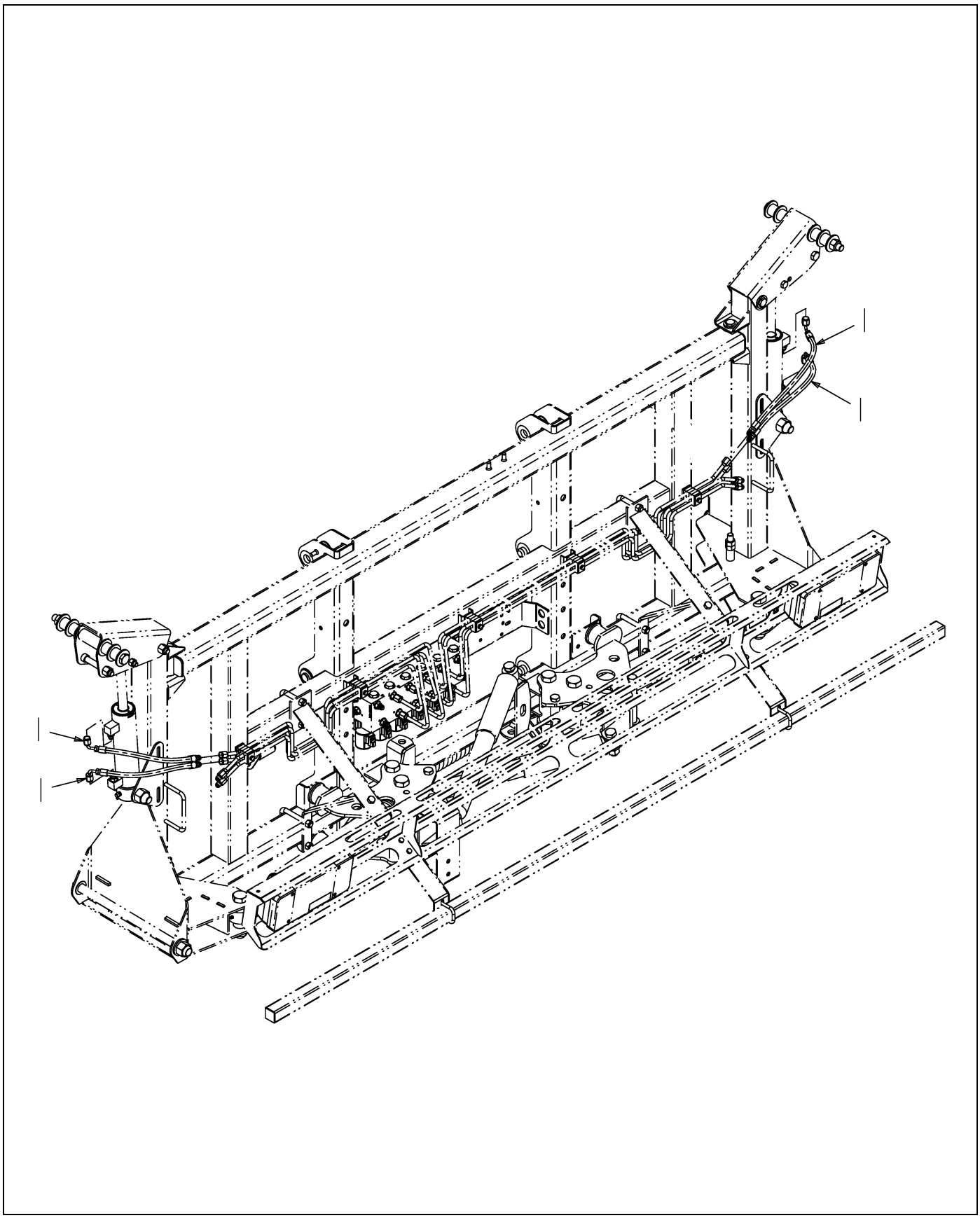

129756-A.TIF

Copyright © 2007 AGCO Corporation

HOSE INSTL-BM TILT,SC6080,7X50

ITEM	PART #	QTY	DESCRIPTION	COMMENTS
1	WR129754	4	HOSE ASM-4X23.00 6MJ/6FLS90	

Copyright © 2007 AGCO Corporation

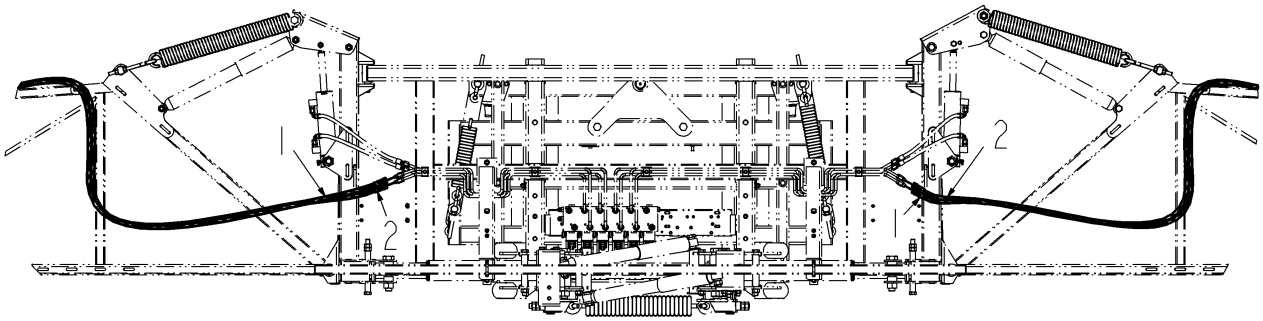

H-FRAME HYD TUBE CONNECTIONS

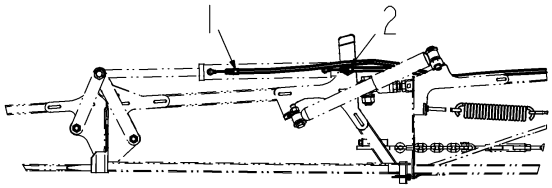

LH TIP FOLD CYLINDER

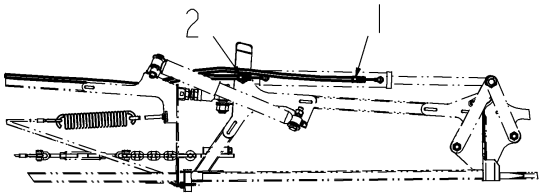

RH TIP FOLD CYLINDER

129757-B.TIF

Copyright © 2007 AGCO Corporation

HOSE INSTL-BM TIP,SC6080,7X50

ITEM	PART #	QTY	DESCRIPTION	COMMENTS
1	WR129893	2	HOSE ASM -4X330.00 6FJS/FJS	
2	WR129894	2	HOSE ASM -4X314.00 6FJS/FJS	

Copyright © 2007 AGCO Corporation

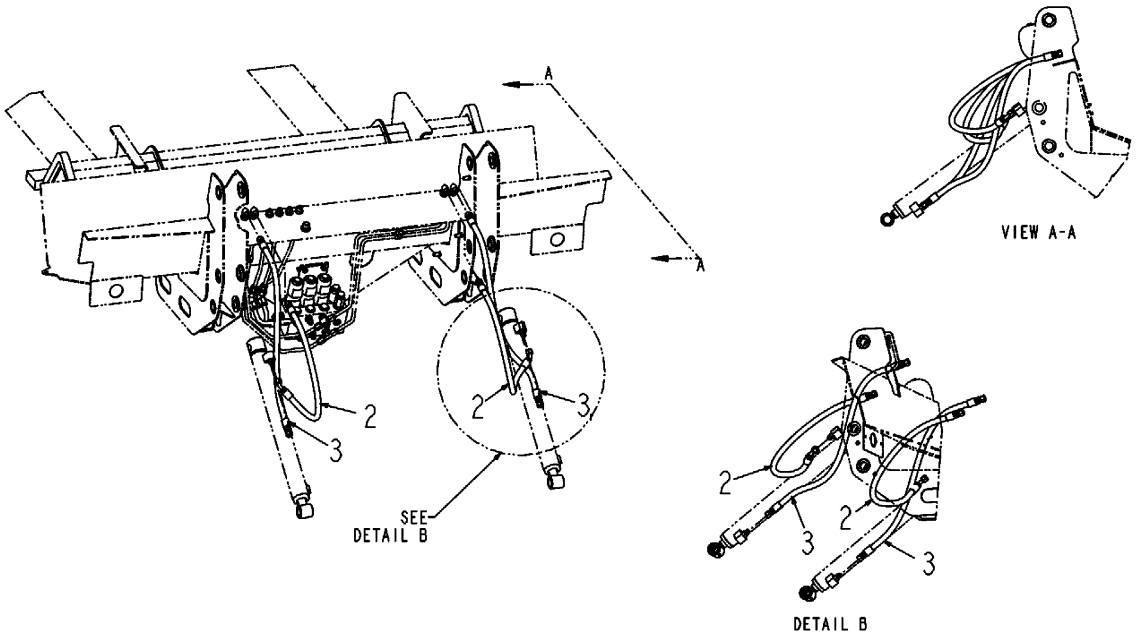

133625-A.TIF

Copyright © 2007 AGCO Corporation

HOSE INSTL-HYD,BM LFT,4X50

ITEM	PART #	QTY	DESCRIPTION	COMMENTS
1	AG133626	1	KIT-HOSE,HYD,BM LFT,4X50	
2	AG220601	-	HOSE ASM -6 28.00 R1AT	
3	AG260029	-	HOSE ASM -6X25.00 FJS/FJS45	

Copyright © 2007 AGCO Corporation

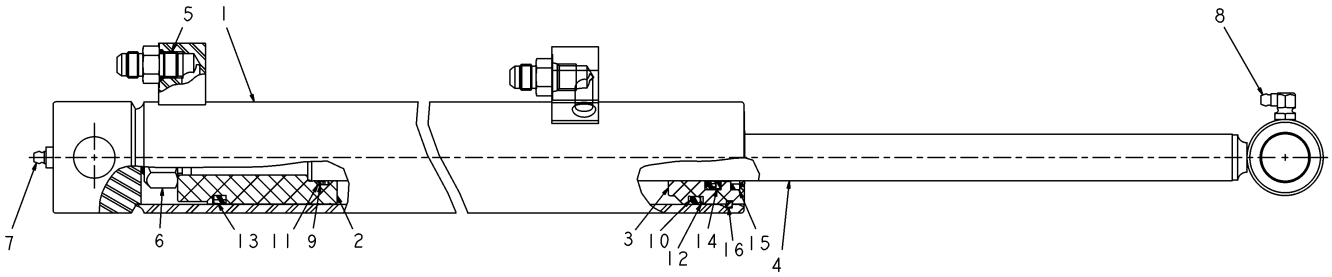

129450.TIF

Copyright © 2007 AGCO Corporation

CYLINDER-HYD,2.00X8.44X1.00

ITEM	PART #	QTY	DESCRIPTION	COMMENTS
REF	AG122433	-	SEAL KIT-092EM0134	
1	NS	-	NON-SERVICEABLE PART	
2	WR131620	1	PISTON	
3	72162717	1	A GLAND	
4	WR131576	1	ROD, CYLINDER	
5	WR131558	2	ASSEMBLY FITTING	
6	AG061235	1	NUT/LOCK UNF .75-16	
7	AG550280	-	FITTING LUB.12-27NPTFX0.68	
8	AG559083	-	FITTING LUB 90D 0.125 NPTF	
	FOOTNOTE		ITEM 1 CANNOT BE PURCHASED INDIVIDUALLY BUT IS INCLUDED WITH THE CYLINDER.	
	FOOTNOTE		ITEM 9 - 16 CANNOT BE PURCHASED INDIVIDUALLY BUT ARE INCLUDED IN THE SEAL KIT.	

Copyright © 2007 AGCO Corporation

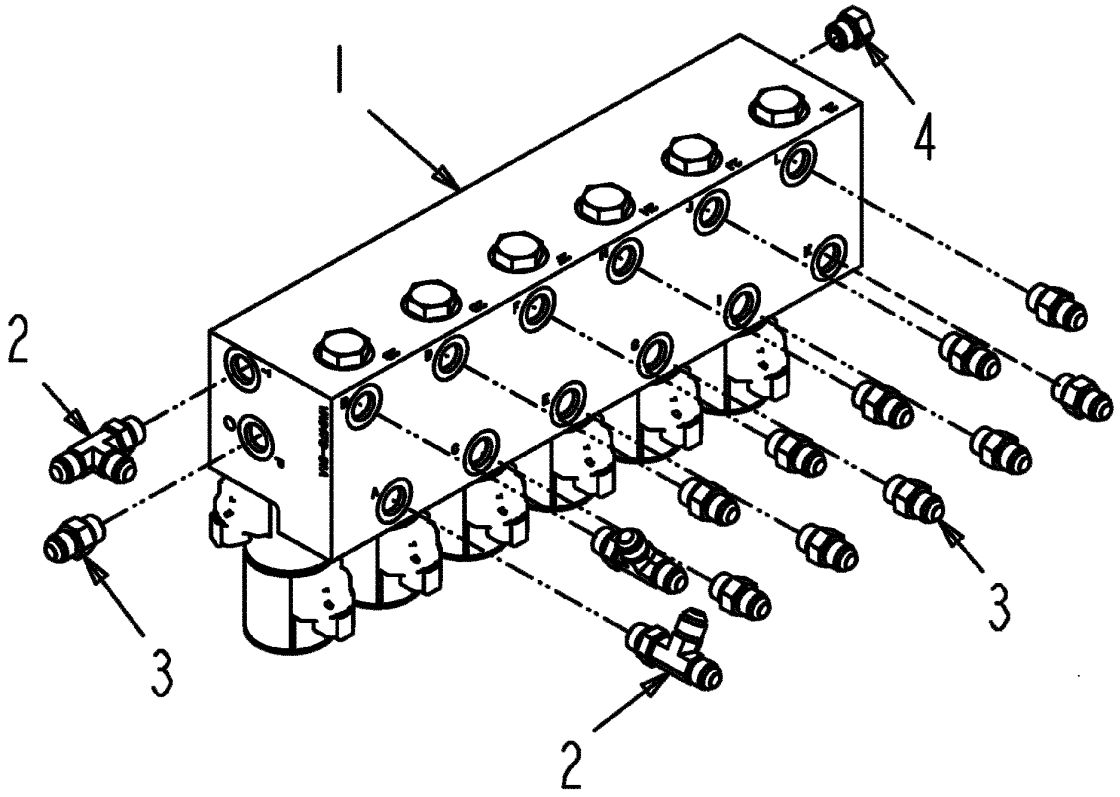

134266-02-M735-.tif

Copyright © 2007 AGCO Corporation

ASM VLAVE-HYD, H FRAME

ITEM	PART #	QTY	DESCRIPTION	COMMENTS
1	WR122642	1	VALVE-HYD,BOOM,6 BANK	SEE PAGE 7-63
2	AG519123	3	TEE-RUN,STR THD -6	[A]
3	AG560693	11	ADAP STR 0.37MO-R X 0.37MJIC	
4	AG561797	1	PLUG 0.37MO-R HEX	[B]
	FOOTNOTE [A]		AG713166 O-RING	
	FOOTNOTE [B]		AG713166 O-RING	

Copyright © 2007 AGCO Corporation

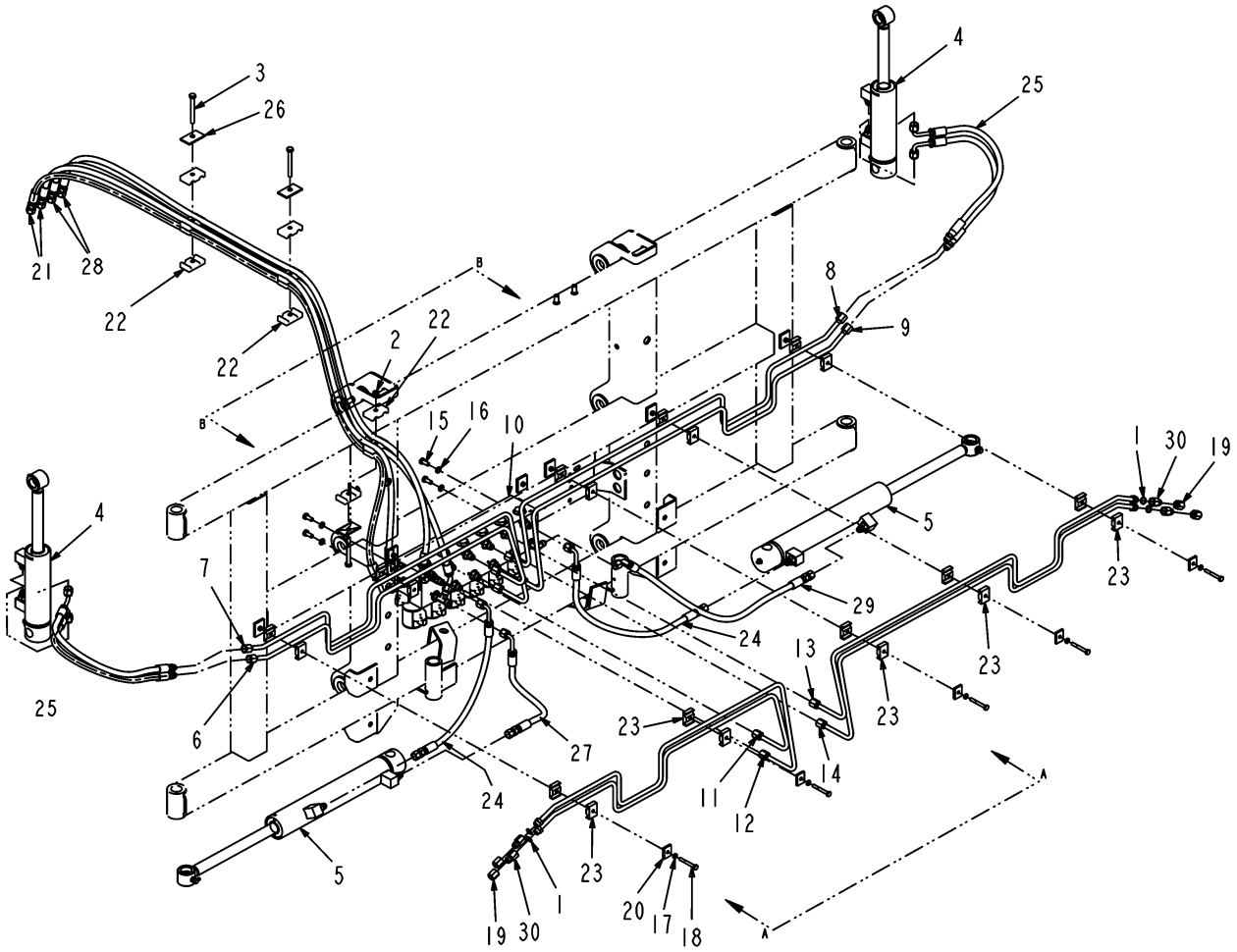

134282-02-M453-01.TIF

Copyright © 2007 AGCO Corporation

ITEM	PART #	QTY	DESCRIPTION	COMMENTS
1	WR28265	4	O-RING FOR -06 MB	
2	WR32254	1	NUT-TOPLOCK,M8-1.25	
3	WR55043	3	SCREW-CAP HEX M8 X 75	
4	WR122415	2	CYLINDER-HYD,2.00X4.00X1.00	[A] SEE PAGE 7-61
5	WR129450	2	CYLINDER-HYD,2.00X8.44X1.00	[B] SEE PAGE 7-45
6	WR134278	1	TUBE ASM-CENTER HYD	
7	WR134279	1	TUBE ASM-CENTER HYD	
8	WR134280	1	TUBE ASM-CENTER HYD	
9	WR134281	1	TUBE ASM-CENTER HYD	
10	AG134283	1	ASM VALVE-HYD, H FRAME	SEE PAGE 7-49
11	WR134284	1	TUBE ASM-CENTER HYD	
12	WR134286	1	TUBE ASM-CENTER HYD	
13	WR134287	1	TUBE ASM-CENTER HYD	
14	WR134288	1	TUBE ASM-CENTER HYD	
15	AG550183	4	BOLT 0.31-18NCX 0.75 G5 ZN HHD	
16	AG550205	4	WASHER 0.31 LK ZN REG	
17	AG550493	5	WASHER 0.25 LK ZN REG	
18	AG551279	5	BOLT 0.25-20NCX 2.00 G5 ZN HHD	
19	AG708307	4	NUT CAP 0.37 FJIC	
20	6535422	5	WASHER-CLAMP	
21	6537283	2	HOSE-06FJX-06FJX90-04R1	
22	6577696	12	CLAMP-TUBELINE	
23	6578870	20	CLAMP-TUBELINE	
24	6587032	2	HOSE-06FJX-06FJX90-04R1	
25	6626580	4	HOSE-06FJX90-06MJ-04R1	
26	6652521	3	COVER-PLATE	
27	6700024	1	HOSE-06FJX-06FX90-04R1	
28	6801494	2	HOSE-06FJX-06FJX45-04R1	
29	6801495	1	HOSE-06FJX-06FJX45-04R1	
30	507916D1	1	BAG-SHIPPING	
31	WR37846	4	ORIFICE-06FB-06MJ W/.20	
	FOOTNOTE [A]		ITEMS 9 - 17 CANNOT BE PURCHASED INDIVIDUALLY BUT ARE INCLUDED IN THE SEAL KIT.	
	FOOTNOTE [B]		ITEM 9 - 16 CANNOT BE PURCHASED INDIVIDUALLY BUT ARE INCLUDED IN THE SEAL KIT.	
	FOOTNOTE [B]		ITEM 1 CANNOT BE PURCHASED INDIVIDUALLY BUT IS INCLUDED WITH THE CYLINDER.	

Copyright © 2007 AGCO Corporation

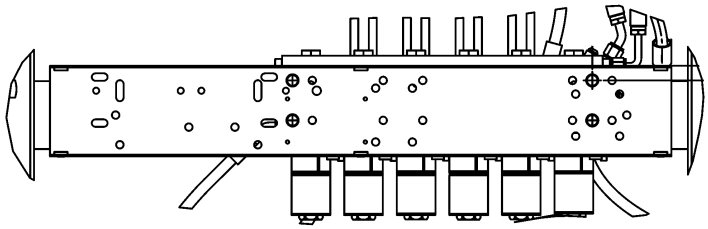

VIEW B-B

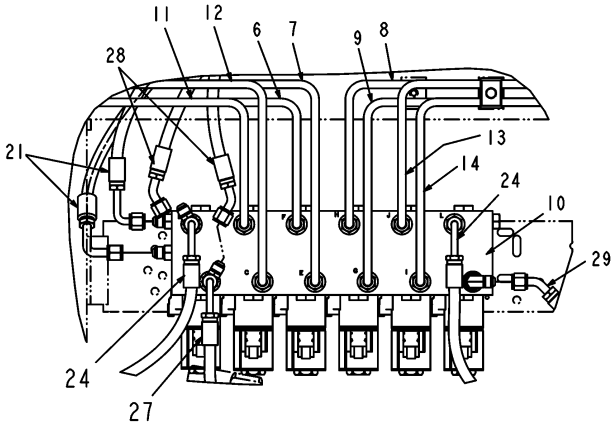

VIEW A-A

134282-02-M453-02.TIF

Copyright © 2007 AGCO Corporation

ITEM	PART #	QTY	DESCRIPTION	COMMENTS
6	WR134278	1	TUBE ASM-CENTER HYD	
7	WR134279	1	TUBE ASM-CENTER HYD	
8	WR134280	1	TUBE ASM-CENTER HYD	
9	WR134281	1	TUBE ASM-CENTER HYD	
10	AG134283	1	ASM VALVE-HYD, H FRAME	SEE PAGE 7-49
11	WR134284	1	TUBE ASM-CENTER HYD	
12	WR134286	1	TUBE ASM-CENTER HYD	
13	WR134287	1	TUBE ASM-CENTER HYD	
14	WR134288	1	TUBE ASM-CENTER HYD	
21	6537283	2	HOSE-06FJX-06FJX90-04R1	
24	6587032	2	HOSE-06FJX-06FJX90-04R1	
27	6700024	1	HOSE-06FJX-06FX90-04R1	
28	6801494	2	HOSE-06FJX-06FJX45-04R1	
29	6801495	1	HOSE-06FJX-06FJX45-04R1	

Copyright © 2007 AGCO Corporation

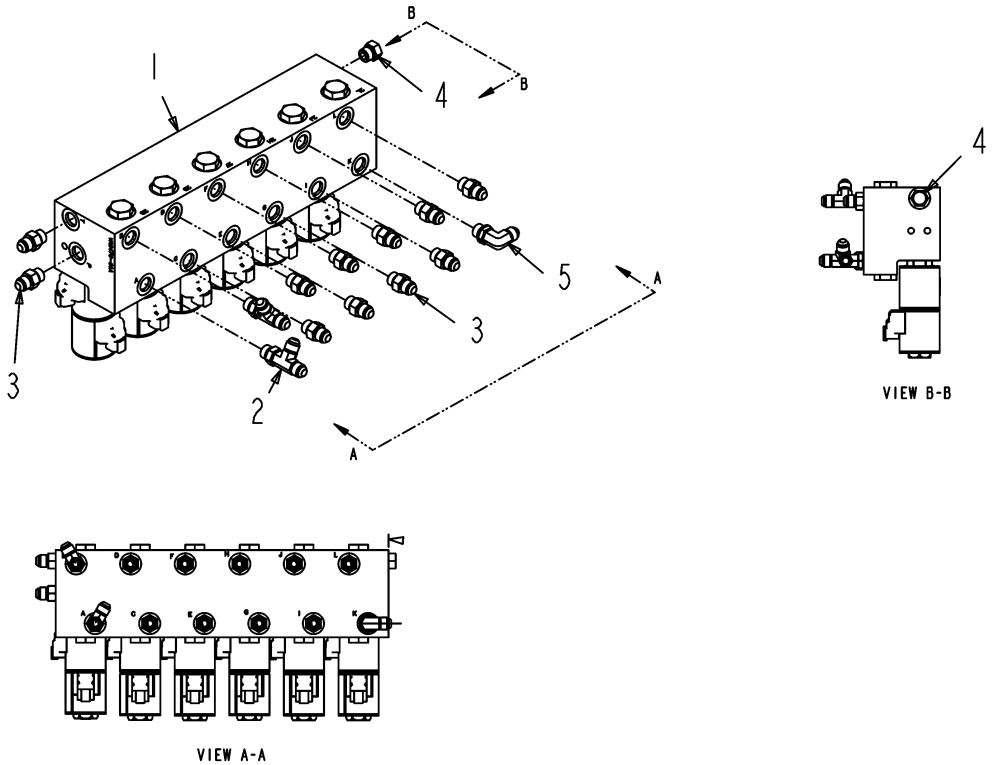

134283-A.TIF

Copyright © 2007 AGCO Corporation

ASM VALVE-HYD, H FRAME

ITEM	PART #	QTY	DESCRIPTION	COMMENTS
1	WR122642	1	VALVE-HYD,BOOM,6 BANK	SEE PAGE 7-63
2	AG519123	2	TEE-RUN,STR THD -6	[A]
3	AG560693	11	ADAP STR 0.37MO-R X 0.37MJIC	
4	AG561797	1	PLUG 0.37MO-R HEX	[B]
5	AG562401	1	ELBOW -6MB90X-6MJ	
	FOOTNOTE [A]		AG713166 O-RING	
	FOOTNOTE [B]		AG713166 O-RING	

Copyright © 2007 AGCO Corporation

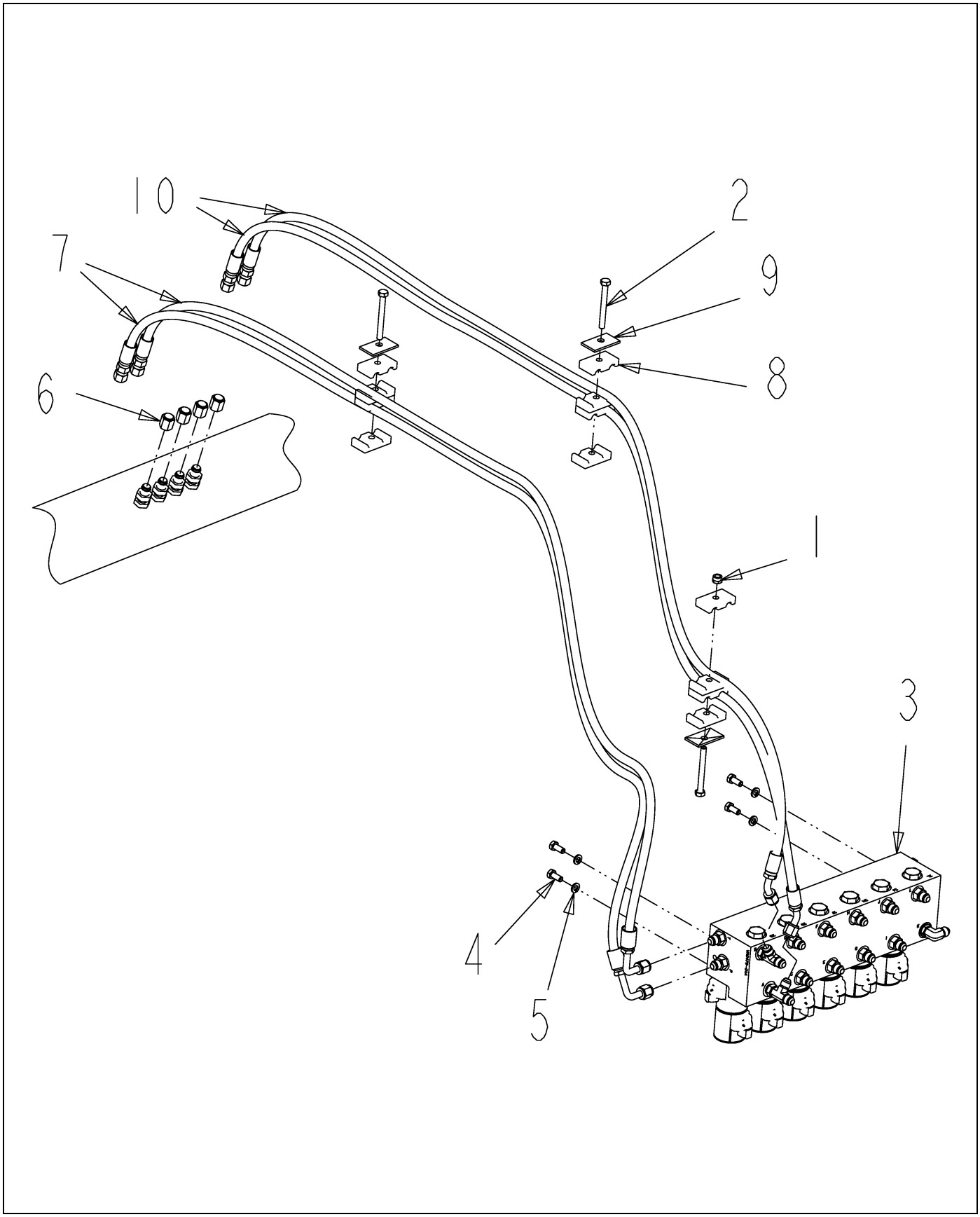

134289-03-N695-.TIF

Copyright © 2007 AGCO Corporation

HYD INSTL - NO H FRM

ITEM	PART #	QTY	DESCRIPTION	COMMENTS
1	WR32254	1	NUT-TOPLOCK,M8-1.25	
2	WR55043	3	SCREW-CAP HEX M8 X 75	
3	AG134283	1	ASM VALVE-HYD, H FRAME	SEE PAGE 7-49
4	AG550183	4	BOLT 0.31-18NCX 0.75 G5 ZN HHD	
5	AG550205	4	WASHER 0.31 LK ZN REG	
6	AG708307	4	NUT CAP 0.37 FJIC	
7	6537283	2	HOSE-06FJX-06FJX90-04R1	
8	6577696	6	CLAMP-TUBELINE	
9	6652521	3	COVER-PLATE	
10	6801494	2	HOSE-06FJX-06FJX45-04R1	
11	507916D1	1	BAG-SHIPPING	

Copyright © 2007 AGCO Corporation

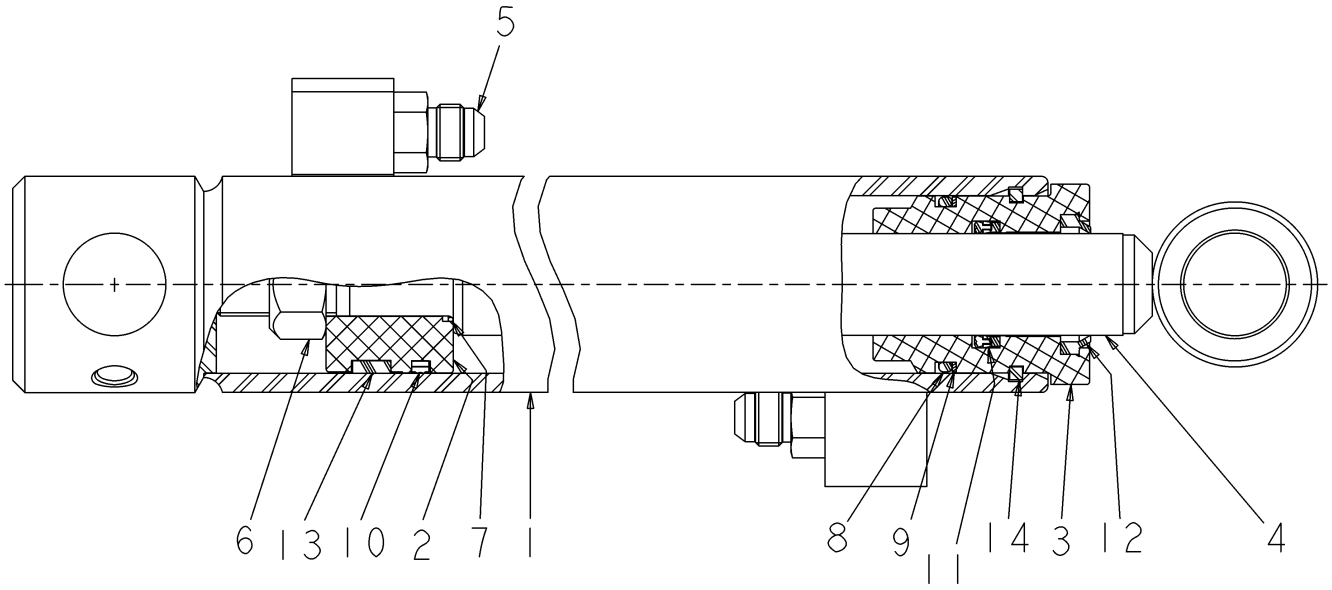

122424.TIF

Copyright © 2007 AGCO Corporation

CYLINDER-HYD,1.75X16.84X1.00

ITEM	PART #	QTY	DESCRIPTION	COMMENTS
REF	WR122432	-	SEAL KIT-09DM0023	
1	NS	-	NON-SERVICEABLE PART	
2	WR131625	1	PISTON	
3	WR131604	1	HEAD, GLAND	
4	WR131588	1	ROD, CYLINDER	
5	WR131555	2	CONNECTOR	
6	AG704757	1	NUT 0.62-18NF HEX ZN C-LK	[A]
	FOOTNOTE [A]		REPLACED BY AG557617	
	FOOTNOTE		ITEMS 7 - 14 CANNOT BE PURCHASED INDIVIDUALLY BUT ARE INCLUDED IN THE SEAL KIT.	

Copyright © 2007 AGCO Corporation

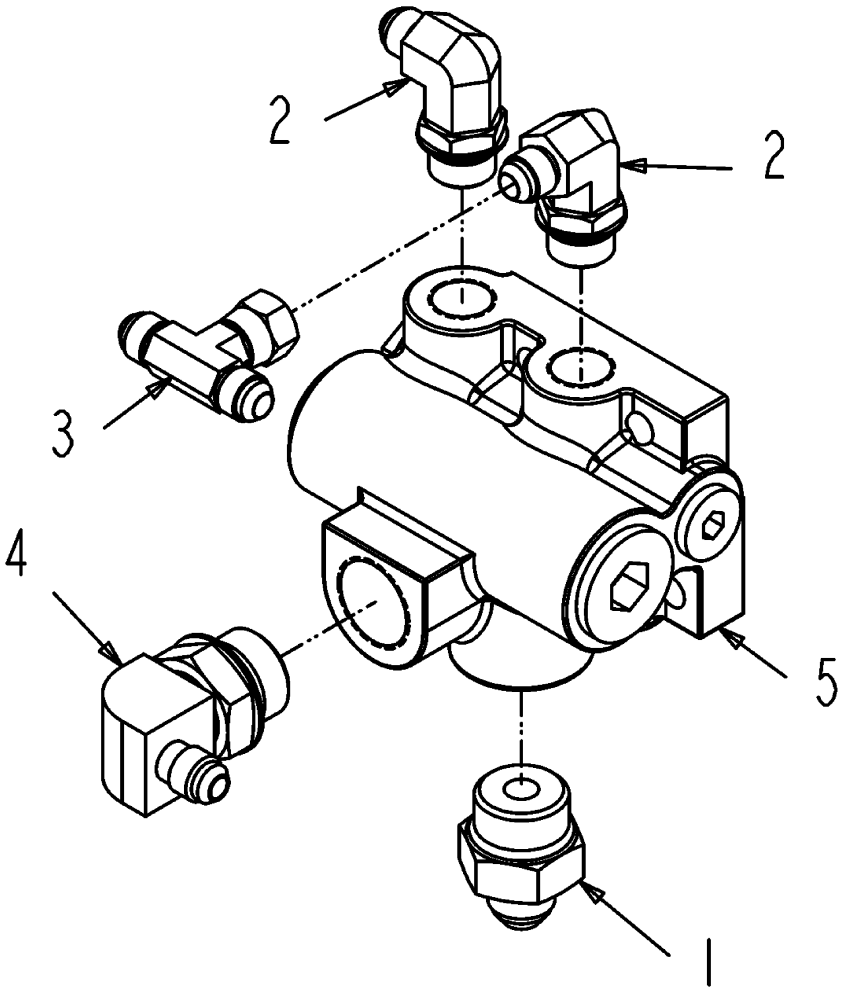

134517-A.TIF

Copyright © 2007 AGCO Corporation

ASM-VALVE CHARGE

ITEM	PART #	QTY	DESCRIPTION	COMMENTS
1	AG552194	1	ADAP STR 0.75MO-R X 0.50MJIC	
2	AG562204	2	ELBOW-8MB90X-6MJ	[A]
3	AG562709	1	TEE 0.37MJIC(2)X0.37FJIC SW	
4	6589193	1	ELBOW	
5	6669628	1	VALVE-CHARGE	
	FOOTNOTE [A]		AG713670 O-RING	

Copyright © 2007 AGCO Corporation

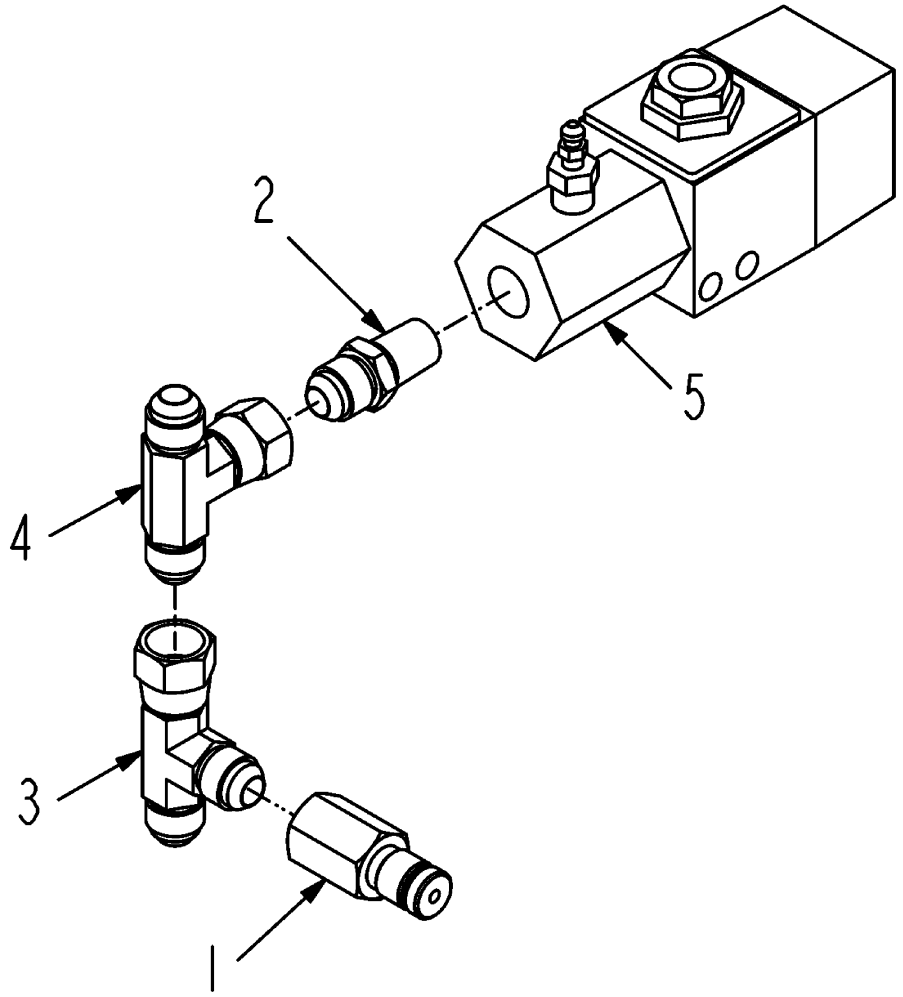

134519-A.TIF

Copyright © 2007 AGCO Corporation

ASM-SWITCH PRESSURE

ITEM	PART #	QTY	DESCRIPTION	COMMENTS
1	AG519114	1	TUBE END NIPPLE -6	
2	AG559148	1	ADAP STR 0.25MNPT X 0.37MJIC	
3	AG561391	1	TEE 0.37FJIC SW X 0.37MJIC(2)	
4	6670210	1	SWITCH-PRESSURE	

Copyright © 2007 AGCO Corporation

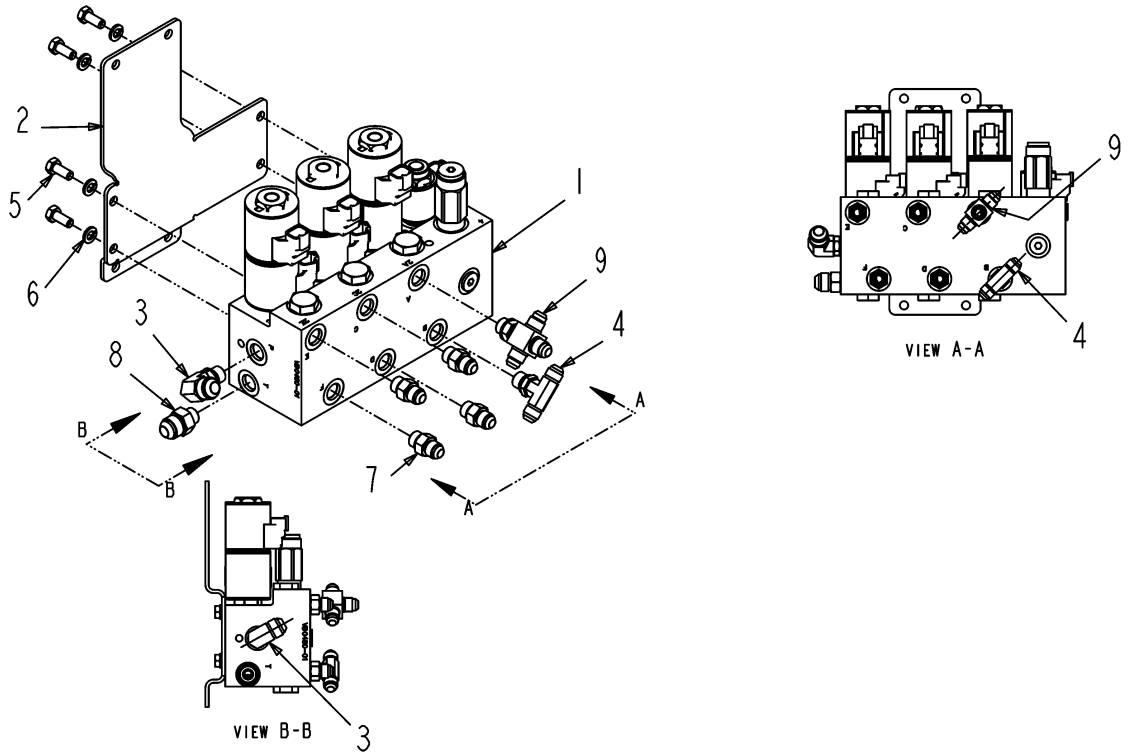

134520-A.TIF

Copyright © 2007 AGCO Corporation

ASM VALVE-HYD,4000,CHASSIS

ITEM	PART #	QTY	DESCRIPTION	COMMENTS
1	WR122643	1	VALVE-HYD,BM LFT/TRK ADJ,3BANK	SEE PAGE 7-64
2	WR134510	1	BRACKET-MTG, VALVE ASM	
3	AG514800	1	ELBOW-90D,-6MORX-8 MJIC	[A]
4	AG520285	1	TEE-6MOR X -6MJIC	
5	AG550183	4	BOLT 0.31-18NCX 0.75 G5 ZN HHD	
6	AG550205	4	WASHER 0.31 LK ZN REG	
7	AG560693	4	ADAP STR 0.37MO-R X 0.37MJIC	
8	AG562372	1	ADAP STR 0.37MO-R X 0.50MJIC	
9	6578209	1	CONNECTOR-CROSS	
	FOOTNOTE [A]		AG713166 - ORING	

Copyright © 2007 AGCO Corporation

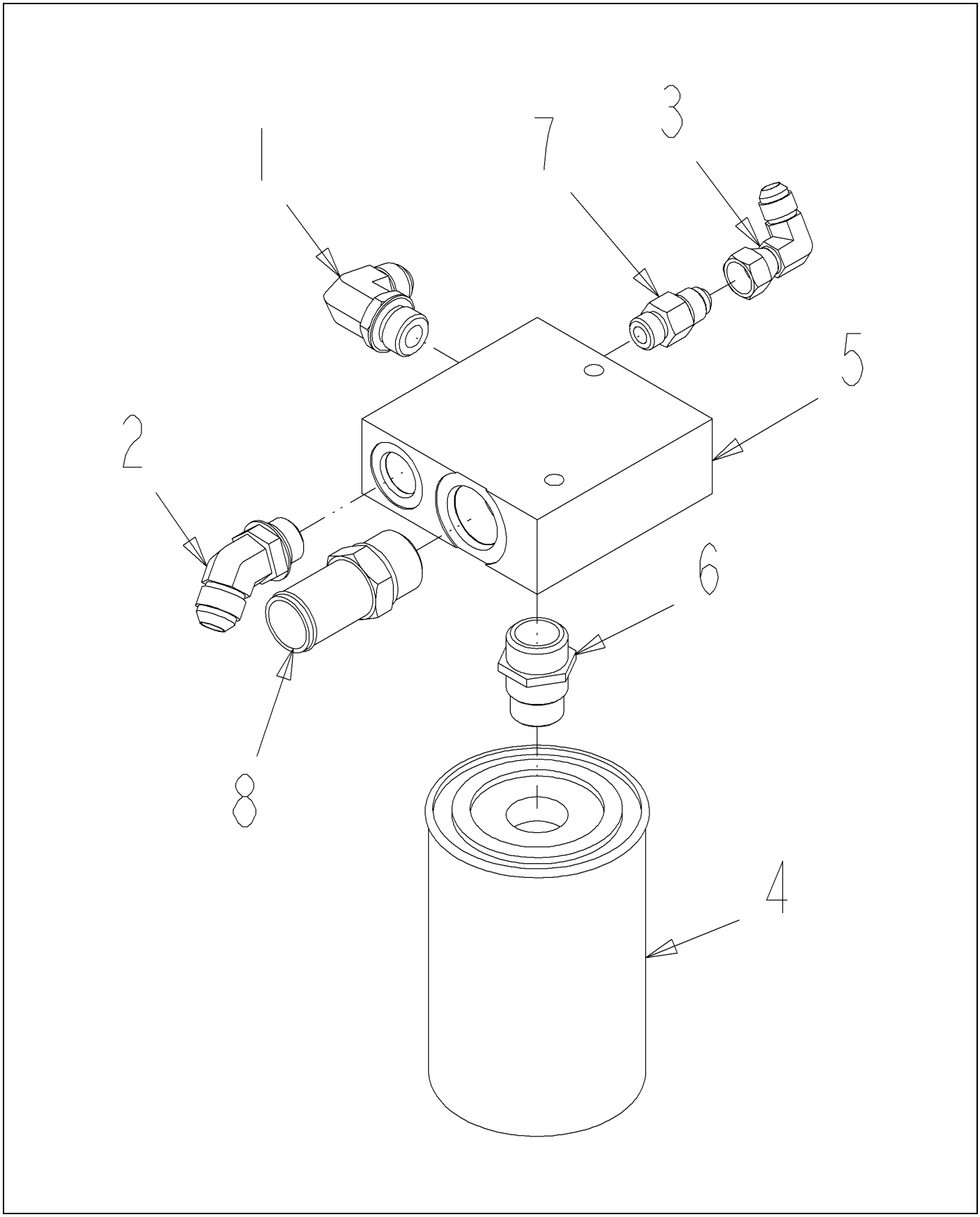

517545D1-01-R423-.TIF

Copyright © 2007 AGCO Corporation

FILTER ASM-HYD

ITEM	PART #	QTY	DESCRIPTION	COMMENTS
1	AG551112	1	ELBOW 90D 0.50MO-R X 0.50MJIC	[A]
2	AG553891	1	ELBOW 45D 0.50MO-R X 0.50MJIC	
3	AG561629	1	ELBOW -6FJS90X -6MJ	
4	6515541	1	FILTER-HYD	
5	6626606	1	BLOCK-FILTER PORT	
6	6626650	1	ADAPTER-FILTER	
7	6664332	1	VALVE-CHECK,INLINE	
8	6715715	1	FITTING-STR BEADED	
	FOOTNOTE [A]		AG713670-O-RING	

Copyright © 2007 AGCO Corporation

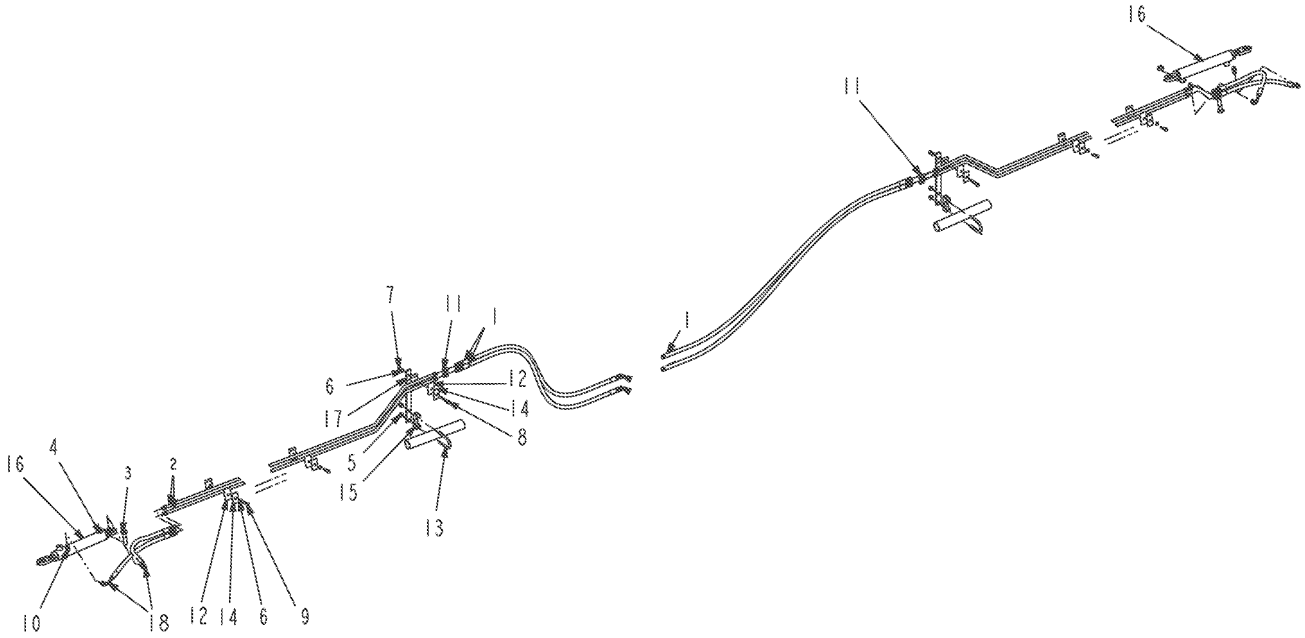

123635-07-R126-.TIF

Copyright © 2007 AGCO Corporation

HYD INSTL-BOOM FOLD

ITEM	PART #	QTY	DESCRIPTION	COMMENTS
1	WR25441	4	HOSE-06FJX(2)-06R1X032	
2	WR27966	4	TUBE ASSY-BOOM FOLD,90´	
3	WR35195	2	SCREW-CAP HEX 5/8 NC X	
4	WR55355	2	NUT-TOPLOCK,5/8-11UNC G8	
5	AG520885	4	NUT-.38-16,G5,ZN,FLG,H	
6	AG550205	10	WASHER 0.31 LK ZN REG	
7	AG550213	2	NUT 0.31-18NC HEX ZN REG	
8	AG552275	2	BOLT 0.31-18NCX 2.00 G5 ZN HHD	
9	AG559911	8	BOLT 0.31-18NCX 1.50 G5 ZN HHD	
10	AG560693	4	ADAP STR 0.37MO-R X 0.37MJIC	
11	AG708307	4	NUT CAP 0.37 FJIC	
12	6577696	10	CLAMP-TUBELINE	
13	6626119	2	U-BOLT	
14	6652521	10	COVER-PLATE	
15	6660351	2	CLAMP-SADDLE	
16	516448D1	2	CYLINDER-HYD,1.50X8.38X0.88	SEE PAGE 7-60
17	WR37855	2	BRACE-TUBE SUPPORT	
18	WR40884	4	HOSE-06FJX-06FJX90-06R17X	

Copyright © 2007 AGCO Corporation

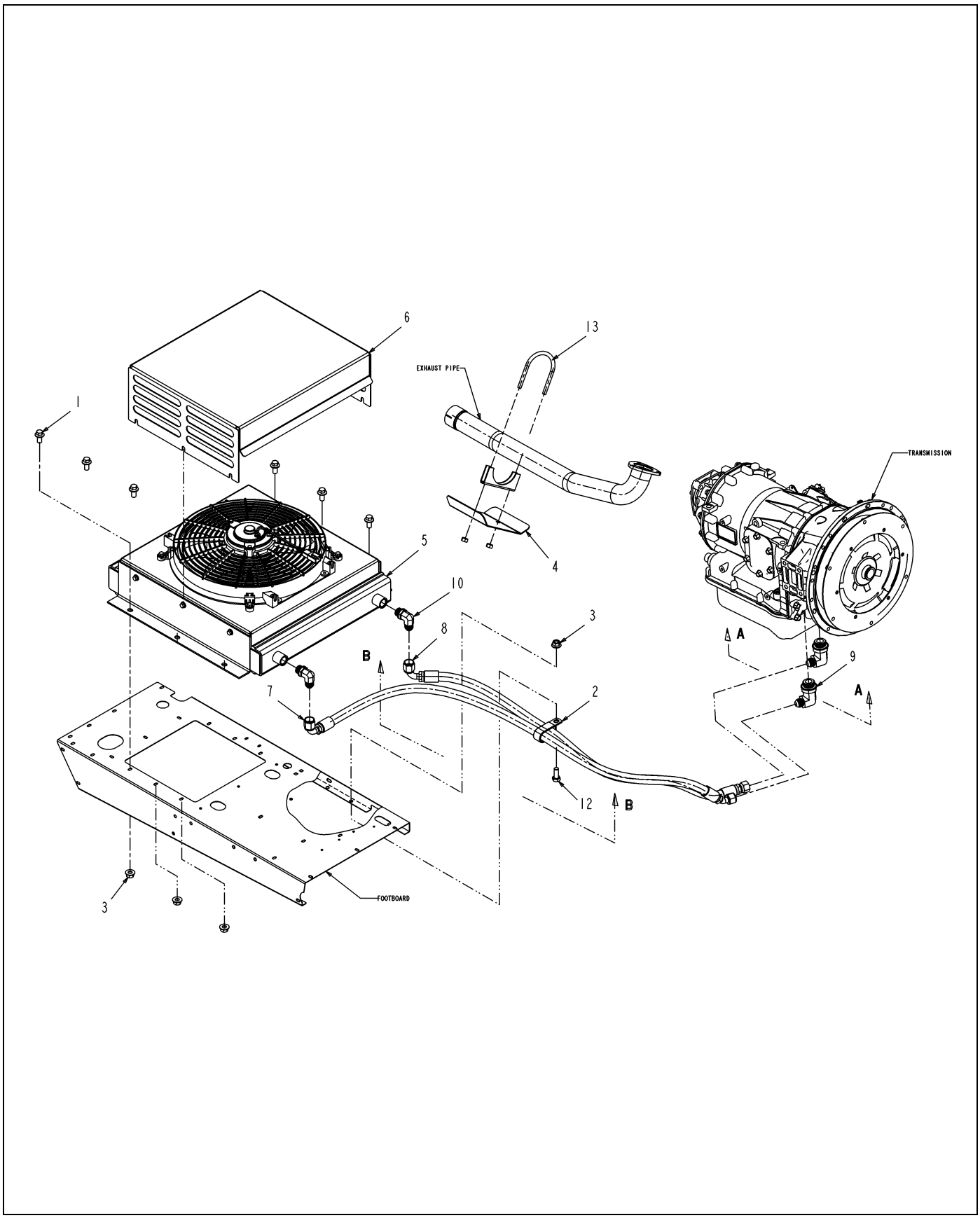

129741-1.TIF

Copyright © 2007 AGCO Corporation

COOLER INSTL-AT

ITEM	PART #	QTY	DESCRIPTION	COMMENTS
1	WR55214	6	SCREW-HEX FLG,M10X1.5X20 CL8.8	
2	WR55248	1	CLAMP-SUPPORT CUSHION DBL	
3	WR55301	7	NUT-FLANGE,M10 X 1.5,PREV	
4	WR129571	1	SHIELD-HEAT	
5	WR129895	1	COOLER ASM-AT OIL	
6	WR129898	1	SHIELD - OIL COOLER	
7	WR131024	1	HOSE ASM-8X48 FJS45/FJS90	
8	WR131085	1	HOSE ASM-8X40 FJS45/FJS90	
9	WR131092	2	ELBOW-90 .75MO-R X .50 MJIC	
10	WR131093	2	ELBOW-90 .50MO-R X .50 MJIC	
11	AG553557	AR	TIE CABLE 7.37 .06-1.37 BLACK	
12	AG561683	1	BOLT M10-1.5 X 25MM G8.8 ZN HH	
13	6595786	1	CLAMP-FULL CIRCLE	

Copyright © 2007 AGCO Corporation

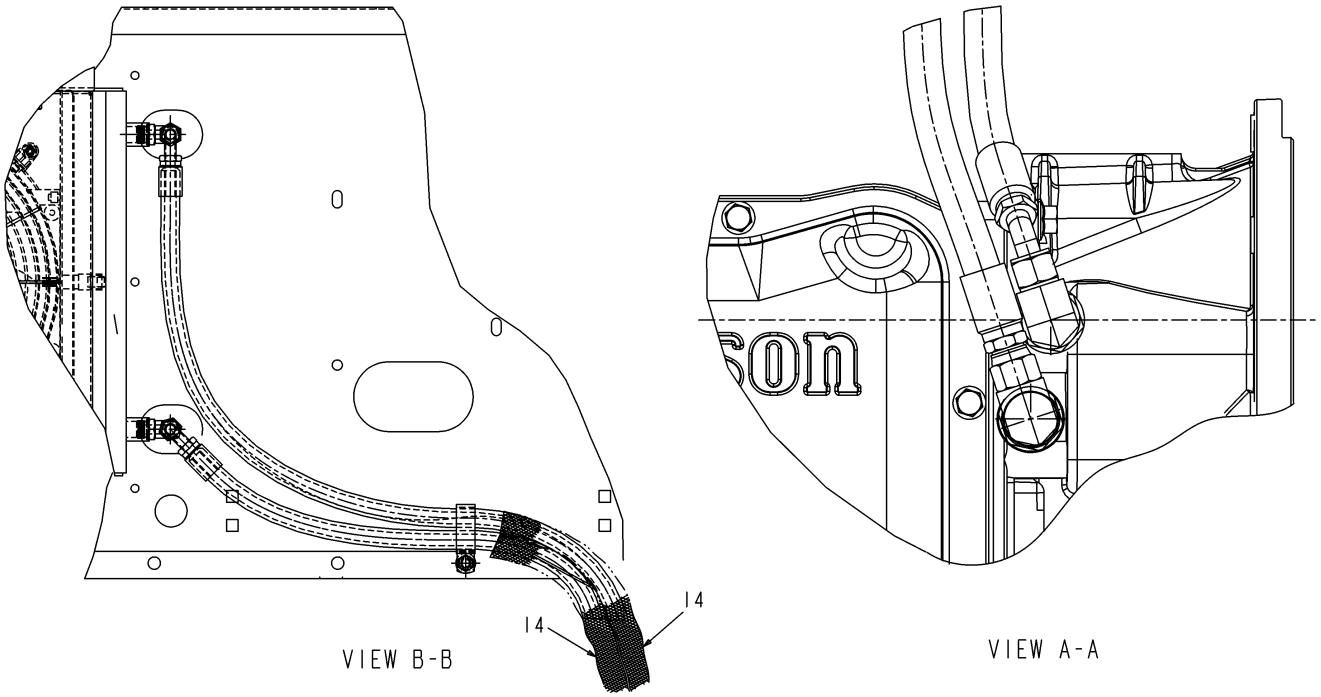

129741-2.TIF

Copyright © 2007 AGCO Corporation

ITEM	PART #	QTY	DESCRIPTION	COMMENTS
14	6656155	-	HOSE-BULK,NYLON [BULK: 3.500 FT]	

Copyright © 2007 AGCO Corporation

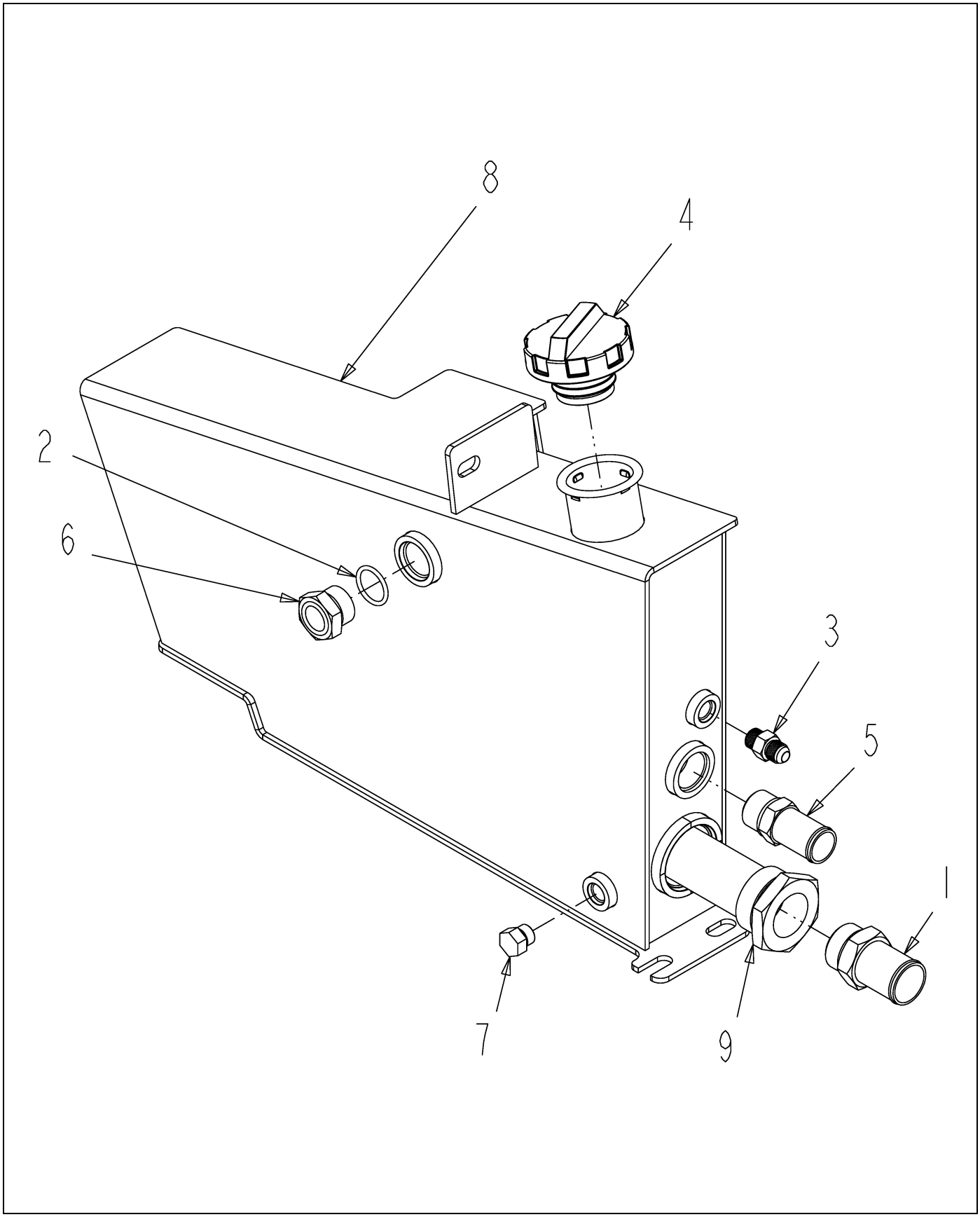

516943D1-01-N898-.TIF

Copyright © 2007 AGCO Corporation

HYD TANK ASSEMBLY

ITEM	PART #	QTY	DESCRIPTION	COMMENTS
1	WR35943	1	ADAPTER-16MB/-20HB	
2	WR55456	1	O RING-12MB,90 DUR	
3	AG560693	1	ADAP STR 0.37MO-R X 0.37MJIC	
4	6632468	1	CAP-STD	
5	6715715	1	FITTING-STR BEADED	
7	7000001	1	GAUGE-SIGHT LEVEL	
8	516700D1	1	TANK WLDMT-HYD	
9	516942D1	1	STRAINER,SUCTION,15GPM,-24/-16	

Copyright © 2007 AGCO Corporation

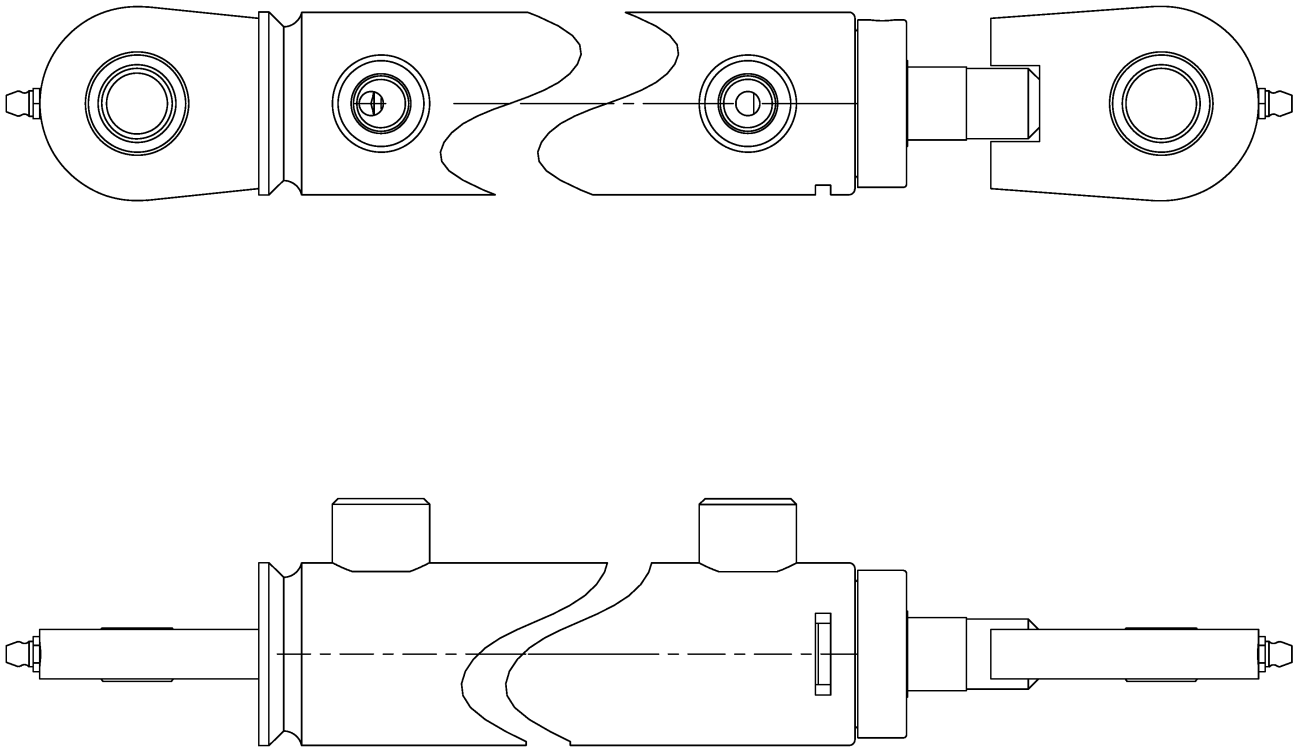

516448D1-01-R031-.TIF

Copyright © 2007 AGCO Corporation

CYLINDER-HYD,1.50X8.38X0.88

ITEM	PART #	QTY	DESCRIPTION	COMMENTS
REF	AG550280	-	FITTING LUB.12-27NPTFX0.68	

Copyright © 2007 AGCO Corporation

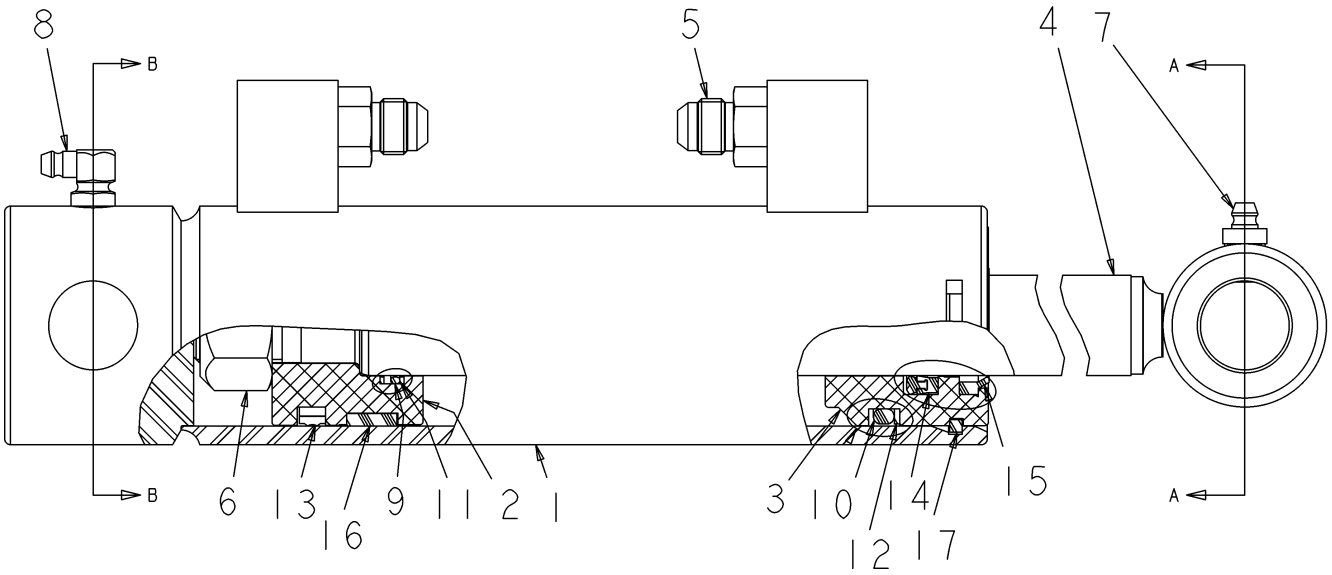

122415.TIF

Copyright © 2007 AGCO Corporation

CYLINDER-HYD,2.00X4.00X1.00

ITEM	PART #	QTY	DESCRIPTION	COMMENTS
REF	AG122433	-	SEAL KIT-092EM0134	
1	NS	-	NON-SERVICEABLE PART	
2	WR131617	1	PISTON	
3	72162717	1	A GLAND	
4	WR131580	1	ROD, CYLINDER	
5	WR131555	2	CONNECTOR	
6	AG061235	1	NUT/LOCK UNF .75-16	
7	AG550280	-	FITTING LUB.12-27NPTFX0.68	
8	AG559083	-	FITTING LUB 90D 0.125 NPTF	
	FOOTNOTE		ITEMS 9 - 17 CANNOT BE PURCHASED INDIVIDUALLY BUT ARE INCLUDED IN THE SEAL KIT.	

Copyright © 2007 AGCO Corporation

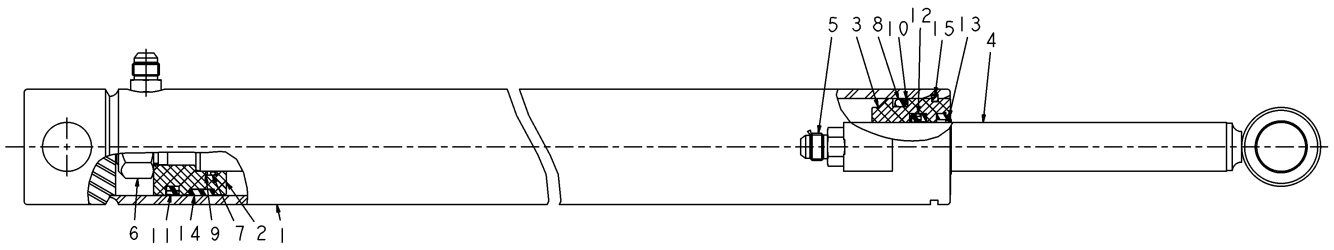

122408.TIF

Copyright © 2007 AGCO Corporation

CYLINDER-HYD,2.00X14.25X1.00

ITEM	PART #	QTY	DESCRIPTION	COMMENTS
REF	AG122433	-	SEAL KIT-092EM0134	
1	NS	-	NON-SERVICEABLE PART	
2	WR131617	1	PISTON	
3	72162717	1	A GLAND	
4	WR131573	1	ROD, CYLINDER	
5	WR131555	1	CONNECTOR	
6	AG061235	1	NUT/LOCK UNF .75-16	
	FOOTNOTE		ITEMS 7 - 15 CANNOT BE PURCHASED INDIVIDUALLY BUT ARE INCLUDED IN THE SEAL KIT.	

Copyright © 2007 AGCO Corporation

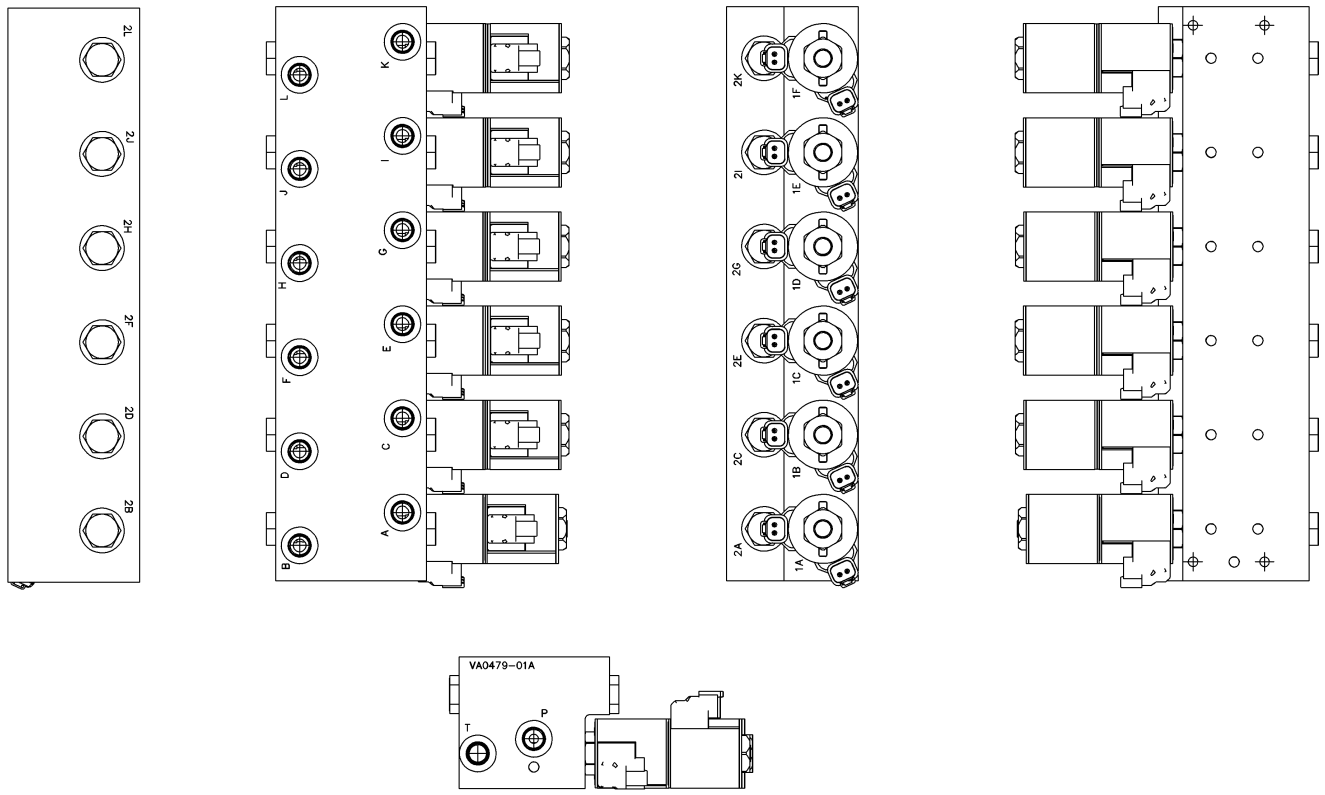

PORTS C,D.I & J	520434	PLATE-ORIFICE,2 WAY,THREADED
PORTS A,B,K & L	522023	PLATE-ORFICE,2 WAY,.040 DIA
PORT F & G	6662924	ORIFICE-TIP LIFT
2B,2D,2F,2H,2L	WR41967	PISTON-DBL PILOT, 4:1,
2A-2L	716811	KIT-ORING,ND VALVE(609465)
2A-2L	26528	VALVE-CHECK,CV08200N25
1A-1F	726854	NUT/PULL COIL E-SERIES
1A-1F	121485	SPACER-E COIL,10
1A-1F	121484	COIL-E,12VDC DEUTCH W/DIODE,10
1A-1F	715207	SEAL KIT
1A-1F	712150	VALVE CARTRIDGE 4WAY
CAVITY	PART NO	DESCRIPTION

122642-B.TIF

Copyright © 2007 AGCO Corporation

ITEM	PART #	QTY	DESCRIPTION	COMMENTS
REF	AG726854	-	NUT/PULL COIL E-SERIES	

Copyright © 2007 AGCO Corporation

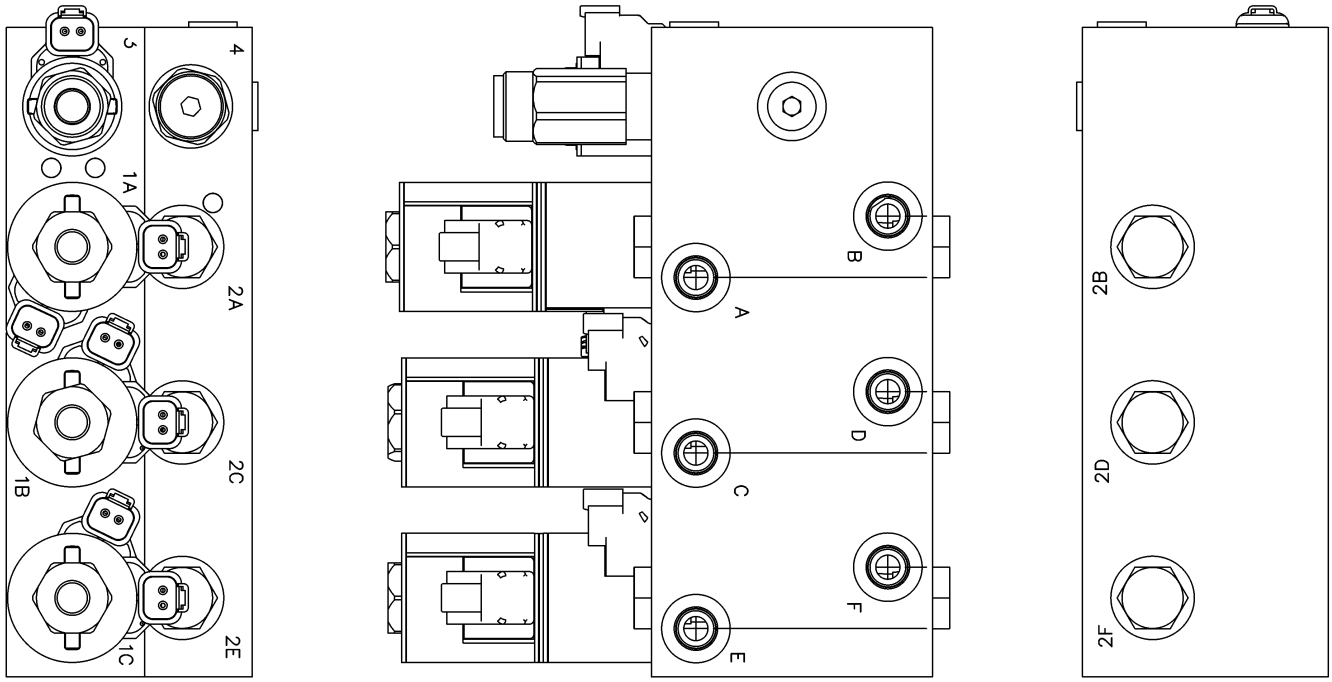

PORT A	6662881	ORIFICE-BOOM LIFT
4	WR38762	VALVE-CARTRIDGE,RELIEF-08
3	128405	NUT-PUSH,E-SERIES,#8
3	121483	COIL-E,12VDC DEUTCH W/DIODE,08
3	609465	HYDRAFORCE N D VALVE
2B,2D,2F	WR41967	PISTON-DBL PILOT, 4:1,
2A-2F,3,4	716811	KIT-ORING,ND VALVE(609465)
2A-2F	26528	VALVE-CHECK,CV08200N25
1A-1C	726854	NUT/PULL COIL E-SERIES
1A-1C	121485	SPACE-E COIL,10
1A-1C	121484	COIL-E,12VDC DEUTCH W/DIODE,10
1A-1C	715207	SEAL KIT
1A-1C	712150	VALVE CARTRIDGE 4WAY
CAVITY	PART NO	DESCRIPTION

122643.TIF

Copyright © 2007 AGCO Corporation

VALVE-HYD,BM LFT/TRK ADJ,3BANK

ITEM	PART #	QTY	DESCRIPTION	COMMENTS
REF	AG712150	-	VALVE CARTRIDGE 4WAY	
REF	6662881	-	ORIFICE-BOOM LIFT	
REF	AG609465	-	HYDRAFORCE N D VALVE	
REF	AG726854	-	NUT/PULL COIL E-SERIES	
REF	AG716811	-	KIT-ORING,ND VALVE(609465)	
REF	AG715207	-	SEAL KIT	
REF	WR26528	-	VALVE-CHECK,CV08200N25	
REF	AG121483	-	COIL-E,12VDC DEUTCH W/DIODE,08	
REF	WR41967	-	PISTON-DBL PILOT, 4:1,	
REF	WR38762	-	VALVE-CARTRIDGE,RELIEF-08	
REF	WR128405	-	NUT-PUSH,E-SERIES,#8	
REF	AG121485	-	SPACER-E COIL,10	
REF	AG121484	-	COIL-E,12VDC DEUTCH W/DIODE,10	

Copyright © 2007 AGCO Corporation

PEDAL-THROTTLE	8-1
PEDAL ASSY-4X60 BRAKE	8-2
PEDAL ASSY-4X60 BRAKE	8-3
STEERING COLUMN#9203218-C	8-4
STEERING COLUMN#9203218-C	8-5
SEAT GP-BASIC	8-6
SEAT INSTL	8-7
SEAT GP-MECH SUSPENSION	8-8
SEAT GP-DELUXE	8-9
SEAT INSTL-DELUX, AUTO TRANS	8-10
SEAT INSTL-DELUX, AUTO TRANS	8-11
SEAT GP-AIR SUSPENSION	8-12
CAB INSTL - 4000 AT, CHAL	8-13
CAB INSTL - 4000 AT, CHAL	8-14
CAB INSTL - 4000 AT, CHAL	8-15
CAB INSTL - 4000 AT, CHAL	8-16
CAB TOP ASSY-CHAL	8-17
KIT-RADIO,XM	8-18
INSTL-ANTENNA,SAT	8-19
KIT-RADIO,SIRIUS	8-20
KIT-RADIO AM/FM STEREO W/CD	8-21
KIT-RADIO,DELUXE	8-22
JOYSTICK INSTL	8-23
GROUP-RADIO ACC.	8-24

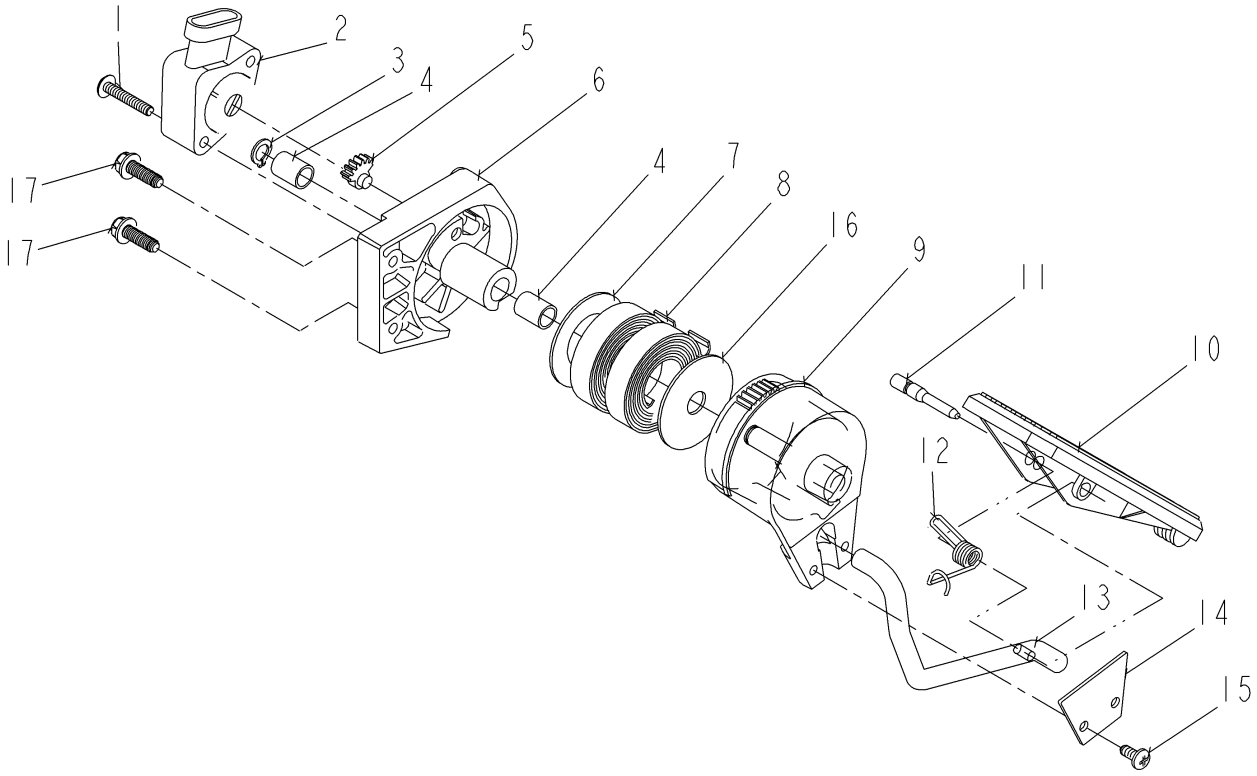

126892-04-K960-.TIF

Copyright © 2007 AGCO Corporation

PEDAL-THROTTLE

ITEM	PART #	QTY	DESCRIPTION	COMMENTS
REF	WR425679	1	SENSOR/THROTTLE	
1	WR139397	2	SCREW	
2	AG330428	1	SENSOR/INTEGRATED	
3	WR139395	1	GRIP RING	
4	WR139394	2	BUSHING	
5	WR139393	1	GEAR/PINION	
6	WR425858	1	BODY/THROTTLE	
7	WR139391	1	WASHER/SPACER	
8	WR139390	2	SPRING/THROTTLE	
9	WR139389	1	HOUSING	
10	AG721301	1	PEDAL GEAR DRIVE 519400	
11	AG722409	1	PIN-GAS PEDAL	
12	AG722408	1	SPRING-GAS PEDAL	
13	WR139387	1	LEVER/PEDAL	
14	WR139386	1	CLAMP/SADDLE	
15	WR139385	2	SCREW	
16	WR139384	1	WASHER/SPACER	
17	AG330427	2	SCREW	

Copyright © 2007 AGCO Corporation

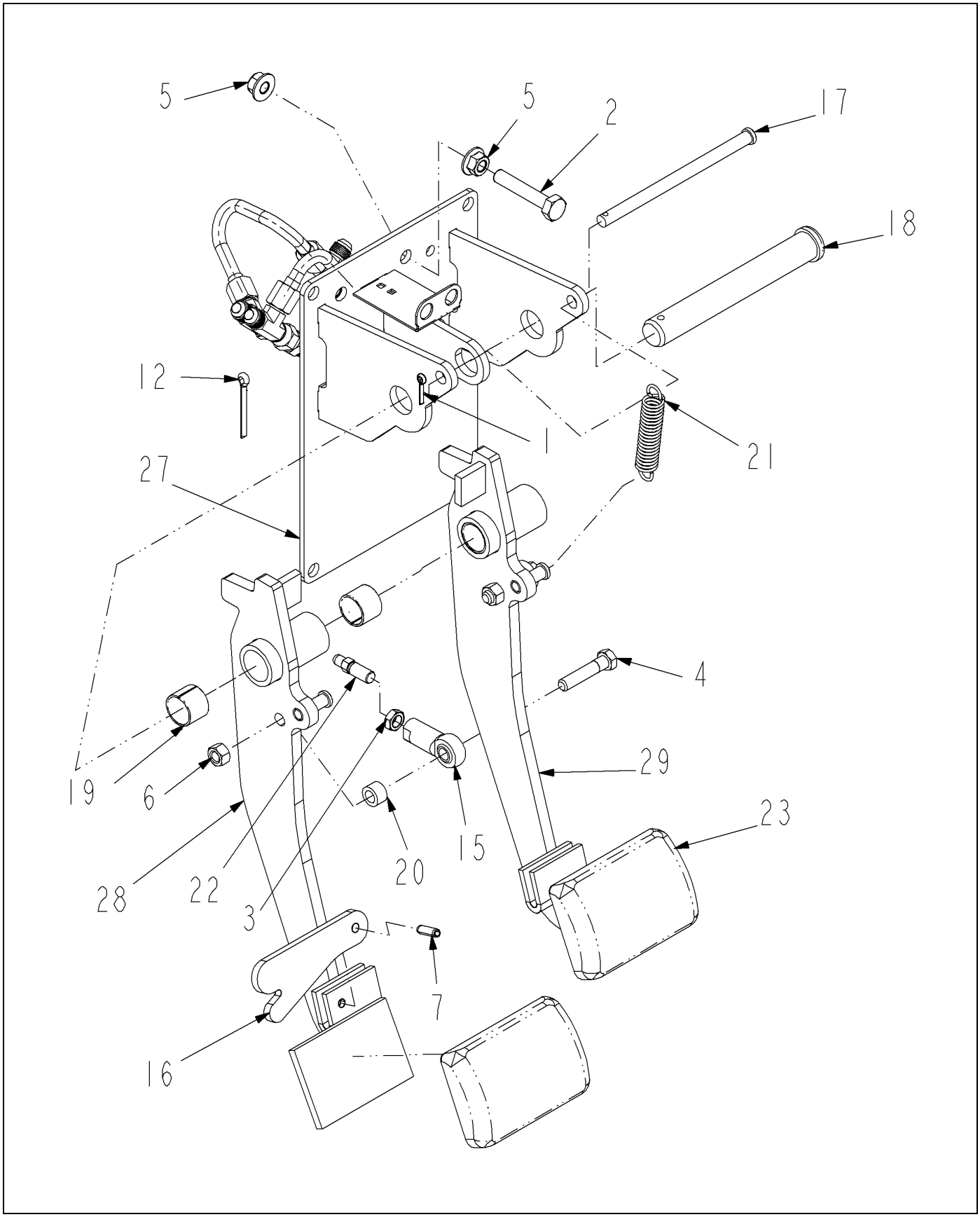

515752D1-01-R415-01.TIF

Copyright © 2007 AGCO Corporation

PEDAL ASSY-4X60 BRAKE

ITEM	PART #	QTY	DESCRIPTION	COMMENTS
1	WR10337	1	PIN-COTTER,1/8 X 3/4	
2	WR55092	2	BOLT-M10-1.5X55,G8.8,FULL THRD	
3	WR55121	2	NUT-JAM, 3/8-24UNF G2	
4	WR55148	2	SCREW-CAP HEX 3/8 NC X	
5	WR55281	4	NUT-FLANGE,M10 X 1.5	
6	WR55353	2	NUT-TOPLOCK, 3/8-16UNC G8	
7	WR55401	1	PIN-STR COILED,1/4 X 3/4	
12	AG559768	1	PIN COTTER 0.18X1.75 ZN	
15	6512954	2	CONNECTOR-ROD,END	
16	6617524	1	ARM-LOCKING	
17	6618395	1	PIN-CLEVIS	
18	6620327	1	PIN-PEDAL	
19	6620331	4	BUSHING	
20	6625282	2	BUSHING	
21	6627054	2	SPRING-EXTENSION	
22	6628003	2	ROD-ACTUATOR,BRAKE	
23	6800419	2	PAD-PEDAL,BRAKE	
27	515755D1	1	SUPPORT WLDMT - PEDAL	
28	520326D1	1	BRAKE PEDAL WLDMT-LH	
29	520327D1	1	BRAKE PEDAL WLDMT-RH	

Copyright © 2007 AGCO Corporation

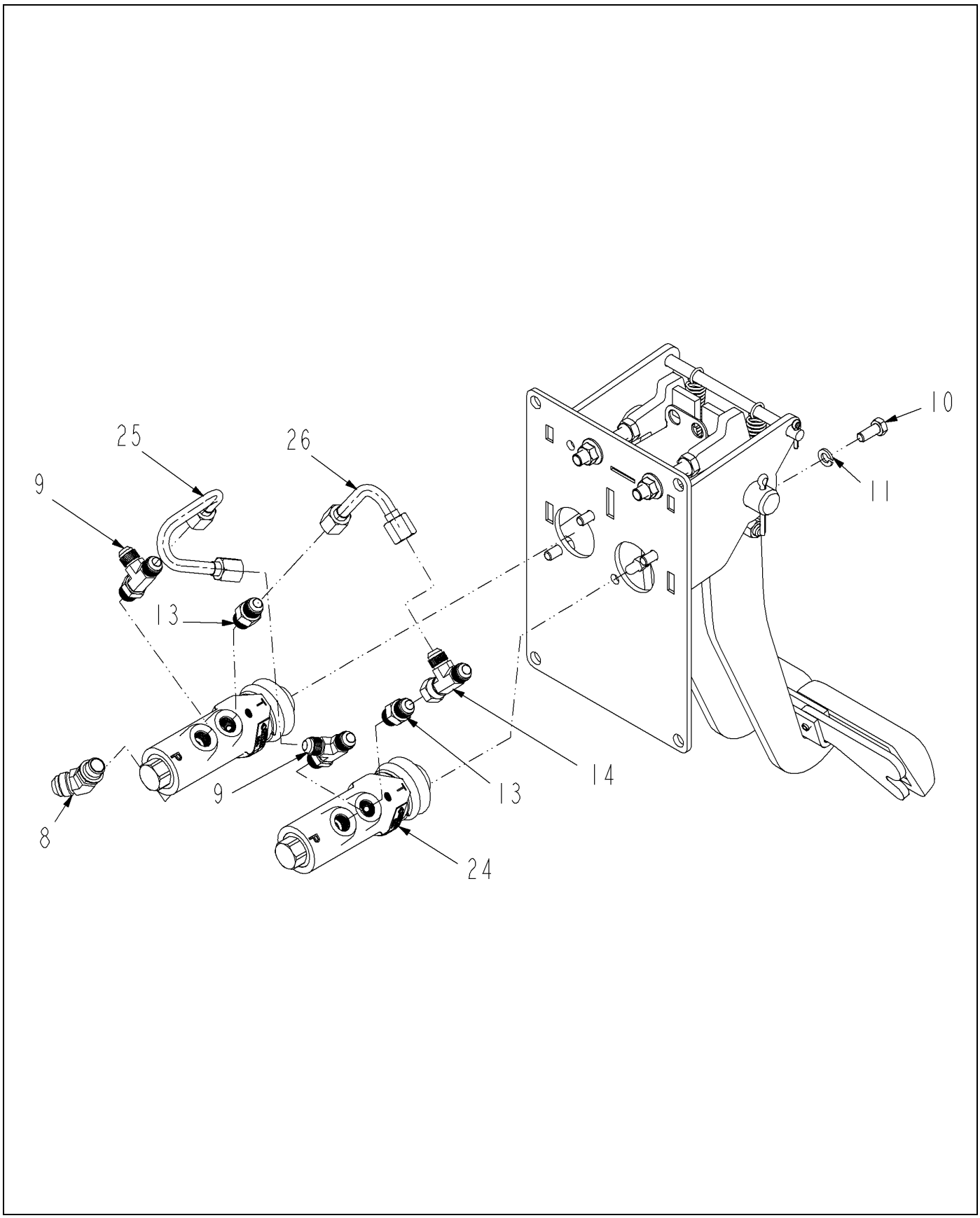

515752D1-01-R415-02.TIF

Copyright © 2007 AGCO Corporation

ITEM	PART #	QTY	DESCRIPTION	COMMENTS
8	AG128112	2	ELBOW-8MJIC 45 X -6MB	
9	AG519123	2	TEE-RUN,STR THD -6	[A]
10	AG550183	4	BOLT 0.31-18NCX 0.75 G5 ZN HHD	
11	AG550205	4	WASHER 0.31 LK ZN REG	
13	AG560693	2	ADAP STR 0.37MO-R X 0.37MJIC	
14	AG561391	1	TEE 0.37FJIC SW X 0.37MJIC(2)	
24	504925D1	2	VALVE-BRAKE MODULATING,	SEE PAGE 7-20
25	513687D1	1	TUBELINE ASM	
26	513688D1	1	TUBELINE ASM	
	FOOTNOTE [A]		AG713166 O-RING	

Copyright © 2007 AGCO Corporation

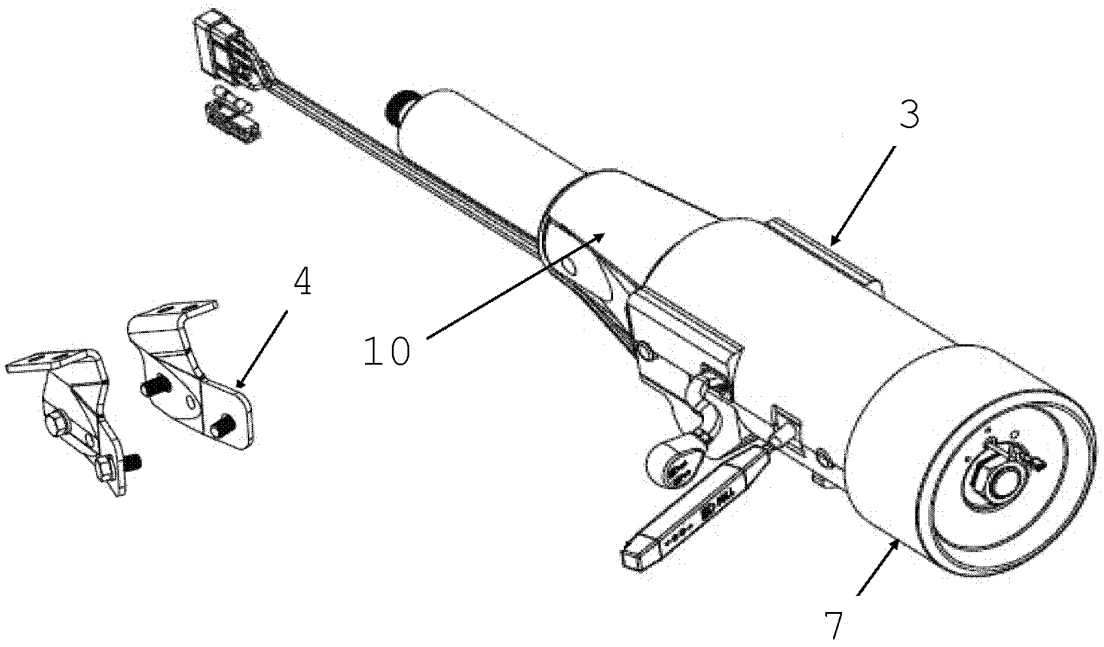

NOTE: ACTUAL COLUMN MAY LOOK DIFFERENT THAN THE ONE SHOWN ABOVE

WR55654-1.tif

Copyright © 2007 AGCO Corporation

STEERING COLUMN#9203218-C

ITEM	PART #	QTY	DESCRIPTION	COMMENTS
3	AG332457	1	UPPER/LOWER COVER KIT	
4	AG332449	1	BRACKET/KIT	
7	AG332452	1	GAPHIDER/KIT	
10	AG332445	1	SHAFT/KIT	

Copyright © 2007 AGCO Corporation

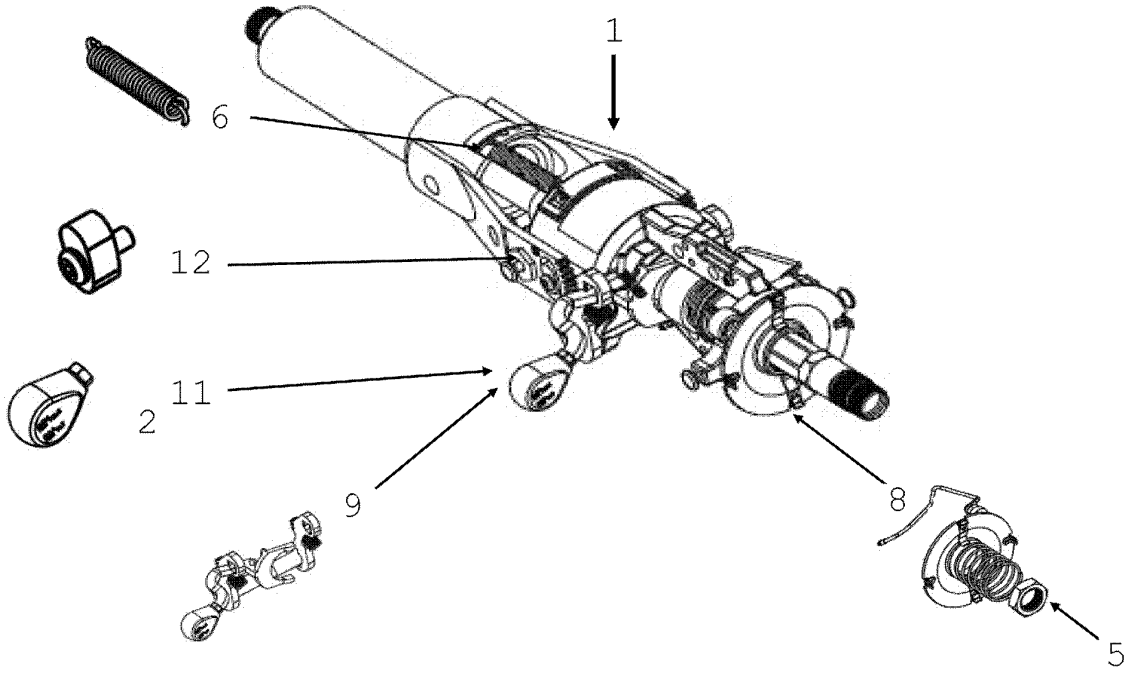

NOTE: ACTUAL SERVICE ASSEMBLY (SA) COLUMN MAY LOOK DIFFERENT THAN THE ONE SHOWN ABOVE

WR55654-2.tif

Copyright © 2007 AGCO Corporation

STEERING COLUMN#9203218-C

ITEM	PART #	QTY	DESCRIPTION	COMMENTS
1	AG332447	1	SERVICE/ASSY	
2	AG332448	1	KNOB/KIT	
5	AG332450	1	NUT	
6	AG332451	1	SPRING	
8	AG332453	1	HORN/BRUSH KIT	
9	AG332454	1	ROD/PAWL KIT	
11	WR425848	1	KNOB/TILT,LEVER KIT	
12	AG332456	1	TILT/STOP KIT	

Copyright © 2007 AGCO Corporation

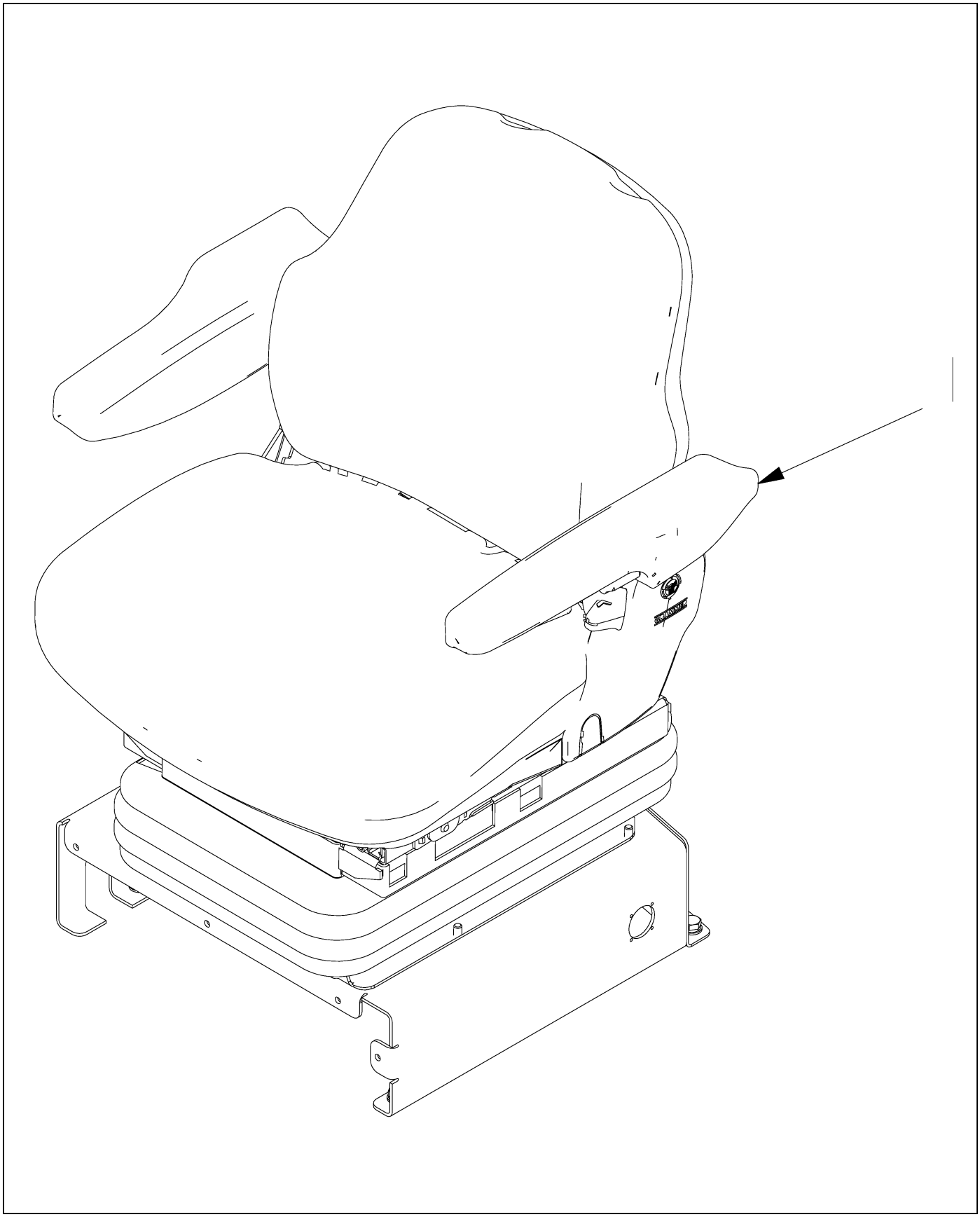

506870D1-01-M947-.TIF

Copyright © 2007 AGCO Corporation

SEAT GP-BASIC

ITEM	PART #	QTY	DESCRIPTION	COMMENTS
1	507203D1	1	SEAT INSTL	SEE PAGE 8-7

Copyright © 2007 AGCO Corporation

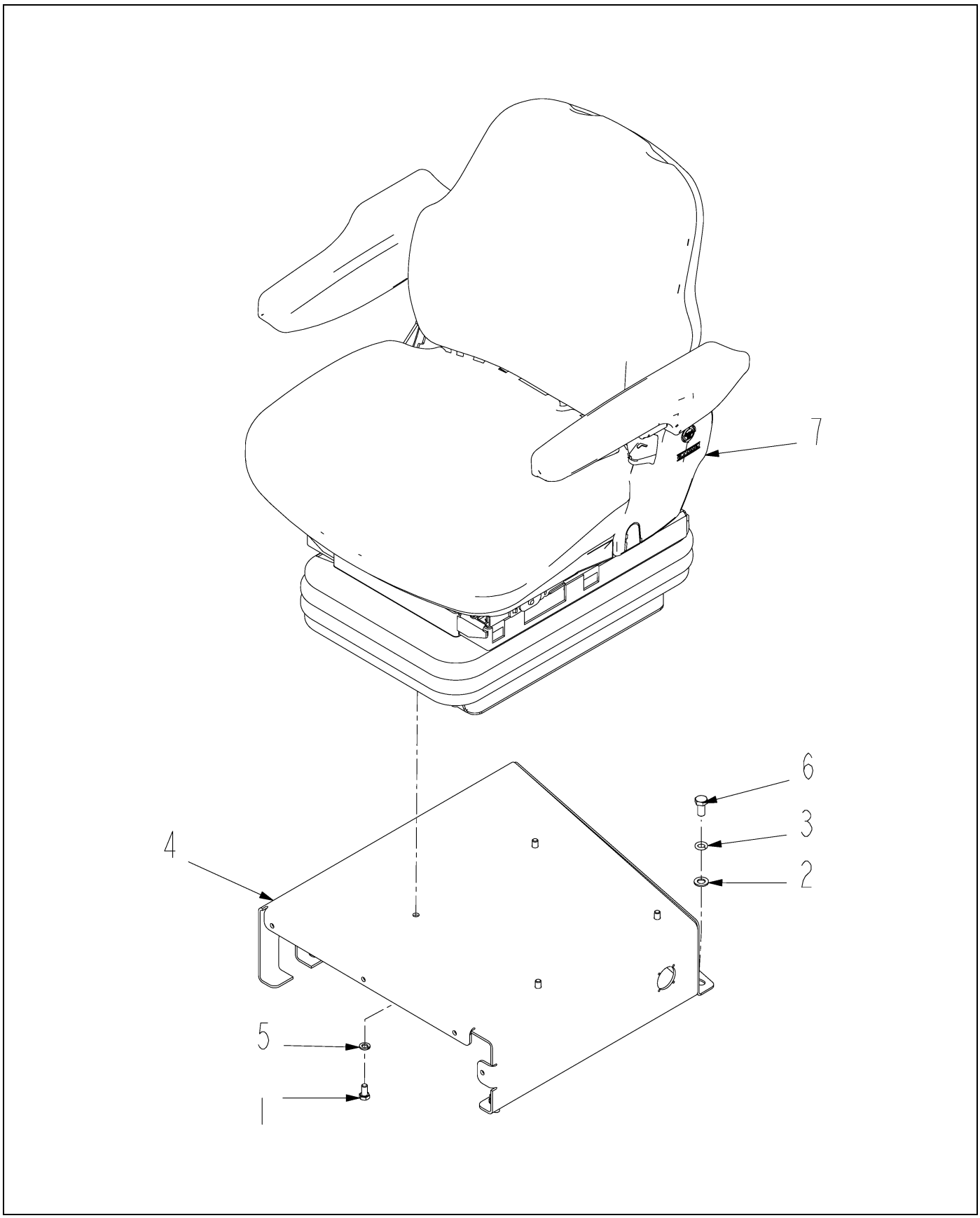

507203D1-02-N230-.TIF

Copyright © 2007 AGCO Corporation

ITEM	PART #	QTY	DESCRIPTION	COMMENTS
1	WR25752	4	SCREW-CAP HEX M8 X 16,	
2	WR55075	4	WASHER-FL,M10,ZN,REG	
3	WR55106	4	WASHER-LOCK SPRING,10 MM	
5	WR129453	1	MOUNT WLDMT-SEAT	
6	AG562463	4	BOLT M10-1.50X 20MM G8.8 ZN HH	
7	507205D1	1	SEAT GP-MECH SUSPENSION	SEE PAGE 8-8

Copyright © 2007 AGCO Corporation

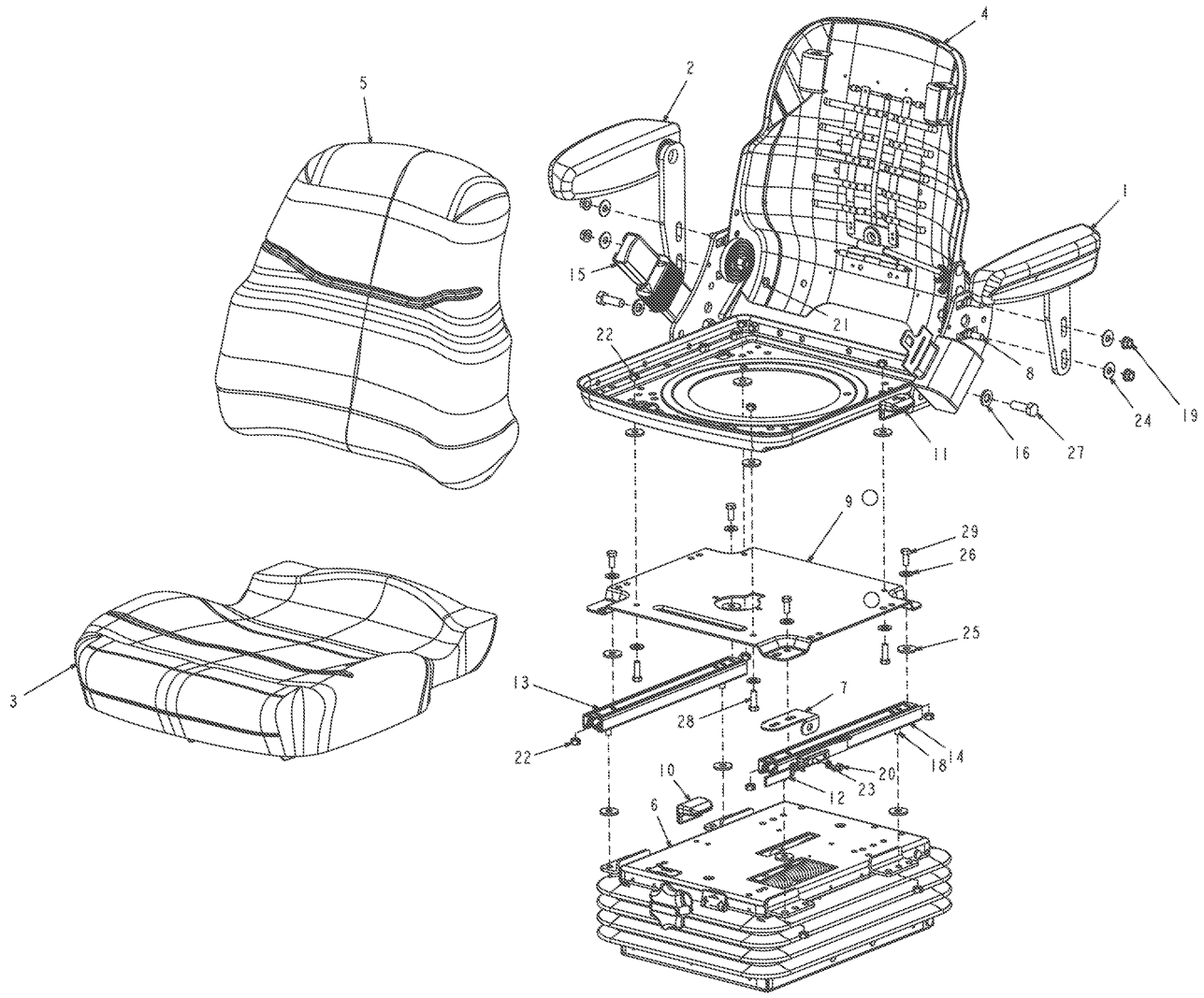

507205D1-02-N445-.TIF

Copyright © 2007 AGCO Corporation

SEAT GP-MECH SUSPENSION

ITEM	PART #	QTY	DESCRIPTION	COMMENTS
1	513832D1	1	KIT-ARM REST LH	
2	513831D1	1	KIT-ARM REST RH	
3	513830D1	1	KIT-SEAT CUSHION	
4	513829D1	1	KIT-SEAT TOP SST	
5	508238D1	1	KIT-CUSHION,BACK	
6	513833D1	1	KIT-MECHANICAL SUSPENSION	
7	508262D1	1	KIT-SERVICE,SLIDES	
8	513828D1	1	KIT-SHOULDER BOLT	
10	508262D1	1	KIT-SERVICE,SLIDES	
11	197-4520	1	KIT-RECLINER AS.	
12	508262D1	1	KIT-SERVICE,SLIDES	
13	508262D1	1	KIT-SERVICE,SLIDES	
14	508262D1	1	KIT-SERVICE,SLIDES	
15	197-4527	1	KIT - SEAT BELT	

Copyright © 2007 AGCO Corporation

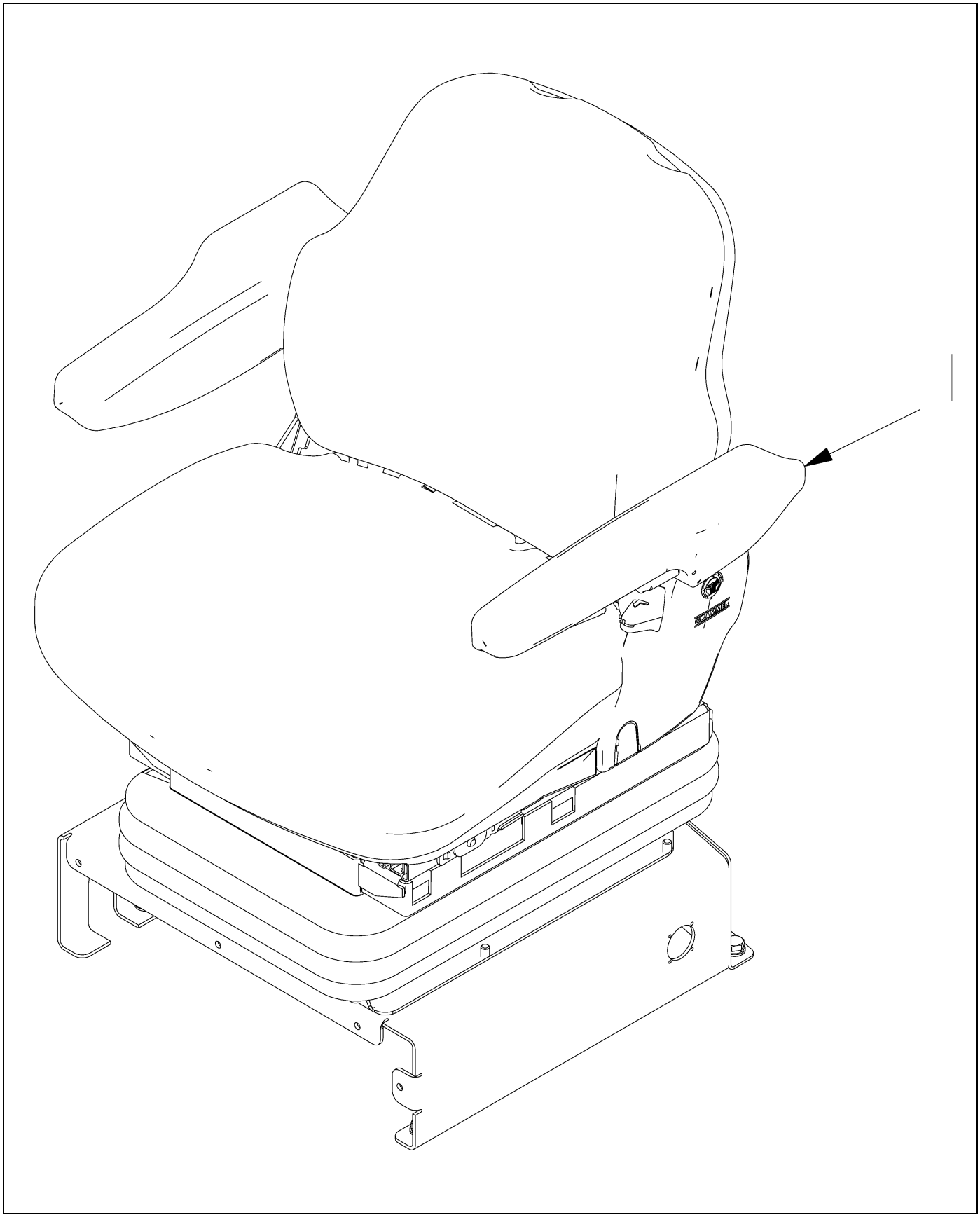

506871D1-01-M947-.TIF

Copyright © 2007 AGCO Corporation

SEAT GP-DELUXE

ITEM	PART #	QTY	DESCRIPTION	COMMENTS
1	507204D1	1	SEAT INSTL-DELUX, AUTO TRANS	SEE PAGE 8-10

Copyright © 2007 AGCO Corporation

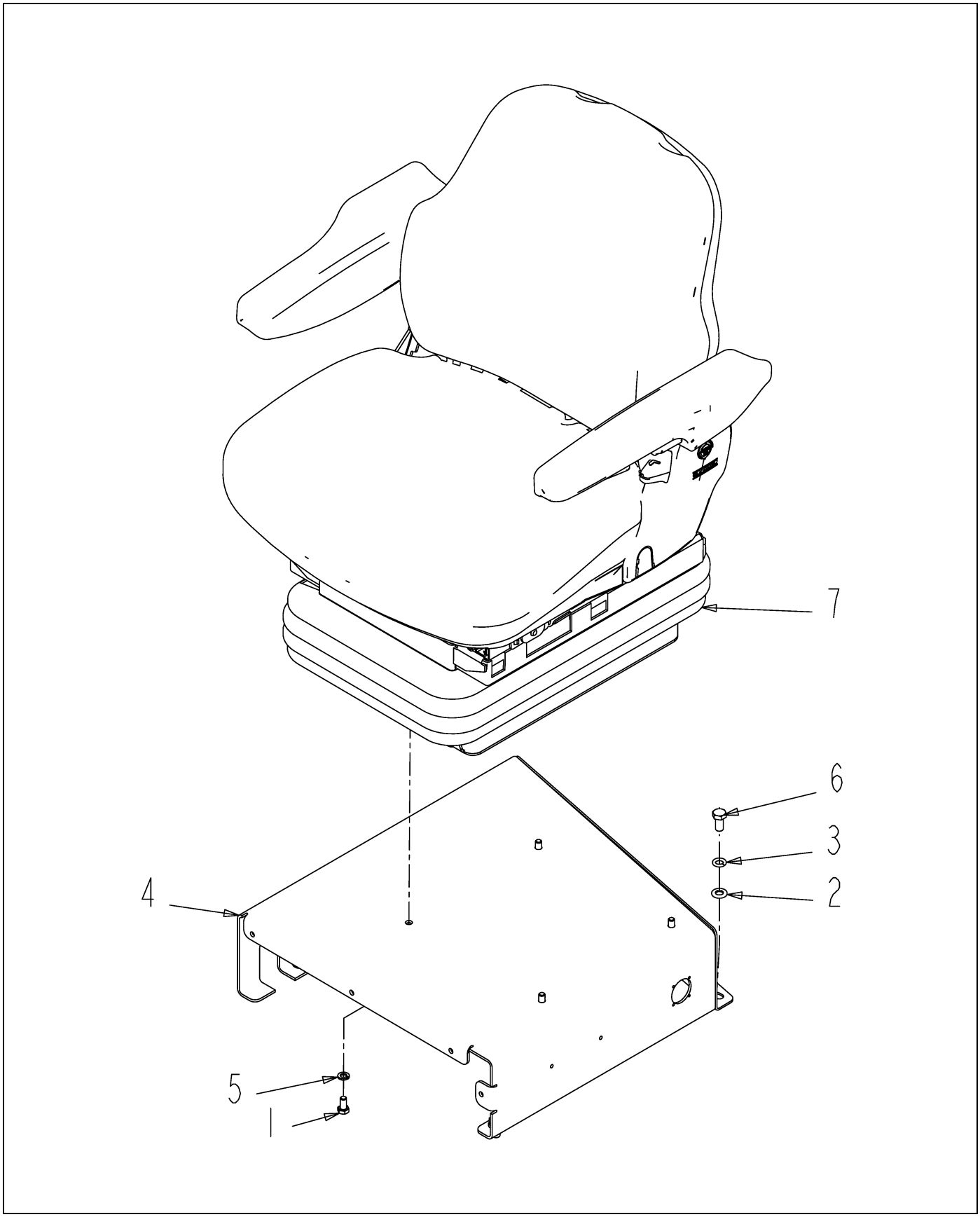

507204D1-04-R178-01.TIF

Copyright © 2007 AGCO Corporation

SEAT INSTL-DELUX, AUTO TRANS

ITEM	PART #	QTY	DESCRIPTION	COMMENTS
1	WR25752	4	SCREW-CAP HEX M8 X 16,	
2	WR55075	4	WASHER-FL,M10,ZN,REG	
3	WR55106	4	WASHER-LOCK SPRING,10 MM	
5	AG561679	4	WASHER LOCK M8 ZN	
6	AG562463	4	BOLT M10-1.50X 20MM G8.8 ZN HH	
7	507206D1	1	SEAT GP-AIR SUSPENSION	SEE PAGE 8-12

Copyright © 2007 AGCO Corporation

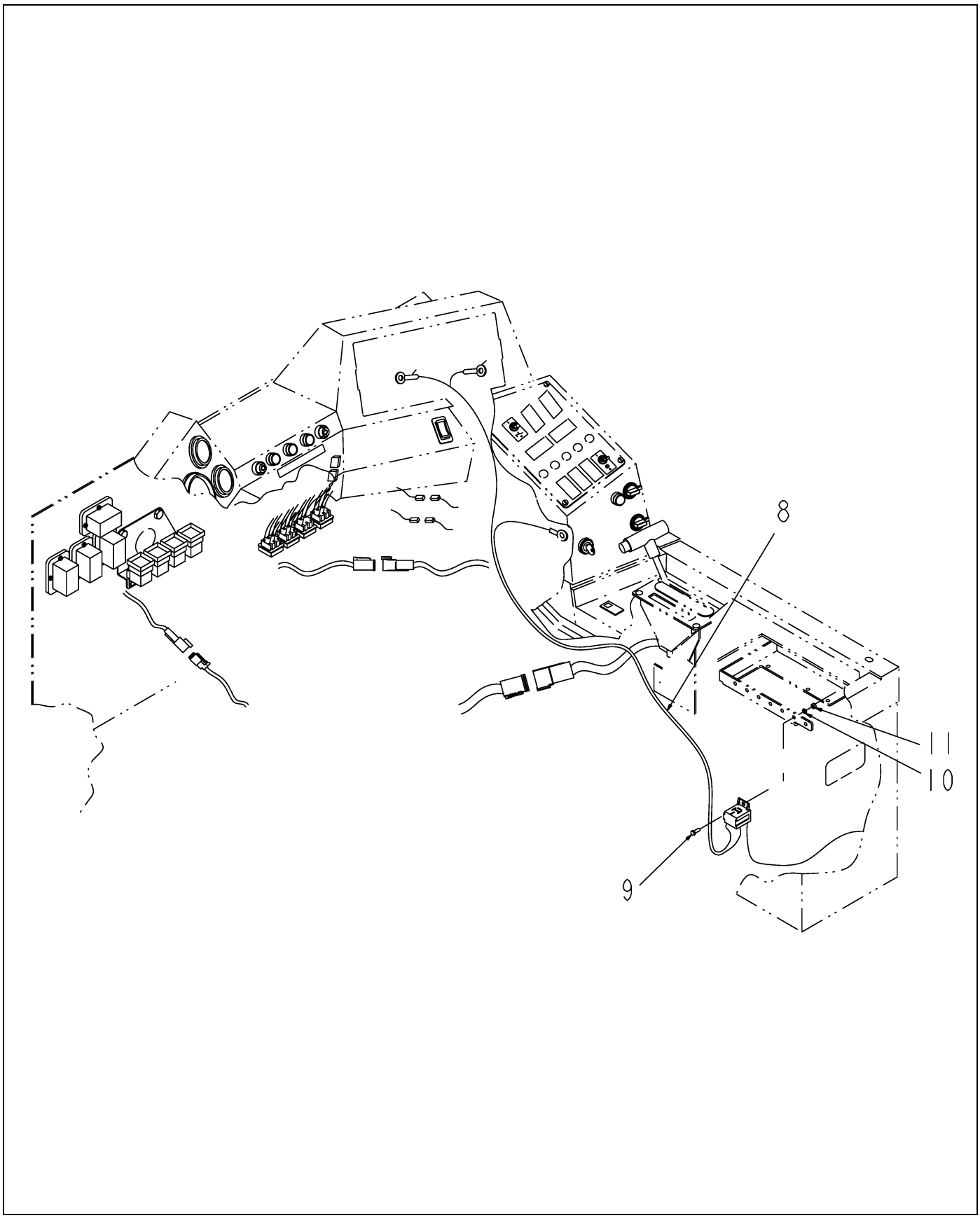

507204D1-04-R178-02.TIF

Copyright © 2007 AGCO Corporation

SEAT INSTL-DELUX, AUTO TRANS

ITEM	PART #	QTY	DESCRIPTION	COMMENTS
8	511970D1	1	HARNESS-AIR RIDE SEAT	
9	WR55026	2	SCREW-CAP HEX M5 X 12	
10	WR55103	2	WASHER-LOCK SPRING,5MM ID	
11	WR55071	2	NUT-HEX,M5 X .8 CL10	

Copyright © 2007 AGCO Corporation

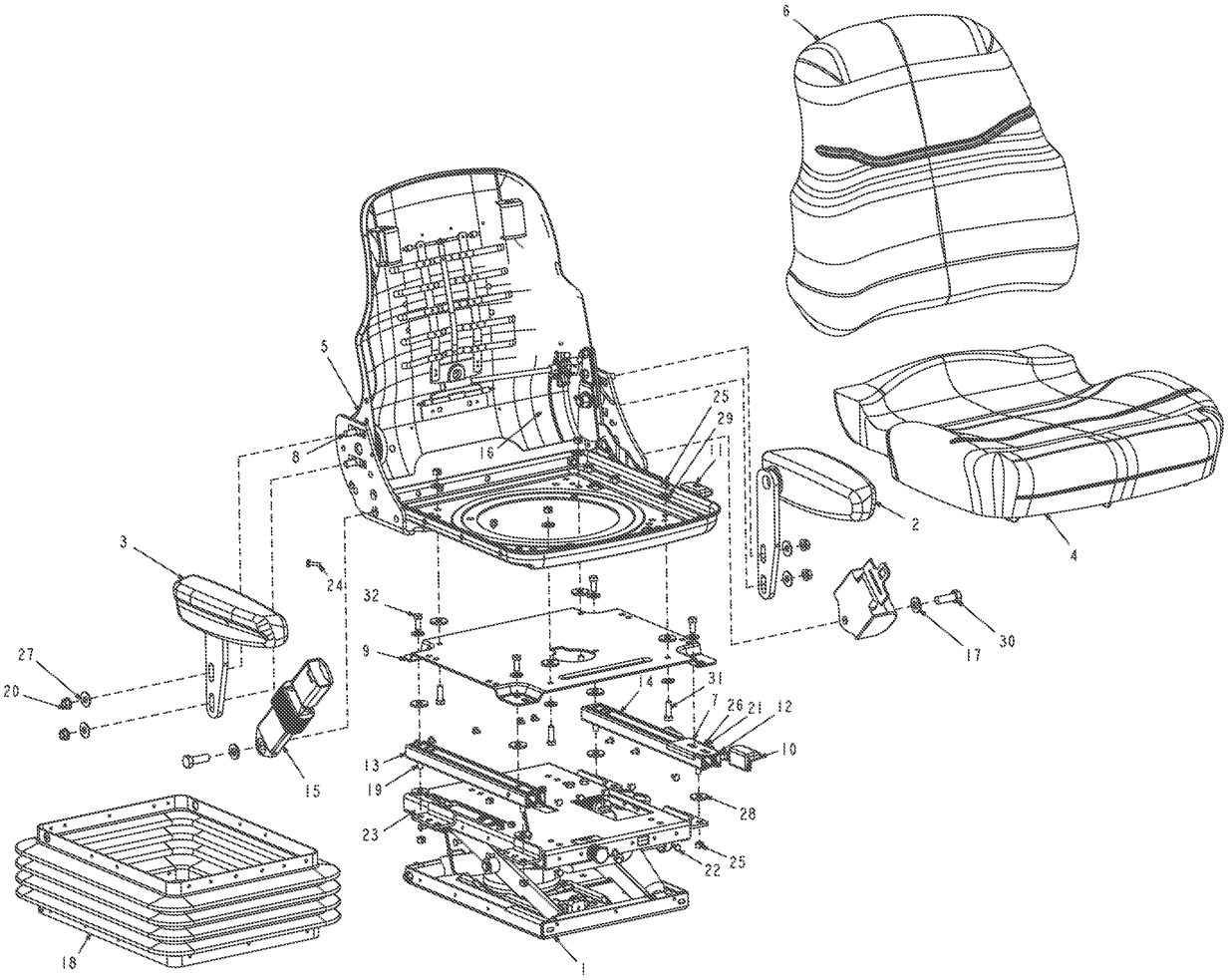

507206D1-02-N445-02.TIF

Copyright © 2007 AGCO Corporation

SEAT GP-AIR SUSPENSION

ITEM	PART #	QTY	DESCRIPTION	COMMENTS
1	513834D1	1	KIT-AIR SUSPENSION	
2	513832D1	1	KIT-ARM REST LH	
3	513831D1	1	KIT-ARM REST RH	
4	513830D1	1	KIT-SEAT CUSHION	
5	513829D1	1	KIT-SEAT TOP SST	
6	508238D1	1	KIT-CUSHION,BACK	
7	508262D1	1	KIT-SERVICE,SLIDES	
8	513828D1	1	KIT-SHOULDER BOLT	
10	508262D1	1	KIT-SERVICE,SLIDES	
11	197-4521	1	KIT-RECLINER KNOB	
13	508262D1	1	KIT-SERVICE,SLIDES	
14	508262D1	1	KIT-SERVICE,SLIDES	
15	197-4527	1	KIT - SEAT BELT	
18	508256D1	1	KIT-BOOT, SUSPENSION	
19	508262D1	1	KIT-SERVICE,SLIDES	
22	508263D1	1	KIT-SERVICE,BOOT,LP AIR	
23	508263D1	1	KIT-SERVICE,BOOT,LP AIR	

Copyright © 2007 AGCO Corporation

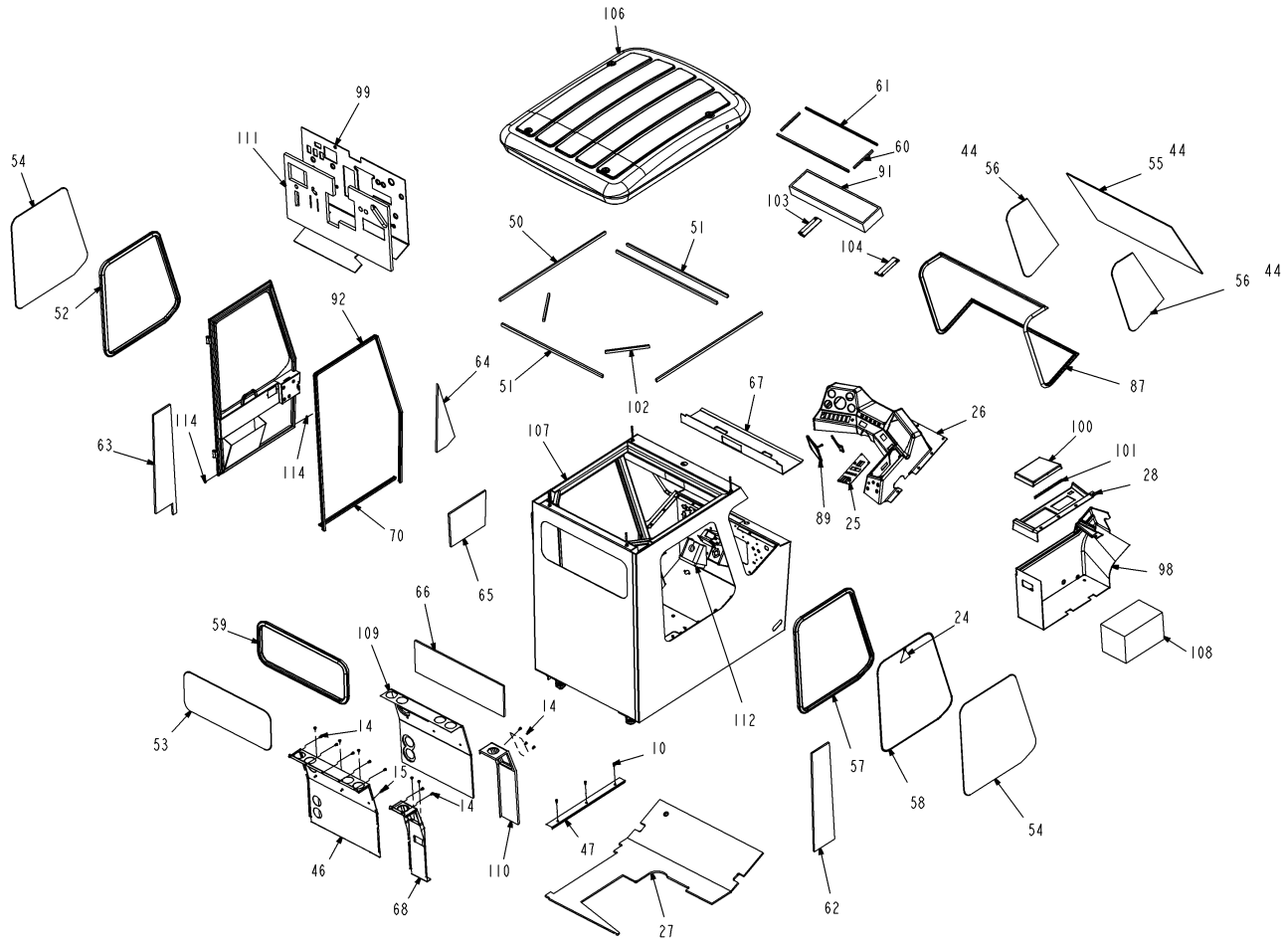

507031D1-04-R182-01.TIF

Copyright © 2007 AGCO Corporation

ITEM	PART #	QTY	DESCRIPTION	COMMENTS
10	WR55187	3	SCREW-BUTTON HEAD,0.25NCX.62	
14	WR55254	11	SCREW-HEX FLG,.25NCX.50 GR5	
15	WR55255	3	SCREW-HEX FLG,.25NCX.625 GR5	
24	WR120749	1	TAG-EXIT	
25	WR129357	1	PLATE-SWITCH,SC	
26	AG129360	1	PANEL-DASH,4000 SC	
27	WR131429	1	FLOORMAT	
28	WR132441	1	PANEL-DASH,RH	
44	6555350	-	ADHESIVE-RUBBER	
46	6595112	1	PANEL-ACCESS,LH	
47	6597317	1	RETAINER-FLOORMAT	
50	6626597	2	FOAM-CAB TOP	
51	6626598	3	FOAM-CAB TOP	
52	6626766	1	SEAL, DOOR WINDOW	
53	6626767	1	WINDOW-REAR	
54	6626768	2	WINDOW-SIDE	
55	6626769	1	WINDSHIELD-FRONT	
56	6626770	2	WINDSHIELD-SIDE	
57	6626771	1	SEAL-SIDE,WINDOW	
58	6626772	1	CORD-WINDOW	
59	6626773	1	SEAL-WINDOW,REAR	
60	6626774	2	FOAM-FILTER	
61	6626775	2	FOAM-FILTER	
62	6626776	1	FOAM-REAR,RH	
63	6626777	1	FOAM-REAR,LH	
64	6626778	1	FOAM-FRONT,LH	
65	6626780	1	FOAM-DOOR	
66	6626781	1	FOAM-REAR	
67	6626782	1	HEADLINER	
68	6626840	1	PANEL-ACCESS,W/A	
70	6627528	1	SEAL-TRIM	
87	6661811	1	SEAL-WINDSHIELD	
89	6663955	1	MIRROR	
91	6671706	1	FILTER-CARBON	
92	6800800	1	SEAL-BULK	
98	6801663	1	DASH-BOTTOM,RH	
99	6801779	1	INSULATION-FIREWALL	
100	6802466	1	COVER-FUSE	
101	6802467	1	HINGE	
102	506590D1	2	FOAM-CAB TOP	
103	506591D1	1	BRKT-AIR FILTER,LH,CAB	
104	506592D1	1	BRKT-AIR FILTER,RH,CAB	
106	507169D1	1	CAB TOP ASSY-CHAL	SEE PAGE 8-17
107	508450D1	1	CAB WLDMT-4000 CHAL	
108	508541D1	1	PANEL, RH CONSOLE FOAM FILLER	
109	508548D1	1	PANEL, HVAC BACK PANEL	
110	508549D1	1	PANEL, HVAC CONSOLE	
111	508550D1	1	PANEL, FIREWALL UNDER DASH	
112	508551D1	1	PANEL, STEERING COLUMN	
114	515288D1	2	HOLE PLUG-PLASTIC, .31	

Copyright © 2007 AGCO Corporation

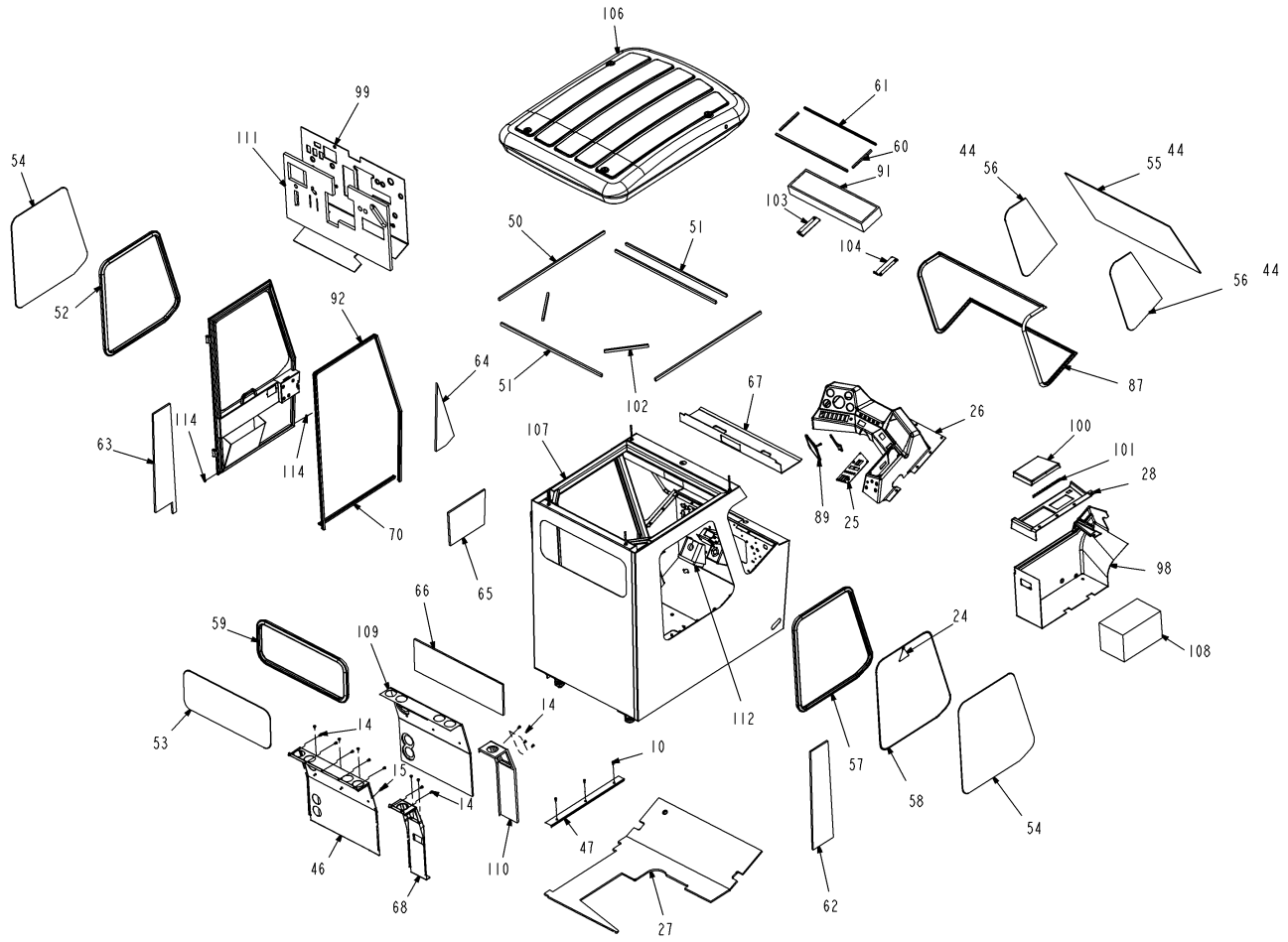

507031D1-04-R182-01.TIF

Copyright © 2007 AGCO Corporation

ITEM	PART #	QTY	DESCRIPTION	COMMENTS
1	WR26513	1	STRIKER BOLT ASSEMBLY	
4	WR55091	4	SCREW-CAP HEX M4 X 16	
6	WR55102	4	WASHER-LOCK SPRING,4MM ID	
12	WR55249	4	NUT-LOCK,M4 G4D	
18	WR55301	3	NUT-FLANGE,M10 X 1.5,PREV	
19	WR55308	4	NUT-ACORN,5/16 NC	
23	WR55546	3	SCREW-CAP HEX M10 X 110	
33	AG550566	1	NUT 0.43-14NC HEX ZN REG	
36	AG561617	1	WASHER 0.50 FL ZN SAE TYPE-A	
37	AG561679	2	WASHER LOCK M8 ZN	
49	6626535	1	BRACE-DASH	
71	6627886	1	COVER	
113	511921D1	1	STRIKER-GUARD	

Copyright © 2007 AGCO Corporation

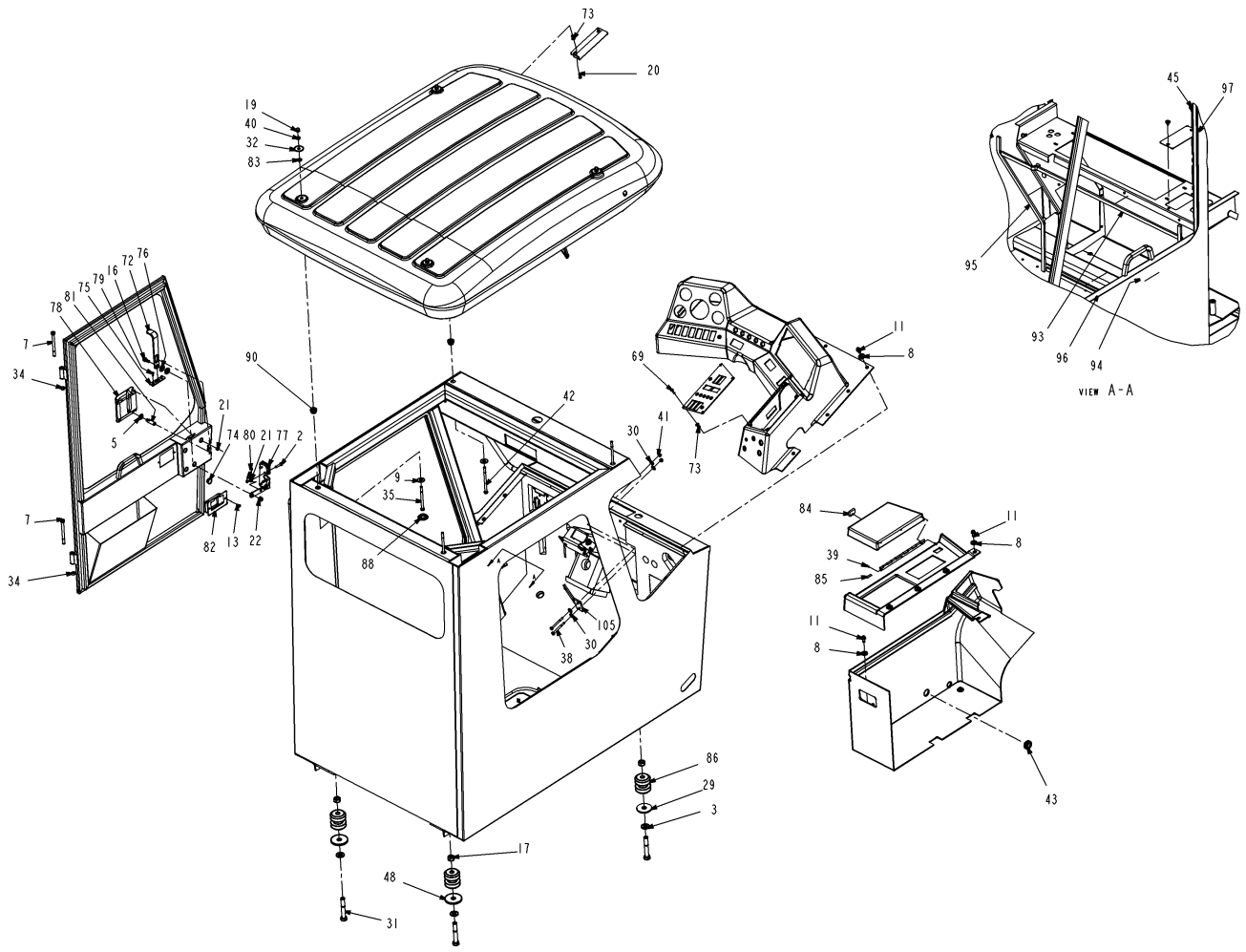

507031D1-04-R182-02.TIF

Copyright © 2007 AGCO Corporation

ITEM	PART #	QTY	DESCRIPTION	COMMENTS
2	WR35153	4	SCREW-MACH BTN SOCHD	
3	WR50857	4	WASHER-FLAT,HRD 5/8	
5	WR55101	1	WASHER-LOCK INT TOOTH,	
7	WR55149	2	BOLT 3/8-16X114 ZNDI HHD 10.9	
8	WR55157	17	WASHER-FLAT,8MM ID,	
9	WR55158	4	WASHER-FLAT,10MM ID,	
11	WR55190	17	SCREW-CAP HEX M8 X 20,	
13	WR55251	2	SCREW-TAP,#6 X 3/4,OVAL	
16	WR55266	1	SCREW-SH HEX 3/8 NC X	
17	WR55274	4	NUT-LK,M16X2.0,PREV TORQ,ZY	
20	WR55313	4	SCREW-MACH HEX,#10-32NF X	
21	WR55351	5	NUT-TOPLOCK, 1/4-20UNC G8	
22	WR55352	1	NUT-TOPLOCK,5/16-18UNC G8	
29	WR132672	2	WASHER-FLAT 2.50 OD X.69IDX.25	
30	AG515121	4	WASHER 0.25 FL SS REG TYPE-B	
31	AG517438	4	BOLT HHD M16-2X100MM 10.9 ZN	
32	AG518096	4	WASHER FENDER .31X1.50 OD ZN	
34	AG557676	2	NUT 0.37-16NC HEX ZN C-LK	
35	AG561067	2	BOLT 0.31-18NCX 4.50 G5 ZN HHD	
38	AG561770	2	BOLT 0.25-20NCX 2.75 G5 ZN HHD	
39	AG561884	6	RIVET POP 0.12X0.25 DOME-HD ST	
40	AG562171	4	NUT 0.31-18NC HEX ZN JAM G5	
41	AG604216	2	NUT 0.25-20NC HEX ZN REG NY	
42	AG704467	2	BOLT 0.31-18NCX 5.00 G5 ZN HHD	
43	1023368	1	GROMMET	
45	6589675	7	SCREW-TR HD,TAPPING	
48	6626510	2	WASHER	
69	6627005	4	SCREW-NYLON	
72	6628352	1	ANGLE-LATCH	
73	6630140	8	NUT-JACK	
74	6648354	4	PLUG-HOLE	
75	6648413	1	BUSHING-DOOR	
76	6648414	2	WASHER-NYLON	
77	6648417	1	LATCH ASSY-RH	
78	6648421	1	LATCH-PADDLE	
79	6648422	2	SCREW-SELF TAPPING	
80	6654147	1	SPRING	
81	6654154	1	BOLT-STRIKER	
82	6654785	1	ASHTRAY	
83	6661567	4	WASHER-NEOPRENE	
84	6661746	1	CATCH-MAGNETIC	
85	6661747	1	STRIKER-STEEL	
86	6661801	4	MOUNT-CAB	
88	6662831	2	PLUG-BUTTON	
90	6669666	4	MOUNT-RUBBER	
93	6800987	1	FOAM-STRIP	
94	6800988	1	FOAM-STRIP	
95	6800989	1	FOAM-STRIP	
96	6800991	1	FOAM-STRIP	
97	6801034	1	PLATE	

Copyright © 2007 AGCO Corporation

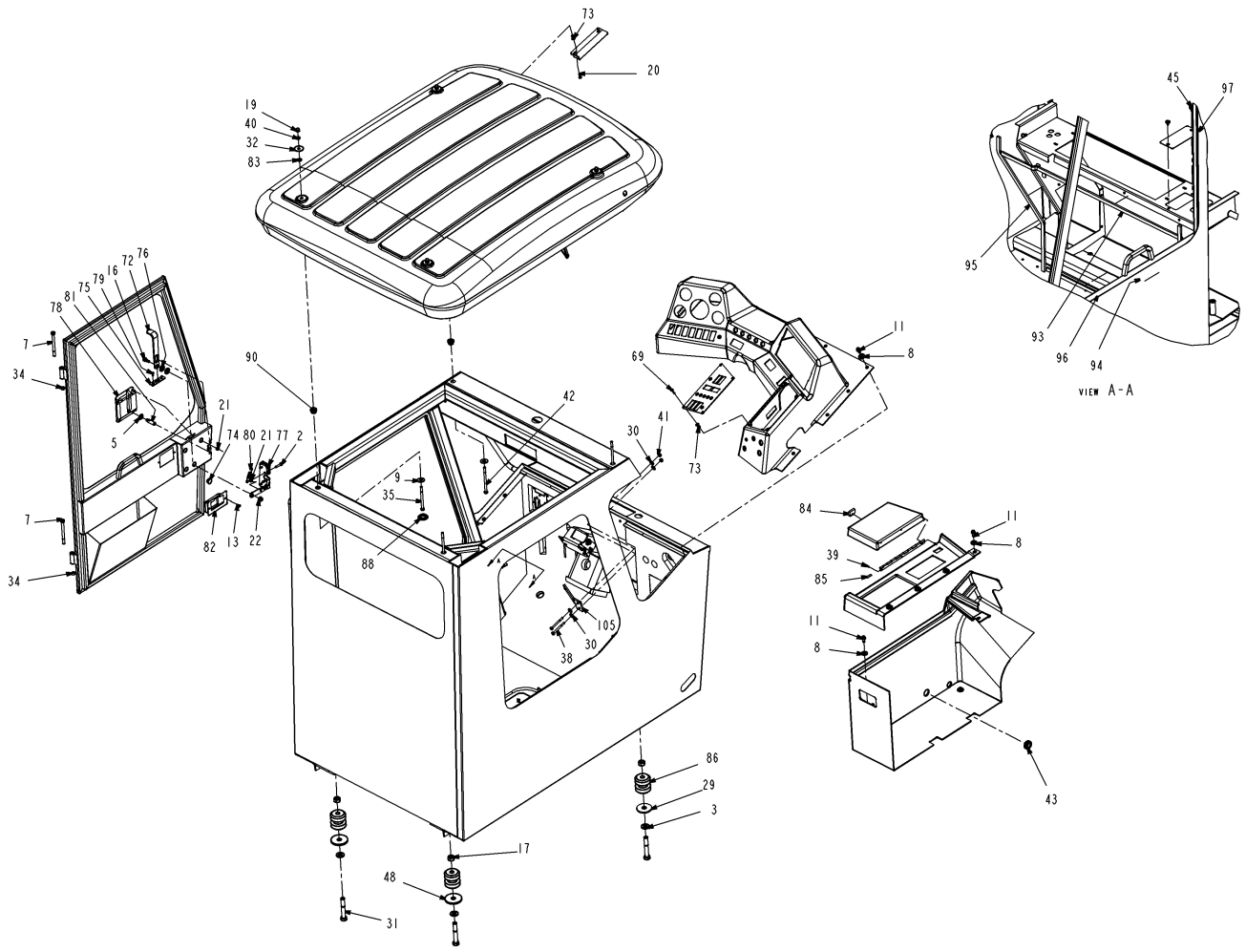

507031D1-04-R182-02.TIF

Copyright © 2007 AGCO Corporation

ITEM	PART #	QTY	DESCRIPTION	COMMENTS
105	506946D1	1	BRKT-MIRROR	

Copyright © 2007 AGCO Corporation

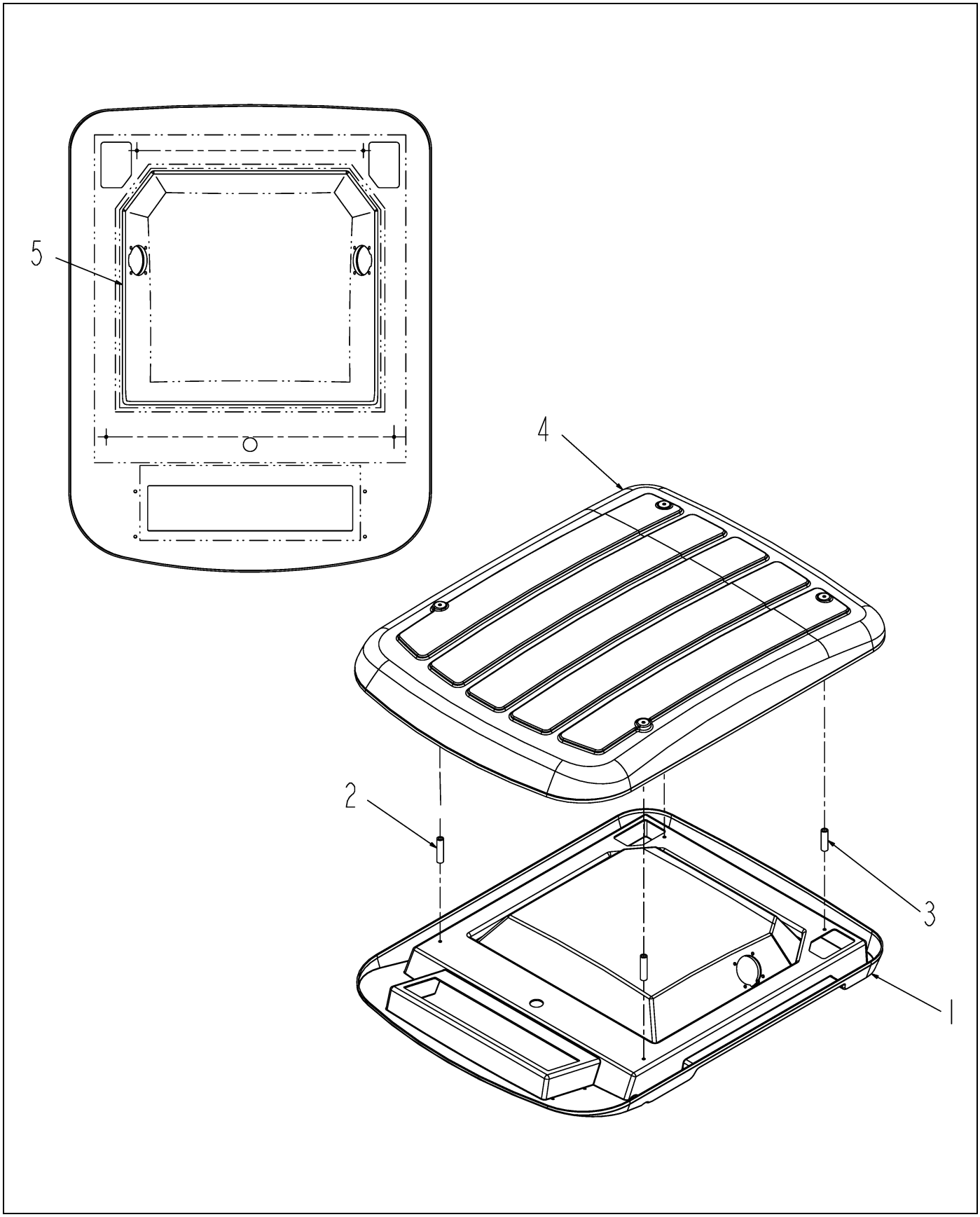

507169D1-01-M514.TIF

Copyright © 2007 AGCO Corporation

CAB TOP ASSY-CHAL

ITEM	PART #	QTY	DESCRIPTION	COMMENTS
1	504732D1	1	CAB TOP-LOWER	
2	504733D1	2	SPACER-CAB TOP,FRONT	
3	504734D1	2	SPACER-CAB TOP,REAR	
4	507170D1	1	CAB TOP-UPPER,CHAL	
5	508447D1	1	HEADLINER-CAB TOP	

Copyright © 2007 AGCO Corporation

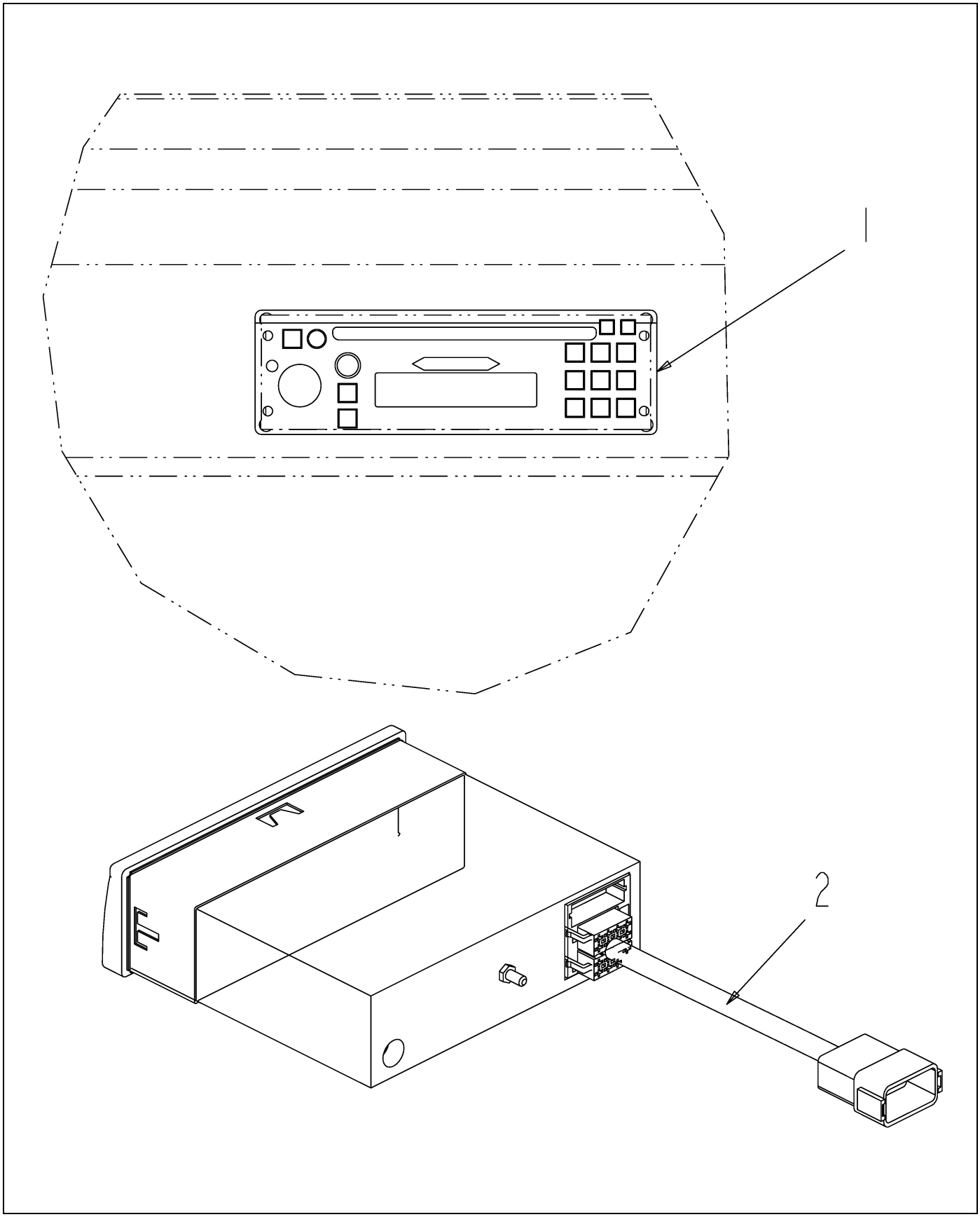

514378D1-01-N899-.TIF

Copyright © 2007 AGCO Corporation

KIT-RADIO,XM

ITEM	PART #	QTY	DESCRIPTION	COMMENTS
1	509630D1	1	RADIO-CD (XM)	[A]
2	514906D1	1	HARNESS AS.-RADIO ADAPTER	
	FOOTNOTE [A]		S/N ..Txx1001	
	FOOTNOTE		S/N ..Txx1001	

Copyright © 2007 AGCO Corporation

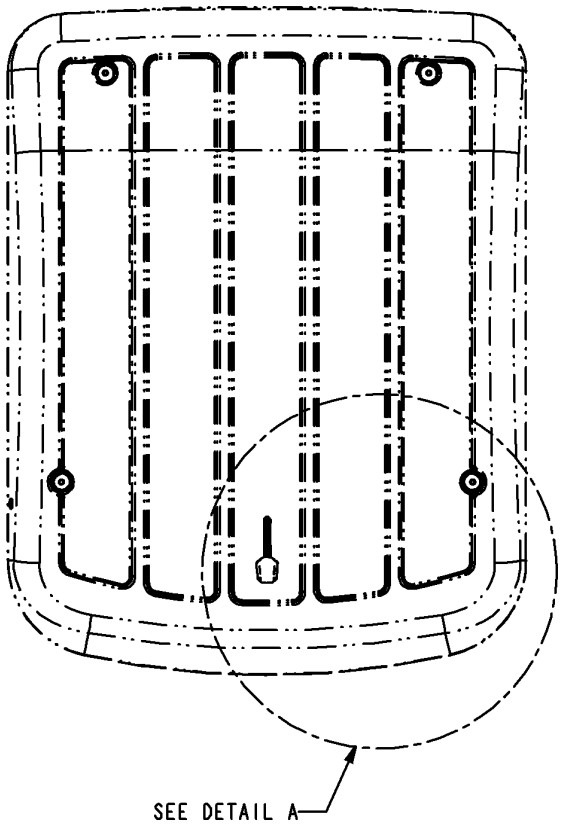

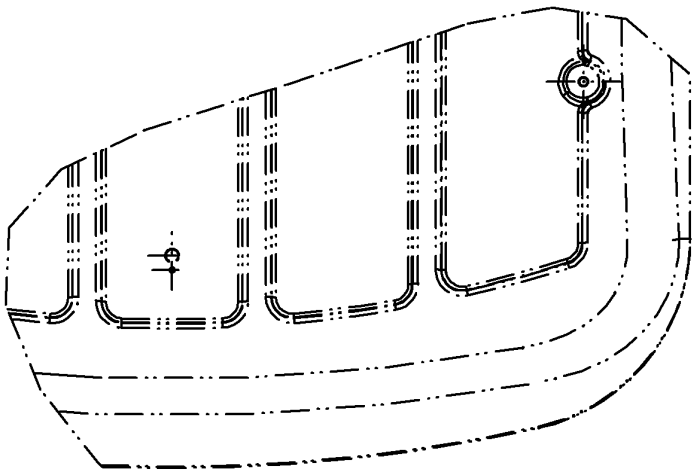

DETAIL A

514380D1-01-N899-.TIF

Copyright © 2007 AGCO Corporation

INSTL-ANTENNA,SAT

ITEM	PART #	QTY	DESCRIPTION	COMMENTS
1	509637D1	1	SATELLITE-RADIO ANTENNA	
	FOOTNOTE		S/N ..Txx1001	

Copyright © 2007 AGCO Corporation

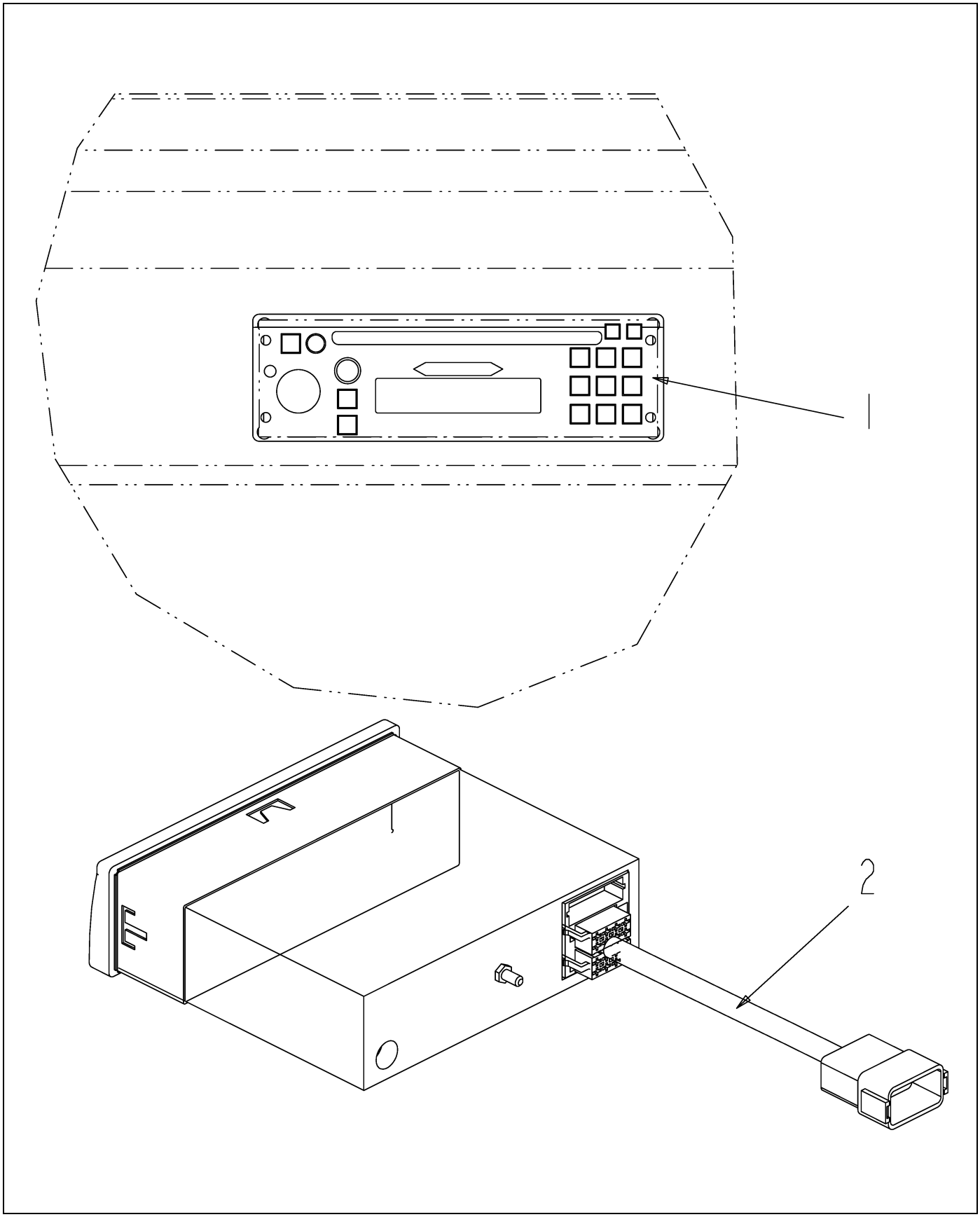

514379D1-01-N899-.TIF

Copyright © 2007 AGCO Corporation

KIT-RADIO,SIRIUS

ITEM	PART #	QTY	DESCRIPTION	COMMENTS
1	509631D1	1	RADIO-CD (SIRIUS)	
2	514906D1	1	HARNESS AS.-RADIO ADAPTER	

Copyright © 2007 AGCO Corporation

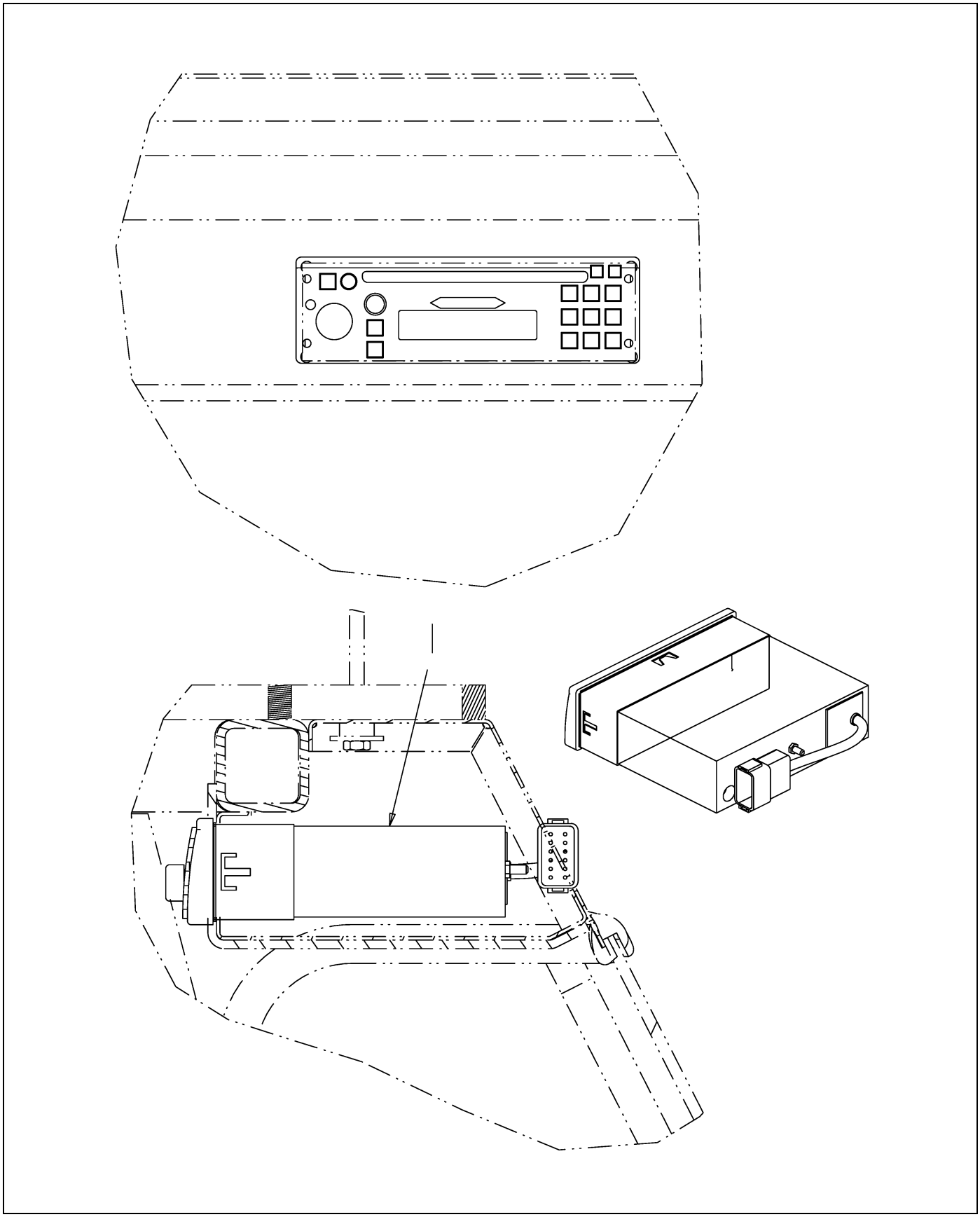

514908D1-01-N899-.TIF

Copyright © 2007 AGCO Corporation

KIT-RADIO AM/FM STEREO W/CD

ITEM	PART #	QTY	DESCRIPTION	COMMENTS
1	514913D1	1	RADIO-AM/FM STEREO W/CD	

Copyright © 2007 AGCO Corporation

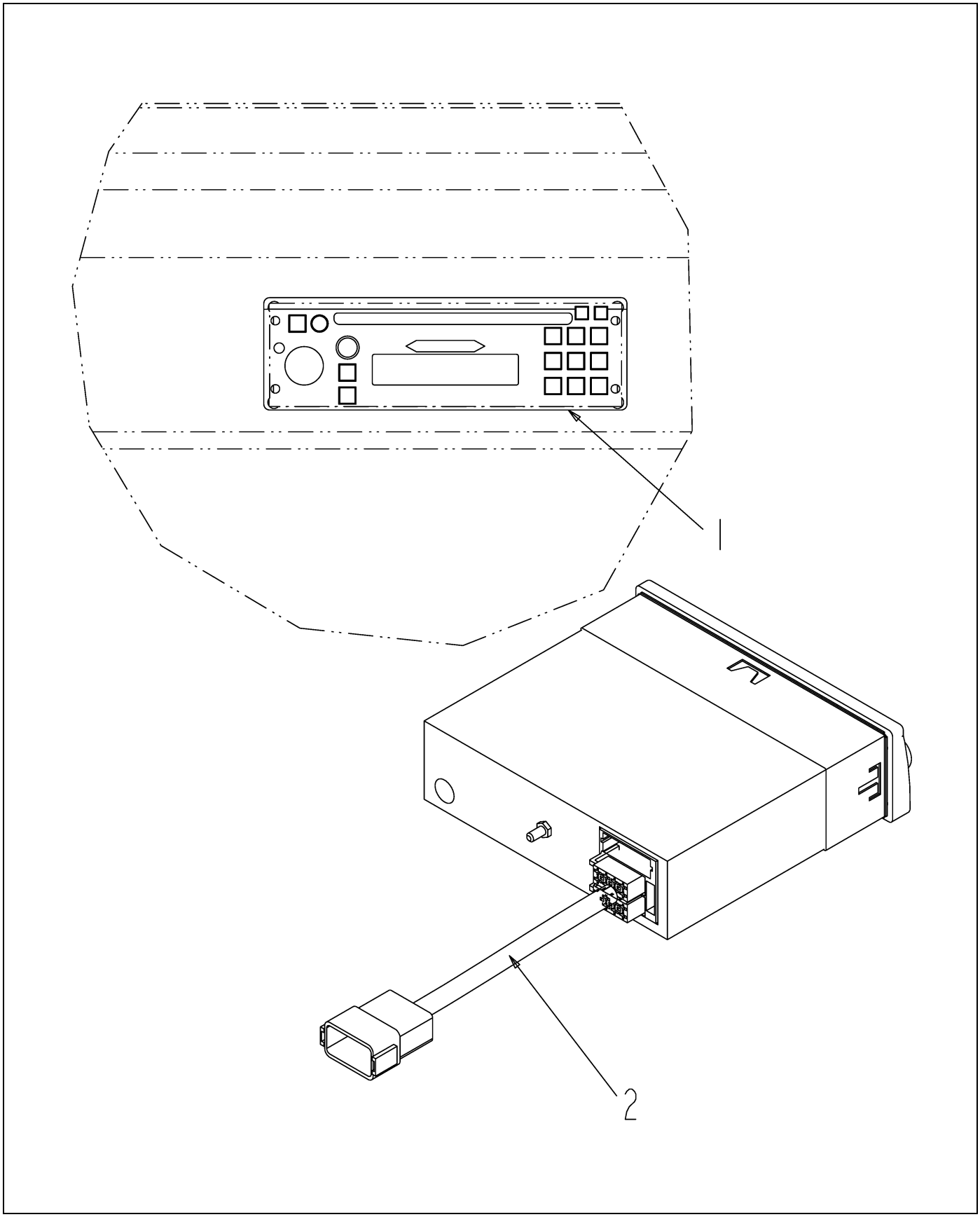

515489D1-01-N899-.TIF

Copyright © 2007 AGCO Corporation

KIT-RADIO,DELUXE

ITEM	PART #	QTY	DESCRIPTION	COMMENTS
1	509632D1	1	RADIO-CD	
2	514906D1	1	HARNESS AS.-RADIO ADAPTER	

Copyright © 2007 AGCO Corporation

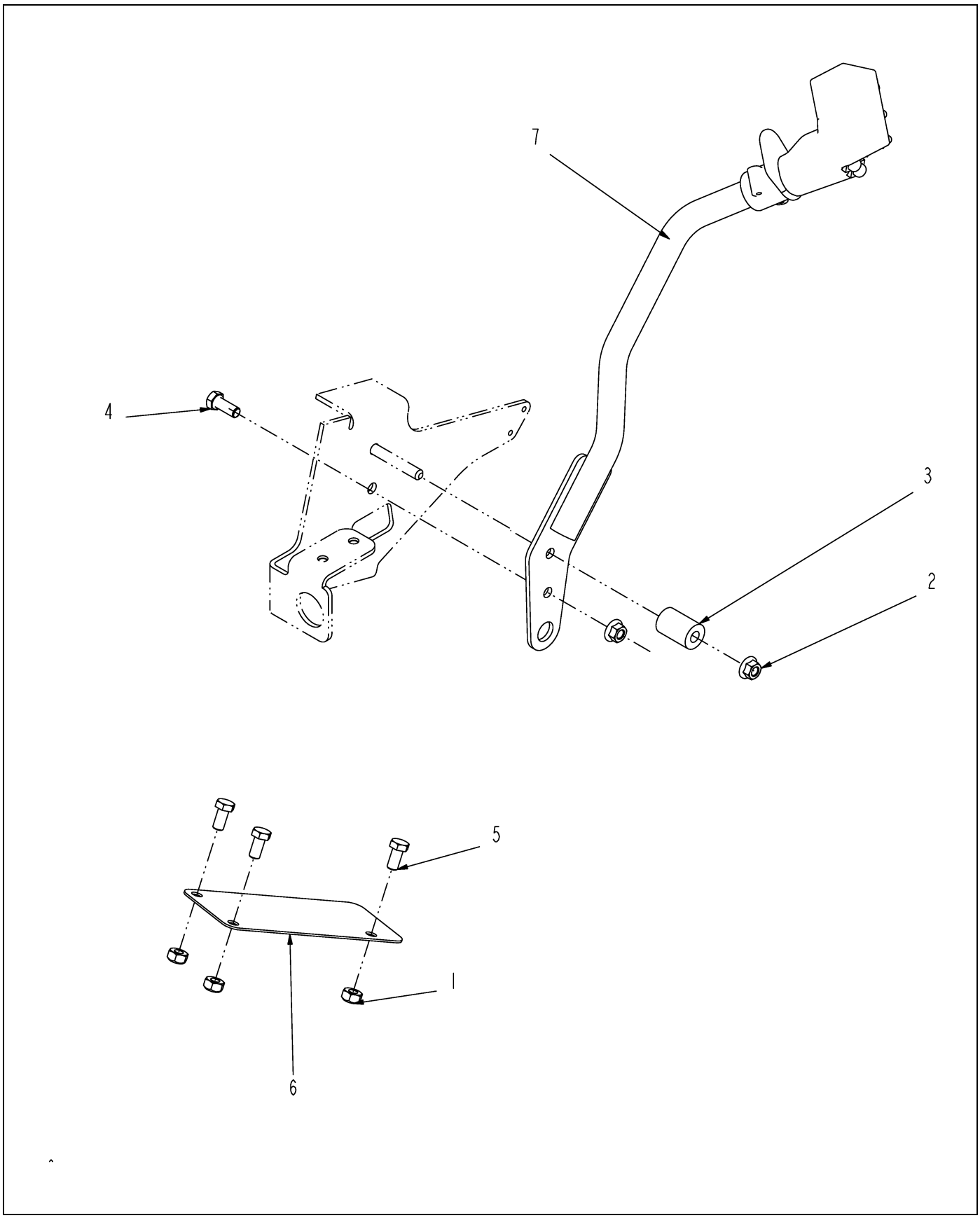

511987D1-03-N778-.TIF

Copyright © 2007 AGCO Corporation

JOYSTICK INSTL

ITEM	PART #	QTY	DESCRIPTION	COMMENTS
1	WR55272	3	NUT-LOCK,M10 X 1.5,PREV	
2	WR55301	2	NUT-FLANGE,M10 X 1.5,PREV	
3	WR129596	1	BUSHING-HANDLE,JOYSTICK	
4	AG561683	1	BOLT M10-1.5 X 25MM G8.8 ZN HH	
5	AG562463	3	BOLT M10-1.50X 20MM G8.8 ZN HH	
6	6803785	1	COVER-MOUNT,PEDAL	
7	511993D1	1	THROTTLE HANDLE ASM	SEE PAGE 10-18

Copyright © 2007 AGCO Corporation

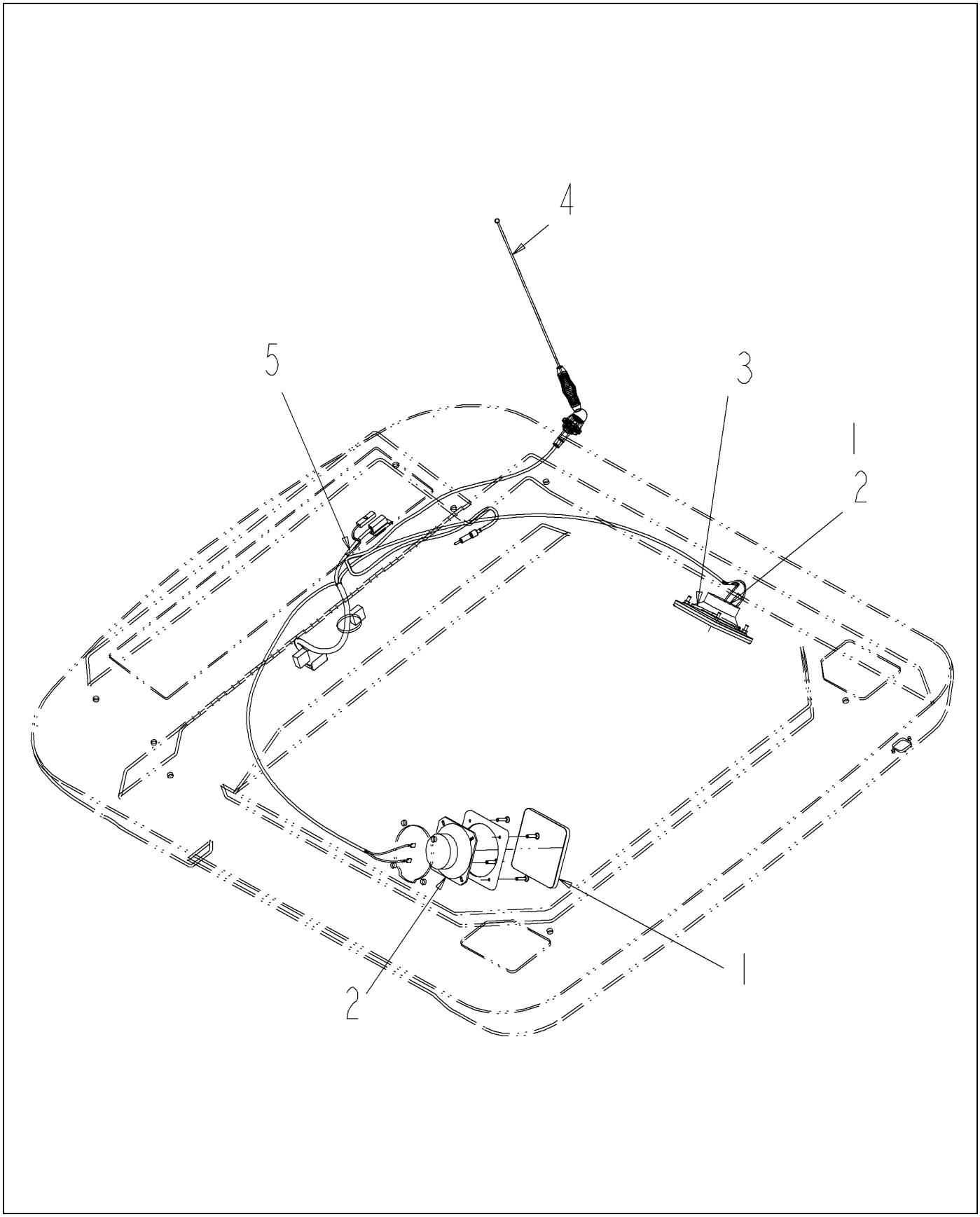

514910D1-03-R596-.TIF

Copyright © 2007 AGCO Corporation

GROUP-RADIO ACC.

ITEM	PART #	QTY	DESCRIPTION	COMMENTS
1	511104D1	2	GRILLE-SPEAKER	
2	511105D1	2	SPEAKER - RADIO	
3	511398D1	-	PLATE - SPEAKER	
4	513965D1	1	ANTENNA-RADIO	
5	514905D2	1	HARNESS-RADIO,SC	
	FOOTNOTE		S/N ..Txx1001	

Copyright © 2007 AGCO Corporation

A/C KIT-CAB 9-1
A/C KIT-FRONT 9-2
BLOWER KIT 9-3
HEATER KIT 9-4

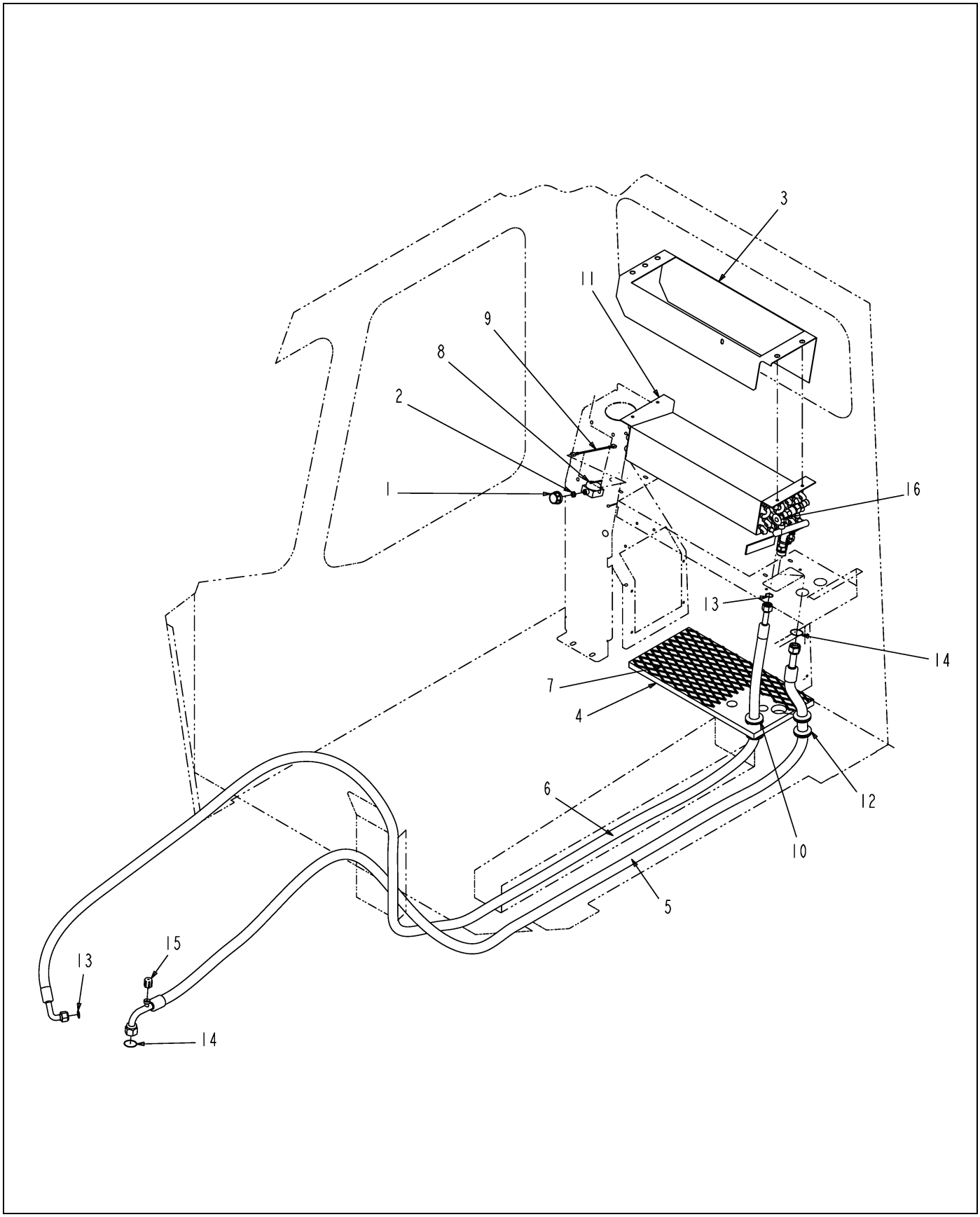

513167D1-03-R001-.TIF

Copyright © 2007 AGCO Corporation

ITEM	PART #	QTY	DESCRIPTION	COMMENTS
1	513172D1	1	KNOB-CONTROL ROTARY	
2	513183D1	1	NUT-7/16-28 UNEF-2B	
3	513192D1	1	COVER-EVAPORATOR CORE	
4	513193D1	1	GASKET-DRAIN PAN	
5	513194D1	1	HOSE ASSEMBLY-#10-#12	
6	513195D1	1	HOSE ASSY-#6-#8	
7	513197D1	1	SCREEN-EXPANDED METAL	
8	513198D1	1	THERMOSTAT	
9	513199D1	1	WIRE ASSY	
10	513201D1	2	GROMMET MULTI-USE	
11	514118D1	1	CORE ASSY-EVAPORATOR	[A]
12	514131D1	2	GROMMET	
13	516021D1	-	O RING-#6	
14	516023D1	-	O RING-#10	
15	516431D1	1	CAP-ACCESS PORT	
16	516432D1	1	EXPANSION VALVE	
	FOOTNOTE [A]		EFF S/N ..Txx1001	
	FOOTNOTE		EFF S/N ..Txx1001	

Copyright © 2007 AGCO Corporation

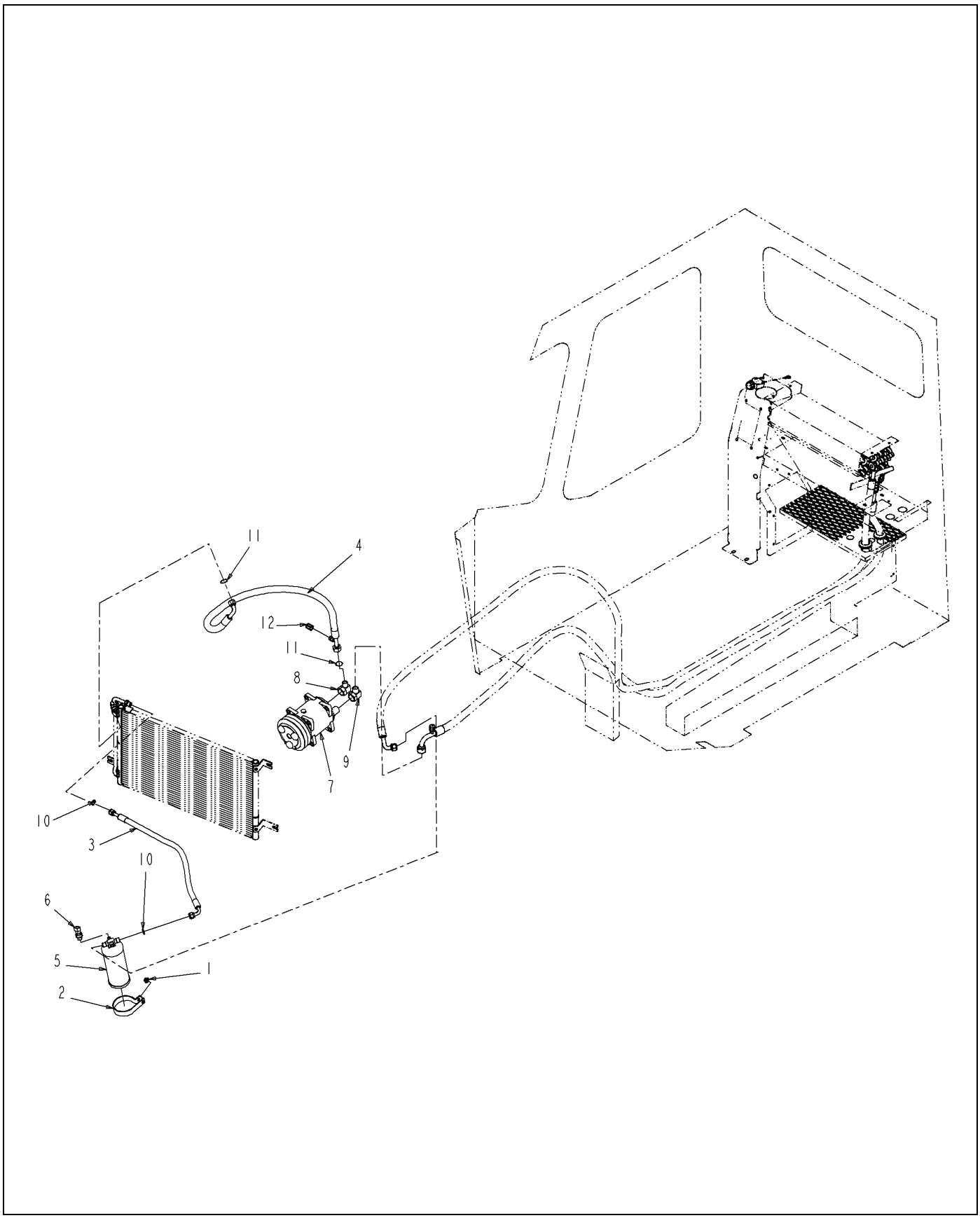

519992D1-01-N965-.TIF

Copyright © 2007 AGCO Corporation

A/C KIT-FRONT

ITEM	PART #	QTY	DESCRIPTION	COMMENTS
1	WR55280	1	NUT-FLANGE,M8 X 1.25	
2	513202D1	1	BRACKET-RECIEVER DRIER	
3	514124D1	1	HOSE-ASSY-#6	
4	514125D1	1	HOSE-ASSY-#8	
5	514126D1	1	RECIEVER DRIER	
6	514129D1	1	SWITCH-PRESSURE	
7	514130D1	1	COMPRESSOR-12V TERMINATED	
8	514133D1	1	FITTING-NO.8, 90 DEG TUBE IN 0 IN	
9	514134D1	1	FITTING-NO.10,90 DEG TUBE IN 0 IN	
10	516021D1	-	O RING-#6	
11	516022D1	-	O RING-#8	
12	516430D1	1	CAP-ACCESS PORT	

Copyright © 2007 AGCO Corporation

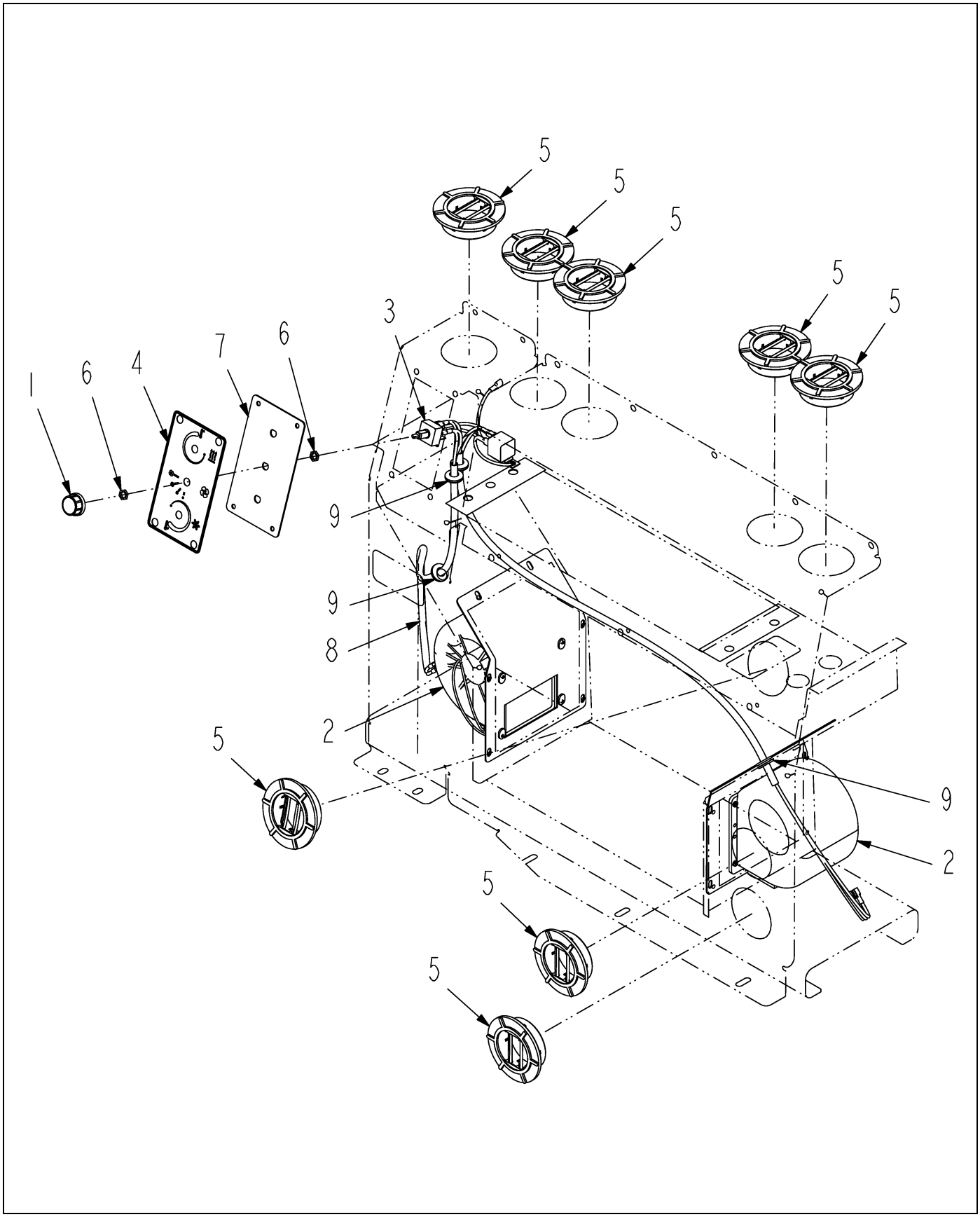

512876D1-01-N492-.TIF

Copyright © 2007 AGCO Corporation

BLOWER KIT

ITEM	PART #	QTY	DESCRIPTION	COMMENTS
1	513172D1	1	KNOB-CONTROL ROTARY	
2	513178D1	2	BLOWER ASSY	[A]
3	513180D1	1	SWITCH-ROTARY,3 SPEED	
4	513181D1	1	LABEL-CONTROL PANEL	
5	513182D1	8	LOUVER-3 INCH W/ RETAINER	
6	513183D1	2	NUT-7/16-28 UNEF-2B	
7	513184D1	1	PLATE-CONTROL PANEL	
8	513185D1	1	WIRE HARNESS	
9	514122D1	4	GROMMET	
	FOOTNOTE [A]		EFF S/N ..Txx1001	
	FOOTNOTE		EFF S/N ..Txx1001	

Copyright © 2007 AGCO Corporation

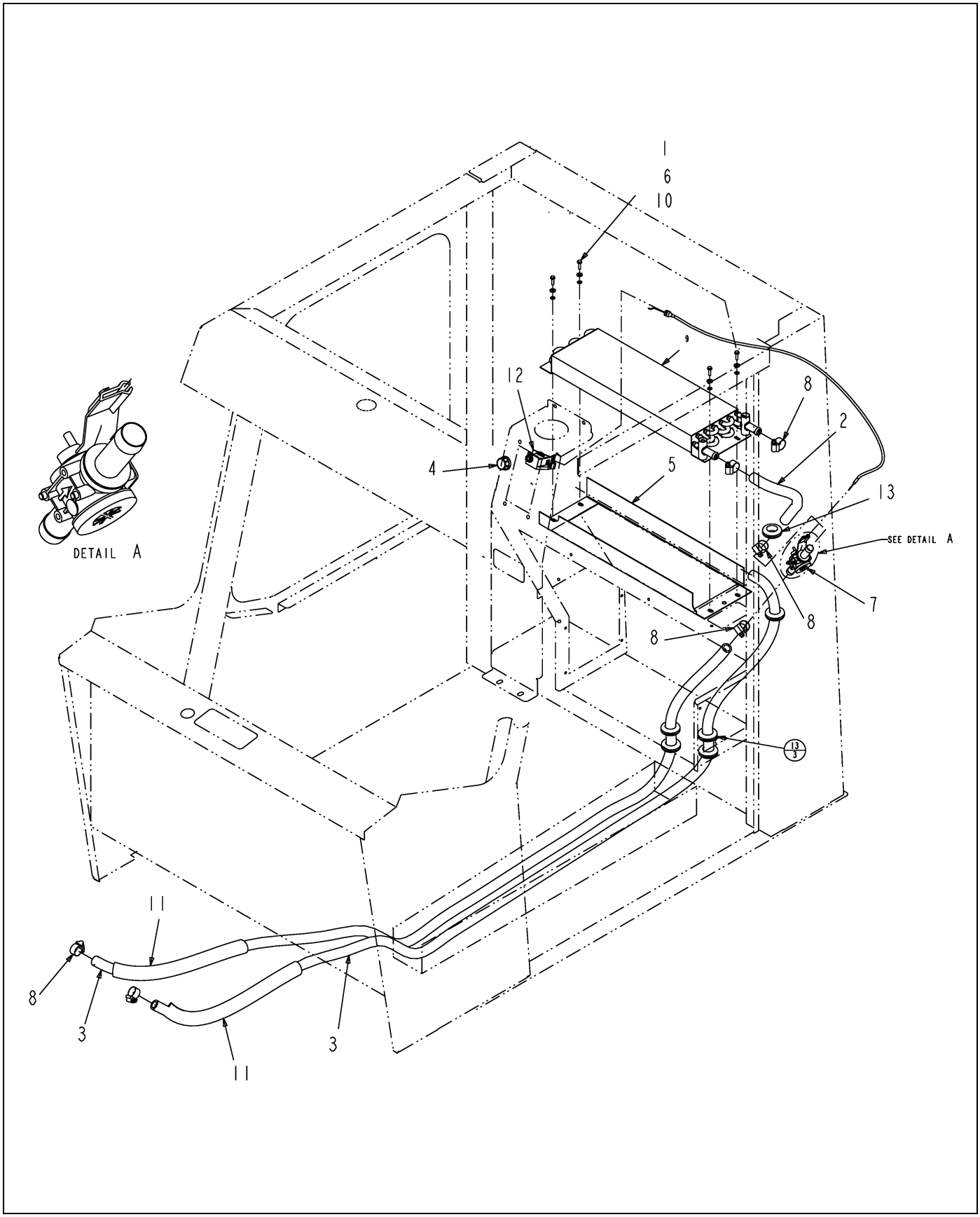

512877D1-01-N492-.TIF

Copyright © 2007 AGCO Corporation

HEATER KIT

ITEM	PART #	QTY	DESCRIPTION	COMMENTS
1	WR24555	4	WASHER-FLAT STD, NO. 10	
2	513170D1	1	HOSE-5/8 FORMED	
3	513171D1	-	HOSE-HEATER 5/8 ID (FWW) [BULK: 5410 MM]	
4	513172D1	1	KNOB-CONTROL ROTARY	
5	513173D1	1	MOUNTING PLATE-HEATER CORE	
6	513174D1	4	SCREW-10-32 HEX WSHR HD	
7	513175D1	1	VALVE-WATER,PUSH TO CLOSE	
8	513176D1	6	CLAMP-HOSE	
9	514115D1	1	HEATER CORE-3R 6T 18HDR	
10	514117D1	4	WASHER-10 EXTERNAL TOOTH	
11	514119D1	-	NYLON SLEEVE-BRAIDED [BULK: 940 MM]	
12	514121D1	1	COVNVERTER CONTROL-CABLE	
13	514131D1	6	GROMMET	
	FOOTNOTE		EFF S/N ..Txx1001	

Copyright © 2007 AGCO Corporation

ELEC INSTL-CAB, 4000AT	10-1
ELEC INSTL-CAB, 4000AT	10-2
ELEC INSTL-CAB, 4000AT	10-3
ELEC INSTL-CAB, 4000AT	10-4
ELEC INSTL-CAB, 4000AT	10-5
ELEC INSTL-CHASSIS,4000AT, EU	10-6
ELEC INSTL-CHASSIS,4000AT, EU	10-7
ELEC INSTL-CHASSIS,4000AT, EU	10-8
ELEC INSTL-CHASSIS,4000AT, EU	10-9
ELEC INSTL-CHASSIS,4000AT, EU	10-10
ELEC INSTL-CHASSIS,4000AT, EU	10-11
ELECTRICAL INSTL-5 VALVE	10-12
BATTERY INSTALL	10-13
ELECTRICAL INSTL-RELIEF VALVE	10-14
ELECTRICAL INSTL-3 VALVE	10-15
ALTERNATOR,140 AMP-2 GROOVE	10-16
MOTOR-STARTER	10-17
THROTTLE HANDLE ASM	10-18

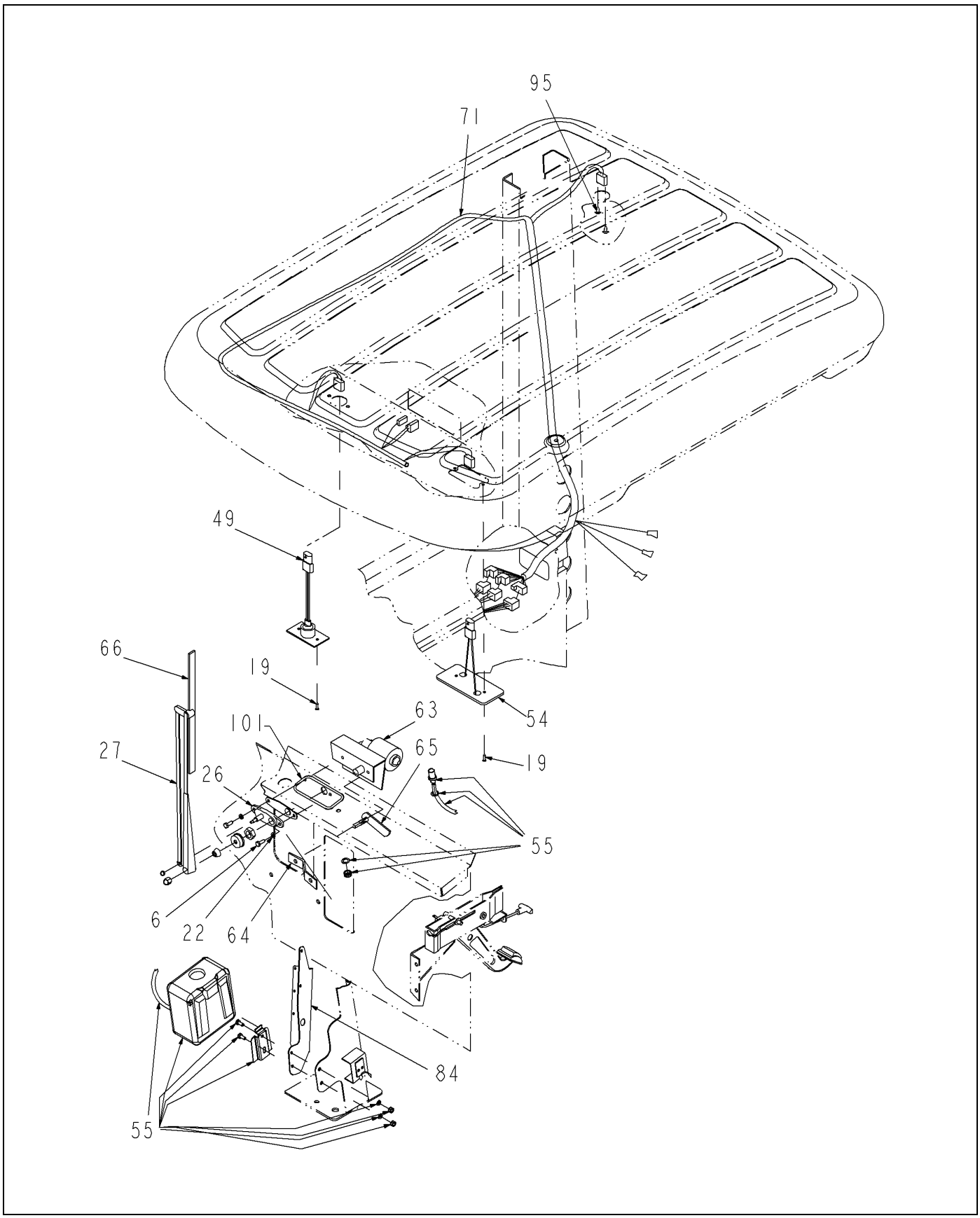

509520D1-02-R508-01.TIF

Copyright © 2007 AGCO Corporation

ITEM	PART #	QTY	DESCRIPTION	COMMENTS
6	WR29574	2	SCREW-CAP HEX 1/4 NF X	
19	WR55325	4	SCREW-TAP PAN,#8-18 X 3/4	
22	AG550493	2	WASHER 0.25 LK ZN REG	
26	AG609614	1	PANTOGRAPH ARM ADAP KIT	
27	AG609615	1	18 IN PANTOGRAPHIC ARM(B) 518120	
49	6661371	1	LAMP-COURTESY	
54	6664368	1	LIGHT ASSY-DOME,W/SW	
55	6664438	1	KIT-WINDSHIELD WASHER	
63	503898D1	1	KIT-WIPER MOTOR	
64	503899D1	1	ARM-DRIVE,WIPER	
65	6672499	1	SHAFT-WIPER PIVOT	
66	6672502	1	BLADE	
71	506308D1	1	HARNESS-CAB TOP	
84	WR129514	1	BRKT-FUSE/RELAY	
95	6589675	2	SCREW-TR HD,TAPPING	
101	AG513654	-	EDGE LINER .19 IN TK MAT PVC [BULK: 1.500 FT]	

Copyright © 2007 AGCO Corporation

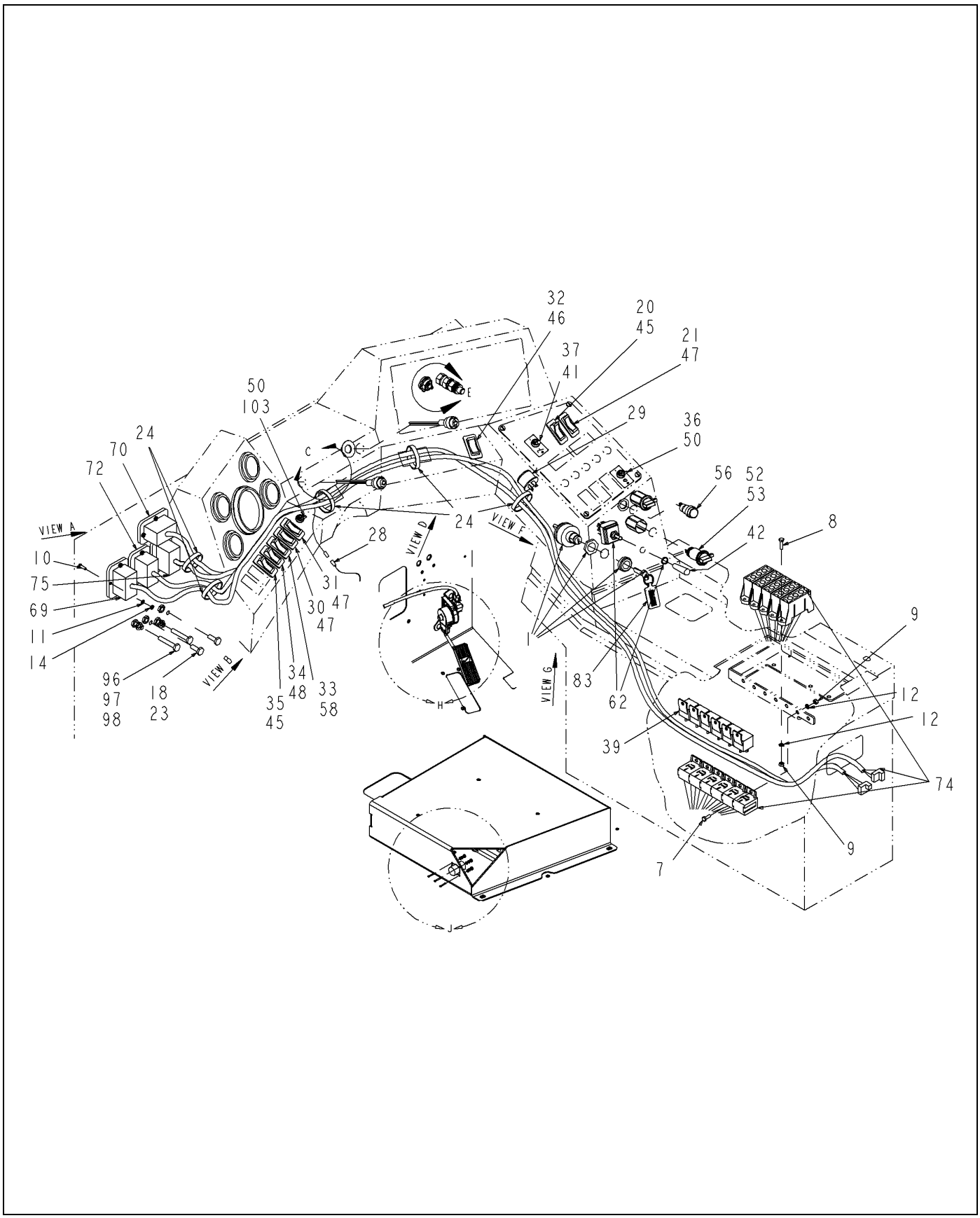

509520D1-02-R508-02.TIF

Copyright © 2007 AGCO Corporation

ELEC INSTL-CAB, 4000AT

ITEM	PART #	QTY	DESCRIPTION	COMMENTS
1	WR11853	1	IGNITION SWITCH LOADER	
7	WR55026	7	SCREW-CAP HEX M5 X 12	
8	WR55029	4	SCREW-CAP HEX M5 X 20	
9	WR55071	11	NUT-HEX,M5 X .8 CL10	
10	WR55091	18	SCREW-CAP HEX M4 X 16	
11	WR55102	18	WASHER-LOCK SPRING,4MM ID	
12	WR55103	11	WASHER-LOCK SPRING,5MM ID	
14	WR55249	18	NUT-LOCK,M4 G4D	
18	WR55312	4	NUT-LOCK HEX,M10 X 1.5,	
20	WR129348	1	DECAL-ON/OFF,CRUISE	
21	WR129349	1	DECAL-INC/DEC,CRUISE	
23	AG561683	4	BOLT M10-1.5 X 25MM G8.8 ZN HH	
24	AG562496	8	TIE CABLE 15.0 .18-4.00 BLACK	
28	6517924	1	BODY-CONNECTOR	
29	6557904	1	FLASHER	
30	6597932	1	DECAL-AXLE,LH (ENG)	
31	6597933	1	DECAL-AXLE,RH (ENG)	
32	6597941	1	DECAL-PRESSURE,ADJ	
33	6597943	1	DECAL-WIPER/WASHER	
34	6597944	1	DECAL-HEADLIGHTS	
35	511828D1	1	DECAL, WARNING LT.	
36	6597947	1	DECAL-SPRAY PUMP (ENG)	
37	6597990	1	DECAL-AGITATOR (ENG)	
39	6632180	6	RELAY-40 AMP CONTINUOUS,DUTY	
41	6647887	1	SWITCH-ELECTRIC	
42	6653332	1	EXTENSION-HANDLE	
45	6661250	2	SWITCH-ROCKER	
46	6661252	1	SWITCH-ROCKER	
47	6661253	3	SWITCH-ROCKER	
48	6661254	1	SWITCH-ROCKER	
50	6662055	2	SWITCH-TOGGLE	
52	6664223	2	OUTLET-ELECTRICAL	
53	6664224	2	CAP-END,ELECTRICAL	
56	6666677	3	LIGHT-INDICATOR	
58	6667933	1	SWITCH-ROCKER	
62	6672267	1	SWITCH-TOGGLE	
69	6800691	1	HARNESS-SPRAY	
70	6802445	1	HARNESS-HYD	
72	513776D1	1	HARNESS-LIGHT,INSIDE	
74	513774D1	1	POWER GROUND HARNESS	
75	509522D1	1	HARNESS-ENG ELECTRONICS, CAB	
83	WR129807	1	KEYCHAIN-LEATHER,SC	
96	AG029295	2	NUT M10X1.5 CL9 ZN PL CHRO DIP	
97	AG562271	2	WASHER M10 LK ZN REG	
98	WR55393	2	SCREW-CAP HEX M10 X 70	
103	6597946	1	DECAL,FLOOD LIGHTS	

Copyright © 2007 AGCO Corporation

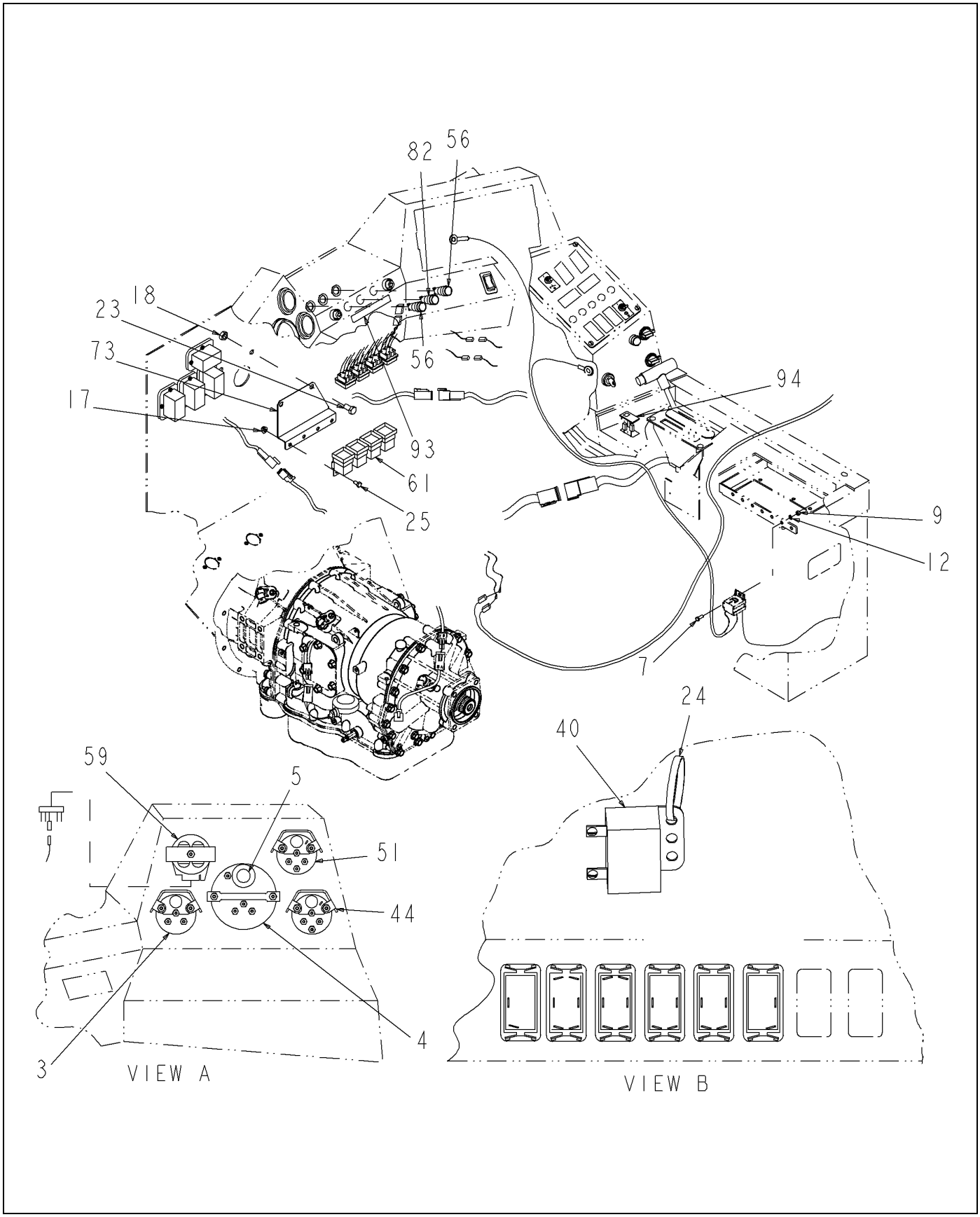

509520D1-02-R508-03.TIF

Copyright © 2007 AGCO Corporation

ITEM	PART #	QTY	DESCRIPTION	COMMENTS
3	WR24913	1	GAUGE-FUEL,12V	
4	WR25503	1	TACHOMETER W/HOUR METER	
5	WR25504	1	KIT-LIGHT,TACH/HOUR METER	
7	WR55026	7	SCREW-CAP HEX M5 X 12	
9	WR55071	11	NUT-HEX,M5 X .8 CL10	
12	WR55103	11	WASHER-LOCK SPRING,5MM ID	
17	WR55300	4	NUT-FLANGE,M6 X 1.0,PREV	
18	WR55312	4	NUT-LOCK HEX,M10 X 1.5,	
23	AG561683	4	BOLT M10-1.5 X 25MM G8.8 ZN HH	
24	AG562496	8	TIE CABLE 15.0 .18-4.00 BLACK	
25	AG562639	4	BOLT M6 1.00X12MM G8.8 ZN HHD	
40	6644960	1	BUZZER	
44	6659911	1	GAUGE-TEMPERATURE,WATER	
51	6662802	1	GAUGE-OIL PRESSURE	
56	6666677	3	LIGHT-INDICATOR	
59	WR129197	1	CLUSTER-LIGHT,WARNING	
61	6670312	4	SWITCH-MAGNETIC	
73	6803641	1	BRACKET-RELAY	
82	WR129361	1	LIGHT-INDICATOR, AMBER	
93	WR129420	1	DECAL-WARN,DIAG,BRAKE	
94	WR131665	1	LIGHT-RANGE INHIBIT	

Copyright © 2007 AGCO Corporation

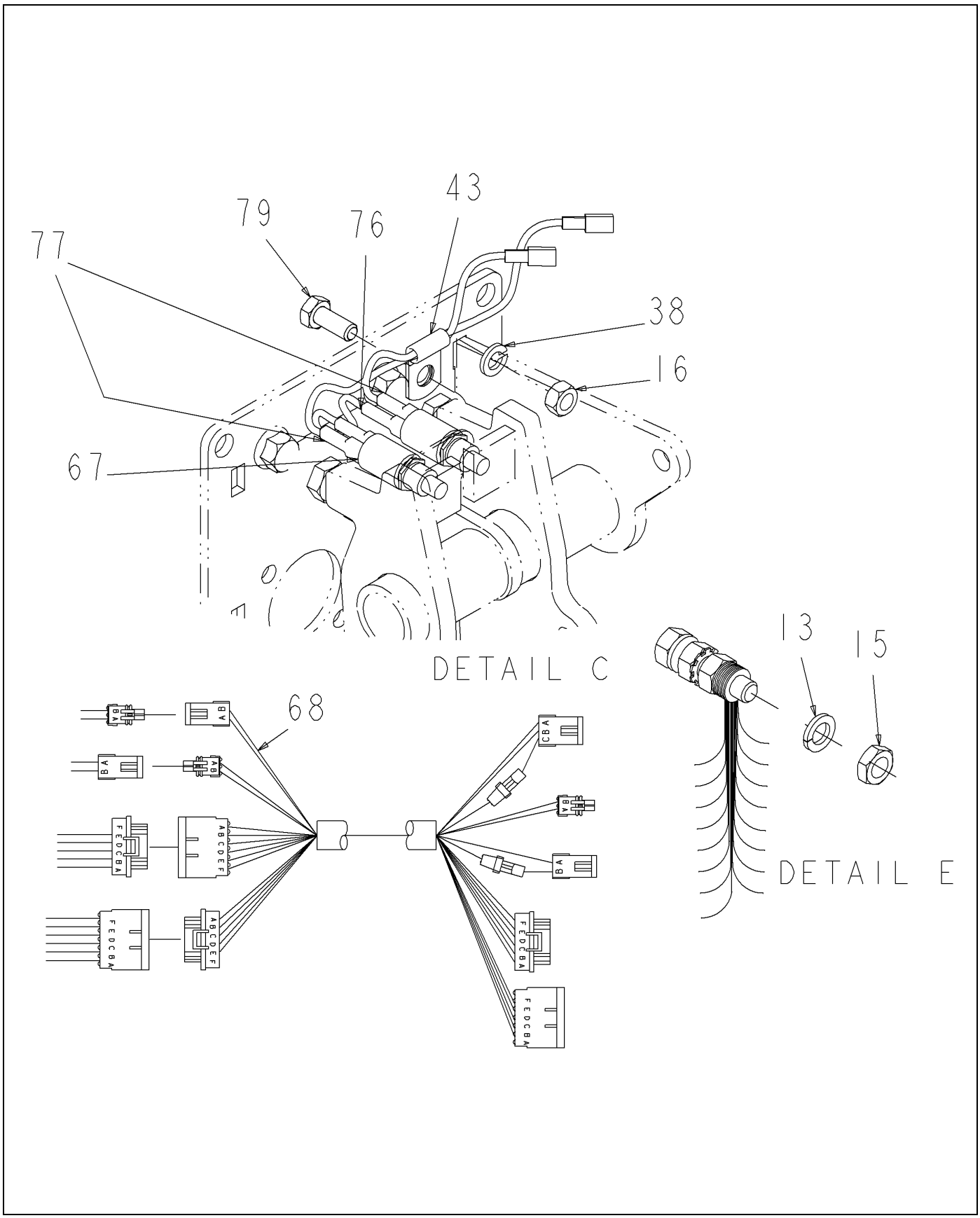

509520D1-02-R508-04.TIF

Copyright © 2007 AGCO Corporation

ITEM	PART #	QTY	DESCRIPTION	COMMENTS
13	WR55106	1	WASHER-LOCK SPRING,10 MM	
15	WR55250	1	NUT-LOCK,M10 X 1.5 G4D	
16	400340X1	1	NUT-M8X1.25X13 HEX ZND1	
38	AG561679	1	WASHER LOCK M8 ZN	
43	WR27174	1	CLAMP-SUPPORT,CUSHION,	
67	6673315	2	SWITCH-BRAKE	
68	6800690	1	HARNESS-SWITCHES	
76	6804874	1	HARNESS-BRAKE,4000	
77	520571D1	2	HARNESS-JUMPER,BRAKE	
79	WR55035	1	SCREW-CAP HEX M8 X 20	

Copyright © 2007 AGCO Corporation

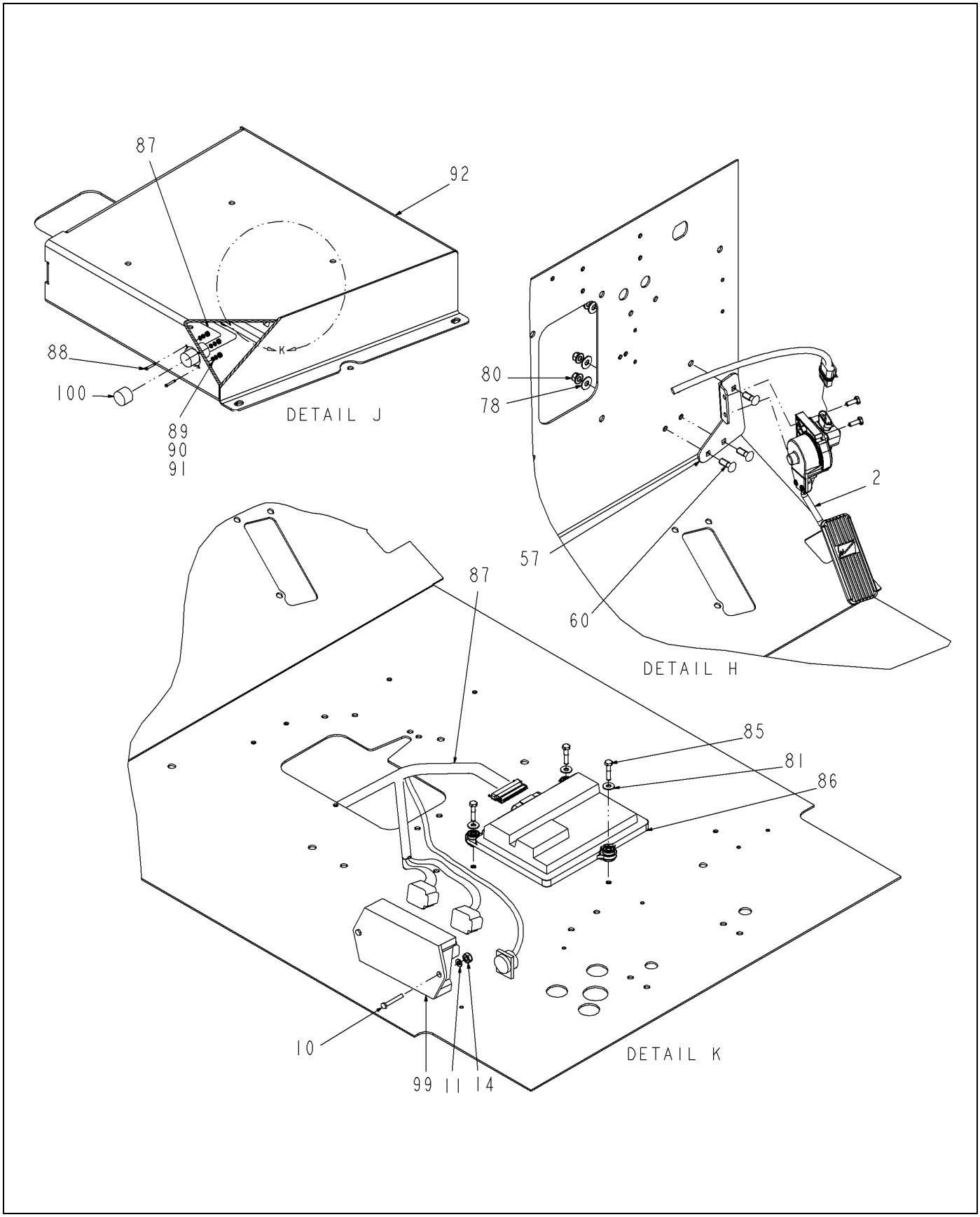

509520D1-02-R508-05.TIF

Copyright © 2007 AGCO Corporation

ITEM	PART #	QTY	DESCRIPTION	COMMENTS
2	WR126892	1	PEDAL-THROTTLE	SEE PAGE 8-1
10	WR55091	18	SCREW-CAP HEX M4 X 16	
11	WR55102	18	WASHER-LOCK SPRING,4MM ID	
14	WR55249	18	NUT-LOCK,M4 G4D	
57	WR129359	1	BRKT-THROTTLE PEDAL MOUNT	
60	AG562676	3	BOLT 0.31-18NCX 1.00 G5 ZN CRG	
78	AG551015	3	WASHER 0.31 FL ZN REG TYPE-B	
80	WR55352	3	NUT-TOPLOCK,5/16-18UNC G8	
81	AG550507	3	WASHER 0.25 FL ZN REG TYPE-B	
85	AG558788	3	BOLT 0.25-20NCX 1.25 G5 ZN HHD	
86	508214D1	-	TCU-ALLISON	
87	508226D1	-	HARNESS-TRANSMISSION,ALLISON	
88	AG518676	4	SCREW #4-40NCX 0.75 HXSHD SS	
89	AG563174	4	WASHER #4 FL SS NAR TYPE-B	
90	AG518674	4	WASHER LOCK #4 REG SS	
91	AG518673	4	NUT #4-40NC HEX SS REG	
92	WR129453	-	MOUNT WLDMT-SEAT	
99	AG121750	1	MODULE-RELAY,2 PACK	
100	AG519436	1	CAP CONNECTOR 9 PIN	

Copyright © 2007 AGCO Corporation

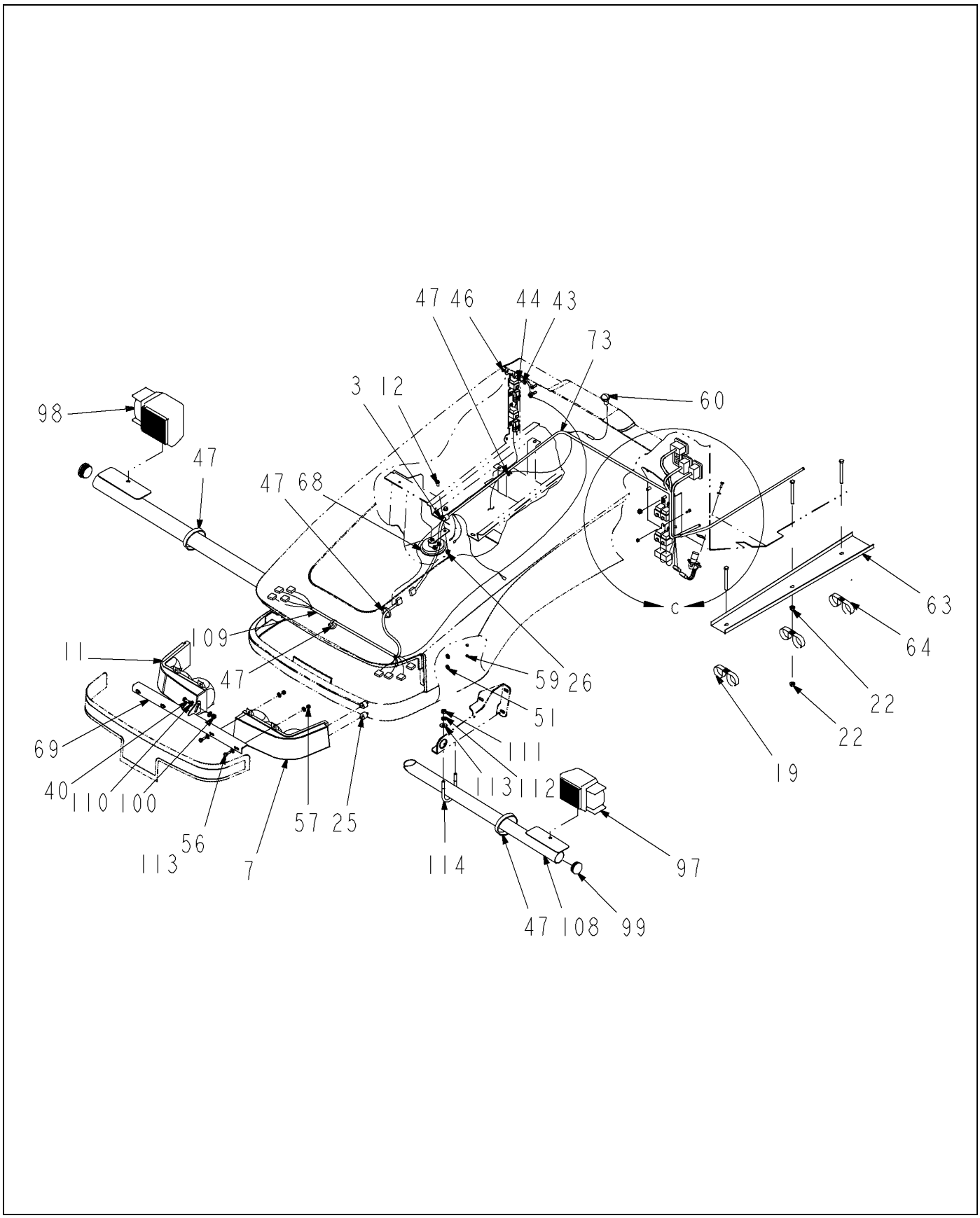

515740D1-03-R485-01.TIF

Copyright © 2007 AGCO Corporation

ITEM	PART #	QTY	DESCRIPTION	COMMENTS
REF	AG521170	1	BREAKER-CIRCUIT,60AMP MANUAL	
3	WR50830	2	CLAMP-SUPPORT,CUSHION,	
7	AG421135	1	HEADLIGHT-HALOGEN,WRAPPING,LH	
11	AG421136	1	HEADLIGHT-HALOGEN,WRAPPING,RH	
12	WR55206	1	SCREW-HEX FLG,M8X1.25X20 CL8.8	
19	WR55248	6	CLAMP-SUPPORT CUSHION DBL	
22	WR55281	10	NUT-FLANGE,M10 X 1.5	
25	AG523877	4	MOUNT-STUD,CYLINDRICAL,M6-1.00	
26	WR55410	1	NUT-FLANGE,M8 X 1.25 CL8,	
40	AG550175	1	BOLT 0.37-16NCX 1.00 G5 ZN HHD	
43	AG550485	15	BOLT 0.25-20NCX 0.75 G5 ZN HHD	
44	AG550493	17	WASHER 0.25 LK ZN REG	
46	AG550612	24	NUT 0.25-20NC HEX ZN REG	
47	AG562496	13	TIE CABLE 15.0 .18-4.00 BLACK	
51	AG550507	4	WASHER 0.25 FL ZN REG TYPE-B	
56	AG551252	12	BOLT 0.31-18NCX 1.00 G5 ZN HHD	
57	AG601888	12	NUT 0.31-18NC HEX ZN REG NY	
59	AG713398	4	LOCK NUT M6	
60	6617401	1	LIGHT ASSY	
63	6626432	1	CARRIER-WIRE HARNESS	
64	AG561793	5	CLAMP-HOSE,2,.75 WIDE,RUB-COAT	
68	501998D1	1	HORN	
69	WR128650	1	BRKT WLDMT-HEADLIGHT,ADJ	
73	508577D1	1	HARNESS-LIGHTS	
97	AG420939	1	HEADLIGHT ASM-WIRING,LH	SEE PAGE 11-1
98	AG420940	1	HEADLIGHT ASM-WIRING, RH	SEE PAGE 11-2
99	WR29674	2	PLUG-HOLE, PLASTIC	
100	AG522562	1	NUT-.38-16,SS,SFLG,H	
108	511631D1	1	LIGHT BRACKET WLDMT FRONT,EUR	
109	506307D1	1	HARNESS-LIGHTS,EUR	
110	AG551007	2	WASHER 0.37 FL ZN REG TYPE-B	
111	AG562090	4	NUT 0.31-18NC HEX SS REG	
112	AG562051	4	WASHER 0.31 LK SS REG	
113	AG551015	12	WASHER 0.31 FL ZN REG TYPE-B	
114	AG213064	2	BOLT-U .31-18X2.25X 3.12RDG5ZN	

Copyright © 2007 AGCO Corporation

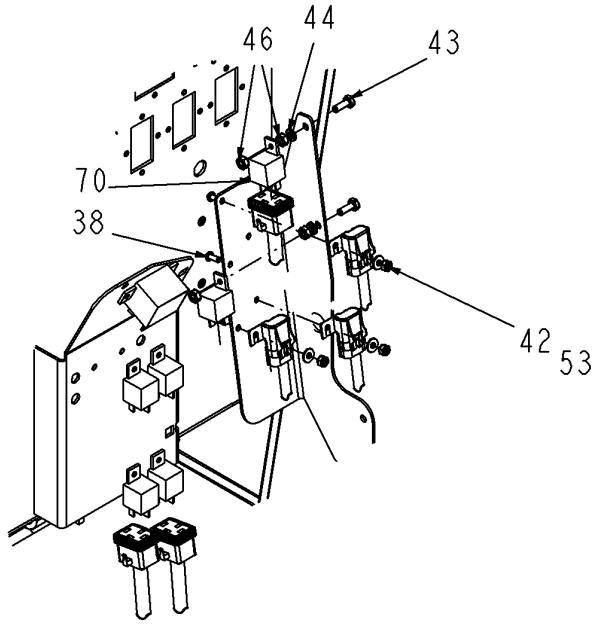

VIEW F-F
RELAY/FUSE PANEL

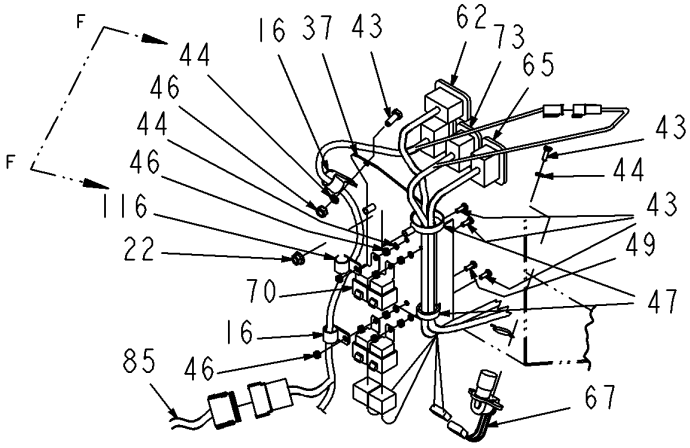

DETAIL C

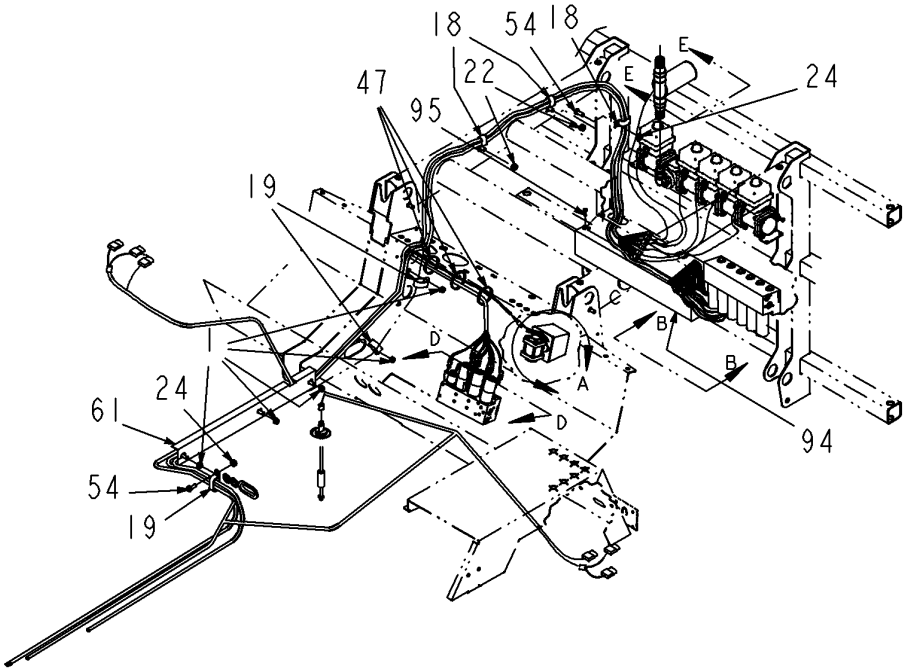

515740D1-03-R485-02.TIF

Copyright © 2007 AGCO Corporation

ELEC INSTL-CHASSIS,4000AT, EU

ITEM	PART #	QTY	DESCRIPTION	COMMENTS
1	WR11514	5	NUT-FLANGE, 3/8	
16	AG560480	2	CLAMP 1.25-COATED HOSE CO	
18	WR55247	3	CLAMP-SUPPORT CUSHION DBL	
19	WR55248	6	CLAMP-SUPPORT CUSHION DBL	
22	WR55281	10	NUT-FLANGE,M10 X 1.5	
24	WR55312	3	NUT-LOCK HEX,M10 X 1.5,	
37	515745D1	1	COVER-ELECTRICAL,SC	
38	AG517975	4	SCREW 10-24NCX0.50 RD HD SS	
42	AG562082	4	WASHER #10 FL SS REG TYPE-B	
43	AG550485	15	BOLT 0.25-20NCX 0.75 G5 ZN HHD	
44	AG550493	17	WASHER 0.25 LK ZN REG	
46	AG550612	24	NUT 0.25-20NC HEX ZN REG	
47	AG562496	13	TIE CABLE 15.0 .18-4.00 BLACK	
49	AG550698	1	BOLT 0.25-20NCX 1.00 G5 ZN HHD	
53	AG027274	4	NUT #10-24NC HEX SS REG NY	
54	AG561683	3	BOLT M10-1.5 X 25MM G8.8 ZN HH	
61	6618959	1	SHIELD-WIRE HARNESS	
62	WR134420	1	HARNESS - HYDRAULIC	
65	6628372	1	HARNESS-SPRAY	
67	6664372	1	SWITCH-DIMMER	
70	6670312	7	SWITCH-MAGNETIC	
73	508577D1	1	HARNESS-LIGHTS	
85	WR129803	1	HARNESS-I/O,CRUISE CONTROL	
94	WR37895	1	COVER-ELECTRICAL	
95	WR55205	6	SCREW-HEX FLG,M8X1.25X16 CL8.8	
116	WR55226	1	CLAMP-SUPPORT CUSHION,	

Copyright © 2007 AGCO Corporation

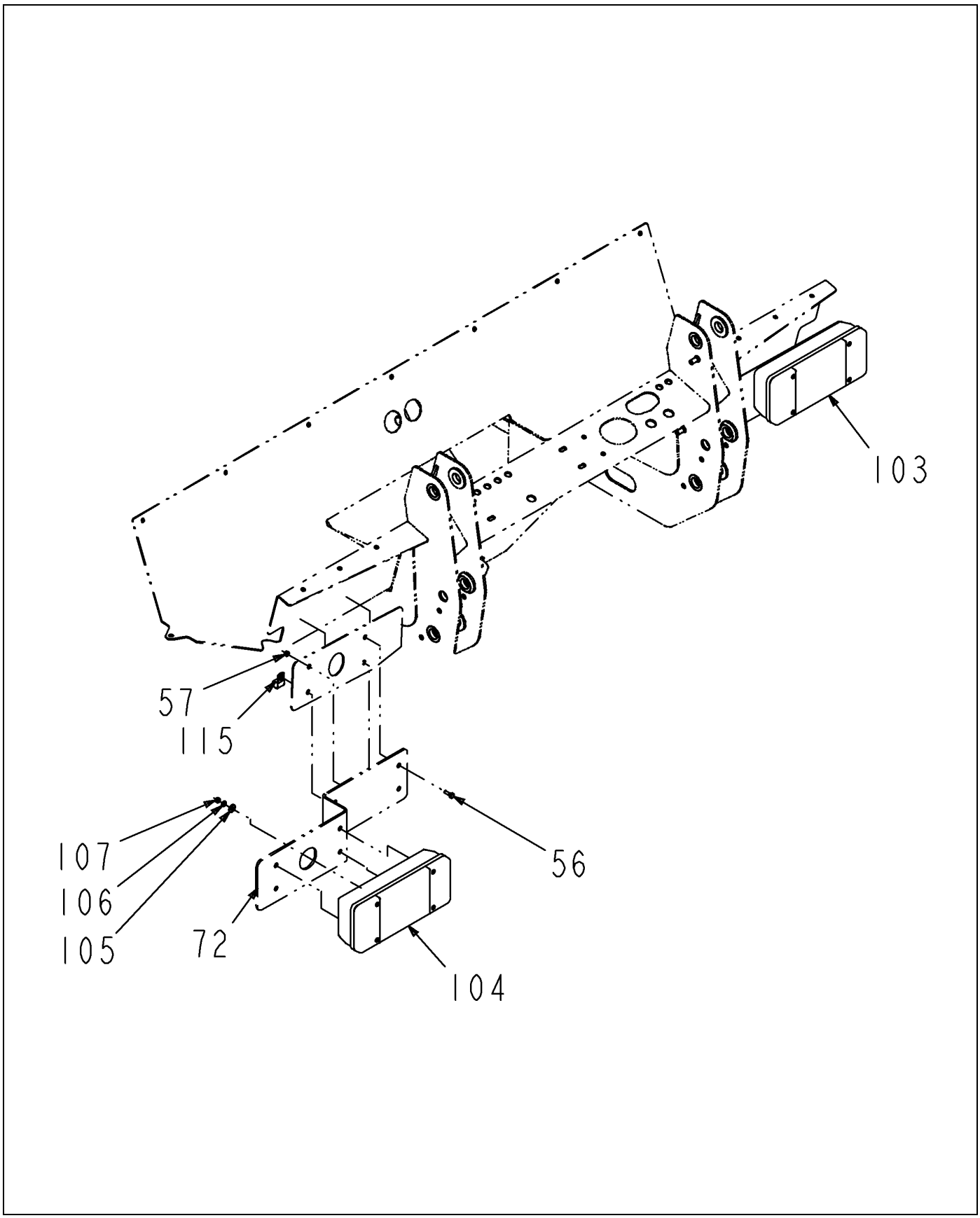

515740D1-03-R485-03.TIF

Copyright © 2007 AGCO Corporation

ITEM	PART #	QTY	DESCRIPTION	COMMENTS
56	AG551252	12	BOLT 0.31-18NCX 1.00 G5 ZN HHD	
57	AG601888	12	NUT 0.31-18NC HEX ZN REG NY	
72	511466D1	2	REAR LIGHT BRACKET	
103	AG516567	1	LAMP CLUSTER REAR RH	SEE PAGE 11-3
104	AG516568	1	LAMP CLUSTER REAR LH	SEE PAGE 11-4
105	AG515121	8	WASHER 0.25 FL SS REG TYPE-B	
106	AG515122	8	WASHER 0.25 LK SS REG	
107	AG562793	8	NUT HEX M6 X 1.00	
115	WR55229	1	CLAMP-SUPPORT CUSHION,	

Copyright © 2007 AGCO Corporation

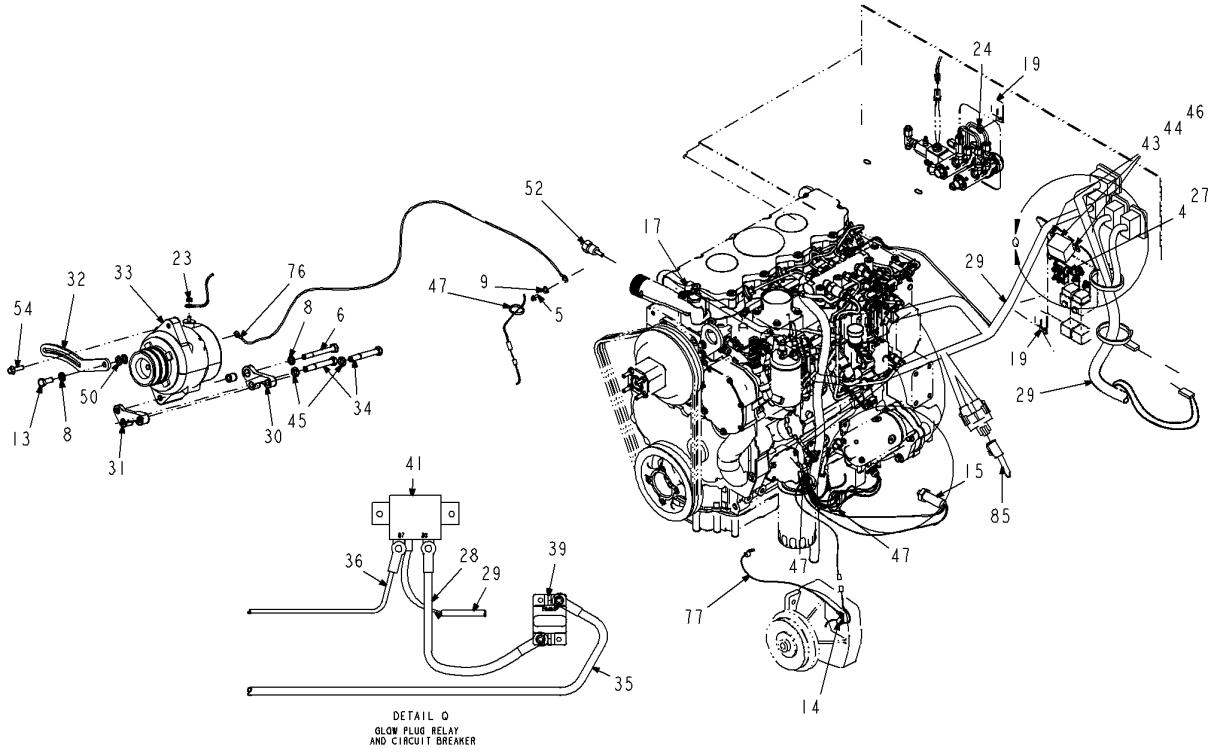

515740D1-03-R485-04.TIF

Copyright © 2007 AGCO Corporation

ITEM	PART #	QTY	DESCRIPTION	COMMENTS
4	WR55026	2	SCREW-CAP HEX M5 X 12	
5	WR55045	1	SCREW-CAP HEX M10 X 16	
6	WR55053	1	SCREW-CAP HEX M10 X 90	
8	WR55106	2	WASHER-LOCK SPRING,10 MM	
9	WR55128	1	WASHER-LOCK EXT TOOTH,	
13	WR55208	1	SCREW-HEX FLG,M8X1.25X30 CL8.8	
14	WR27174	1	CLAMP-SUPPORT,CUSHION,	
15	6660204	1	SENSOR-PRESSURE	
17	WR55237	1	CLAMP-SUPPORT CUSHION,	
19	WR55248	6	CLAMP-SUPPORT CUSHION DBL	
23	WR55288	1	NUT-FLANGE,M6 X 1.0 CL10	
24	WR55312	3	NUT-LOCK HEX,M10 X 1.5,	
27	WR55412	2	NUT-LOCK,M5 X .8,PREV	
28	517521D1	1	CABLE-RELAY, CKT BKR	
29	509523D1	1	ENGINE HARNESS AT	
30	WR126431	1	MOUNT-ALTERNATOR,REAR	
31	WR126432	1	MOUNT-ALTERNATOR	
32	WR126463	1	BRACKET-ALTERNATOR	
33	WR126509	1	ALTERNATOR,140 AMP-2 GROOVE	[A] SEE PAGE 10-16
34	WR126532	2	SCREW-HEX CAP .4375X14X3.25 YZ	
35	517522D1	1	CABLE-RED .31 #10	
36	515523D1	1	HARNESS-MASTER MODULE	
41	AG516864	1	RELAY-ELEC,12VDC,75AMP	
43	AG550485	15	BOLT 0.25-20NCX 0.75 G5 ZN HHD	
44	AG550493	17	WASHER 0.25 LK ZN REG	
45	AG550558	2	WASHER 0.43 LK ZN REG	
46	AG550612	24	NUT 0.25-20NC HEX ZN REG	
47	AG562496	13	TIE CABLE 15.0 .18-4.00 BLACK	
50	AG550981	2	WASHER 0.37 FL ZN NAR TYPE-B	
52	WR18171	1	SENDER-TEMP,-8MP	
54	AG561683	3	BOLT M10-1.5 X 25MM G8.8 ZN HH	
76	WR55648	1	HARNESS ALT GRD	
77	WR55650	1	HARNESS, GRD PUMP	
85	WR129803	1	HARNESS-I/O,CRUISE CONTROL	
	FOOTNOTE [A]		ITEMS 2,4,5,7,9,10,13-19,21,22,24,26-30 CANNOT BE PURCHASED INDIVIDUALLY BUT ARE INCLUDED IN THE ALTERNATOR.	

Copyright © 2007 AGCO Corporation

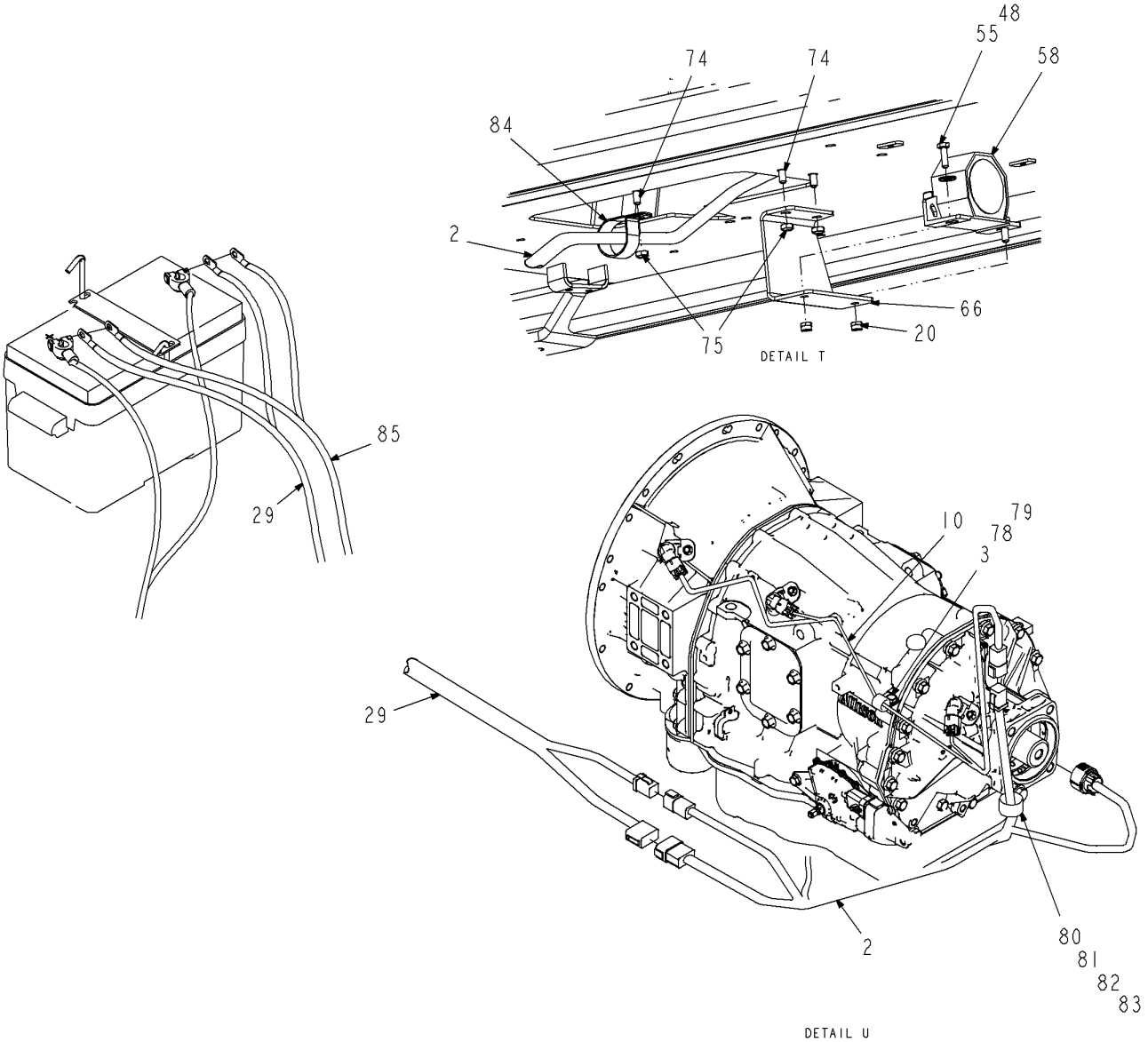

515740D1-03-R485-05.TIF

Copyright © 2007 AGCO Corporation

ELEC INSTL-CHASSIS,4000AT, EU

ITEM	PART #	QTY	DESCRIPTION	COMMENTS
2	508226D1	1	HARNESS-TRANSMISSION,ALLISON	
3	WR50830	2	CLAMP-SUPPORT,CUSHION,	
10	WR129504	1	HARNESS-SPEED SENSOR,ALLISON	
20	WR55271	2	NUT-LOCK,M6 X 1.0,PREV	
29	509523D1	1	ENGINE HARNESS AT	
48	AG550671	2	WASHER 0.25 FL ZN SAE TYPE-A	
55	AG562327	2	BOLT M6-1.00X20MM G8.8 ZN HHD	
58	6579858	1	ALARM-BACKUP	
66	WR129484	1	MOUNT-BACKUP ALARM	
74	AG563099	3	BOLT 0.25-20NCX 0.62 SS HHD	
75	AG027275	3	NUT 0.25-20NC HEX SS REG NY	
78	WR25752	1	SCREW-CAP HEX M8 X 16,	
79	AG520880	1	WASHER-FL,M8,ZN,REG	
80	AG561753	1	CLAMP-HOSE,1,1 WIDE,RUB-COAT	
81	AG550817	1	BOLT 0.50-13NCX 1.50 G5 ZN HHD	
82	AG561617	1	WASHER 0.50 FL ZN SAE TYPE-A	
83	6503451	1	SPACER	
84	AG521933	1	CLAMP-RUBBER COATED,1.75	
85	WR129803	1	HARNESS-I/O,CRUISE CONTROL	

Copyright © 2007 AGCO Corporation

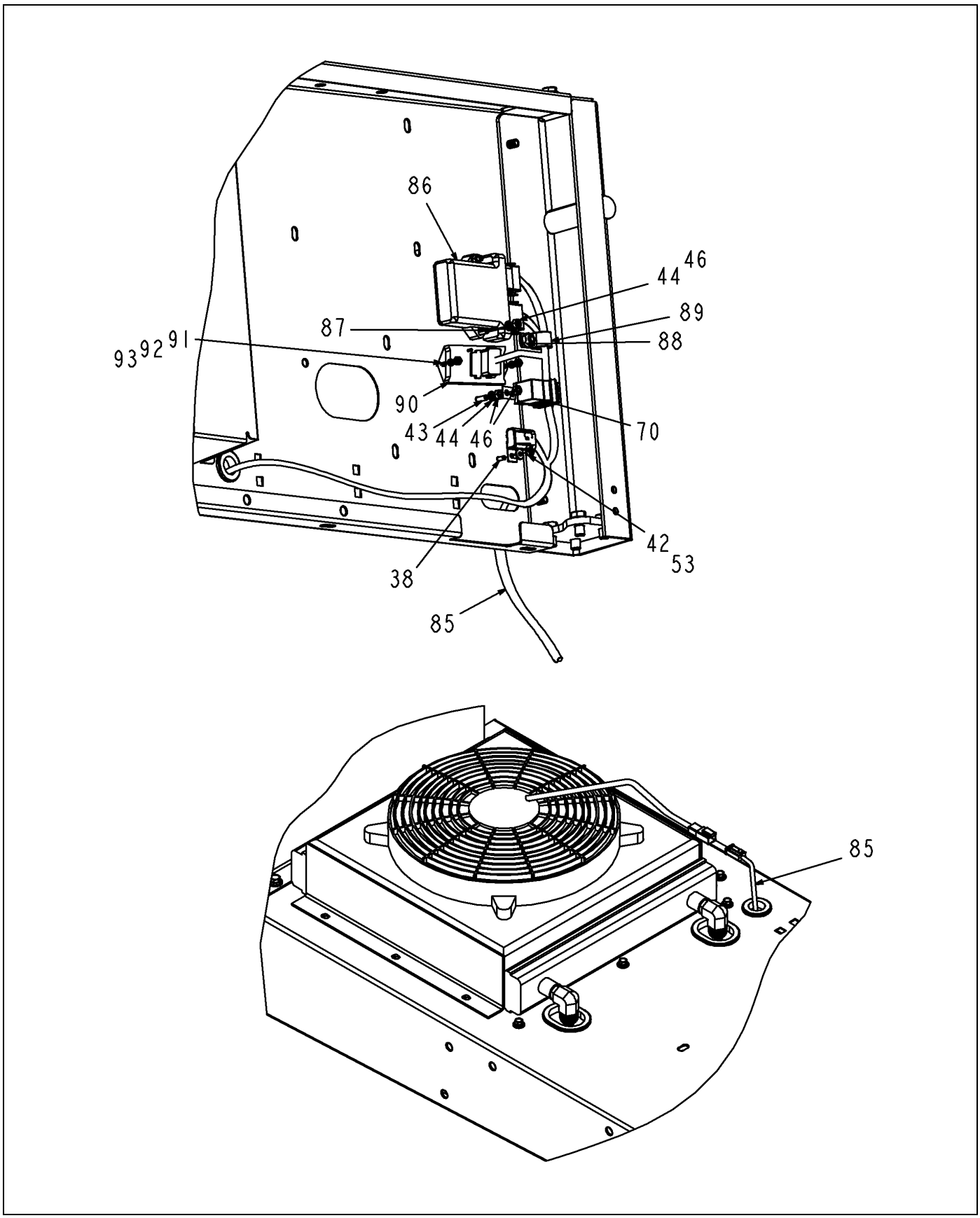

515740D1-03-R485-06.TIF

Copyright © 2007 AGCO Corporation

ITEM	PART #	QTY	DESCRIPTION	COMMENTS
38	AG517975	4	SCREW 10-24NCX0.50 RD HD SS	
42	AG562082	4	WASHER #10 FL SS REG TYPE-B	
43	AG550485	15	BOLT 0.25-20NCX 0.75 G5 ZN HHD	
44	AG550493	17	WASHER 0.25 LK ZN REG	
46	AG550612	24	NUT 0.25-20NC HEX ZN REG	
53	AG027274	4	NUT #10-24NC HEX SS REG NY	
70	6670312	7	SWITCH-MAGNETIC	
85	WR129803	1	HARNESS-I/O,CRUISE CONTROL	
86	WR129804	1	MODULE-I/O,CRUISE CONTROL	
87	AG558788	2	BOLT 0.25-20NCX 1.25 G5 ZN HHD	
88	AG520875	1	NUT-M10-1.5,H,SS,NYLON INS	
89	AG562237	1	CLAMP CTD 0.75IDX0.75WIDE	
90	AG121749	1	MODULE-RELAY,4 PACK,NO	[A]
91	AG562103	2	SCREW RHP #10-24NCX0.50 SS	
92	AG562061	2	NUT #10-24NC HEX SS REG	
93	AG562081	2	WASHER #10 LK SS REG	
	FOOTNOTE [A]		AG719617 - RELAYS (4)	

Copyright © 2007 AGCO Corporation

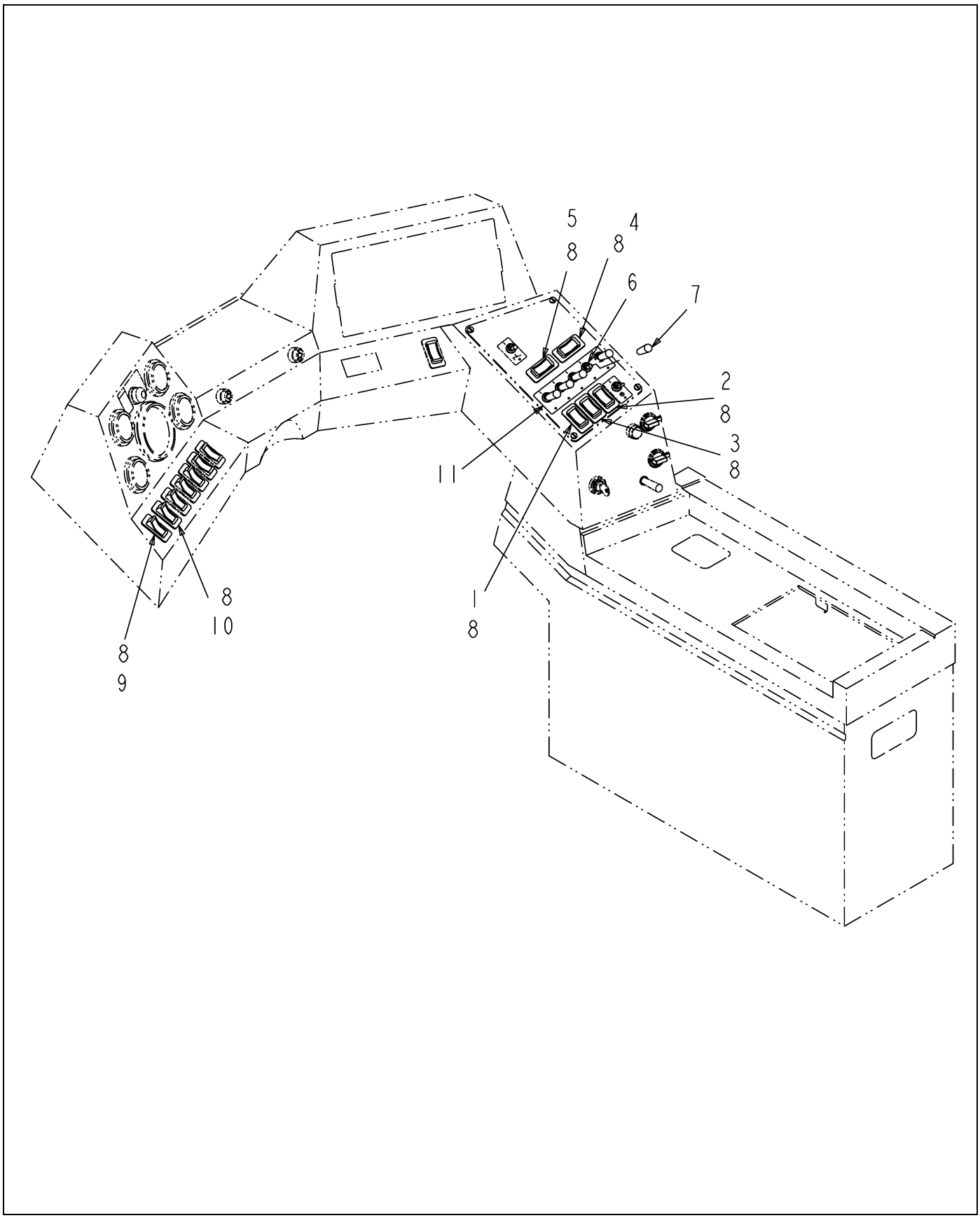

123116-03-N264.TIF

Copyright © 2007 AGCO Corporation

ITEM	PART #	QTY	DESCRIPTION	COMMENTS
1	6597934	1	DECAL-BOOM LIFT (ENG)	
2	6597935	1	DECAL-TIP LIFT,RH (ENG)	
3	6597936	1	DECAL-TIP LIFT,LH (ENG)	
4	6597939	1	DECAL-TIP FOLD,RH (ENG)	
5	6597940	1	DECAL-TIP FOLD,LH (ENG)	
6	6647887	5	SWITCH-TOGGLE,2POS,2X LOCK	
7	6653332	5	EXTENTION-HANDLE	
8	6661253	7	SWITCH-ROCKER	
9	6802446	1	DECAL-TIP FOLD,LH	
10	6802447	1	DECAL-TIP FOLD,RH	
11	WR55852	1	DECAL-BOOM SWITCHES	

Copyright © 2007 AGCO Corporation

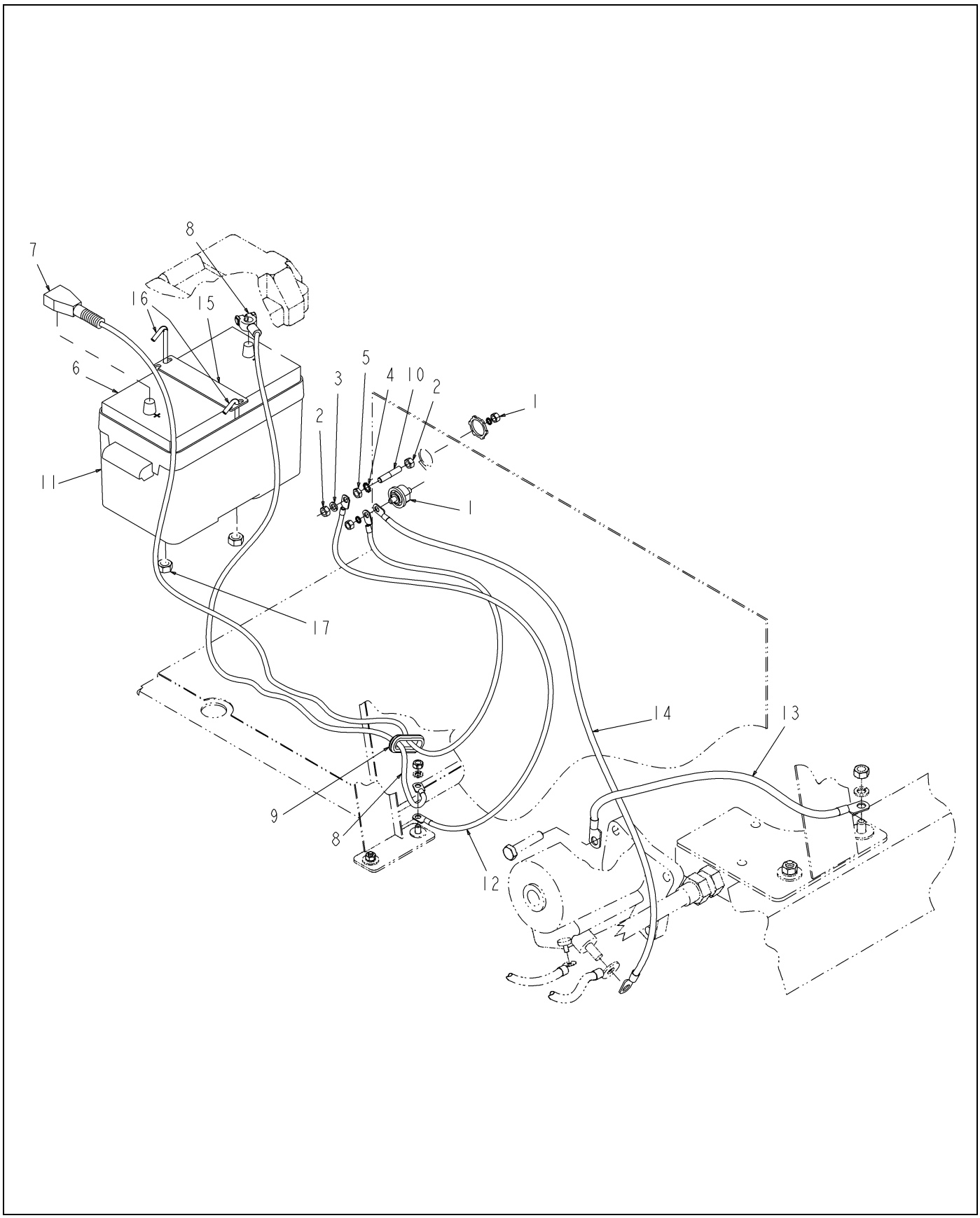

128001-06-R234-.TIF

Copyright © 2007 AGCO Corporation

BATTERY INSTALL

ITEM	PART #	QTY	DESCRIPTION	COMMENTS
1	WR29201	1	TERMINAL-STUD, 3/8	
2	WR50838	2	NUT-HEX,METRIC M10-1.5	
3	WR55106	1	WASHER-LOCK SPRING,10 MM	
4	WR55128	1	WASHER-LOCK EXT TOOTH,	
5	WR55250	1	NUT-LOCK,M10 X 1.5 G4D	
6	AG123761	1	BATTERY-GROUP 31	
7	WR126478	1	CABLE-BATTERY,POSITIVE	
8	WR126479	1	CABLE-BATTERY,NEGATIVE	
9	6533975	1	GROMMET	
10	6539697	1	ROD	
11	6668692	1	HOUSING-BATTERY	
12	6800406	1	CABLE-NEGATIVE	
13	6800407	1	CABLE-NEGATIVE	
14	6800408	1	CABLE ASSY-POSITIVE	
15	6800429	1	PLATE-CLAMP,BATTERY	
16	6801732	2	BOLT-CLAMP,BATTERY	
17	WR36428	2	NUT-HEX,M8,1.25,8.8,ZN,FLGLOCK	

Copyright © 2007 AGCO Corporation

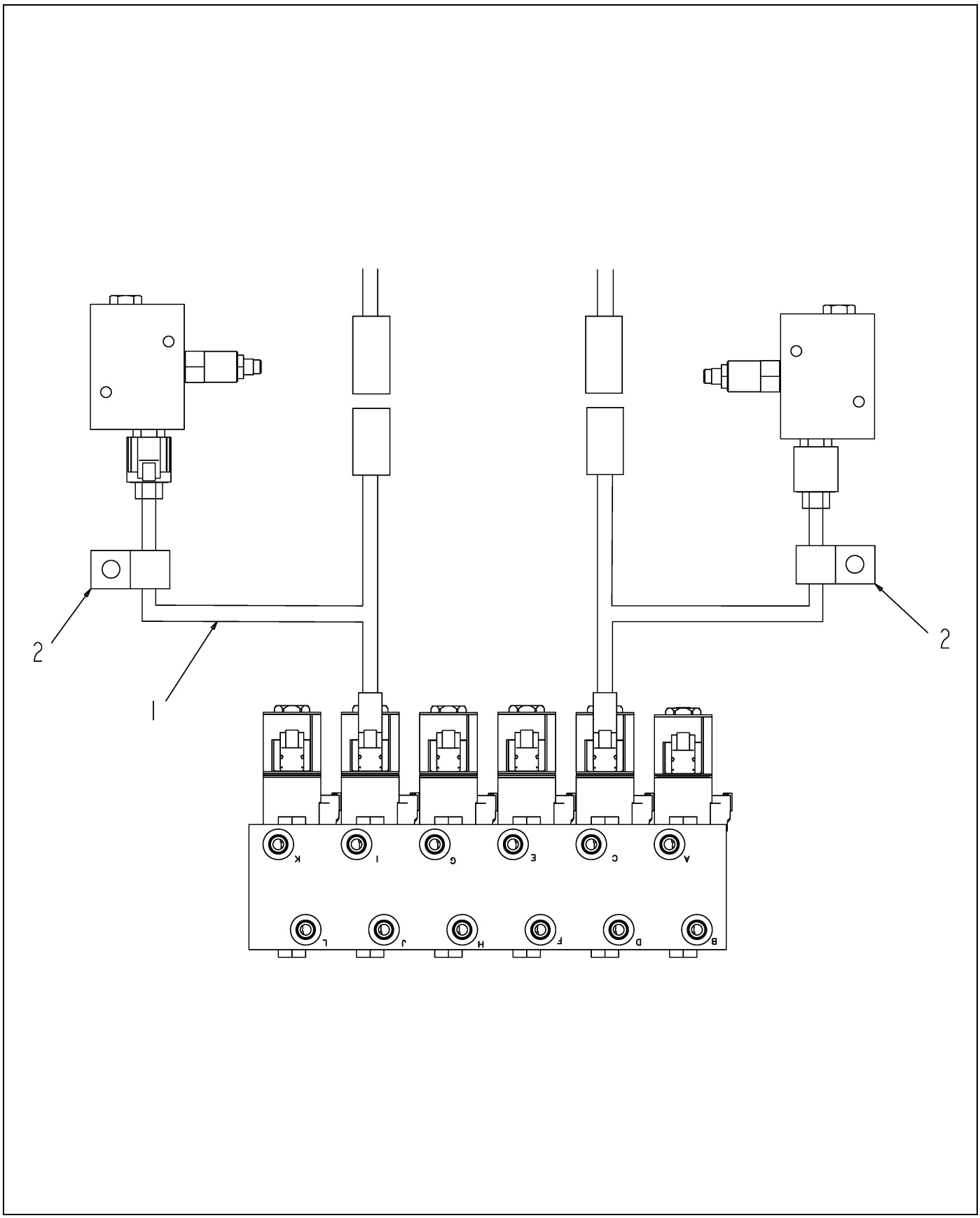

505606D1-02-R125-.TIF

Copyright © 2007 AGCO Corporation

ELECTRICAL INSTL-RELIEF VALVE

ITEM	PART #	QTY	DESCRIPTION	COMMENTS
1	WR134421	2	HARNESS - RELIEF VALVE	
2	WR55229	2	CLAMP-SUPPORT CUSHION,	

Copyright © 2007 AGCO Corporation

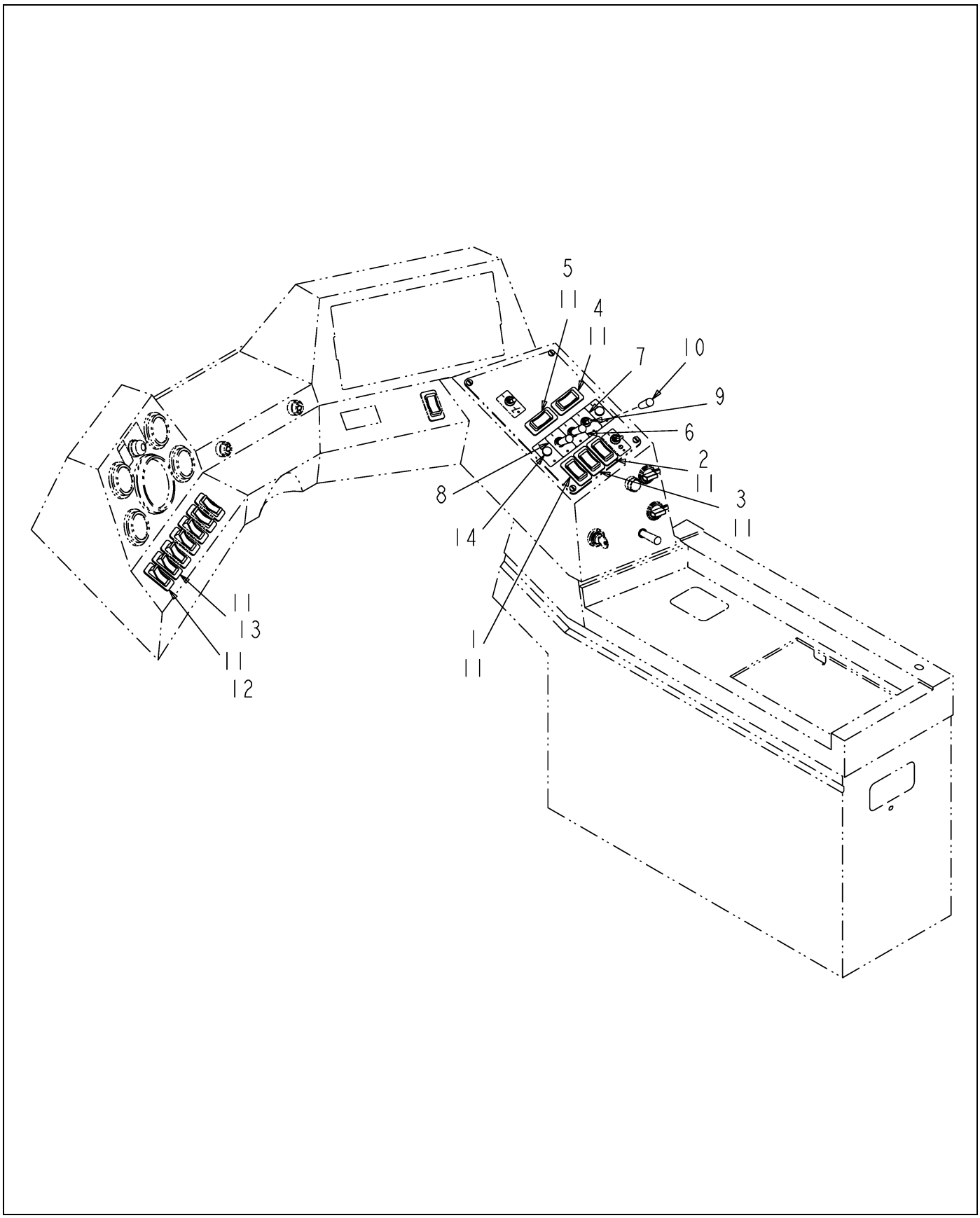

123114-04-N264.TIF

Copyright © 2007 AGCO Corporation

ELECTRICAL INSTL-3 VALVE

ITEM	PART #	QTY	DESCRIPTION	COMMENTS
1	6597934	1	DECAL-BOOM LIFT (ENG)	
2	6597935	1	DECAL-TIP LIFT,RH	
3	6597936	1	DECAL-TIP LIFT,LH (ENG)	
4	6597939	1	DECAL-BOOM FOLD,RH (ENG)	
5	6597940	1	DECAL-BOOM FOLD,LH (ENG)	
6	6597948	1	DECAL-BOOM SPRAY,CNTR	
7	6597949	1	DECAL-BOOM SPRAY,RH (ENG)	
8	6597950	1	DECAL-BOOM SPRAY,LH (ENG)	
9	6647887	3	SWITCH-ELECTRIC	
10	6653332	3	EXTENSION-HANDLE	
11	6661253	7	SWITCH-ROCKER	
12	6802446	1	DECAL-LT,TIP FOLD	
13	6802447	1	DECAL-TIP FOLD,RH	
14	WR37581	2	PLUG-CAP,.50 BLK PLASTIC	

Copyright © 2007 AGCO Corporation

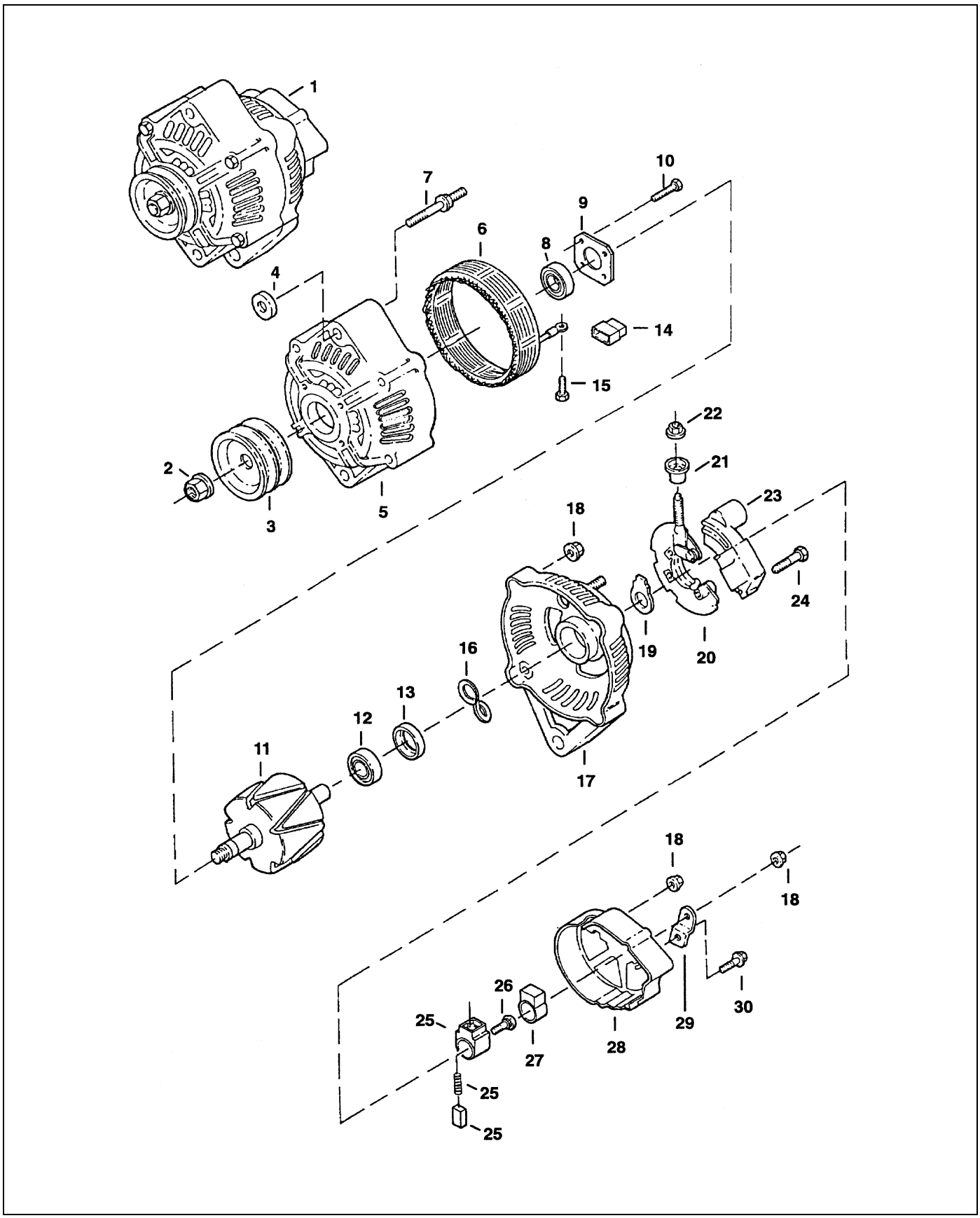

126509.TIF

Copyright © 2007 AGCO Corporation

ALTERNATOR,140 AMP-2 GROOVE

ITEM	PART #	QTY	DESCRIPTION	COMMENTS
6	6672969	1	STATOR	
8	6672970	8	BEARING	
11	6672971	1	ROTOR	
12	6672972	1	BEARING	
20	6672973	1	HOLDER	
23	6672974	1	REGULATOR	
25	6672975	1	HOLDER	
	FOOTNOTE		ITEMS 2,4,5,7,9,10,13-19,21,22,24,26-30 CANNOT BE PURCHASED INDIVIDUALLY BUT ARE INCLUDED IN THE ALTERNATOR.	

Copyright © 2007 AGCO Corporation

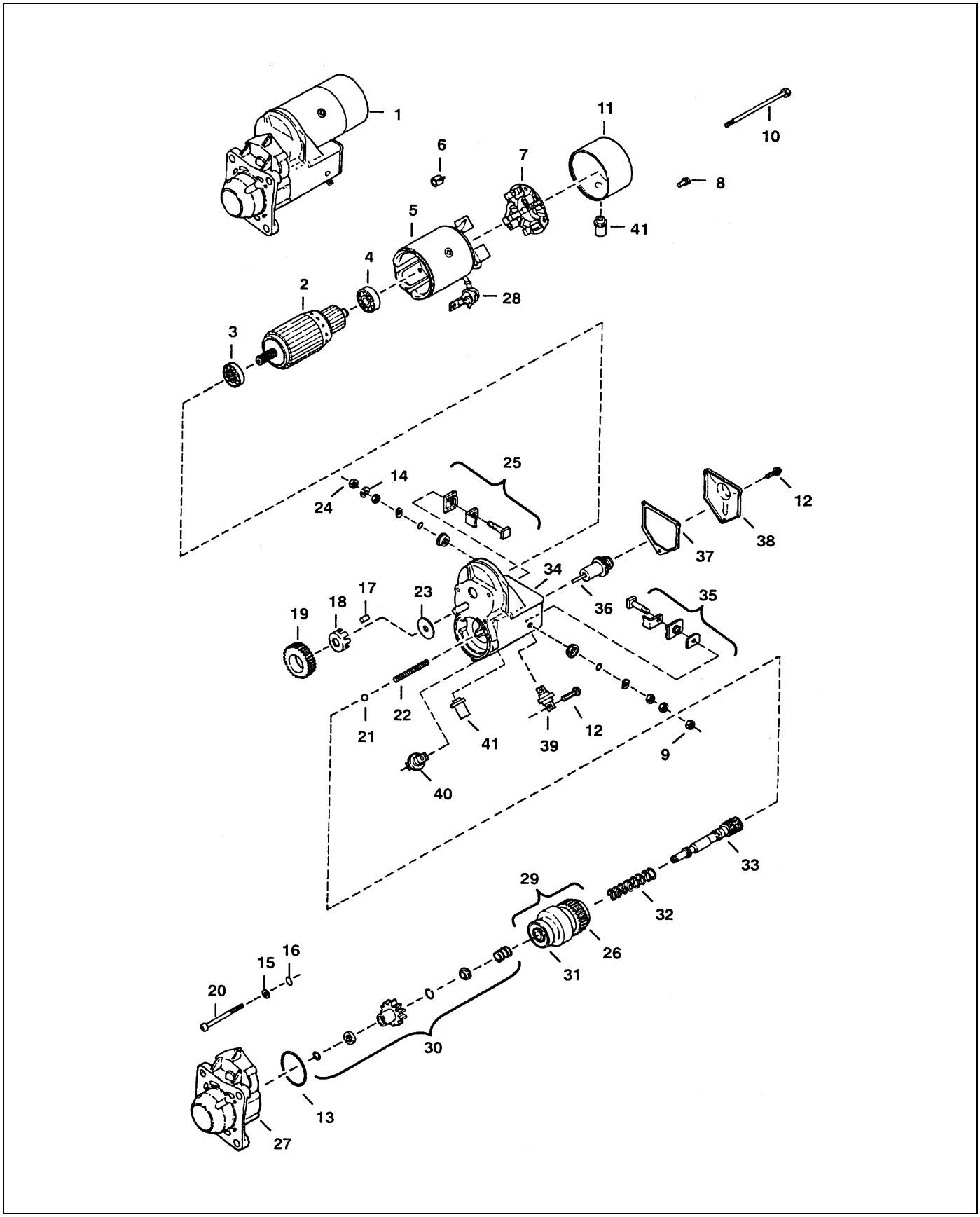

6665654.TIF

Copyright © 2007 AGCO Corporation

ITEM	PART #	QTY	DESCRIPTION	COMMENTS
2	6666621	1	ARMATURE	
3	6632417	1	BEARING	
4	6632418	1	BEARING	
5	6632419	1	HOUSING ASSEMBLY	
6	6632421	4	SPRING	
7	6632420	1	BRUSH HOLDER	
8	6666634	2	BOLT	
9	6666637	1	NUT	
10	6666636	2	BOLT	
11	6671121	1	COVER	
12	6666635	1	BOLT	
13	6666632	1	O-RING	
14	6666630	1	WASHER	
15	6666629	3	WASHER	
16	6666631	3	O-RING	
17	6632430	5	ROLLER	
18	6632429	1	RETAINER	
19	6632428	1	PINION	
20	6666633	3	BOLT	
21	6671122	3	BALL	
22	6632436	1	SPRING	
23	6662437	1	WASHER	
24	6666628	1	NUT	
25	6671117	1	TERMINALS	
26	6666622	1	DRIVE	
27	6671124	1	HOUSING	
28	6669365	1	BOOT	
30	6669350	1	PINION	
32	6632441	1	SPRING	
33	6669354	1	SHAFT	
34	6671973	1	HOUSING	
35	6671116	1	TERMINALS	
36	6632432	1	PLUNGER	
37	6632433	1	GASKET	
38	6632434	1	COVER	
39	6669359	1	TERMINAL	
40	6669360	1	BUSHING	
41	6669372	1	COVER	
	FOOTNOTE		ITEM 1: MOTOR-STARTER COMPLETE	
	FOOTNOTE		ITEM 31 CANNOT BE PURCHASED INDIVIDUALLY BUT IS INCLUDED IN HOUSING.	

Copyright © 2007 AGCO Corporation

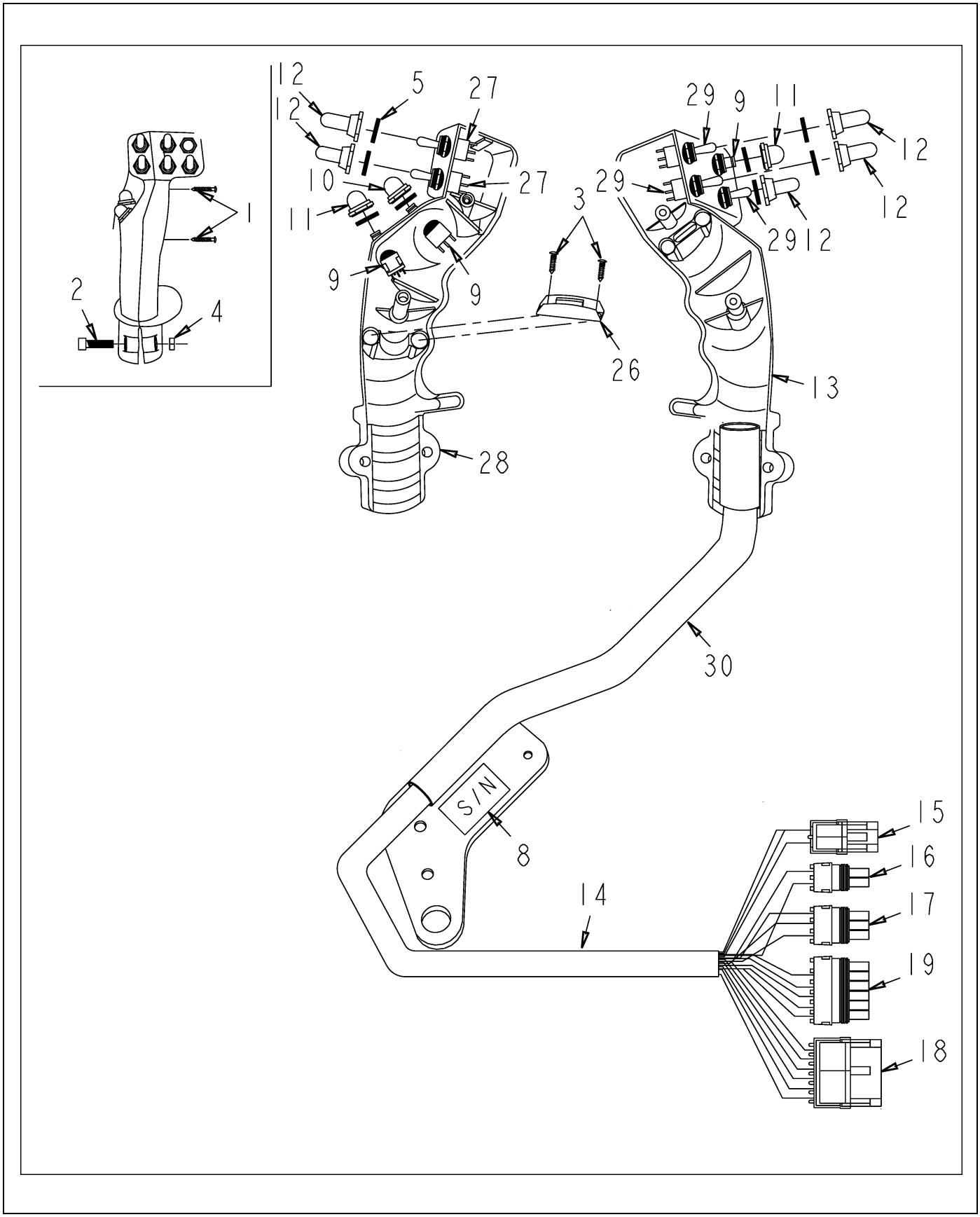

511993D1-02-N778-.TIF

Copyright © 2007 AGCO Corporation

THROTTLE HANDLE ASM

ITEM	PART #	QTY	DESCRIPTION	COMMENTS
1	AG715740	2	SCREW 6X1	
2	AG715748	2	SCREW SOCKET CAP BLACK	
3	AG715738	2	SCREW 18X.05	
4	AG715749	2	NUT HEX 5MM	
5	6670543	8	NUT	
6	6670544	3	TIE	
9	6670546	3	SWITCH	
10	6670548	1	BOOT	
11	AG331380	2	SW/PB BOOT 15/32 YEL	
12	6670551	5	BOOT	
13	AG715736	1	ENCL RCS RIGHT	
15	AG515850	1	CONNECTOR ELEC SHROUD 2-CONT F	
16	AG515851	1	CONNECTOR ELEC TOWER 2-CONT M	
17	AG515919	1	CONNECTOR ELEC TOWER 3-CONT M	
18	AG515760	1	CONNECTOR ELEC SHROUD 6-CONT F	
19	AG515761	1	CONNECTOR ELEC TOWER 6-CONT M	
20	AG517466	7	TERM MA 20-18 GA W/PACK	
21	AG517467	10	TERM FE 20-18 GA W/PACK	
22	AG515762	1	TERM MA 16-14 GA W/PACK	
23	AG515764	17	SEAL CABLE GREEN REEL 18-16 GA	
24	AG515766	1	CAVITY PLUG	
25	AG515765	1	SEAL CABLE GREY REEL 14 GA	
26	AG715737	1	LOOM CLAMP RCS HANDLE	
27	6670550	2	SWITCH	
28	AG331381	1	ENCL/RCS LEFT NOTCHED	
29	6670550	3	SWITCH	
30	WR129597	1	HANDLE WLDMT-JOYSTICK	

Copyright © 2007 AGCO Corporation

HEADLIGHT ASM-WIRING,LH 11-1
HEADLIGHT ASM-WIRING, RH 11-2
LAMP CLUSTER REAR RH 11-3
LAMP CLUSTER REAR LH 11-4
F/A FLOODLIGHT KIT 11-5
WORK LIGHT 11-6
F/A FLOODLIGHT KIT,HID 11-7
LIGHT-WORK,HID 11-8

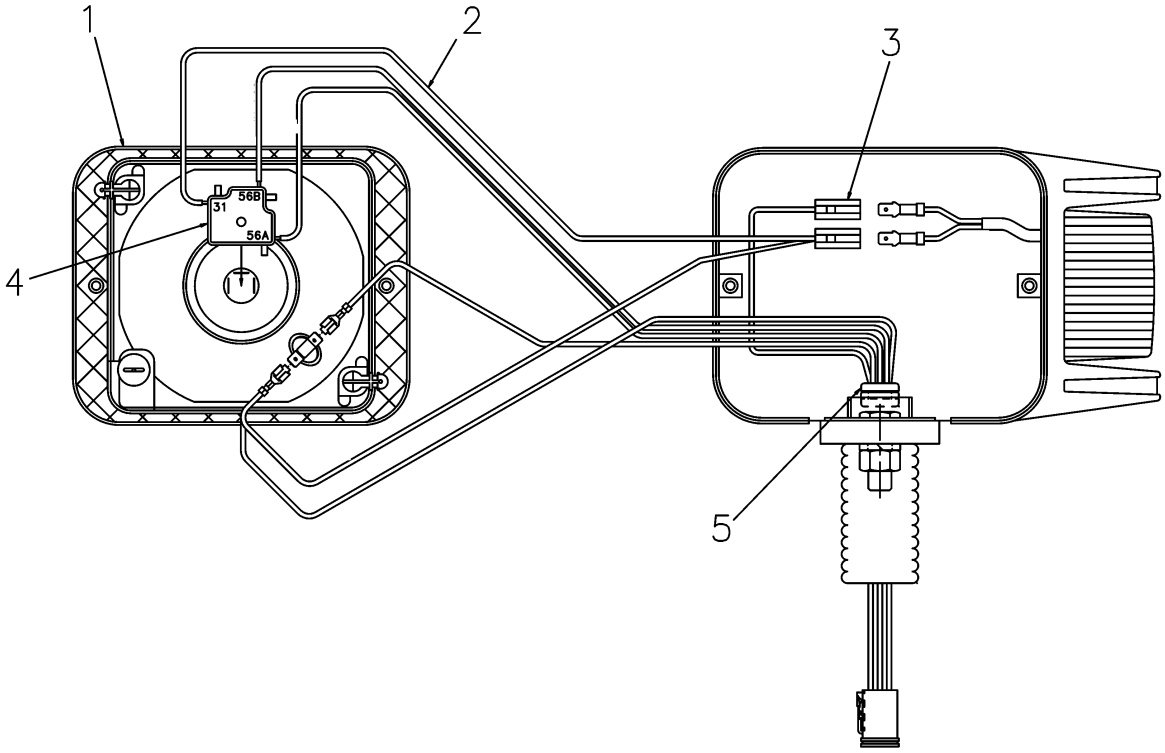

420939-B.TIF

Copyright © 2007 AGCO Corporation

HEADLIGHT ASM-WIRING,LH

ITEM	PART #	QTY	DESCRIPTION	COMMENTS
1	AG519211	1	HEADLIGHT-LEFT,HELLA	
2	AG420779	1	HARNESS-HEADLIGHT	
3	AG515203	2	BODY CONNECTOR MALE 1-CONTACT	
4	AG609486	1	HEADLAMP CONNECTOR 517372	
5	AG518038	1	GROMMET INSULATION 0.50 ID	

Copyright © 2007 AGCO Corporation

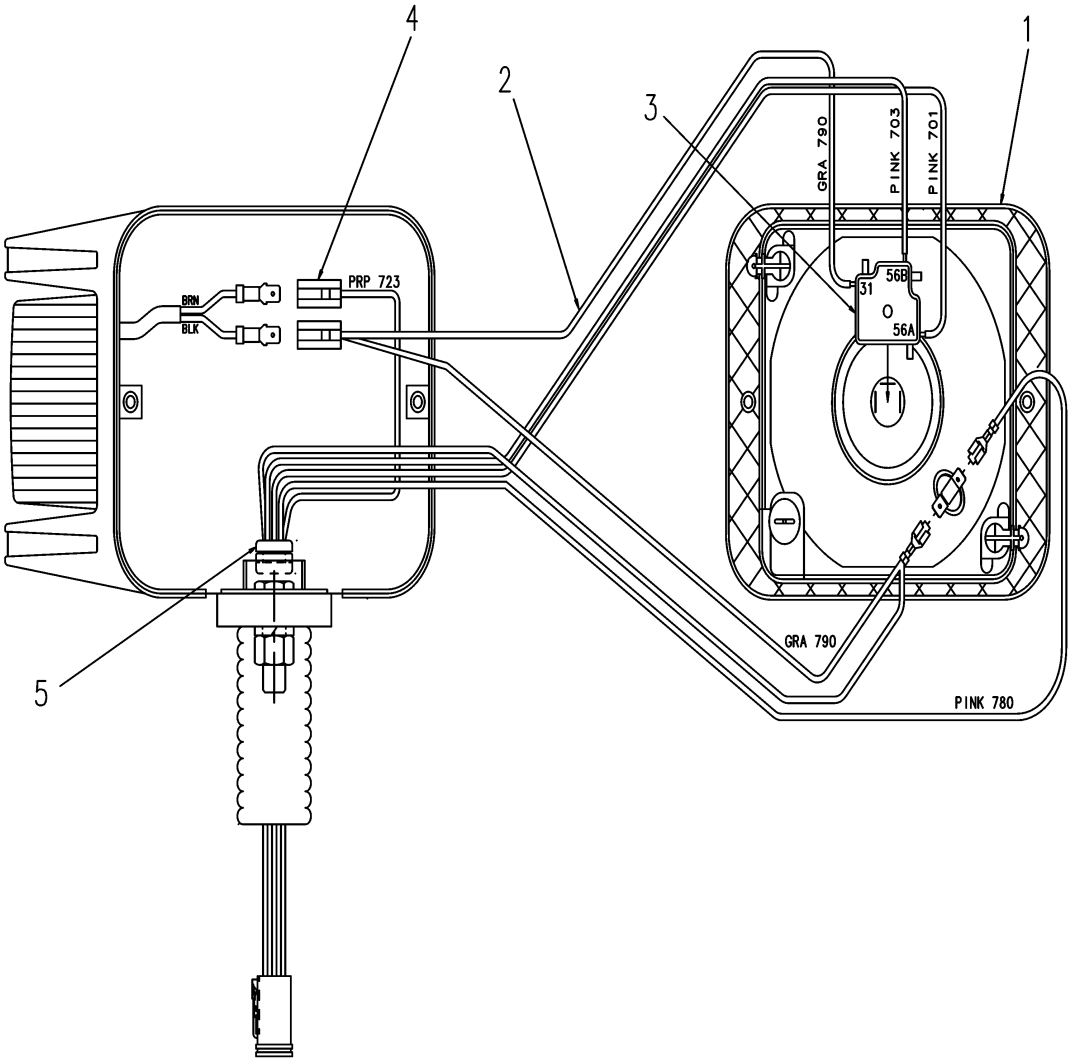

420940-B.TIF

Copyright © 2007 AGCO Corporation

HEADLIGHT ASM-WIRING, RH

ITEM	PART #	QTY	DESCRIPTION	COMMENTS
1	AG519210	1	HEADLIGHT-RIGHT,HELLA	
2	AG420779	1	HARNESS-HEADLIGHT	
3	AG609486	1	HEADLAMP CONNECTOR 517372	
4	AG515203	2	BODY CONNECTOR MALE 1-CONTACT	
5	AG518038	1	GROMMET INSULATION 0.50 ID	

Copyright © 2007 AGCO Corporation

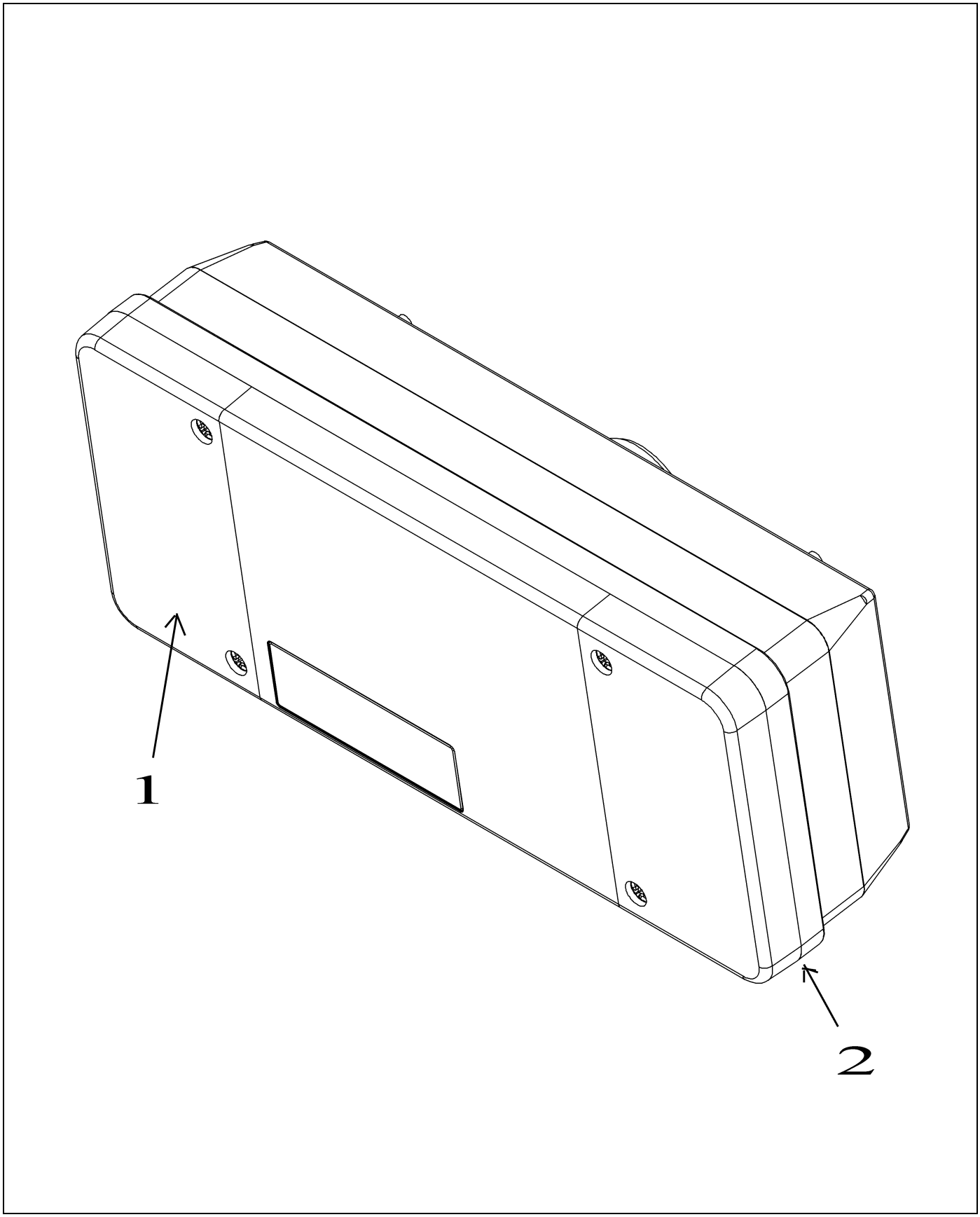

516567.TIF

Copyright © 2007 AGCO Corporation

LAMP CLUSTER REAR RH

ITEM	PART #	QTY	DESCRIPTION	COMMENTS
REF	AG562793	1	NUT HEX M6 X 1.00	
REF	AG834159	1	BULB (516567-516568) 12-5W	
REF	AG714828	1	BULB 12V 21W	
REF	AG562327	1	BOLT M6-1.00X20MM G8.8 ZN HHD	
REF	AG515122	1	WASHER 0.25 LK SS REG	
1	AG711448	1	LENS RH 516567	
2	AG719528	1	LENS GASKET (516567&516568)	

Copyright © 2007 AGCO Corporation

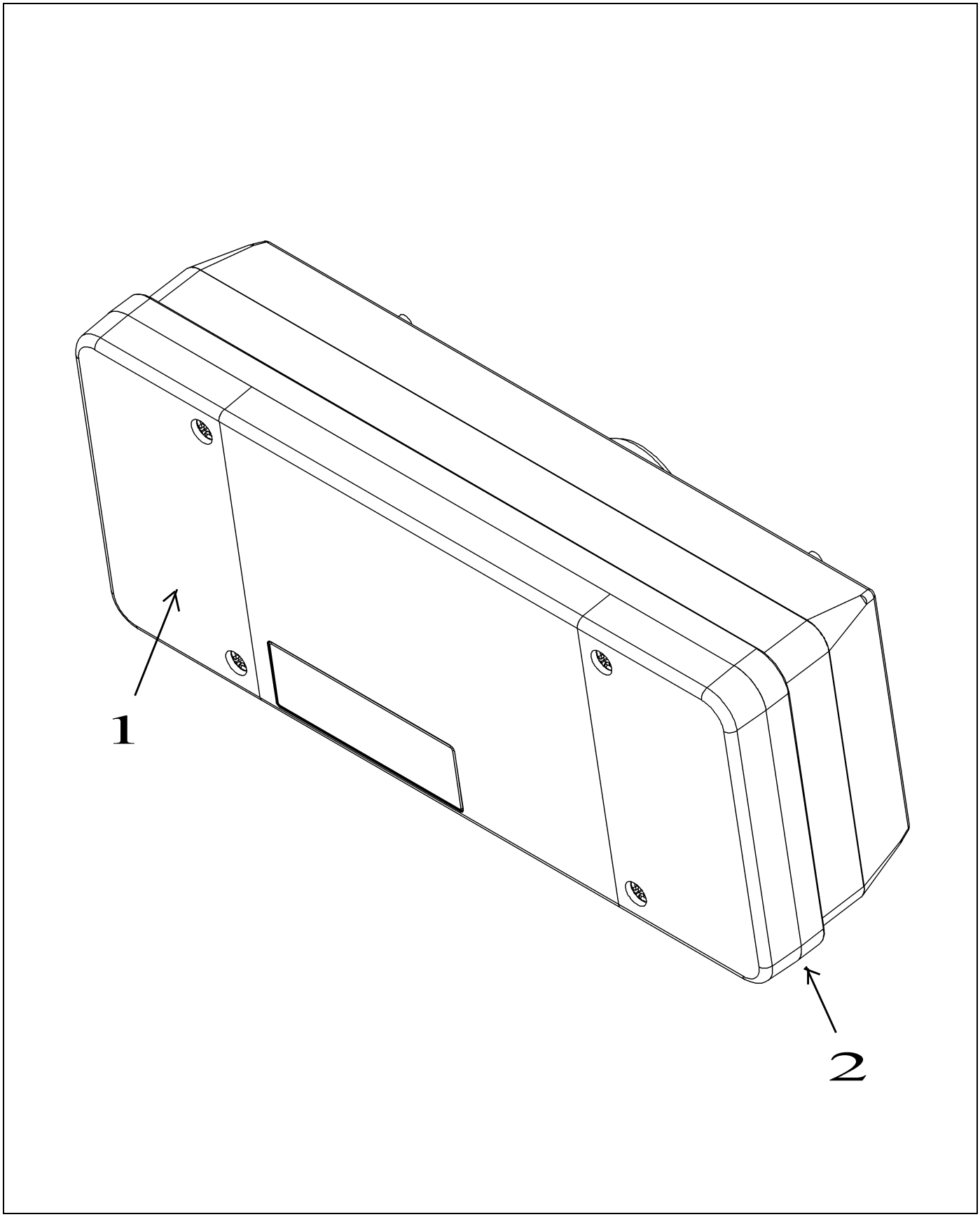

516568.TIF

Copyright © 2007 AGCO Corporation

LAMP CLUSTER REAR LH

ITEM	PART #	QTY	DESCRIPTION	COMMENTS
REF	AG562793	1	NUT HEX M6 X 1.00	
REF	AG834159	1	BULB (516567-516568) 12-5W	
REF	AG714828	1	BULB 12V 21W	
REF	AG562327	1	BOLT M6-1.00X20MM G8.8 ZN HHD	
REF	AG515122	1	WASHER 0.25 LK SS REG	
1	AG711448	1	LENS RH 516567	
2	AG719528	1	LENS GASKET (516567&516568)	

Copyright © 2007 AGCO Corporation

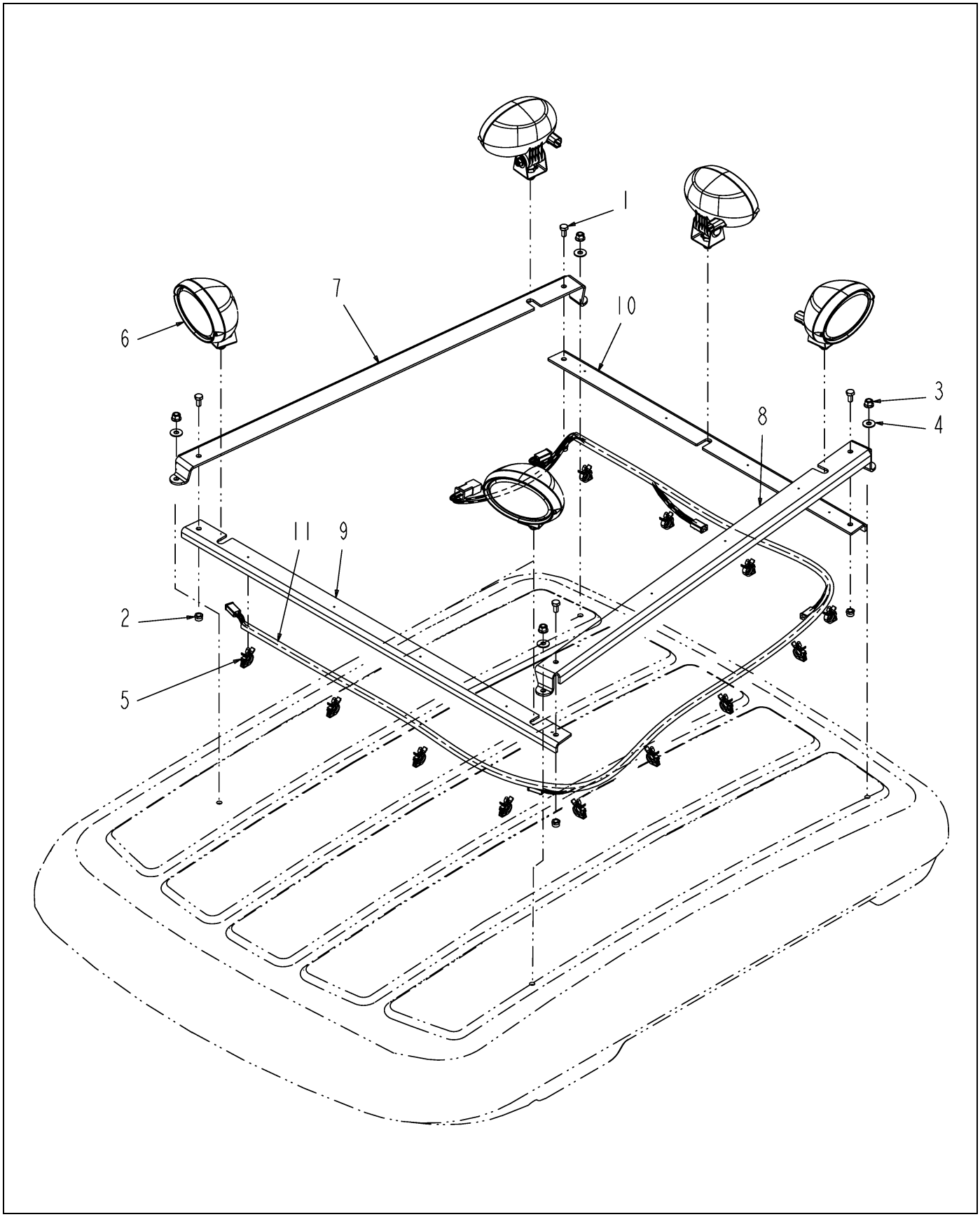

515439D1-02-R047-.TIF

Copyright © 2007 AGCO Corporation

F/A FLOODLIGHT KIT

ITEM	PART #	QTY	DESCRIPTION	COMMENTS
1	WR25752	4	SCREW-CAP HEX M8 X 16,	
2	WR32254	4	NUT-TOPLOCK,M8-1.25	
3	WR55352	4	NUT-TOPLOCK,5/16-18UNC G8	
4	AG551015	4	WASHER 0.31 FL ZN REG TYPE-B	
5	6630585	12	CLIP-CONDUIT	
6	505081D1	5	WORK LIGHT	SEE PAGE 11-6
7	506243D1	1	BAR-LIGHT,RH	
8	506244D1	1	BAR-LIGHT,LH	
9	506245D1	1	BAR-LIGHT,FRONT	
10	506246D1	1	BAR-LIGHT,REAR	
11	515441D1	1	HARNESS-LIGHT BAR	
12	516881D1	2	INSTR-MFG,FLOODLIGHT	
13	516882D1	2	SHIPPING CRATE	

Copyright © 2007 AGCO Corporation

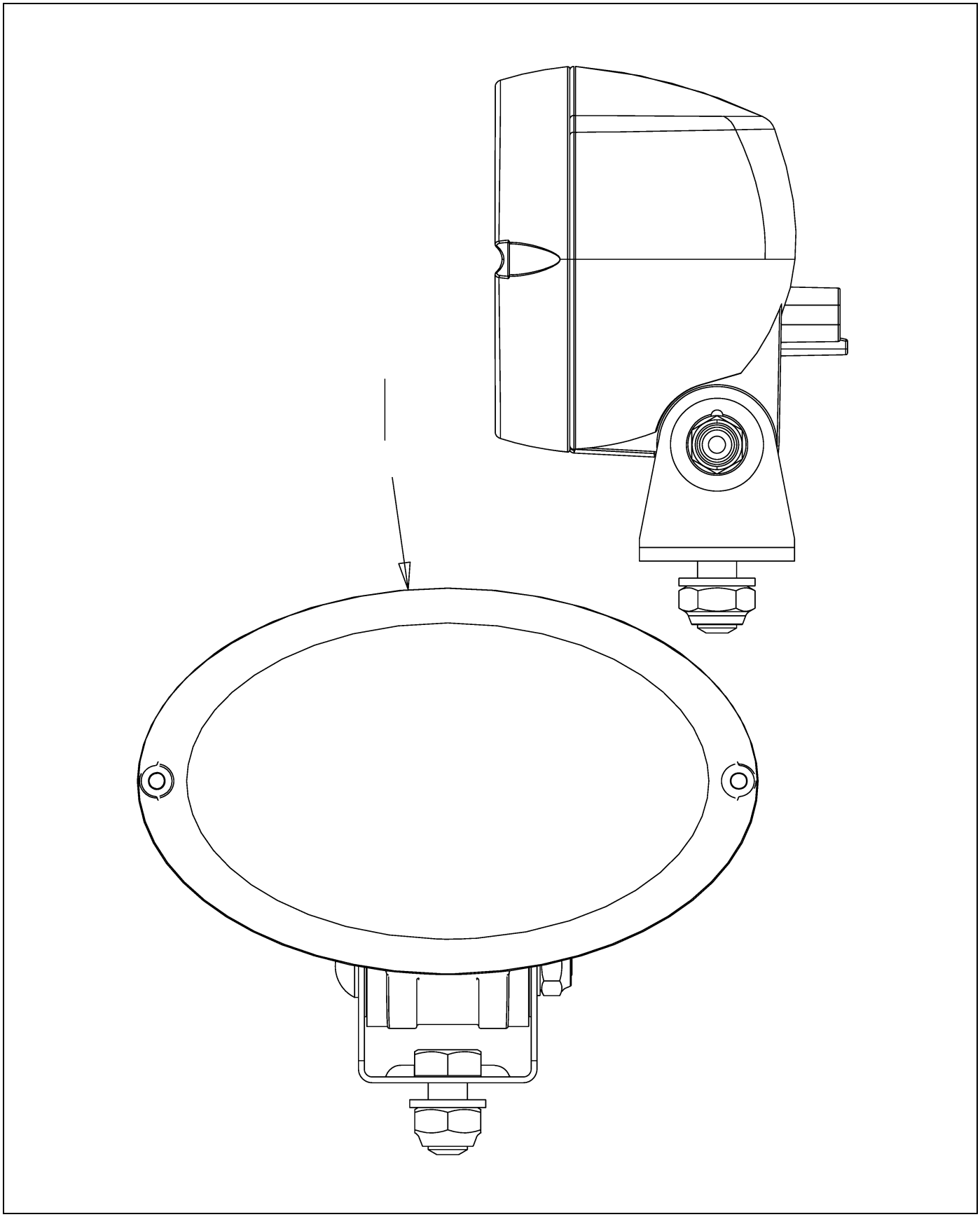

505081D1-03-N296-.TIF

Copyright © 2007 AGCO Corporation

WORK LIGHT

ITEM	PART #	QTY	DESCRIPTION	COMMENTS
1	505082D1	1	WORK LIGHT	

Copyright © 2007 AGCO Corporation

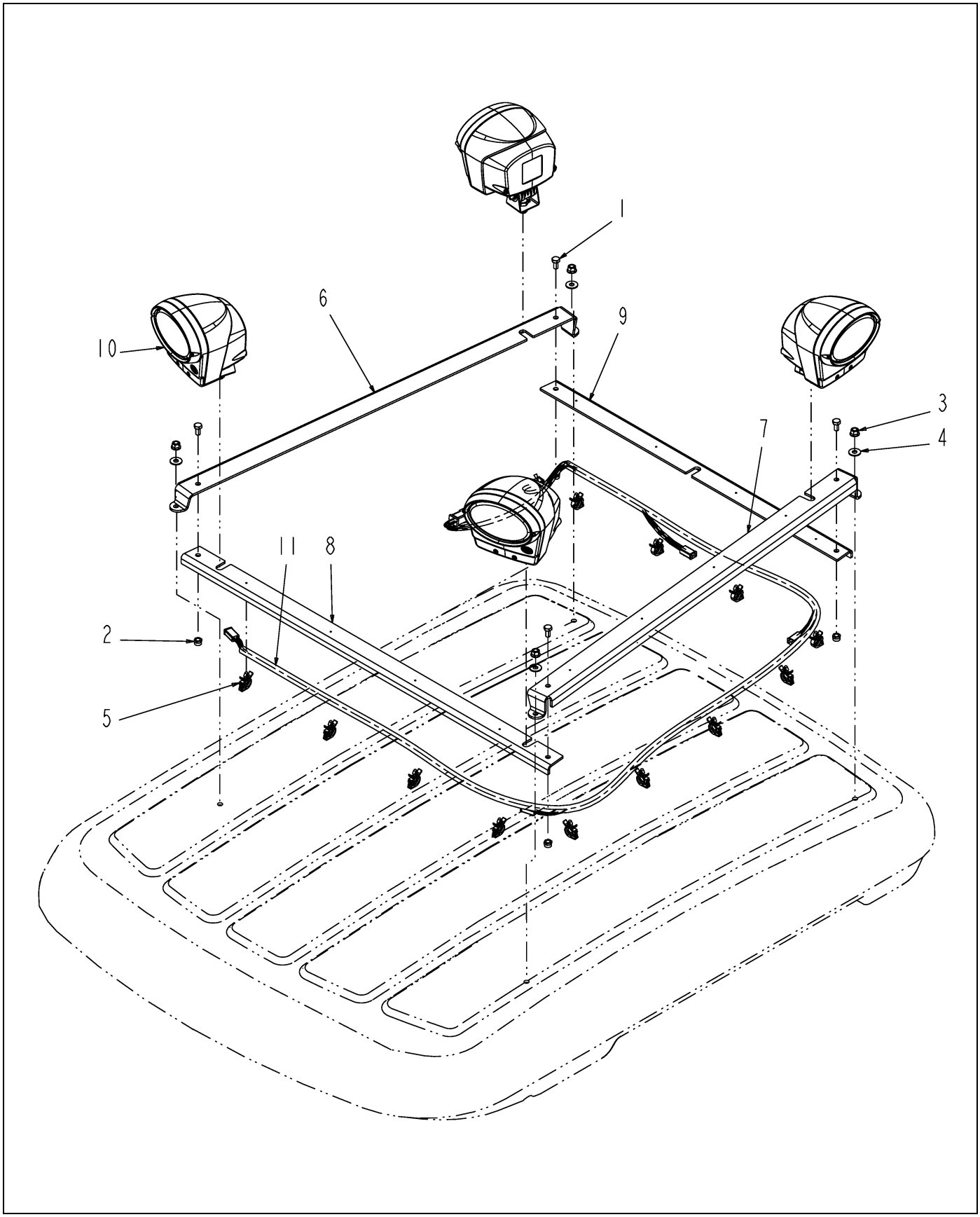

515440D1-02-R047-.TIF

Copyright © 2007 AGCO Corporation

F/A FLOODLIGHT KIT,HID

ITEM	PART #	QTY	DESCRIPTION	COMMENTS
1	WR25752	4	SCREW-CAP HEX M8 X 16,	
2	WR32254	4	NUT-TOPLOCK,M8-1.25	
3	WR55352	4	NUT-TOPLOCK,5/16-18UNC G8	
4	AG551015	4	WASHER 0.31 FL ZN REG TYPE-B	
5	6630585	12	CLIP-CONDUIT	
6	506243D1	1	BAR-LIGHT,RH	
7	506244D1	1	BAR-LIGHT,LH	
8	506245D1	1	BAR-LIGHT,FRONT	
9	506246D1	1	BAR-LIGHT,REAR	
10	509644D1	1	LIGHT-WORK,HID	SEE PAGE 11-8
11	515441D1	1	HARNESS-LIGHT BAR	
12	516881D1	1	INSTR-MFG,FLOODLIGHT	
13	516882D1	1	SHIPPING CRATE	

Copyright © 2007 AGCO Corporation

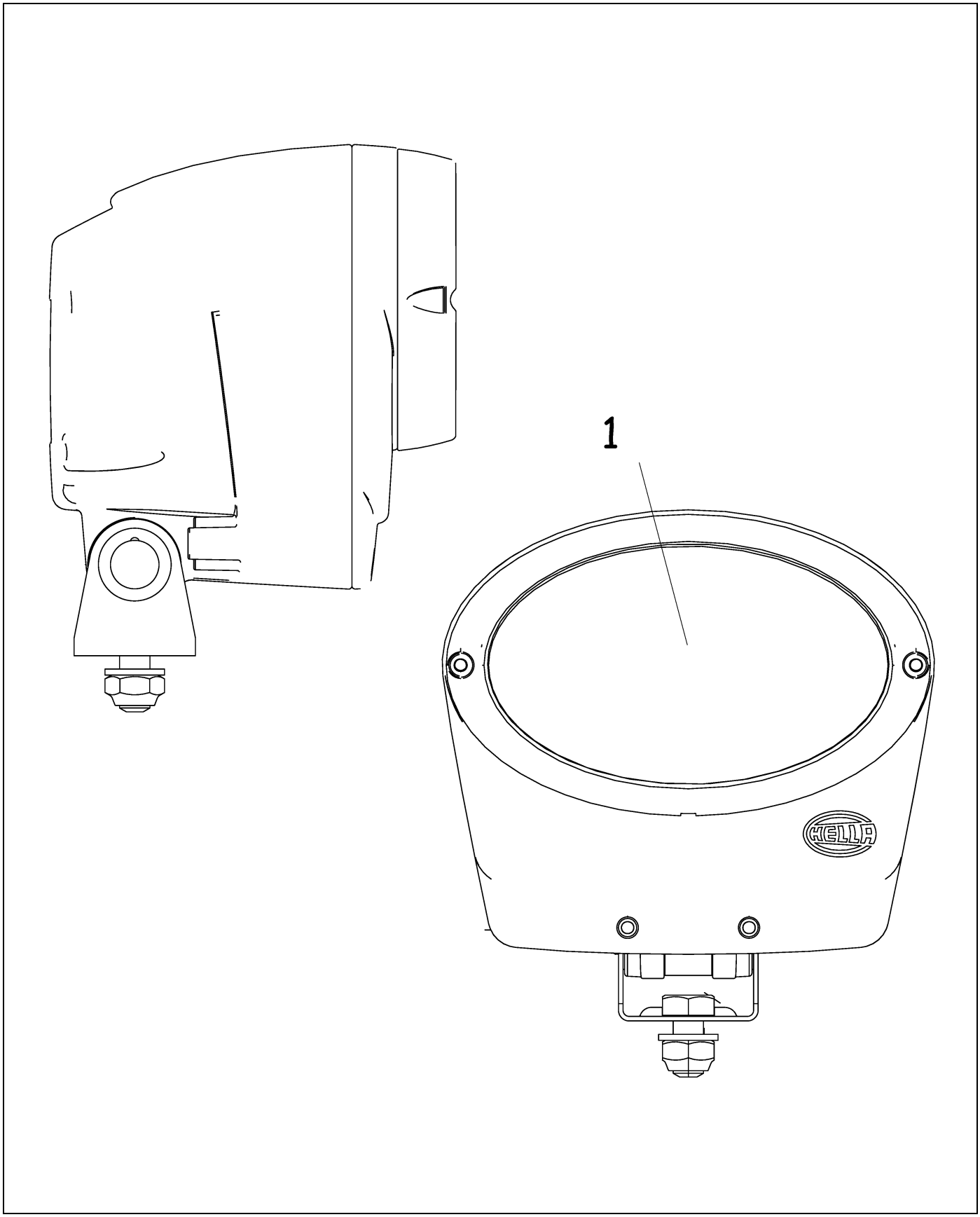

509644D1-02-N441-.TIF

Copyright © 2007 AGCO Corporation

LIGHT-WORK,HID

ITEM	PART #	QTY	DESCRIPTION	COMMENTS
1	136-5598	1	BULB-HID	

Copyright © 2007 AGCO Corporation

HOOD INSTL - CHAL 12-1
HOOD INSTL - CHAL 12-2
HOOD INSTL - CHAL 12-3
HOOD ASM - CHAL 12-4
HOOD ASM - CHAL 12-5
HOOD ASM - CHAL 12-6

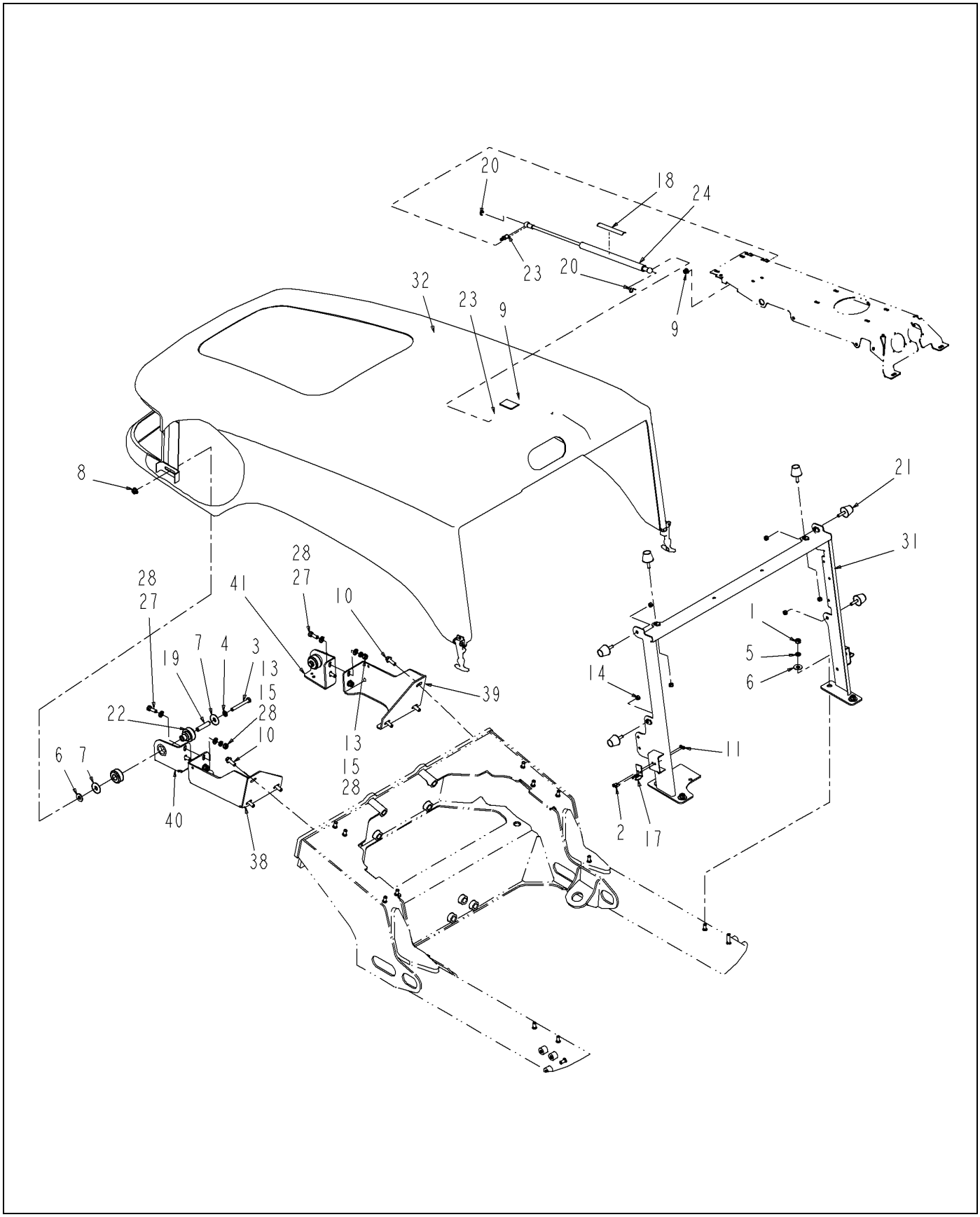

520091D1-01-N965-01.TIF

Copyright © 2007 AGCO Corporation

HOOD INSTL - CHAL

ITEM	PART #	QTY	DESCRIPTION	COMMENTS
1	WR50838	4	NUT-HEX,METRIC M10-1.5	
2	WR55026	4	SCREW-CAP HEX M5 X 12	
3	WR55052	2	SCREW-CAP HEX M10 X 80	
4	WR55075	2	WASHER-FL,M10,ZN,REG	
5	WR55106	4	WASHER-LOCK SPRING,10 MM	
6	WR55158	6	WASHER-FLAT,10MM ID,	
7	WR55159	4	WASHER-FLAT,12MM ID,	
8	WR55301	2	NUT-FLANGE,M10 X 1.5,PREV	
9	WR55352	2	NUT-TOPLOCK,5/16-18UNC G8	
10	WR55404	6	SCREW-CAP HEX M10 X 30,	
11	WR55412	4	NUT-LOCK,M5 X .8,PREV	
13	AG522218	4	NUT-M10-1.5,CL10,ZN,H,REG	
14	AG550213	6	NUT 0.31-18NC HEX ZN REG	
15	AG562271	4	WASHER M10 LK ZN REG	
17	1545623	2	KEEPER	
18	6577754	1	DECAL-WARNING	
19	6596456	2	BUSHING-HINGE	
20	6646598	2	CLIP-STUD	
21	6649040	6	BUMPER-RUBBER	
22	6661194	2	MOUNT-RUBBER	
23	6661632	2	STUD	
24	6667999	1	SPRING-GAS	
27	400058X1	4	BOLT-M10X1.5X30 ZNDI HHD 10.9	
28	400287X1	8	WASHER-HARD 11IDX21ODX2.5 ZND1	
31	505215D1	1	WELDMENT-SUPPORT,HOOD,REAR	
32	507034D1	1	HOOD AEM - CHAL	SEE PAGE 12-4
38	514430D1	1	BRACKET-HOOD MOUNT,BACK,LH	
39	514431D1	1	BRACKET-HOOD MOUNT,BACK,BH	
40	514432D1	1	HINGE WLDMT-HOOD,LH	
41	514433D1	1	HINGE WLDMT-HOOD,RH	

Copyright © 2007 AGCO Corporation

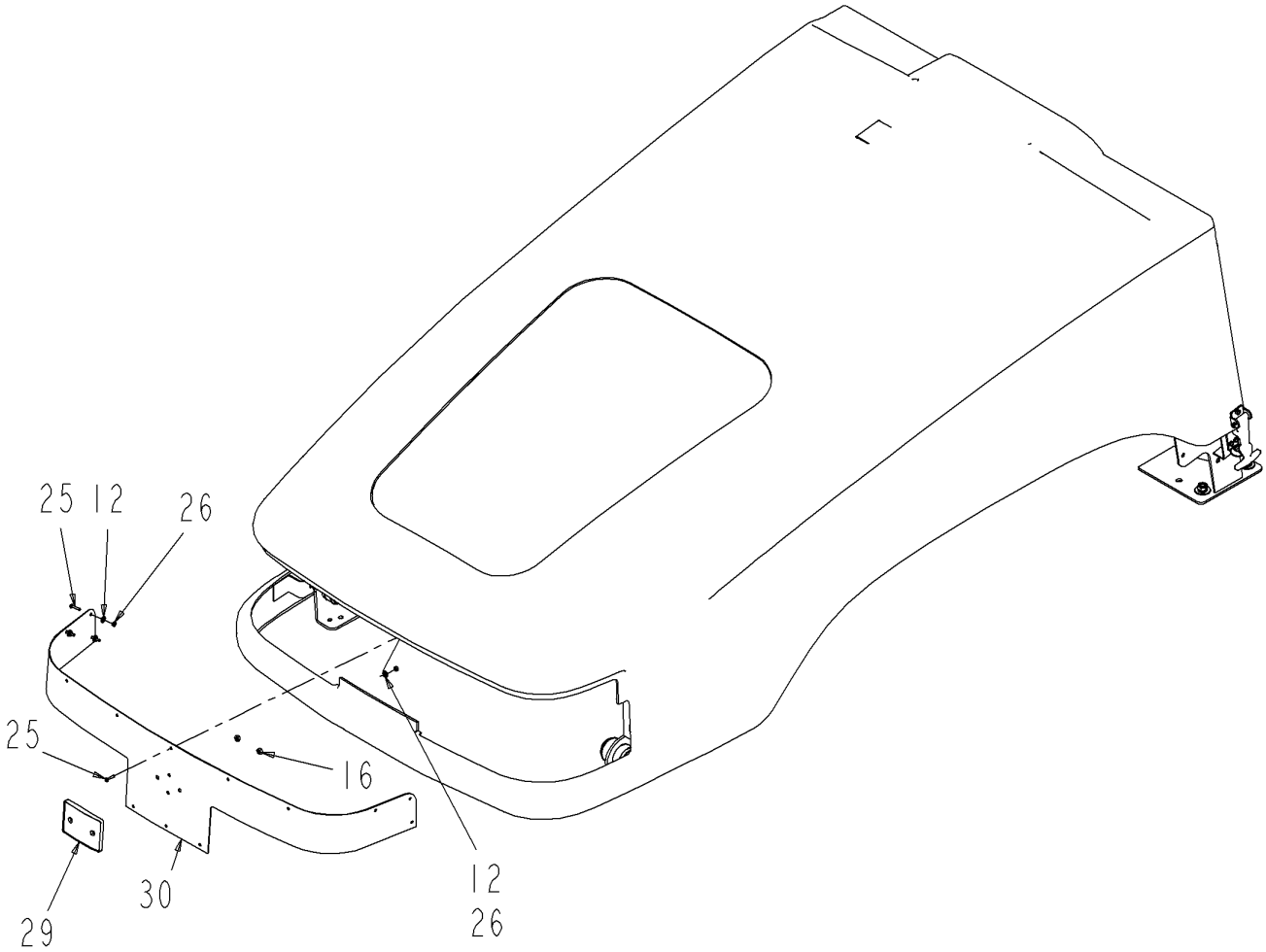

520091D1-01-N965-02.TIF

Copyright © 2007 AGCO Corporation

ITEM	PART #	QTY	DESCRIPTION	COMMENTS
12	AG517158	14	WASHER #6 FL ZN REG TYPE-B	
16	AG713398	2	LOCK NUT M6	
25	700710188	14	6-32 X 3/4 PHIL PAN M/S SS	
26	700710189	14	6-32 MACHINE SCREW NYLON INSER	
29	4274275M91	1	LOGO CHALLENGER	
30	504071D1	1	GRILL-SCREEN	

Copyright © 2007 AGCO Corporation

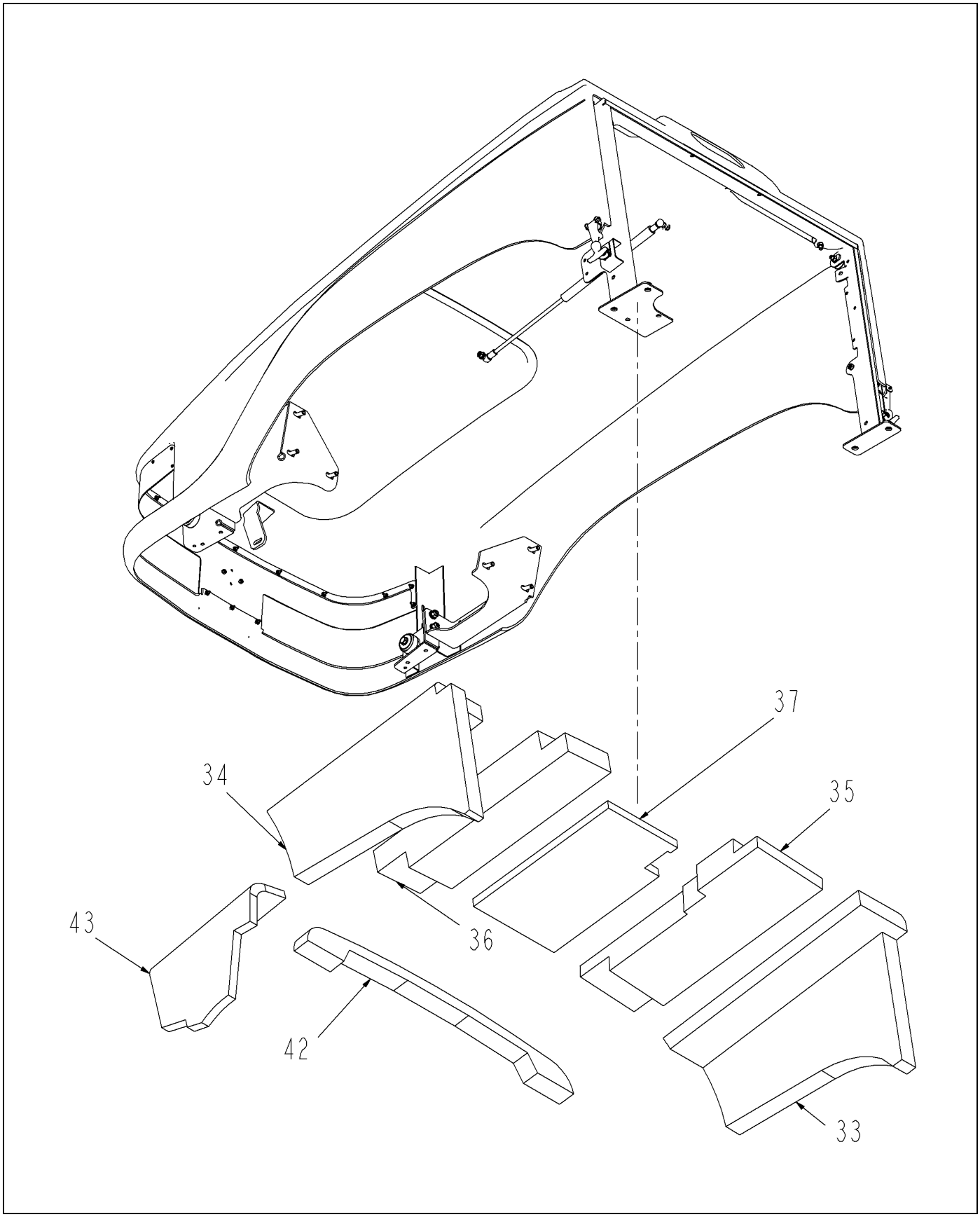

520091D1-01-N965-03.TIF

Copyright © 2007 AGCO Corporation

ITEM	PART #	QTY	DESCRIPTION	COMMENTS
33	508542D1	1	PANEL, RH HOOD SIDE	
34	508543D1	1	PANEL, LH HOOD SIDE	
35	508544D1	1	PANEL, RH TOP HOOD	
36	508545D1	1	PANEL, LH TOP HOOD	
37	508546D1	1	PANEL, CENTER TOP HOOD	
42	515238D1	1	INSULATION	
43	520094D1	1	BARRER, RECIRC, SIDE	

Copyright © 2007 AGCO Corporation

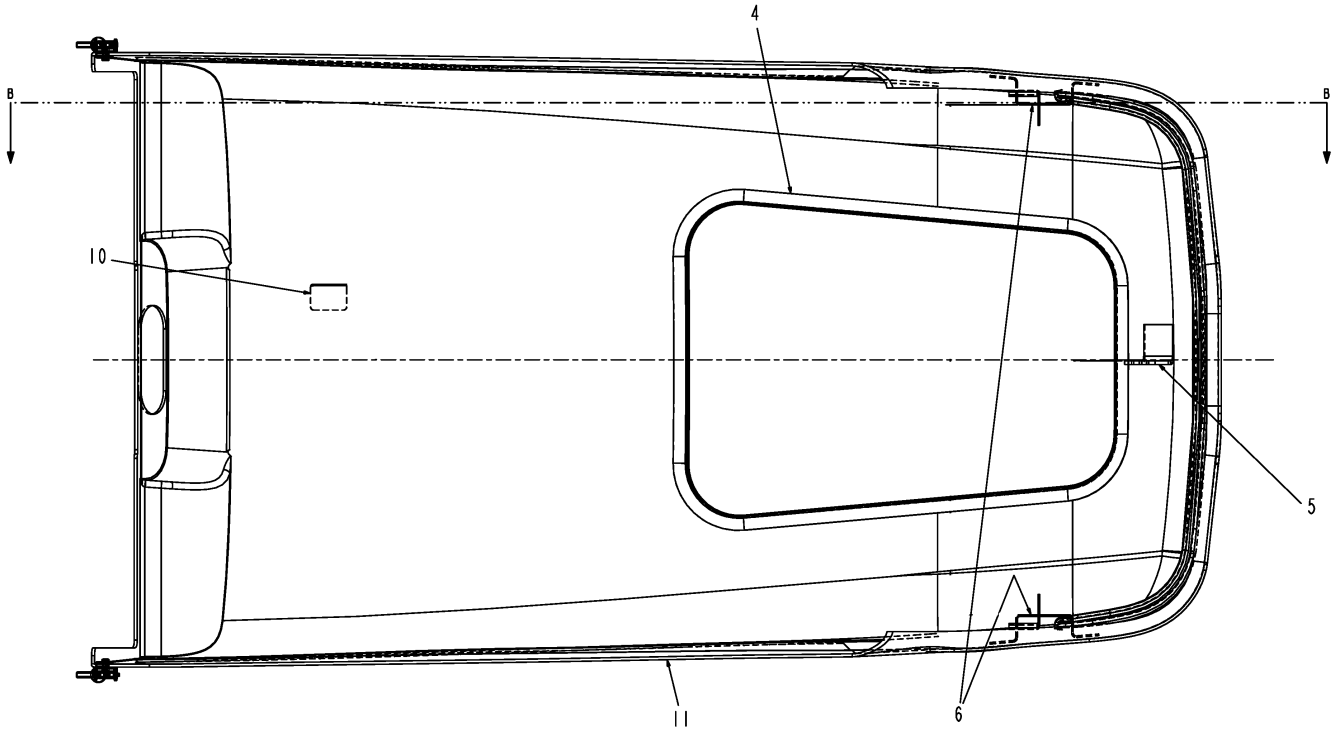

507034D1-04-N730-01.TIF

Copyright © 2007 AGCO Corporation

HOOD ASM - CHAL

ITEM	PART #	QTY	DESCRIPTION	COMMENTS
4	504072D1	1	SCREEN-AIR INLET	
5	504075D1	1	BRKET-HEADLIGHT SUPPORT,UPPER	
6	504076D1	2	BRACKET-PIVOT,HOOD MOUNT	
10	506010D1	1	BRACKET-GAS SPRING	
11	507035D1	1	HOOD - CHAL	

Copyright © 2007 AGCO Corporation

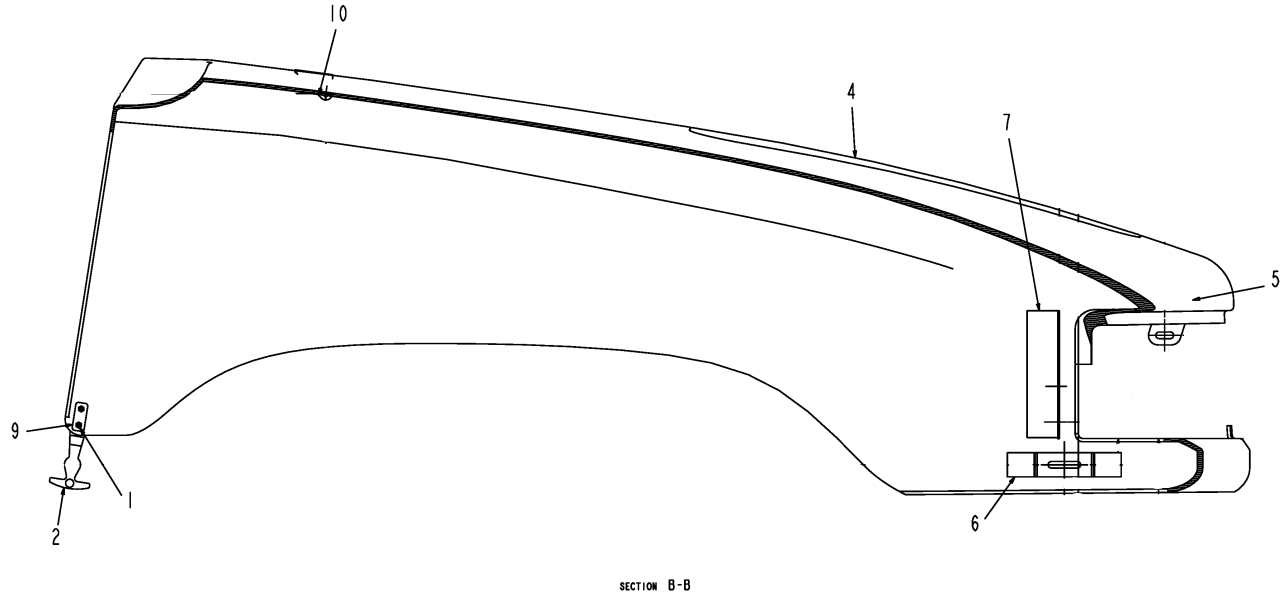

507034D1-04-N730-02.TIF

Copyright © 2007 AGCO Corporation

HOOD ASM - CHAL

ITEM	PART #	QTY	DESCRIPTION	COMMENTS
1	WR55412	4	NUT-LOCK,M5 X .8,PREV	
2	1545622	2	LATCH-DRAW,FLEXABLE	
4	504072D1	1	SCREEN-AIR INLET	
5	504075D1	1	BRKET-HEADLIGHT SUPPORT,UPPER	
6	504076D1	2	BRACKET-PIVOT,HOOD MOUNT	
7	504077D1	1	BRACKET-SUPPORT,HEADLIGHT,LH	
9	505596D1	2	PLATE-REINFORCING,HOOD LATCH	
10	506010D1	1	BRACKET-GAS SPRING	

Copyright © 2007 AGCO Corporation

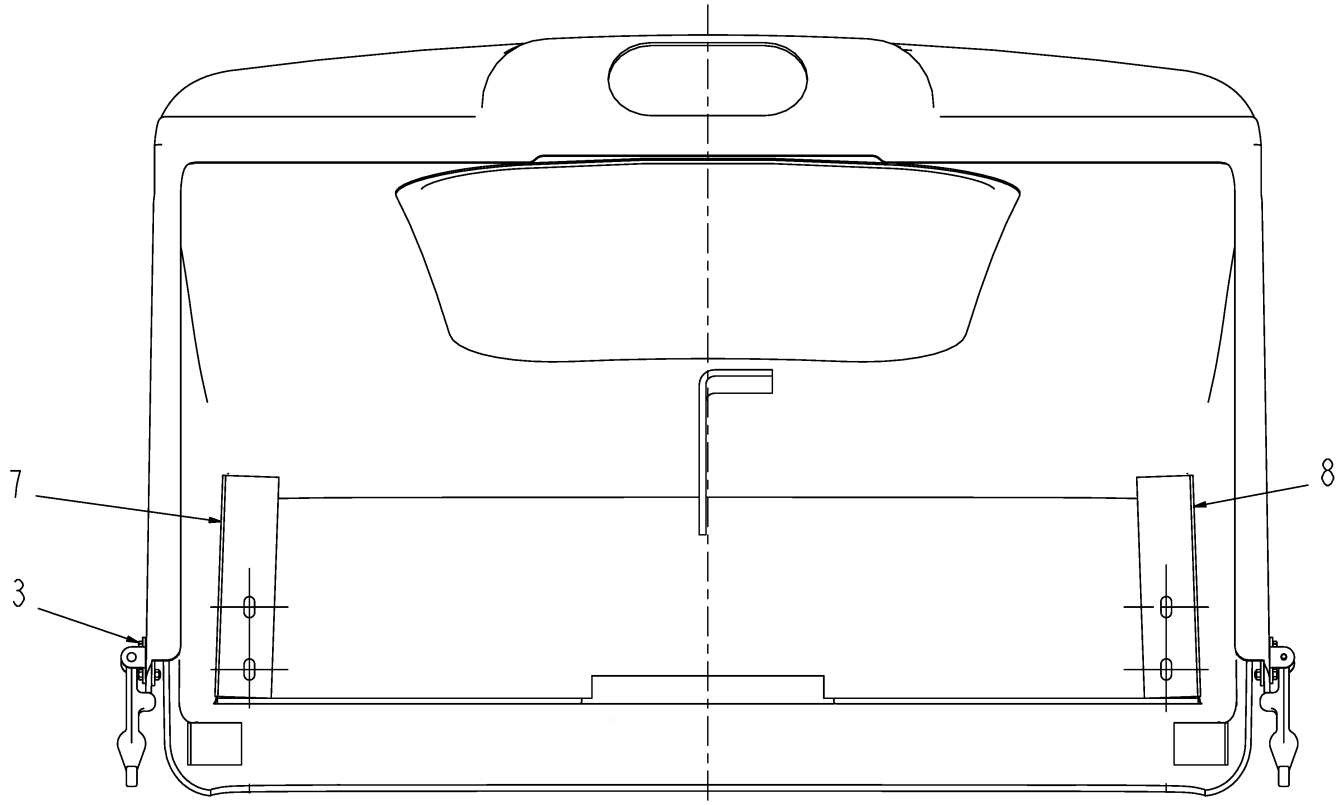

507034D1-04-N730-03.TIF

Copyright © 2007 AGCO Corporation

ITEM	PART #	QTY	DESCRIPTION	COMMENTS
3	400021X1	4	BOLT-M5X0.8-6GX16MM ZN HHD 8.8	
7	504077D1	1	BRACKET-SUPPORT,HEADLIGHT,LH	
8	504078D1	1	BRACKET-SUPPORT,HEADLIGHT,RH	

Copyright © 2007 AGCO Corporation

TIRE INSTL-230/95R32, GRY	13-1
TIRE ASM-230/95R32, LH GRAY	13-2
TIRE ASM-230/95R32, RH GRAY	13-3
TIRE INSTL-380/85R24,GRY	13-4
TIRE ASM-380/85R24,LH,GRY	13-5
TIRE ASM-380/85R24,RH,GRY	13-6
TIRE INSTL-230/95R32, GRY	13-7
TIRE INSTL-380/85R24,GRY	13-8
TIRE INSTL-320/85R24,GRY,REAR	13-9
TIRE ASM-320/85R24,LH,GRY	13-10
TIRE ASM-320/85R24,RH,GRY	13-11
TIRE INSTL-320/85R24,GRY,REAR	13-12
TIRE INSTL - 9.00X24,GRY	13-13
TIRE ASM-9.00X24,GRY	13-14
TIRE INSTL - 9.00X24,GRY,FLD	13-15
TIRE ASM-9.00X24,GRY,FLD	13-16
TIRE INSTL - 320/85R24,GRY,FLD	13-17
TIRE ASM-320/85R24,LH,GRY,FLD	13-18
TIRE ASM-320/85R24,RH,GRY,FLD	13-19
TIRE INSTL - 9.00X24,GRY	13-20
TIRE INSTL - 9.00X24,GRY,FLD	13-21
TIRE INSTL - 320/85R24,GRY	13-22
TIRE INSTL - 320/85R24,GRY,FLD	13-23

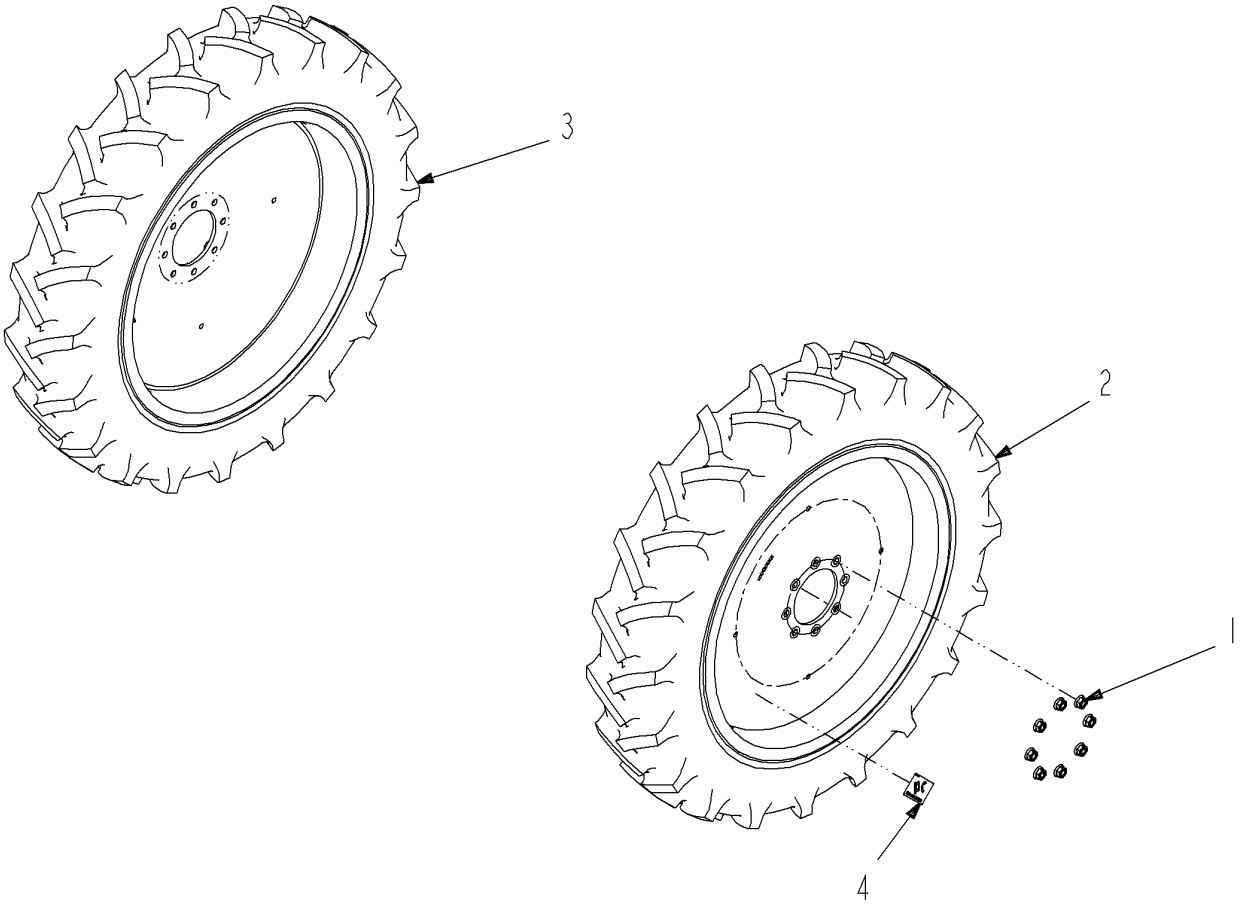

513415D1-01-R162-.TIF

Copyright © 2007 AGCO Corporation

TIRE INSTL-230/95R32, GRY

ITEM	PART #	QTY	DESCRIPTION	COMMENTS
1	7774862	16	NUT-HEX FLANGE 5/8X18 GR 8 YZ	
2	513400D1	1	TIRE ASM-230/95R32, LH GRAY	SEE PAGE 13-2
3	513401D1	1	TIRE ASM-230/95R32, RH GRAY	SEE PAGE 13-3
4	520020D1	2	DECAL-TORQUE 386	

Copyright © 2007 AGCO Corporation

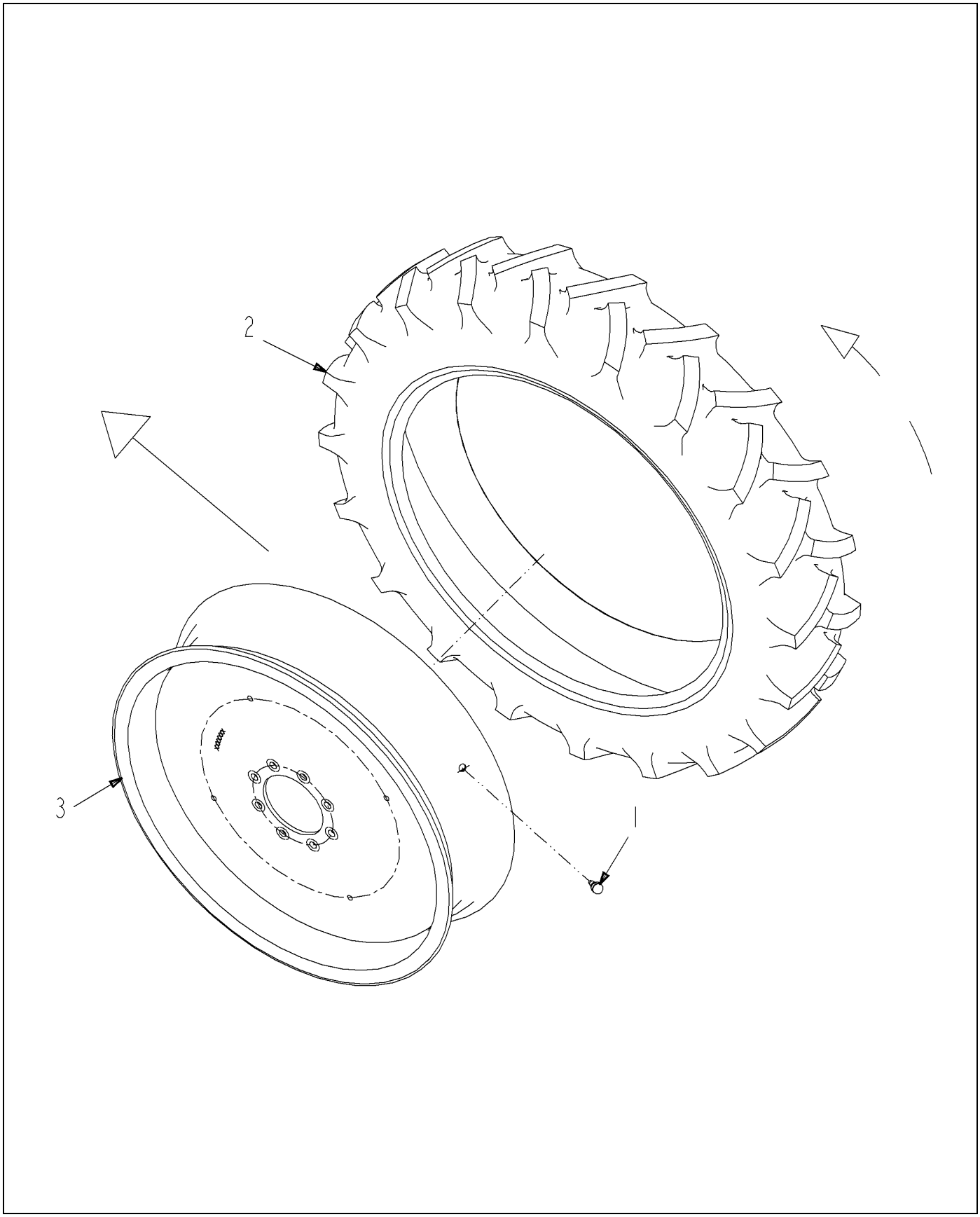

513400D1-01-R162-.TIF

Copyright © 2007 AGCO Corporation

TIRE ASM-230/95R32, LH GRAY

ITEM	PART #	QTY	DESCRIPTION	COMMENTS
1	AG517766	1	VALVE TIRE	
2	513384D1	1	TIRE- 230/95R32, LUG R1	
3	513388D1	1	RIM-32W8, GRAY	

Copyright © 2007 AGCO Corporation

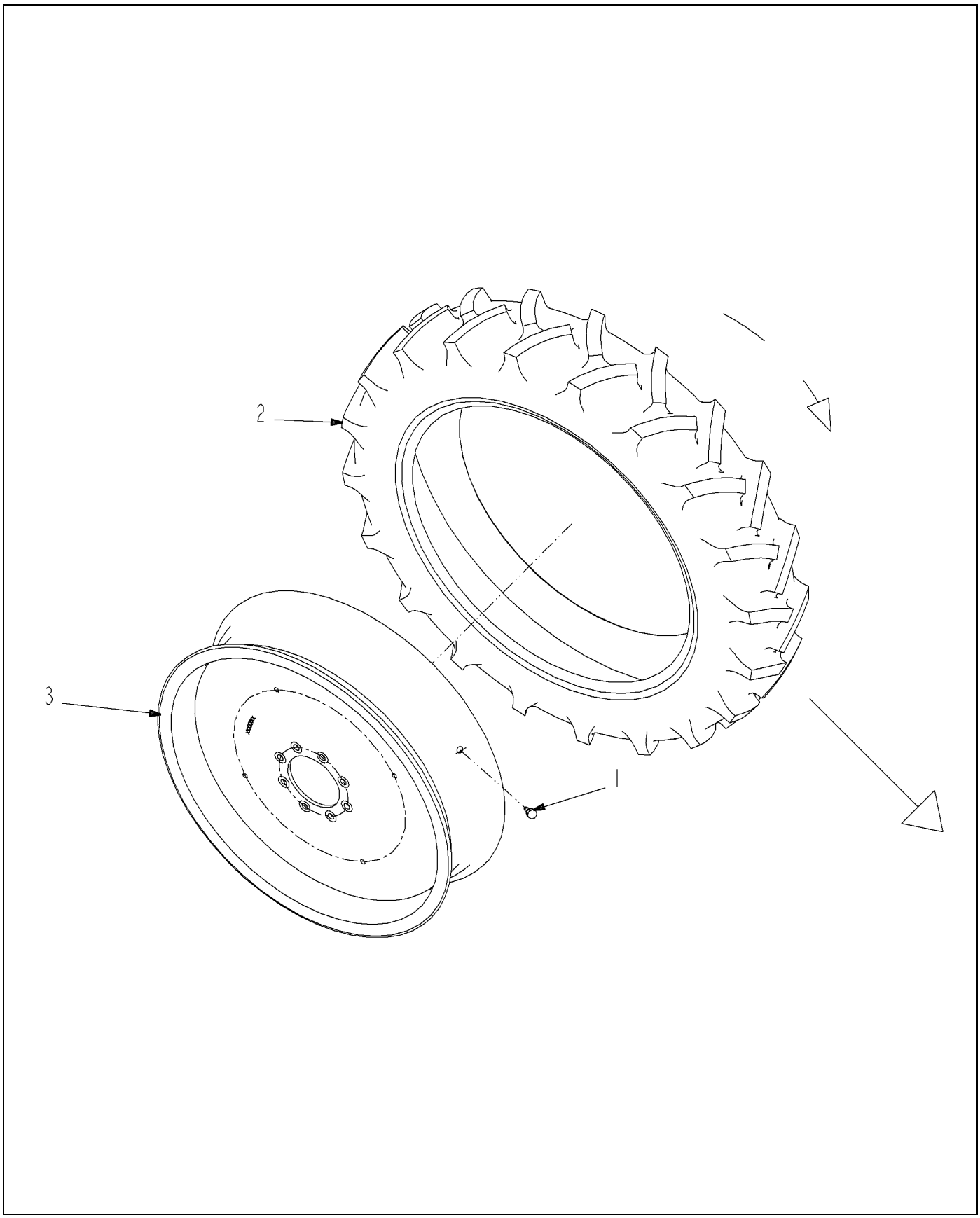

513401D1-01-R162-.TIF

Copyright © 2007 AGCO Corporation

TIRE ASM-230/95R32, RH GRAY

ITEM	PART #	QTY	DESCRIPTION	COMMENTS
1	AG517766	1	VALVE TIRE	
2	513384D1	1	TIRE- 230/95R32, LUG R1	
3	513388D1	1	RIM-32W8, GRAY	

Copyright © 2007 AGCO Corporation

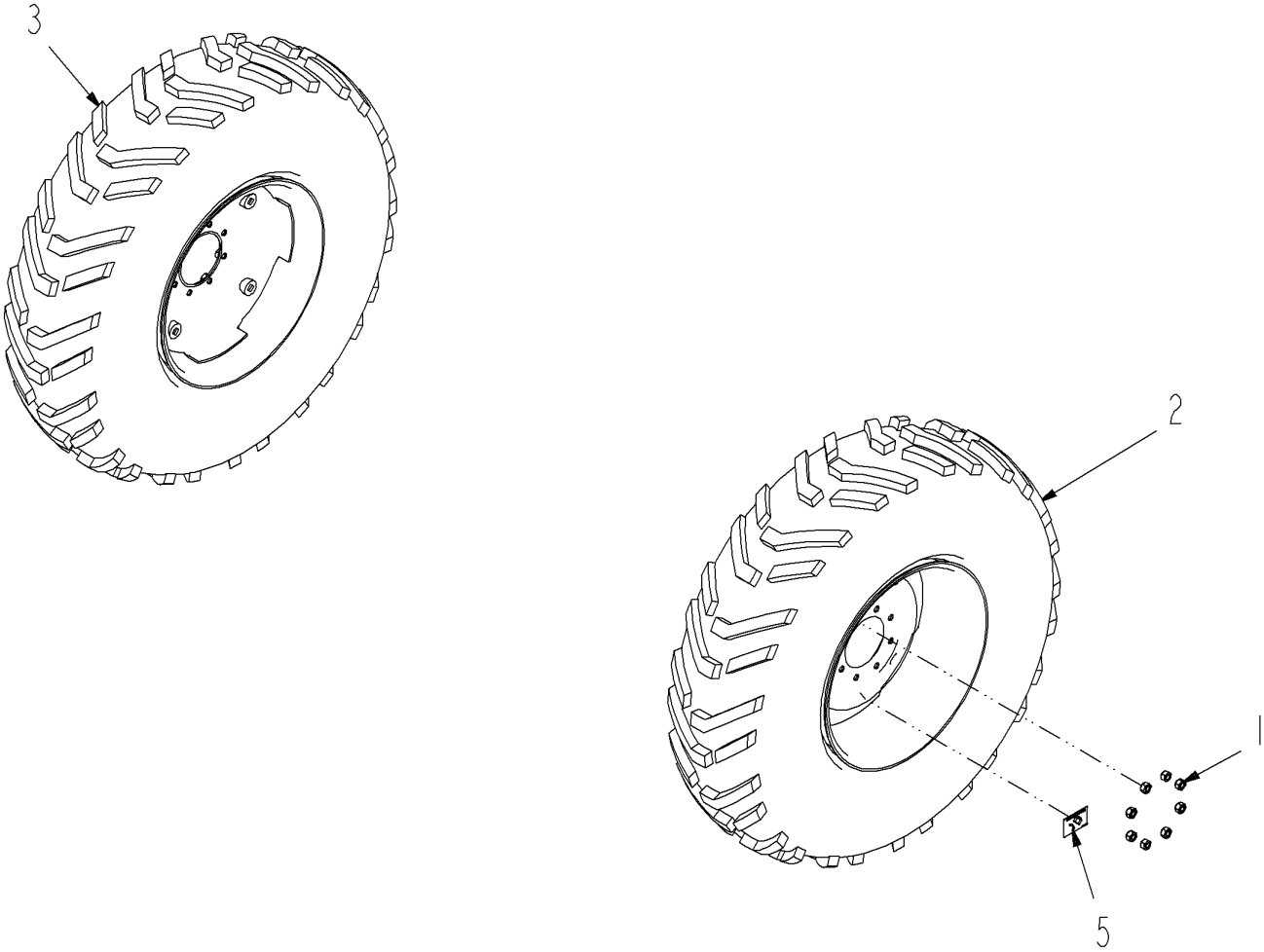

513425D1-01-R162-.TIF

Copyright © 2007 AGCO Corporation

TIRE INSTL-380/85R24,GRY

ITEM	PART #	QTY	DESCRIPTION	COMMENTS
1	6803542	16	NUT-WHEEL	
2	513398D1	1	TIRE ASM-380/85R24,LH,GRY	SEE PAGE 13-5
3	513399D1	1	TIRE ASM-380/85R24,RH,GRY	[A] SEE PAGE 13-6
4	519538D1	1	SHIPPING PKG- REAR TIRE F/A	
5	520019D1	2	DECAL-TORQUE 149	
	FOOTNOTE [A]		S/N ..Txx1001	

Copyright © 2007 AGCO Corporation

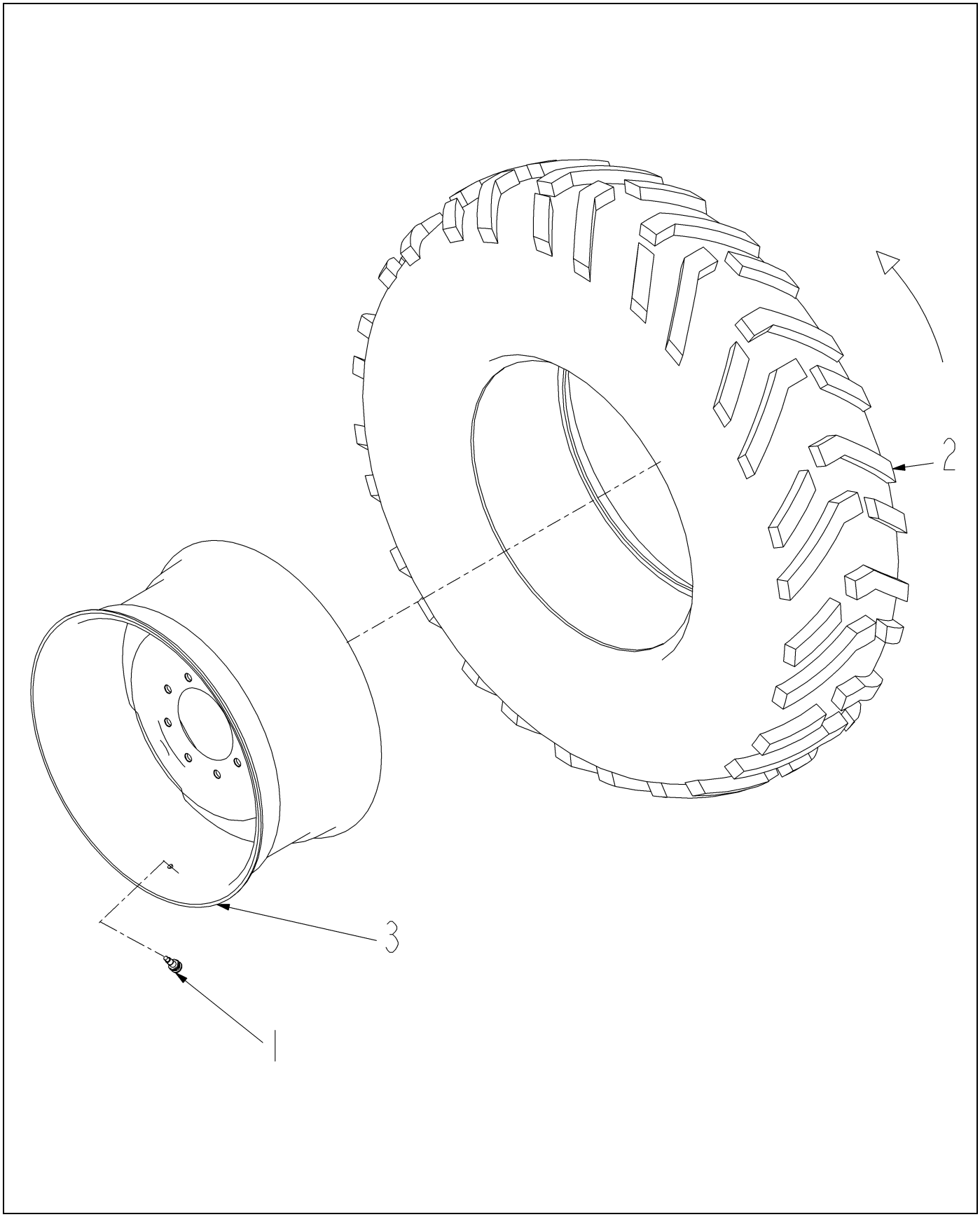

513398D1-02-R285-.TIF

Copyright © 2007 AGCO Corporation

TIRE ASM-380/85R24,LH,GRY

ITEM	PART #	QTY	DESCRIPTION	COMMENTS
1	AG517766	1	VALVE TIRE	
2	513383D1	1	TIRE-380/85R24,LUG	
3	513387D1	1	RIM-24W12,GRY	

Copyright © 2007 AGCO Corporation

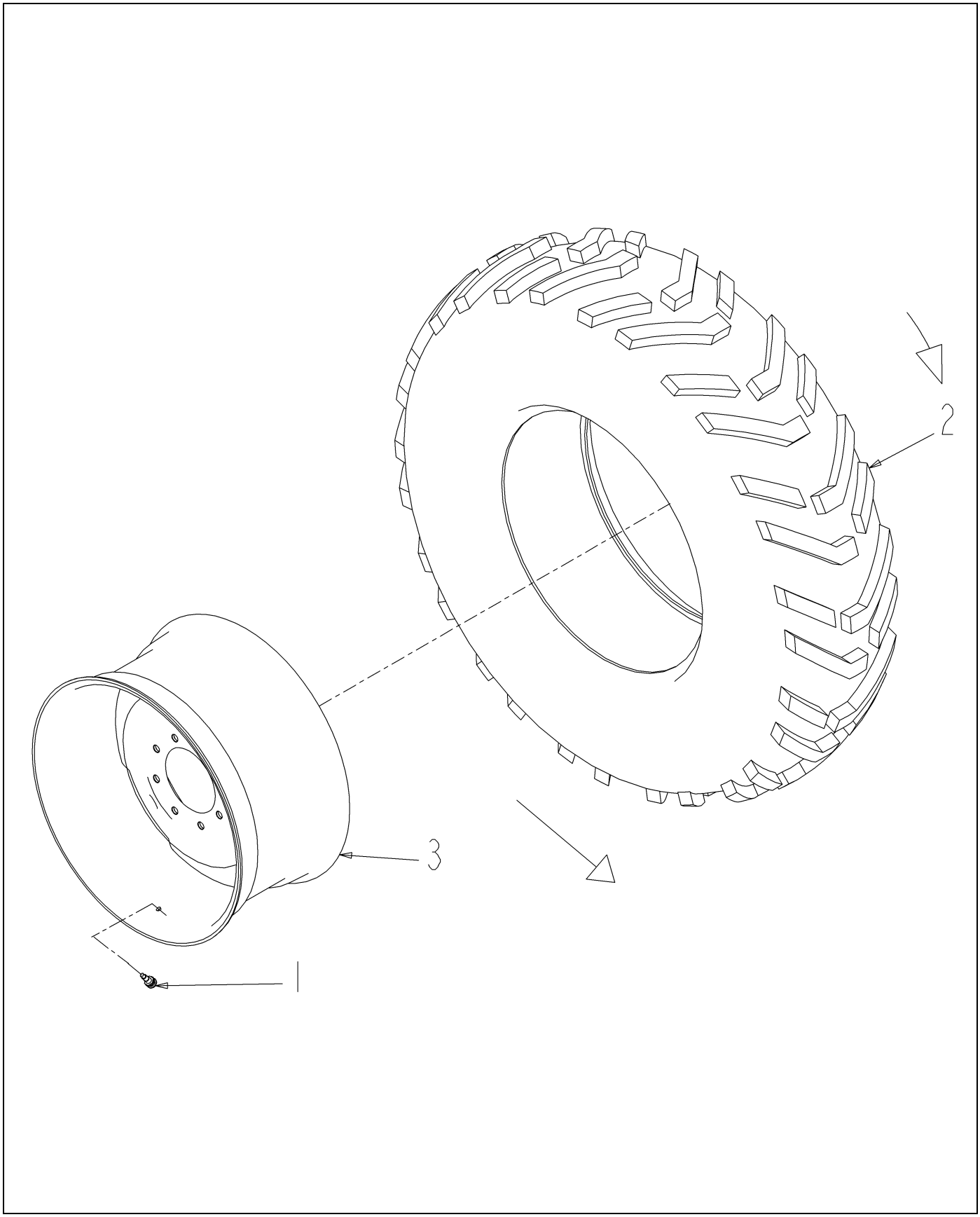

513399D1-02-R285-.TIF

Copyright © 2007 AGCO Corporation

TIRE ASM-380/85R24,RH,GRY

ITEM	PART #	QTY	DESCRIPTION	COMMENTS
1	AG517766	1	VALVE TIRE	
2	513383D1	1	TIRE-380/85R24,LUG	
3	513387D1	1	RIM-24W12,GRY	
	FOOTNOTE		S/N ..Txx1001	

Copyright © 2007 AGCO Corporation

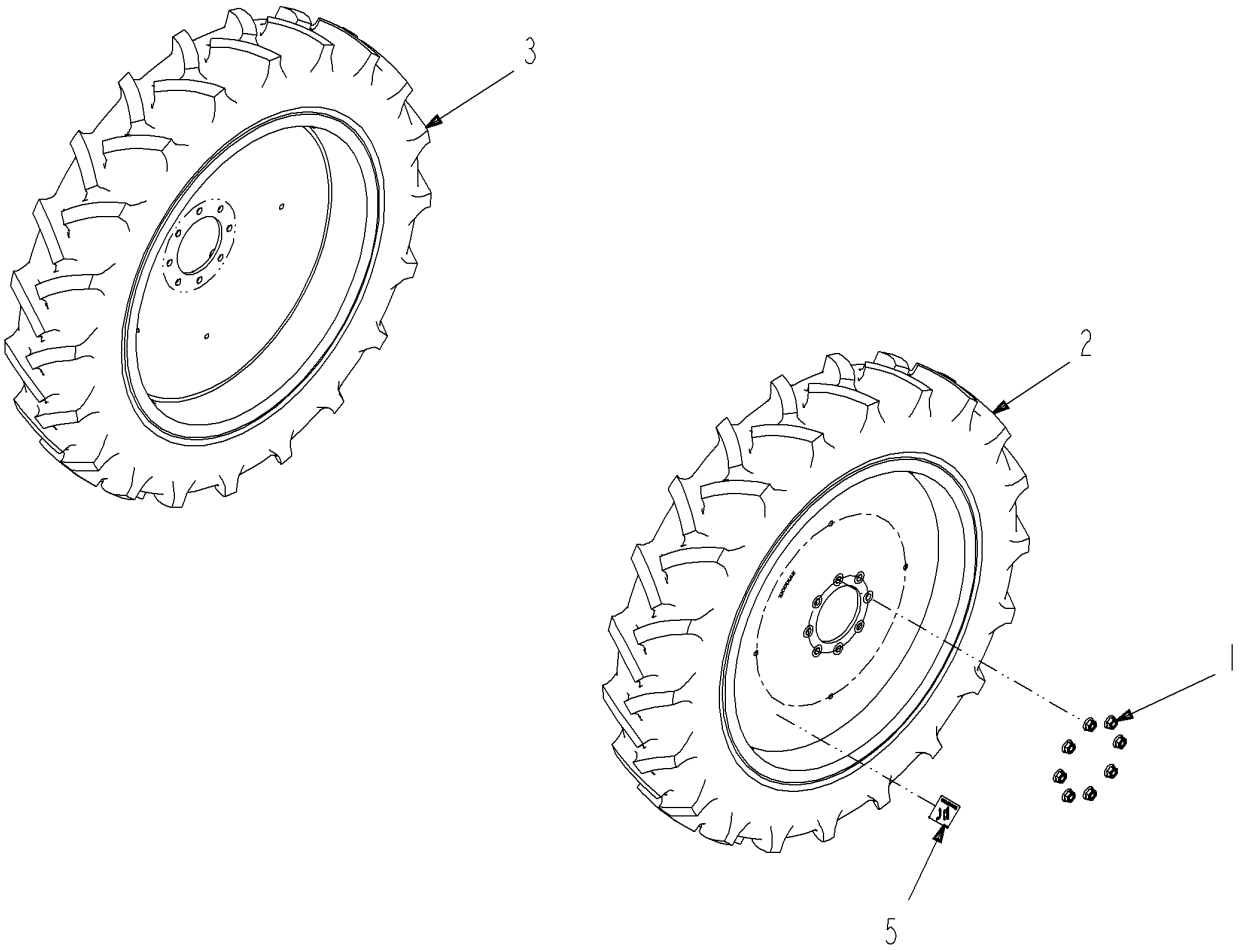

513429D1-01-R162-.TIF

Copyright © 2007 AGCO Corporation

TIRE INSTL-230/95R32, GRY

ITEM	PART #	QTY	DESCRIPTION	COMMENTS
1	7774862	16	NUT-HEX FLANGE 5/8X18 GR 8 YZ	
2	513400D1	1	TIRE ASM-230/95R32, LH GRAY	SEE PAGE 13-2
3	513401D1	1	TIRE ASM-230/95R32, RH GRAY	SEE PAGE 13-3
4	519539D1	1	SHIPPING PKG- REAR TIRE F/A	
5	520020D1	2	DECAL-TORQUE 386	

Copyright © 2007 AGCO Corporation

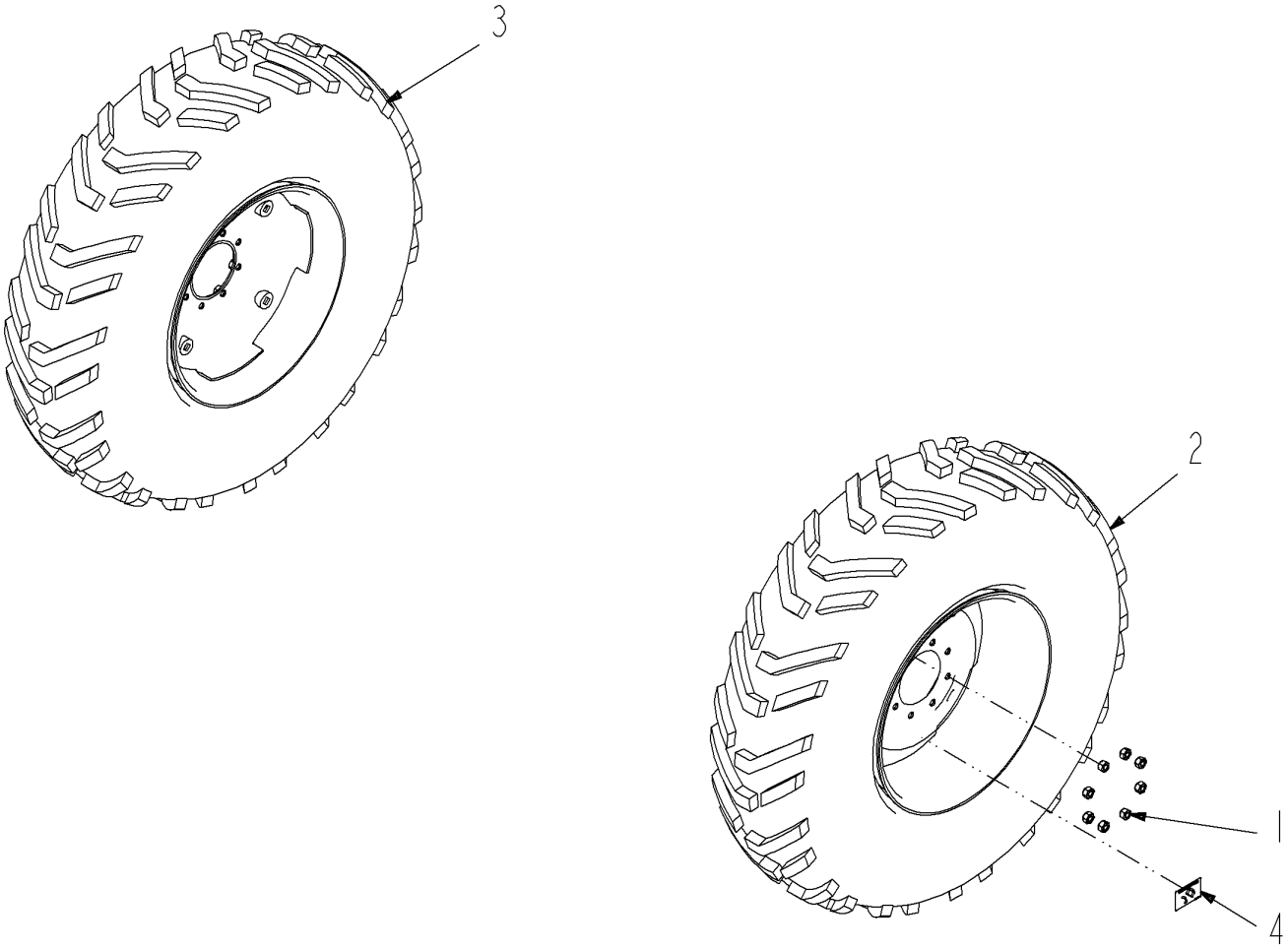

513689D1-01-R162-.TIF

Copyright © 2007 AGCO Corporation

TIRE INSTL-380/85R24,GRY

ITEM	PART #	QTY	DESCRIPTION	COMMENTS
1	6803542	16	NUT-WHEEL	
2	513398D1	1	TIRE ASM-380/85R24,LH,GRY	SEE PAGE 13-5
3	513399D1	1	TIRE ASM-380/85R24,RH,GRY	[A] SEE PAGE 13-6
4	520019D1	2	DECAL-TORQUE 149	
	FOOTNOTE [A]		S/N ..Txx1001	

Copyright © 2007 AGCO Corporation

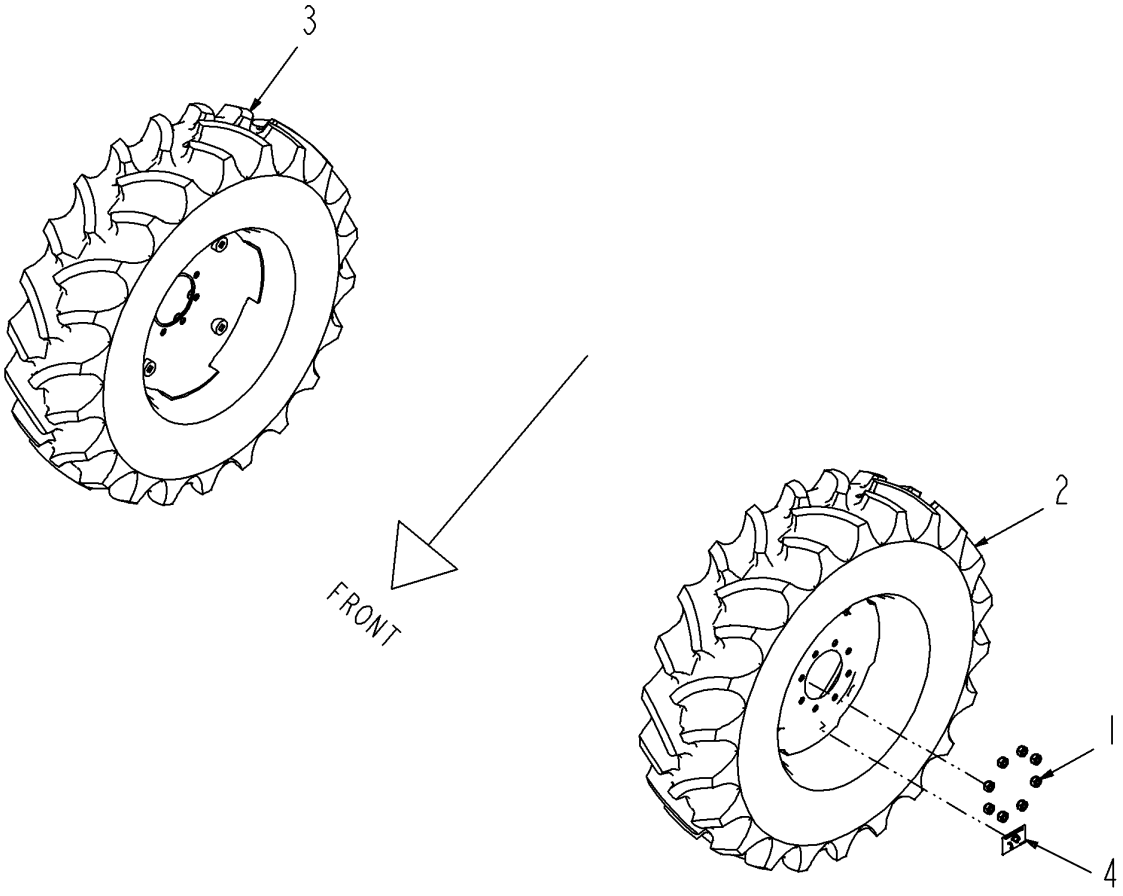

513412D1-02-R670-.TIF

Copyright © 2007 AGCO Corporation

TIRE INSTL-320/85R24,GRY,REAR

ITEM	PART #	QTY	DESCRIPTION	COMMENTS
1	6803542	16	NUT-WHEEL	
2	504433D1	1	TIRE ASM-320/85R24,LH,GRAY	SEE PAGE 13-10
3	504434D1	1	TIRE ASM-320/85R24,RH,GRAY	SEE PAGE 13-11
4	520019D1	2	DECAL-TORQUE 149	

Copyright © 2007 AGCO Corporation

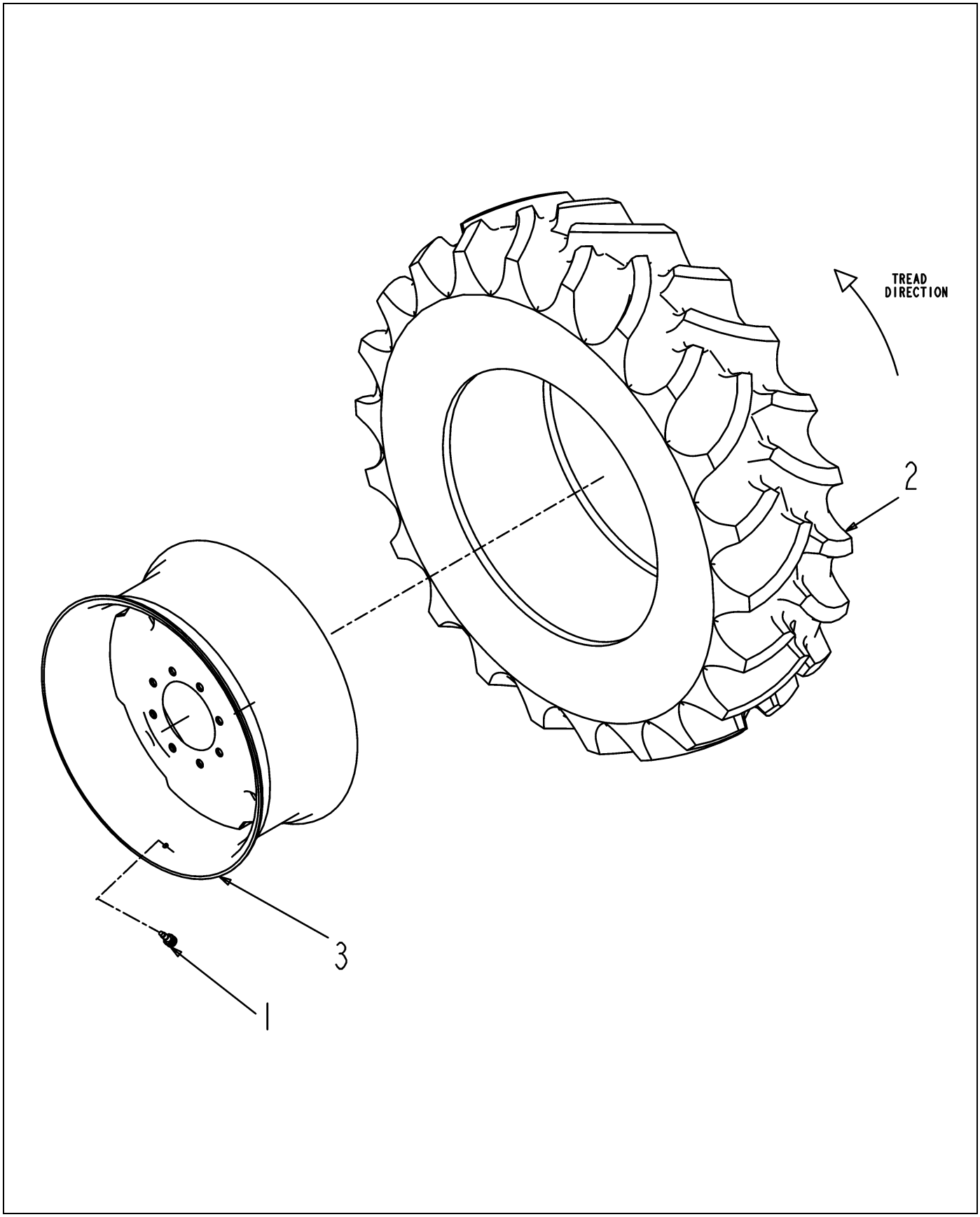

504433D1-02-M668-.TIF

Copyright © 2007 AGCO Corporation

TIRE ASM-320/85R24,LH,GRY

ITEM	PART #	QTY	DESCRIPTION	COMMENTS
1	AG517766	1	VALVE TIRE	
2	503932D1	1	TIRE-320/85R24, LUG	
3	504440D1	1	RIM - 24 X 10,GRAY	

Copyright © 2007 AGCO Corporation

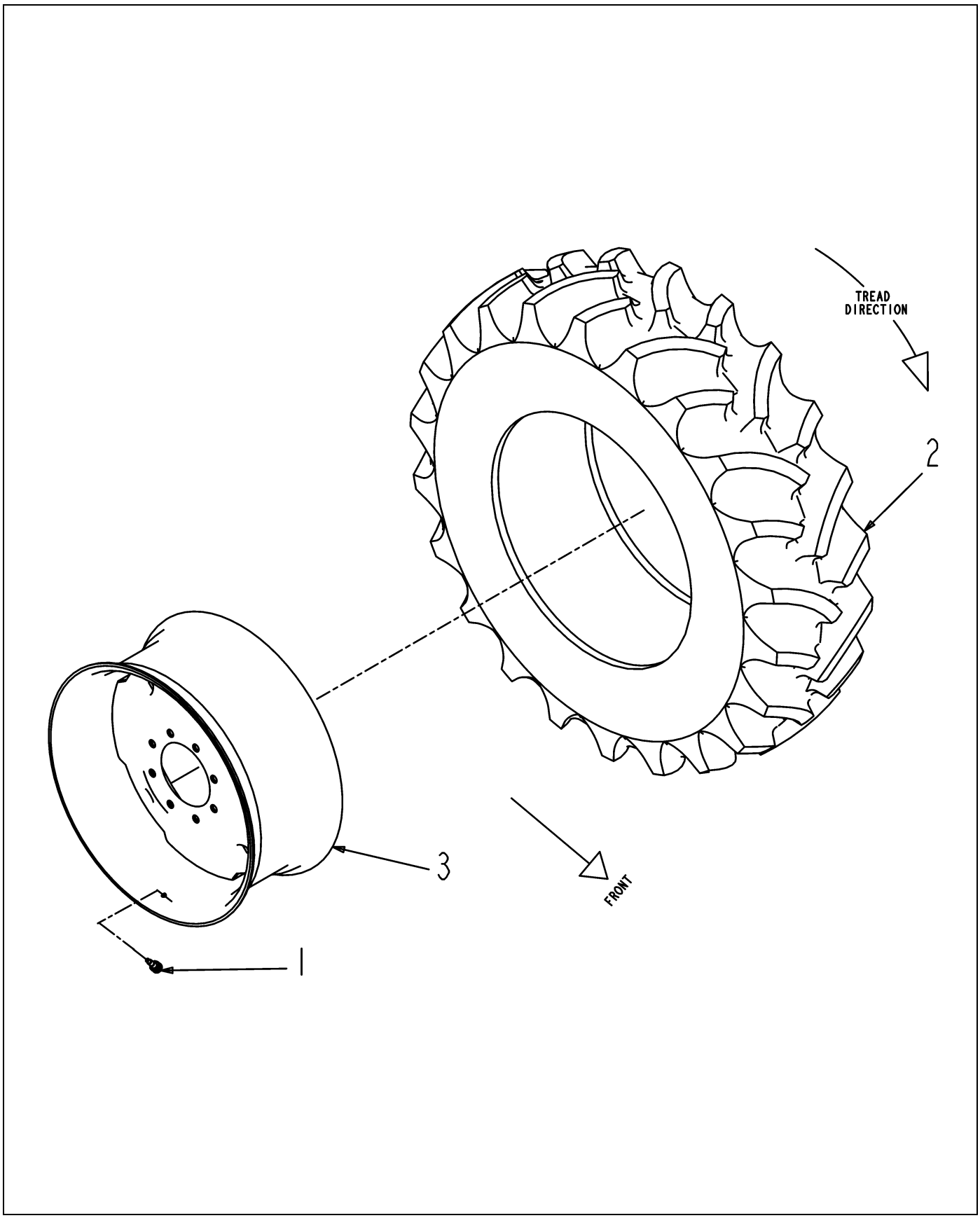

504434D1-02-M668-.TIF

Copyright © 2007 AGCO Corporation

TIRE ASM-320/85R24,RH,GRY

ITEM	PART #	QTY	DESCRIPTION	COMMENTS
1	AG517766	1	VALVE TIRE	
2	503932D1	1	TIRE-320/85R24, LUG	
3	504440D1	1	RIM - 24 X 10,GRAY	

Copyright © 2007 AGCO Corporation

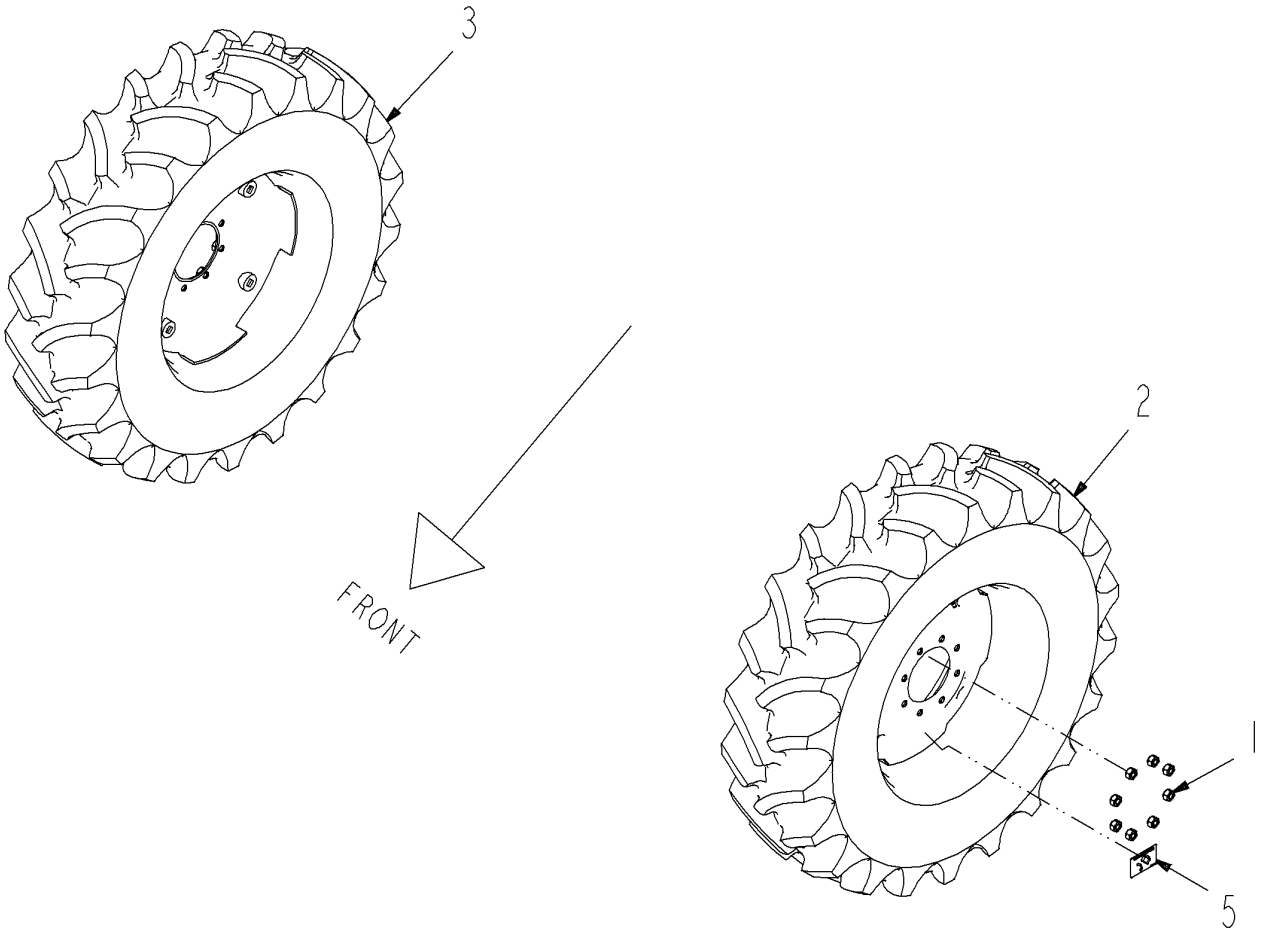

513426D1-02-R670-.TIF

Copyright © 2007 AGCO Corporation

TIRE INSTL-320/85R24,GRY,REAR

ITEM	PART #	QTY	DESCRIPTION	COMMENTS
1	6803542	16	NUT-WHEEL	
2	504433D1	1	TIRE ASM-320/85R24,LH,GRAY	SEE PAGE 13-10
3	504434D1	1	TIRE ASM-320/85R24,RH,GRAY	SEE PAGE 13-11
4	519537D1	1	SHIPPING PKG- REAR TIRE F/A	
5	520019D1	2	DECAL-TORQUE 149	

Copyright © 2007 AGCO Corporation

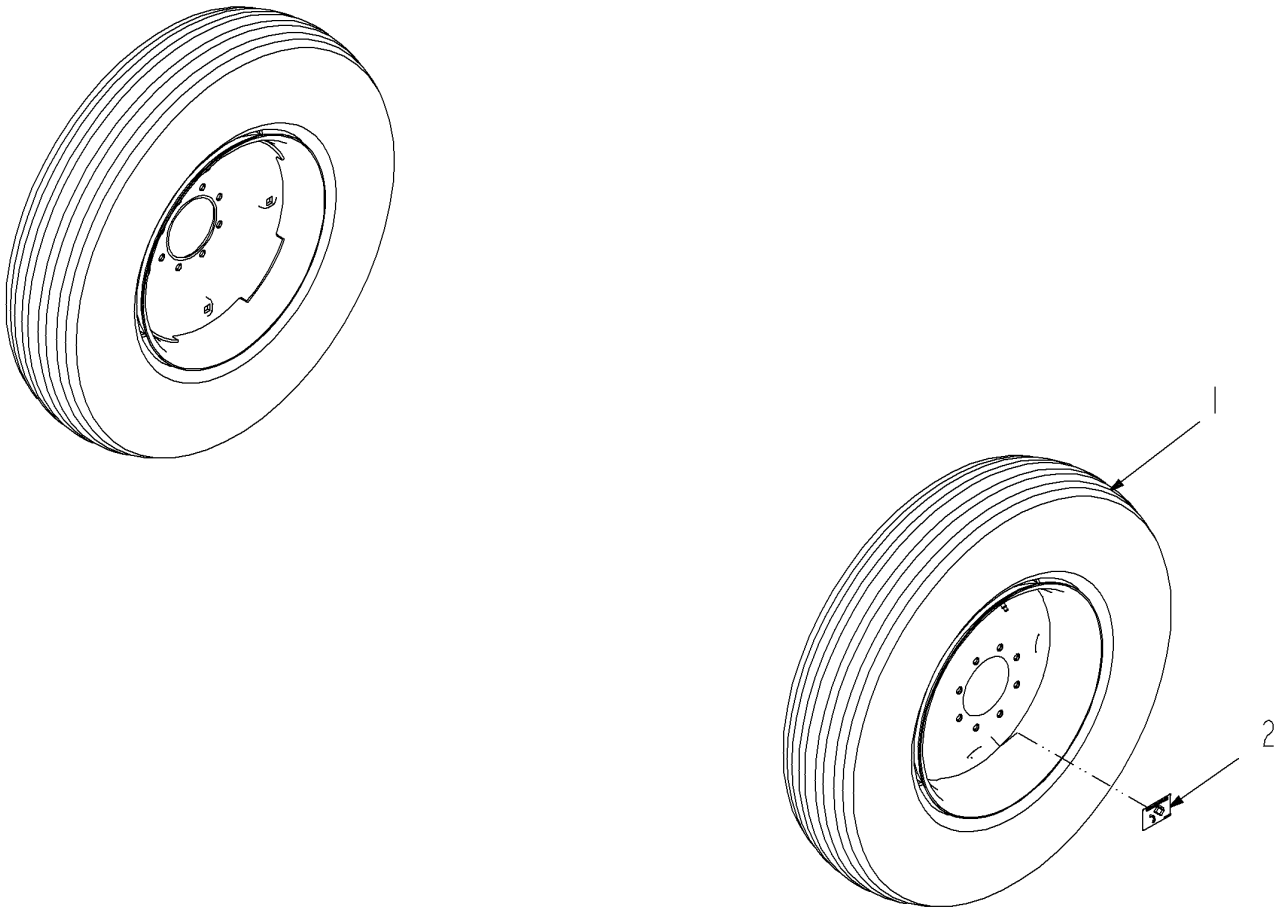

516073D1-02-R162-.TIF

Copyright © 2007 AGCO Corporation

TIRE INSTL - 9.00X24,GRY

ITEM	PART #	QTY	DESCRIPTION	COMMENTS
1	516062D1	2	TIRE ASM-9.00X24,GRY	[A] SEE PAGE 13-14
2	520019D1	2	DECAL-TORQUE 149	
	FOOTNOTE [A]		S/N ..Txx1001	
	FOOTNOTE		S/N ..Txx1001	

Copyright © 2007 AGCO Corporation

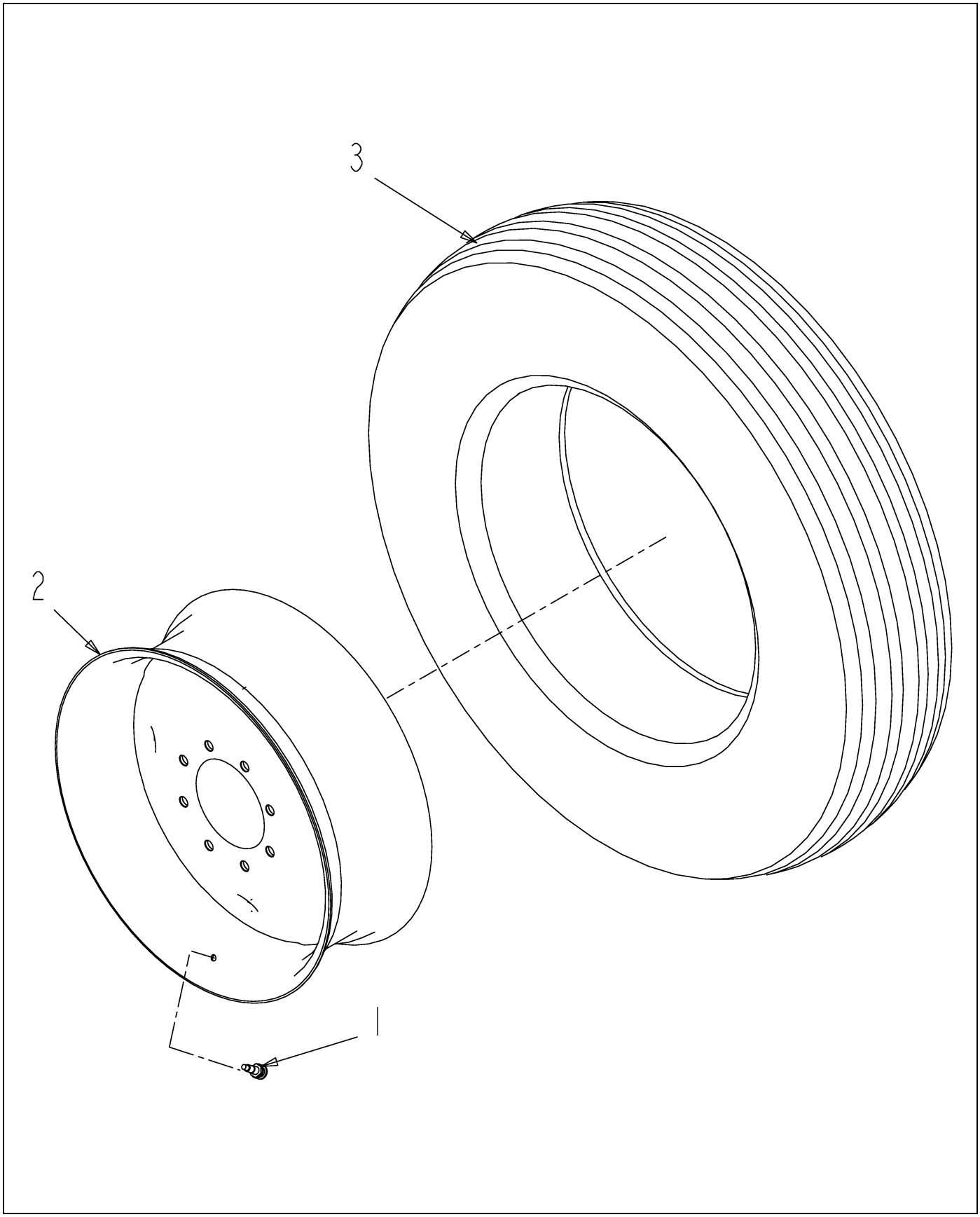

516062D1-01-N961-.TIF

Copyright © 2007 AGCO Corporation

TIRE ASM-9.00X24,GRY

ITEM	PART #	QTY	DESCRIPTION	COMMENTS
1	AG517766	1	VALVE TIRE	
2	504436D1	1	RIM - 24 X 8,GRAY	
3	516052D1	1	TIRE - 9.00 X 24, RIB	
	FOOTNOTE		S/N ..Txx1001	

Copyright © 2007 AGCO Corporation

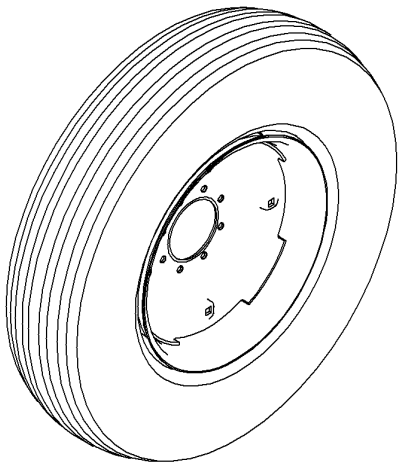

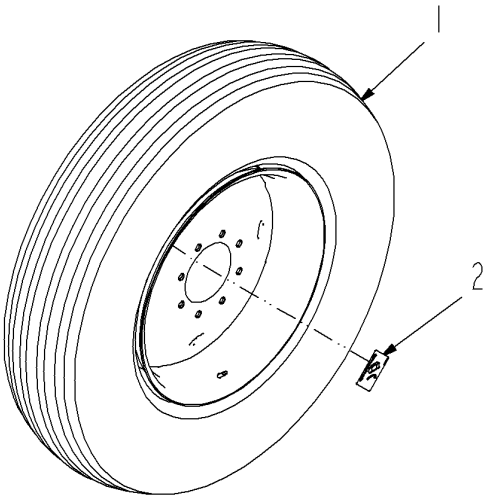

516074D1-03-R581-.TIF

Copyright © 2007 AGCO Corporation

TIRE INSTL - 9.00X24,GRY,FLD

ITEM	PART #	QTY	DESCRIPTION	COMMENTS
1	516063D1	2	TIRE ASM-9.00X24,GRY,FLD	[A] SEE PAGE 13-16
2	520019D1	2	DECAL-TORQUE 149	
	FOOTNOTE [A]		S/N ..Txx1001	
	FOOTNOTE		S/N ..Txx1001	

Copyright © 2007 AGCO Corporation

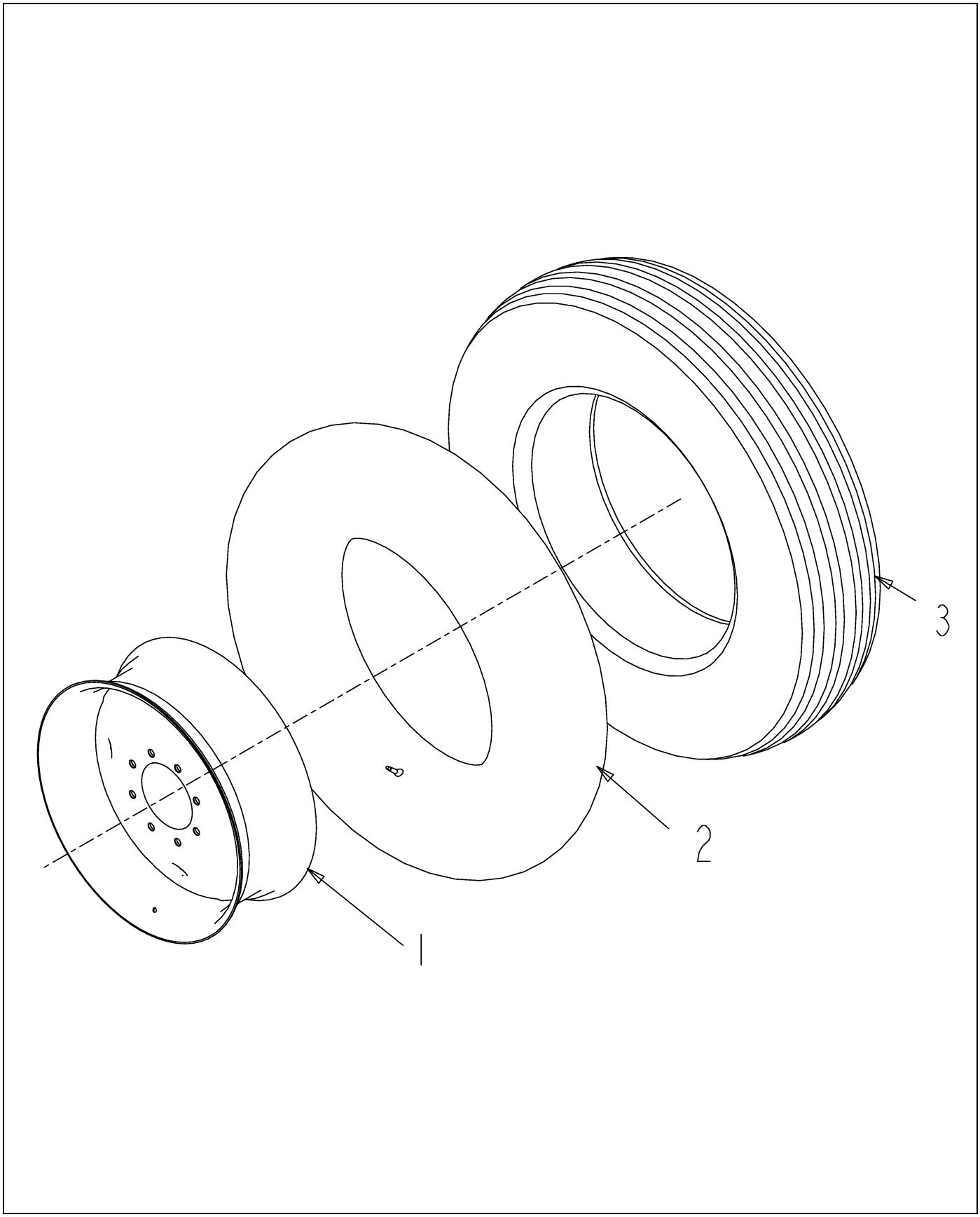

516063D1-01-N961-.TIF

Copyright © 2007 AGCO Corporation

TIRE ASM-9.00X24,GRY,FLD

ITEM	PART #	QTY	DESCRIPTION	COMMENTS
1	504436D1	1	RIM - 24 X 8,GRAY	
3	516052D1	1	TIRE - 9.00 X 24, RIB	
5	506957D1	1	TUBE-INNER, 9.0 X 24	
	FOOTNOTE		S/N ..Txx1001	

Copyright © 2007 AGCO Corporation

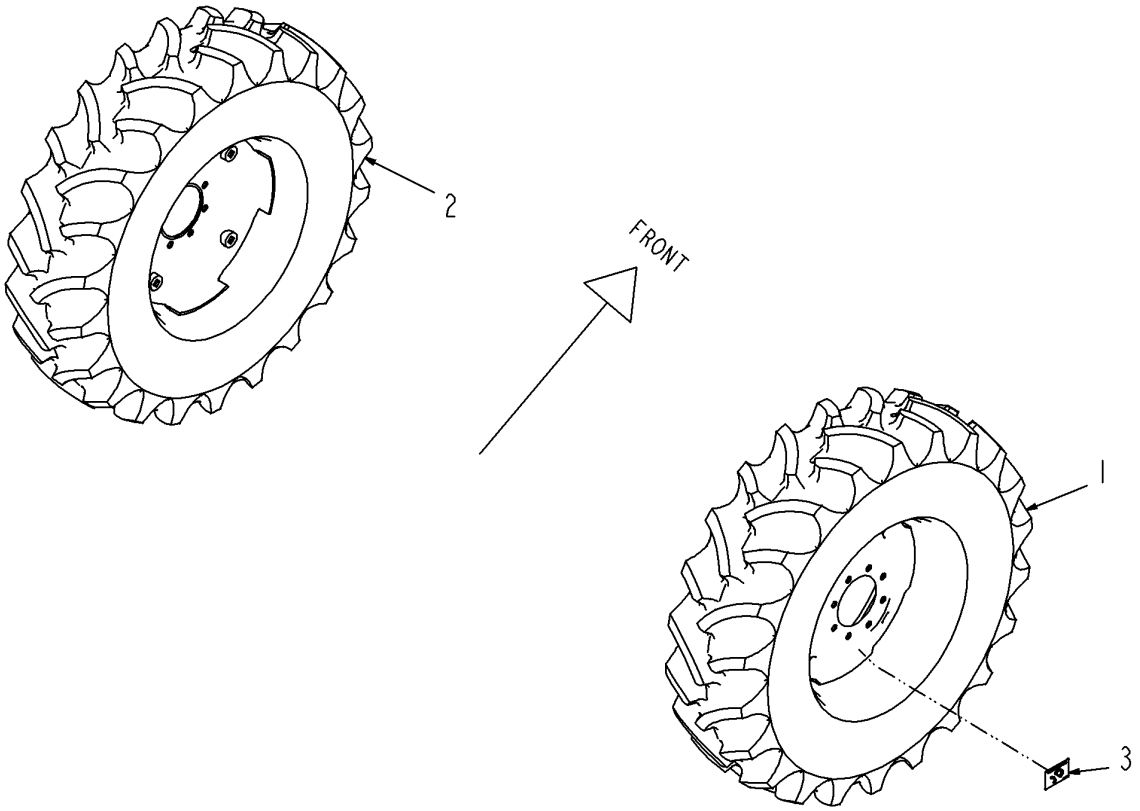

516076D1-04-R670-.TIF

Copyright © 2007 AGCO Corporation

TIRE INSTL - 320/85R24,GRY,FLD

ITEM	PART #	QTY	DESCRIPTION	COMMENTS
1	513396D1	1	TIRE ASM-320/85R24,LH,GRY,FLD	SEE PAGE 13-18
2	513397D1	1	TIRE ASM-320/85R24,RH,GRY,FLD	SEE PAGE 13-19
3	520019D1	2	DECAL-TORQUE 149	
	FOOTNOTE		S/N ..Txx1001	

Copyright © 2007 AGCO Corporation

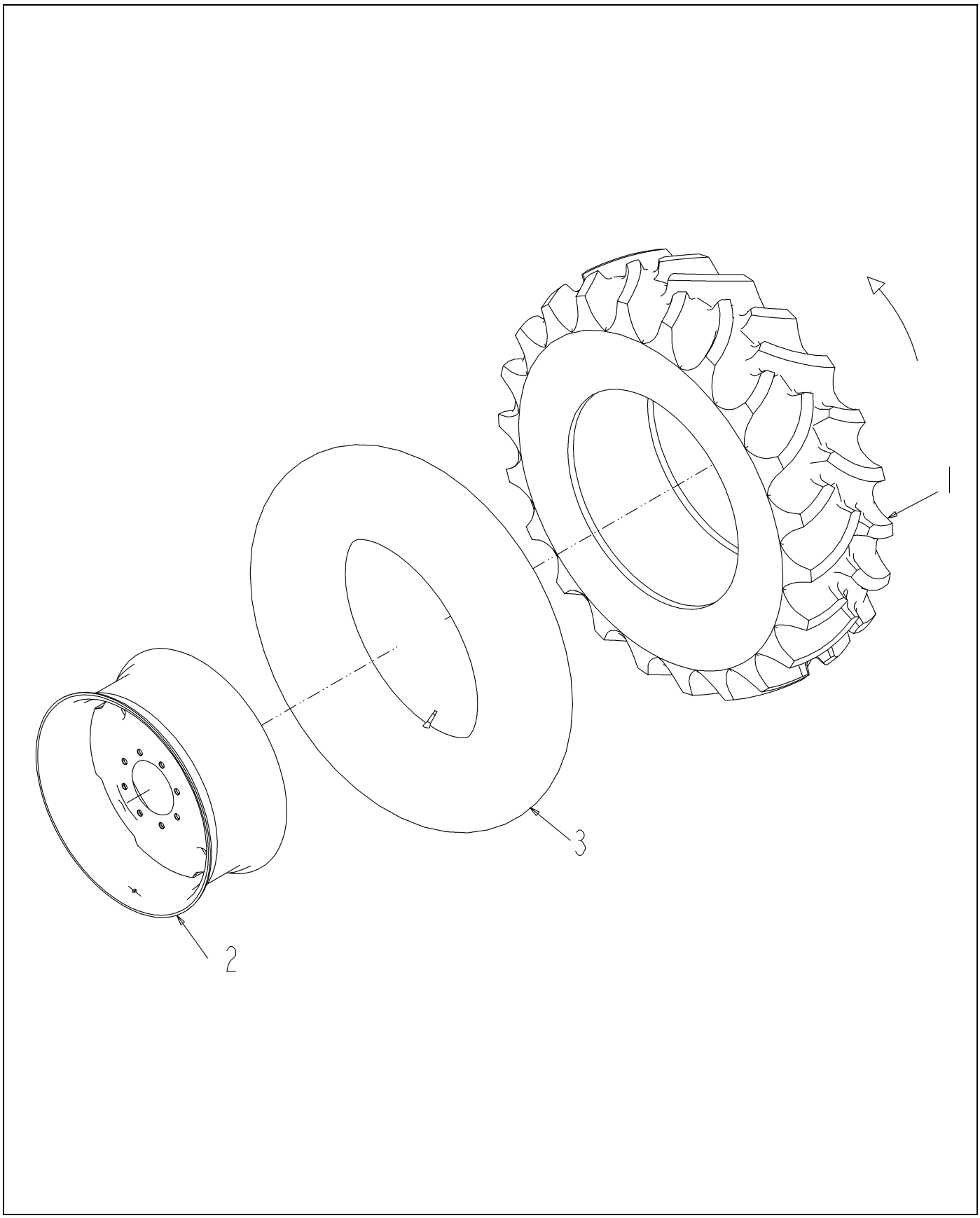

513396D1-03-R285-.TIF

Copyright © 2007 AGCO Corporation

TIRE ASM-320/85R24,LH,GRY,FLD

ITEM	PART #	QTY	DESCRIPTION	COMMENTS
1	503932D1	1	TIRE-320/85R24, LUG	
2	504440D1	1	RIM - 24 X 10,GRAY	
3	513389D1	1	TUBE-INNER,320 X 24	

Copyright © 2007 AGCO Corporation

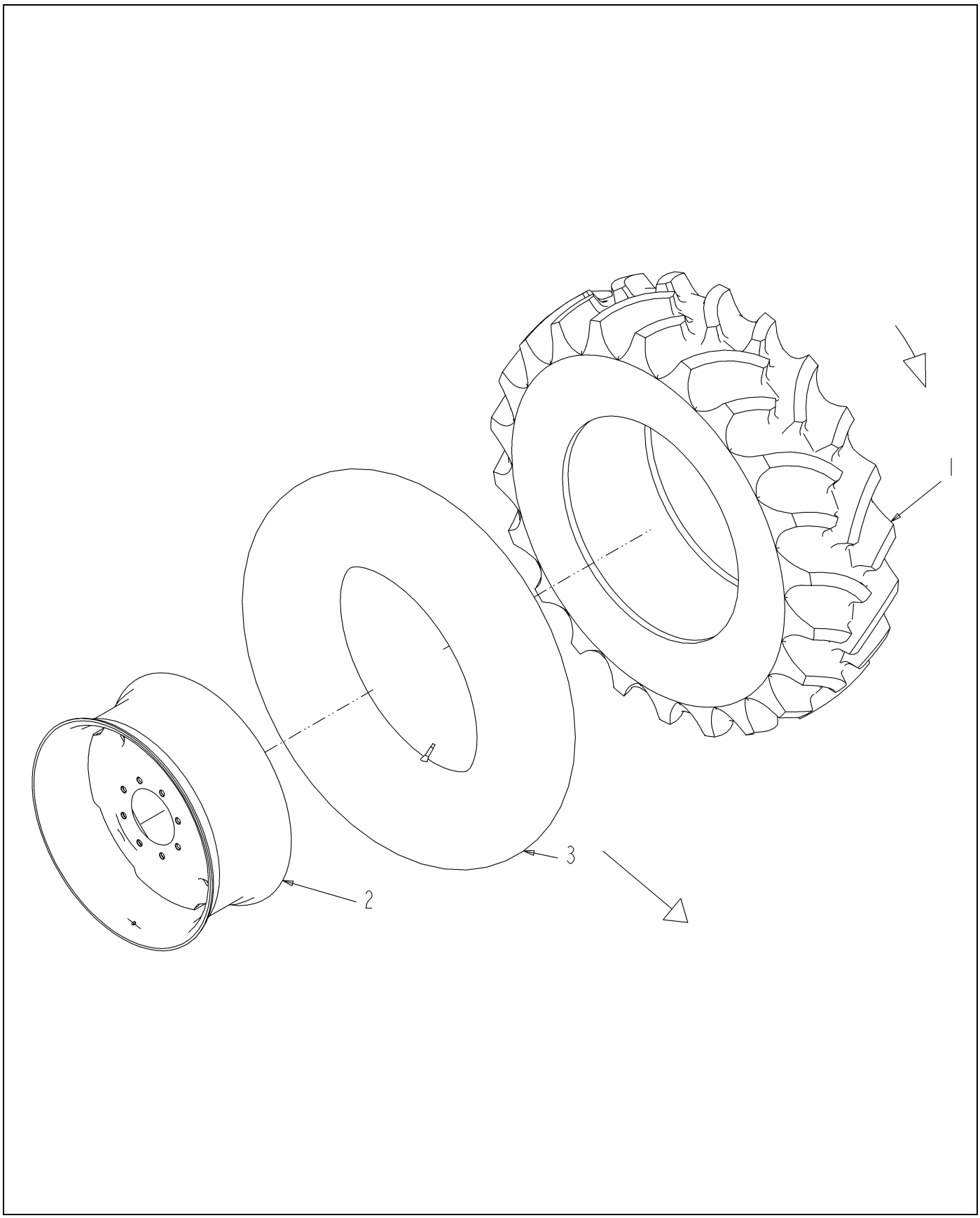

513397D1-03-R285-.TIF

Copyright © 2007 AGCO Corporation

TIRE ASM-320/85R24,RH,GRY,FLD

ITEM	PART #	QTY	DESCRIPTION	COMMENTS
1	503932D1	1	TIRE-320/85R24, LUG	
2	504440D1	1	RIM - 24 X 10,GRAY	
3	513389D1	1	TUBE-INNER,320 X 24	

Copyright © 2007 AGCO Corporation

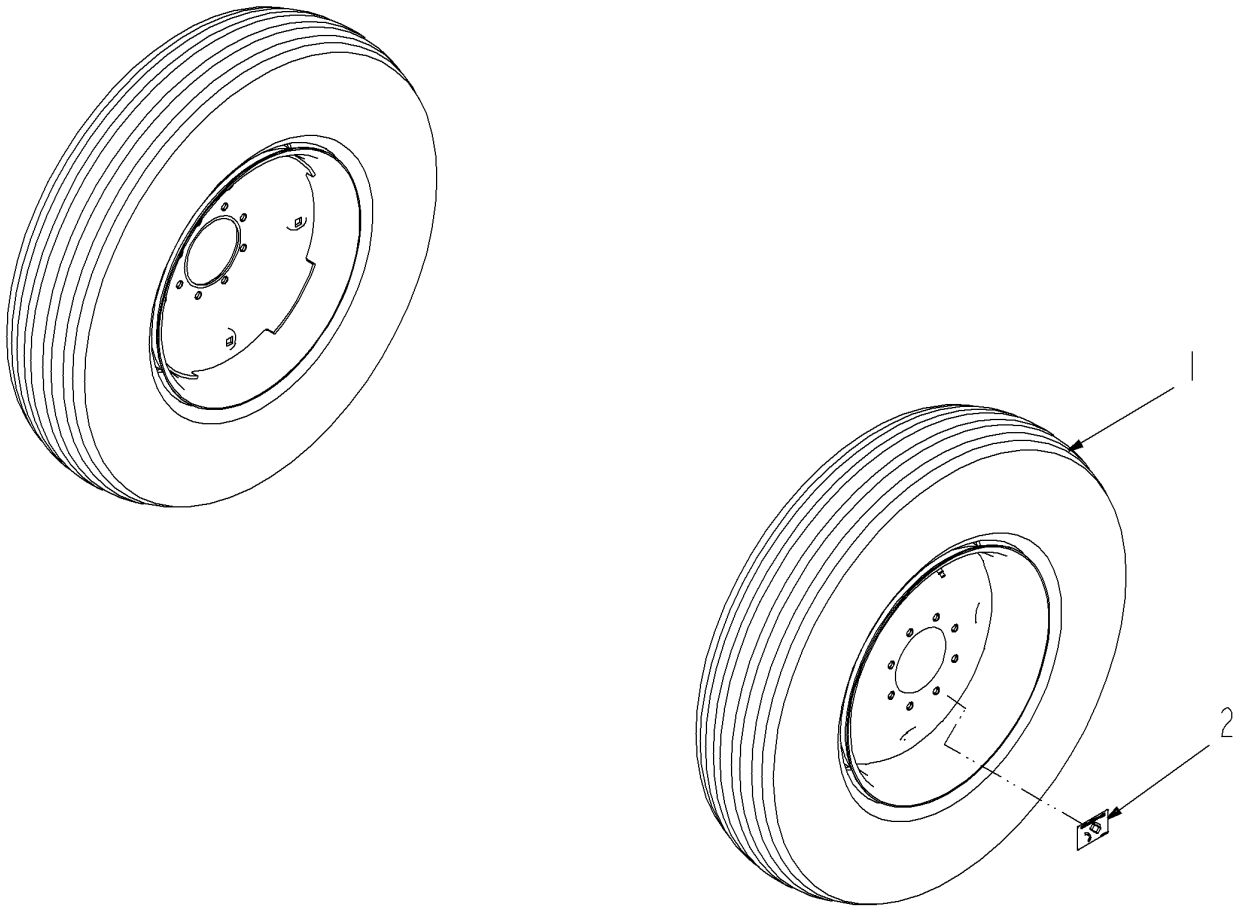

516081D1-02-R162-.TIF

Copyright © 2007 AGCO Corporation

TIRE INSTL - 9.00X24,GRY

ITEM	PART #	QTY	DESCRIPTION	COMMENTS
1	516062D1	2	TIRE ASM-9.00X24,GRY	[A] SEE PAGE 13-14
2	520019D1	2	DECAL-TORQUE 149	
	FOOTNOTE [A]		S/N ..Txx1001	
	FOOTNOTE		S/N ..Txx1001	

Copyright © 2007 AGCO Corporation

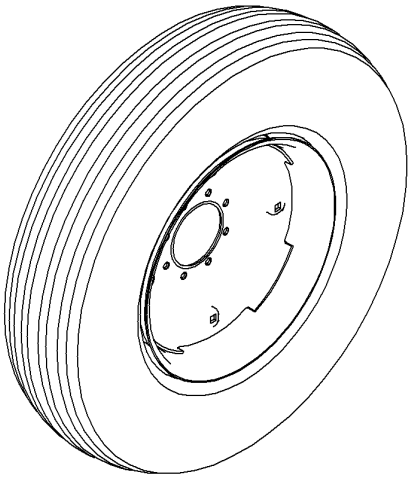

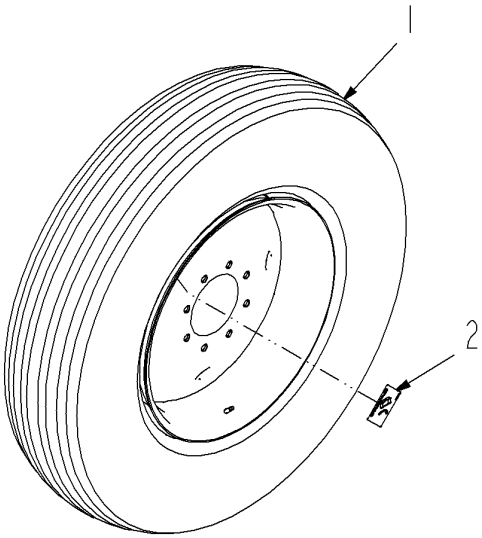

516082D1-03-R581-.TIF

Copyright © 2007 AGCO Corporation

TIRE INSTL - 9.00X24,GRY,FLD

ITEM	PART #	QTY	DESCRIPTION	COMMENTS
1	516063D1	2	TIRE ASM-9.00X24,GRY,FLD	[A] SEE PAGE 13-16
2	520019D1	2	DECAL-TORQUE 149	
	FOOTNOTE [A]		S/N ..Txx1001	
	FOOTNOTE		S/N ..Txx1001	

Copyright © 2007 AGCO Corporation

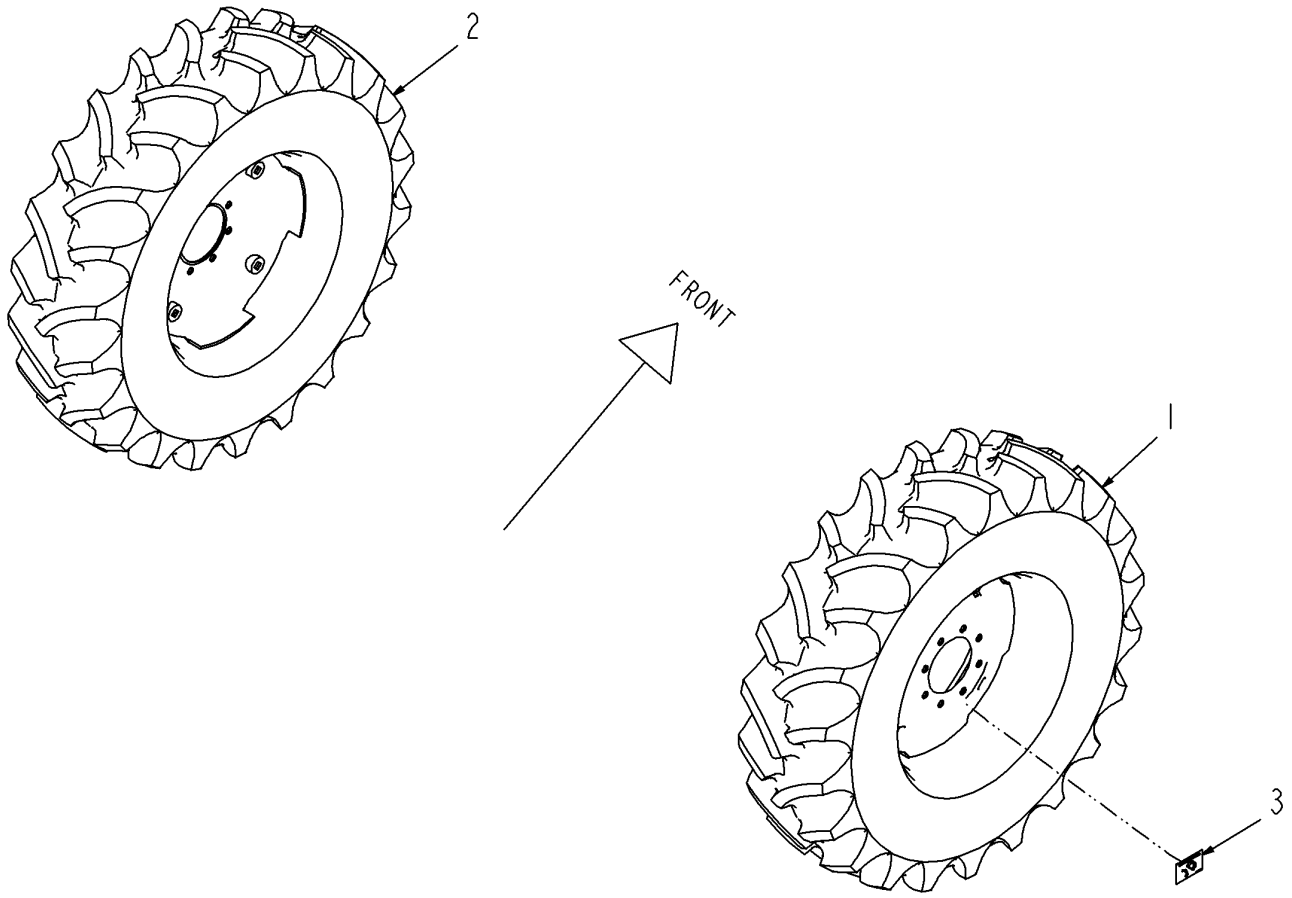

516083D1-03-R670-.TIF

Copyright © 2007 AGCO Corporation

TIRE INSTL - 320/85R24,GRY

ITEM	PART #	QTY	DESCRIPTION	COMMENTS
1	504433D1	1	TIRE ASM-320/85R24,LH,GRAY	SEE PAGE 13-10
2	504434D1	1	TIRE ASM-320/85R24,RH,GRAY	SEE PAGE 13-11
3	520019D1	2	DECAL-TORQUE 149	
	FOOTNOTE		S/N ..Txx1001	

Copyright © 2007 AGCO Corporation

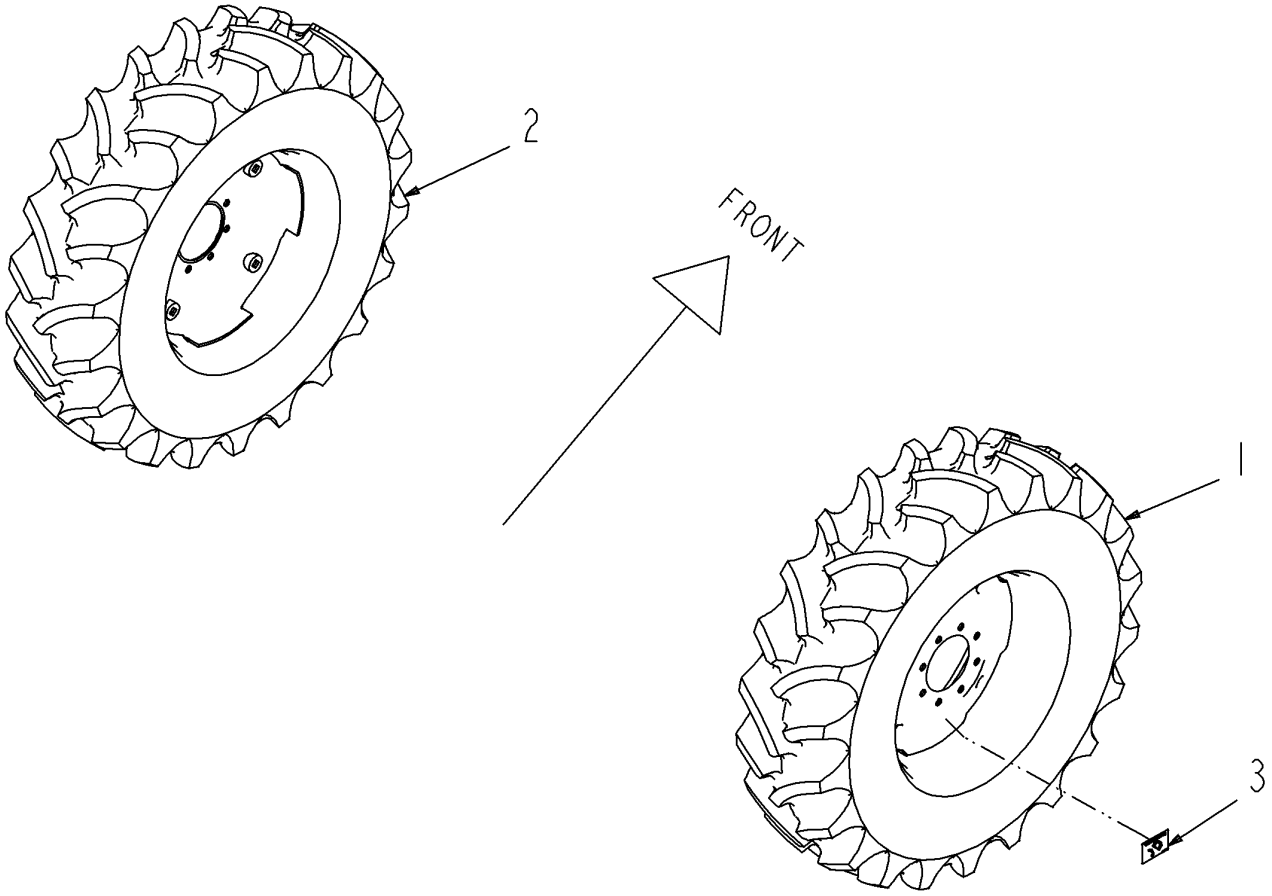

516084D1-04-R670-.TIF

Copyright © 2007 AGCO Corporation

TIRE INSTL - 320/85R24,GRY,FLD

ITEM	PART #	QTY	DESCRIPTION	COMMENTS
1	513396D1	1	TIRE ASM-320/85R24,LH,GRY,FLD	SEE PAGE 13-18
2	513397D1	1	TIRE ASM-320/85R24,RH,GRY,FLD	SEE PAGE 13-19
3	520019D1	2	DECAL-TORQUE 149	

Copyright © 2007 AGCO Corporation

DECAL INSTL - SPRAY	14-1
DECAL INSTL-CHAL,AT	14-2
DECAL INSTL-CHAL,AT	14-3
DECAL INSTL-CHAL,AT	14-4
DECAL INSTL-CAB, INSIDE,	14-5
DECAL INSTL-CAB, INSIDE,	14-6
DECAL INSTL-CHAL, 4460	14-7
DECAL INSTL - SUSPENSION	14-8
DECAL INSTL-CHAL, 4660	14-9
DECAL GP-4460, AT, CHAL	14-10
DECAL GP-4660, AT, CHAL	14-11
DECAL INSTL - SC 4XXX, NA	14-12
DECAL INSTL - SC 4XXX, NA	14-13
DECAL INSTL - SC 4XXX, NA	14-14
DECAL INSTL - SC 4XXX, NA	14-15
DECAL INSTL - SC 4XXX, NA	14-16
DECAL INSTL - SC 4XXX, INT	14-17
DECAL INSTL - SC 4XXX, INT	14-18
DECAL INSTL - SC 4XXX, INT	14-19
DECAL INSTL - SC 4XXX, INT	14-20
DECAL INSTL - SC 4XXX, INT	14-21

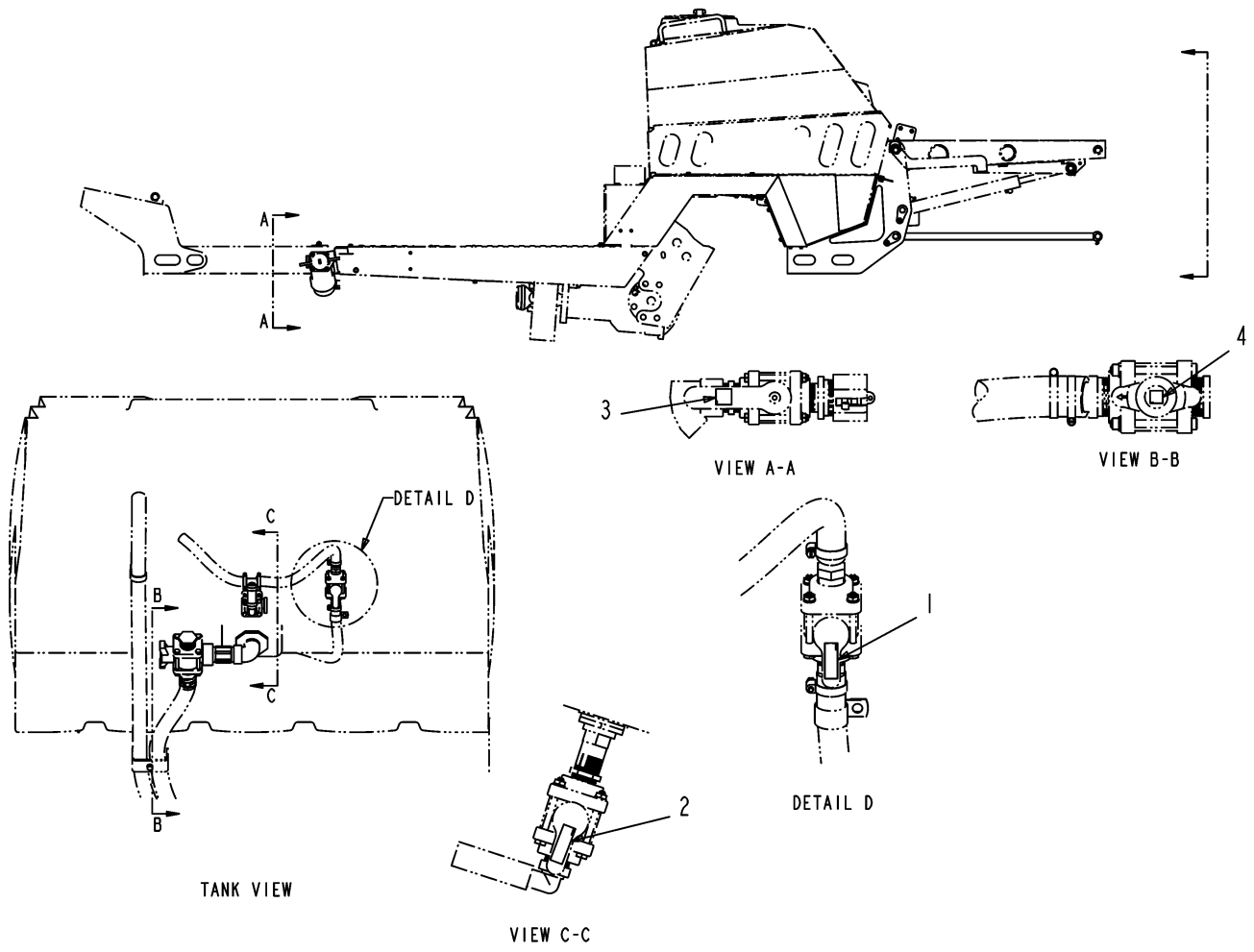

503819D1-01-M508-.TIF

Copyright © 2007 AGCO Corporation

DECAL INSTL - SPRAY

ITEM	PART #	QTY	DESCRIPTION	COMMENTS
1	6597954	1	DECAL-UP AGIT (ENG)	
2	6597955	1	DECAL-LOW AGIT	
3	6597956	1	DECAL-TANK FILL (ENG)	
4	6597957	1	DECAL-MAIN LINE (ENG)	

Copyright © 2007 AGCO Corporation

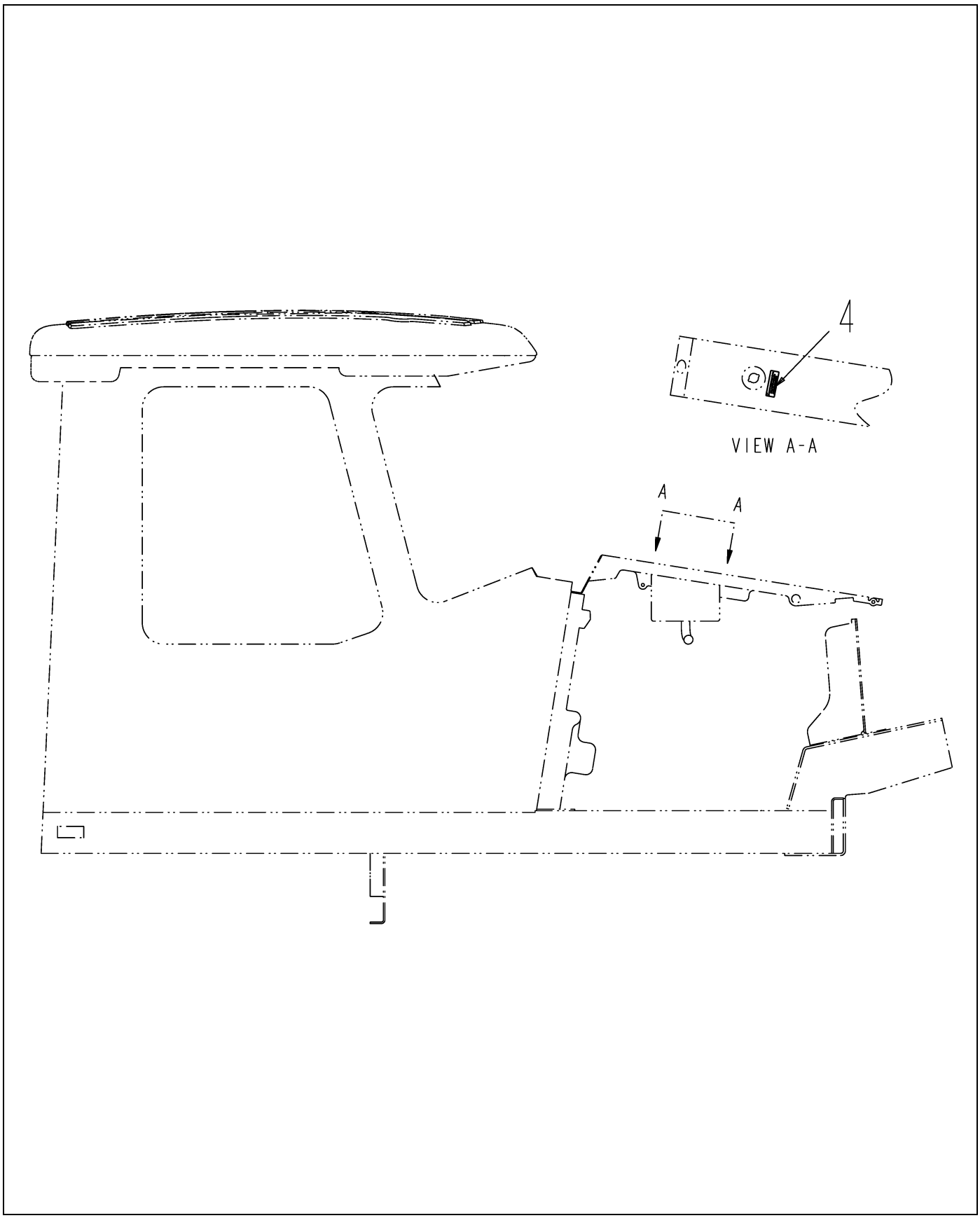

506056D1-02-N451-01.TIF

Copyright © 2007 AGCO Corporation

DECAL INSTL-CHAL,AT

ITEM	PART #	QTY	DESCRIPTION	COMMENTS
4	WR129978	1	DECAL-COOLANT ETHYLENE GLYCOL	
10	6626787	1	DECAL-LOCK,BOOM	

Copyright © 2007 AGCO Corporation

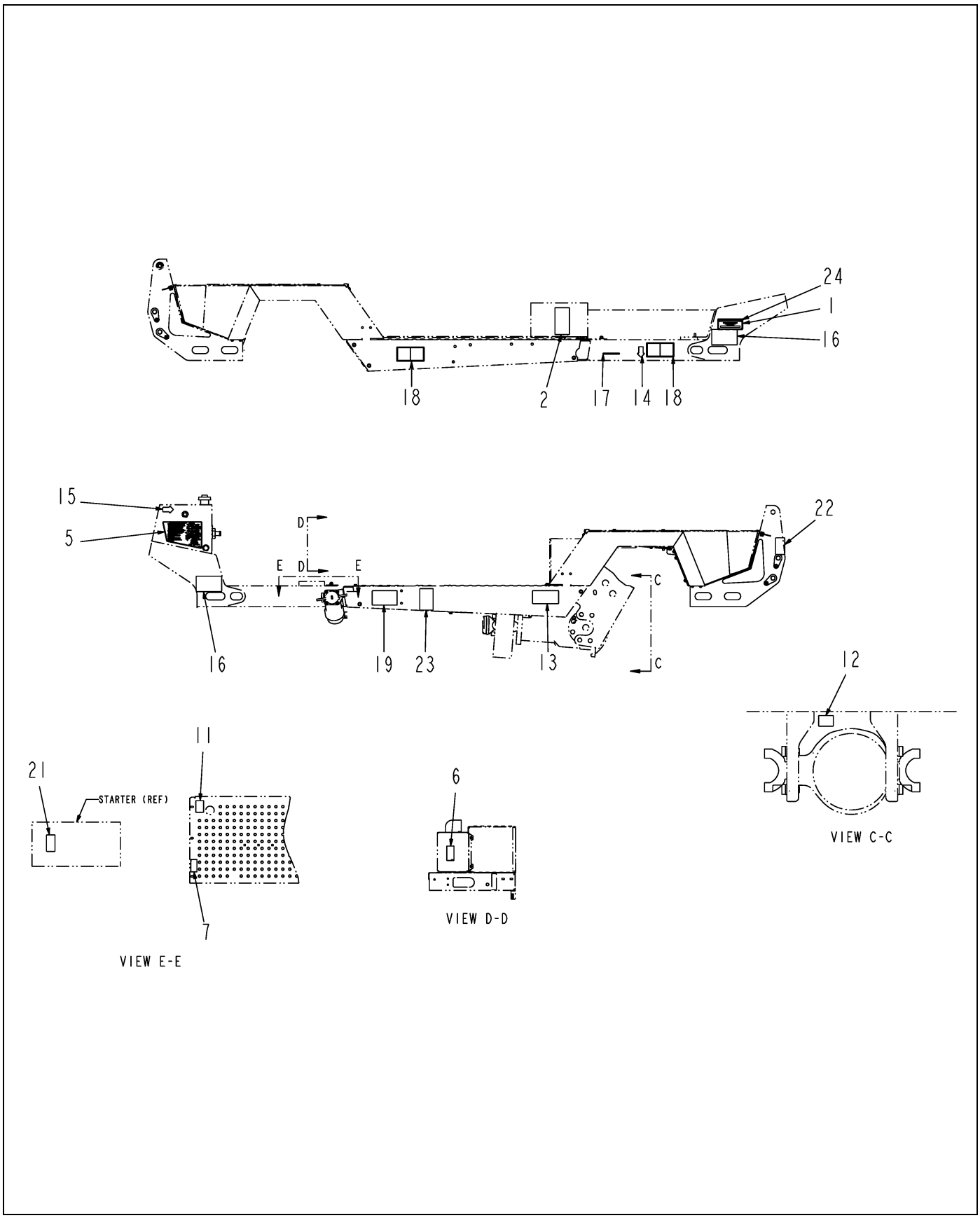

506056D1-02-N451-02.TIF

Copyright © 2007 AGCO Corporation

DECAL INSTL-CHAL,AT

ITEM	PART #	QTY	DESCRIPTION	COMMENTS
1	222-2281	1	PLATE - SERIAL NO.	
2	WR50955	1	DECAL-WARNING,BATTERY	
5	6802470	1	DECAL-FILL,HYD OIL	
6	6589739	1	DECAL-DIESEL (ENG)	
7	6597958	1	DECAL-BOOM,MANUAL (ENG)	
11	6626908	1	DECAL-WATER	
12	6627019	1	DECAL-SYNTHETIC OIL	
13	6627020	1	DECAL-SPIGOT	
14	6628550	1	DECAL-FUEL FILTER	
16	71379132	2	DECAL-WARNING,BELT,FAN,	
17	504951D1	-	STAMPING-PRIMARY PIN MARKING	
18	511128D1	2	WARNING - BURN HAZARD (INT)	
19	WR37156	1	DECAL-WARNING,HAZARDOUS	
21	WR37159	1	DECAL-DANGER,BY-PASS,	
22	WR37164	1	DECAL-WARNING,HIGH	
23	WR37166	1	DECAL-WARNING,FALL OFF,	
24	WR37369	4	TACK-CARBON ST- 31 SERIES	

Copyright © 2007 AGCO Corporation

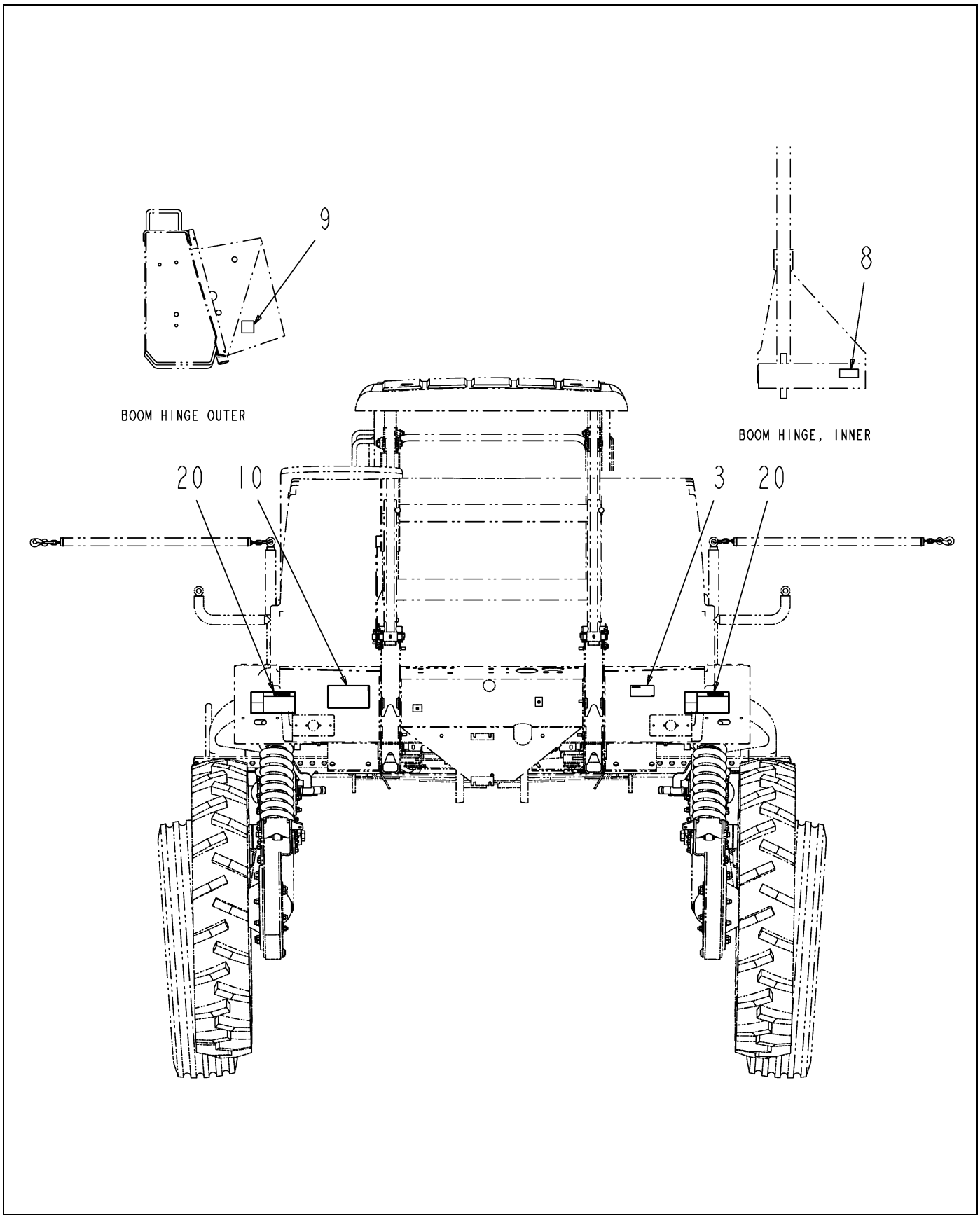

506056D1-02-N451-03.TIF

Copyright © 2007 AGCO Corporation

DECAL INSTL-CHAL,AT

ITEM	PART #	QTY	DESCRIPTION	COMMENTS
3	WR55537	1	DECAL-PATENT,SPRA COUPE	
8	6612234	2	REFLECTOR-RED	
9	6620015	2	SHEETING,REFLECTIVE-AMBER	
20	WR37158	2	DECAL-WARNING,CRUSHING,	

Copyright © 2007 AGCO Corporation

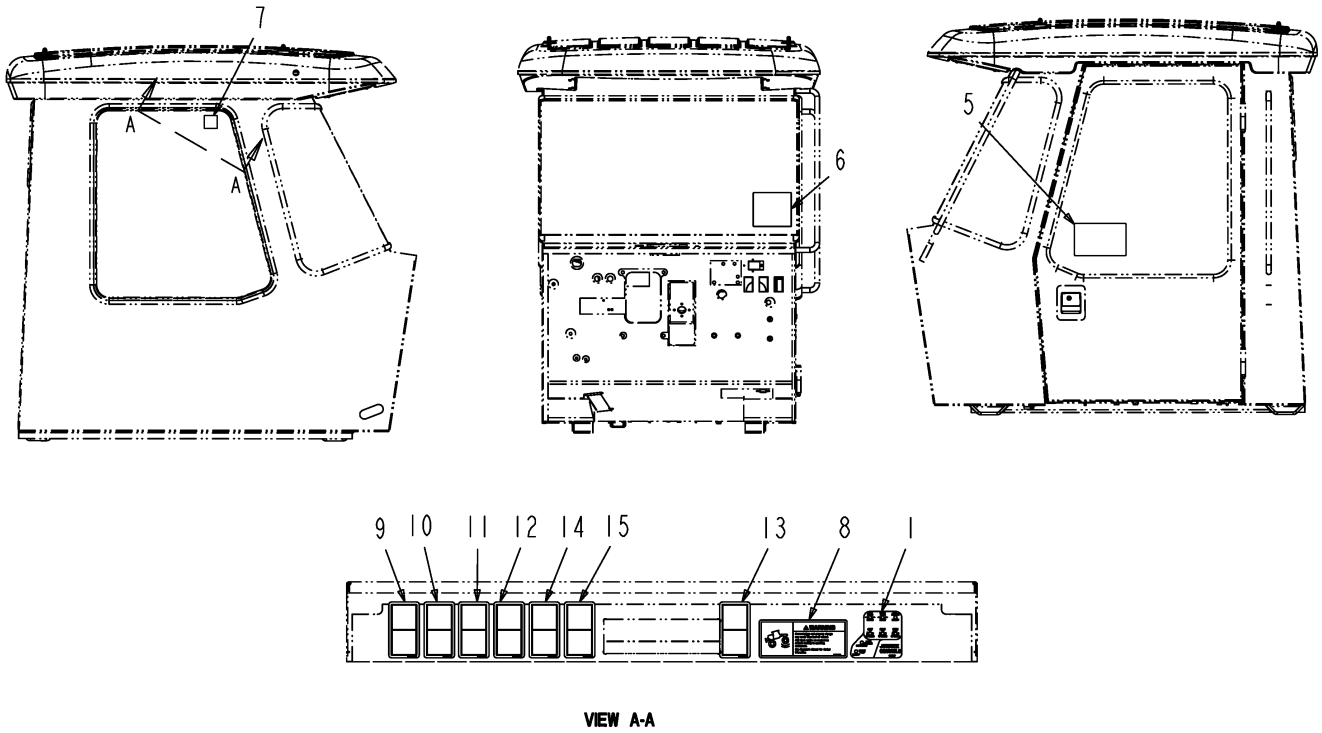

511164D1-04-N661-01.TIF

Copyright © 2007 AGCO Corporation

DECAL INSTL-CAB, INSIDE,

ITEM	PART #	QTY	DESCRIPTION	COMMENTS
1	WR129977	1	DECAL-JOYSTICK	
5	6802082	1	DECAL-WASHING	
6	6804165	1	DECAL-STATIC	
7	71389158	1	DECAL-LABEL-EXIT	
8	505992D1	1	DECAL-WARNING,FRONT WEIGHTS	
9	511108D1	1	WARNING - READ MANUAL	
10	511200D1	1	WARNING - WEAR SEATBELT	
11	511202D1	1	DANGER - ELECTROCUTION	
12	511204D1	1	WARNING - FALLING	
13	511206D1	1	WARNING - TURN OFF ENGINE	
14	511208D1	1	WARNING - TURN OFF ENGINE	
15	511210D1	1	WARNING - INHALATION	

Copyright © 2007 AGCO Corporation

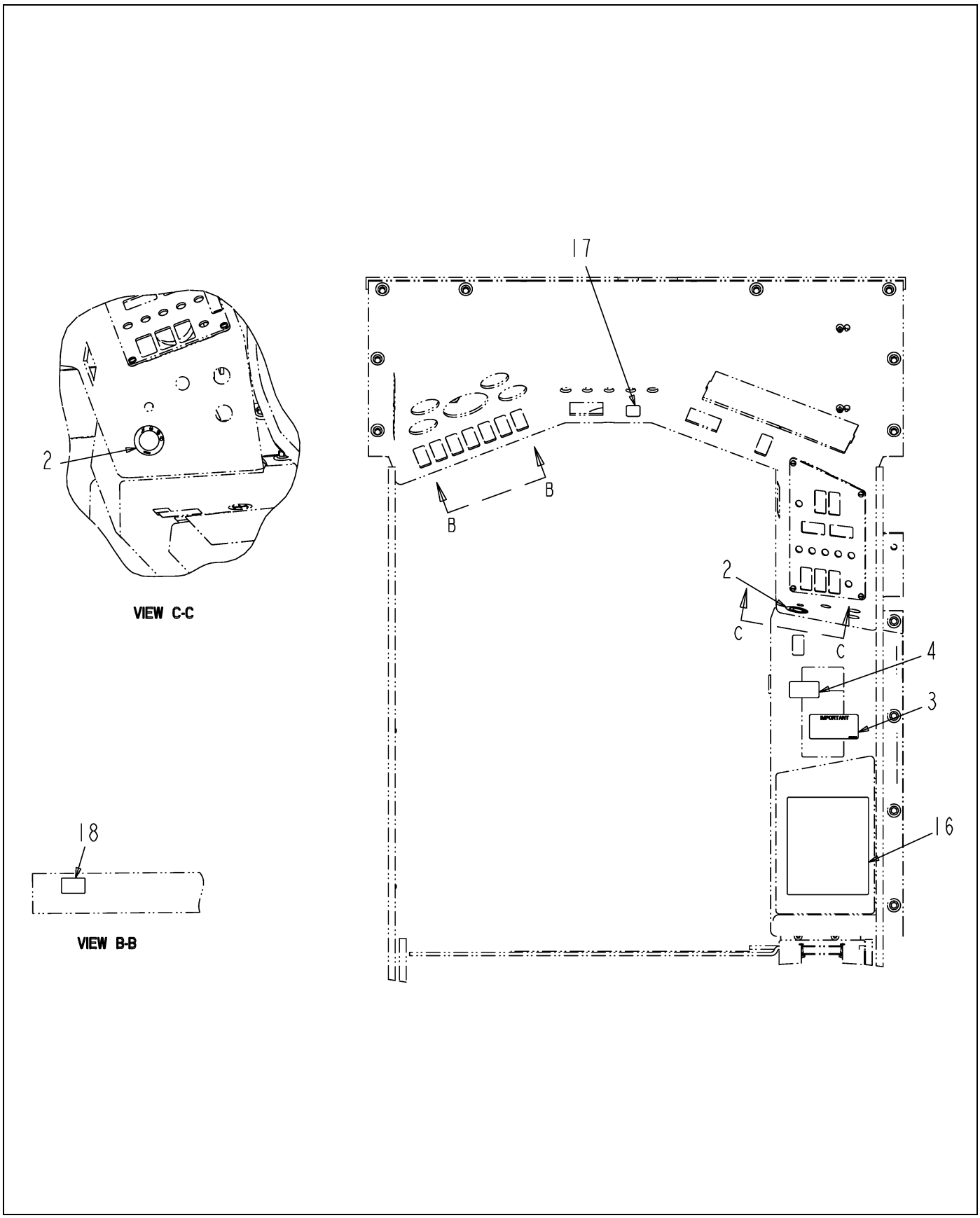

511164D1-04-N661-02.TIF

Copyright © 2007 AGCO Corporation

DECAL INSTL-CAB, INSIDE,

ITEM	PART #	QTY	DESCRIPTION	COMMENTS
2	AG135991	1	DECAL-SWITCH,IGNITION	
3	6529638	1	DECAL-ENGINE,IDLE DOWN	
4	6626817	1	DECAL-TURN SIGNAL	
16	512948D1	1	DECAL - FUSE BLOCK	
17	WR37255	1	DECAL-BRAKE PRESSURE	
18	WR55998	1	DECAL-WARNING,PARK BRAKE	

Copyright © 2007 AGCO Corporation

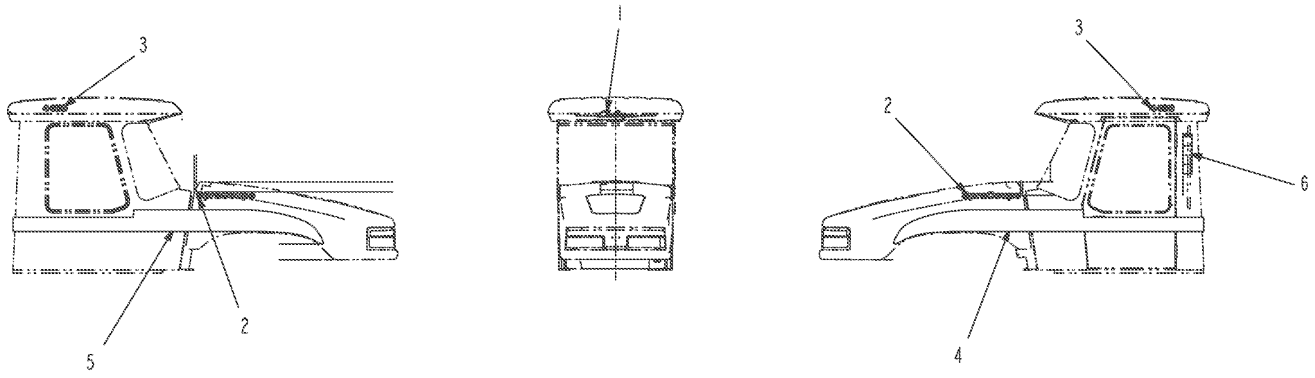

517515D1-01-N924-.TIF

Copyright © 2007 AGCO Corporation

DECAL INSTL-CHAL, 4460

ITEM	PART #	QTY	DESCRIPTION	COMMENTS
1	500749D1	1	FILM-CHALLENGER	
2	504038D1	2	DECAL-SPRA COUPE, CHAL	
3	516126D1	2	DECAL-4460	
4	516790D1	1	DECAL-SC4000,CHAL,LEFT	
5	516791D1	1	DECAL-SC4000,CHAL,RIGHT	
6	WR38198	1	DECAL-DANGER,CHEMICAL	

Copyright © 2007 AGCO Corporation

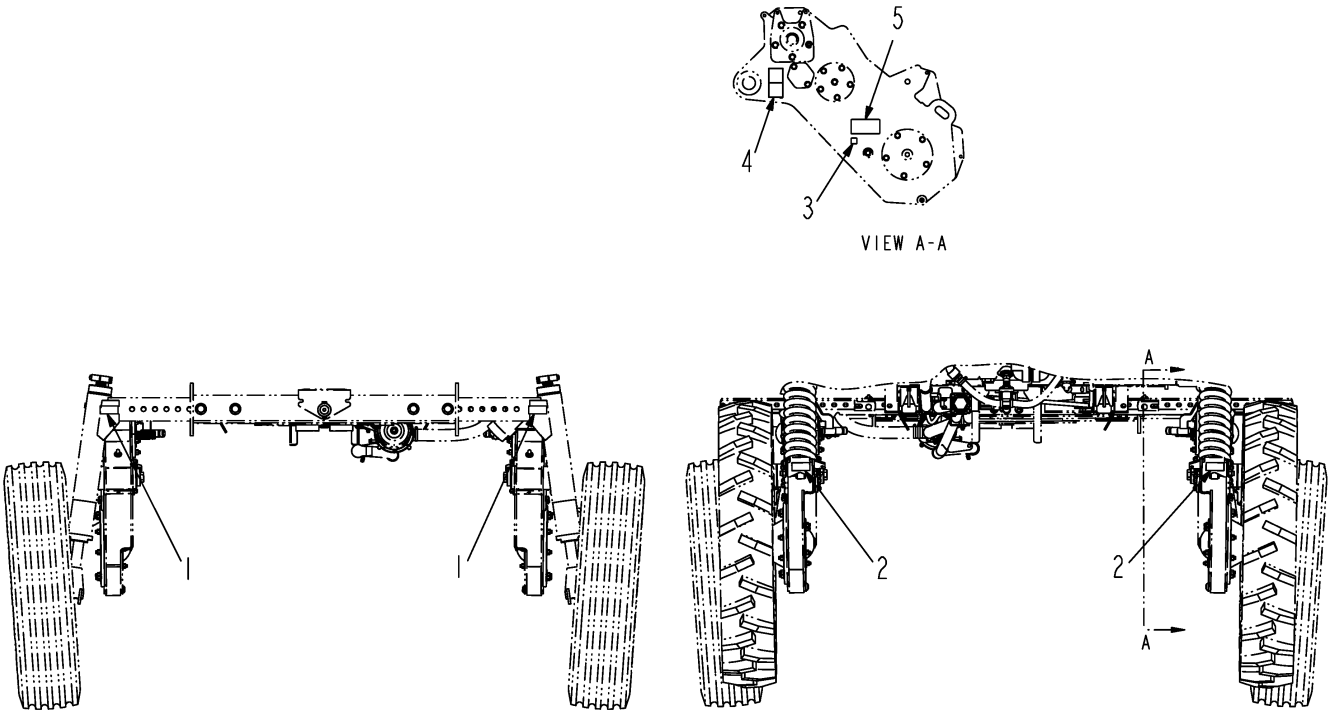

505529D1-03-N822-.TIF

Copyright © 2007 AGCO Corporation

DECAL INSTL - SUSPENSION

ITEM	PART #	QTY	DESCRIPTION	COMMENTS
1	6612233	2	REFLECTOR-AMBER	
2	6612234	2	REFLECTOR-RED	
3	6802477	2	DECAL-CHAINCASE OIL	
4	514534D1	2	DECAL-DRIVELINE HAZARD (INT)	
5	WR55673	2	DECAL TO DISCONNECT,	

Copyright © 2007 AGCO Corporation

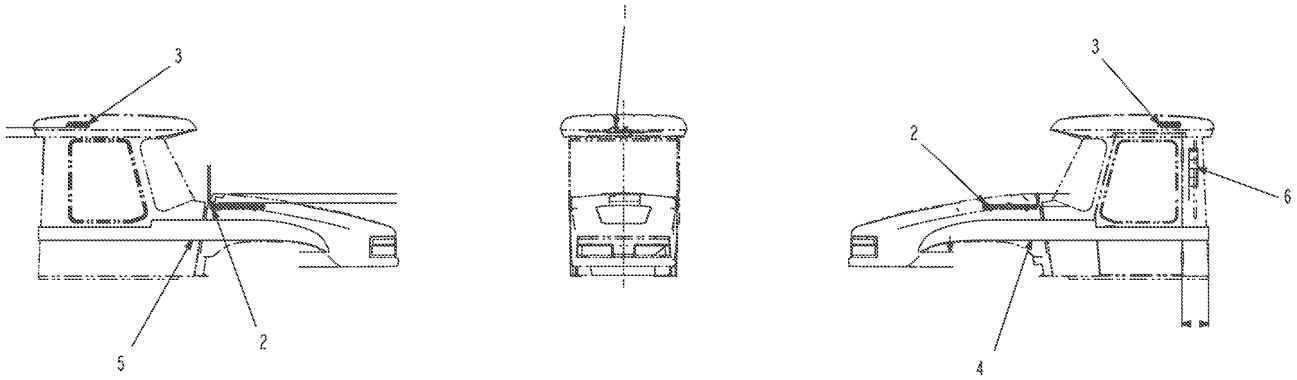

517516D1-01-N924-.TIF

Copyright © 2007 AGCO Corporation

DECAL INSTL-CHAL, 4660

ITEM	PART #	QTY	DESCRIPTION	COMMENTS
1	500749D1	1	FILM-CHALLENGER	
2	504038D1	2	DECAL-SPRA COUPE, CHAL	
3	516125D1	2	DECAL-4660	
4	516790D1	1	DECAL-SC4000,CHAL,LEFT	
5	516791D1	1	DECAL-SC4000,CHAL,RIGHT	
6	WR38198	1	DECAL-DANGER,CHEMICAL	

Copyright © 2007 AGCO Corporation

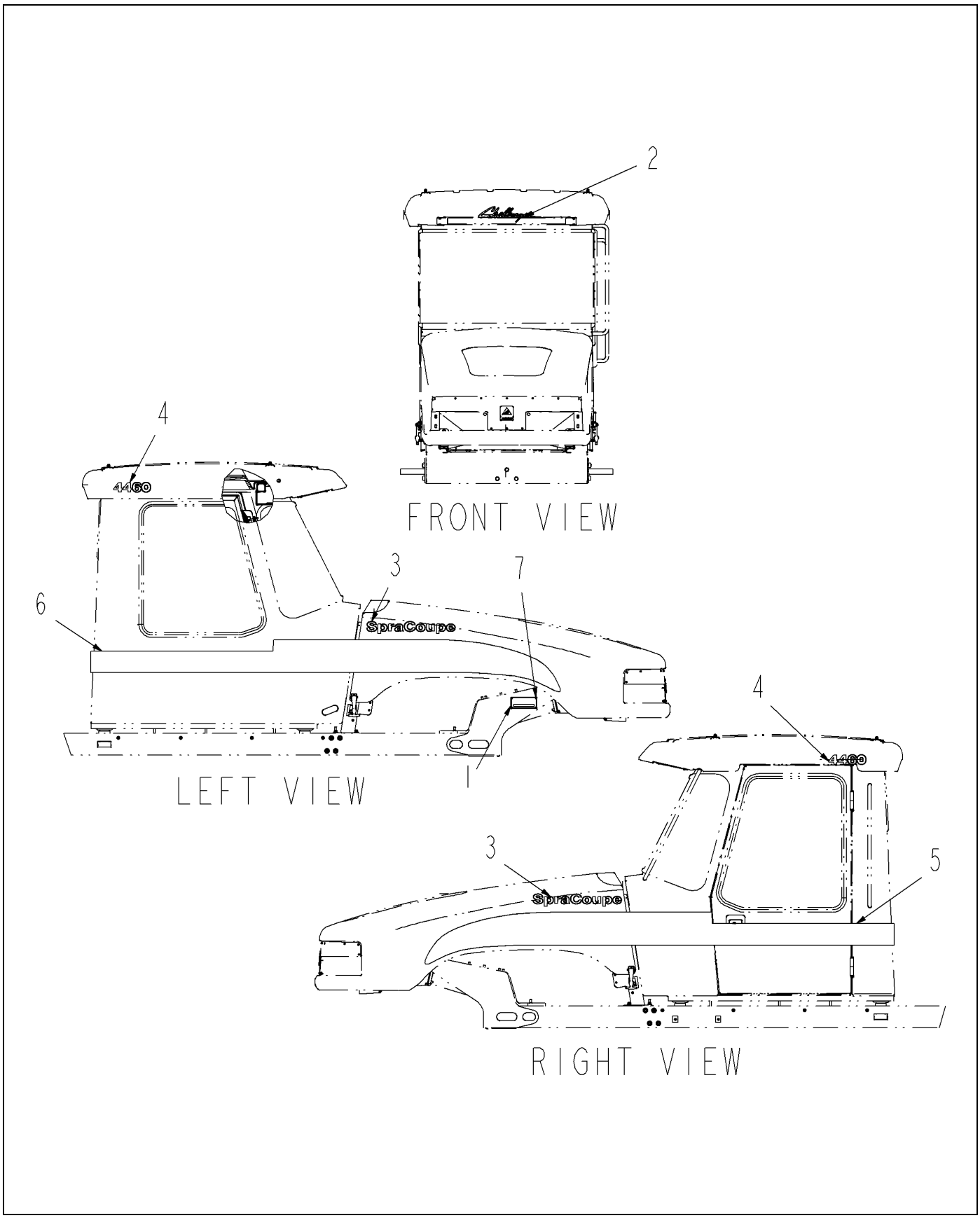

519680D1-01-R394-.TIF

Copyright © 2007 AGCO Corporation

DECAL GP-4460, AT, CHAL

ITEM	PART #	QTY	DESCRIPTION	COMMENTS
1	222-2281	1	PLATE - SERIAL NO.	
2	500749D1	1	FILM-CHALLENGER	
3	504038D1	2	DECAL-SPRA COUPE, CHAL	
4	516126D1	2	DECAL-4460	
5	516790D1	1	DECAL-SC4000,CHAL,LEFT	
6	516791D1	1	DECAL-SC4000,CHAL,RIGHT	
7	WR37369	4	TACK-CARBON ST- 31 SERIES	

Copyright © 2007 AGCO Corporation

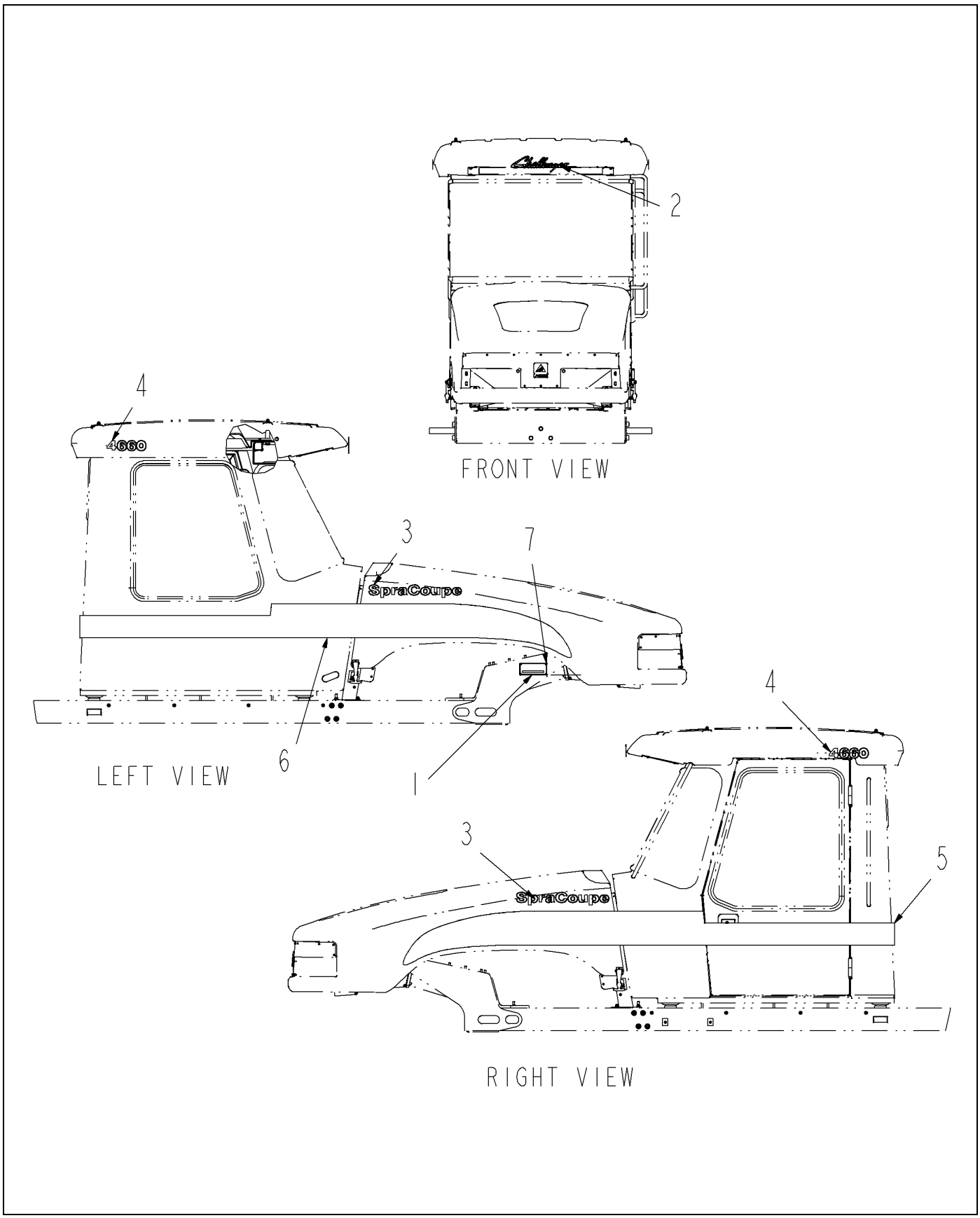

519681D1-01-R394-.TIF

Copyright © 2007 AGCO Corporation

DECAL GP-4660, AT, CHAL

ITEM	PART #	QTY	DESCRIPTION	COMMENTS
1	222-2281	1	PLATE - SERIAL NO.	
2	500749D1	1	FILM-CHALLENGER	
3	504038D1	2	DECAL-SPRA COUPE, CHAL	
4	516125D1	2	DECAL-4660	
5	516790D1	1	DECAL-SC4000,CHAL,LEFT	
6	516791D1	1	DECAL-SC4000,CHAL,RIGHT	
7	WR37369	4	TACK-CARBON ST- 31 SERIES	

Copyright © 2007 AGCO Corporation

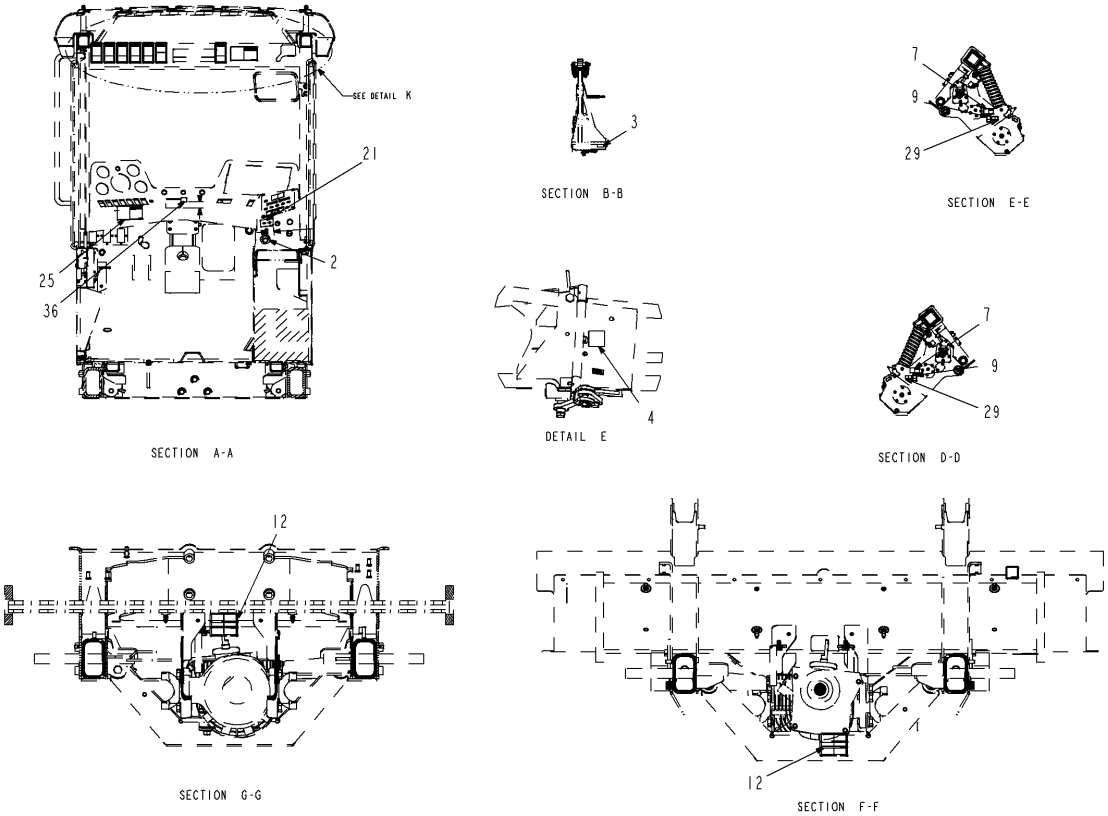

519674D1-01-R394-02.TIF

Copyright © 2007 AGCO Corporation

DECAL INSTL - SC 4XXX, NA

ITEM	PART #	QTY	DESCRIPTION	COMMENTS
2	AG135991	1	DECAL-SWITCH,IGNITION	
3	6612234	4	REFLECTOR-RED	
7	6620015	2	SHEETING,REFLECTIVE-AMBER	
9	511107D1	3	WARNING - READ MANUAL	
12	511147D1	2	DECAL-TRANS OIL FILL	
21	519603D1	1	DECAL-TURN SIGNAL	
25	519661D1	1	DECAL-PARK BRAKE (NA)	
29	520098D1	2	DECAL-HYDRAULIC OIL/ MANUAL	
36	WR37255	1	DECAL-BRAKE PRESSURE	

Copyright © 2007 AGCO Corporation

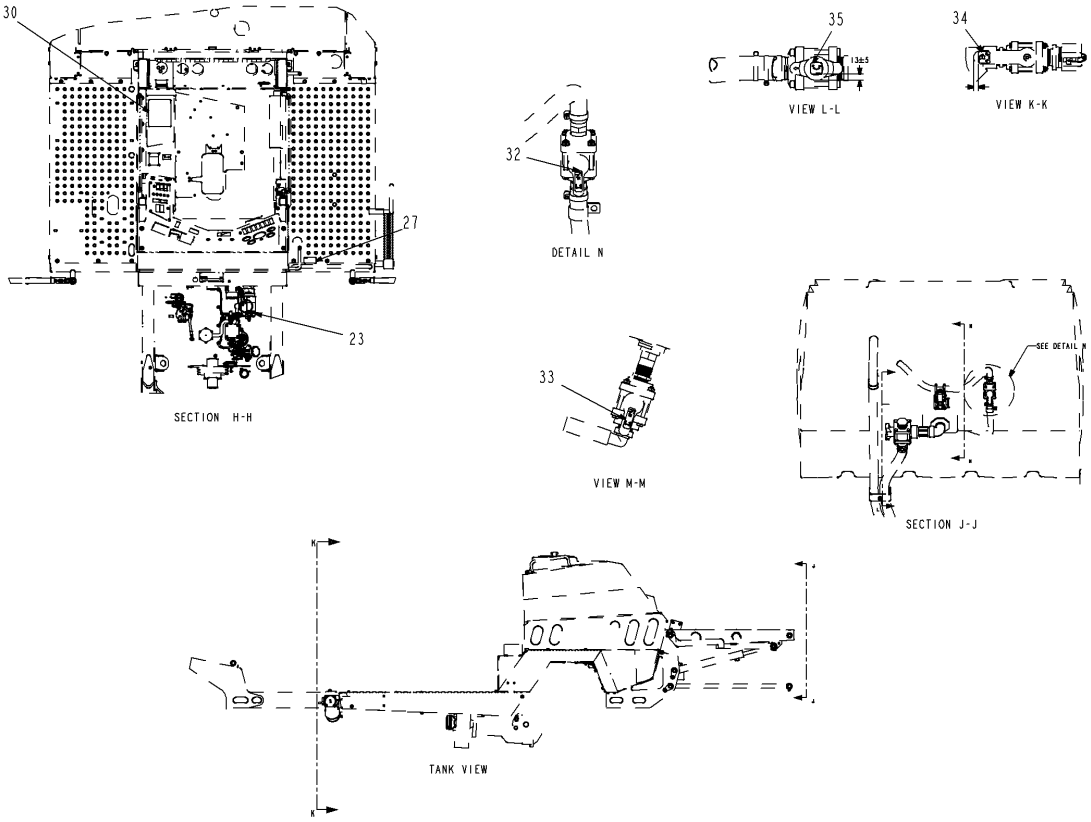

519674D1-01-R394-03.TIF

Copyright © 2007 AGCO Corporation

DECAL INSTL - SC 4XXX, NA

ITEM	PART #	QTY	DESCRIPTION	COMMENTS
23	519610D1	1	DECAL-ROLL OVER (NA)	
27	520096D1	1	DECAL-MANUAL FOLD BOOM	
30	520099D1	1	DECAL-FUSE PANEL, SC4000	
32	521049D1	1	DECAL-UPPER AGITATION	
33	521050D1	1	DECAL-LOWER AGITATION	
34	521051D1	1	DECAL-TANK FILL	
35	521052D1	1	DECAL-MAIN LINE	

Copyright © 2007 AGCO Corporation

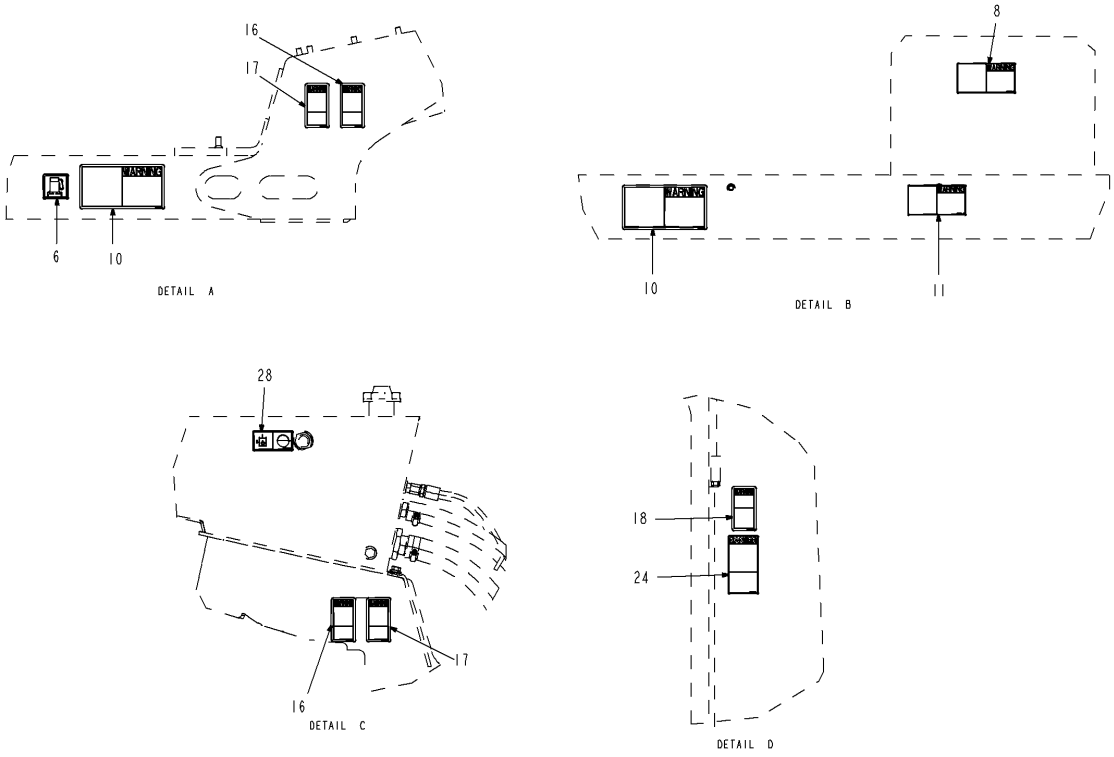

519674D1-01-R394-04.TIF

Copyright © 2007 AGCO Corporation

DECAL INSTL - SC 4XXX, NA

ITEM	PART #	QTY	DESCRIPTION	COMMENTS
6	501103D1	1	FILM - INST (FUEL FILTER)	
8	511095D1	1	DECAL-EXPLOSION HAZARD (NA)	
10	511127D1	2	WARNING - BURN HAZARD (NA)	
11	511143D1	1	DECAL-PRESSURIZED FLUID (INT)	
16	511205D1	3	WARNING - TURN OFF ENGINE	
17	511207D1	3	WARNING - TURN OFF ENGINE	
18	511209D1	2	WARNING - INHALATION	
24	519659D1	1	DECAL-POISONUS GAS (NA)	
28	520097D1	1	DECAL-HYDRALIC OIL LEVEL	

Copyright © 2007 AGCO Corporation

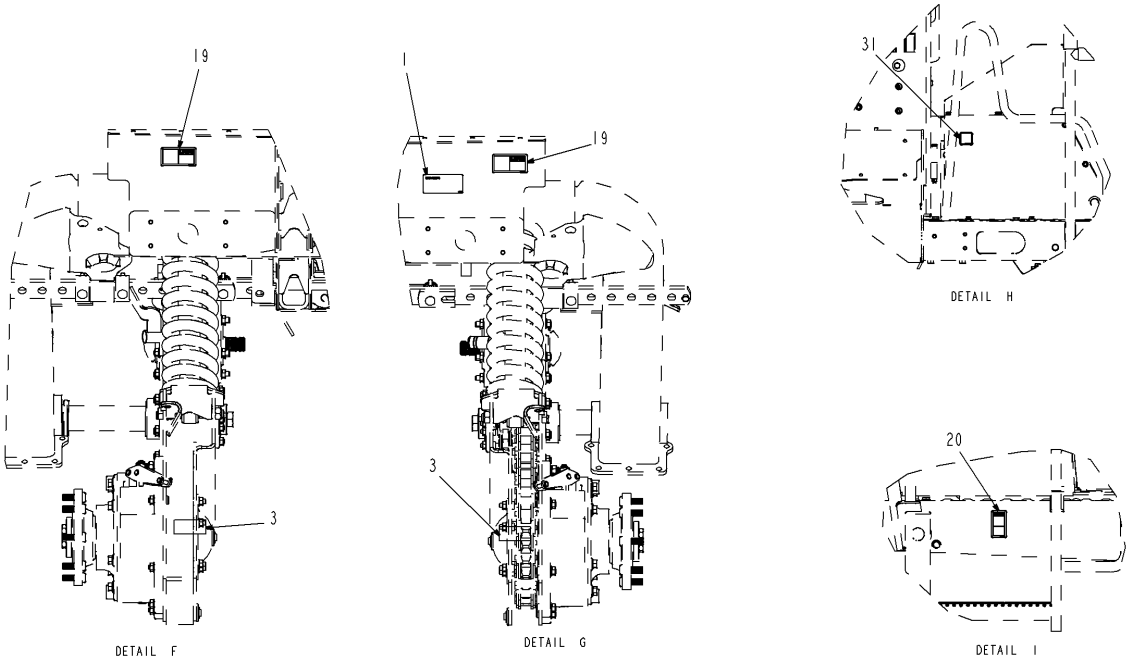

519674D1-01-R394-05.TIF

Copyright © 2007 AGCO Corporation

DECAL INSTL - SC 4XXX, NA

ITEM	PART #	QTY	DESCRIPTION	COMMENTS
1	WR55537	1	DECAL-PATENT,SPRA COUPE	
3	6612234	4	REFLECTOR-RED	
19	511412D1	2	CRUSH HAZARD (NA)	
20	511415D1	1	WARNING - FALL HAZARD (NA)	
31	520100D1	1	DECAL-DIESEL FUEL	

Copyright © 2007 AGCO Corporation

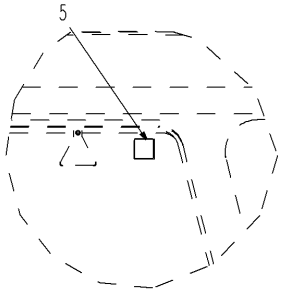

DETAIL J

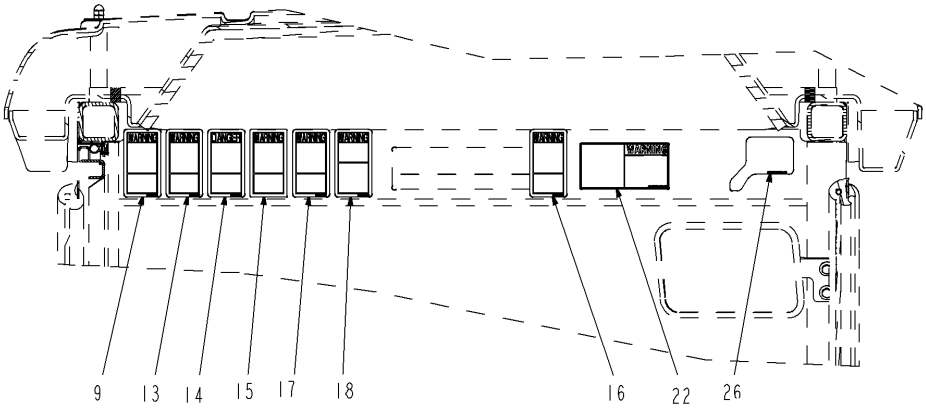

DETAIL K

519674D1-01-R394-06.TIF

Copyright © 2007 AGCO Corporation

DECAL INSTL - SC 4XXX, NA

ITEM	PART #	QTY	DESCRIPTION	COMMENTS
5	71389158	1	DECAL-LABEL-EXIT	
9	511107D1	3	WARNING - READ MANUAL	
13	511199D1	1	WARNING - WEAR SEATBELT	
14	511201D1	1	DANGER - ELECTROCUTION	
15	511203D1	1	WARNING - FALLING	
16	511205D1	3	WARNING - TURN OFF ENGINE	
17	511207D1	3	WARNING - TURN OFF ENGINE	
18	511209D1	2	WARNING - INHALATION	
22	519604D1	1	DECAL-FRONT WEIGHTS (NA)	
26	520095D1	1	DECAL-HANDLE	

Copyright © 2007 AGCO Corporation

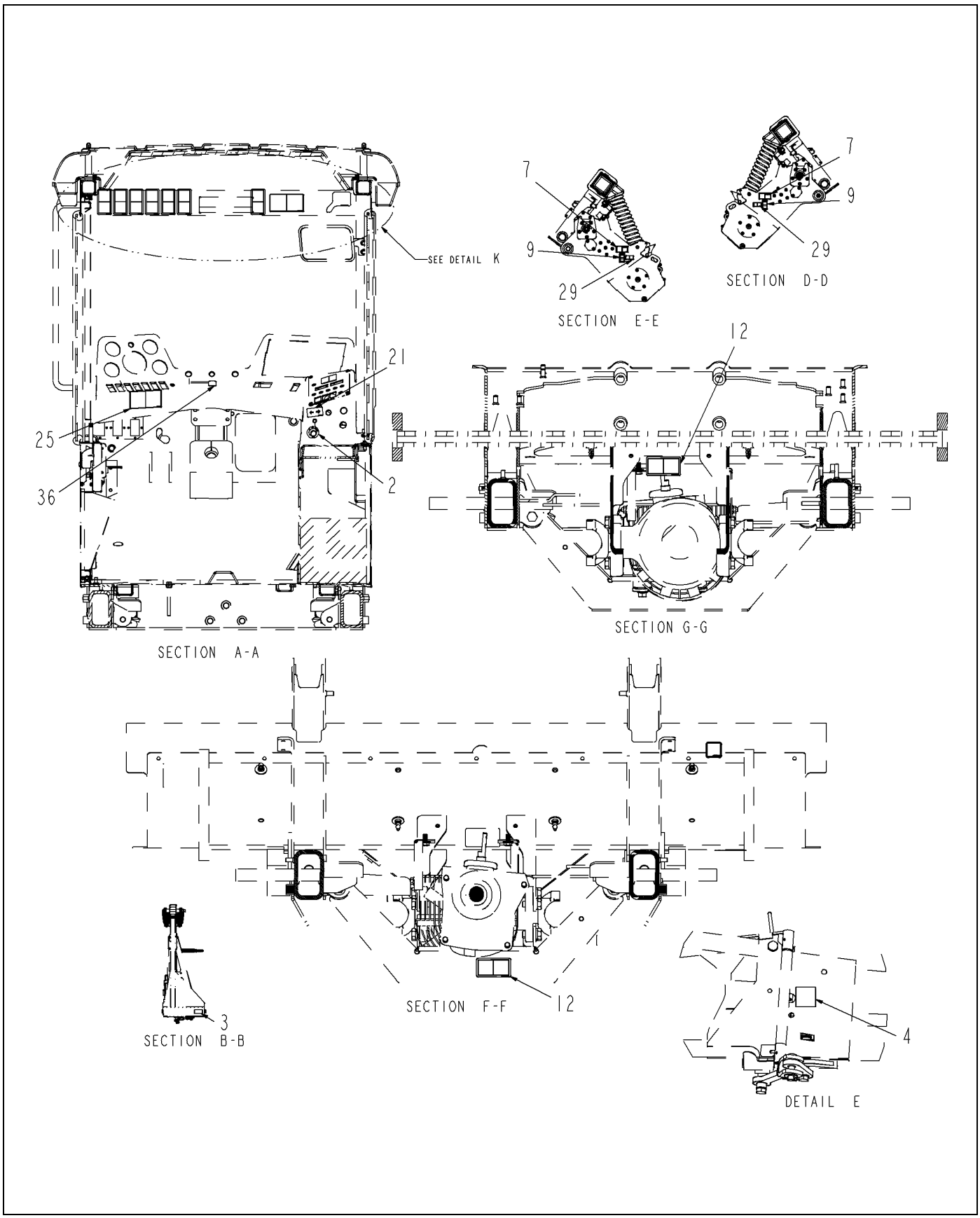

519675D1-01-R394-02.TIF

Copyright © 2007 AGCO Corporation

DECAL INSTL - SC 4XXX, INT

ITEM	PART #	QTY	DESCRIPTION	COMMENTS
2	AG135991	1	DECAL-SWITCH,IGNITION	
3	6612234	4	REFLECTOR-RED	
7	6620015	2	SHEETING,REFLECTIVE-AMBER	
9	511108D1	3	WARNING - READ MANUAL	
12	511147D1	2	DECAL-TRANS OIL FILL	
21	519603D1	1	DECAL-TURN SIGNAL	
25	519662D1	1	DECAL-PARK BRAKE (INT)	
29	520098D1	2	DECAL-HYDRAULIC OIL/ MANUAL	
36	WR37255	1	DECAL-BRAKE PRESSURE	

Copyright © 2007 AGCO Corporation

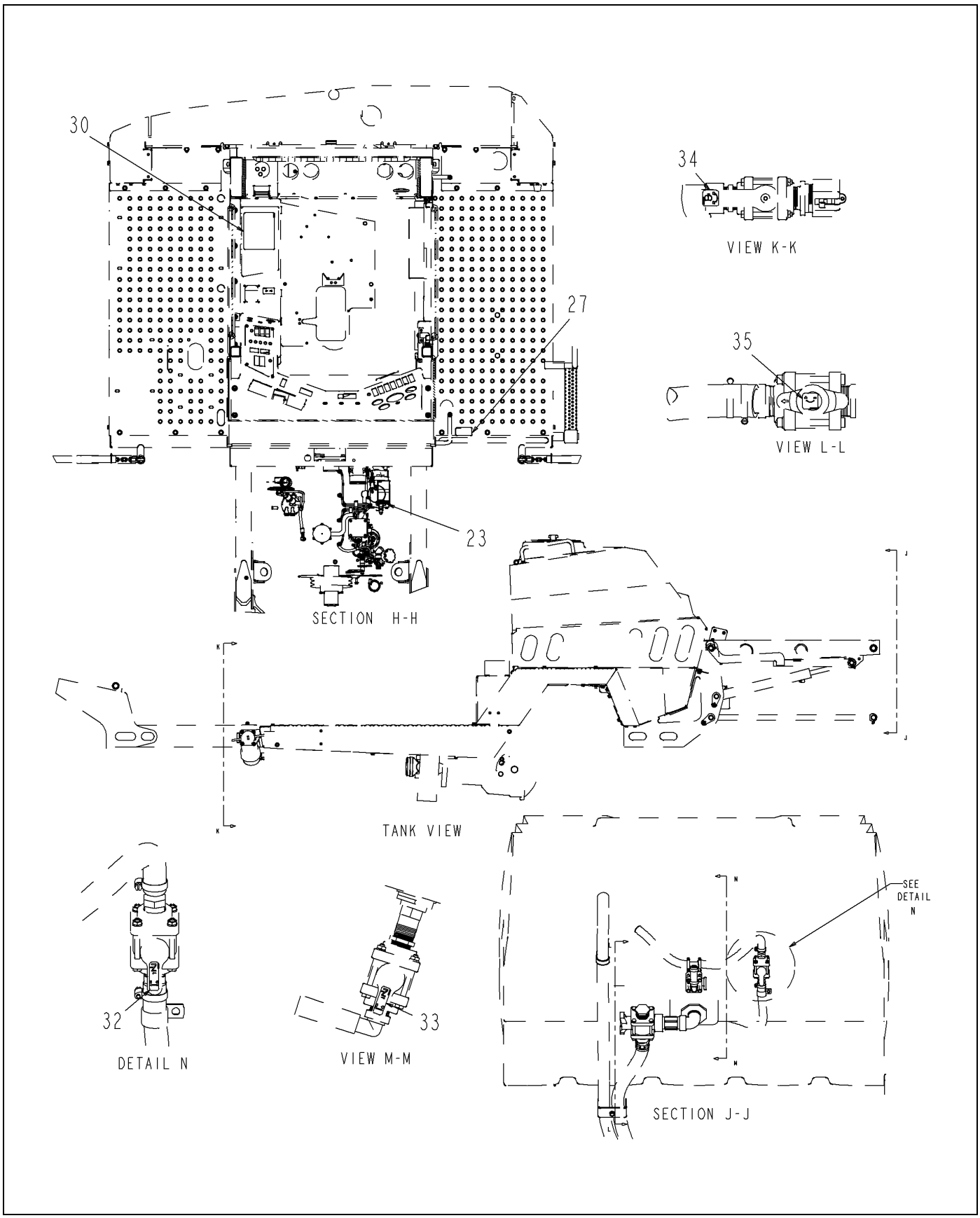

519675D1-01-R394-03.TIF

Copyright © 2007 AGCO Corporation

DECAL INSTL - SC 4XXX, INT

ITEM	PART #	QTY	DESCRIPTION	COMMENTS
23	519611D1	1	DECAL-ROLL OVER (INT)	
27	520096D1	1	DECAL-MANUAL FOLD BOOM	
30	520099D1	1	DECAL-FUSE PANEL, SC4000	
32	521049D1	1	DECAL-UPPER AGITATION	
33	521050D1	1	DECAL-LOWER AGITATION	
34	521051D1	1	DECAL-TANK FILL	
35	521052D1	1	DECAL-MAIN LINE	

Copyright © 2007 AGCO Corporation

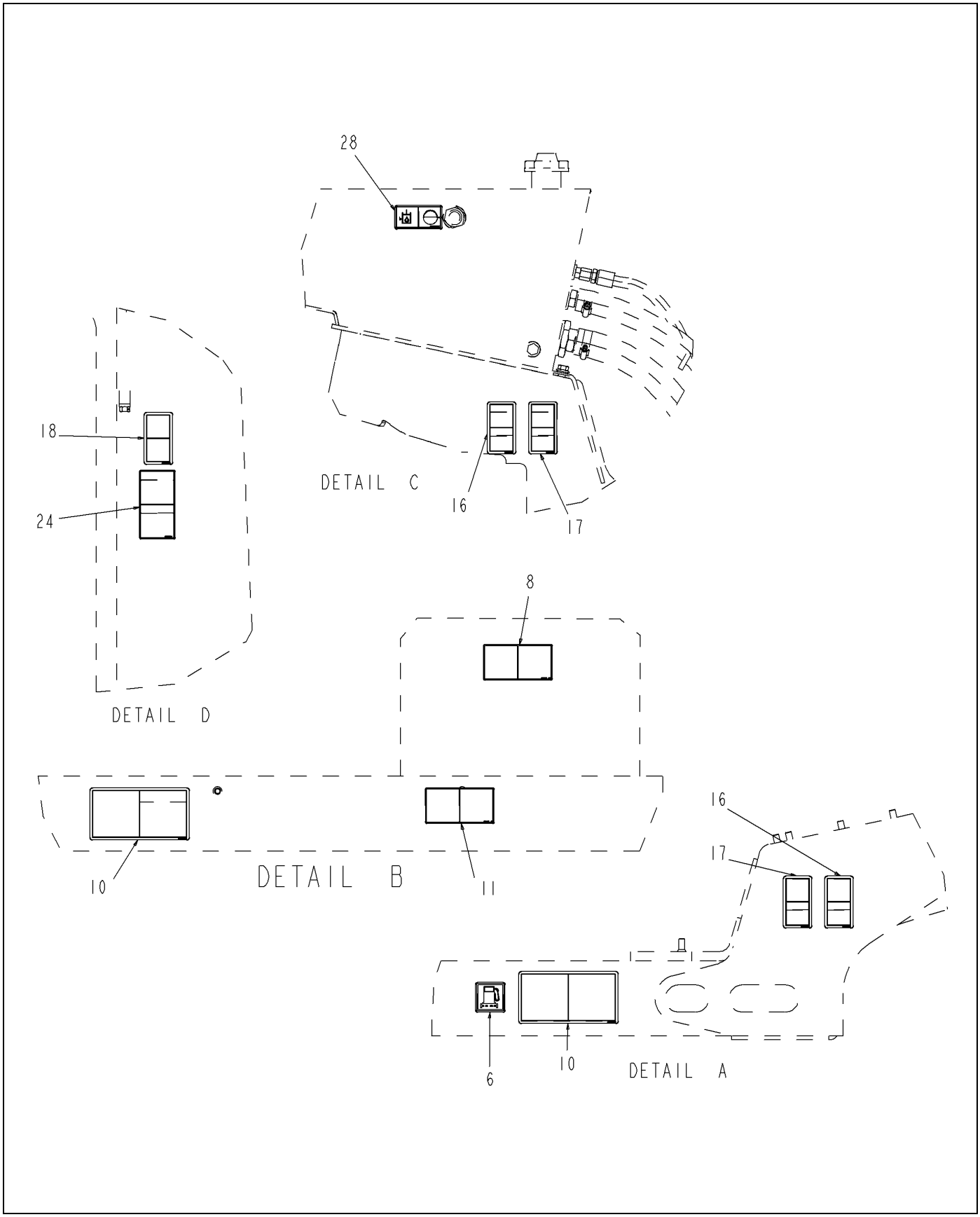

519675D1-01-R394-04.TIF

Copyright © 2007 AGCO Corporation

DECAL INSTL - SC 4XXX, INT

ITEM	PART #	QTY	DESCRIPTION	COMMENTS
6	501103D1	1	FILM - INST (FUEL FILTER)	
8	511096D1	1	DECAL-EXPLOSION HAZARD (INT)	
10	511128D1	2	WARNING - BURN HAZARD (INT)	
11	511144D1	1	DECAL-PRESSURIZED FLUID (INT)	
16	511206D1	3	WARNING - TURN OFF ENGINE	
17	511208D1	3	WARNING - TURN OFF ENGINE	
18	511210D1	2	WARNING - INHALATION	
24	519660D1	1	DECAL-POISONUS GAS (INT)	
28	520097D1	1	DECAL-HYDRALIC OIL LEVEL	

Copyright © 2007 AGCO Corporation

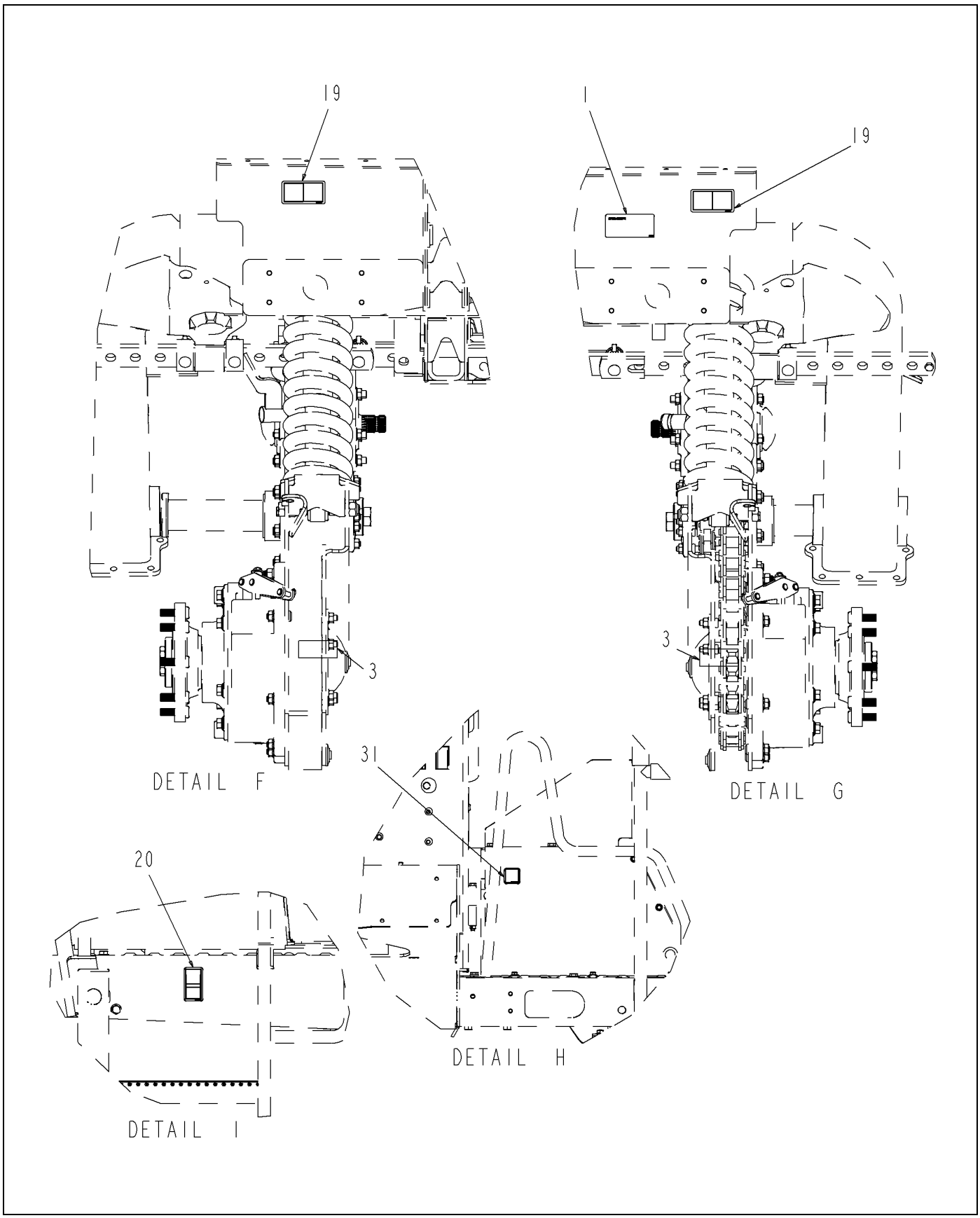

519675D1-01-R394-05.TIF

Copyright © 2007 AGCO Corporation

DECAL INSTL - SC 4XXX, INT

ITEM	PART #	QTY	DESCRIPTION	COMMENTS
1	WR55537	1	DECAL-PATENT,SPRA COUPE	
3	6612234	4	REFLECTOR-RED	
19	511413D1	2	CRUSH HAZARD (INT)	
20	511416D1	1	WARNING - FALL HAZARD (INT)	
31	520100D1	1	DECAL-DIESEL FUEL	

Copyright © 2007 AGCO Corporation

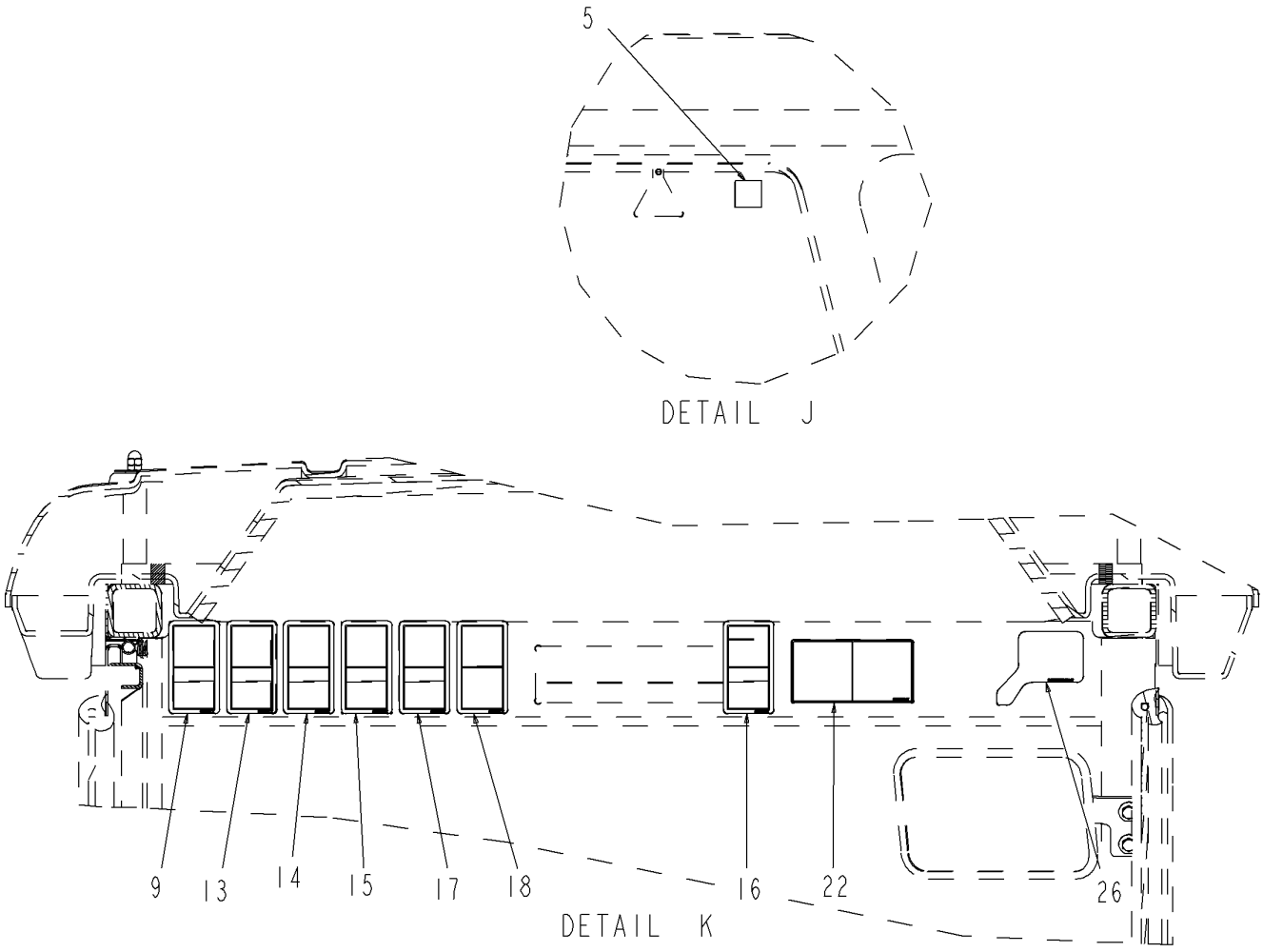

519675D1-01-R394-06.TIF

Copyright © 2007 AGCO Corporation

DECAL INSTL - SC 4XXX, INT

ITEM	PART #	QTY	DESCRIPTION	COMMENTS
5	71389158	1	DECAL-LABEL-EXIT	
9	511108D1	3	WARNING - READ MANUAL	
13	511200D1	1	WARNING - WEAR SEATBELT	
14	511202D1	1	DANGER - ELECTROCUTION	
15	511204D1	1	WARNING - FALLING	
16	511206D1	3	WARNING - TURN OFF ENGINE	
17	511208D1	3	WARNING - TURN OFF ENGINE	
18	511210D1	2	WARNING - INHALATION	
22	519605D1	1	DECAL-FRONT WEIGHTS (INT)	
26	520095D1	1	DECAL-HANDLE	

Copyright © 2007 AGCO Corporation

KIT-LIGHTBAR,RGL600T 15-1

Please refer to the Bill Of Material on the opposite page for related Installations, Assemblies, or Parts

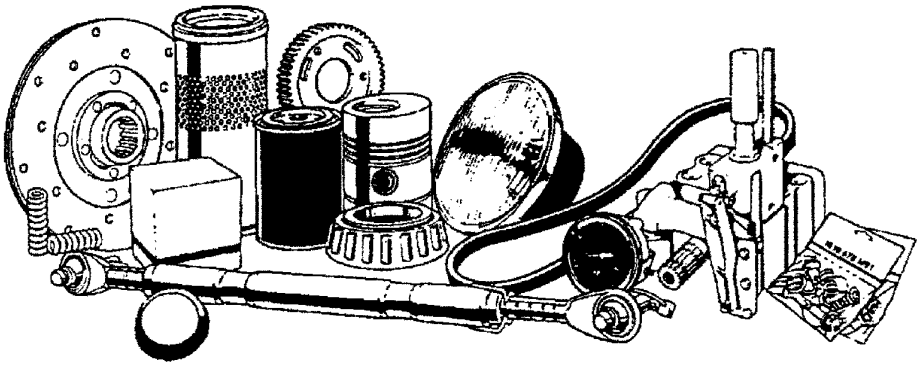

133611.TIF

Copyright © 2007 AGCO Corporation

KIT-LIGHTBAR,RGL600T

ITEM	PART #	QTY	DESCRIPTION	COMMENTS
REF	AG610788	AR	BOX-BUTTON,LIGHTBAR	
REF	AG610792	AR	MANUAL-LIGHTBAR,RGL 600	
REF	AG133612	AR	LIGHTBAR-RGL600T	
REF	AG610787	AR	CABLE-LIGHTBAR,28 FT	

Copyright © 2007 AGCO Corporation

TANK ASM,SPRAY 16-1

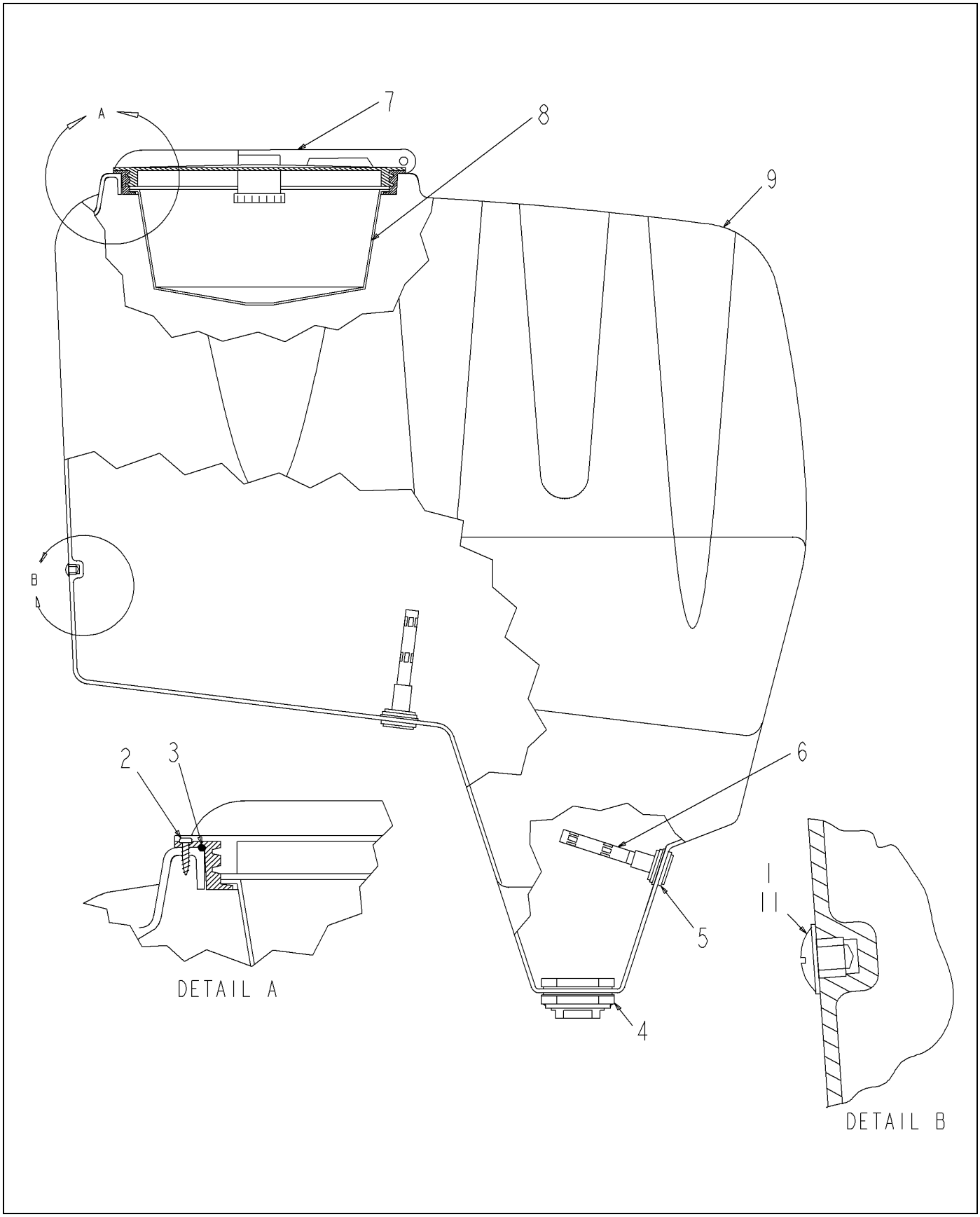

518574D1-02-R406-.TIF

Copyright © 2007 AGCO Corporation

TANK ASM,SPRAY

ITEM	PART #	QTY	DESCRIPTION	COMMENTS
1	WR10416	1	WASHER-FLAT, 3/8 ID SS	
2	6804681	8	SCREW-STAINLESS	
3	6672485	1	GASKET-RIM,400 GALLON	
4	6670290	1	FITTING-TANK,2 IN	
5	6512905	2	INSERT ASSY-SQ END	SEE PAGE 19-14
6	6620467	2	AGITATOR-A&M	SEE PAGE 19-15
7	6672457	1	COVER-HINGED	
8	6670277	1	SCREEN-TANK,SPRAY	
9	518573D1	1	TANK,SPRAY	
11	WR55571	1	SCREW-TRUSS HEAD, SS,	
12	401276X1	2	WASHER-FL,1.25,SS	
13	401277X1	2	GASKET,1.00,EPDM	

Copyright © 2007 AGCO Corporation

BALL VALVE ASM 1 IN 3-WIRE 17-1

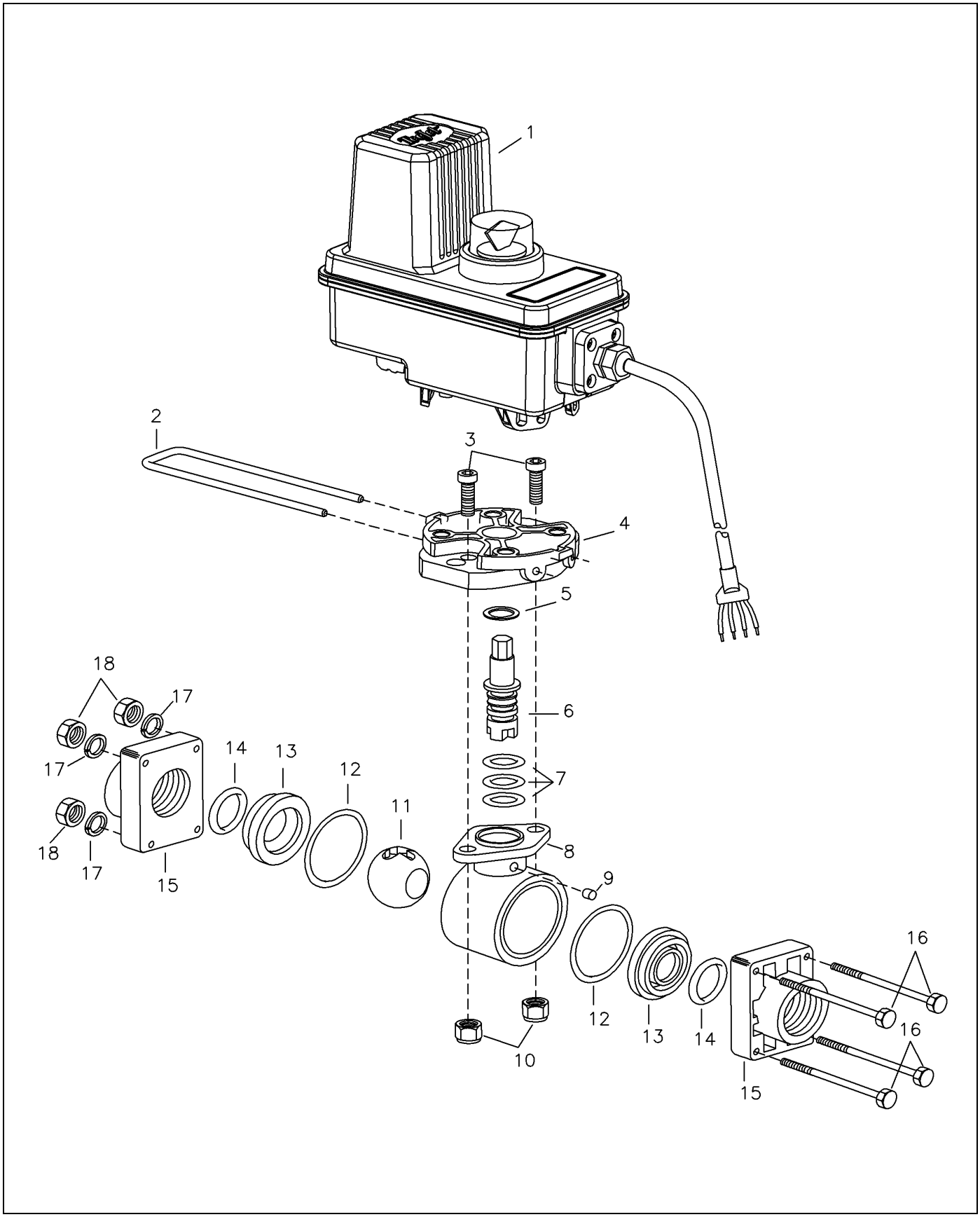

056871-02-M635-.TIF

Copyright © 2007 AGCO Corporation

BALL VALVE ASM 1 IN 3-WIRE

ITEM	PART #	QTY	DESCRIPTION	COMMENTS
REF	AG058307	AR	SPARE PARTS KIT	
1	AG330709	1	MOTOR/25RPM(.6-SEC).5-METR CBL	
2	AG330710	1	CLIP/RETAINING 304 SS	
3	AG330711	2	SCREW/SOCKET HEAD CAP SS	
4	AG330712	1	ADAPTER/POLYPROPYLENE (BLK)	
5	6666553	1	WASHER	
6	AG330713	1	STEM/303SS	
7	AG057325	3	ORING-TEFLON COATED	
8	AG009647	1	BODY CP20101NYB	
9	AG051716	1	DUST PLUG FELT 344E	
10	AG330714	2	LOCKNUT/SS	
11	AG009548	1	BALL	
12	AG057102	2	GASKET	
13	AG050100	2	GASKET TEE	
14	6666558	2	O-RING	
15	AG007463	2	END CAP 1.00 FOR ELEC BALL VLV	
16	6649649	4	NUT	
17	AG054107	4	LOCKWASHER 344ESS	
18	AG050606	4	NUT SS	
	FOOTNOTE		ITEMS 1, 5, 7, 9, 12, 13 AND 14 ARE INCLUDED IN THE PARTS KIT.	

Copyright © 2007 AGCO Corporation

OPT-BOOM 60/80	18-1
BOOM ASM-60/80,LH	18-2
BOOM ASM-60/80,LH	18-3
BOOM ASM-60/80	18-4
CAM ASSY-BREAKAWAY,60/80	18-5
CAM ASM-BOOM BRKWAY	18-6
BOOM ASM-60/80,RH	18-7
BOOM ASM-60/80,RH	18-8
BM INSTL-LFT RACK,H FRM,4X50	18-9
RACK INSTL-TILT,BOOM,60/80	18-10
RACK ASM-TILT,BOOM,60/90	18-11
TUBE ASSY-RACK TILT	18-12
FRAME INSTL-H,REAR,BM,60/80	18-13
FRAME ASM-H,REAR,BM,60/80	18-14
FRAME ASM-H,REAR,BM,60/80	18-15
LIFT INSTL-BOOM,PAR LINK,4X50	18-16
BOOM GRP-RH,60 FT	18-17
BOOM GRP-RH,60 FT	18-18
LINK ASSY-WING FOLD,INNER	18-19
LINK ASSY-WING FOLD,OUTER	18-20
BOOM GRP-LH,60 FT	18-21
BOOM GRP-LH,60 FT	18-22
BOOM GRP-RH,80 FT	18-23
BOOM GRP-RH,80 FT	18-24
BOOM GRP-LH,80 FT	18-25
BOOM GRP-LH,80 FT	18-26
BAR INSTL-MTG,PLMB,CTR,SC6080	18-27
BAG-LOOSE PARTS,60/80	18-28
BLOCK INSTL-BOOM REST,4X50	18-29
BOOMREST INSTL-SC6080,4X50	18-30
BOOMREST INSTL-SC6080,4X50	18-31
KIT-LOOSE PARTS,BOOM HINGE	18-32
BAG-PARTS	18-33
TILT RACK ASSEMBLY	18-34
TILT RACK ASSEMBLY	18-35
BOOM LIFT GROUP	18-36
TUBE ASSY-RACK TILT	18-37
REAR ""H"" FRAME GROUP	18-38
REAR ""H"" FRAME GROUP	18-39
REAR ""H"" FRAME GROUP	18-40
REAR ""H"" FRAME GROUP	18-41
REAR ""H"" FRAME GROUP	18-42

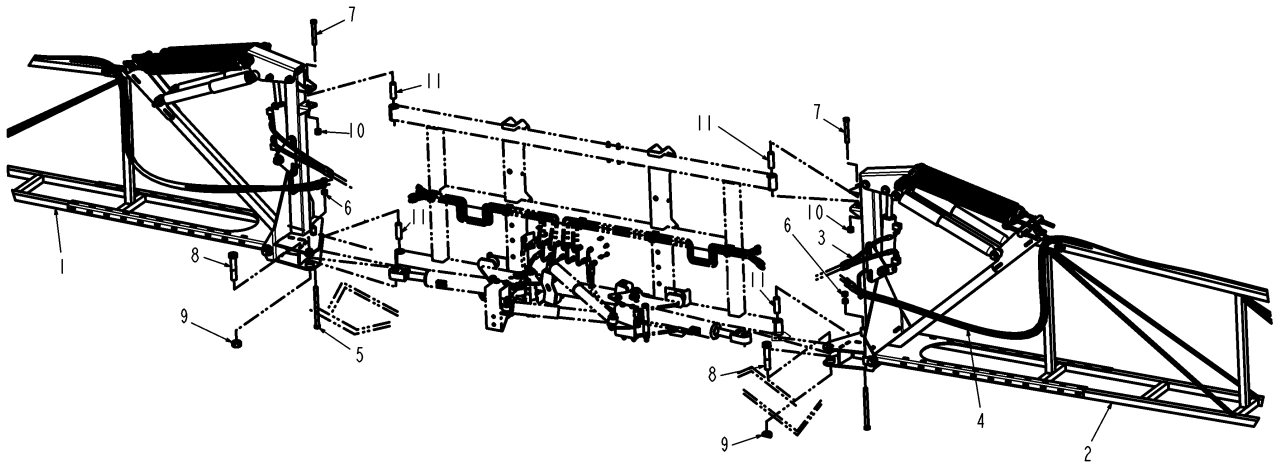

128736-D.TIF

Copyright © 2007 AGCO Corporation

ITEM	PART #	QTY	DESCRIPTION	COMMENTS
1	WR125308	1	BOOM ASM-60/80,LH	SEE PAGE 18-2
2	WR125309	1	BOOM ASM-60/80,RH	SEE PAGE 18-7
3	WR129756	1	HOSE INSTL-BM TILT,SC6080,7X50	SEE PAGE 7-42
4	WR129757	1	HOSE INSTL-BM TIP,SC6080,7X50	SEE PAGE 7-43
5	WR135300	-	SLEEVE	
6	AG555118	-	BOLT 0.62-11NCX 4.75 G5 ZN HHD	
7	AG560634	-	BOLT 0.75-10NCX 6.00 G5 ZN HHD	
8	AG561197	-	BOLT 1.00- 8NCX 5.00 G5 ZN HHD	
9	AG561838	-	NUT 1.00- 8NC HEX ZN C-LK	
10	AG601217	-	NUT 0.62-11NC HEX ZN HVY NY	
11	AG603864	-	NUT 0.75-10NC HEX ZN REG NY	
12	6800367	-	SLEEVE	

Copyright © 2007 AGCO Corporation

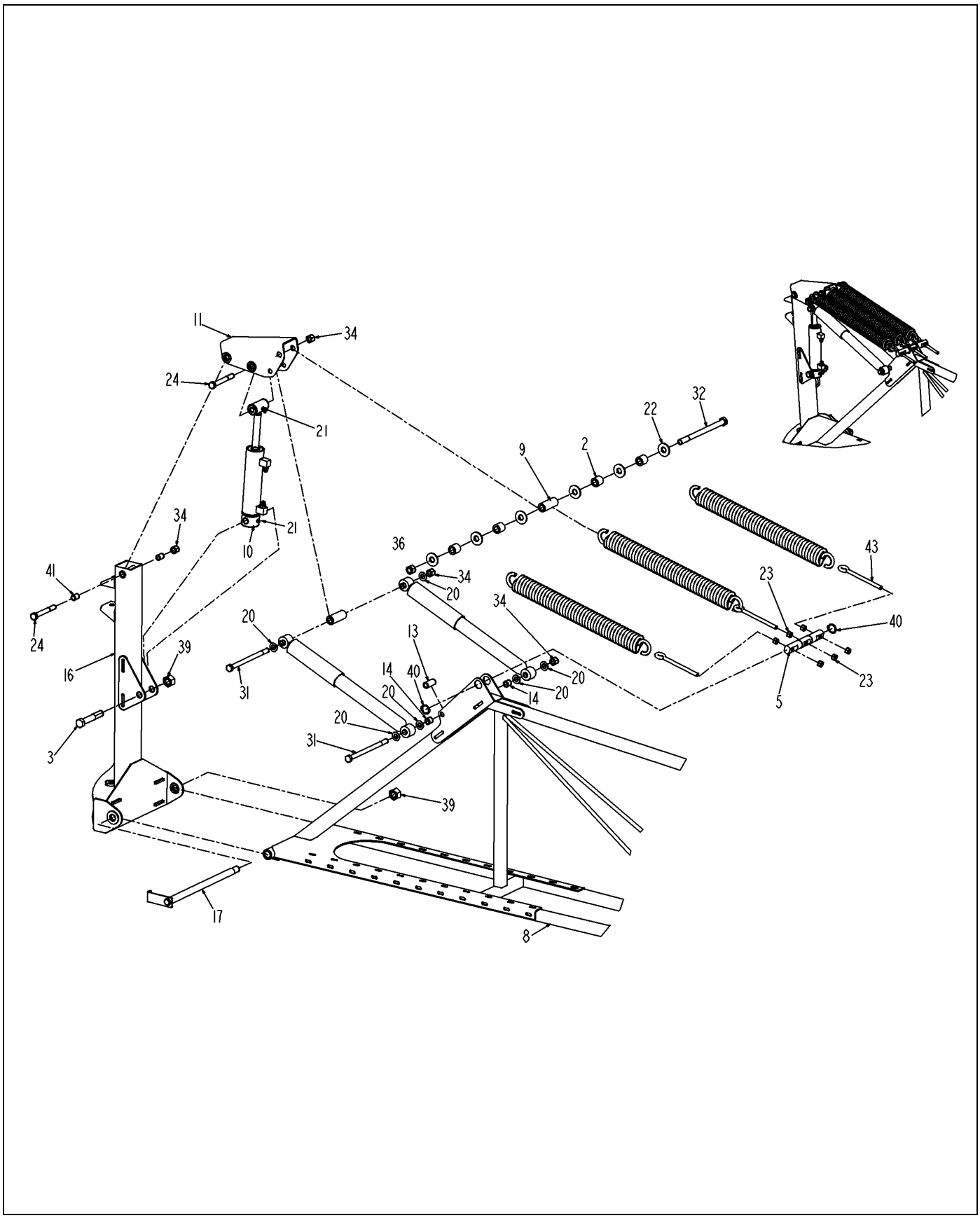

125308-12-N183-01.TIF

Copyright © 2007 AGCO Corporation

ITEM	PART #	QTY	DESCRIPTION	COMMENTS
2	WR17220	4	TUBE-RM, 1.31 OD X.250W X	
3	AG029090	-	BOLT 0.87- 9NCX 5.00 G5 ZN HHD	
4	WR122553	3	SPRING-BOOM (REPLACES WR55982)	
5	WR124425	1	PIN-BOOM SUSPENSION,3 SPRING	
8	WR125307	1	BOOM ASM-60/80	SEE PAGE 18-4
9	WR125311	2	BUSHING-1.31OD X.813ID X2.25	
10	WR128010	1	CYLINDER-HYD,2.25 X 1.00 X 6.5	[A] SEE PAGE 7-7
11	WR128544	1	BRKT-WLDMT,BOOM LIFT	
13	WR129195	1	BUSHING,.87 OD X.109 WL	
14	WR132455	2	BUSHING-.87 OD X .65 ID X.77LG	
16	WR136185	1	WLDMT-BOOM SWING,LH	
17	WR136192	1	WLDMT-PIN,BOOM SWING	
18	AG235991	1	CYLINDER ASM- BOOM TIP FOLD	SEE PAGE 7-3
19	AG511099	AR	GREASE-MULTI PURPOSE LITH.	
20	AG515180	6	WASHER 0.62 FL ZN SAE TYP-A G8	
21	AG518500	3	BOLT 0.37-16NCX 1.00 G8 ZN HHD	
22	AG550116	6	WASHER 0.75 FL ZN REG TYPE-B	
23	AG550124	6	NUT 0.50-13NC HEX ZN REG	
24	AG550248	1	BOLT 0.62-11NCX 5.00 G8 ZN HHD	
31	AG561822	2	BOLT 0.62-11NCX 9.50 G5 ZN HHD	
32	AG561825	1	BOLT 0.75-10NCX11.00 G5 ZN HHD	
34	AG601217	4	NUT 0.62-11NC HEX ZN HVY NY	
36	AG603864	5	NUT 0.75-10NC HEX ZN REG NY	
39	AG606259	1	NUT 0.87-09NC HEX ZN HVY NY	
40	6538287	2	RING-SNAP	
41	6613050	2	BUSHING-OILITE	
42	6623263	1	SHOCK ABSORBER-BOOM	
43	6626401	3	BOLT-EYE	
44	6664598	2	SHOCK-DAMPER	
	FOOTNOTE [A]		ITEMS 9 - 17 CANNOT BE PURCHASED INDIVIDUALLY BIT ARE INCLUDED IN THE SEAL KIT.	
	FOOTNOTE [A]		ITEM 1 CANNOT BE PURCHASED INDIVIDUALLY BUT IS INCLUDED WITH THE CYLINDER.	

Copyright © 2007 AGCO Corporation

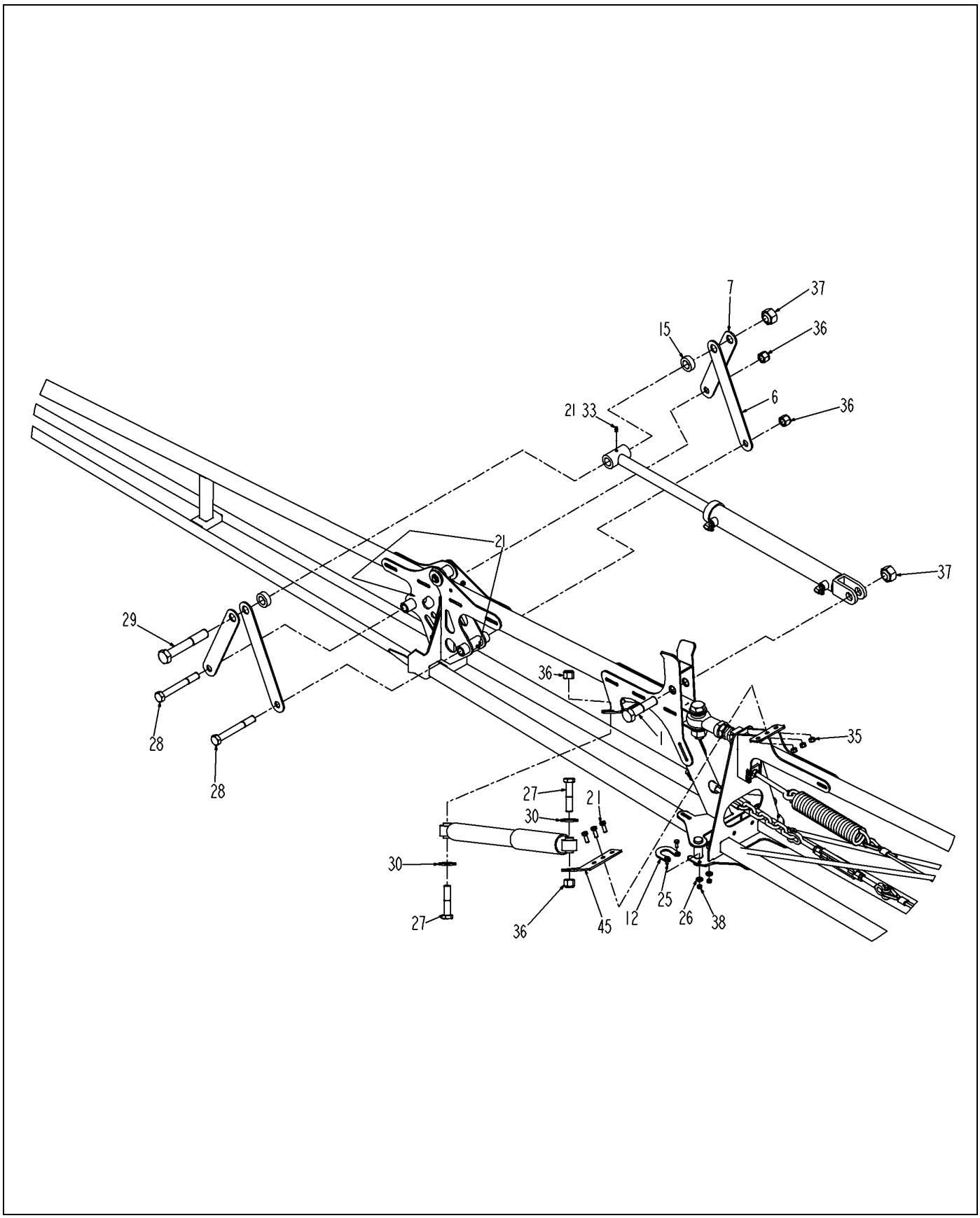

125308-12-N183-02.TIF

Copyright © 2007 AGCO Corporation

BOOM ASM-60/80,LH

ITEM	PART #	QTY	DESCRIPTION	COMMENTS
1	AG010220	1	BOLT 1.00- 8NCX 4.00 G5 PL HHD	
6	WR124426	2	LINK,LONG-BOOM TIP FOLD,60/80	
7	WR124427	2	LINK,SHORT-BOOM TIP FOLD,60/80	
12	WR128835	1	CLAMP-BOOM PIVOT	
15	WR135546	2	SPACER-UHMW, 1.75OD X 1.0ID	
21	AG518500	3	BOLT 0.37-16NCX 1.00 G8 ZN HHD	
25	AG550485	2	BOLT 0.25-20NCX 0.75 G5 ZN HHD	
26	AG550507	2	WASHER 0.25 FL ZN REG TYPE-B	
27	AG550787	2	BOLT 0.75-10NCX 3.50 G5 ZN HHD	
28	AG560634	2	BOLT 0.75-10NCX 6.00 G5 ZN HHD	
29	AG560897	1	BOLT 1.00- 8NCX 6.50 G8 ZN HHD	
30	AG561156	2	WASHER 0.75 FL ZN SAE TYPE-A	
35	AG601411	3	NUT 0.37-16NC HEX ZN REG NY	
36	AG603864	5	NUT 0.75-10NC HEX ZN REG NY	
37	AG604185	2	NUT 1.00-08NC HEX ZN HVY NY	
38	AG604216	2	NUT 0.25-20NC HEX ZN REG NY	
45	503475D1	1	PLATE-SHOCK,MNT	

Copyright © 2007 AGCO Corporation

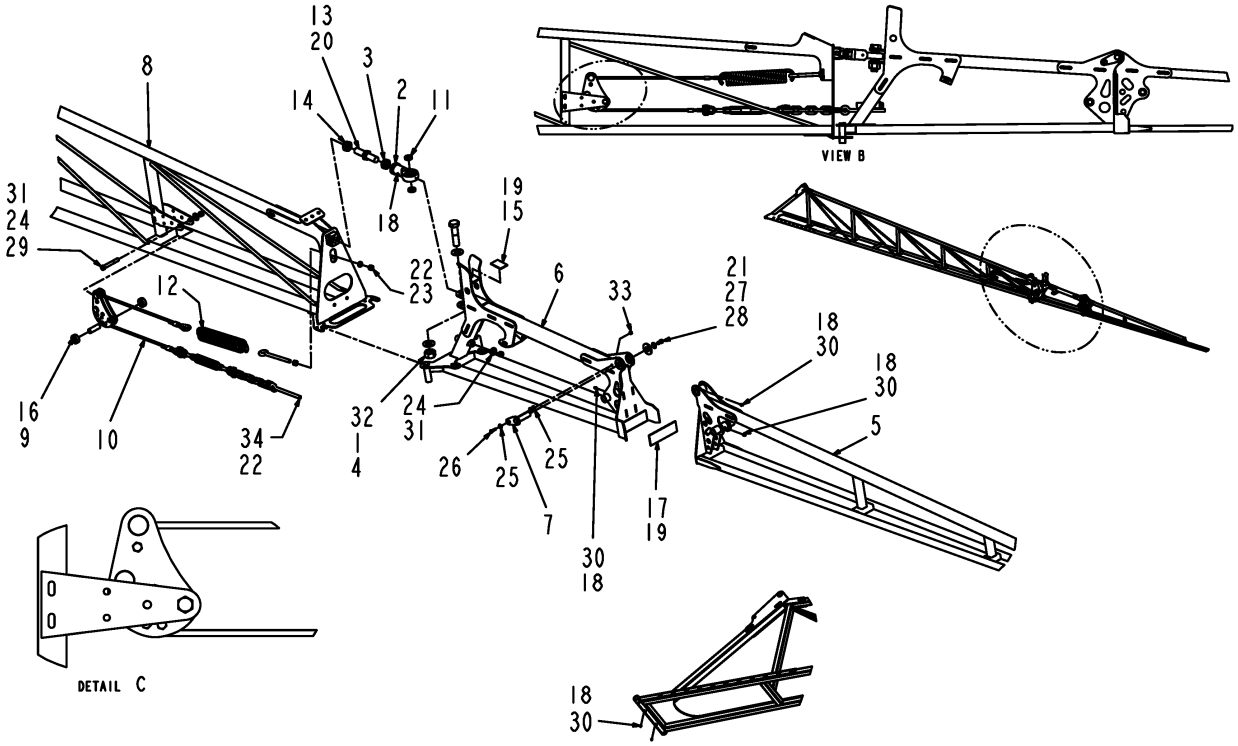

125307-G.TIF

Copyright © 2007 AGCO Corporation

BOOM ASM-60/80

ITEM	PART #	QTY	DESCRIPTION	COMMENTS
1	AG010220	1	BOLT 1.00- 8NCX 4.00 G5 PL HHD	
2	WR34606	1	ROD-END,1-14UNF,FEMALE	
3	WR34609	1	NUT-JAM, 1-14UNF	
4	WR55197	2	WASHER-PLAIN HRD,1 ID GRADE 8	
5	WR124362	1	BOOM WLDMT-TIP,60/80	
6	WR124408	1	BOOM WLDMT-BREAKAWAY,60/80	
7	WR124422	1	PIN WLDMT-PIVOT,BOOM TIP	
8	WR124500	1	BOOM WLDMT-BASE,60/80	
9	WR124539	1	BUSHING-1.5 LONGX.750DX.51D	
10	WR125306	1	CAM ASSY-BREAKAWAY,60/80	SEE PAGE 18-5
11	WR125615	2	BUSHING-1.25OD X 1.00ID X.265	
12	WR126491	1	SPRING-EXTENSION	
13	AG129192	1	BOLT-ADJUST,1-14RH,1-14LH	
14	AG129193	1	NUT-JAM,1-14 UNF,LH	
15	WR130544	1	PAD RUBBER 1.63 X 2.50 X .12	
16	WR135545	2	SPACER-UHMW,1.5OD X .78ID	
17	AG260590	1	PAD-RUBBER,BM TIP,.12THK	
18	AG511099	AR	GREASE-MULTI PURPOSE LITH.	
19	AG512346	AR	3M 1300 YELLOW ADHESIVE (GAL)	
20	AG516064	AR	ANTI SEIZE	
21	AG550116	1	WASHER 0.75 FL ZN REG TYPE-B	
22	AG550124	2	NUT 0.50-13NC HEX ZN REG	
23	AG550264	1	WASHER 0.50 LK ZN REG	
24	AG550353	2	WASHER 0.50 FL ZN REG TYPE-B	
25	AG550507	3	WASHER 0.25 FL ZN REG TYPE-B	
26	AG550698	1	BOLT 0.25-20NCX 1.00 G5 ZN HHD	
27	AG551007	1	WASHER 0.37 FL ZN REG TYPE-B	
28	AG551503	1	BOLT 0.37-16NCX 0.75 G5 ZN HHD	
29	AG556149	1	BOLT 0.50-13NCX 3.50 G5 ZN HHD	
30	AG561892	5	FITTING LUBE STR 0.25UNF	
31	AG601152	2	NUT 0.50-13NC HEX ZN REG NY	
32	AG604185	1	NUT 1.00-08NC HEX ZN HVY NY	
33	AG604216	1	NUT 0.25-20NC HEX ZN REG NY	
34	6626401	1	BOLT-EYE	

Copyright © 2007 AGCO Corporation

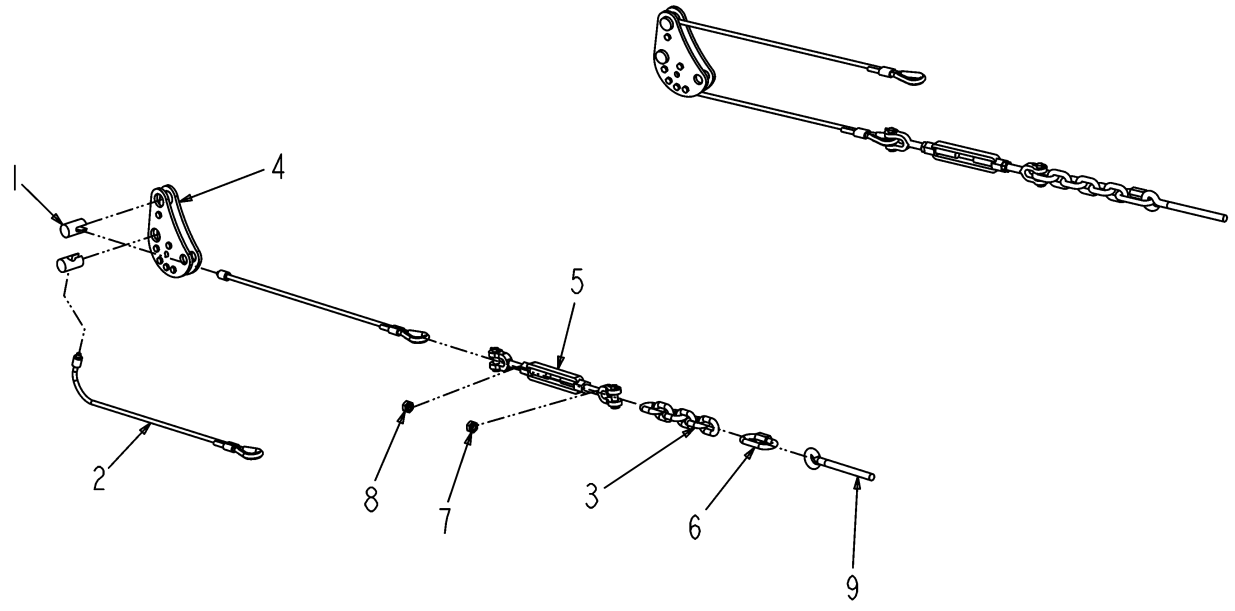

125306-D-1.TIF

Copyright © 2007 AGCO Corporation

CAM ASSY-BREAKAWAY,60/80

ITEM	PART #	QTY	DESCRIPTION	COMMENTS
1	WR125301	2	PIN-CABLE STOP	
2	WR125304	2	WIRE ROPE-5/16,BUTTON FITTING	
3	WR125310	1	CHAIN-BOOM BRKWAY	
4	AG128842	1	CAM ASM-BOOM BRKWAY	SEE PAGE 18-6
5	AG128843	1	TURNBUCKLE-JAW,JAW,.5X6	
6	WR129194	1	LINK-CONNECTOR, 3/8	
7	WR129706	1	NUT HEX 1/2-13 UNC LH JAM PL	
9	6626401	1	BOLT-EYE	

Copyright © 2007 AGCO Corporation

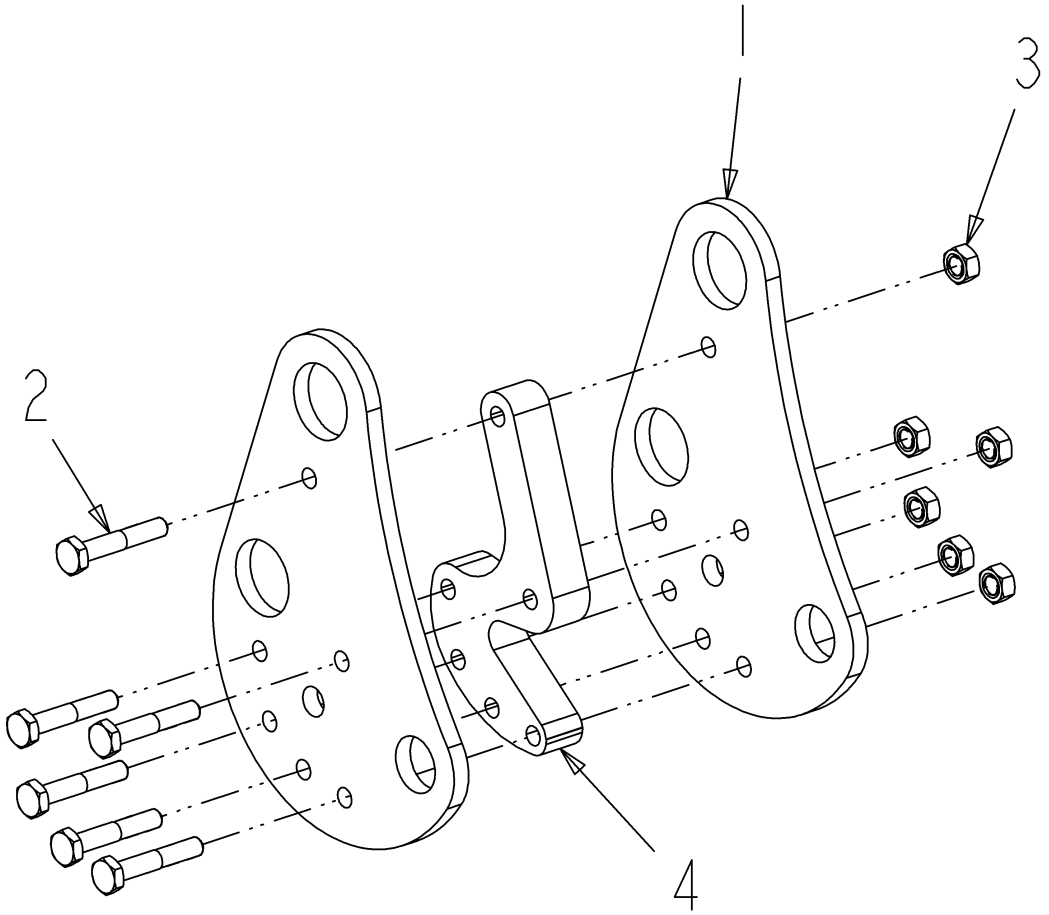

128842-03-M449-.TIF

Copyright © 2007 AGCO Corporation

CAM ASM-BOOM BRKWAY

ITEM	PART #	QTY	DESCRIPTION	COMMENTS
1	WR125305	2	PLATE-CAM WALL	
2	AG550949	6	BOLT 0.25-20NCX 1.50 G5 ZN HHD	
3	AG604216	6	NUT 0.25-20NC HEX ZN REG NY	
4	505516D1	1	SPACER-CAM,UHMW	

Copyright © 2007 AGCO Corporation

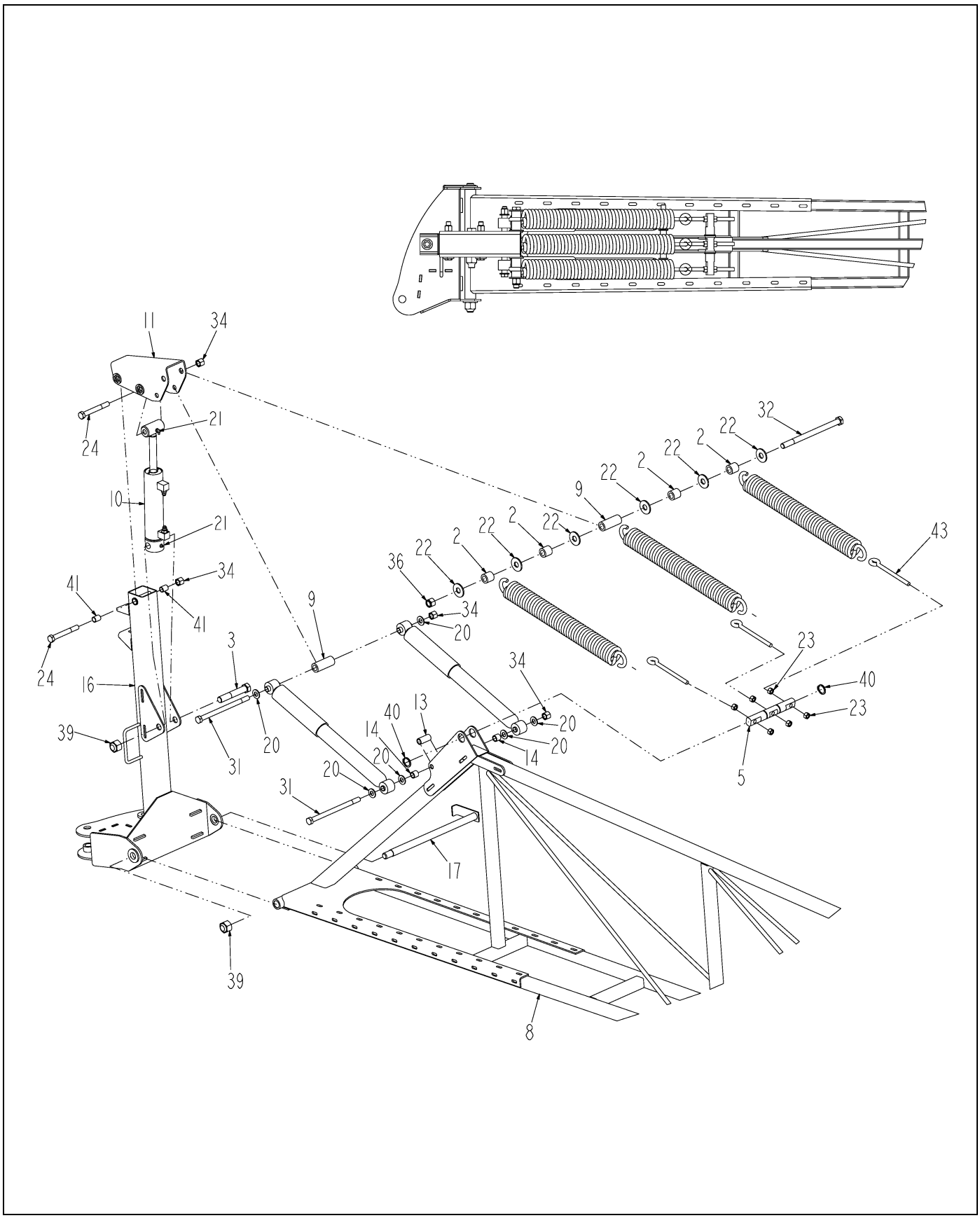

125309-12-N183-01.TIF

Copyright © 2007 AGCO Corporation

ITEM	PART #	QTY	DESCRIPTION	COMMENTS
2	WR17220	4	TUBE-RM, 1.31 OD X.250W X	
3	AG029090	-	BOLT 0.87- 9NCX 5.00 G5 ZN HHD	
4	WR122553	3	SPRING-BOOM (REPLACES WR55982)	
5	WR124425	1	PIN-BOOM SUSPENSION,3 SPRING	
8	WR125307	1	BOOM ASM-60/80	SEE PAGE 18-4
9	WR125311	2	BUSHING-1.31OD X.813ID X2.25	
10	WR128010	1	CYLINDER-HYD,2.25 X 1.00 X 6.5	[A] SEE PAGE 7-7
11	WR128544	1	BRKT-WLDMT,BOOM LIFT	
13	WR129195	1	BUSHING,.87 OD X.109 WL	
14	WR132455	2	BUSHING-.87 OD X .65 ID X.77LG	
16	AG136186	1	WLDMT-BOOM SWING,RH	
17	WR136192	1	WLDMT-PIN,BOOM SWING	
19	AG511099	AR	GREASE-MULTI PURPOSE LITH.	
20	AG515180	6	WASHER 0.62 FL ZN SAE TYP-A G8	
21	AG518500	3	BOLT 0.37-16NCX 1.00 G8 ZN HHD	
22	AG550116	6	WASHER 0.75 FL ZN REG TYPE-B	
23	AG550124	6	NUT 0.50-13NC HEX ZN REG	
24	AG550248	1	BOLT 0.62-11NCX 5.00 G8 ZN HHD	
31	AG561822	2	BOLT 0.62-11NCX 9.50 G5 ZN HHD	
32	AG561825	1	BOLT 0.75-10NCX11.00 G5 ZN HHD	
34	AG601217	4	NUT 0.62-11NC HEX ZN HVY NY	
36	AG603864	5	NUT 0.75-10NC HEX ZN REG NY	
39	AG606259	1	NUT 0.87-09NC HEX ZN HVY NY	
40	6538287	2	RING-SNAP	
41	6613050	2	BUSHING-OILITE	
43	6626401	3	BOLT-EYE	
44	6664598	1	SHOCK-DAMPER	
	FOOTNOTE [A]		ITEMS 9 - 17 CANNOT BE PURCHASED INDIVIDUALLY BIT ARE INCLUDED IN THE SEAL KIT.	
	FOOTNOTE [A]		ITEM 1 CANNOT BE PURCHASED INDIVIDUALLY BUT IS INCLUDED WITH THE CYLINDER.	

Copyright © 2007 AGCO Corporation

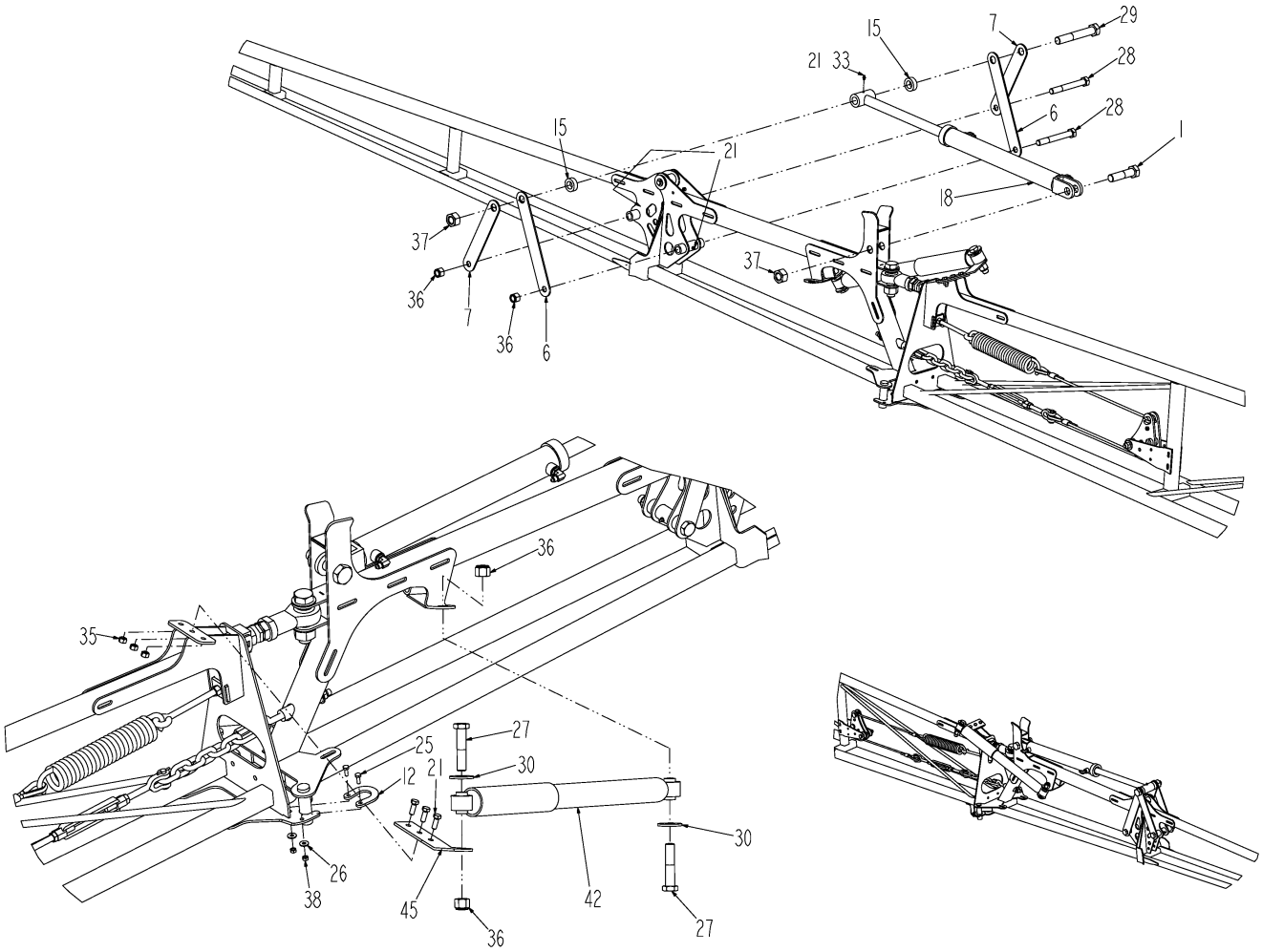

125309-12-N183-02.TIF

Copyright © 2007 AGCO Corporation

BOOM ASM-60/80,RH

ITEM	PART #	QTY	DESCRIPTION	COMMENTS
1	AG010220	1	BOLT 1.00- 8NCX 4.00 G5 PL HHD	
6	WR124426	2	LINK,LONG-BOOM TIP FOLD,60/80	
7	WR124427	2	LINK,SHORT-BOOM TIP FOLD,60/80	
12	WR128835	1	CLAMP-BOOM PIVOT	
15	WR135546	2	SPACER-UHMW, 1.75OD X 1.0ID	
18	AG235991	1	CYLINDER ASM- BOOM TIP FOLD	SEE PAGE 7-3
21	AG518500	3	BOLT 0.37-16NCX 1.00 G8 ZN HHD	
25	AG550485	2	BOLT 0.25-20NCX 0.75 G5 ZN HHD	
26	AG550507	2	WASHER 0.25 FL ZN REG TYPE-B	
27	AG550787	2	BOLT 0.75-10NCX 3.50 G5 ZN HHD	
28	AG560634	2	BOLT 0.75-10NCX 6.00 G5 ZN HHD	
29	AG560897	1	BOLT 1.00- 8NCX 6.50 G8 ZN HHD	
30	AG561156	2	WASHER 0.75 FL ZN SAE TYPE-A	
33	AG561892	1	FITTING LUBE STR 0.25UNF	
35	AG601411	3	NUT 0.37-16NC HEX ZN REG NY	
36	AG603864	5	NUT 0.75-10NC HEX ZN REG NY	
37	AG604185	2	NUT 1.00-08NC HEX ZN HVY NY	
38	AG604216	2	NUT 0.25-20NC HEX ZN REG NY	
42	6623263	1	SHOCK ABSORBER-BOOM	
45	503475D1	1	PLATE-SHOCK,MNT	

Copyright © 2007 AGCO Corporation

Please refer to the Bill Of Material on the opposite page for related Installations, Assemblies, or Parts

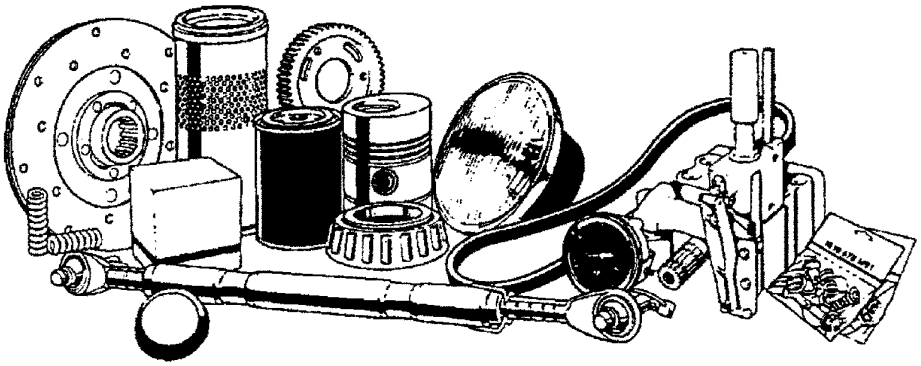

133619.TIF

Copyright © 2007 AGCO Corporation

BM INSTL-LFT RACK,H FRM,4X50

ITEM	PART #	QTY	DESCRIPTION	COMMENTS
1	AG120735	5	BOARD-1X6X46, GRADE 4	
2	AG125370	8	BOARD-2X2X6,GRADE 4	
3	WR128733	1	RACK INSTL-TILT,BOOM,60/80	SEE PAGE 18-10
4	WR128734	1	FRAME INSTL-H,REAR,BM,60/80	SEE PAGE 18-13
5	AG133620	1	HYD INSTL-H FRAME,SC6080,4X50	
6	AG133625	1	HOSE INSTL-HYD,BM LFT,4X50	SEE PAGE 7-44
7	AG133801	1	BAR INSTL-MTG,PLMB,CTR,SC6080	SEE PAGE 18-27
8	AG133805	1	LIFT INSTL-BOOM,PAR LINK,4X50	SEE PAGE 18-16
9	AG134340	1	BAG-LOOSE PARTS,60/80	SEE PAGE 18-28
10	6803767	1	PALLET-BOOM	
11	508964D1	1	BLOCK INSTL-BOOM REST,4X50	SEE PAGE 18-29

Copyright © 2007 AGCO Corporation

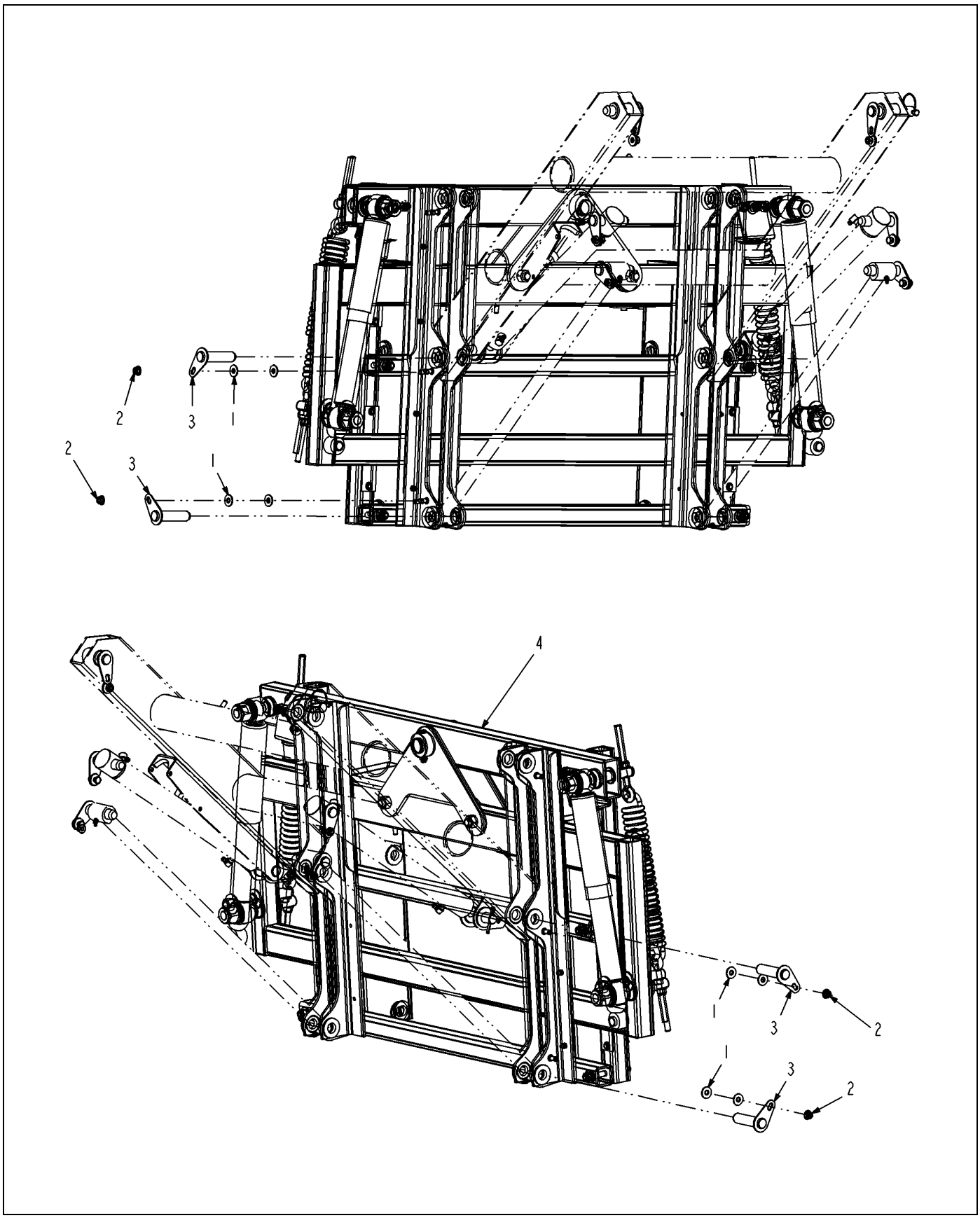

128733-03-R130-.TIF

Copyright © 2007 AGCO Corporation

RACK INSTL-TILT,BOOM,60/80

ITEM	PART #	QTY	DESCRIPTION	COMMENTS
1	WR55158	8	WASHER-FLAT,10MM ID,	
2	WR55301	4	NUT-FLANGE,M10 X 1.5,PREV	
3	6618836	4	PIN-W/A	
4	518408D1	1	RACK ASM-TILT,BOOM,60/90	SEE PAGE 18-11

Copyright © 2007 AGCO Corporation

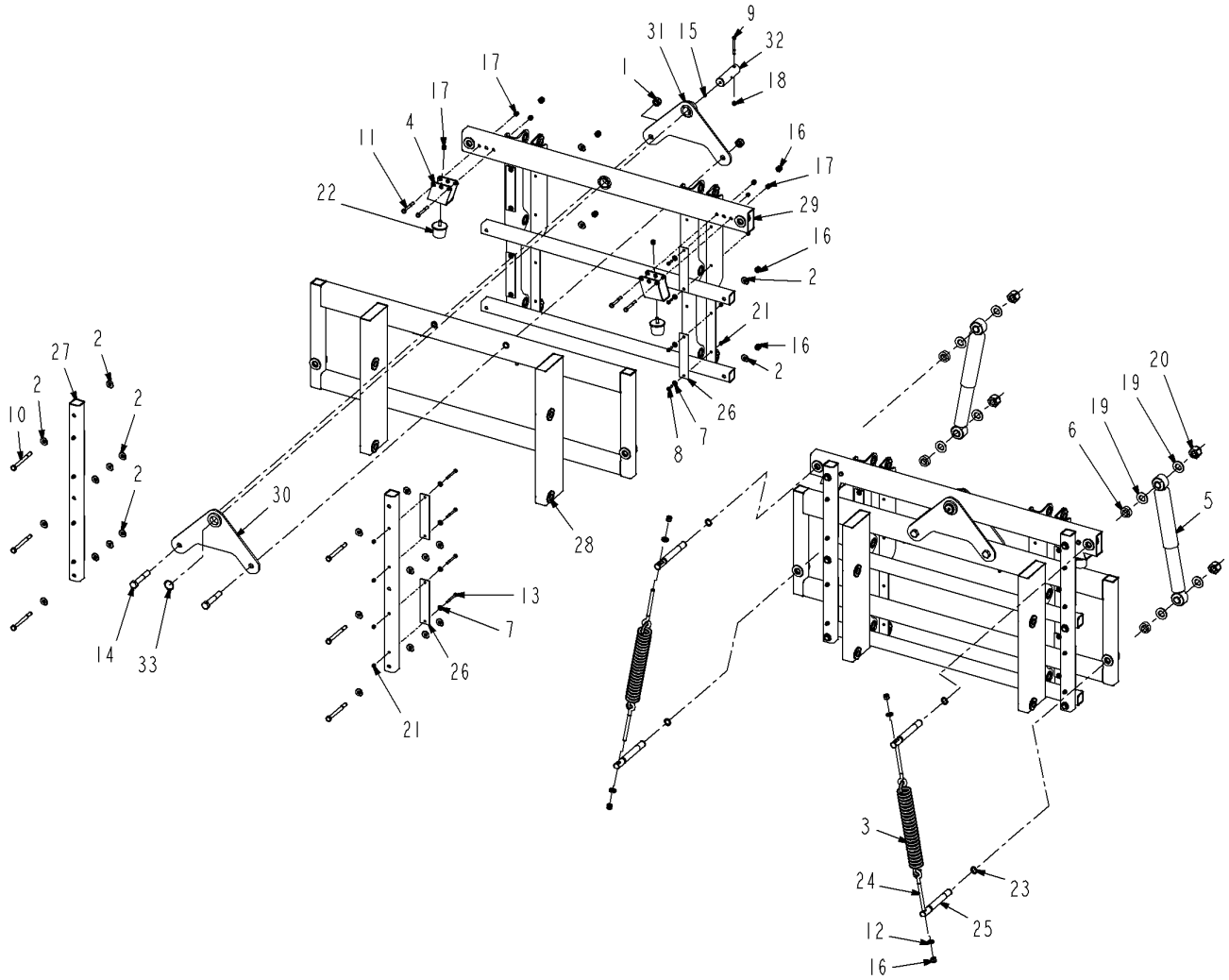

518408D1-02-R547-.TIF

Copyright © 2007 AGCO Corporation

RACK ASM-TILT,BOOM,60/90

ITEM	PART #	QTY	DESCRIPTION	COMMENTS
1	WR11543	2	NUT-TOPLOCK, 3/4-10UNC G5	
2	WR31555	24	WASHER-FLAT,STD, 1/2 ID,	
3	WR126491	2	SPRING-EXTENSION	
4	WR128212	2	BRACKET-TILT STOP,60/80	
5	WR132313	2	SHOCK ABSORBER	
6	WR135546	4	SPACER-UHMW, 1.75OD X 1.0ID	
7	AG550507	16	WASHER 0.25 FL ZN REG TYPE-B	
8	AG550698	8	BOLT 0.25-20NCX 1.00 G5 ZN HHD	
9	AG550906	1	BOLT 0.31-18NCX 3.00 G5 ZN HHD	
10	AG554294	6	BOLT 0.50-13NCX 5.50 G5 ZN HHD	
11	AG561072	4	BOLT 0.37-16NCX 3.00 G5 ZN HHD	
12	AG561617	4	WASHER 0.50 FL ZN SAE TYPE-A	
13	AG561770	8	BOLT 0.25-20NCX 2.75 G5 ZN HHD	
15	AG561892	1	FITTING LUBE STR 0.25UNF	
16	AG601152	10	NUT 0.50-13NC HEX ZN REG NY	
17	AG601411	6	NUT 0.37-16NC HEX ZN REG NY	
18	AG601888	1	NUT 0.31-18NC HEX ZN REG NY	
19	AG604184	8	WASHER 1.00 FL ZN SAE TYP-A G8	
20	AG604185	4	NUT 1.00-08NC HEX ZN HVY NY	
21	AG604216	16	NUT 0.25-20NC HEX ZN REG NY	
22	6530360	2	BUMPER-RUBBER	
23	6538286	4	RING-SNAP	
24	6626401	4	BOLT-EYE	
25	505295D1	4	PIN-SPRING,SHOCK,1.0 OD	
26	517519D1	8	SLIDE-PIVOT,UHMW	
27	518409D1	2	TUBE-SQ,2.00,TILT RACK	
28	518410D1	1	WLDMT-BOOM PIVOTING RACK	
29	518411D1	1	WLDMT-BOOM RACK TILT	
30	WR37439	1	PIVOT WLDMT-BACK SIDE	
31	WR37440	1	PIVOT WLDMT-FRONT SIDE	
32	WR37452	1	PIN-PIVOT BRACKET	
33	WR37548	1	RING-SNAP,1.50 NOM	

Copyright © 2007 AGCO Corporation

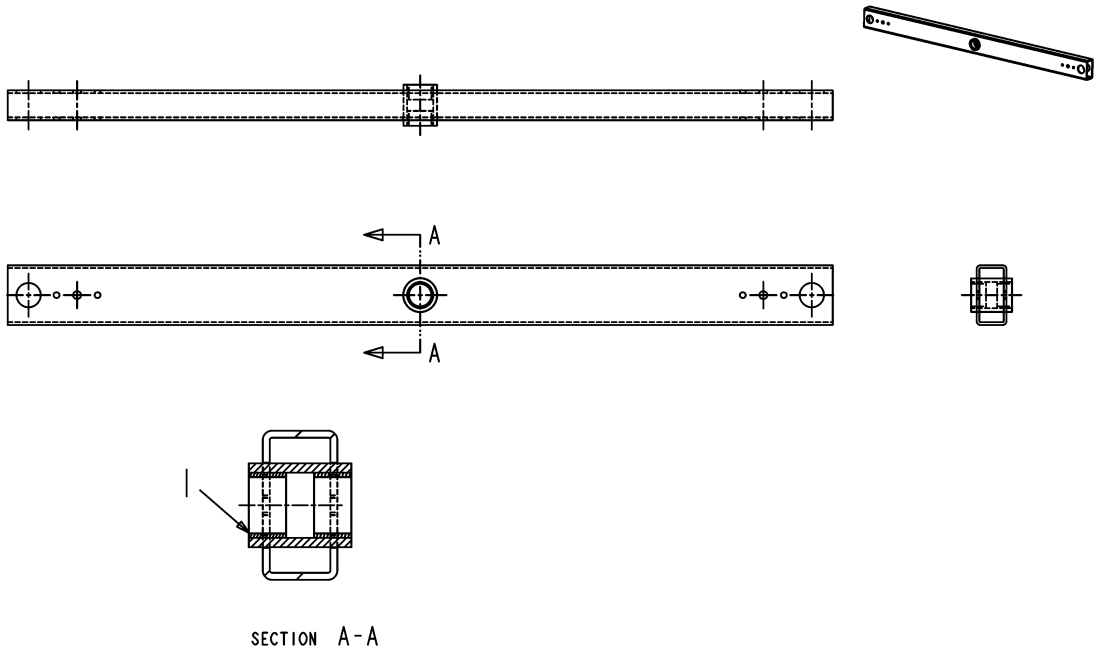

125096-A-1.TIF

Copyright © 2007 AGCO Corporation

TUBE ASSY-RACK TILT

ITEM	PART #	QTY	DESCRIPTION	COMMENTS
1	WR16058	2	BUSHING-BRZ,1.753X1.503ID	
2	WR125097	1	TUBE WLDMT-RACK TILT	

Copyright © 2007 AGCO Corporation

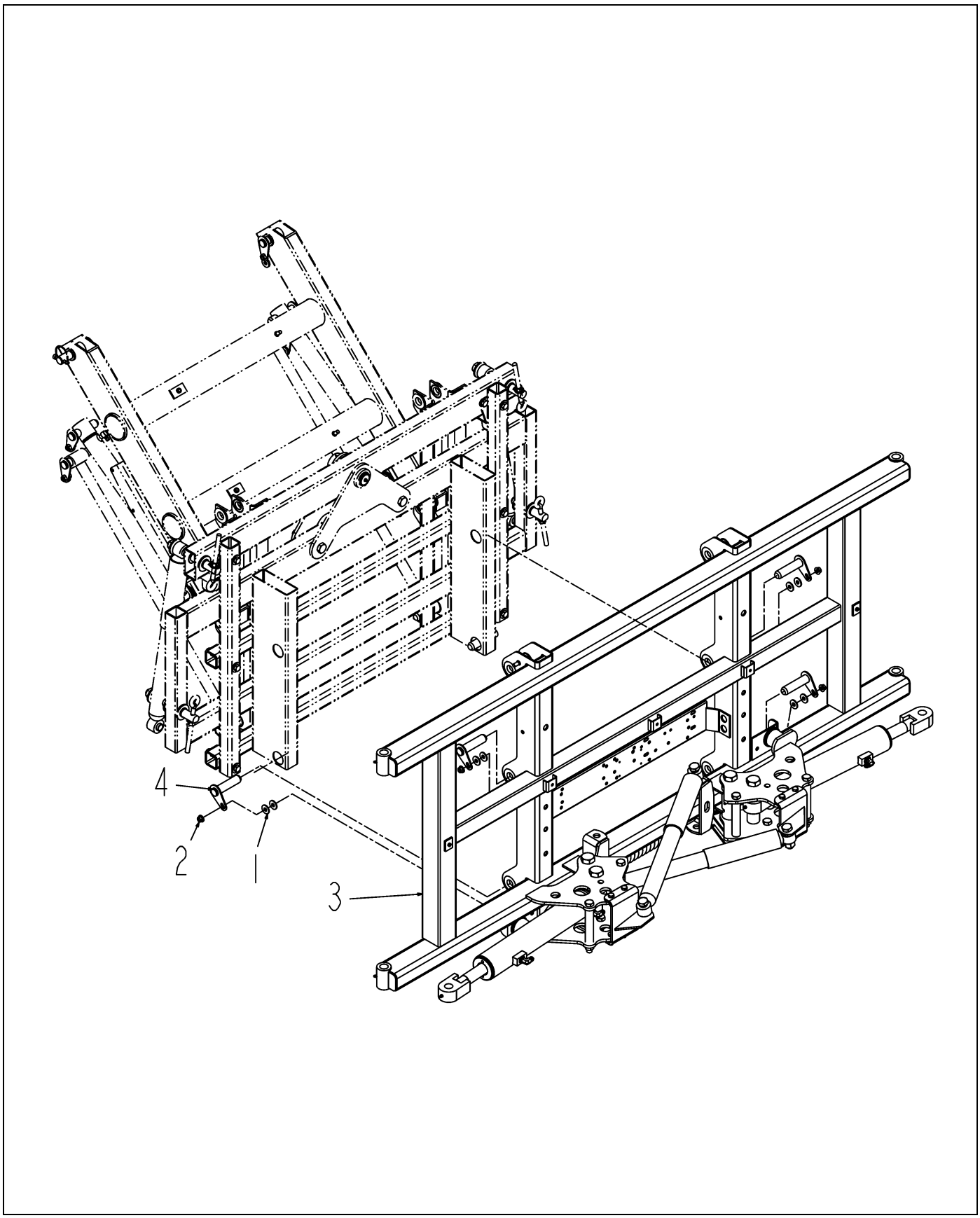

128734-C-1.TIF

Copyright © 2007 AGCO Corporation

FRAME INSTL-H,REAR,BM,60/80

ITEM	PART #	QTY	DESCRIPTION	COMMENTS
1	WR55158	8	WASHER-FLAT,10MM ID,	
2	WR55301	4	NUT-FLANGE,M10 X 1.5,PREV	
3	WR128732	1	FRAME ASM-H,REAR,BM,60/80	SEE PAGE 18-14
4	6618836	4	PIN-W/A	

Copyright © 2007 AGCO Corporation

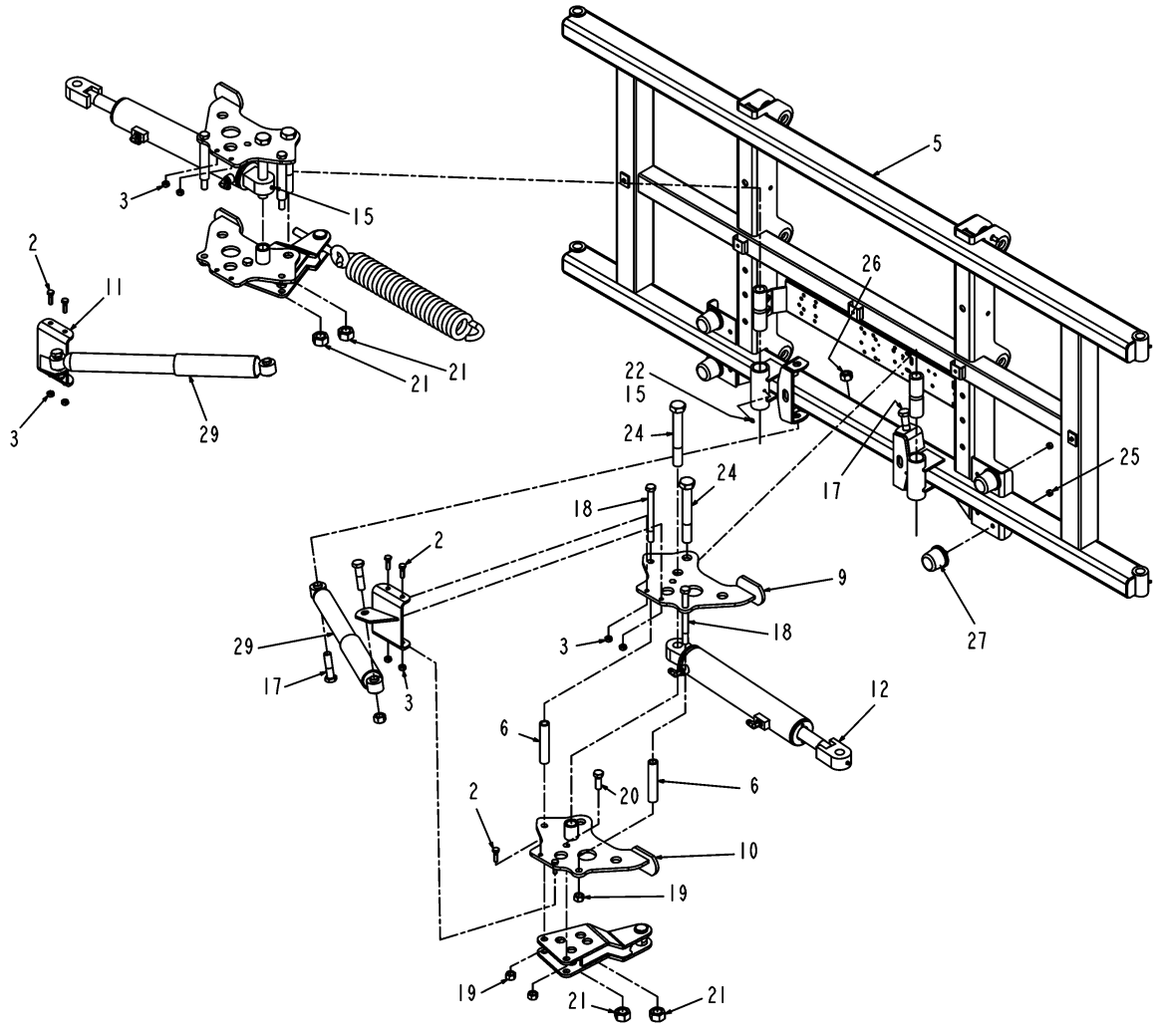

128732-G-M069-01.TIF

Copyright © 2007 AGCO Corporation

FRAME ASM-H,REAR,BM,60/80

ITEM	PART #	QTY	DESCRIPTION	COMMENTS
2	AG029298	8	BOLT M10-1.50X 35MM G8.8 ZN HH	
3	WR55272	8	NUT-LOCK,M10 X 1.5,PREV	
5	WR127899	1	BOOM CENTER FRAME,W/A	
6	WR127961	4	BUSHING-1.00 X .18 WL	
9	WR127997	2	PIVOT WLDMT-BOOM CUSHION	
10	WR127998	2	PIVOT WLDMT-BOOM CUSHION	
11	WR127999	2	BRACKET-SHOCK MOUNT	
12	WR128811	2	CYL ASM-HYD,BM SWING, SC6080	SEE PAGE 7-1
15	AG511099	AR	GREASE-MULTI PURPOSE LITH.	
17	AG553689	4	BOLT 0.75-10NCX 3.00 G5 ZN HHD	
18	AG553751	4	BOLT 0.62-11NCX 7.00 G5 ZN HHD	
19	AG557692	4	NUT 0.62-11NC HEX ZN C-LK	
20	AG561305	2	BOLT 0.62-11NCX 1.75 G5 ZN HHD	
21	AG561838	4	NUT 1.00- 8NC HEX ZN C-LK	
22	AG561892	2	FITTING LUBE STR 0.25UNF	
24	AG562584	4	BOLT 1.00- 8NCX 7.50 G8 ZN HHD	
25	AG601411	4	NUT 0.37-16NC HEX ZN REG NY	
26	AG603864	4	NUT 0.75-10NC HEX ZN REG NY	
27	6530360	4	BUMPER-RUBBER	
29	6623263	2	SHOCK ABSORBER-BOOM	

Copyright © 2007 AGCO Corporation

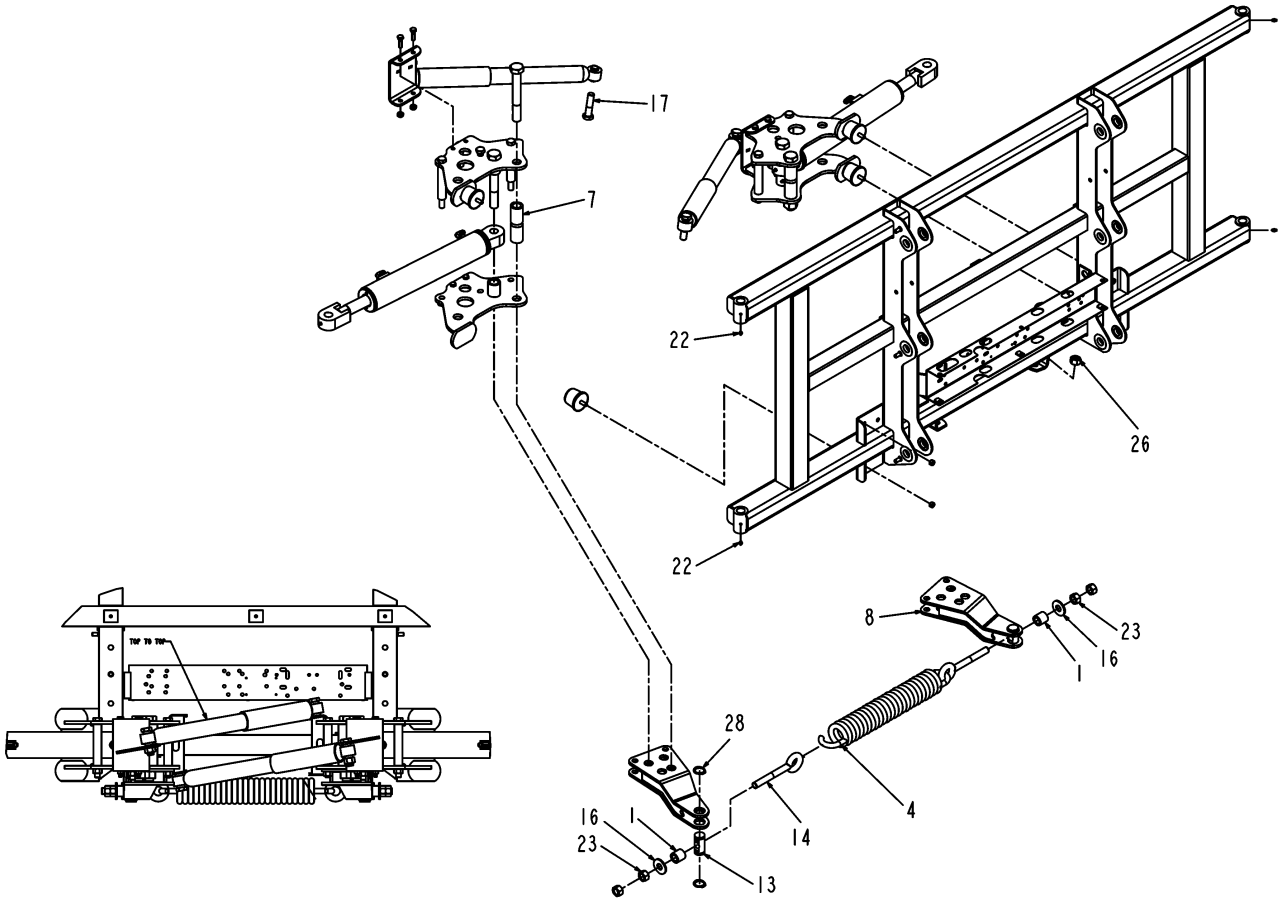

128732-G-M069-02.TIF

Copyright © 2007 AGCO Corporation

FRAME ASM-H,REAR,BM,60/80

ITEM	PART #	QTY	DESCRIPTION	COMMENTS
1	WR17220	2	TUBE-RM, 1.31 OD X.250W X	
4	WR127887	1	SPRING-EXTENSION	
7	WR127963	2	SLEEVE-1.50 OD X .25 WL	
8	WR127966	2	WLDMT-SPRING LEVER	
13	WR133604	2	PIN-EYE BOLT	
14	AG200573	2	BOLT EYE .75NCX6.0 SHK DF GALV	
16	AG550116	2	WASHER 0.75 FL ZN REG TYPE-B	
17	AG553689	4	BOLT 0.75-10NCX 3.00 G5 ZN HHD	
22	AG561892	2	FITTING LUBE STR 0.25UNF	
23	AG562537	4	NUT 0.75-10NC HEX GALV REG OSZ	
26	AG603864	4	NUT 0.75-10NC HEX ZN REG NY	
28	6538287	4	RING-SNAP	

Copyright © 2007 AGCO Corporation

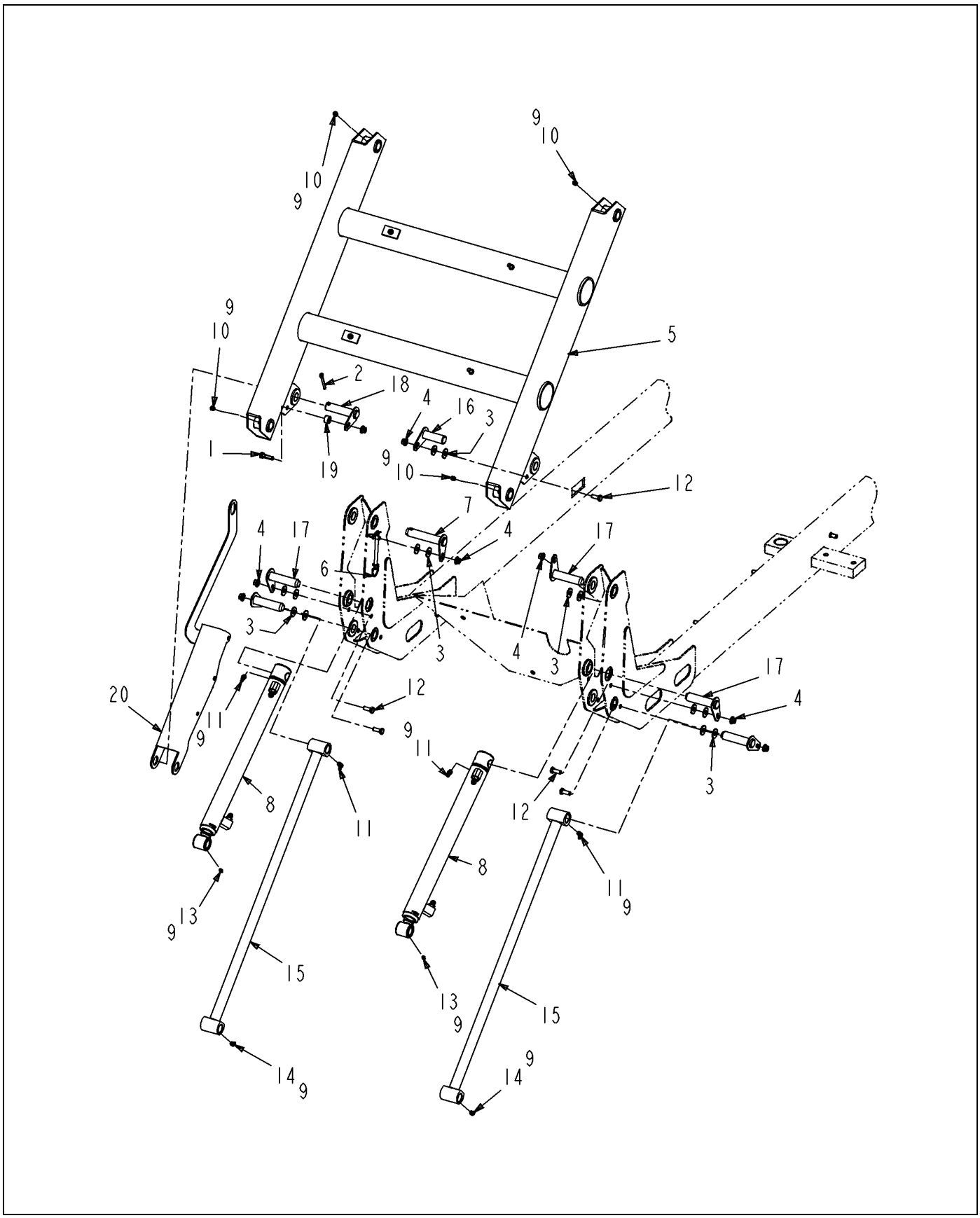

133805-06-R594-.TIF

Copyright © 2007 AGCO Corporation

LIFT INSTL-BOOM,PAR LINK,4X50

ITEM	PART #	QTY	DESCRIPTION	COMMENTS
1	AG029298	1	BOLT M10-1.50X 35MM G8.8 ZN HH	
2	WR35925	1	PIN-COTTER,1/4 X 2.00	
3	WR55158	14	WASHER-FLAT,10MM ID,	
4	WR55301	8	NUT-FLANGE,M10 X 1.5,PREV	
5	WR126504	1	WLDMT-BOOM LIFT	
6	WR129502	1	PIN-HITCH,.38 W/KEY	
7	WR130554	1	PIN, W/A-1.0 OD	
8	WR132565	2	CYL-HYD,1.75X16.84X1.25	SEE PAGE 7-10
9	AG511099	AR	GREASE-MULTI PURPOSE LITH.	
10	AG550280	4	FITTING LUB.12-27NPTFX0.68	
11	AG559083	4	FITTING LUB 90D 0.125 NPTF	
12	AG561683	5	BOLT M10-1.5 X 25MM G8.8 ZN HH	
13	AG561892	2	FITTING LUBE STR 0.25UNF	
14	AG562551	2	ZERK 45D 0.125 NPT	
15	6618833	2	LINK-W/A	
16	6618836	5	PIN-W/A	
18	6626663	1	PIN-W/A	
19	6626810	1	BUSHING	
20	506503D1	1	STAND-SAFETY,BOOM LIFT	

Copyright © 2007 AGCO Corporation

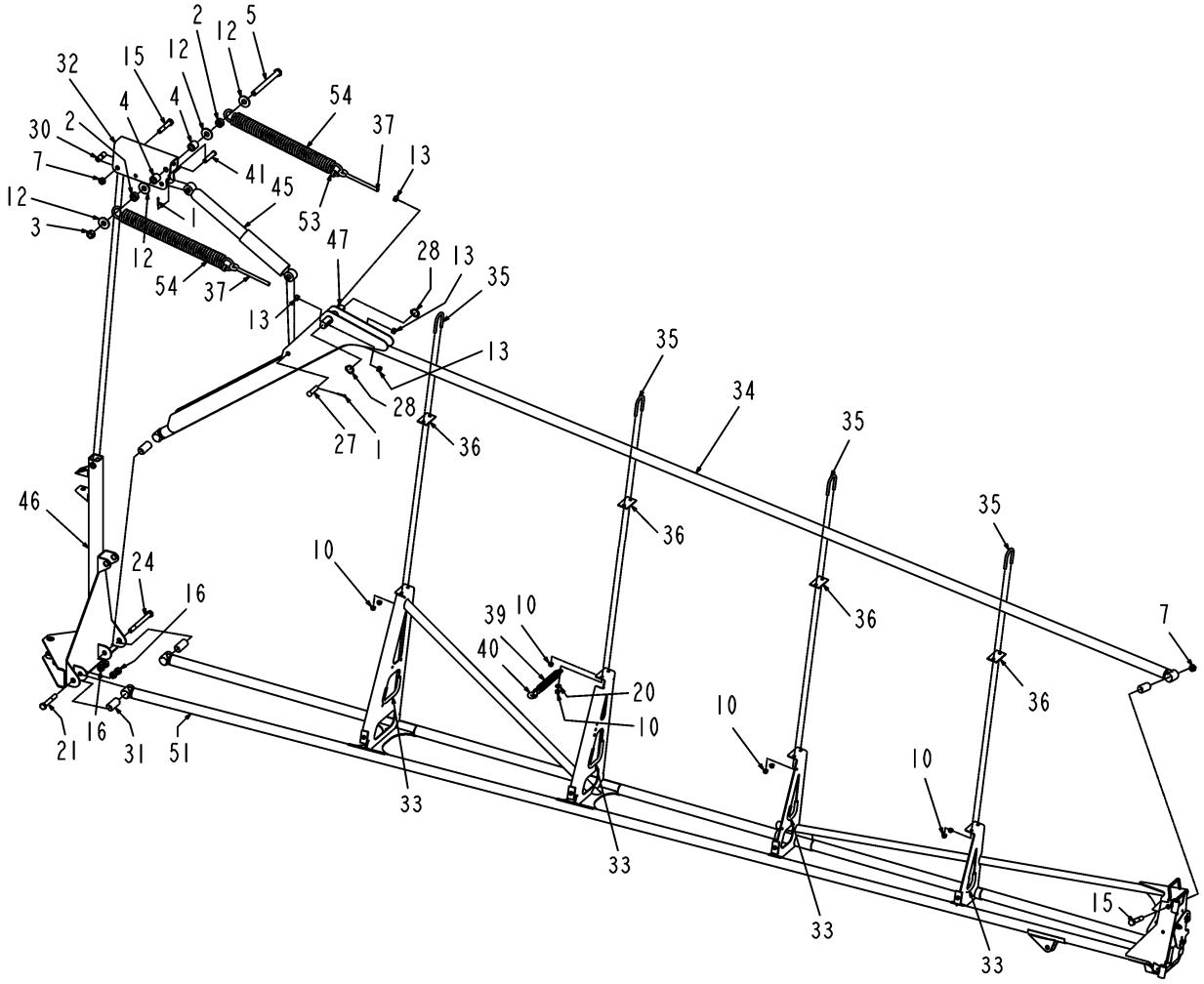

123366-D-M113-01.TIF

Copyright © 2007 AGCO Corporation

BOOM GRP-RH,60 FT

ITEM	PART #	QTY	DESCRIPTION	COMMENTS
1	WR10339	3	PIN-COTTER,1/8 X 1 1/4	
2	WR10896	2	TUBE-RM, 1.31 OD X.250W X	
3	WR11543	1	NUT-TOPLOCK, 3/4-10UNC G5	
4	WR17220	2	TUBE-RM, 1.31 OD X.250W X	
5	WR21845	1	SCREW-CAP HEX 3/4 NC X 8	
7	WR55355	4	NUT-TOPLOCK,5/8-11UNC G8	
10	AG520885	8	NUT-.38-16,G5,ZN,FLG,H	
12	AG550116	4	WASHER 0.75 FL ZN REG TYPE-B	
13	AG550124	4	NUT 0.50-13NC HEX ZN REG	
15	AG550469	2	BOLT 0.62-11NCX 3.50 G5 ZN HHD	
16	AG550477	4	NUT 0.62-11NC HEX ZN REG	
20	AG551015	2	WASHER 0.31 FL ZN REG TYPE-B	
21	AG551031	2	BOLT 0.62-11NCX 4.00 G5 ZN HHD	
24	AG559199	1	BOLT 0.62-11NCX 6.50 G5 ZN HHD	
27	6507096	2	PIN-CLEVIS	
28	6538287	2	RING-SNAP	
30	6613050	2	BUSHING-OILITE	
31	6617579	4	BUSHING-RUBBER	
32	6617582	1	BELLCRANK-W/A	
33	6620417	-	RUBBER-STRIP [BULK: 5.542 FT]	
34	6626010	1	TUBE-W/A SUPPORT,RH	
35	6626119	5	U-BOLT	
36	6626198	4	PAD	
37	6626401	2	BOLT-EYE	
39	6626691	1	CONDUIT	
40	6626692	1	CHAIN	
41	6633446	1	PIN-CLEVIS	
45	6664598	1	SHOCK-DAMPER	
46	6802718	1	HINGE-W/A,RH	
47	WR37574	1	PIN-SPRING,MOUNT	
51	WR39035	1	INNER BOOM WLDMT-60 FT & 80 FT ,RH	
53	WR55688	2	COLLAR-SET,7/16 ID	
54	WR55921	2	SPRING-BOOM	

Copyright © 2007 AGCO Corporation

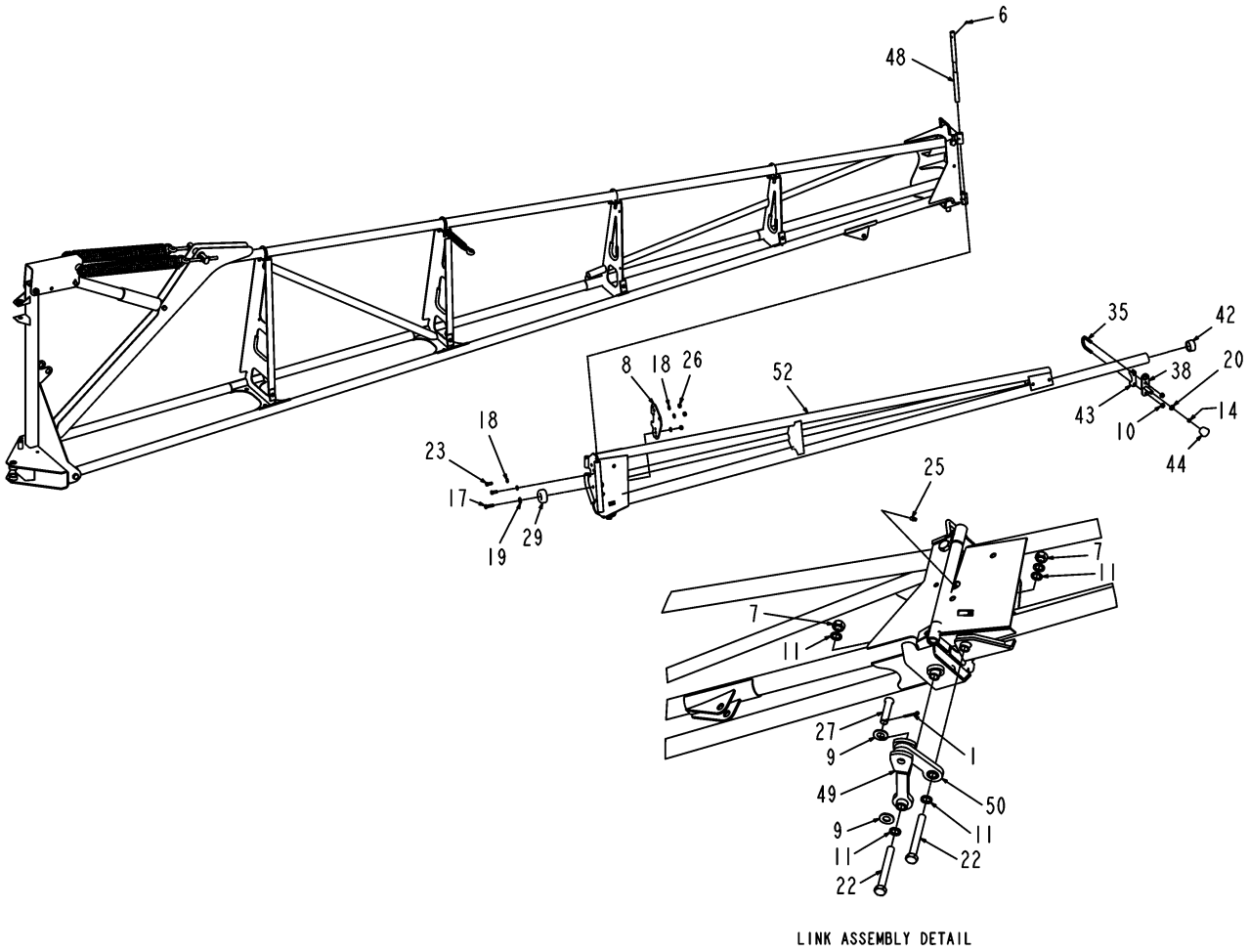

123366-D-M113-02.TIF

Copyright © 2007 AGCO Corporation

BOOM GRP-RH,60 FT

ITEM	PART #	QTY	DESCRIPTION	COMMENTS
1	WR10339	3	PIN-COTTER,1/8 X 1 1/4	
6	WR55134	1	PIN-STR,COILED,3/16 X 1	
7	WR55355	4	NUT-TOPLOCK,5/8-11UNC G8	
8	WR122322	1	PLATE-BACKING,BOOM HINGE	
9	AG515180	2	WASHER 0.62 FL ZN SAE TYP-A G8	
10	AG520885	8	NUT-.38-16,G5,ZN,FLG,H	
11	WR524542	5	WASHER-.98ODX.64IDX.075RC42-50	
14	AG550213	1	NUT 0.31-18NC HEX ZN REG	
17	AG550779	1	BOLT 0.37-16NCX 1.50 G5 ZN HHD	
18	AG550981	5	WASHER 0.37 FL ZN NAR TYPE-B	
19	AG551007	1	WASHER 0.37 FL ZN REG TYPE-B	
20	AG551015	2	WASHER 0.31 FL ZN REG TYPE-B	
22	AG553069	2	BOLT 0.62-11NCX 5.00 G5 ZN HHD	
23	AG555819	2	BOLT 0.37-16NCX 1.00 G5 PL HHD	
25	AG561892	24	FITTING LUBE STR 0.25UNF	
26	AG601411	3	NUT 0.37-16NC HEX ZN REG NY	
27	6507096	2	PIN-CLEVIS	
29	6584225	1	BUMPER-RUBBER,RECESSED	
35	6626119	5	U-BOLT	
38	6626690	1	SUPPORT-W/A	
42	6659910	1	CAP	
43	6660351	1	CLAMP-SADDLE	
44	6661800	1	BUMPER-MOLDED	
48	WR37777	1	ROUND -CR 1045, .750 DIA	
49	WR38719	1	LINK ASSY-WING FOLD,INNER	SEE PAGE 18-19
50	WR38720	1	LINK ASSY-WING FOLD,OUTER	SEE PAGE 18-20
52	WR39087	1	EXTENSION WLDMT-HYD,60 FT	

Copyright © 2007 AGCO Corporation

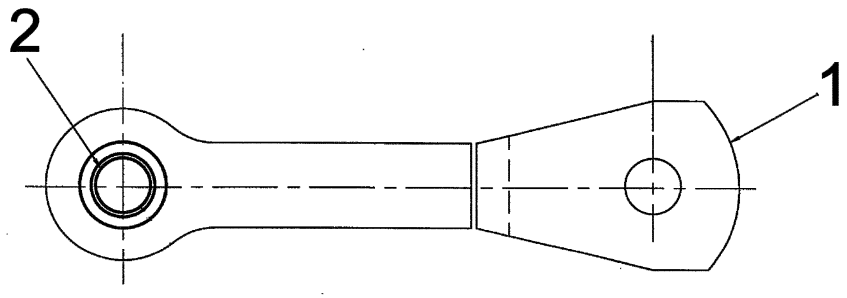

WR38719-A.tif

Copyright © 2007 AGCO Corporation

LINK ASSY-WING FOLD,INNER

ITEM	PART #	QTY	DESCRIPTION	COMMENTS
1	WR38718	1	PIVOT LINK-MACHINED	
2	6613050	1	BUSHING-OILITE	

Copyright © 2007 AGCO Corporation

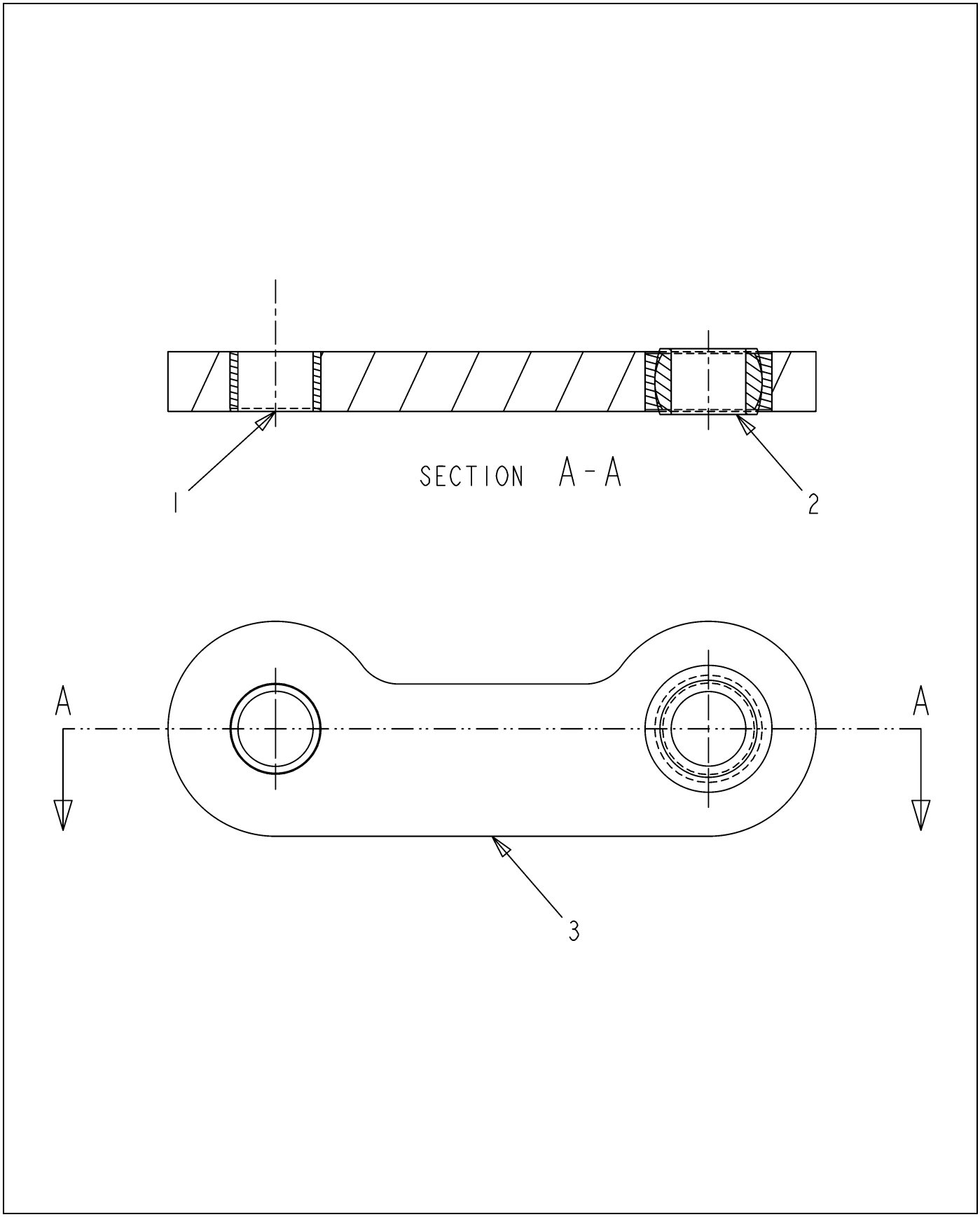

WR38720-C-1.TIF

Copyright © 2007 AGCO Corporation

LINK ASSY-WING FOLD,OUTER

ITEM	PART #	QTY	DESCRIPTION	COMMENTS
1	6613050	0.500	BUSHING-OILITE	
2	WR37567	1	BEARING-SPERICAL,.625ID	
3	WR38716	1	LINK-BOOM FOLD,MACH-""NOT USED""	

Copyright © 2007 AGCO Corporation

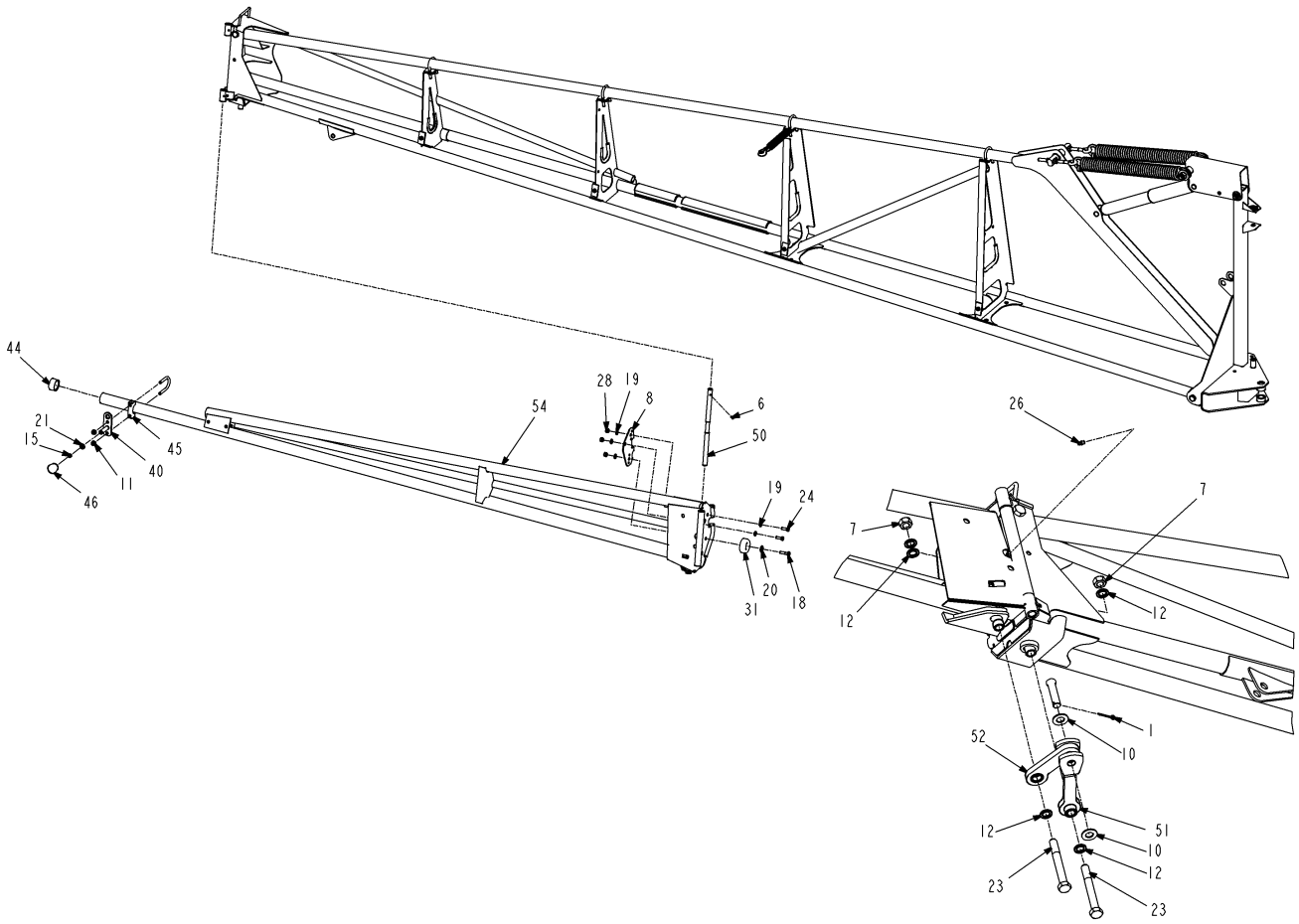

123367-05-R199-02.TIF

Copyright © 2007 AGCO Corporation

BOOM GRP-LH,60 FT

ITEM	PART #	QTY	DESCRIPTION	COMMENTS
1	WR10339	3	PIN-COTTER,1/8 X 1 1/4	
2	WR10896	2	TUBE-RM, 1.31 OD X.250W X	
3	WR11543	1	NUT-TOPLOCK, 3/4-10UNC G5	
4	WR17220	2	TUBE-RM, 1.31 OD X.250W X	
5	WR21845	1	SCREW-CAP HEX 3/4 NC X 8	
6	WR55134	1	PIN-STR,COILED,3/16 X 1	
7	WR55355	4	NUT-TOPLOCK,5/8-11UNC G8	
8	WR122322	1	PLATE-BACKING,BOOM HINGE	
9	AG513393	-	HOSE 1.25 2BRD EPDM [BULK: 2.100 FT]	
10	AG515180	2	WASHER 0.62 FL ZN SAE TYP-A G8	
11	AG520885	8	NUT-.38-16,G5,ZN,FLG,H	
12	WR524542	5	WASHER-.98ODX.64IDX.075RC42-50	
13	AG550116	4	WASHER 0.75 FL ZN REG TYPE-B	
14	AG550124	4	NUT 0.50-13NC HEX ZN REG	
15	AG550213	1	NUT 0.31-18NC HEX ZN REG	
16	AG550469	2	BOLT 0.62-11NCX 3.50 G5 ZN HHD	
17	AG550477	4	NUT 0.62-11NC HEX ZN REG	
18	AG550779	1	BOLT 0.37-16NCX 1.50 G5 ZN HHD	
19	AG550981	5	WASHER 0.37 FL ZN NAR TYPE-B	
20	AG551007	1	WASHER 0.37 FL ZN REG TYPE-B	
21	AG551015	2	WASHER 0.31 FL ZN REG TYPE-B	
22	AG551031	1	BOLT 0.62-11NCX 4.00 G5 ZN HHD	
23	AG553069	2	BOLT 0.62-11NCX 5.00 G5 ZN HHD	
24	AG555819	2	BOLT 0.37-16NCX 1.00 G5 PL HHD	
25	AG559199	1	BOLT 0.62-11NCX 6.50 G5 ZN HHD	
26	AG561892	1	FITTING LUBE STR 0.25UNF	
27	AG562496	4	TIE CABLE 15.0 .18-4.00 BLACK	
28	AG601411	3	NUT 0.37-16NC HEX ZN REG NY	
29	6507096	2	PIN-CLEVIS	
30	6538287	2	RING-SNAP	
31	6584225	1	BUMPER-RUBBER,RECESSED	
32	6613050	2	BUSHING-OILITE	
33	6617579	4	BUSHING-RUBBER	
34	6617582	1	BELLCRANK-W/A	
35	6620417	-	RUBBER-STRIP [BULK: 5.542 FT]	
36	6626011	1	TUBE-W/A SUPPORT,LH	
37	6626119	5	U-BOLT	
38	6626198	4	PAD	
39	6626401	2	BOLT-EYE	
40	6626690	1	SUPPORT-W/A	
41	6626691	1	CONDUIT	
42	6626692	1	CHAIN	
43	6633446	1	PIN-CLEVIS	
44	6659910	1	CAP	
45	6660351	1	CLAMP-SADDLE	
46	6661800	1	BUMPER-MOLDED	
50	WR37777	1	ROUND -CR 1045, .750 DIA	
51	WR38719	1	LINK ASSY-WING FOLD,INNER	SEE PAGE 18-19
52	WR38720	1	LINK ASSY-WING FOLD,OUTER	SEE PAGE 18-20
54	WR39088	1	EXTENSION WLDMT-HYD,60 FT	

Copyright © 2007 AGCO Corporation

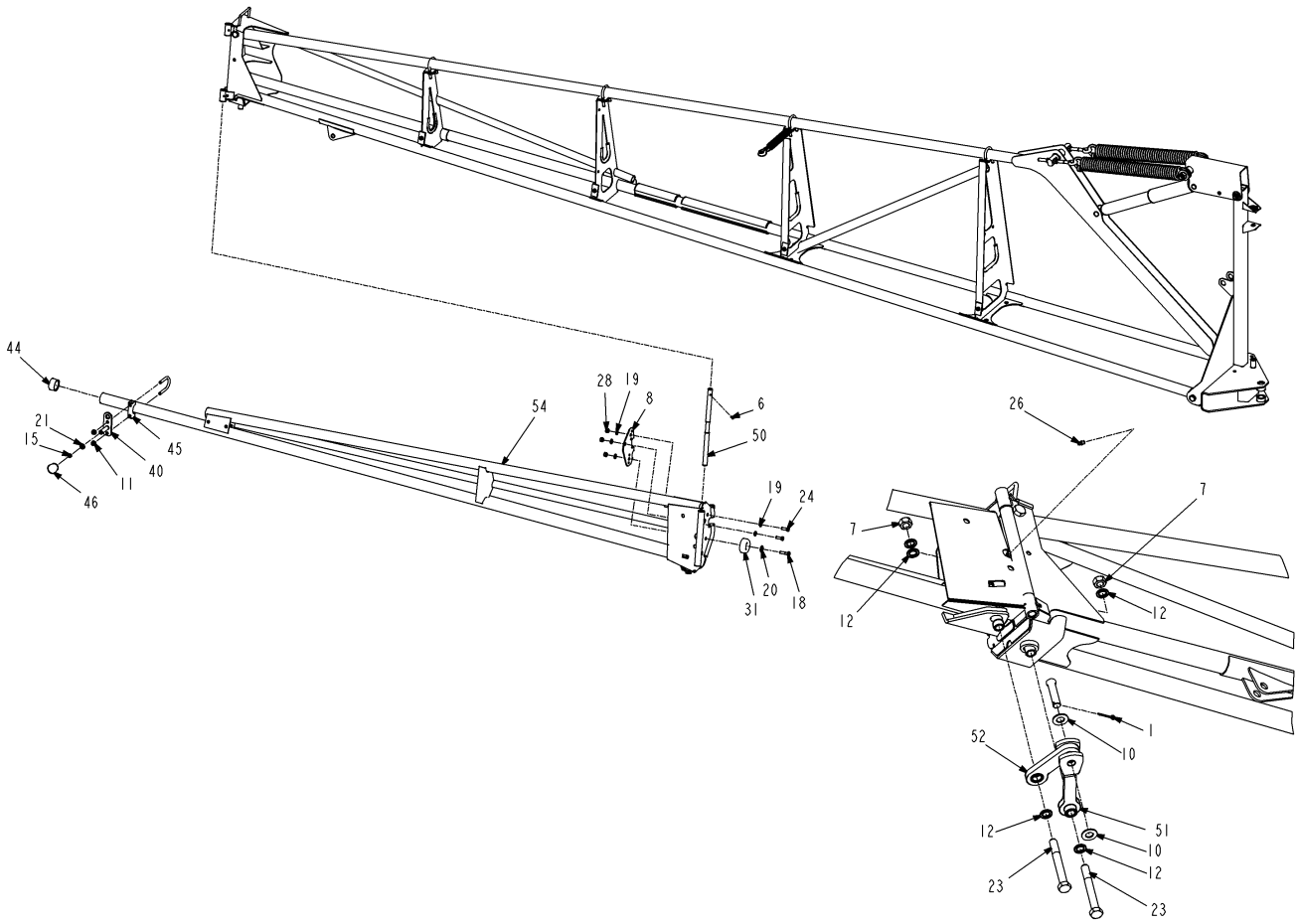

123367-05-R199-02.TIF

Copyright © 2007 AGCO Corporation

BOOM GRP-LH,60 FT

ITEM	PART #	QTY	DESCRIPTION	COMMENTS
47	6664598	1	SHOCK-DAMPER	
48	6802717	1	HINGE-W/A,LH	
49	WR37574	1	PIN-SPRING,MOUNT	
53	WR39036	1	INNER BOOM WLDMT-60 FT & 80 FT ,LH	
55	WR55688	2	COLLAR-SET,7/16 ID	
56	WR55921	2	SPRING-BOOM	

Copyright © 2007 AGCO Corporation

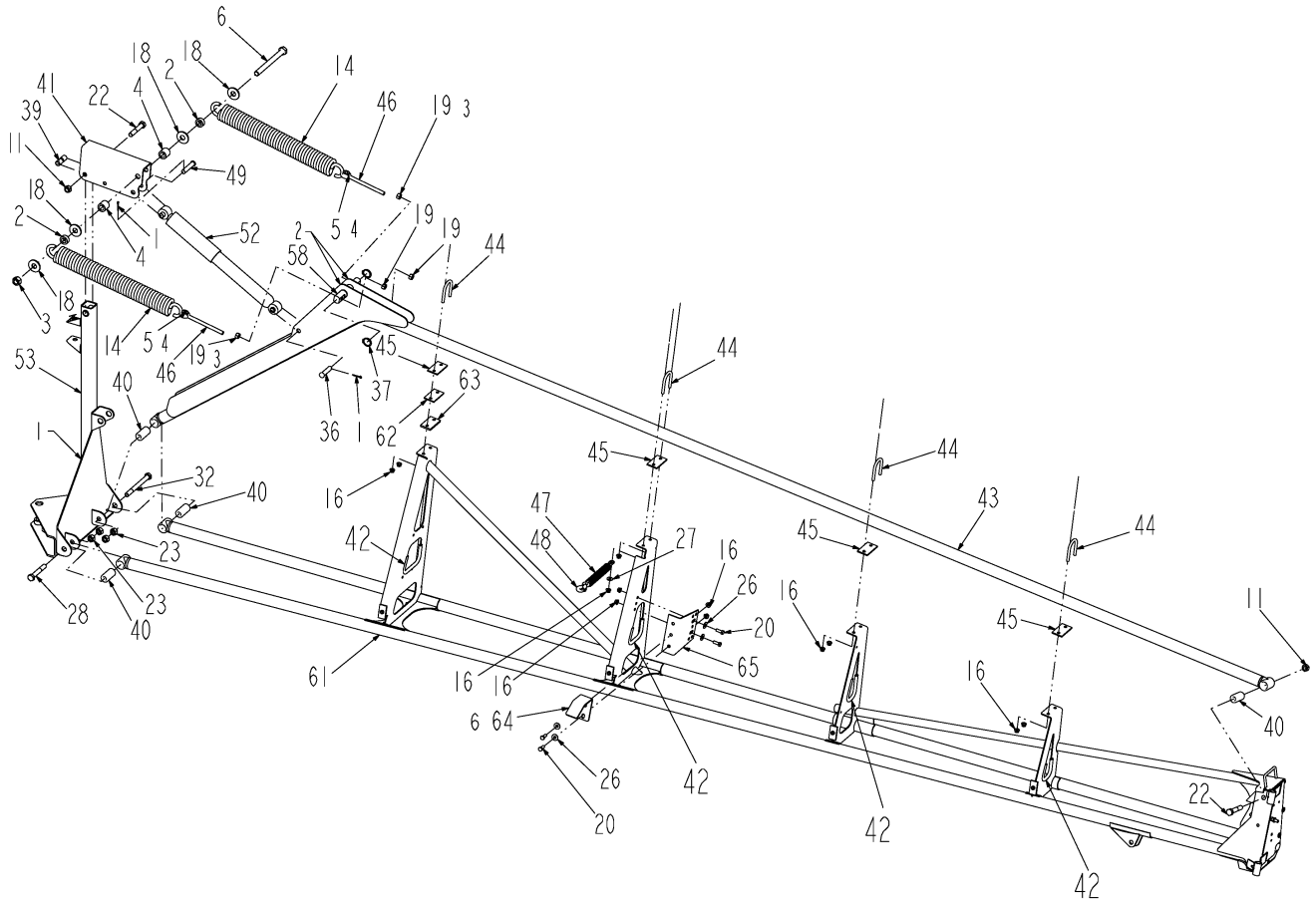

123368-06-N046-01.TIF

Copyright © 2007 AGCO Corporation

BOOM GRP-RH,80 FT

ITEM	PART #	QTY	DESCRIPTION	COMMENTS
1	WR10339	3	PIN-COTTER,1/8 X 1 1/4	
2	WR10896	2	TUBE-RM, 1.31 OD X.250W X	
3	WR11543	1	NUT-TOPLOCK, 3/4-10UNC G5	
4	WR17220	2	TUBE-RM, 1.31 OD X.250W X	
5	WR18672	2	COLLAR-SET, 1/2 ID	
6	WR21845	1	SCREW-CAP HEX 3/4 NC X 8	
11	WR55355	4	NUT-TOPLOCK,5/8-11UNC G8	
14	WR122553	2	SPRING-BOOM (REPLACES WR55982)	
16	AG520885	14	NUT-.38-16,G5,ZN,FLG,H	
18	AG550116	4	WASHER 0.75 FL ZN REG TYPE-B	
19	AG550124	4	NUT 0.50-13NC HEX ZN REG	
20	AG550175	4	BOLT 0.37-16NCX 1.00 G5 ZN HHD	
22	AG550469	2	BOLT 0.62-11NCX 3.50 G5 ZN HHD	
23	AG550477	4	NUT 0.62-11NC HEX ZN REG	
26	AG551007	6	WASHER 0.37 FL ZN REG TYPE-B	
27	AG551015	1	WASHER 0.31 FL ZN REG TYPE-B	
28	AG551031	1	BOLT 0.62-11NCX 4.00 G5 ZN HHD	
32	AG559199	1	BOLT 0.62-11NCX 6.50 G5 ZN HHD	
36	6507096	2	PIN-CLEVIS	
37	6538287	2	RING-SNAP	
39	6613050	2	BUSHING-OILITE	
40	6617579	4	BUSHING-RUBBER	
41	6617582	1	BELLCRANK-W/A	
42	6620417	-	RUBBER-STRIP [BULK: 5.542 FT]	
43	6626010	1	TUBE-W/A SUPPORT,RH	
44	6626119	5	U-BOLT	
45	6626198	4	PAD	
46	6626401	2	BOLT-EYE	
47	6626691	1	CONDUIT	
48	6626692	1	CHAIN	
49	6633446	1	PIN-CLEVIS	
52	6664598	1	SHOCK-DAMPER	
53	6802718	1	HINGE-W/A,RH	
58	WR37574	1	PIN-SPRING,MOUNT	
61	WR39035	1	INNER BOOM WLDMT-60 FT & 80 FT ,RH	
62	WR39039	1	RECT-HRS,.134 X 1.77 X 3.15	
63	WR39040	1	RECT-HRS,.250X1.77X3.15	
64	WR55988	1	RAMP-BOOM CATCH	
65	WR55990	1	BRACKET-RAMP	

Copyright © 2007 AGCO Corporation

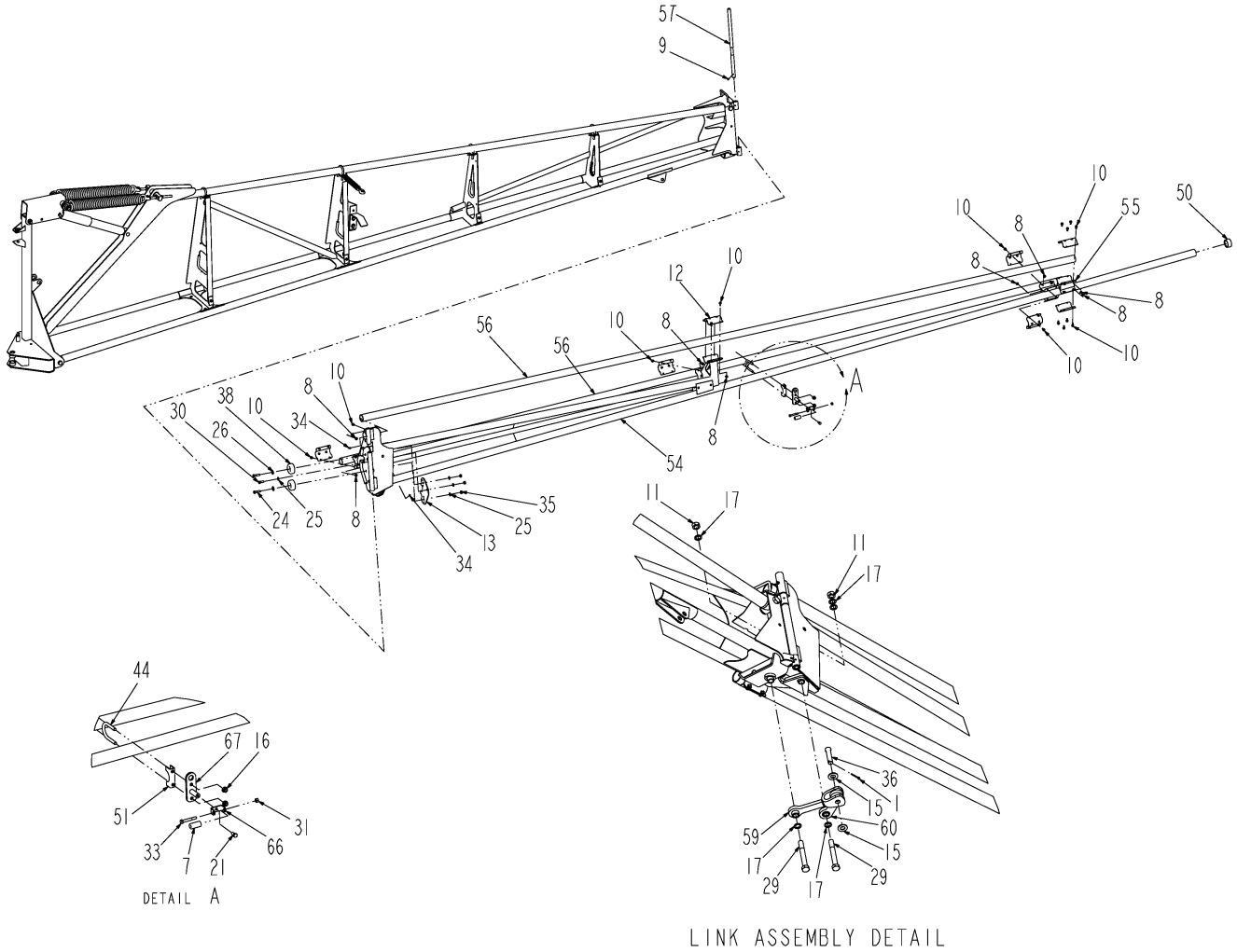

123368-06-N046-02.TIF

Copyright © 2007 AGCO Corporation

BOOM GRP-RH,80 FT

ITEM	PART #	QTY	DESCRIPTION	COMMENTS
1	WR10339	3	PIN-COTTER,1/8 X 1 1/4	
7	WR25293	1	TUBE-NYLON,LATCH STOP	
8	AG029161	32	NUT 0.25-20NC HX ZN WHIZ LK(D)	
9	WR55134	1	PIN-STR,COILED,3/16 X 1	
10	WR55255	32	SCREW-HEX FLG,.25NCX.625 GR5	
11	WR55355	4	NUT-TOPLOCK,5/8-11UNC G8	
12	WR120567	7	CLAMP-TUBE, 1.75 OD	
13	WR122322	1	PLATE-BACKING,BOOM HINGE	
15	AG515180	2	WASHER 0.62 FL ZN SAE TYP-A G8	
16	AG520885	14	NUT-.38-16,G5,ZN,FLG,H	
17	WR524542	5	WASHER-.98ODX.64IDX.075RC42-50	
21	AG550183	1	BOLT 0.31-18NCX 0.75 G5 ZN HHD	
24	AG550779	2	BOLT 0.37-16NCX 1.50 G5 ZN HHD	
25	AG550981	4	WASHER 0.37 FL ZN NAR TYPE-B	
26	AG551007	6	WASHER 0.37 FL ZN REG TYPE-B	
29	AG553069	2	BOLT 0.62-11NCX 5.00 G5 ZN HHD	
31	AG557668	1	NUT 0.31-18NC HEX ZN C-LK	
33	AG561251	1	BOLT 0.31-18NCX 2.25 G5 ZN HHD	
34	AG561892	2	FITTING LUBE STR 0.25UNF	
35	AG601411	3	NUT 0.37-16NC HEX ZN REG NY	
36	6507096	2	PIN-CLEVIS	
38	6584225	2	BUMPER-RUBBER,RECESSED	
44	6626119	5	U-BOLT	
50	6659910	1	CAP	
51	6660351	1	CLAMP-SADDLE	
54	WR37461	1	EXTENSION WLDMT-80 FT , RH	
55	WR37463	2	CLAMP WLDMT	
56	WR37483	2	TUBE-BOOM,FIBERGLASS 1/8x	
57	WR37534	1	ROUND-CR 1045,.750 DIA. X	
59	WR38719	1	LINK ASSY-WING FOLD,INNER	SEE PAGE 18-19
60	WR38720	1	LINK ASSY-WING FOLD,OUTER	SEE PAGE 18-20
66	WR55992	1	BRACKET-ROLLER	
67	WR55993	1	SUPPORT W/A-ROLLER	

Copyright © 2007 AGCO Corporation

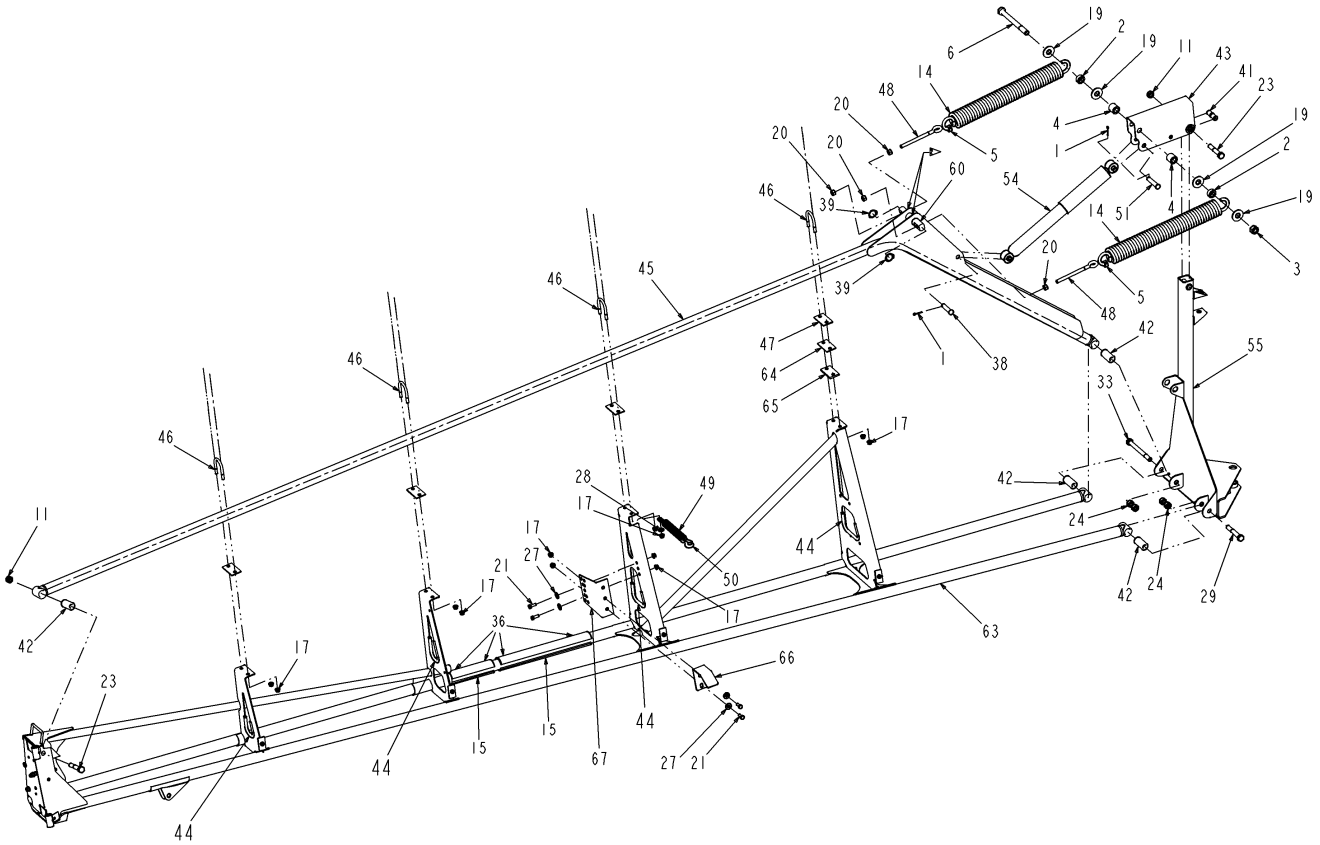

123369-05-R199-01.TIF

Copyright © 2007 AGCO Corporation

BOOM GRP-LH,80 FT

ITEM	PART #	QTY	DESCRIPTION	COMMENTS
1	WR10339	3	PIN-COTTER,1/8 X 1 1/4	
2	WR10896	2	TUBE-RM, 1.31 OD X.250W X	
3	WR11543	1	NUT-TOPLOCK, 3/4-10UNC G5	
4	WR17220	2	TUBE-RM, 1.31 OD X.250W X	
5	WR18672	2	COLLAR-SET, 1/2 ID	
6	WR21845	1	SCREW-CAP HEX 3/4 NC X 8	
11	WR55355	4	NUT-TOPLOCK,5/8-11UNC G8	
14	WR122553	2	SPRING-BOOM (REPLACES WR55982)	
15	AG513393	-	HOSE 1.25 2BRD EPDM [BULK: 2.100 FT]	
17	AG520885	14	NUT-.38-16,G5,ZN,FLG,H	
19	AG550116	4	WASHER 0.75 FL ZN REG TYPE-B	
20	AG550124	4	NUT 0.50-13NC HEX ZN REG	
21	AG550175	4	BOLT 0.37-16NCX 1.00 G5 ZN HHD	
23	AG550469	2	BOLT 0.62-11NCX 3.50 G5 ZN HHD	
24	AG550477	4	NUT 0.62-11NC HEX ZN REG	
27	AG551007	6	WASHER 0.37 FL ZN REG TYPE-B	
28	AG551015	1	WASHER 0.31 FL ZN REG TYPE-B	
29	AG551031	1	BOLT 0.62-11NCX 4.00 G5 ZN HHD	
33	AG559199	1	BOLT 0.62-11NCX 6.50 G5 ZN HHD	
36	AG562496	4	TIE CABLE 15.0 .18-4.00 BLACK	
38	6507096	2	PIN-CLEVIS	
39	6538287	2	RING-SNAP	
41	6613050	1	BUSHING-OILITE	
42	6617579	4	BUSHING-RUBBER	
43	6617582	1	BELLCRANK-W/A	
44	6620417	-	RUBBER-STRIP [BULK: 5.542 FT]	
45	6626011	1	TUBE-W/A SUPPORT,LH	
46	6626119	5	U-BOLT	
47	6626198	4	PAD	
48	6626401	2	BOLT-EYE	
49	6626691	1	CONDUIT	
50	6626692	1	CHAIN	
51	6633446	1	PIN-CLEVIS	
54	6664598	1	SHOCK-DAMPER	
55	6802717	1	HINGE-W/A,LH	
60	WR37574	1	PIN-SPRING,MOUNT	
63	WR39036	1	INNER BOOM WLDMT-60 FT & 80 FT ,LH	
64	WR39039	1	RECT-HRS,.134 X 1.77 X 3.15	
65	WR39040	1	RECT-HRS,.250X1.77X3.15	
66	WR55988	1	RAMP-BOOM CATCH	
67	WR55990	1	BRACKET-RAMP	

Copyright © 2007 AGCO Corporation

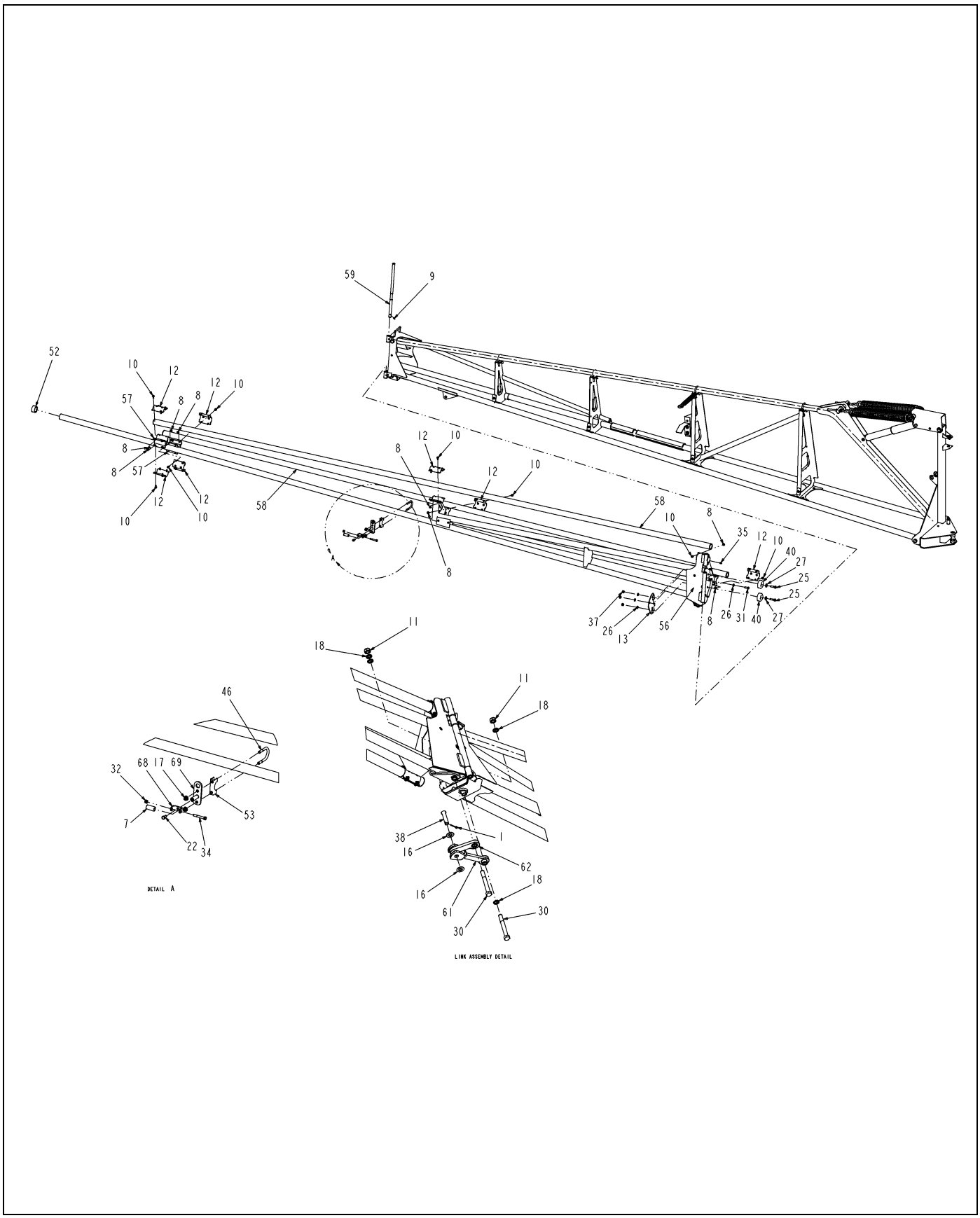

123369-05-R199-02.TIF

Copyright © 2007 AGCO Corporation

BOOM GRP-LH,80 FT

ITEM	PART #	QTY	DESCRIPTION	COMMENTS
1	WR10339	3	PIN-COTTER,1/8 X 1 1/4	
7	WR25293	1	TUBE-NYLON,LATCH STOP	
8	AG029161	32	NUT 0.25-20NC HX ZN WHIZ LK(D)	
9	WR55134	1	PIN-STR,COILED,3/16 X 1	
10	WR55255	32	SCREW-HEX FLG,.25NCX.625 GR5	
11	WR55355	4	NUT-TOPLOCK,5/8-11UNC G8	
12	WR120567	7	CLAMP-TUBE, 1.75 OD	
13	WR122322	1	PLATE-BACKING,BOOM HINGE	
16	AG515180	2	WASHER 0.62 FL ZN SAE TYP-A G8	
17	AG520885	14	NUT-.38-16,G5,ZN,FLG,H	
18	WR524542	5	WASHER-.98ODX.64IDX.075RC42-50	
22	AG550183	1	BOLT 0.31-18NCX 0.75 G5 ZN HHD	
25	AG550779	2	BOLT 0.37-16NCX 1.50 G5 ZN HHD	
26	AG550981	4	WASHER 0.37 FL ZN NAR TYPE-B	
27	AG551007	6	WASHER 0.37 FL ZN REG TYPE-B	
30	AG553069	2	BOLT 0.62-11NCX 5.00 G5 ZN HHD	
31	AG555819	1	BOLT 0.37-16NCX 1.00 G5 PL HHD	
32	AG557668	1	NUT 0.31-18NC HEX ZN C-LK	
34	AG561251	1	BOLT 0.31-18NCX 2.25 G5 ZN HHD	
35	AG561892	2	FITTING LUBE STR 0.25UNF	
37	AG601411	3	NUT 0.37-16NC HEX ZN REG NY	
38	6507096	2	PIN-CLEVIS	
40	6584225	2	BUMPER-RUBBER,RECESSED	
46	6626119	5	U-BOLT	
52	6659910	1	CAP	
53	6660351	1	CLAMP-SADDLE	
56	WR37462	1	EXTENSION WLDMT-80 FT , LH	
57	WR37463	2	CLAMP WLDMT	
58	WR37483	2	TUBE-BOOM,FIBERGLASS 1/8x	
59	WR37534	1	ROUND-CR 1045,.750 DIA. X	
61	WR38719	1	LINK ASSY-WING FOLD,INNER	SEE PAGE 18-19
62	WR38720	1	LINK ASSY-WING FOLD,OUTER	SEE PAGE 18-20
68	WR55992	1	BRACKET-ROLLER	
69	WR55993	1	SUPPORT W/A-ROLLER	

Copyright © 2007 AGCO Corporation

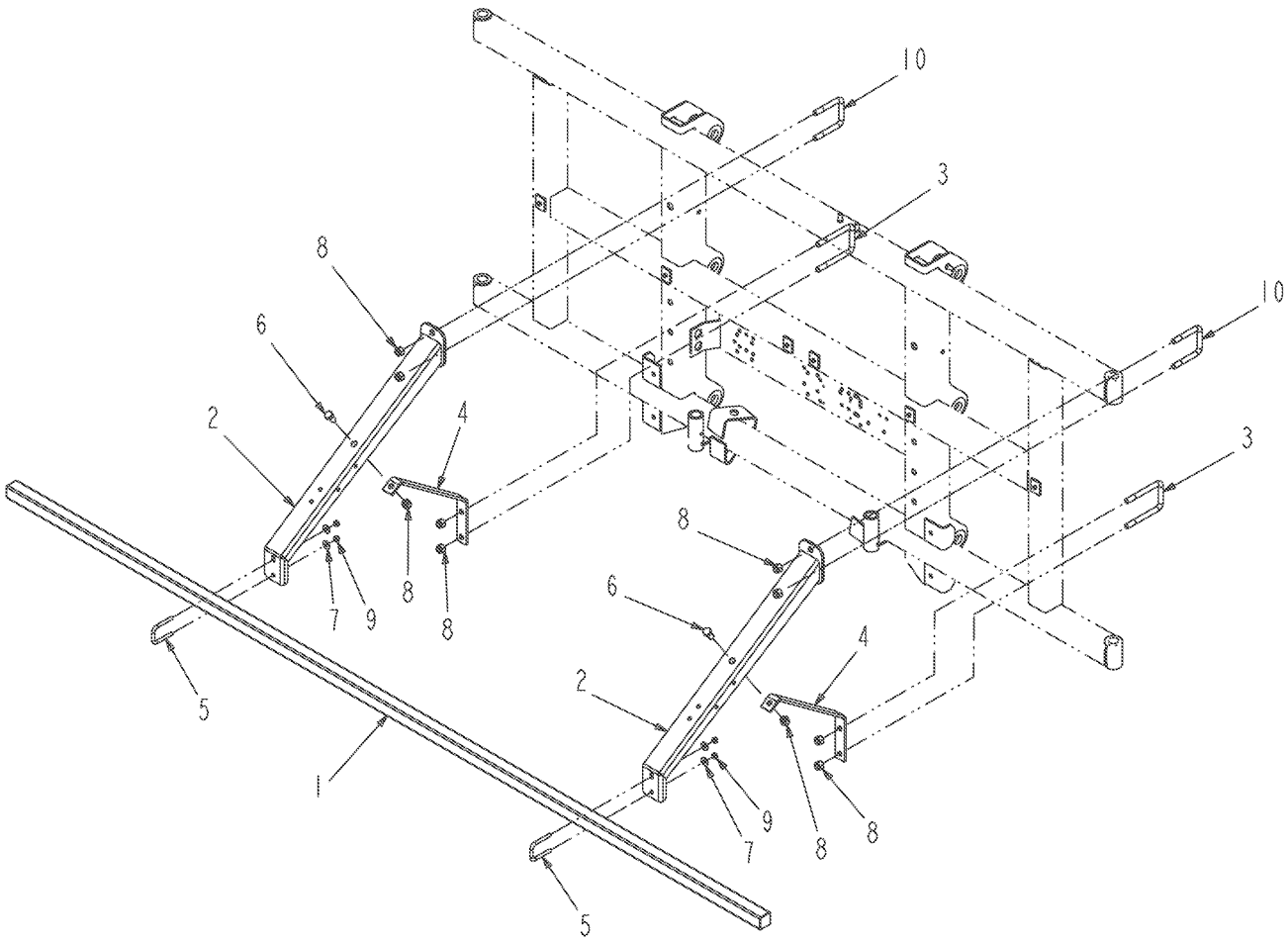

133801-03-M883-.TIF

Copyright © 2007 AGCO Corporation

BAR INSTL-MTG,PLMB,CTR,SC6080

ITEM	PART #	QTY	DESCRIPTION	COMMENTS
1	WR127102	1	BRKT WLDMT-MTG,BM PLMB,REAR	
2	WR127270	2	BRKT WLDMT-MTG,RR CTR,BM PLMB	
3	WR129496	2	BOLT-U .50X2.56X4.25 SQ	
4	WR129501	2	SUPPORT	
5	AG231204	2	BOLT-U .31-18X1.88X2.63	
6	AG550655	2	BOLT 0.50-13NCX 1.00 G5 ZN HHD	
7	AG551015	4	WASHER 0.31 FL ZN REG TYPE-B	
8	AG601152	10	NUT 0.50-13NC HEX ZN REG NY	
9	AG601888	4	NUT 0.31-18NC HEX ZN REG NY	
10	6620133	2	U-BOLT SQUARE,1/2 NC	

Copyright © 2007 AGCO Corporation

Please refer to the Bill Of Material on the opposite page for related Installations, Assemblies, or Parts

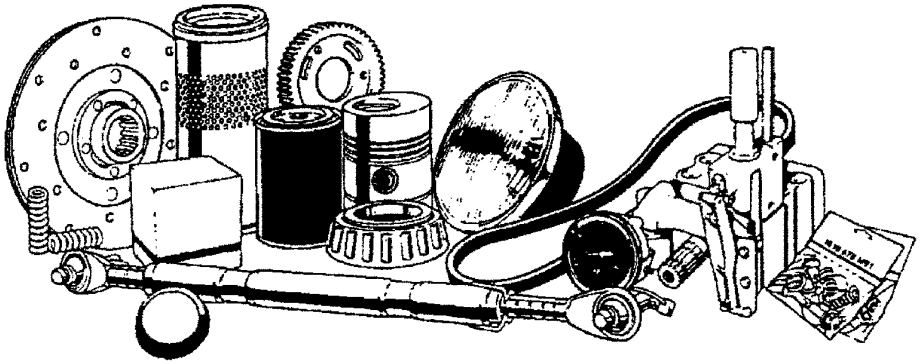

134340.tif

Copyright © 2007 AGCO Corporation

BAG-LOOSE PARTS,60/80

ITEM	PART #	QTY	DESCRIPTION	COMMENTS
1	AG029090	2	BOLT 0.87- 9NCX 5.00 G5 ZN HHD	
2	WR135300	2	SLEEVE	
3	AG550248	2	BOLT 0.62-11NCX 5.00 G8 ZN HHD	
4	AG555118	2	BOLT 0.62-11NCX 4.75 G5 ZN HHD	
5	AG560634	2	BOLT 0.75-10NCX 6.00 G5 ZN HHD	
6	AG561197	2	BOLT 1.00- 8NCX 5.00 G5 ZN HHD	
7	AG561838	2	NUT 1.00- 8NC HEX ZN C-LK	
8	AG562496	10	TIE CABLE 15.0 .18-4.00 BLACK	
9	AG601217	4	NUT 0.62-11NC HEX ZN HVY NY	
10	AG603864	2	NUT 0.75-10NC HEX ZN REG NY	
11	AG606259	2	NUT 0.87-09NC HEX ZN HVY NY	
12	6505013	1	BAG-CLOTH	
13	6800367	2	SLEEVE	

Copyright © 2007 AGCO Corporation

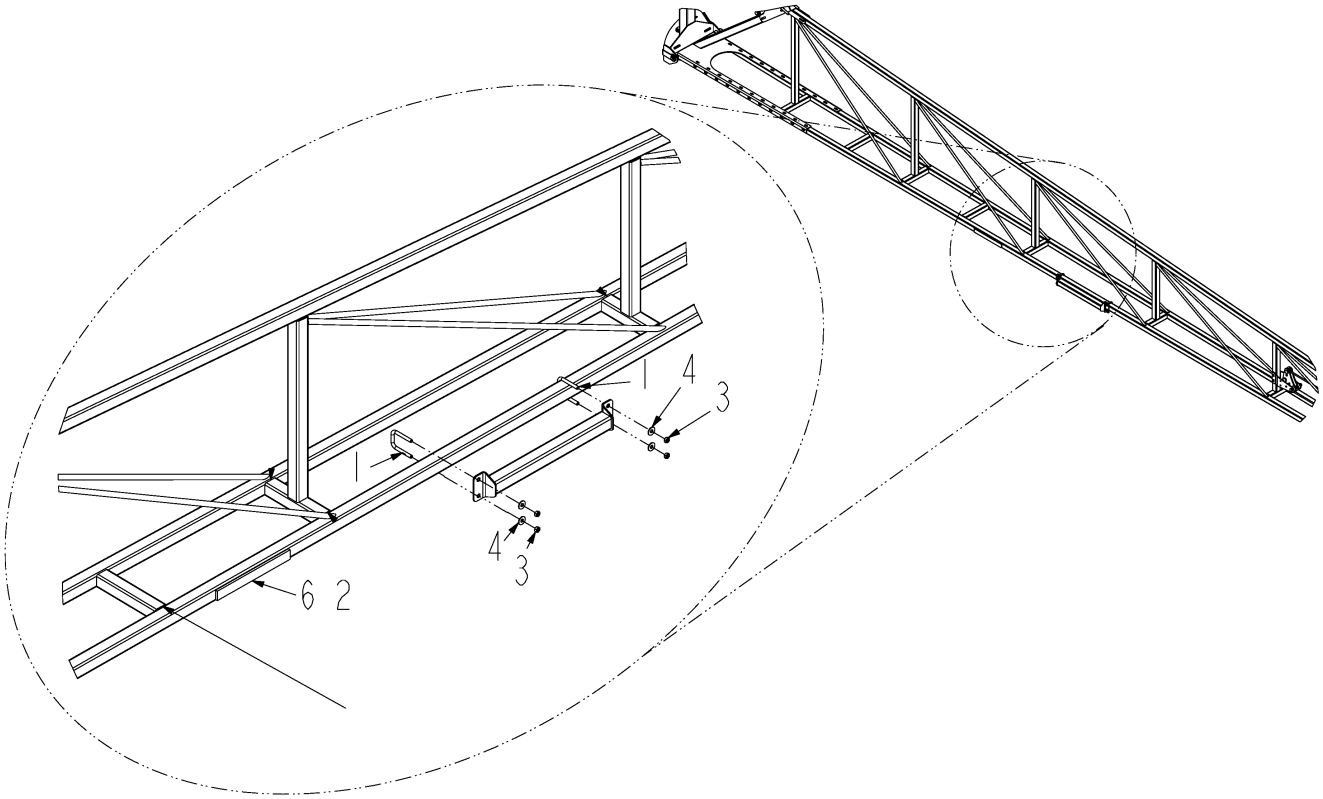

508964D1-01-N183-.TIF

Copyright © 2007 AGCO Corporation

BLOCK INSTL-BOOM REST,4X50

ITEM	PART #	QTY	DESCRIPTION	COMMENTS
1	AG231204	4	BOLT-U .31-18X1.88X2.63	
2	AG512346	AR	3M 1300 YELLOW ADHESIVE (GAL)	
3	AG516403	8	NUT 0.31-18NC HEX SS REG NY	
4	AG562074	8	WASHER 0.31 FL SS REG TYPE-B	
5	508965D1	2	BLOCK WLDMT-1.50,BOOM REST	
6	509013D1	1	MATTING-RBR,.25X1.13,10.00	

Copyright © 2007 AGCO Corporation

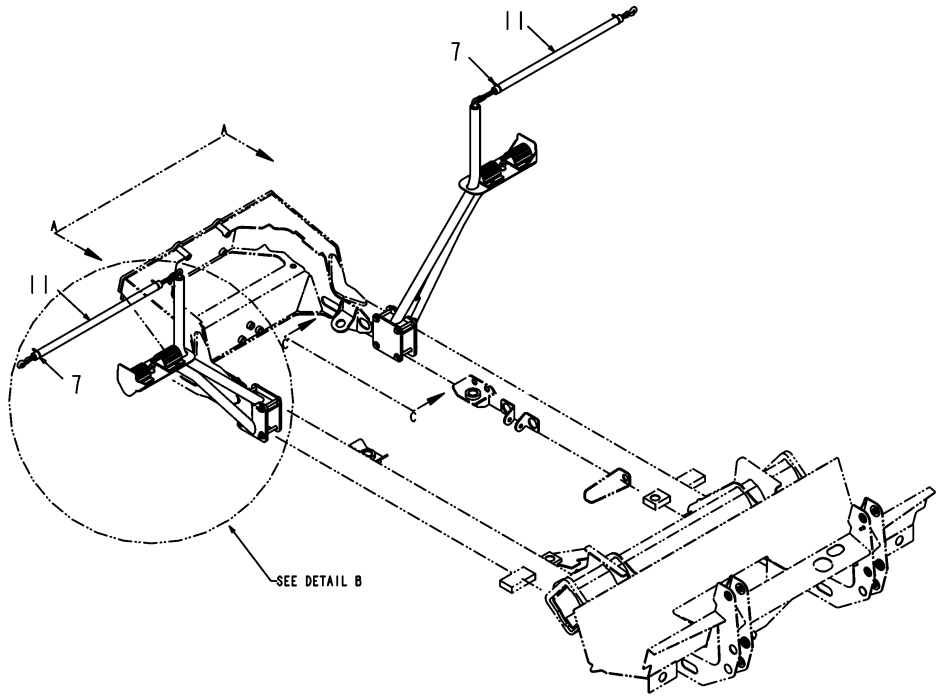

133821-A-1.TIF

Copyright © 2007 AGCO Corporation

ITEM	PART #	QTY	DESCRIPTION	COMMENTS
7	AG553557	4	TIE CABLE 7.37 .06-1.37 BLACK	
11	6537416	2	COVER-HOSE	

Copyright © 2007 AGCO Corporation

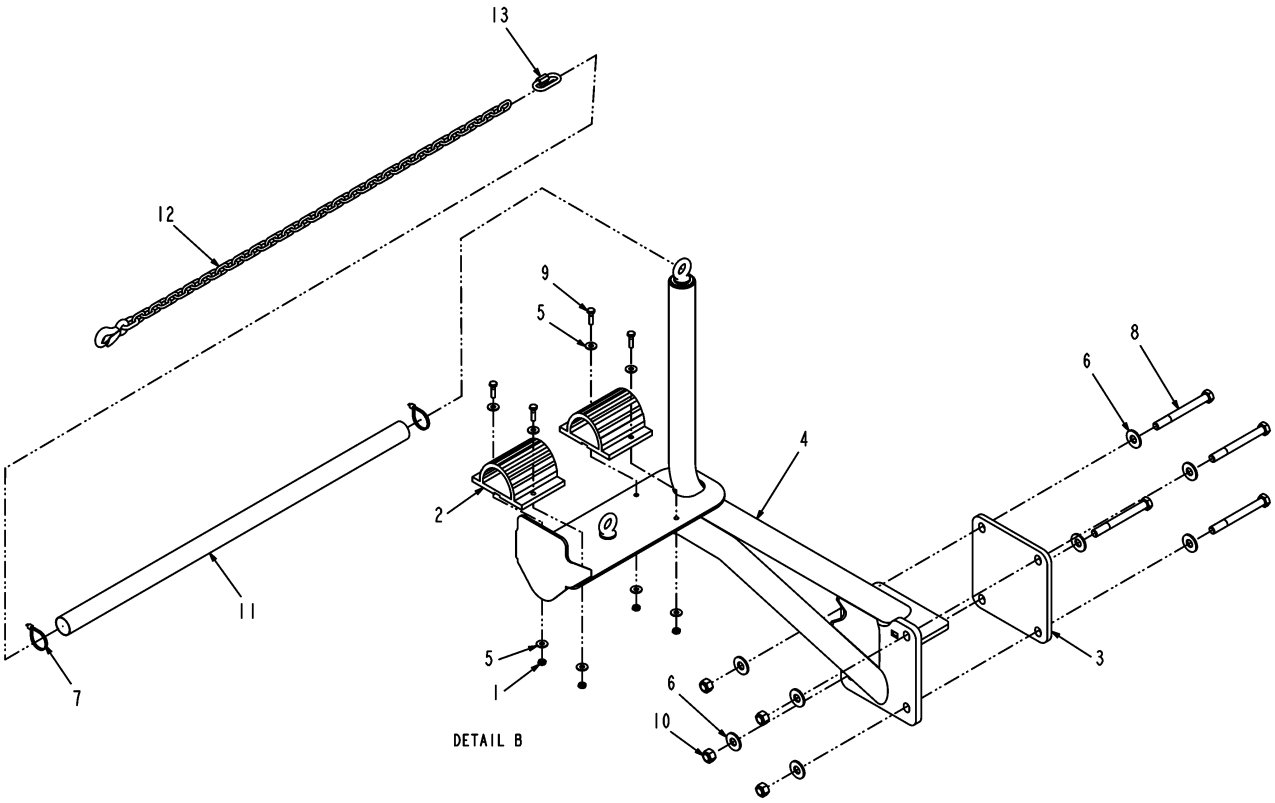

133821-A-2.TIF

Copyright © 2007 AGCO Corporation

BOOMREST INSTL-SC6080,4X50

ITEM	PART #	QTY	DESCRIPTION	COMMENTS
1	AG027275	8	NUT 0.25-20NC HEX SS REG NY	
2	AG109953	4	BUMPER-BOOM RACK	
3	WR127063	2	PLATE-BOOMREST,CLAMP	
4	WR127069	2	BOOMREST WLDMT	
5	AG515121	16	WASHER 0.25 FL SS REG TYPE-B	
6	AG550353	16	WASHER 0.50 FL ZN REG TYPE-B	
7	AG553557	4	TIE CABLE 7.37 .06-1.37 BLACK	
8	AG561809	8	BOLT 0.50-13NCX 4.75 G5 ZN HHD	
9	AG562064	8	BOLT 0.25-20NCX 1.00 SS HHD	
10	AG601152	8	NUT 0.50-13NC HEX ZN REG NY	
11	6537416	2	COVER-HOSE	
12	6617897	2	CHAIN	
13	6626327	2	LINK-CONNECTOR	

Copyright © 2007 AGCO Corporation

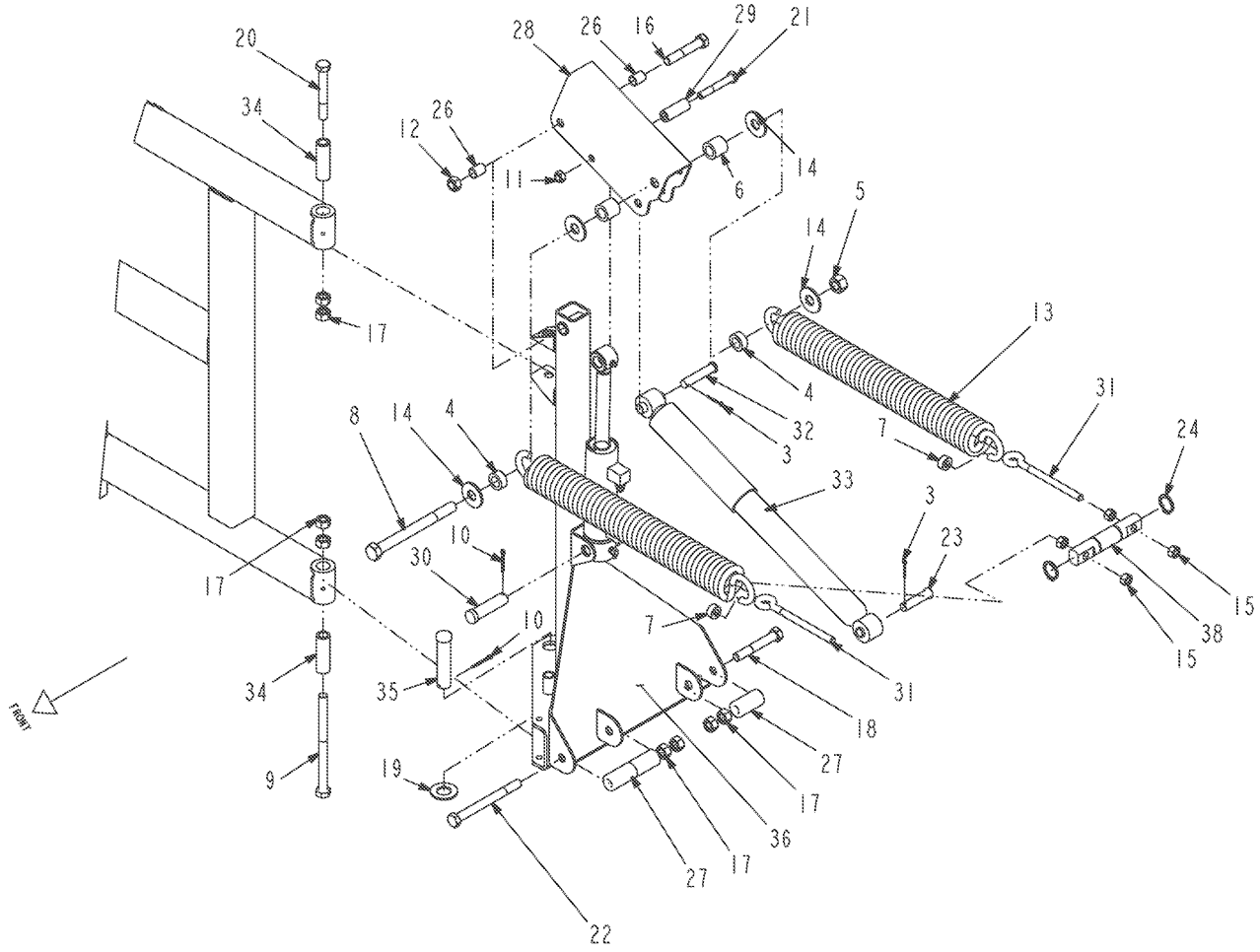

425564-05-N540-.TIF

Copyright © 2007 AGCO Corporation

KIT-LOOSE PARTS,BOOM HINGE

ITEM	PART #	QTY	DESCRIPTION	COMMENTS
1	AG002288	AR	BAG PLASTIC 6 X 10	
2	AG002358	AR	BAG PLASTIC 3X 6	
3	WR10339	4	PIN-COTTER,1/8 X 1 1/4	
4	WR10896	4	TUBE-RM, 1.31 OD X.250W X	
5	WR11546	2	NUT-TOPLOCK, 3/4-16UNF G5	
6	WR17220	4	TUBE-RM, 1.31 OD X.250W X	
7	WR18672	4	COLLAR-SET, 1/2 ID	
8	WR21845	2	SCREW-CAP HEX 3/4 NC X 8	
9	WR50814	2	SCREW-CAP HEX 5/8 NC X	
10	WR55083	4	PIN-COTTER,3/16 X 1 1/2	
11	WR55354	2	NUT-TOPLOCK, 1/2-13UNC G8	
12	WR55355	2	NUT-TOPLOCK,5/8-11UNC G8	
13	WR122553	4	SPRING-BOOM (REPLACES WR55982)	
14	AG550116	8	WASHER 0.75 FL ZN REG TYPE-B	
15	AG550124	8	NUT 0.50-13NC HEX ZN REG	
16	AG550469	2	BOLT 0.62-11NCX 3.50 G5 ZN HHD	
17	AG550477	16	NUT 0.62-11NC HEX ZN REG	
18	AG551031	2	BOLT 0.62-11NCX 4.00 G5 ZN HHD	
19	AG551856	2	WASHER 1.00 FL ZN SAE TYPE-A	
20	AG553212	2	BOLT 0.50-13NCX 3.25 G5 ZN HHD	
21	AG559199	2	BOLT 0.62-11NCX 6.50 G5 ZN HHD	
22	6507096	2	PIN-CLEVIS	
23	6538287	4	RING-SNAP	
24	6610264	1	BOX-CARDBOARD	
25	6613050	4	BUSHING-OILITE	
26	6617579	6	BUSHING-RUBBER	
27	6617582	2	BELLCRANK-W/A	
28	6618175	2	BUSHING-STL, .875 OD	
29	6618187	2	PIN-CLEVIS	
30	6626401	2	BOLT-EYE	
31	6633446	2	PIN-CLEVIS	
32	6664598	2	SHOCK-DAMPER	
33	6800367	4	SLEEVE	
35	6802711	2	PIN-CLEVIS	
36	6802717	1	HINGE-W/A,LH	
37	6802718	1	HINGE-W/A,RH	
38	WR37574	2	PIN-SPRING,MOUNT	

Copyright © 2007 AGCO Corporation

Please refer to the Bill Of Material on the opposite page for related Installations, Assemblies, or Parts

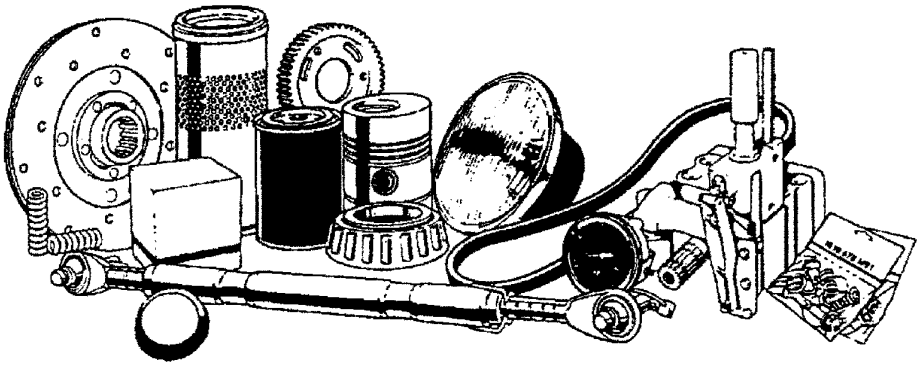

6804644.TIF

Copyright © 2007 AGCO Corporation

BAG-PARTS

ITEM	PART #	QTY	DESCRIPTION	COMMENTS
1	6802711	2	PIN-CLEVIS	
2	6800367	4	SLEEVE	
3	6618187	2	PIN-CLEVIS	
4	6618175	2	BUSHING-STL, .875 OD	
5	6505013	1	BAG-CLOTH	
6	AG562496	10	TIE CABLE 15.0 .18-4.00 BLACK	
7	AG553212	2	BOLT 0.50-13NCX 3.25 G5 ZN HHD	
8	AG552046	2	BOLT 0.62-11NCX 4.50 G5 ZN HHD	
9	AG551856	2	WASHER 1.00 FL ZN SAE TYPE-A	
10	AG550655	2	BOLT 0.50-13NCX 1.00 G5 ZN HHD	
11	AG550477	8	NUT 0.62-11NC HEX ZN REG	
12	WR55372	10	NUT-LOCK FLANGE, 1/2-13NC	
13	WR55354	4	NUT-TOPLOCK, 1/2-13UNC G8	
14	WR55083	4	PIN-COTTER,3/16 X 1 1/2	
15	WR50814	2	SCREW-CAP HEX 5/8 NC X	

Copyright © 2007 AGCO Corporation

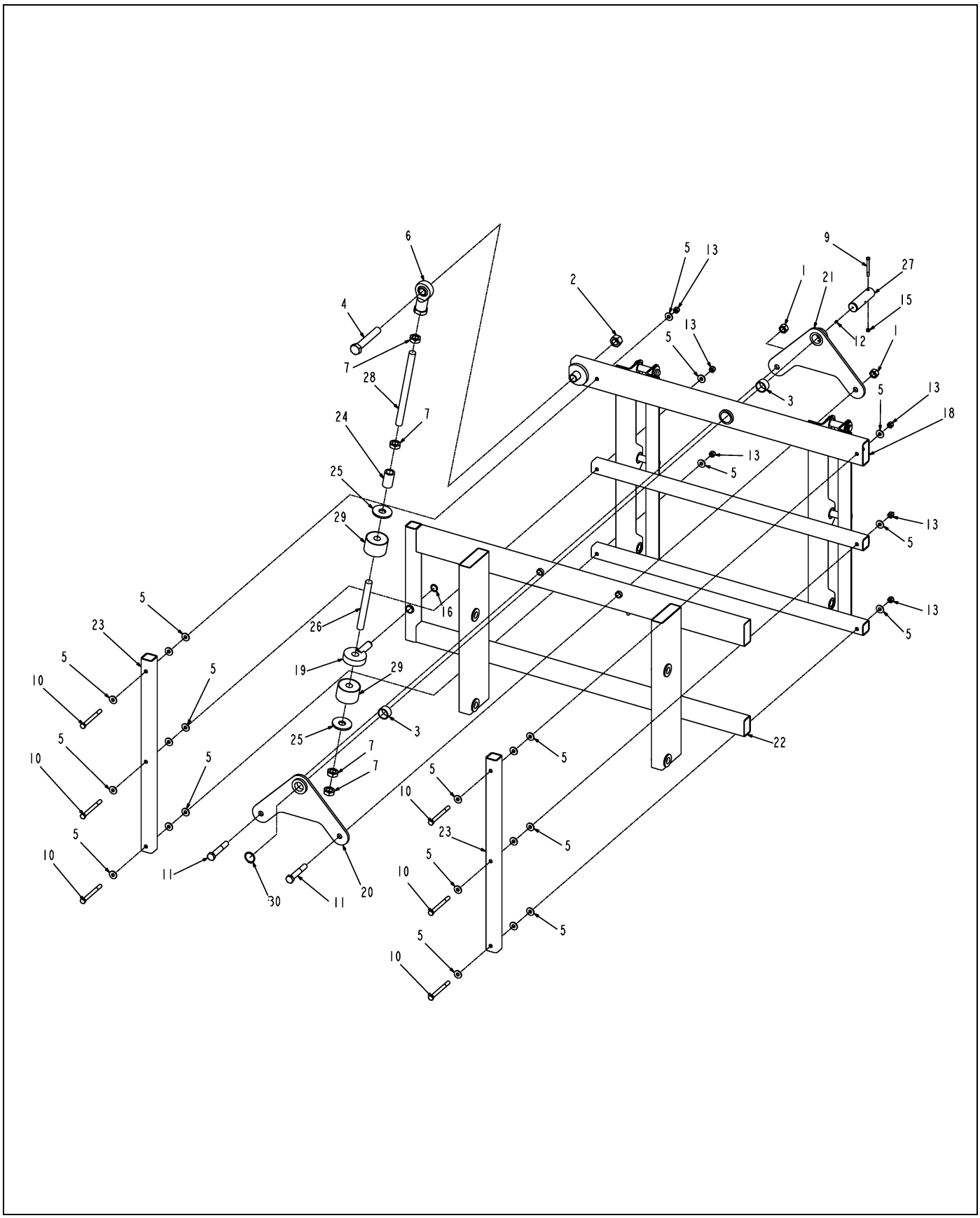

WR37476-07-N585-01.TIF

Copyright © 2007 AGCO Corporation

TILT RACK ASSEMBLY

ITEM	PART #	QTY	DESCRIPTION	COMMENTS
1	WR11543	2	NUT-TOPLOCK, 3/4-10UNC G5	
2	WR11559	1	NUT-TOPLOCK, 1-14UNF G5	
3	WR16058	-	BUSHING-BRZ,1.753X1.503ID	
4	WR30334	1	SCREW-CAP HEX 1NF X 6 1/2	
5	WR31555	24	WASHER-FLAT,STD, 1/2 ID,	
6	WR34606	1	ROD-END,1-14UNF,FEMALE	
7	WR34609	4	NUT-JAM, 1-14UNF	
9	AG550906	1	BOLT 0.31-18NCX 3.00 G5 ZN HHD	
10	AG560502	6	BOLT 0.50-13NCX 5.25 G5 ZN HHD	
11	AG561808	2	BOLT 0.75-10NCX 4.50 G5 ZN HHD	
12	AG561892	1	FITTING LUBE STR 0.25UNF	
13	AG601152	6	NUT 0.50-13NC HEX ZN REG NY	
15	AG601888	1	NUT 0.31-18NC HEX ZN REG NY	
16	6538286	1	RING-SNAP	
18	WR37432	1	RACK WLDMT-BOOM TILT	
19	WR37435	1	PIVOT WLDMT-TILT CYLINDER	
20	WR37439	1	PIVOT WLDMT-BACK SIDE	
21	WR37440	1	PIVOT WLDMT-FRONT SIDE	
22	WR37447	1	PIVOTING RACK WLDMT-BOOM	
23	WR37448	2	TUBE-SQ, 2.00 X .188W X	
24	WR37449	1	BUSHING-THREADED	
25	WR37450	2	WASHER-FAB, 3.00 OD X	
26	WR37451	1	PIN-THREADED	
27	WR37452	1	PIN-PIVOT BRACKET	
28	WR37453	1	PIN-THREADED	
29	WR37454	2	CUSHION-RUBBER MT,60 DURO	
30	WR37548	1	RING-SNAP,1.50 NOM	

Copyright © 2007 AGCO Corporation

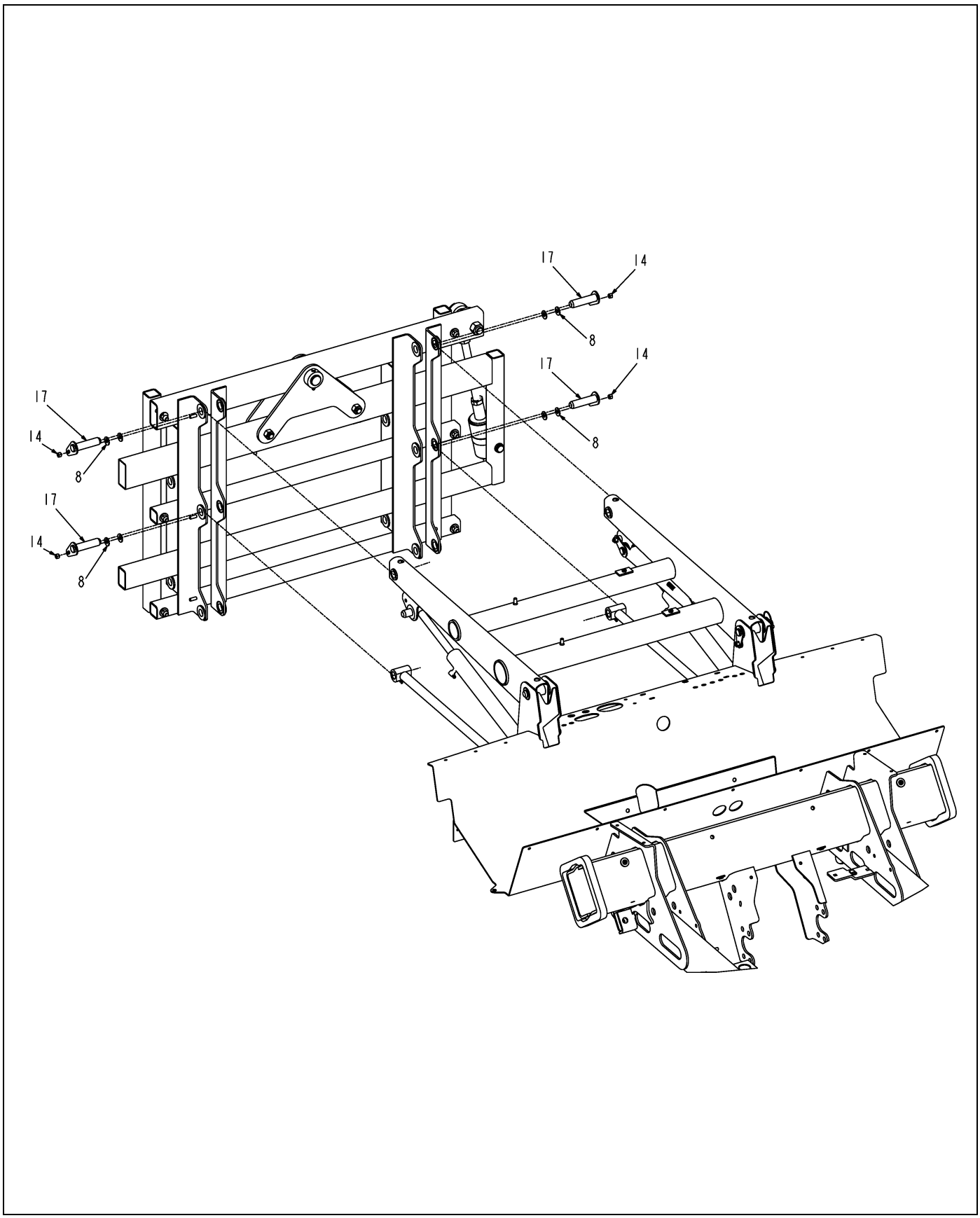

WR37476-07-N585-02.TIF

Copyright © 2007 AGCO Corporation

TILT RACK ASSEMBLY

ITEM	PART #	QTY	DESCRIPTION	COMMENTS
8	WR55158	8	WASHER-FLAT,10MM ID,	
14	AG601411	4	NUT 0.37-16NC HEX ZN REG NY	
17	6618836	4	PIN-W/A	

Copyright © 2007 AGCO Corporation

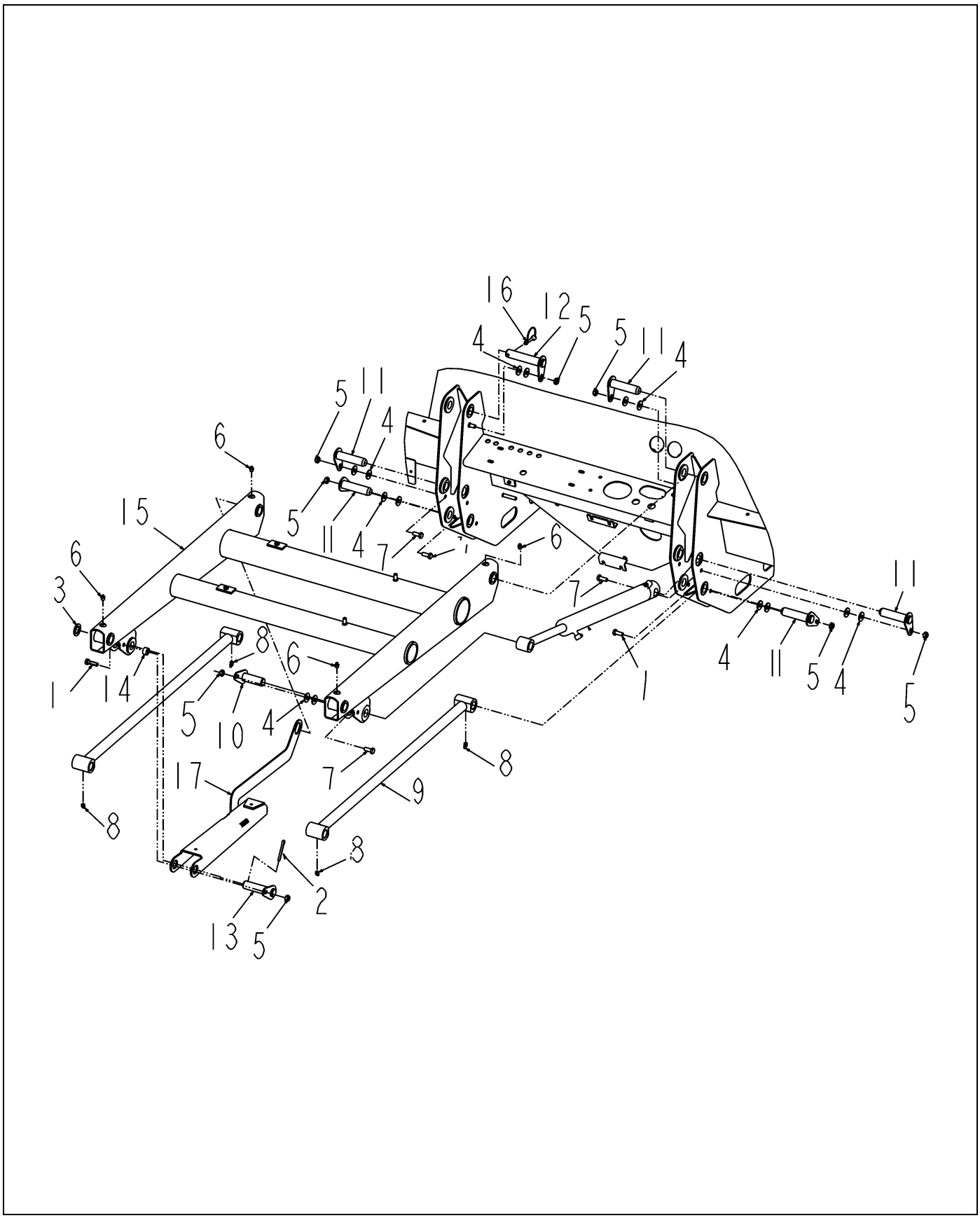

WR37564-C-1.TIF

Copyright © 2007 AGCO Corporation

BOOM LIFT GROUP

ITEM	PART #	QTY	DESCRIPTION	COMMENTS
1	AG029298	1	BOLT M10-1.50X 35MM G8.8 ZN HH	
2	WR35925	1	PIN-COTTER,1/4 X 2.00	
3	WR55079	1	WASHER-PLAIN,24MM ID,LC,	
4	WR55158	14	WASHER-FLAT,10MM ID,	
5	WR55272	8	NUT-LOCK,M10 X 1.5,PREV	
6	AG550280	4	FITTING LUB.12-27NPTFX0.68	
7	AG561683	5	BOLT M10-1.5 X 25MM G8.8 ZN HH	
8	AG562551	4	ZERK 45D 0.125 NPT	
9	6618833	2	LINK-W/A	
10	6618835	1	PIN-W/A	
11	6618836	5	PIN-W/A	
12	6626661	1	PIN-W/A	
13	6626663	1	PIN-W/A	
14	6626810	1	BUSHING	
15	6626991	1	FRAME-BOOM LIFT,W/A	
16	6656009	1	PIN-SNAPPER	
17	6804303	1	CHANNEL-W/A	

Copyright © 2007 AGCO Corporation

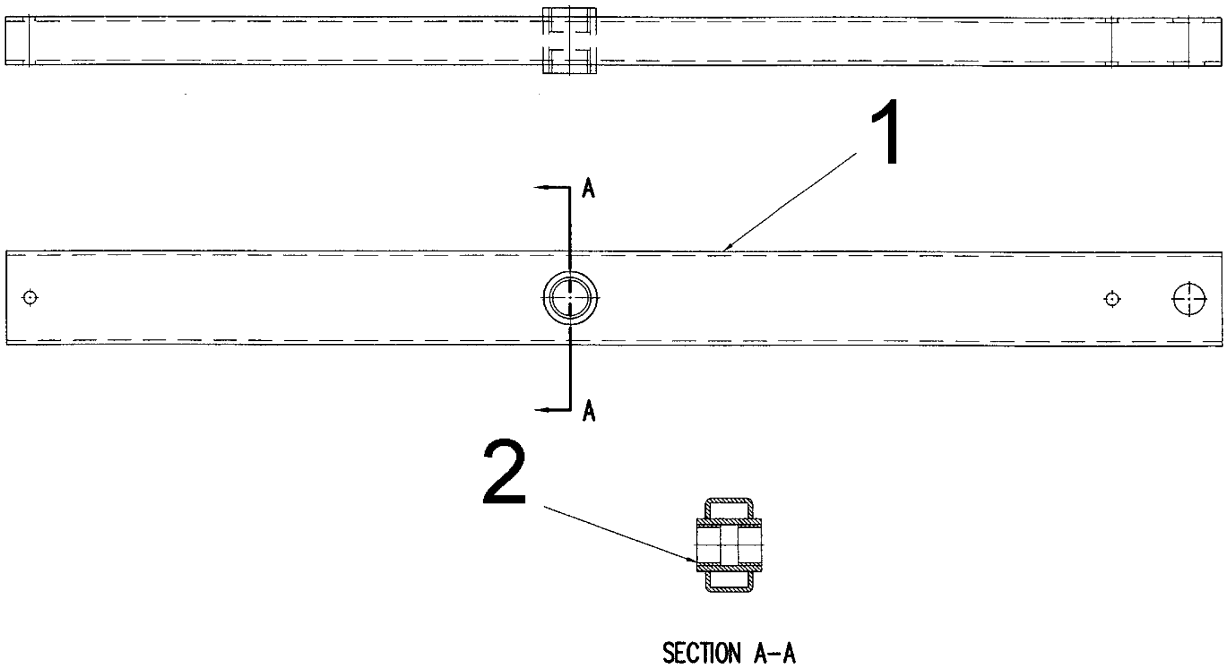

WR37776-A.TIF

Copyright © 2007 AGCO Corporation

TUBE ASSY-RACK TILT

ITEM	PART #	QTY	DESCRIPTION	COMMENTS
1	WR37775	1	TUBE WLDMT-RACK TILT	
2	WR16058	2	BUSHING-BRZ,1.753X1.503ID	

Copyright © 2007 AGCO Corporation

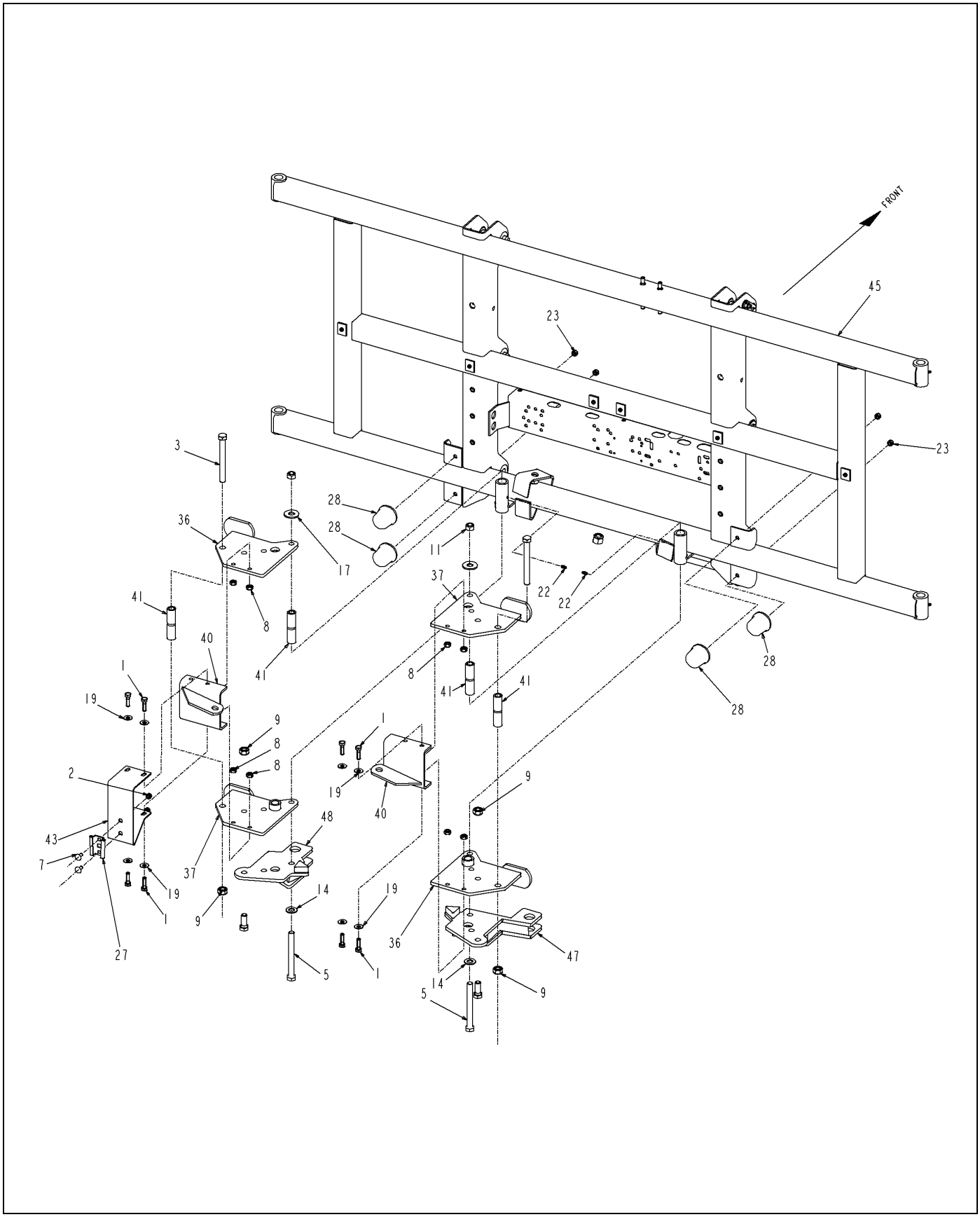

WR37810-15-N657-01.TIF

Copyright © 2007 AGCO Corporation

REAR ""H"" FRAME GROUP

ITEM	PART #	QTY	DESCRIPTION	COMMENTS
REF	WR50814	2	SCREW-CAP HEX 5/8 NC X	
1	AG029298	8	BOLT M10-1.50X 35MM G8.8 ZN HH	
2	WR32254	2	NUT-TOPLOCK,M8-1.25	
3	WR55068	2	SCREW-CAP HEX M16 X 150	
5	WR55153	2	SCREW-CAP HEX 5/8 NC X	
7	WR55172	2	BOLT-CARRIAGE,M8 X 20,	
8	WR55272	12	NUT-LOCK,M10 X 1.5,PREV	
9	WR55274	4	NUT-LK,M16X2.0,PREV TORQ,ZY	
11	WR55355	2	NUT-TOPLOCK,5/8-11UNC G8	
14	AG515180	2	WASHER 0.62 FL ZN SAE TYP-A G8	
17	AG550310	2	WASHER 0.62 FL ZN REG TYPE-B	
19	AG551007	8	WASHER 0.37 FL ZN REG TYPE-B	
22	AG561892	6	FITTING LUBE STR 0.25UNF	
23	AG601411	4	NUT 0.37-16NC HEX ZN REG NY	
27	6519752	1	SOCKET	
28	6530360	4	BUMPER-RUBBER	
36	6618840	2	PIVOT-W/A	
37	6618841	2	PIVOT WLDMT-BOOM CUSHION	
40	6624680	2	MOUNT-WLDMT,SHOCK	
41	6624692	4	SLEEVE	
43	6626929	1	BRACKET	
45	6802250	1	BOOM-CENTER FRAME,W/A	
47	6802789	1	LEVER-W/A,RH	
48	6802790	1	LEVER-W/A,LH	
51	400191X1	2	BOLT-M16X2X40MM ZNDI HHD 10.9	

Copyright © 2007 AGCO Corporation

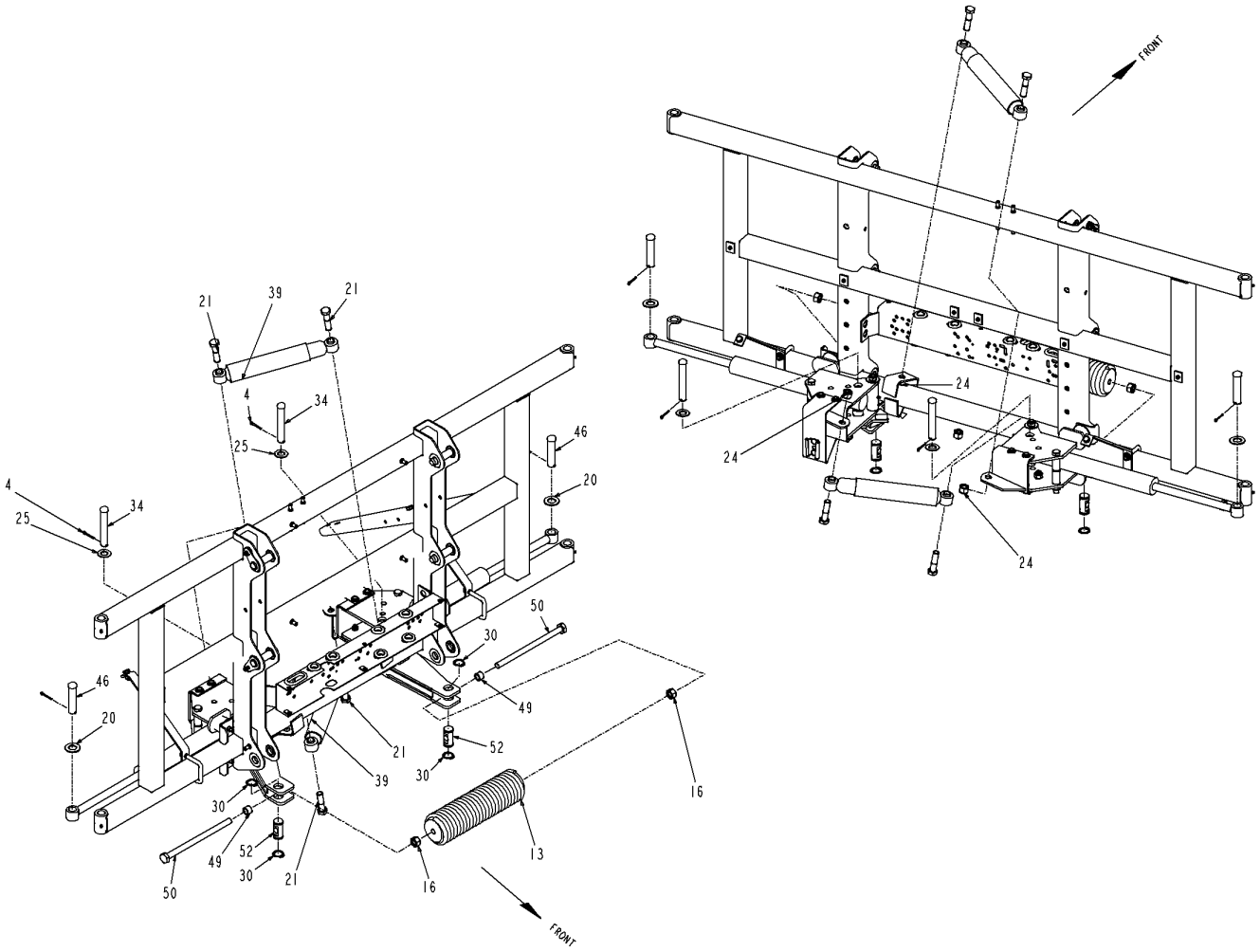

WR37810-15-N657-02.TIF

Copyright © 2007 AGCO Corporation

REAR ""H"" FRAME GROUP

ITEM	PART #	QTY	DESCRIPTION	COMMENTS
4	WR55083	2	PIN-COTTER,3/16 X 1 1/2	
13	WR121622	1	SPRING, ASSY	
16	AG522718	2	NUT-.75-10,G8,ZN,H	
20	AG551856	-	WASHER 1.00 FL ZN SAE TYPE-A	
21	AG553689	4	BOLT 0.75-10NCX 3.00 G5 ZN HHD	
24	AG603864	4	NUT 0.75-10NC HEX ZN REG NY	
25	AG606258	2	WASHER 1.75ODX0.93ID G8 ZN	
30	6538287	4	RING-SNAP	
34	6618227	2	PIN-CLEVIS	
39	6623263	2	SHOCK ABSORBER-BOOM	
46	6802711	-	PIN-CLEVIS	
49	6803869	2	SPACER	
50	6804076	2	BOLT-SUSPENSION	
52	WR37580	2	PIN-SPRING PIVOT	

Copyright © 2007 AGCO Corporation

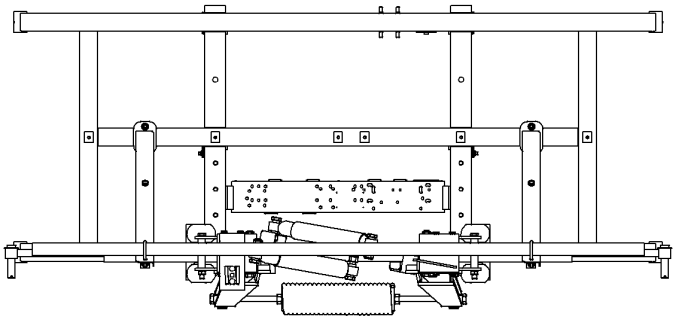

VIEW A - A

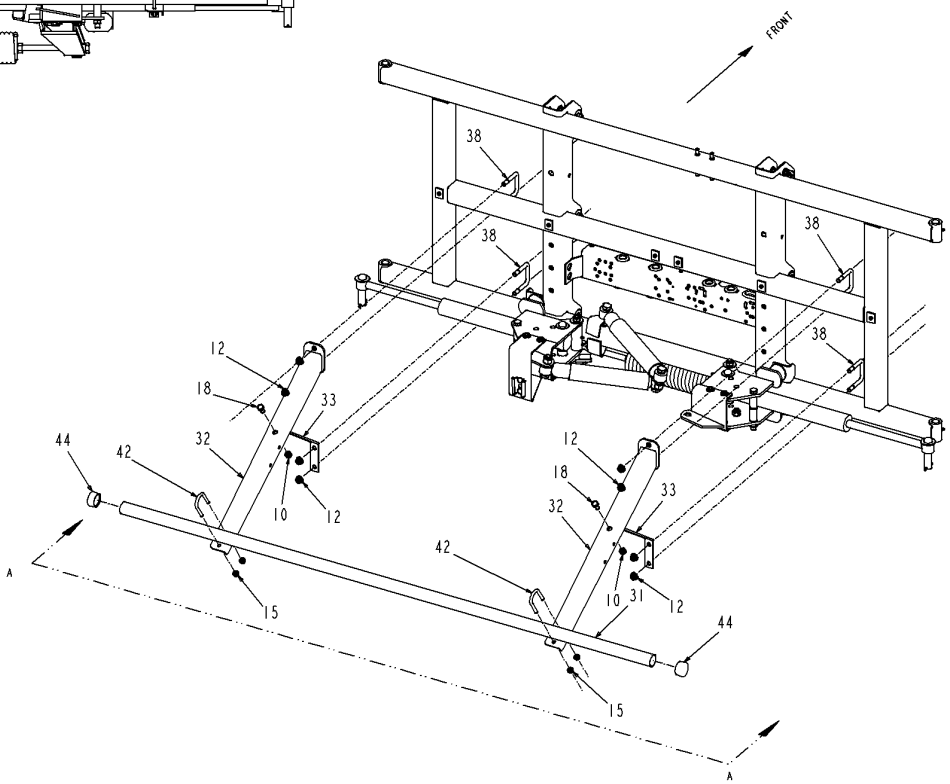

WR37810-15-N657-03.TIF

Copyright © 2007 AGCO Corporation

REAR ""H"" FRAME GROUP

ITEM	PART #	QTY	DESCRIPTION	COMMENTS
10	WR55354	2	NUT-TOPLOCK, 1/2-13UNC G8	
12	WR55372	8	NUT-LOCK FLANGE, 1/2-13NC	
15	AG520885	4	NUT-.38-16,G5,ZN,FLG,H	
18	AG550655	2	BOLT 0.50-13NCX 1.00 G5 ZN HHD	
31	6617585	1	TUBE-BOOM,CNTR	
32	6617765	2	BRACKET-W/A	
33	6617780	2	SUPPORT	
38	6620133	4	U-BOLT SQUARE,1/2 NC	
42	6626119	2	U-BOLT	
44	6659910	2	CAP	

Copyright © 2007 AGCO Corporation

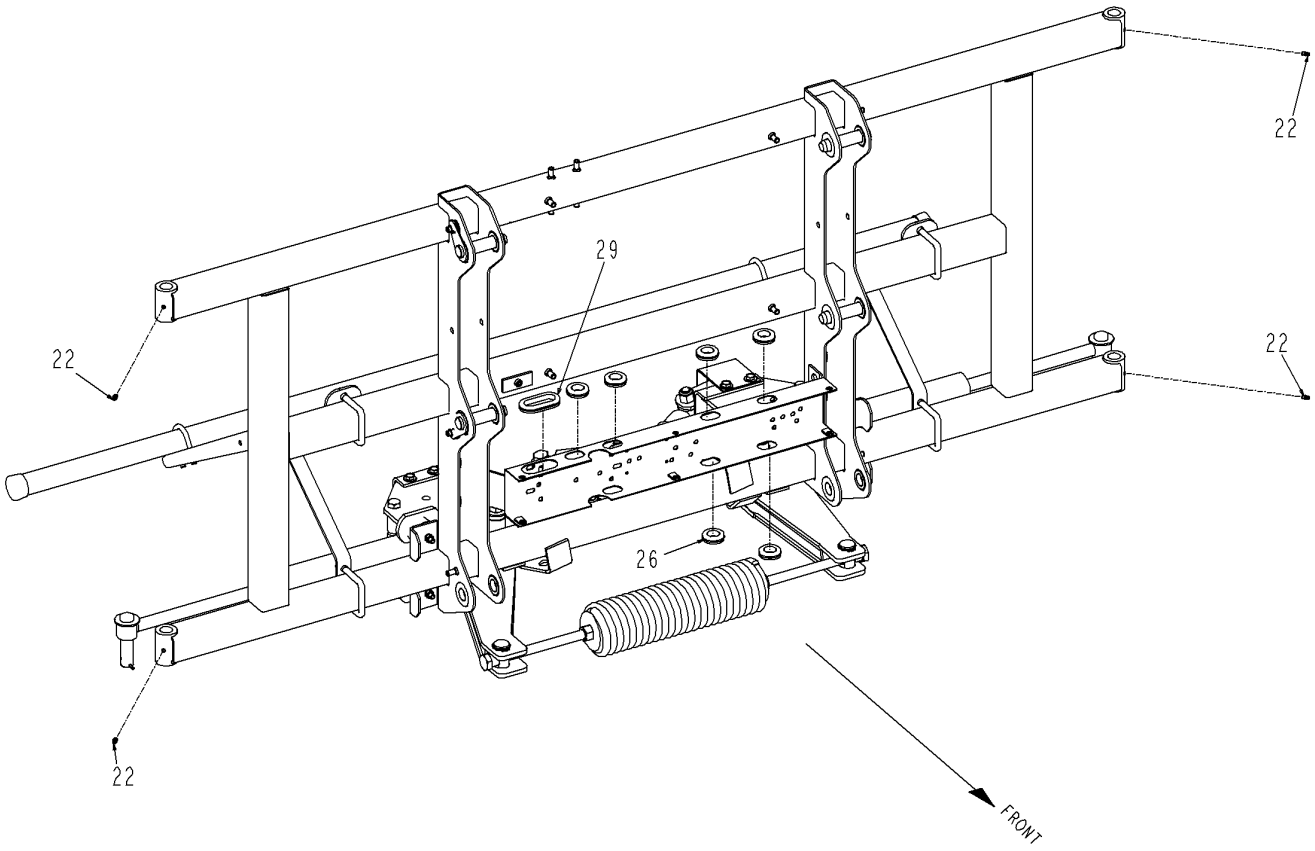

WR37810-15-N657-04.TIF

Copyright © 2007 AGCO Corporation

REAR ""H"" FRAME GROUP

ITEM	PART #	QTY	DESCRIPTION	COMMENTS
22	AG561892	6	FITTING LUBE STR 0.25UNF	
26	WR731972	6	GROMMET	
29	6533975	1	GROMMET	

Copyright © 2007 AGCO Corporation

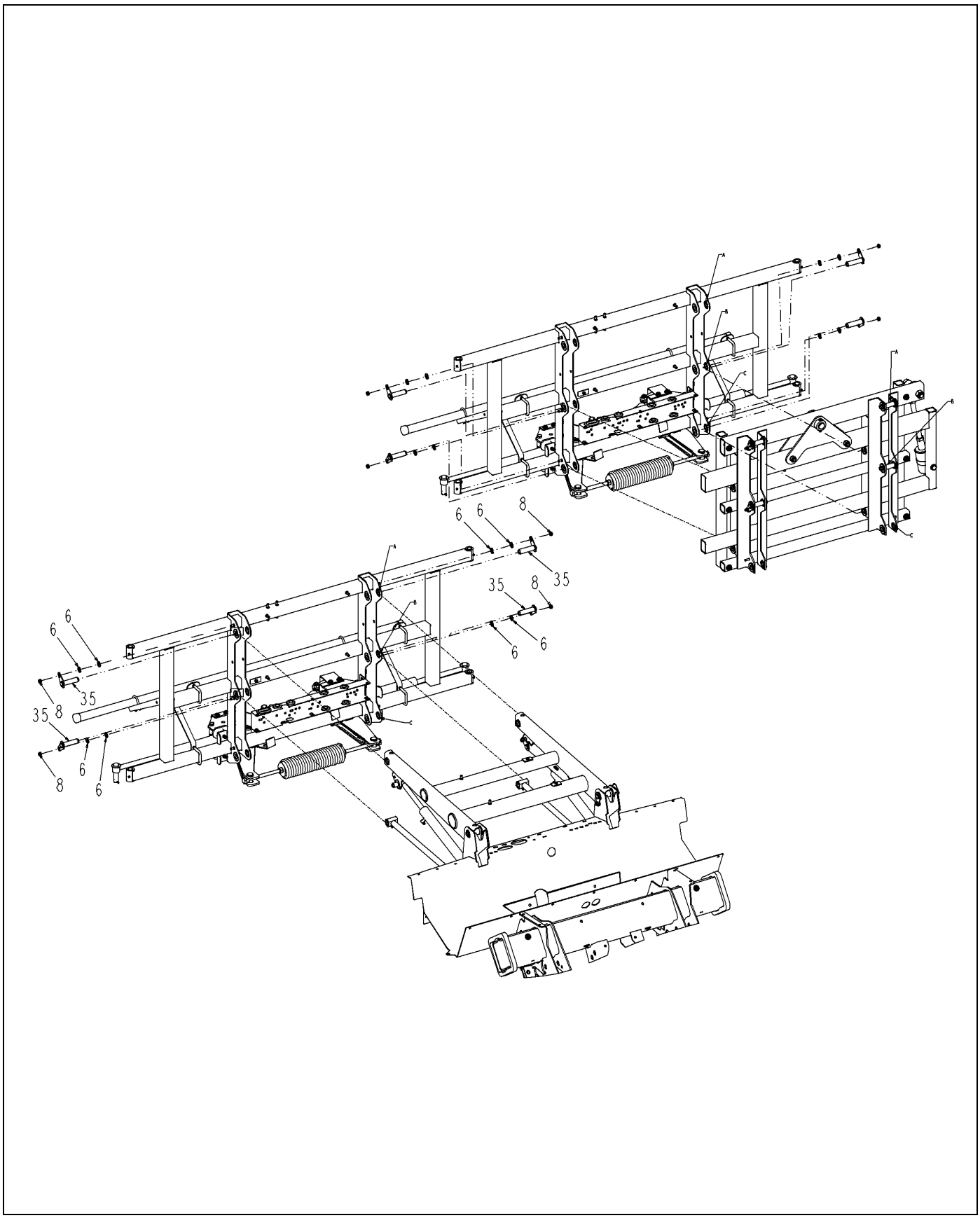

WR37810-15-N657-05.TIF

Copyright © 2007 AGCO Corporation

REAR ""H"" FRAME GROUP

ITEM	PART #	QTY	DESCRIPTION	COMMENTS
6	WR55158	8	WASHER-FLAT,10MM ID,	
8	WR55272	12	NUT-LOCK,M10 X 1.5,PREV	
35	6618836	4	PIN-W/A	

Copyright © 2007 AGCO Corporation

SPRAY SYSTEM INSTL-4000AT CHAS	19-1
SPRAY SYSTEM INSTL-4000AT CHAS	19-2
SPRAY SYSTEM INSTL-4000AT CHAS	19-3
STRAINER-MANIFOLD	19-4
VALVE ASSY R/B 426406	19-5
SPRAY INSTL - H FRM	19-6
5 SECTION VALVE-BOOM SHUT OFF	19-7
VALVE ASM-2.00SP FLG X ORING	19-8
SPRAY SYSTEM INSTAL-H FRM	19-9
3 SECTION VALVE-BOOM SHUT OFF	19-10
SPRAY INSTL-LOOSE PARTS KIT	19-11
MANF INSTL-CTR,SC6080,4XXX	19-12
VLV ASM-5 SECT,BM SHUT OFF	19-13
INSERT ASSY-SQ END	19-14
AGITATOR-AANDM	19-15
VALVE ASSY-INLET	19-16
VALVE-BALL,2 IN FP,W/CAM	19-17
SPRAY INSTL-60 FT MANIFOLD	19-18
SPRAY INSTL-60 FT MANIFOLD	19-19
NOZZLE ASM-SINGLE	19-20
NOZZLE ASM-DOUBLE	19-21
SPRAY INSTL-80 FT MANIFOLD	19-22
SPRAY INSTL-80 FT MANIFOLD	19-23
SPRAY INSTL-80 FT MANIFOLD	19-24
OPT-PP PLMB,SC6080X5X20,OFF	19-25
PIPE ASM-90D W/.75HB,6X20.PP	19-26
PIPE ASM-T W/2 1.00HB,5X20,PP	19-27
PIPE ASM-T W/2 1.00HB,3X20,PP	19-28
PIPE ASM-90D W/1.00HB,2X20,PP	19-29
PIPE ASM-90D W/ .75HB,6X20,PP	19-30
BRKT ASM-L,.75 STAUFF,STD	19-31
BRKT ASM-Z,SH,.75IPS,STD	19-32
BRKT ASM-L/LG STR,.75PP,2PCLP	19-33
BRKT ASM-L,.75 STAUFF,PCLP,STD	19-34
BRKT ASM-Z,LG,.75/1.00IPS,PCLP	19-35
BRKT ASM-L,.75 STAUFF,REV PCLP	19-36
BRKT ASM-Z,LG,.75/1.00IPS,1.0U	19-37
BRKT ASM-Z,SH,.75IPS,1.00U	19-38
BRKT ASM-L,.75 STAUFF,1.00U	19-39
MENDER ASM-HOSE,.75X1.00,PP	19-40
SPRAY INSTL-CTR MANIFOLD	19-41
OPT-PP PLMB,SC6080X5X10,ON	19-42
PIPE ASM-90D W/ .75HB,11X10,PP	19-43
PIPE ASM-T W/2 1.00HB,10X10,PP	19-44
PIPE ASM-T W/2 1.00HB, 6X10,PP	19-45
PIPE ASM-90D W/1.00HB, 5X10,PP	19-46
PIPE ASM-90D W/.75HB,11X10,PP	19-47
OPT-NOZZLE,3WAY,RTRY,80X10,0N	19-48
BODY-NOZZLE,3 WAY,RTRY,.75	19-49
OPT-NOZZLE,3WAY,RTRY,80X20,OFF	19-50
PUMP ASM- SPRAY W/CLUTCH	19-51
PUMP-SPRAY	19-52
FILTER ASSY-BOOM	19-53

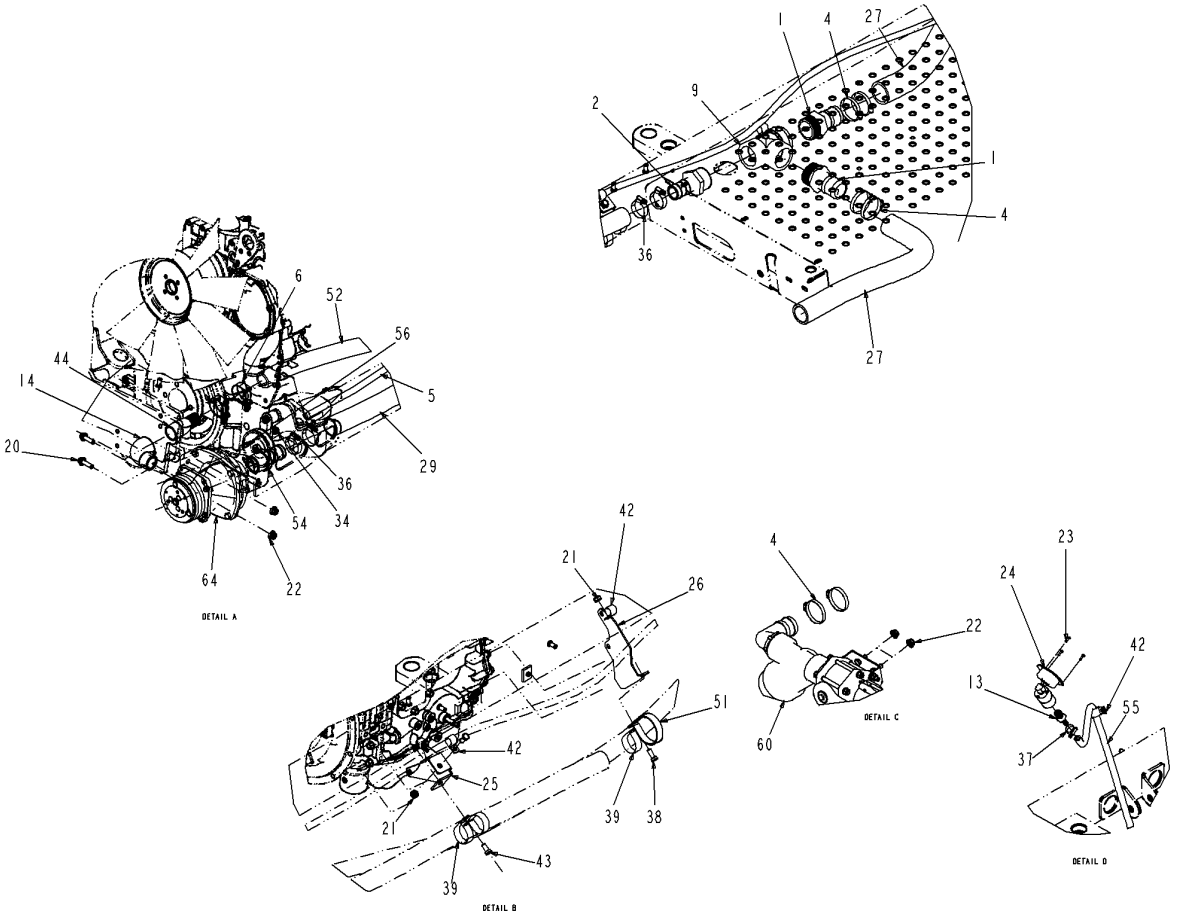

520666D1-01-R505-01.TIF

Copyright © 2007 AGCO Corporation

ITEM	PART #	QTY	DESCRIPTION	COMMENTS
1	AG000767	3	BARB-HOSE,2.00MNPTX2.00BARB,PP	
2	AG000769	1	BARB-HOSE,2.00MNPTX1.50BARB,PP	
4	WR10857	8	CLAMP-HOSE,2 1/2 SST,	
5	WR26241	-	HOSE-1/4 SOLUTION EPDM [BULK: 8.334 FT]	
6	WR32739	7	CLAMP-HOSE,T BOLT,1 3/4	
9	AG050274	1	TEE,PIPE,2.00FNPT,PP	
13	AG051174	1	BARB-HOSE,0.37MNPTX0.37BARB,PP	
14	AG051926	1	ELBOW STR 1.25 90D 304SS	
20	WR55217	2	SCREW-HEX FLG,M10X1.5Z35 CL8.8	
21	WR55272	6	NUT-LOCK,M10 X 1.5,PREV	
22	WR55301	8	NUT-FLANGE,M10 X 1.5,PREV	
23	WR55323	3	SCREW-TAP PAN,#6-20 X 1/2	
24	WR128882	1	GAUGE-SPRAY PRESSURE	
25	WR129454	1	BRACKET-HOSE	
26	WR129840	1	BRACKET-REAR, HOSE	
27	AG511722	-	HOSE-2.00,WIRE BRAID,EPDM [BULK: 8.175 FT]	
29	AG513466	-	HOSE-1.50,LIQ PROD.SUC & DIS [BULK: 3.517 FT]	
31	AG519861	AR	PROTECTOR HOSE 6.00 IN EPHA	
34	AG561025	2	CLAMP HOSE .218 TO .625 U5S	
36	AG561231	4	CLAMP 1.06-2.00 HOSE 24HS	
37	AG561366	1	CLAMP 0.25-0.87 HOSE #6 NARROW	
38	AG561683	3	BOLT M10-1.5 X 25MM G8.8 ZN HH	
39	AG561793	4	CLAMP-HOSE,2,.75 WIDE,RUB-COAT	
42	AG562237	9	CLAMP CTD 0.75IDX0.75WIDE	
43	AG562463	4	BOLT M10-1.50X 20MM G8.8 ZN HH	
44	AG603678	4	NIPPLE 1.25 X 1.25KING ST(P)	
51	6648451	1	CLAMP-CUSHION, 3.0	
52	6649519	-	HOSE-XPLE,150 PSI, 1-1/4 [BULK: 18.667 FT]	
54	6661222	1	HOSE BARB 1.5MPT X 1.5 HB SS	
55	6664407	-	HOSE-BULK, 3/8 IN [BULK: 23.950 FT]	
56	6667188	1	FITTING	
57	6801992	1	STRAP ASSY-TANK	
60	6802436	1	VALVE ASSY-INLET	[A] SEE PAGE 19-16
64	515284D1	1	PUMP ASM- SPRAY W/CLUTCH	[B] SEE PAGE 19-51
	FOOTNOTE [A]		USE REPAIR KIT WR51213 TO SERVICE BALL VALVE	
	FOOTNOTE [B]		EFF S/N S4455ENS8A1079, S4455LNS8A1080, S4655JNS8A1103, S4655KNS8A1102, S4655HNS8M1032, S4655ENS8M1033	

Copyright © 2007 AGCO Corporation

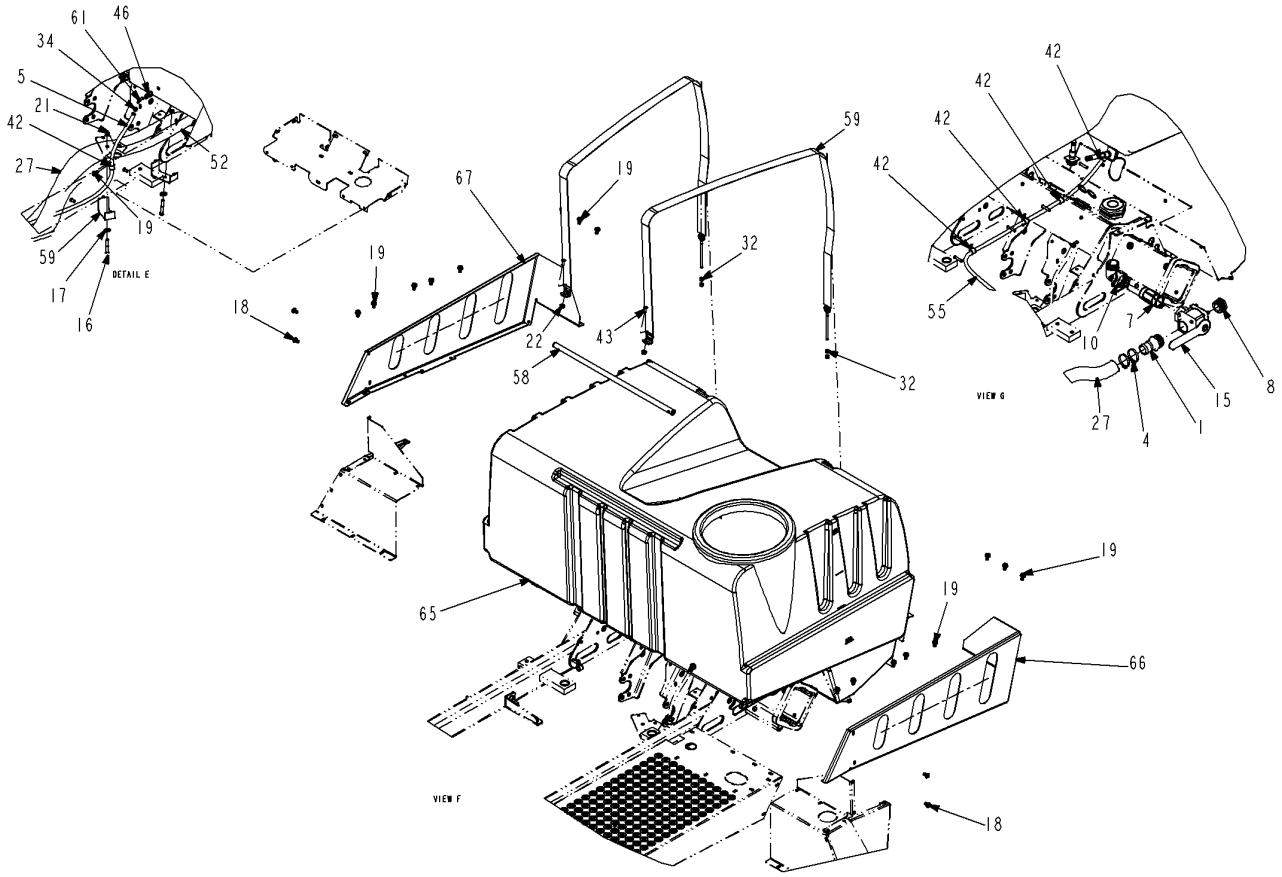

520666D1-01-R505-02.TIF

Copyright © 2007 AGCO Corporation

ITEM	PART #	QTY	DESCRIPTION	COMMENTS
1	AG000767	3	BARB-HOSE,2.00MNPTX2.00BARB,PP	
4	WR10857	8	CLAMP-HOSE,2 1/2 SST,	
5	WR26241	-	HOSE-1/4 SOLUTION EPDM [BULK: 8.334 FT]	
7	AG050255	1	NIPPLE-PIPE,2.00NPTX4.00,PP	
8	AG050268	1	PLUG-PIPE,HEX,2.00NPT,PP	
10	AG050689	1	ELBOW-PIPE,2.00STREET,90D,PP	
15	AG053041	1	VALVE 3-WAY 2.00 BOTTOM LOAD	
16	WR55052	2	SCREW-CAP HEX M10 X 80	
17	WR55158	2	WASHER-FLAT,10MM ID,	
18	WR55188	4	SCREW-CAP HEX M8 X 13,	
19	WR55191	17	HEX HEAD,THREAD ROLLING SCREW	
21	WR55272	6	NUT-LOCK,M10 X 1.5,PREV	
22	WR55301	8	NUT-FLANGE,M10 X 1.5,PREV	
27	AG511722	-	HOSE-2.00,WIRE BRAID,EPDM [BULK: 8.175 FT]	
32	AG523259	4	NUT-.37-16,G8,ZN,H	
34	AG561025	2	CLAMP HOSE .218 TO .625 U5S	
42	AG562237	9	CLAMP CTD 0.75IDX0.75WIDE	
43	AG562463	4	BOLT M10-1.50X 20MM G8.8 ZN HH	
46	6553411	1	BUSHING	
52	6649519	-	HOSE-XPLE,150 PSI, 1-1/4 [BULK: 18.667 FT]	
55	6664407	-	HOSE-BULK, 3/8 IN [BULK: 23.950 FT]	
58	6802428	1	TUBE	
59	6802429	2	CLAMP	
61	401494X1	1	ELBOW-BARBED,BLACK ACETAL	
65	518574D1	1	TANK ASM,SPRAY	SEE PAGE 16-1
66	519234D1	1	BRACE-LH	
67	519235D1	1	BRACE-RH	

Copyright © 2007 AGCO Corporation

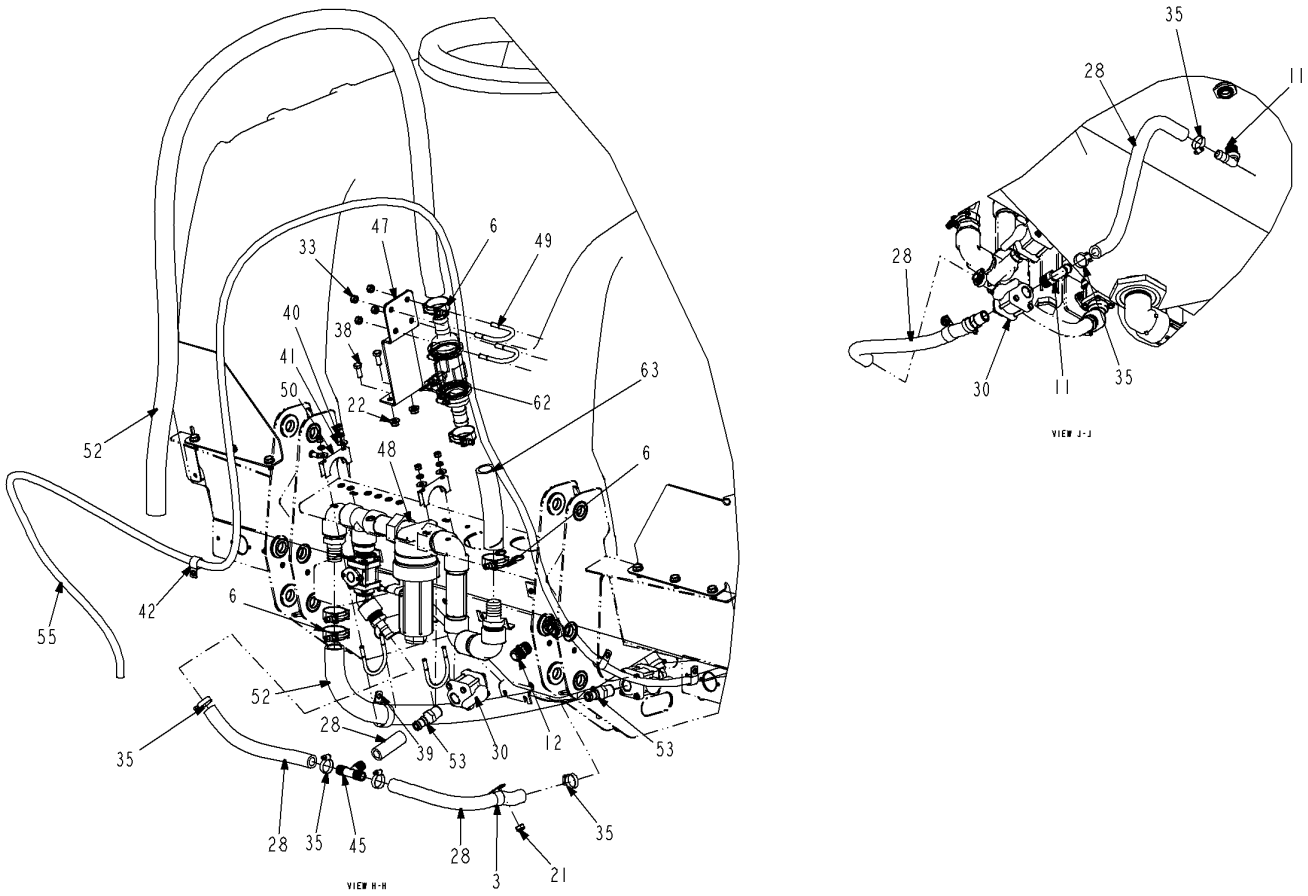

520666D1-01-R505-03.TIF

Copyright © 2007 AGCO Corporation

ITEM	PART #	QTY	DESCRIPTION	COMMENTS
3	AG010359	1	CLAMP LOOM 1.25 PER DWG	
6	WR32739	7	CLAMP-HOSE,T BOLT,1 3/4	
11	AG051142	2	ELBOW 90D 0.75NPTX0.75 BARB PP	
12	AG051151	1	NIPPLE-PIPE,0.75NPTXCLS,PP	
21	WR55272	6	NUT-LOCK,M10 X 1.5,PREV	
22	WR55301	8	NUT-FLANGE,M10 X 1.5,PREV	
28	AG513385	-	HOSE,MED.PRESS 0.75 2BRD EPDM [BULK: 5.025 FT]	
30	AG513724	2	VLV BALL 0.75 POLY FF	
33	AG550825	4	NUT 0.37-16NC HEX ZN REG	
35	AG561229	6	CLAMP 0.68-1.25 HOSE 12HS	
38	AG561683	3	BOLT M10-1.5 X 25MM G8.8 ZN HH	
39	AG561793	4	CLAMP-HOSE,2,.75 WIDE,RUB-COAT	
40	AG562051	4	WASHER 0.31 LK SS REG	
41	AG562074	4	WASHER 0.31 FL SS REG TYPE-B	
42	AG562237	9	CLAMP CTD 0.75IDX0.75WIDE	
45	6511103	1	TEE	
47	6595684	1	BRACKET-FLOWMETER	
48	6596121	1	STRAINER-MANIFOLD	SEE PAGE 19-4
49	6626119	2	U-BOLT	
50	6626631	2	CLAMP-FULL CIRCLE	
52	6649519	-	HOSE-XPLE,150 PSI, 1-1/4 [BULK: 18.667 FT]	
53	6660899	2	ADAPTER-12HB/-12MP,PP	
55	6664407	-	HOSE-BULK, 3/8 IN [BULK: 23.950 FT]	
62	504212D1	1	FLWMTR KIT-2.00SP FLG, RFM60P	SEE PAGE 20-12
63	507301D1	1	HOSE-XLP,1.25 ID X 7.00 200PSI	

Copyright © 2007 AGCO Corporation

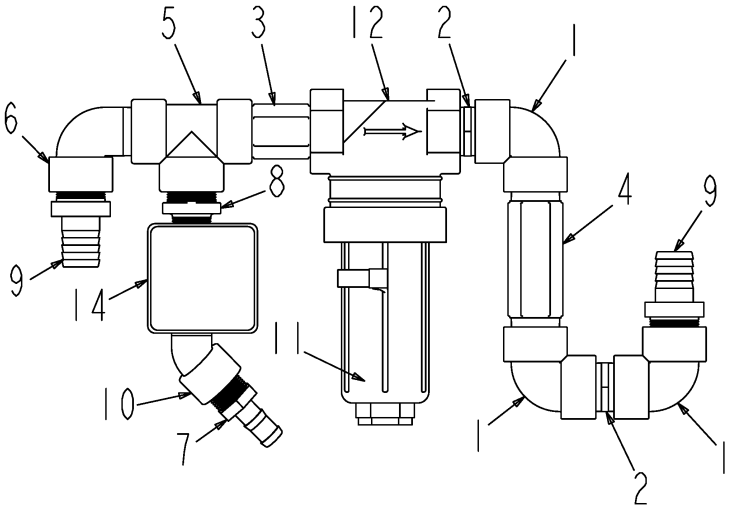

6596121-06-N892-.TIF

Copyright © 2007 AGCO Corporation

STRAINER-MANIFOLD

ITEM	PART #	QTY	DESCRIPTION	COMMENTS
1	AG051128	3	ELBOW-PIPE,1.25FNPT,90D,PP	
2	AG051157	2	NIPPLE-PIPE,1.25NPTXCLS,PP	
3	AG051158	1	NIPPLE-PIPE,1.25NPTX4.00,PP	
4	AG051159	1	NIPPLE-PIPE,1.25NPTX6.00,PP	
5	AG051162	1	TEE,PIPE,1.25FNPT,PP	
6	AG051165	1	ELBOW-PIPE,1.25STREET,90D,PP	
7	AG051182	1	BARB-HOSE,1.00MNPTX0.75BARB,PP	
8	AG051437	-	NIPPLE RED 1.25NPTX1.00NPT PP	
9	AG052116	2	ADAPTER .20MP X -20HB SS	
10	AG052342	1	POLY ST ELBOW 45D 1 IN	
11	AG052373	1	SCREEN 50 MESH	
12	AG053056	1	STRAINER ASM LESS SCREEN 1.25	
13	AG129187	AR	PIPE SEALANT-FLEX BLACK	
14	6618341	1	VALVE ASSY R/B 426406	SEE PAGE 19-5

Copyright © 2007 AGCO Corporation

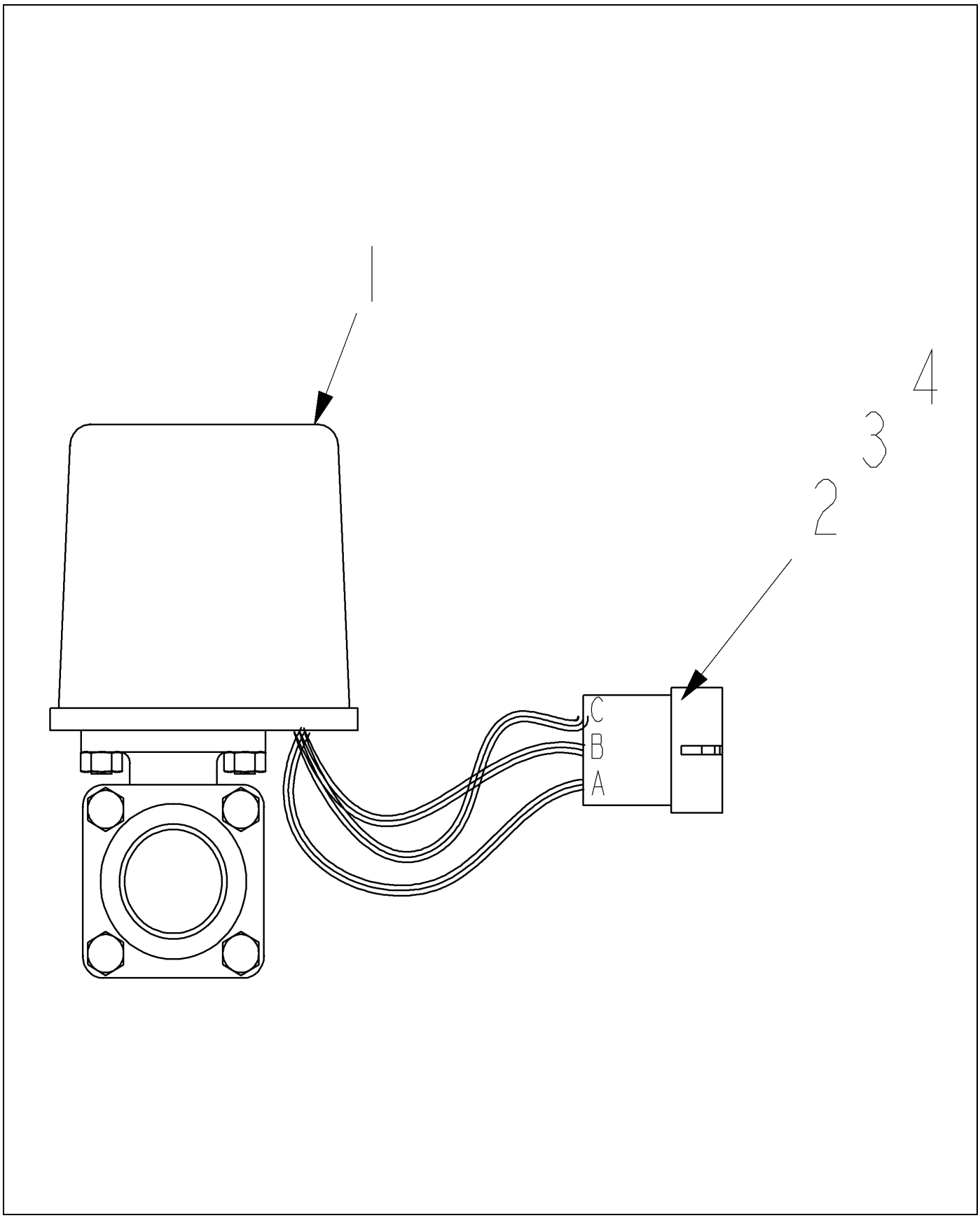

6618341-B-L942-.TIF

Copyright © 2007 AGCO Corporation

VALVE ASSY R/B 426406

ITEM	PART #	QTY	DESCRIPTION	COMMENTS
1	6656413	1	VALVE R/B 056871	
2	AG515765	3	SEAL CABLE GREY REEL 14 GA	
3	AG515917	1	CONNECTOR ELEC SHROUD 3-CONT F	
4	AG515762	3	TERM MA 16-14 GA W/PACK	

Copyright © 2007 AGCO Corporation

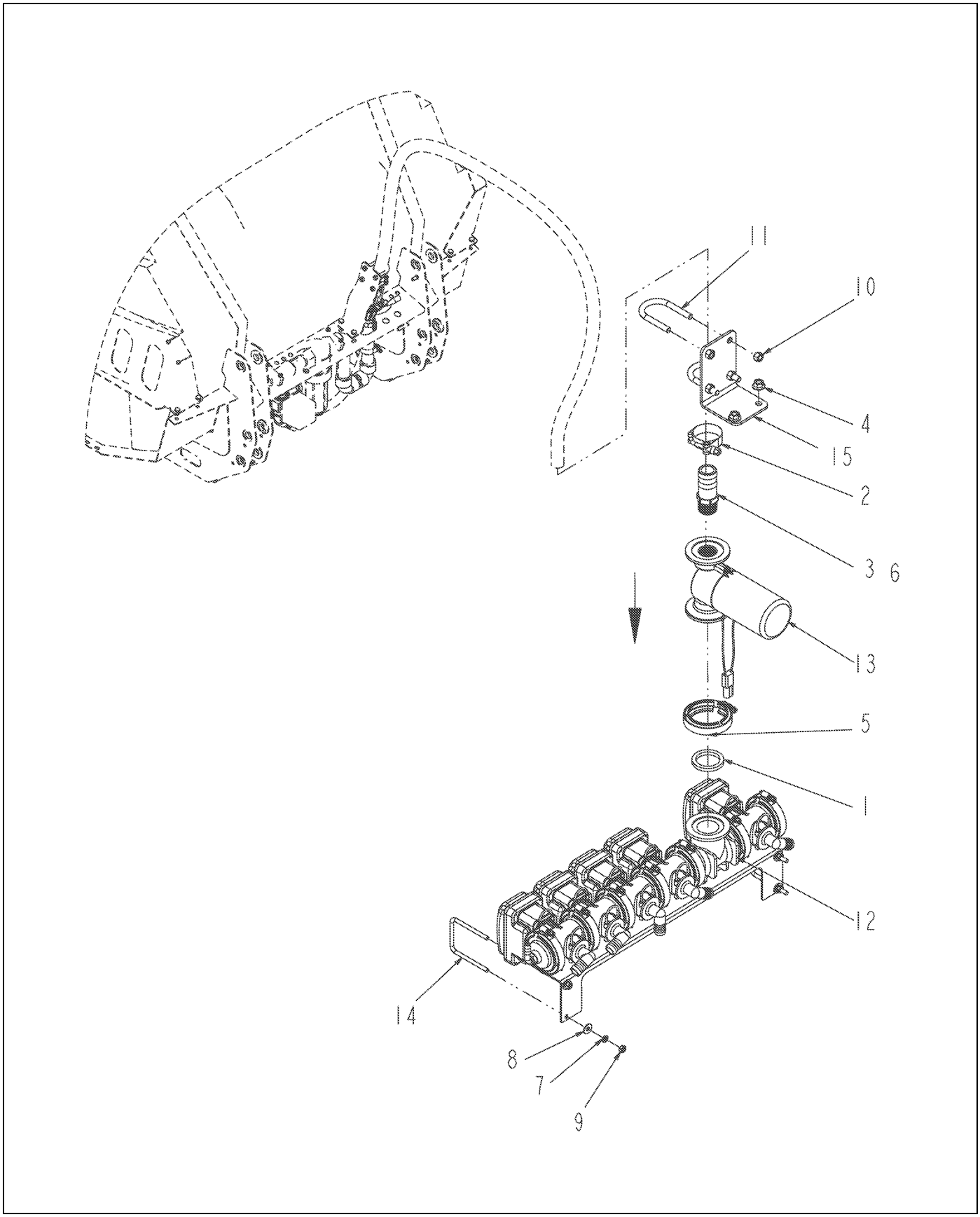

123568-06-N569-.TIF

Copyright © 2007 AGCO Corporation

ITEM	PART #	QTY	DESCRIPTION	COMMENTS
1	AG000772	1	GASKET 1.50 EPDM	
2	WR32739	1	CLAMP-HOSE,T BOLT,1 3/4	
3	AG051183	1	BARB-HOSE,1.00MNPTX1.25BARB,PP	
4	WR55301	2	NUT-FLANGE,M10 X 1.5,PREV	
5	AG056785	1	CLAMP 2.00 FLANGE	
6	AG129187	AR	PIPE SEALANT-FLEX BLACK	
7	AG550493	4	WASHER 0.25 LK ZN REG	
8	AG550507	4	WASHER 0.25 FL ZN REG TYPE-B	
9	AG550612	4	NUT 0.25-20NC HEX ZN REG	
10	AG601411	4	NUT 0.37-16NC HEX ZN REG NY	
11	6626119	2	U-BOLT	
12	504214D1	2	5 SECTION VALVE-BOOM SHUT OFF	SEE PAGE 19-7
13	512505D1	1	VALVE-CTRL,1.00NPT/2.00SP FLG	[A]
14	WR55582	2	U-BOLT,DRAWBAR	
15	WR55859	1	MOUNT-HOSE	
	FOOTNOTE [A]		ITEMS 3, 5, 7, 9 AND 11 CANNOT BE PURCHASED INDIVIDUALLY BUT ARE INCLUDED IN THE KIT.	

Copyright © 2007 AGCO Corporation

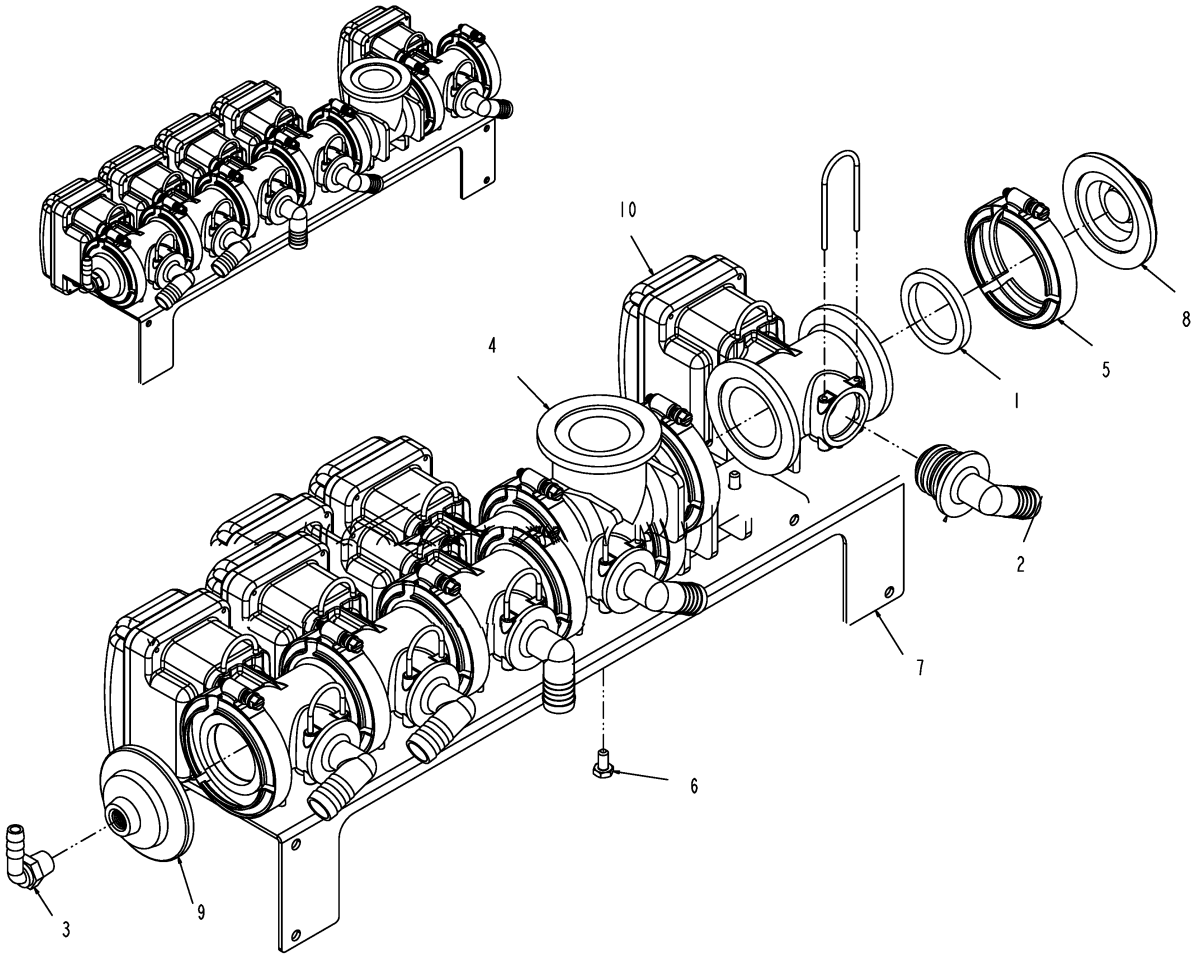

504214D1-01-M767-.TIF

Copyright © 2007 AGCO Corporation

5 SECTION VALVE-BOOM SHUT OFF

ITEM	PART #	QTY	DESCRIPTION	COMMENTS
1	AG000772	7	GASKET 1.50 EPDM	
2	WR34501	5	ELBOW-90,-12HB	
3	AG051137	1	ELBOW 90D 0.38NPTX0.38BARB PP	
4	AG056287	1	FITTING 2.00 FLANGED TEE	
5	AG056785	7	CLAMP 2.00 FLANGE	
6	AG562047	10	BOLT 0.25-20NCX 0.50 SS HHD	
7	504239D1	1	BRACKET-MTG,BOOM VALVE,RVN	
8	504341D1	1	PLUG-2.00SP FLG	
9	505391D1	1	PLUG-2.00SP FLG X .38 NPT	
10	505392D1	5	VALVE ASM-2.00SP FLG X ORING	[A] SEE PAGE 19-8
	FOOTNOTE [A]		FOR VALVE OUTLET USE O-RING AG059866.	
	FOOTNOTE [A]		PLUNGER SEAL KIT AG330879	

Copyright © 2007 AGCO Corporation

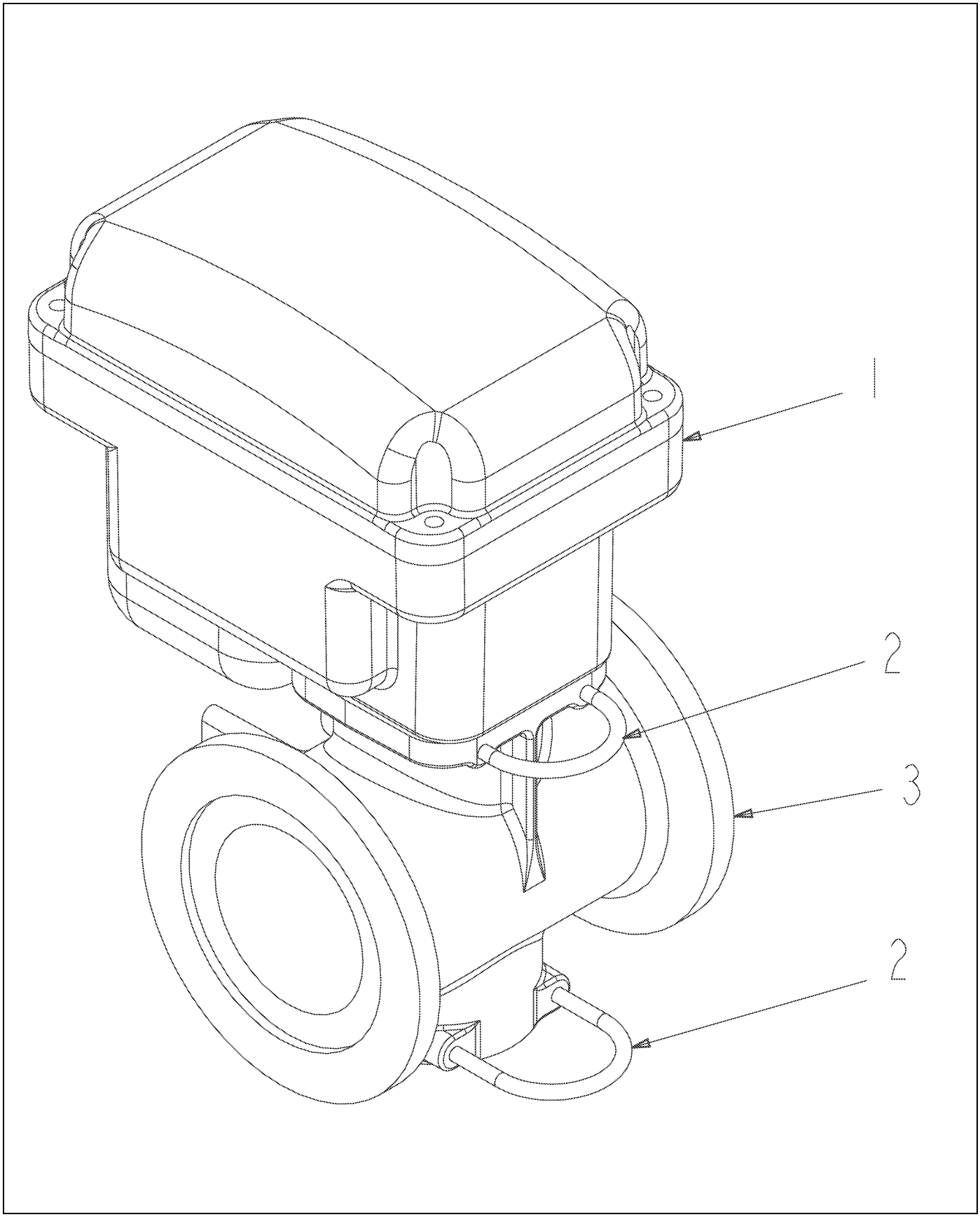

505392D1-02-N854-.TIF

Copyright © 2007 AGCO Corporation

VALVE ASM-2.00SP FLG X ORING

ITEM	PART #	QTY	DESCRIPTION	COMMENTS
REF	AG330879	1	KIT,PLUNGER SEAT	
REF	AG330879	1	KIT,PLUNGER SEAT	
1	504331D1	1	MOTOR ASSEMBLY	
2	504333D1	2	CLIP	
3	504336D1	1	BODY	
	FOOTNOTE		FOR VALVE OUTLET USE O-RING AG059866.	
	FOOTNOTE		PLUNGER SEAL KIT AG330879	

Copyright © 2007 AGCO Corporation

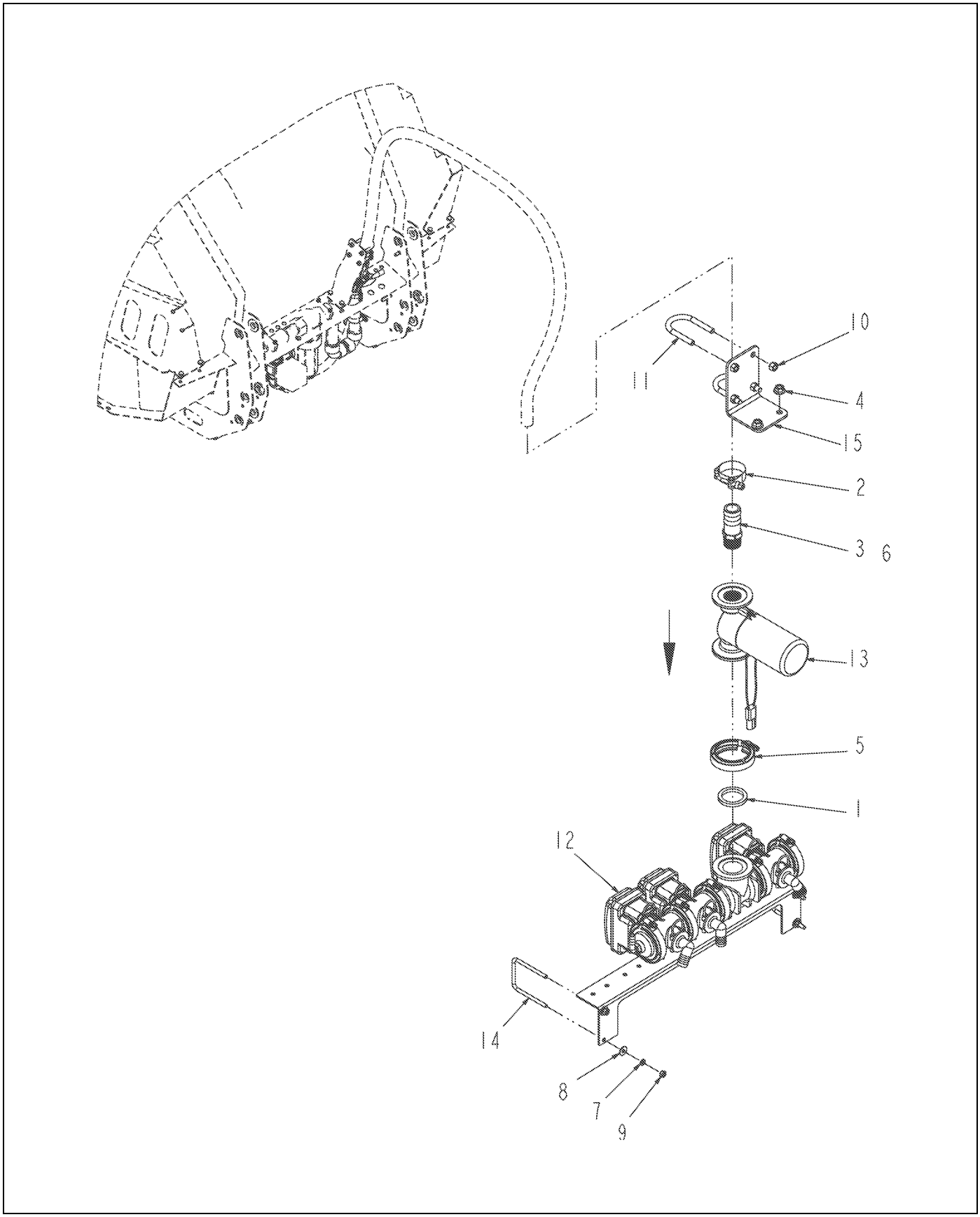

128592-05-N569-.TIF

Copyright © 2007 AGCO Corporation

ITEM	PART #	QTY	DESCRIPTION	COMMENTS
1	AG000772	1	GASKET 1.50 EPDM	
2	WR32739	1	CLAMP-HOSE,T BOLT,1 3/4	
3	AG051183	1	BARB-HOSE,1.00MNPTX1.25BARB,PP	
4	WR55301	2	NUT-FLANGE,M10 X 1.5,PREV	
5	AG056785	1	CLAMP 2.00 FLANGE	
6	AG129187	AR	PIPE SEALANT-FLEX BLACK	
7	AG550493	4	WASHER 0.25 LK ZN REG	
8	AG550507	4	WASHER 0.25 FL ZN REG TYPE-B	
9	AG550612	4	NUT 0.25-20NC HEX ZN REG	
10	AG601411	4	NUT 0.37-16NC HEX ZN REG NY	
11	6626119	2	U-BOLT	
12	504213D1	1	3 SECTION VALVE-BOOM SHUT OFF	SEE PAGE 19-10
13	512505D1	1	VALVE-CTRL,1.00NPT/2.00SP FLG	[A]
14	WR55582	2	U-BOLT,DRAWBAR	
15	WR55859	1	MOUNT-HOSE	
	FOOTNOTE [A]		ITEMS 3, 5, 7, 9 AND 11 CANNOT BE PURCHASED INDIVIDUALLY BUT ARE INCLUDED IN THE KIT.	

Copyright © 2007 AGCO Corporation

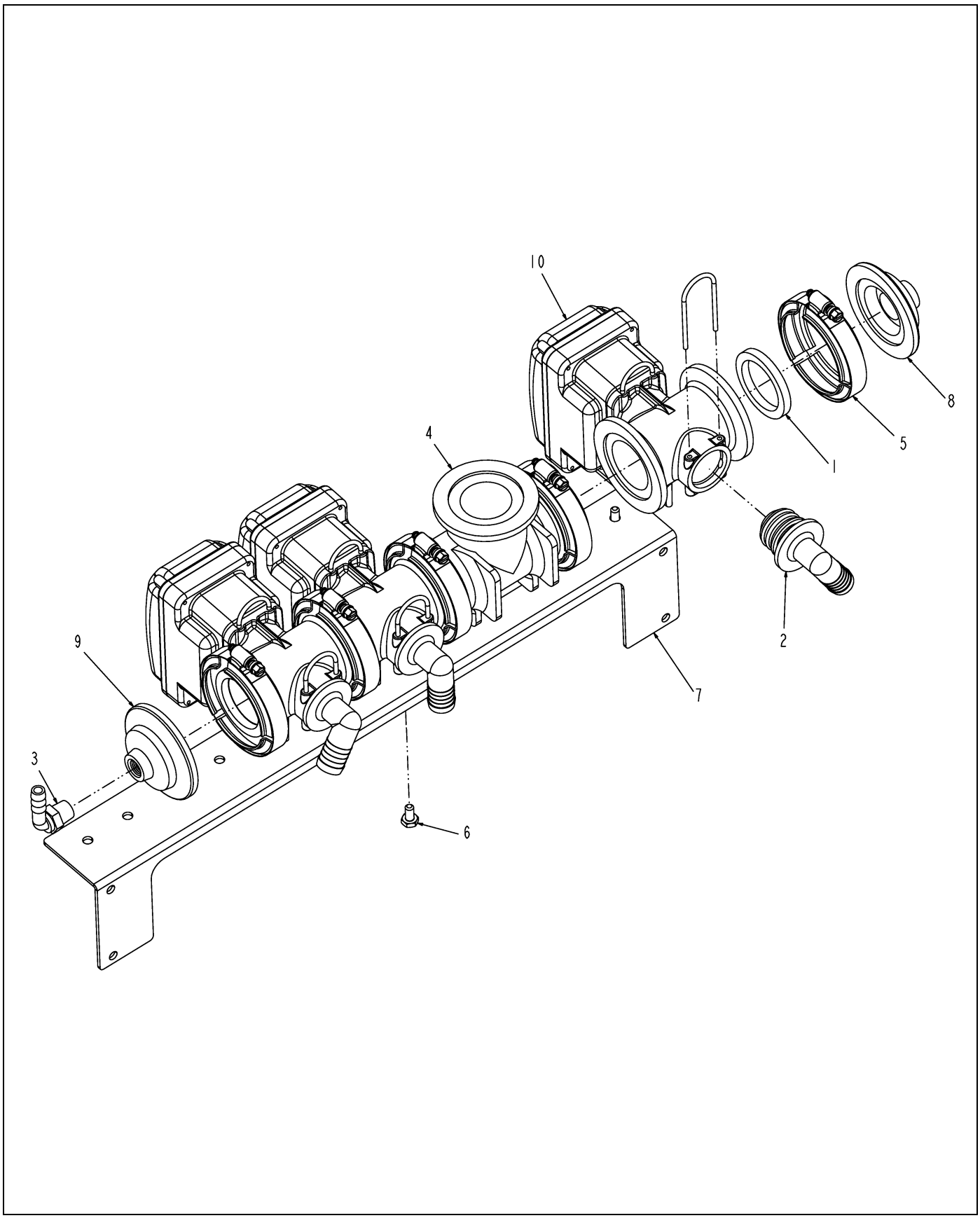

504213D1-01-M767.TIF

Copyright © 2007 AGCO Corporation

3 SECTION VALVE-BOOM SHUT OFF

ITEM	PART #	QTY	DESCRIPTION	COMMENTS
1	AG000772	5	GASKET 1.50 EPDM	
2	WR34501	3	ELBOW-90,-12HB	
3	AG051137	1	ELBOW 90D 0.38NPTX0.38BARB PP	
4	AG056287	1	FITTING 2.00 FLANGED TEE	
5	AG056785	5	CLAMP 2.00 FLANGE	
6	AG562047	6	BOLT 0.25-20NCX 0.50 SS HHD	
7	504239D1	1	BRACKET-MTG,BOOM VALVE,RVN	
8	504341D1	1	PLUG-2.00SP FLG	
9	505391D1	1	PLUG-2.00SP FLG X .38 NPT	
10	505392D1	3	VALVE ASM-2.00SP FLG X ORING	[A] SEE PAGE 19-8
	FOOTNOTE [A]		FOR VALVE OUTLET USE O-RING AG059866.	
	FOOTNOTE [A]		PLUNGER SEAL KIT AG330879	

Copyright © 2007 AGCO Corporation

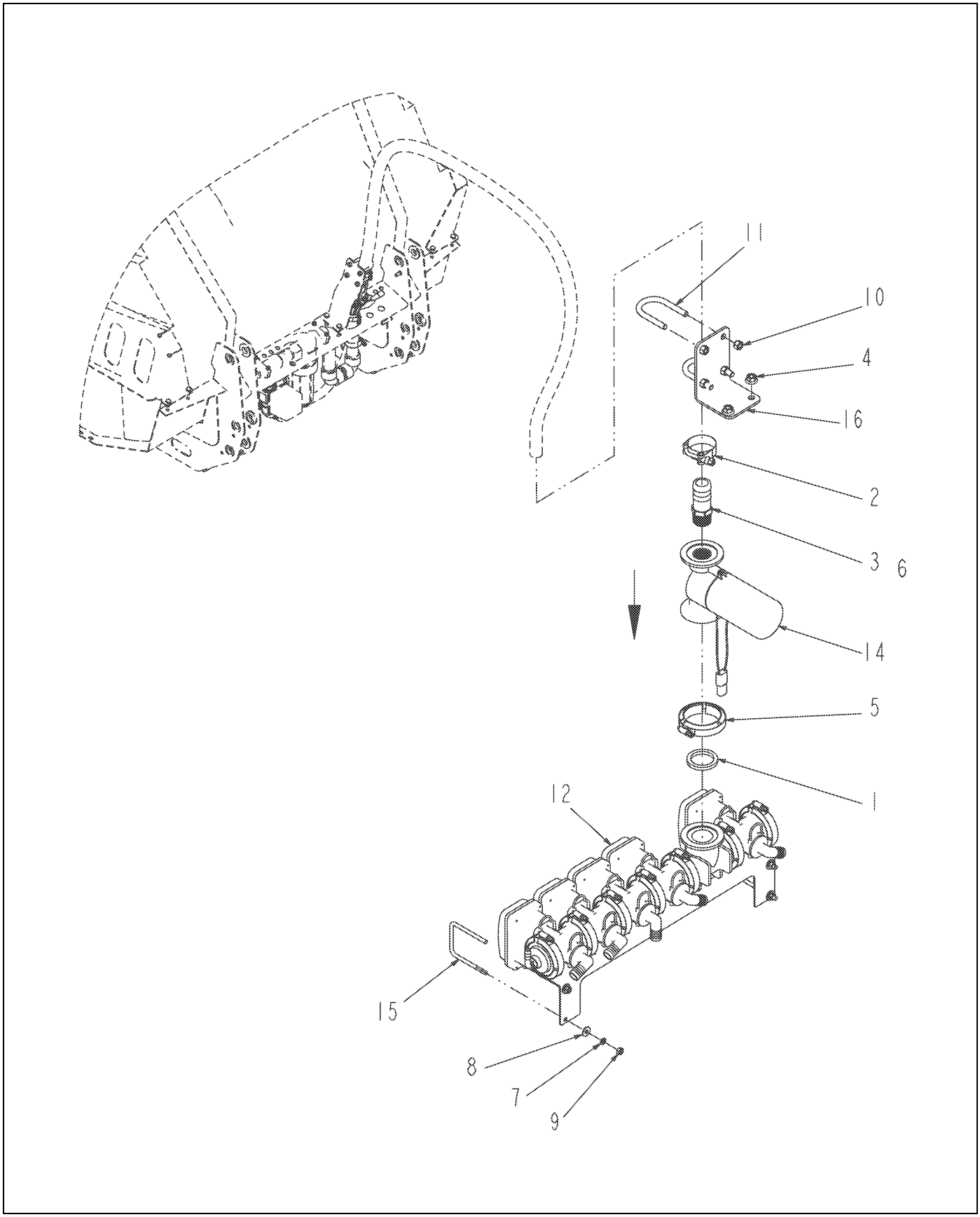

425567-07-N569-.TIF

Copyright © 2007 AGCO Corporation

SPRAY INSTL-LOOSE PARTS KIT

ITEM	PART #	QTY	DESCRIPTION	COMMENTS
1	AG000772	1	GASKET 1.50 EPDM	
2	WR32739	1	CLAMP-HOSE,T BOLT,1 3/4	
3	AG051183	1	BARB-HOSE,1.00MNPTX1.25BARB,PP	
4	WR55301	2	NUT-FLANGE,M10 X 1.5,PREV	
5	AG056785	1	CLAMP 2.00 FLANGE	
6	AG129187	AR	PIPE SEALANT-FLEX BLACK	
7	AG550493	4	WASHER 0.25 LK ZN REG	
8	AG550507	4	WASHER 0.25 FL ZN REG TYPE-B	
9	AG550612	4	NUT 0.25-20NC HEX ZN REG	
10	AG601411	4	NUT 0.37-16NC HEX ZN REG NY	
11	6626119	2	U-BOLT	
12	504214D1	1	5 SECTION VALVE-BOOM SHUT OFF	SEE PAGE 19-7
13	507916D1	1	BAG-SHIPPING	
14	512505D1	1	VALVE-CTRL,1.00NPT/2.00SP FLG	[A]
15	WR55582	2	U-BOLT,DRAWBAR	
16	WR55859	1	MOUNT-HOSE	
	FOOTNOTE [A]		ITEMS 3, 5, 7, 9 AND 11 CANNOT BE PURCHASED INDIVIDUALLY BUT ARE INCLUDED IN THE KIT.	

Copyright © 2007 AGCO Corporation

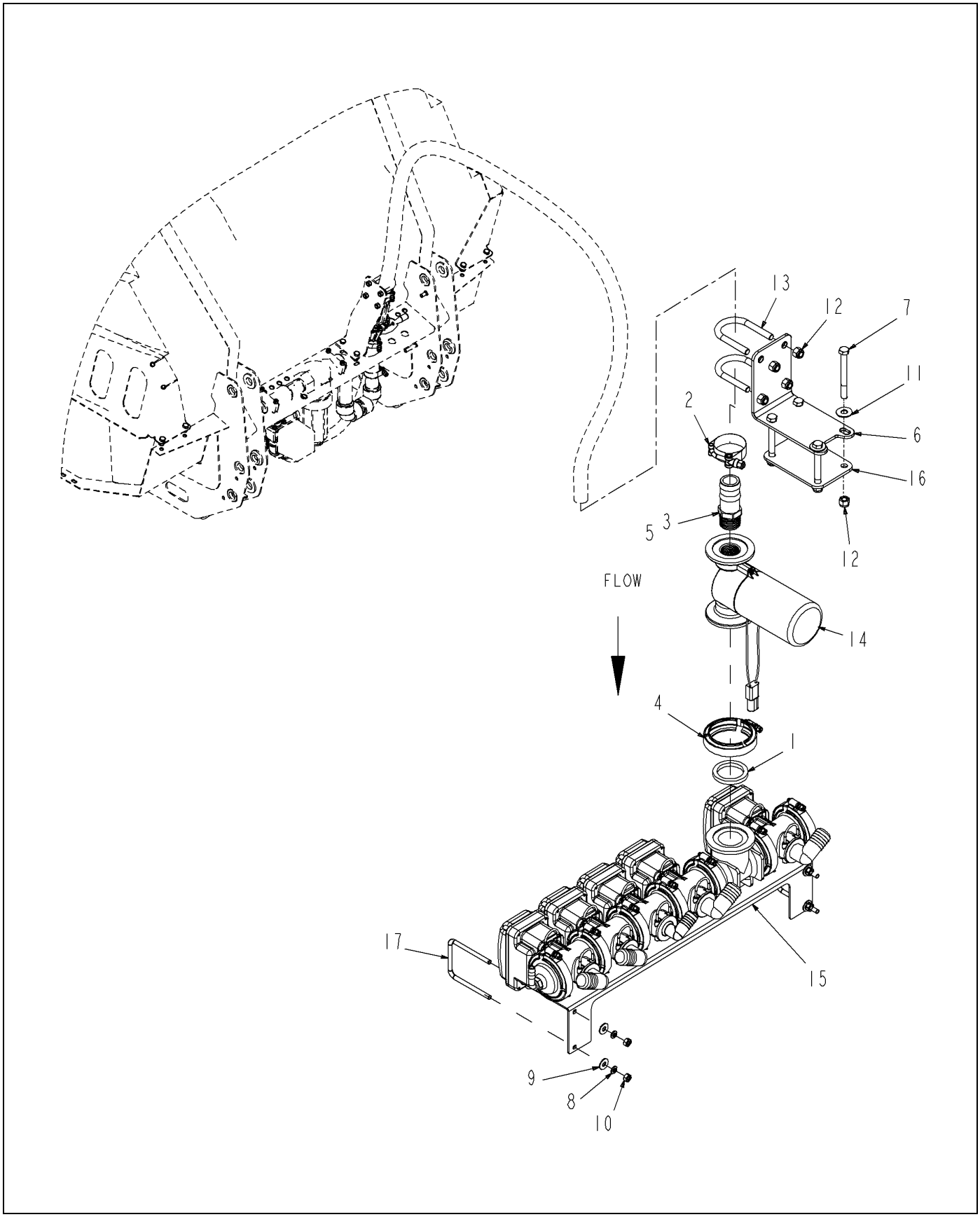

517614D1-02-R532-.TIF

Copyright © 2007 AGCO Corporation

ITEM	PART #	QTY	DESCRIPTION	COMMENTS
1	AG000772	1	GASKET 1.50 EPDM	
2	WR32739	1	CLAMP-HOSE,T BOLT,1 3/4	
3	AG051183	1	BARB-HOSE,1.00MNPTX1.25BARB,PP	
4	AG056785	1	CLAMP 2.00 FLANGE	
5	AG129187	AR	PIPE SEALANT-FLEX BLACK	
6	WR133826	1	BRKT-MTG,HOSE,FEED,MANF,SC6080	
7	AG517292	4	BOLT 0.37-16NCX 3.50 SS HHD	
8	AG550493	4	WASHER 0.25 LK ZN REG	
9	AG550507	4	WASHER 0.25 FL ZN REG TYPE-B	
10	AG550612	4	NUT 0.25-20NC HEX ZN REG	
11	AG551007	2	WASHER 0.37 FL ZN REG TYPE-B	
12	AG601411	8	NUT 0.37-16NC HEX ZN REG NY	
13	6626119	2	U-BOLT	
14	512505D1	1	VALVE-CTRL,1.00NPT/2.00SP FLG	[A]
15	517615D1	1	VLV ASM-5 SECT,BM SHUT OFF	SEE PAGE 19-13
16	520889D1	1	PLATE-MOUNT	
17	WR55582	2	U-BOLT,DRAWBAR	
	FOOTNOTE [A]		ITEMS 3, 5, 7, 9 AND 11 CANNOT BE PURCHASED INDIVIDUALLY BUT ARE INCLUDED IN THE KIT.	
	FOOTNOTE		EFF S/N ..Txx1001	

Copyright © 2007 AGCO Corporation

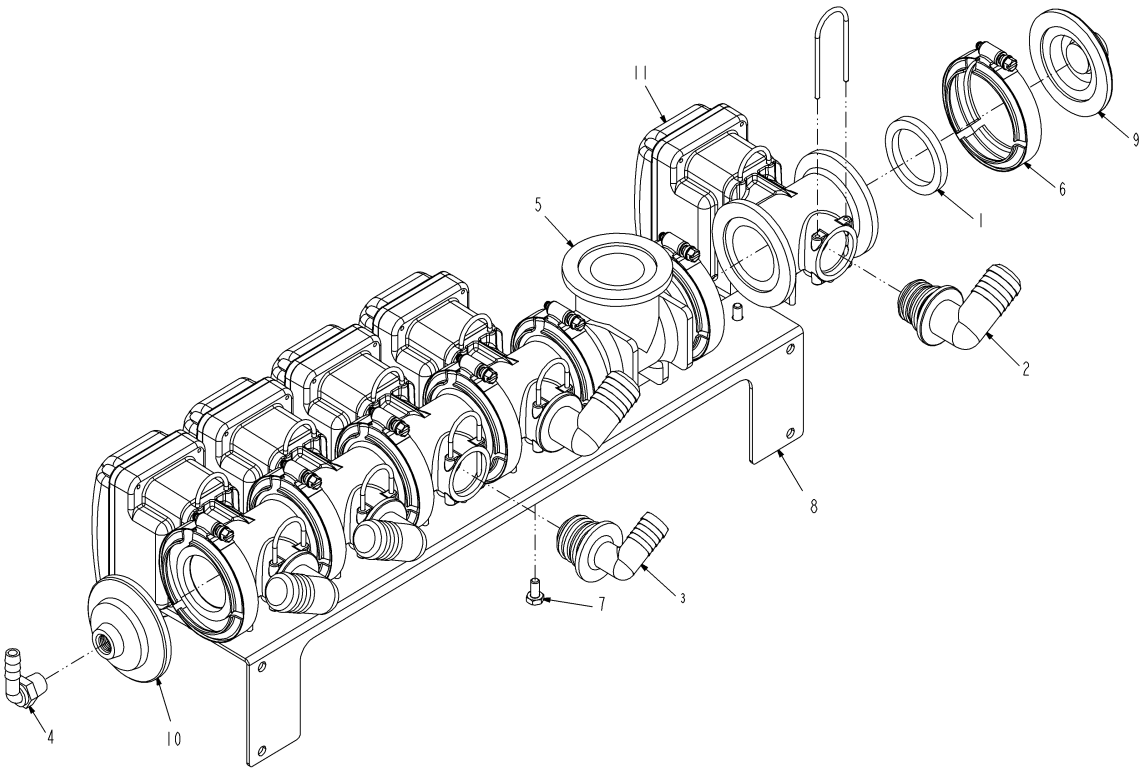

517615D1-01-R132-.TIF

Copyright © 2007 AGCO Corporation

VLV ASM-5 SECT,BM SHUT OFF

ITEM	PART #	QTY	DESCRIPTION	COMMENTS
1	AG000772	7	GASKET 1.50 EPDM	
2	WR34500	4	ELBOW-90,-16HB	
3	WR34501	1	ELBOW-90,-12HB	
4	AG051137	1	ELBOW 90D 0.38NPTX0.38BARB PP	
5	AG056287	1	FITTING 2.00 FLANGED TEE	
6	AG056785	7	CLAMP 2.00 FLANGE	
7	AG562047	10	BOLT 0.25-20NCX 0.50 SS HHD	
8	504239D1	1	BRACKET-MTG,BOOM VALVE,RVN	
9	504341D1	1	PLUG-2.00SP FLG	
10	505391D1	1	PLUG-2.00SP FLG X .38 NPT	
11	505392D1	5	VALVE ASM-2.00SP FLG X ORING	[A] SEE PAGE 19-8
	FOOTNOTE [A]		FOR VALVE OUTLET USE O-RING AG059866.	
	FOOTNOTE [A]		PLUNGER SEAL KIT AG330879	

Copyright © 2007 AGCO Corporation

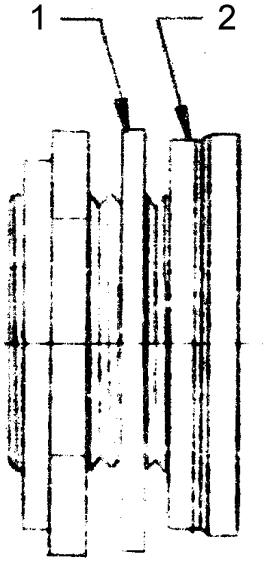

6512905.TIF

Copyright © 2007 AGCO Corporation

INSERT ASSY-SQ END

ITEM	PART #	QTY	DESCRIPTION	COMMENTS
1	6611577	-	WASHER-NYLON-3/4 IN	
2	6611576	-	WASHER-RUBBER,3/4 IN BU	

Copyright © 2007 AGCO Corporation

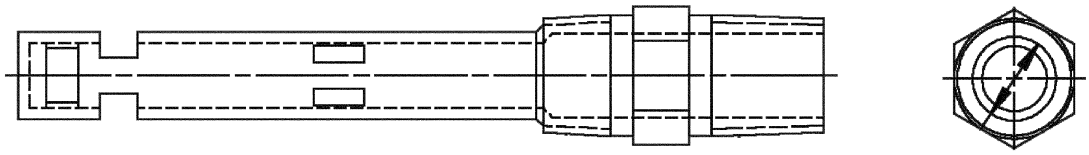

6620467.tif

Copyright © 2007 AGCO Corporation

AGITATOR-AANDM

ITEM	PART #	QTY	DESCRIPTION	COMMENTS
REF	6624328	-	ORIFCIE-AGITATOR	

Copyright © 2007 AGCO Corporation

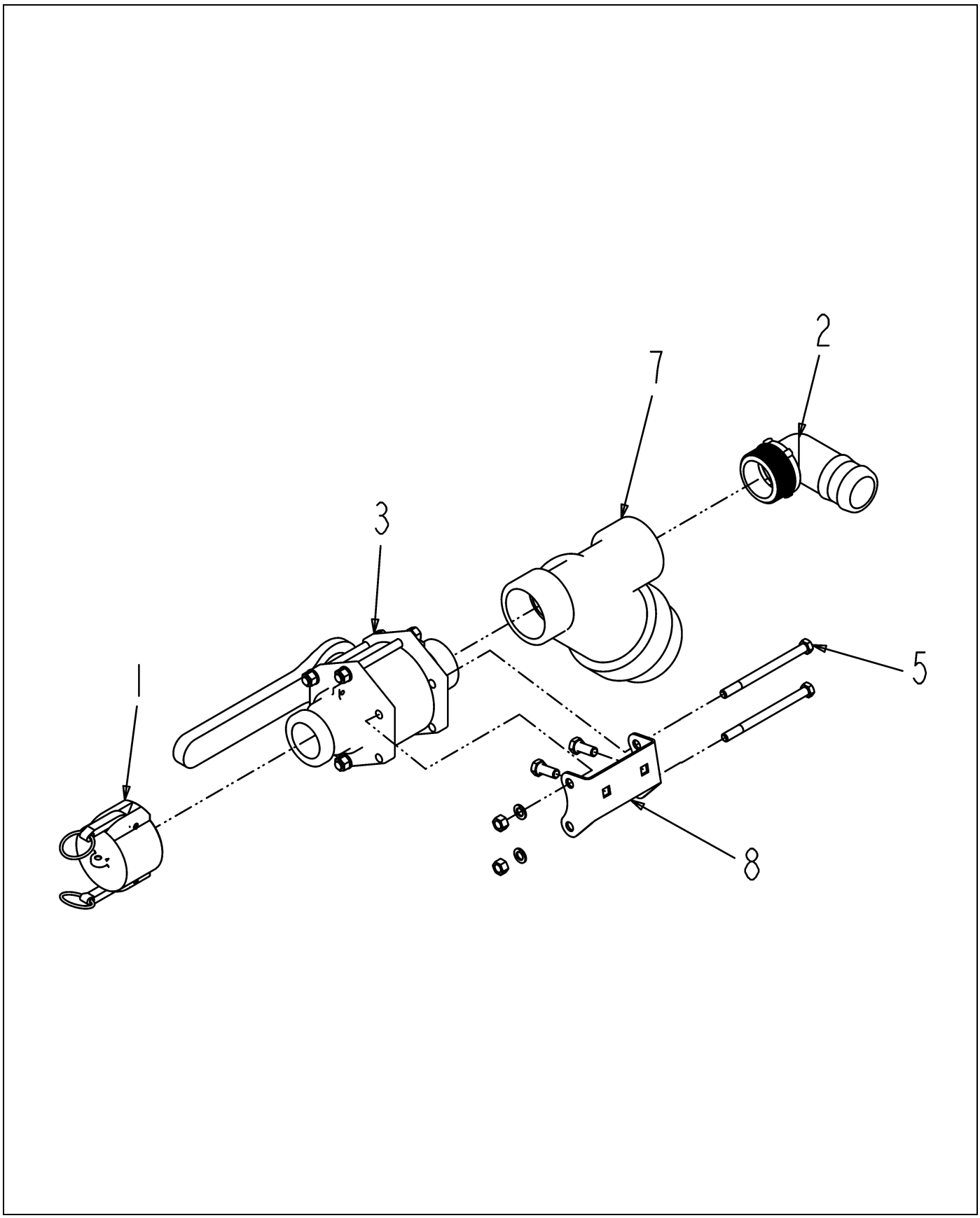

6802436-05-M672-.TIF

Copyright © 2007 AGCO Corporation

VALVE ASSY-INLET

ITEM	PART #	QTY	DESCRIPTION	COMMENTS
1	AG000829	1	CAP-LEVER,QC,2.00 PP	
2	AG050692	1	ELBOW 90D 2.00NPTX2.00 BARB PP	
3	WR50914	1	VALVE-BALL,2 IN FP,W/CAM	SEE PAGE 19-17
4	WR55173	2	BOLT-CARRIAGE,M10 X 25,	
5	AG553662	2	BOLT 0.37-16NCX 5.00 G5 ZN HHD	
6	AG129187	AR	PIPE SEALANT-FLEX BLACK	
7	6670750	1	FILTER-INLINE	
8	6801772	1	BRACKET	
	FOOTNOTE		USE REPAIR KIT WR51213 TO SERVICE BALL VALVE	

Copyright © 2007 AGCO Corporation

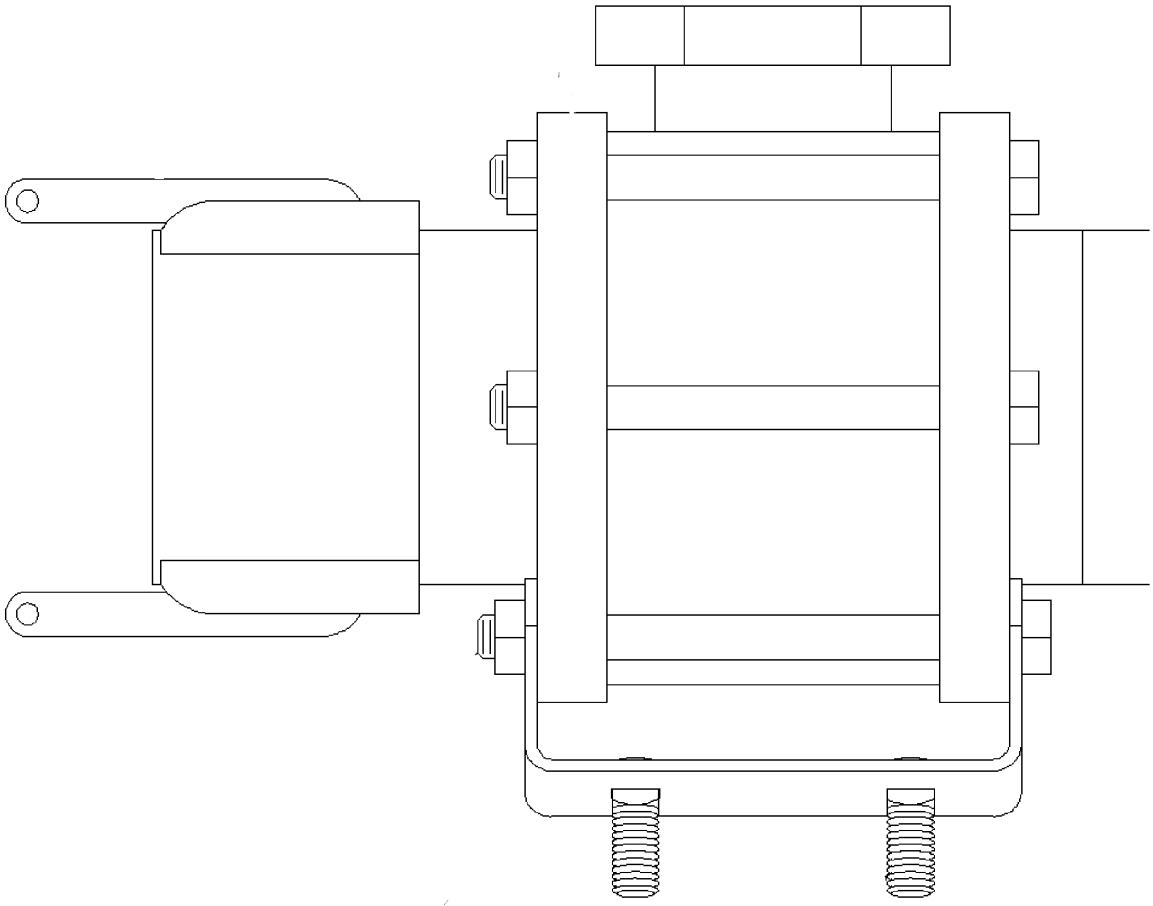

50914.TIF

Copyright © 2007 AGCO Corporation

VALVE-BALL,2 IN FP,W/CAM

ITEM	PART #	QTY	DESCRIPTION	COMMENTS
REF	WR51213	1	KIT-REPAIR,-32 PP VALVE	

Copyright © 2007 AGCO Corporation

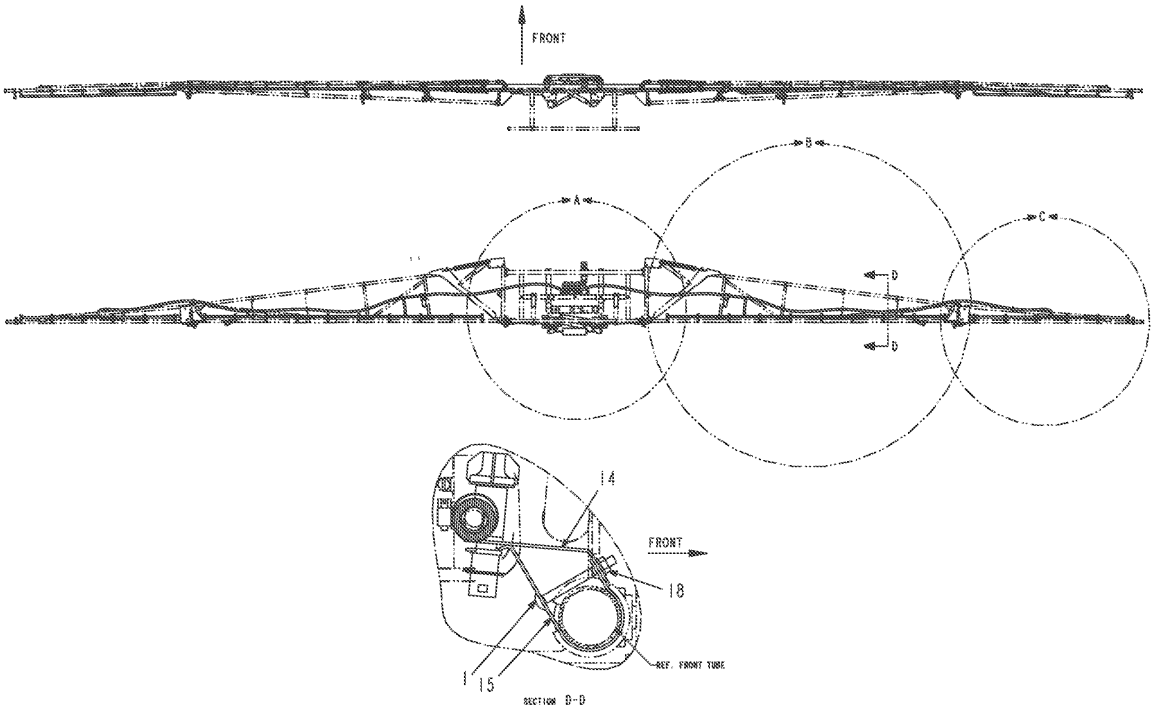

123351-B-L984-01.TIF

Copyright © 2007 AGCO Corporation

SPRAY INSTL-60 FT MANIFOLD

ITEM	PART #	QTY	DESCRIPTION	COMMENTS
1	WR55170	32	BOLT-CARRIAGE,M6 X 60,1.0	
14	6626121	32	BRACKET-UPPER	
15	6626122	32	BRACKET-LOWER	
18	6670124	32	NUT-FLANGE,SERRATED	

Copyright © 2007 AGCO Corporation

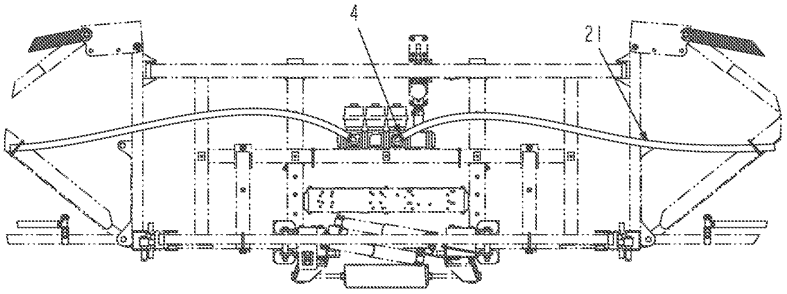

DETAIL A

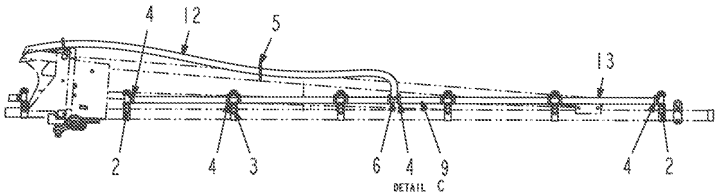

DETAIL C

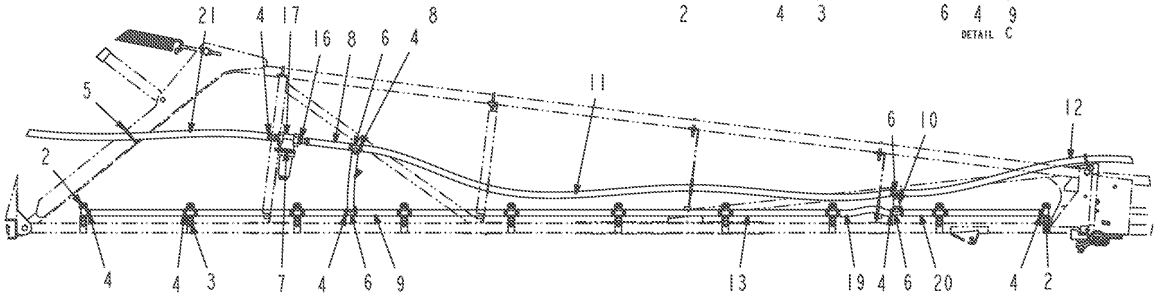

DETAIL B

123351-B-L984-02.TIF

Copyright © 2007 AGCO Corporation

SPRAY INSTL-60 FT MANIFOLD

ITEM	PART #	QTY	DESCRIPTION	COMMENTS
2	WR132508	8	NOZZLE ASM-SINGLE	SEE PAGE 19-20
3	WR132509	24	NOZZLE ASM-DOUBLE	SEE PAGE 19-21
4	AG561229	92	CLAMP 0.68-1.25 HOSE 12HS	
5	AG562496	AR	TIE CABLE 15.0 .18-4.00 BLACK	
6	6511103	10	TEE	
7	6595786	2	CLAMP-FULL CIRCLE	
8	6595825	4	HOSE	
9	6617492	8	HOSE	
10	6617494	2	HOSE	
11	6617495	2	HOSE	
12	6617496	2	HOSE	
13	6617498	22	HOSE	
16	6660899	4	ADAPTER-12HB/-12MP,PP	
17	6665873	2	FILTER ASSY-BOOM	SEE PAGE 19-53
19	WR55592	2	HOSE MANIFOLD 11.0 IN	
20	WR55593	2	HOSE MANIFOLD 6.5 IN	
21	WR55866	2	HOSE-NONE(2)-12 X 95.50	

Copyright © 2007 AGCO Corporation

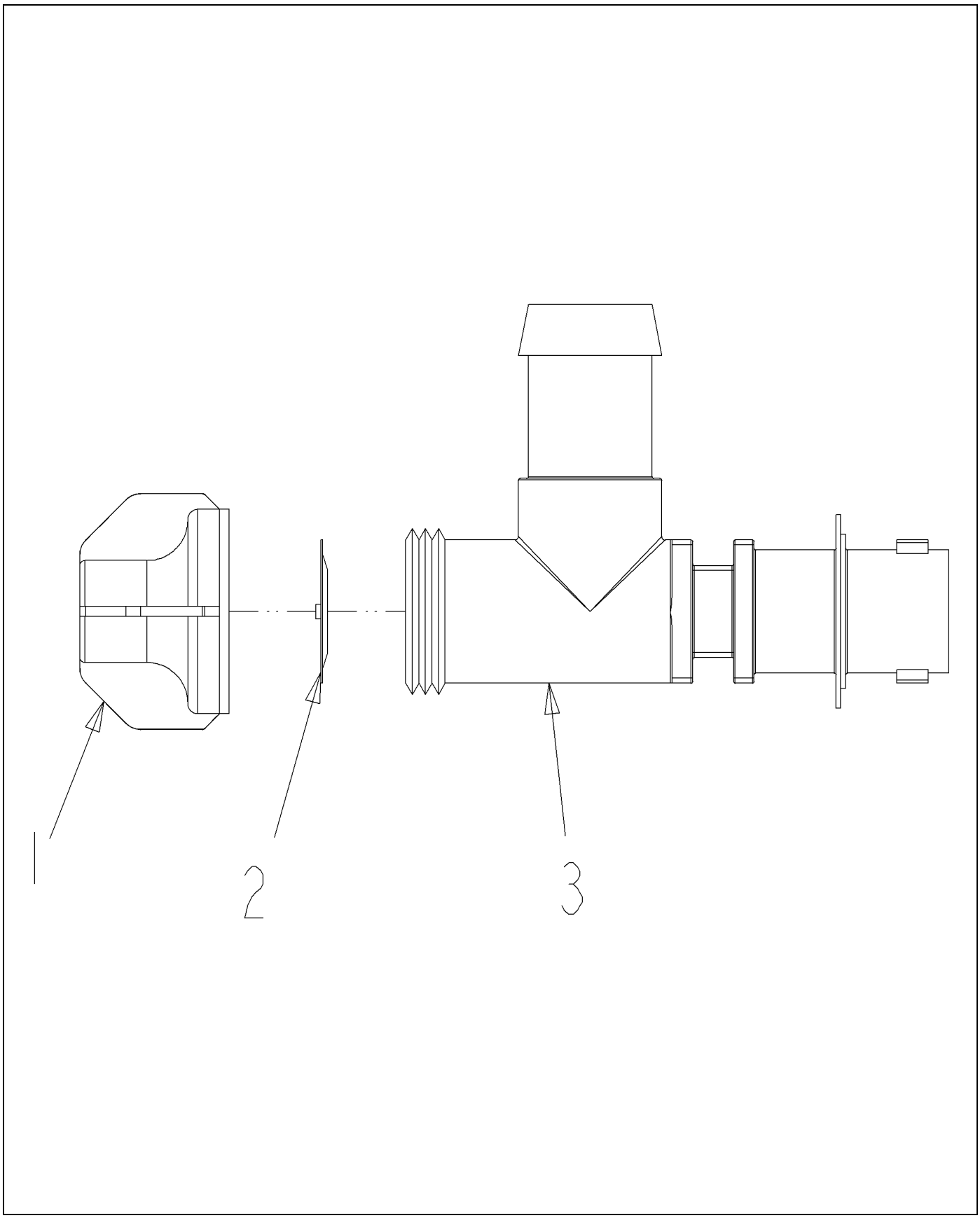

132508-02-R594-.TIF

Copyright © 2007 AGCO Corporation

NOZZLE ASM-SINGLE

ITEM	PART #	QTY	DESCRIPTION	COMMENTS
1	6633637	1	ENDCAP	
2	6633638	1	DIAPHRAGM	
3	6660072	1	NOZZLE-HSG,SINGLE	

Copyright © 2007 AGCO Corporation

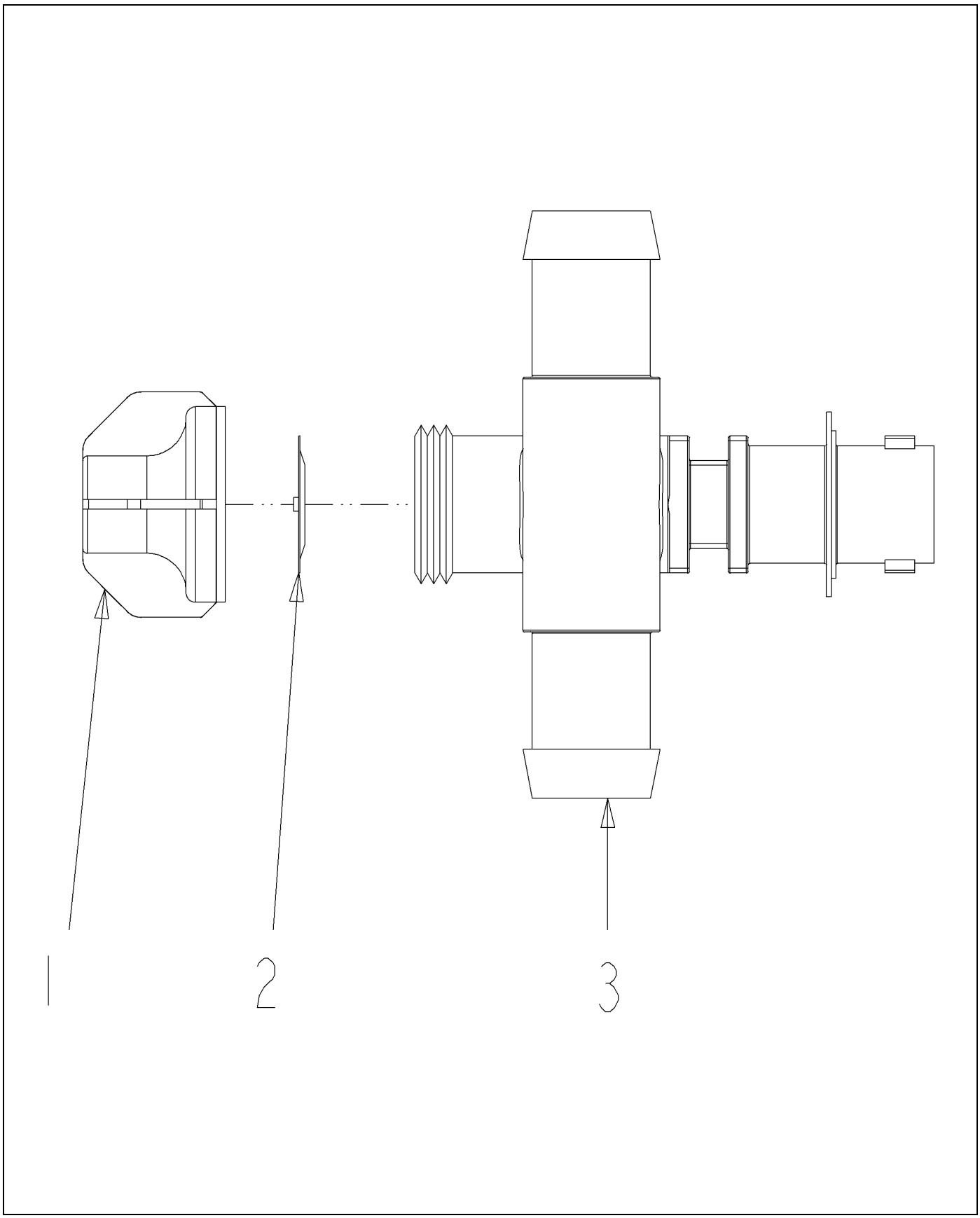

132509-02-R594-.TIF

Copyright © 2007 AGCO Corporation

NOZZLE ASM-DOUBLE

ITEM	PART #	QTY	DESCRIPTION	COMMENTS
1	6633637	1	ENDCAP	
2	6633638	1	DIAPHRAGM	
3	6660071	1	NOZZLE-HSG,DOUBLE	

Copyright © 2007 AGCO Corporation

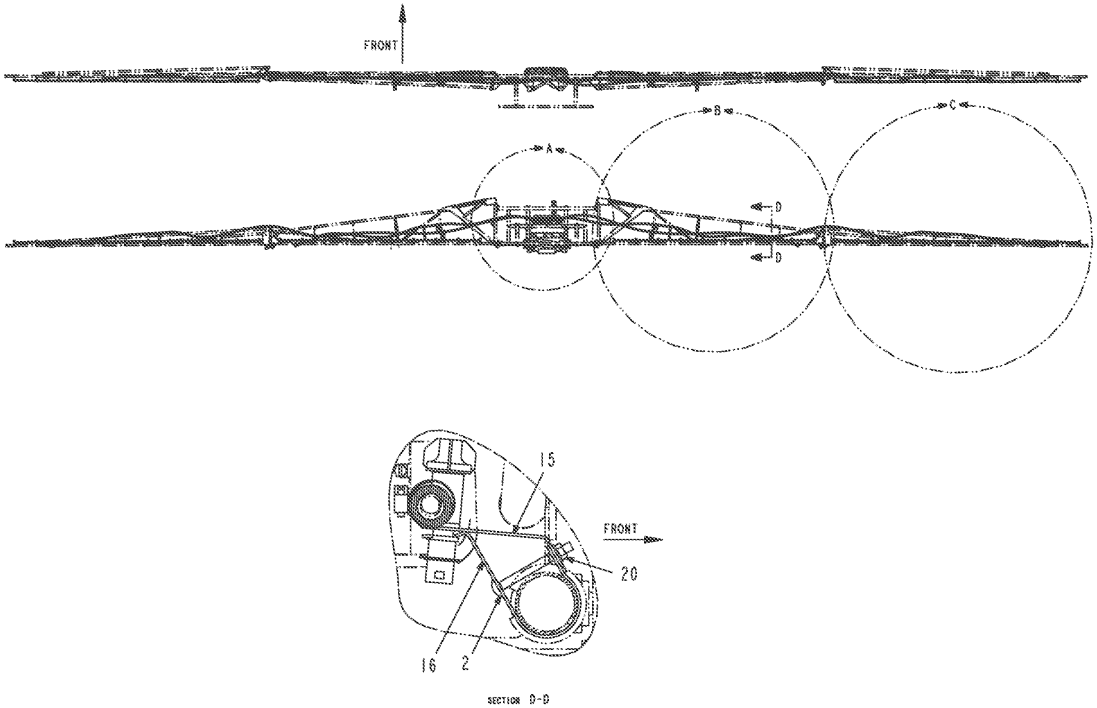

123352-B-L984-01.TIF

Copyright © 2007 AGCO Corporation

ITEM	PART #	QTY	DESCRIPTION	COMMENTS
2	WR55170	44	BOLT-CARRIAGE,M6 X 60,1.0	
15	6626121	44	BRACKET-UPPER	
16	6626122	44	BRACKET-LOWER	
20	6670124	44	NUT-FLANGE,SERRATED	

Copyright © 2007 AGCO Corporation

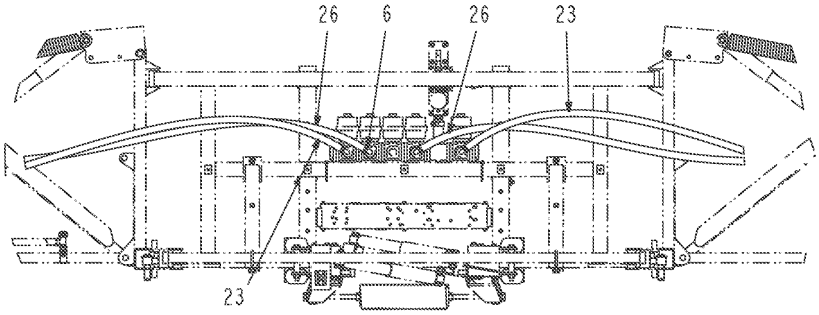

DETAIL A

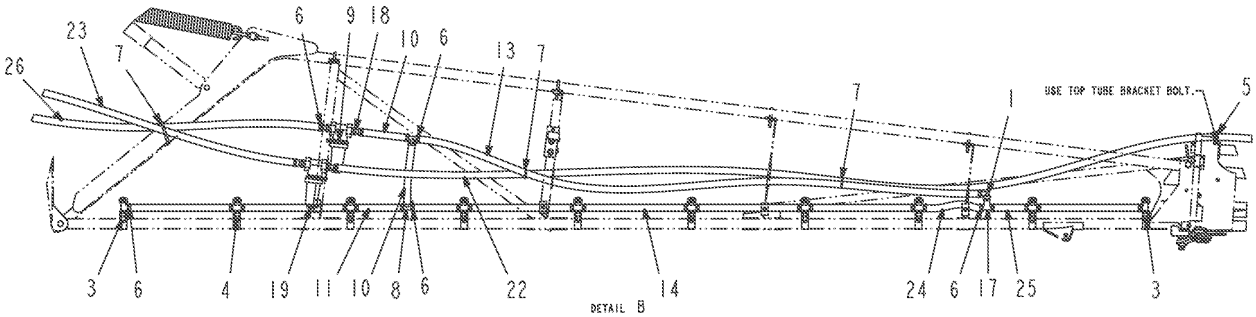

DETAIL B

123352-B-L984-02.TIF

Copyright © 2007 AGCO Corporation

SPRAY INSTL-80 FT MANIFOLD

ITEM	PART #	QTY	DESCRIPTION	COMMENTS
1	AG051142	4	ELBOW 90D 0.75NPTX0.75 BARB PP	
3	WR132508	8	NOZZLE ASM-SINGLE	SEE PAGE 19-20
4	WR132509	36	NOZZLE ASM-DOUBLE	SEE PAGE 19-21
5	AG560480	2	CLAMP 1.25-COATED HOSE CO	
6	AG561229	128	CLAMP 0.68-1.25 HOSE 12HS	
7	AG562496	AR	TIE CABLE 15.0 .18-4.00 BLACK	
8	6511103	8	TEE	
9	6595786	4	CLAMP-FULL CIRCLE	
10	6595825	4	HOSE	
11	6617492	12	HOSE	
13	6617495	2	HOSE	
14	6617498	32	HOSE	
17	6630914	4	TEE	
18	6660899	8	ADAPTER-12HB/-12MP,PP	
19	6665873	4	FILTER ASSY-BOOM	SEE PAGE 19-53
22	WR37797	2	HOSE 0.75 X 219.00	
23	WR37799	2	HOSE-0.75 X 88.00	
24	WR55592	2	HOSE MANIFOLD 11.0 IN	
25	WR55593	2	HOSE MANIFOLD 6.5 IN	
26	WR55866	2	HOSE-NONE(2)-12 X 95.50	

Copyright © 2007 AGCO Corporation

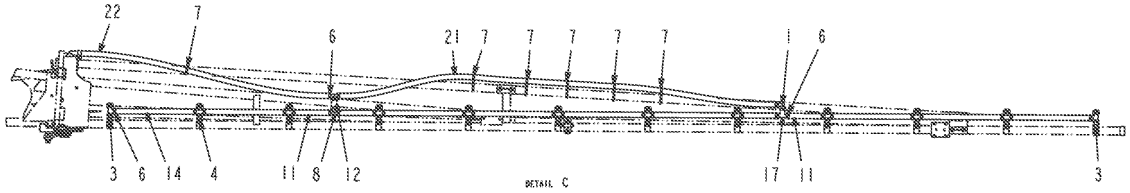

123352-B-L984-03.TIF

Copyright © 2007 AGCO Corporation

SPRAY INSTL-80 FT MANIFOLD

ITEM	PART #	QTY	DESCRIPTION	COMMENTS
1	AG051142	4	ELBOW 90D 0.75NPTX0.75 BARB PP	
3	WR132508	8	NOZZLE ASM-SINGLE	SEE PAGE 19-20
4	WR132509	36	NOZZLE ASM-DOUBLE	SEE PAGE 19-21
6	AG561229	128	CLAMP 0.68-1.25 HOSE 12HS	
7	AG562496	AR	TIE CABLE 15.0 .18-4.00 BLACK	
8	6511103	8	TEE	
11	6617492	12	HOSE	
12	6617494	2	HOSE	
14	6617498	32	HOSE	
17	6630914	4	TEE	
21	WR37796	2	HOSE-0.75 2BRD EPDM	
22	WR37797	2	HOSE 0.75 X 219.00	

Copyright © 2007 AGCO Corporation

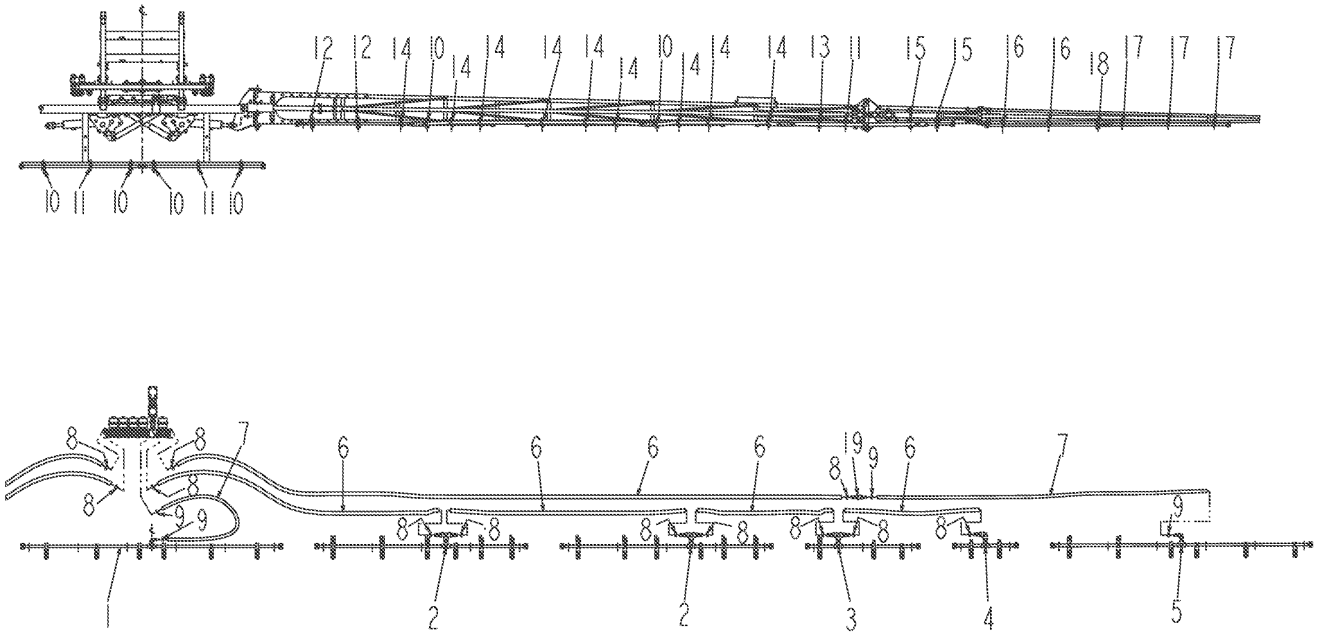

136751-02-N183-.TIF

Copyright © 2007 AGCO Corporation

OPT-PP PLMB,SC6080X5X20,OFF

ITEM	PART #	QTY	DESCRIPTION	COMMENTS
1	AG136752	1	PIPE ASM-90D W/.75HB,6X20.PP	SEE PAGE 19-26
2	AG136753	4	PIPE ASM-T W/2 1.00HB,5X20,PP	SEE PAGE 19-27
3	AG136754	2	PIPE ASM-T W/2 1.00HB,3X20,PP	SEE PAGE 19-28
4	AG136755	2	PIPE ASM-90D W/1.00HB,2X20,PP	SEE PAGE 19-29
5	AG136756	2	PIPE ASM-90D W/ .75HB,6X20,PP	SEE PAGE 19-30
6	AG511528	-	HOSE 1.00 2BRD EPDM [BULK: 105.584 FT]	
7	AG513385	-	HOSE,MED.PRESS 0.75 2BRD EPDM [BULK: 29.834 FT]	
8	AG561213	20	CLAMP 0.81-1.50 HOSE 16HS	
9	AG561229	6	CLAMP 0.68-1.25 HOSE 12HS	
10	506438D1	8	BRKT ASM-L,.75 STAUFF,STD	SEE PAGE 19-31
11	506439D1	4	BRKT ASM-Z,SH,.75IPS,STD	SEE PAGE 19-32
12	506440D1	4	BRKT ASM-L/LG STR,.75PP,2PCLP	SEE PAGE 19-33
13	506441D1	2	BRKT ASM-L,.75 STAUFF,PCLP,STD	SEE PAGE 19-34
14	506442D1	18	BRKT ASM-Z,LG,.75/1.00IPS,PCLP	SEE PAGE 19-35
15	506443D1	4	BRKT ASM-L,.75 STAUFF,REV PCLP	SEE PAGE 19-36
16	506444D1	4	BRKT ASM-Z,LG,.75/1.00IPS,1.0U	SEE PAGE 19-37
17	506445D1	6	BRKT ASM-Z,SH,.75IPS,1.00U	SEE PAGE 19-38
18	506446D1	2	BRKT ASM-L,.75 STAUFF,1.00U	SEE PAGE 19-39
19	508515D1	2	MENDER ASM-HOSE,.75X1.00,PP	SEE PAGE 19-40

Copyright © 2007 AGCO Corporation

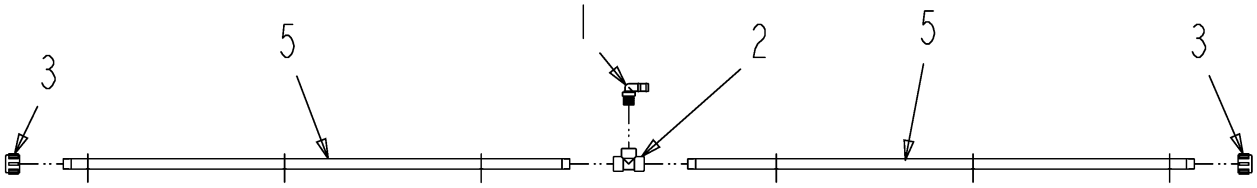

136752-01-M891-.TIF

Copyright © 2007 AGCO Corporation

PIPE ASM-90D W/.75HB,6X20.PP

ITEM	PART #	QTY	DESCRIPTION	COMMENTS
1	AG051142	1	ELBOW 90D 0.75NPTX0.75 BARB PP	
2	AG051161	1	TEE,PIPE,0.75FNPT,PP	
3	AG051535	2	CAP-PIPE,0.75NPT PP	
4	AG129187	AR	PIPE SEALANT-FLEX BLACK	
5	506432D1	2	PIPE-PP,.75,20IN,51.50	

Copyright © 2007 AGCO Corporation

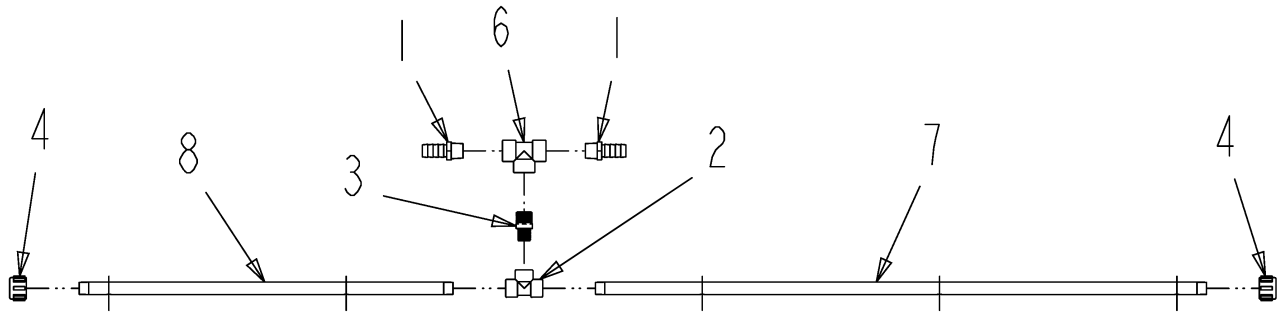

136753-01-M891-.TIF

Copyright © 2007 AGCO Corporation

PIPE ASM-T W/2 1.00HB,5X20,PP

ITEM	PART #	QTY	DESCRIPTION	COMMENTS
1	AG051059	2	BARB-HOSE,1.00MNPTX1.00BARB,PP	
2	AG051161	1	TEE,PIPE,0.75FNPT,PP	
3	AG051436	1	NIPPLE POLY RED 1.00 X 0.75	
4	AG051535	2	CAP-PIPE,0.75NPT PP	
5	AG129187	AR	PIPE SEALANT-FLEX BLACK	
6	AG516405	1	TEE,PIPE,1.00FNPT,PP	
7	506432D1	1	PIPE-PP,.75,20IN,51.50	
8	506433D1	1	PIPE-PP,.75,20IN,31.50	

Copyright © 2007 AGCO Corporation

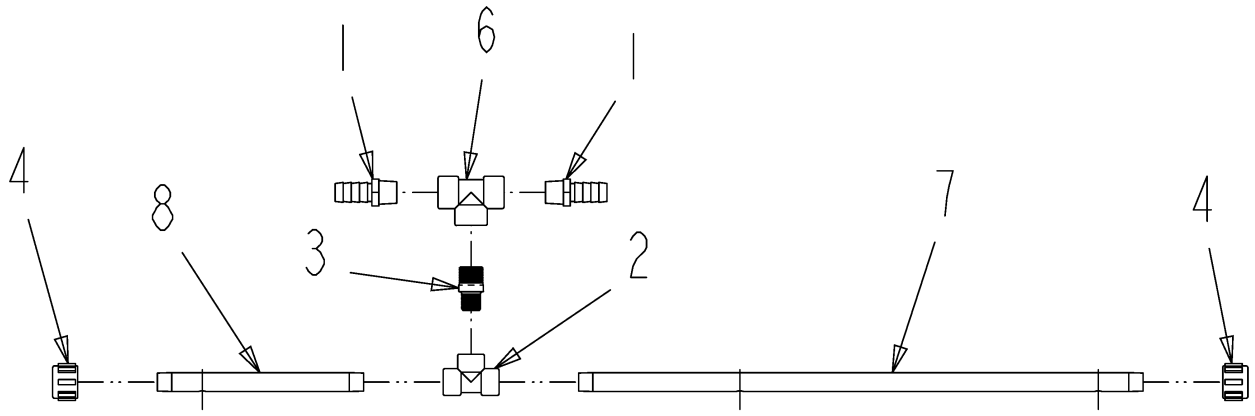

136754-01-M891-.TIF

Copyright © 2007 AGCO Corporation

PIPE ASM-T W/2 1.00HB,3X20,PP

ITEM	PART #	QTY	DESCRIPTION	COMMENTS
1	AG051059	2	BARB-HOSE,1.00MNPTX1.00BARB,PP	
2	AG051161	1	TEE,PIPE,0.75FNPT,PP	
3	AG051436	1	NIPPLE POLY RED 1.00 X 0.75	
4	AG051535	2	CAP-PIPE,0.75NPT PP	
5	AG129187	AR	PIPE SEALANT-FLEX BLACK	
6	AG516405	1	TEE,PIPE,1.00FNPT,PP	
7	506433D1	1	PIPE-PP,.75,20IN,31.50	
8	506434D1	2	PIPE-PP,.75,20IN,11.50	

Copyright © 2007 AGCO Corporation

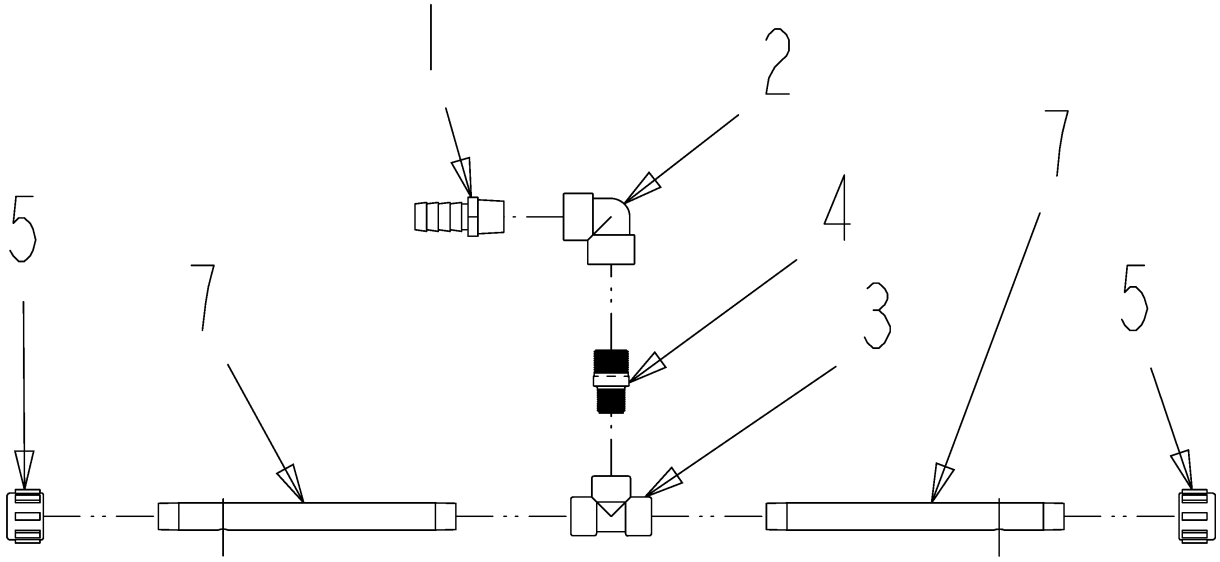

136755-01-M891-.TIF

Copyright © 2007 AGCO Corporation

PIPE ASM-90D W/1.00HB,2X20,PP

ITEM	PART #	QTY	DESCRIPTION	COMMENTS
1	AG051059	1	BARB-HOSE,1.00MNPTX1.00BARB,PP	
2	AG051127	1	ELBOW-PIPE,1.00FNPT,90D,PP	
3	AG051161	1	TEE,PIPE,0.75FNPT,PP	
4	AG051436	1	NIPPLE POLY RED 1.00 X 0.75	
5	AG051535	2	CAP-PIPE,0.75NPT PP	
6	AG129187	AR	PIPE SEALANT-FLEX BLACK	
7	506434D1	2	PIPE-PP,.75,20IN,11.50	

Copyright © 2007 AGCO Corporation

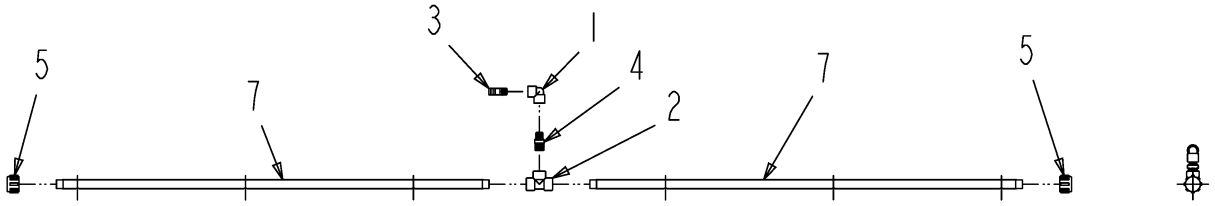

136756-01-M891-.TIF

Copyright © 2007 AGCO Corporation

PIPE ASM-90D W/ .75HB,6X20,PP

ITEM	PART #	QTY	DESCRIPTION	COMMENTS
1	AG051125	1	ELBOW-PIPE,0.50FNPT,90D,PP	
2	AG051161	1	TEE,PIPE,0.75FNPT,PP	
3	AG051177	1	BARB-HOSE,0.50MNPTX0.75BARB,PP	
4	AG051435	1	NIPPLE RED POLY 0.75 X 0.50	
5	AG051535	2	CAP-PIPE,0.75NPT PP	
6	AG129187	AR	PIPE SEALANT-FLEX BLACK	
7	506432D1	2	PIPE-PP,.75,20IN,51.50	

Copyright © 2007 AGCO Corporation

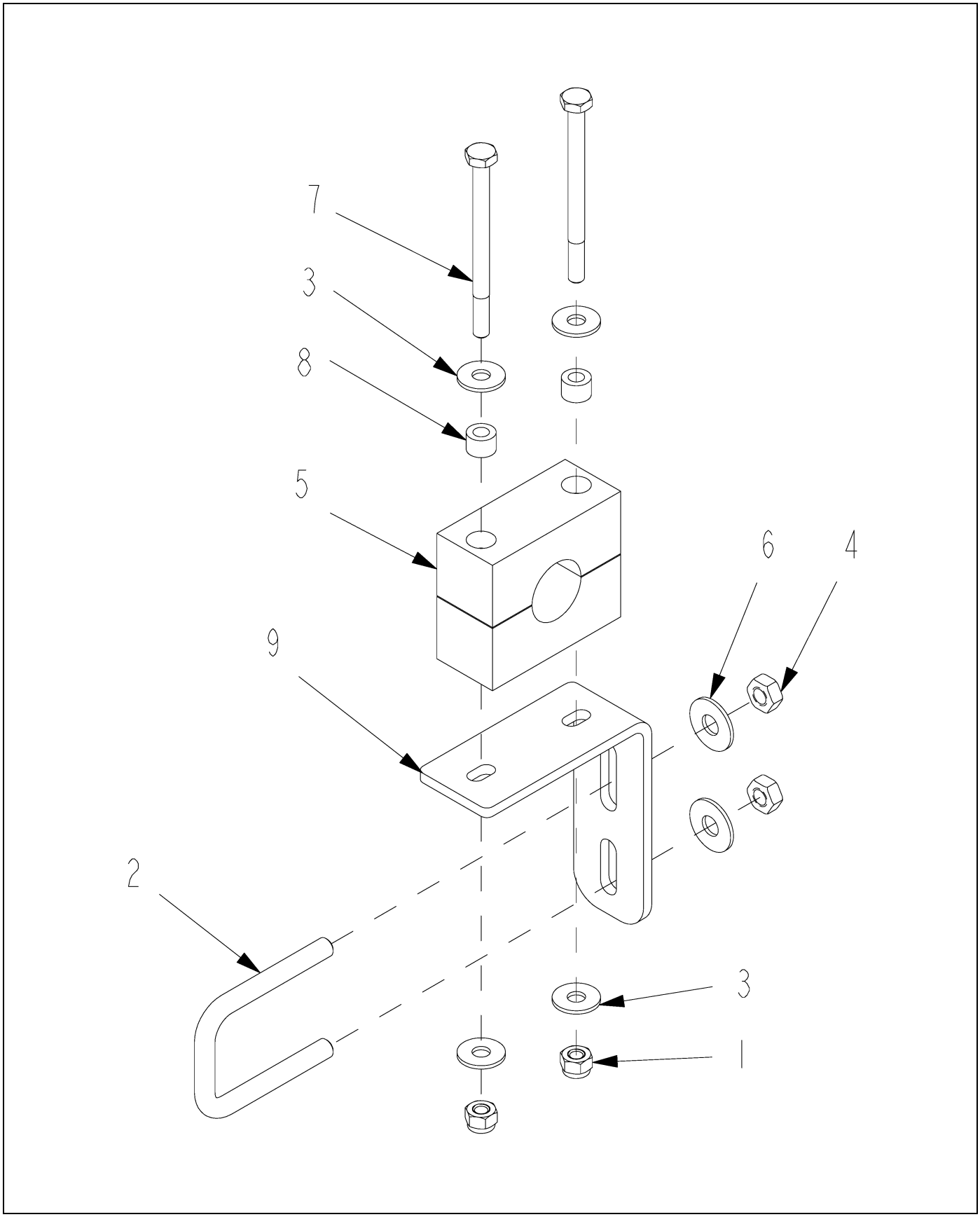

506438D1-02-N151-.TIF

Copyright © 2007 AGCO Corporation

BRKT ASM-L,.75 STAUFF,STD

ITEM	PART #	QTY	DESCRIPTION	COMMENTS
1	AG027275	2	NUT 0.25-20NC HEX SS REG NY	
2	AG231204	1	BOLT-U .31-18X1.88X2.63	
3	AG515121	4	WASHER 0.25 FL SS REG TYPE-B	
4	AG516403	2	NUT 0.31-18NC HEX SS REG NY	
5	AG518326	1	CLAMP 3/4 INCH PIPE (RTG)	
6	AG562074	2	WASHER 0.31 FL SS REG TYPE-B	
7	AG563061	2	BOLT 0.25-20NCX 3.25 SS HHD	
8	AG609777	2	INSERT STAUFF SPACER	
9	506437D1	1	BRKT-L,STANDOFF,STAUFF	

Copyright © 2007 AGCO Corporation

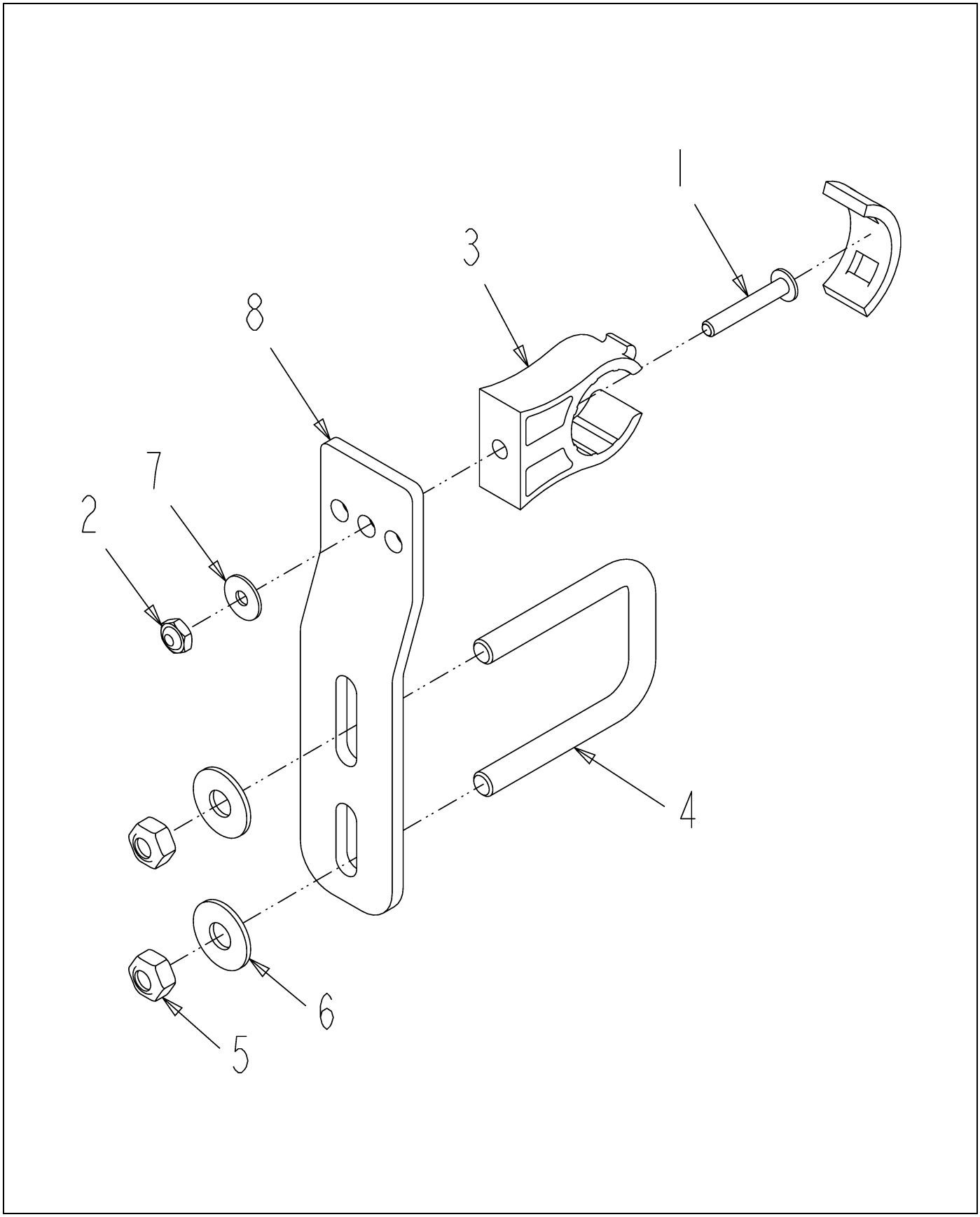

506439D1-01-M891-.TIF

Copyright © 2007 AGCO Corporation

BRKT ASM-Z,SH,.75IPS,STD

ITEM	PART #	QTY	DESCRIPTION	COMMENTS
1	AG027273	1	SCREW 10-24X 1.25 PHD PHILSS(P	
2	AG027274	1	NUT #10-24NC HEX SS REG NY	
3	AG136748	1	CLAMP-.75 IPS POLY	
4	AG231204	1	BOLT-U .31-18X1.88X2.63	
5	AG516403	2	NUT 0.31-18NC HEX SS REG NY	
6	AG562074	2	WASHER 0.31 FL SS REG TYPE-B	
7	AG562082	1	WASHER #10 FL SS REG TYPE-B	
8	506435D1	1	BRKT-Z,STANDOFF,SH	

Copyright © 2007 AGCO Corporation

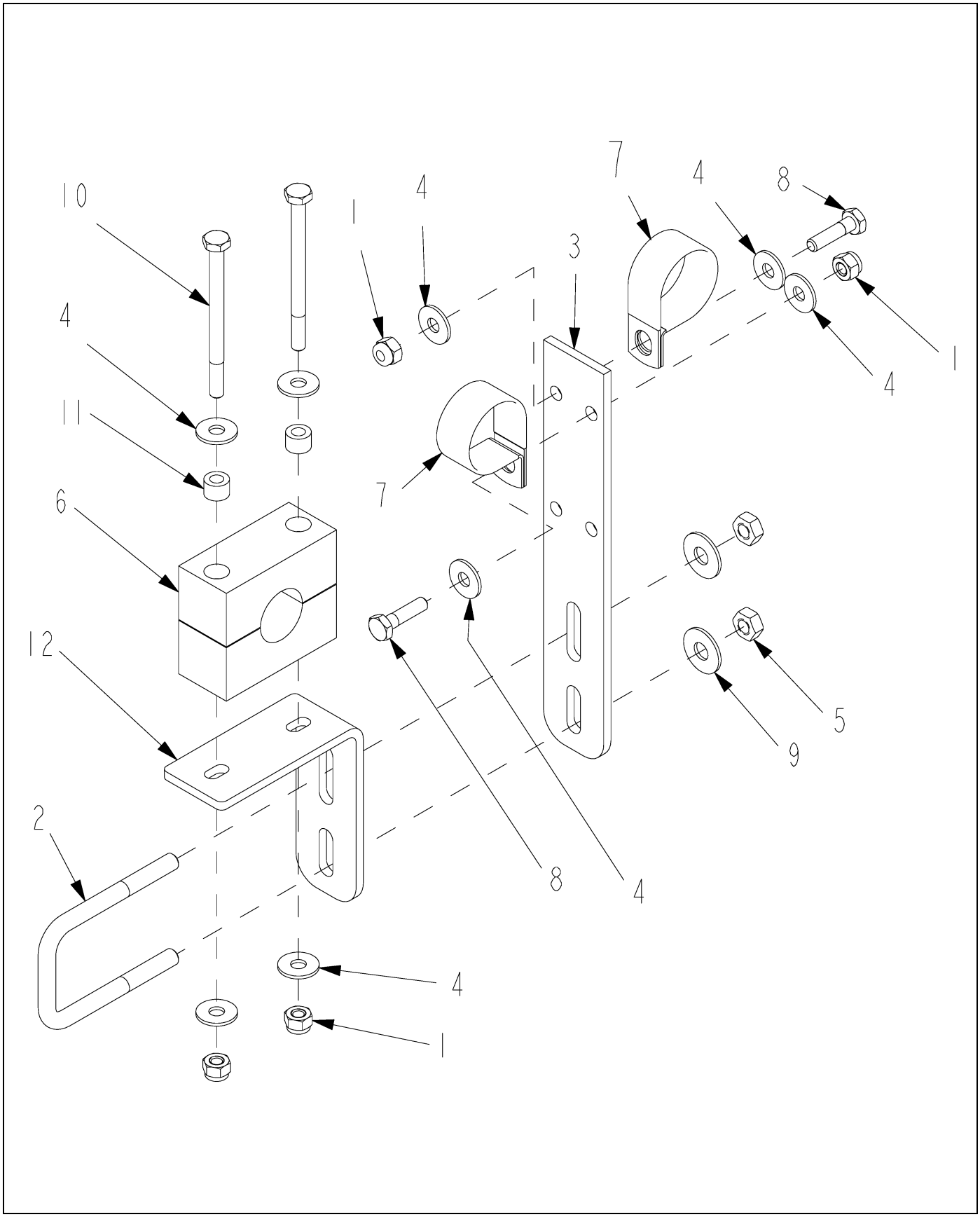

506440D1-02-N183-.TIF

Copyright © 2007 AGCO Corporation

BRKT ASM-L/LG STR,.75PP,2PCLP

ITEM	PART #	QTY	DESCRIPTION	COMMENTS
1	AG027275	4	NUT 0.25-20NC HEX SS REG NY	
2	AG136757	1	BOLT-U .31-18 X 1.75 X 3.00	
3	AG234375	1	BRACKET LONG STANDOFF	
4	AG515121	8	WASHER 0.25 FL SS REG TYPE-B	
5	AG516403	2	NUT 0.31-18NC HEX SS REG NY	
6	AG518326	1	CLAMP 3/4 INCH PIPE (RTG)	
7	AG519751	2	CLAMP 1.38 DIA COATED HOSE	
8	AG562064	2	BOLT 0.25-20NCX 1.00 SS HHD	
9	AG562074	2	WASHER 0.31 FL SS REG TYPE-B	
10	AG563061	2	BOLT 0.25-20NCX 3.25 SS HHD	
11	AG609777	2	INSERT STAUFF SPACER	
12	506437D1	1	BRKT-L,STANDOFF,STAUFF	

Copyright © 2007 AGCO Corporation

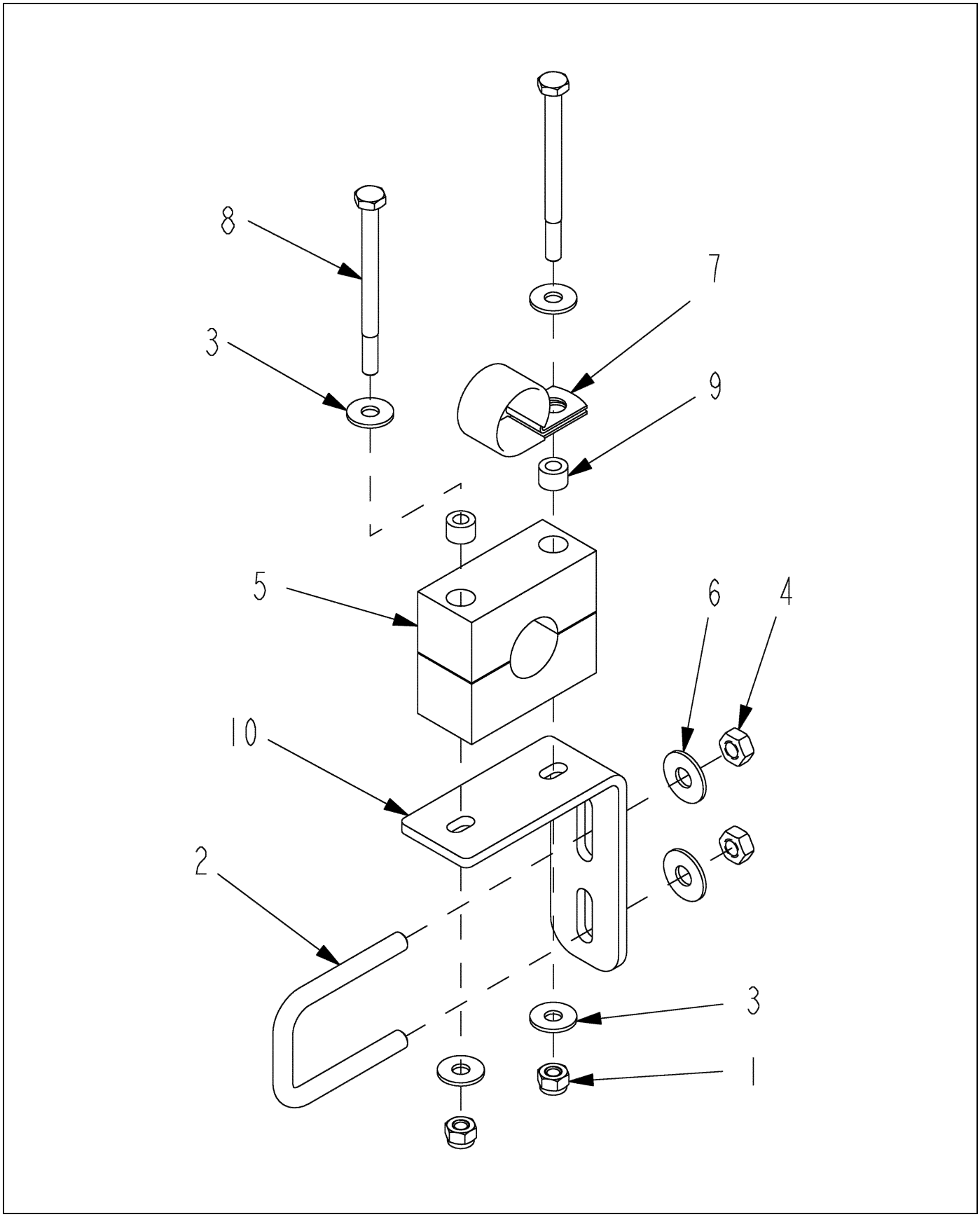

506441D1-02-N183-.TIF

Copyright © 2007 AGCO Corporation

BRKT ASM-L,.75 STAUFF,PCLP,STD

ITEM	PART #	QTY	DESCRIPTION	COMMENTS
1	AG027275	2	NUT 0.25-20NC HEX SS REG NY	
2	AG231204	1	BOLT-U .31-18X1.88X2.63	
3	AG515121	4	WASHER 0.25 FL SS REG TYPE-B	
4	AG516403	2	NUT 0.31-18NC HEX SS REG NY	
5	AG518326	1	CLAMP 3/4 INCH PIPE (RTG)	
6	AG562074	2	WASHER 0.31 FL SS REG TYPE-B	
7	AG562821	1	CLAMP 1.12-COATED HOSE	
8	AG563061	2	BOLT 0.25-20NCX 3.25 SS HHD	
9	AG609777	2	INSERT STAUFF SPACER	
10	506437D1	1	BRKT-L,STANDOFF,STAUFF	

Copyright © 2007 AGCO Corporation

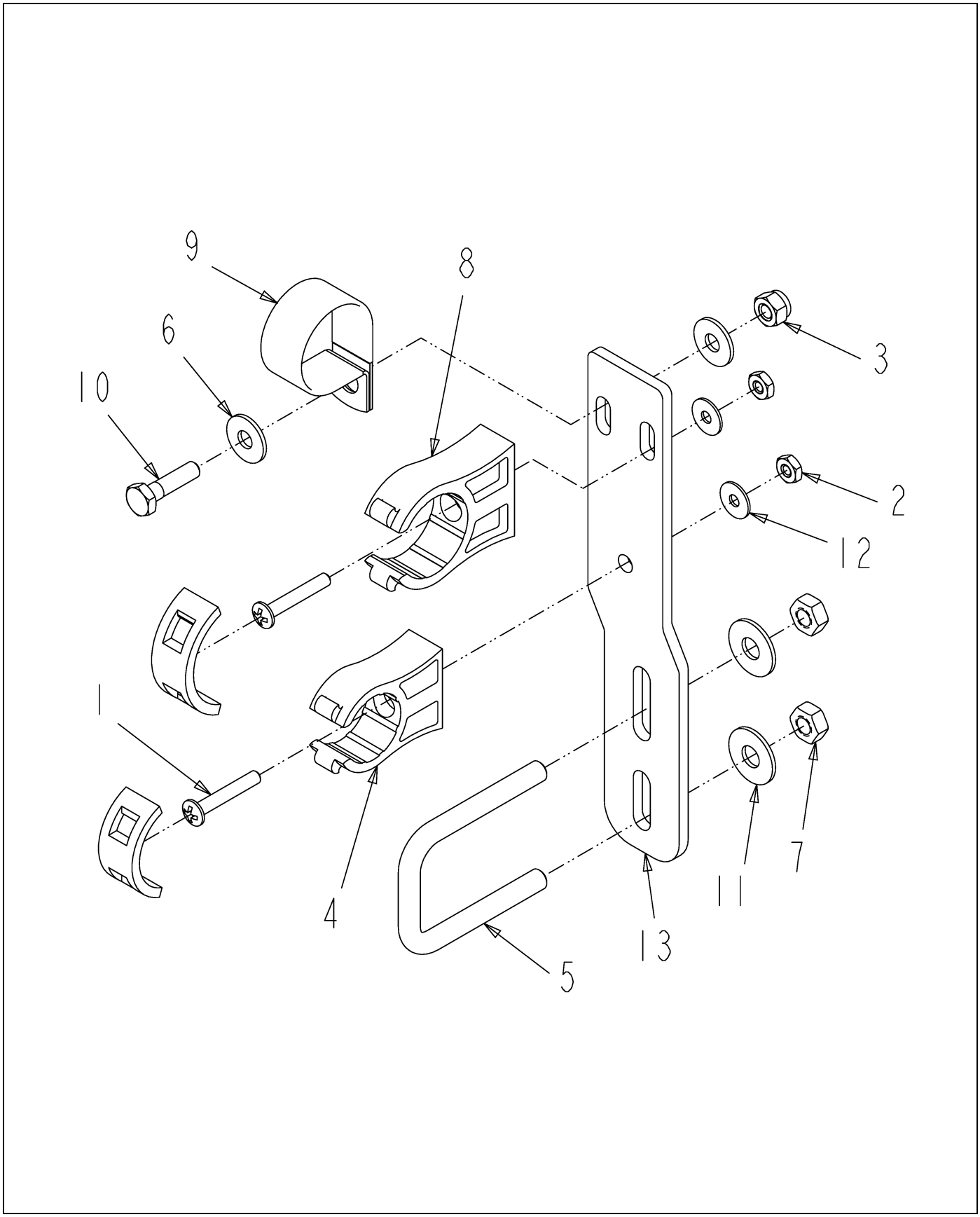

506442D1-01-M891-.TIF

Copyright © 2007 AGCO Corporation

BRKT ASM-Z,LG,.75/1.00IPS,PCLP

ITEM	PART #	QTY	DESCRIPTION	COMMENTS
1	AG027273	2	SCREW 10-24X 1.25 PHD PHILSS(P	
2	AG027274	2	NUT #10-24NC HEX SS REG NY	
3	AG027275	1	NUT 0.25-20NC HEX SS REG NY	
4	AG136748	1	CLAMP-.75 IPS POLY	
5	AG231204	1	BOLT-U .31-18X1.88X2.63	
6	AG515121	2	WASHER 0.25 FL SS REG TYPE-B	
7	AG516403	2	NUT 0.31-18NC HEX SS REG NY	
8	AG519749	1	CLAMP 1.00 IPS POLY	
9	AG519751	1	CLAMP 1.38 DIA COATED HOSE	
10	AG562064	1	BOLT 0.25-20NCX 1.00 SS HHD	
11	AG562074	2	WASHER 0.31 FL SS REG TYPE-B	
12	AG562082	2	WASHER #10 FL SS REG TYPE-B	
13	506436D1	1	BRKT-Z,STANDOFF,LG	

Copyright © 2007 AGCO Corporation

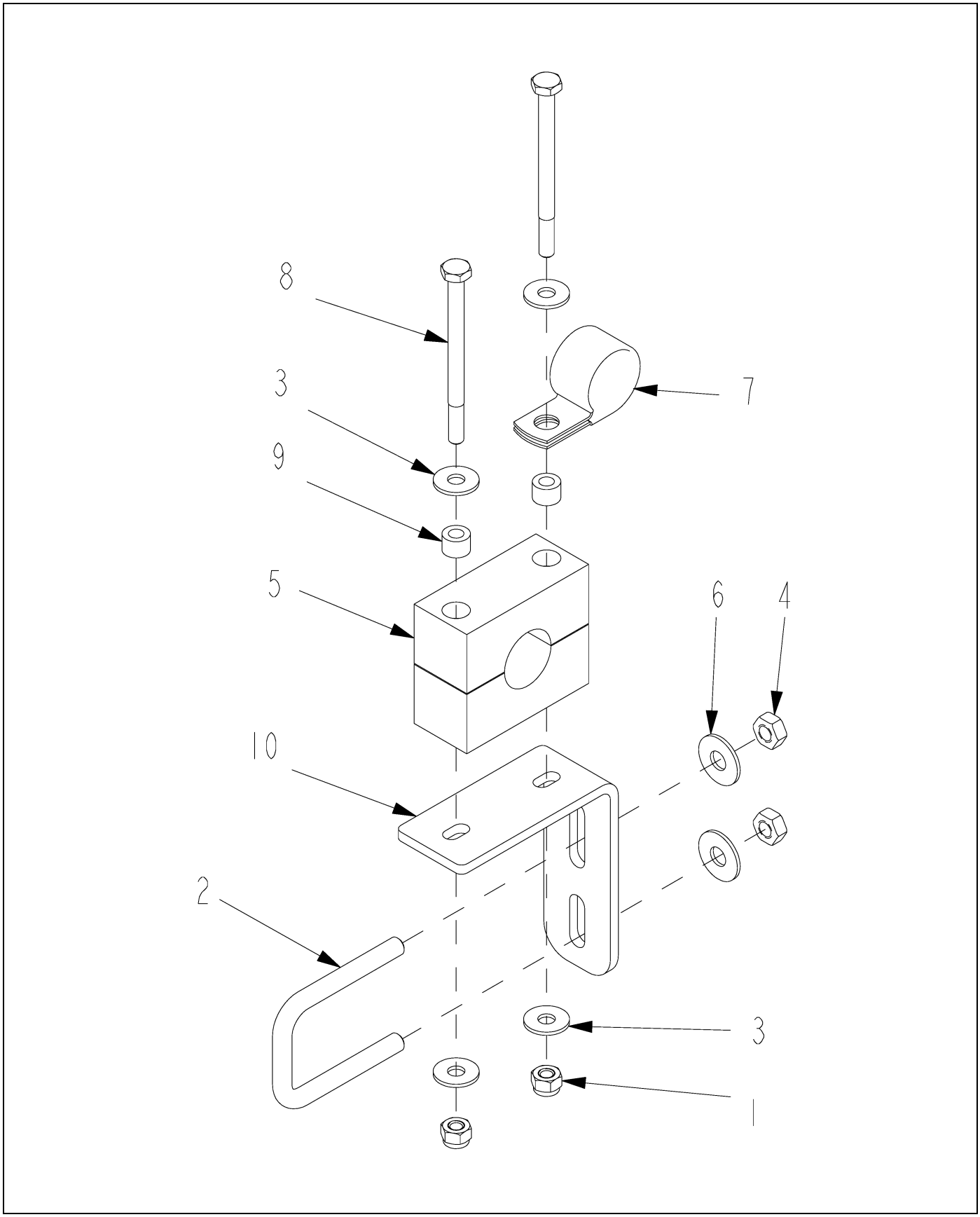

506443D1-02-N183-.TIF

Copyright © 2007 AGCO Corporation

BRKT ASM-L,.75 STAUFF,REV PCLP

ITEM	PART #	QTY	DESCRIPTION	COMMENTS
1	AG027275	2	NUT 0.25-20NC HEX SS REG NY	
2	AG231204	1	BOLT-U .31-18X1.88X2.63	
3	AG515121	4	WASHER 0.25 FL SS REG TYPE-B	
4	AG516403	2	NUT 0.31-18NC HEX SS REG NY	
5	AG518326	1	CLAMP 3/4 INCH PIPE (RTG)	
6	AG562074	2	WASHER 0.31 FL SS REG TYPE-B	
7	AG562821	1	CLAMP 1.12-COATED HOSE	
8	AG563061	2	BOLT 0.25-20NCX 3.25 SS HHD	
9	AG609777	2	INSERT STAUFF SPACER	
10	506437D1	1	BRKT-L,STANDOFF,STAUFF	

Copyright © 2007 AGCO Corporation

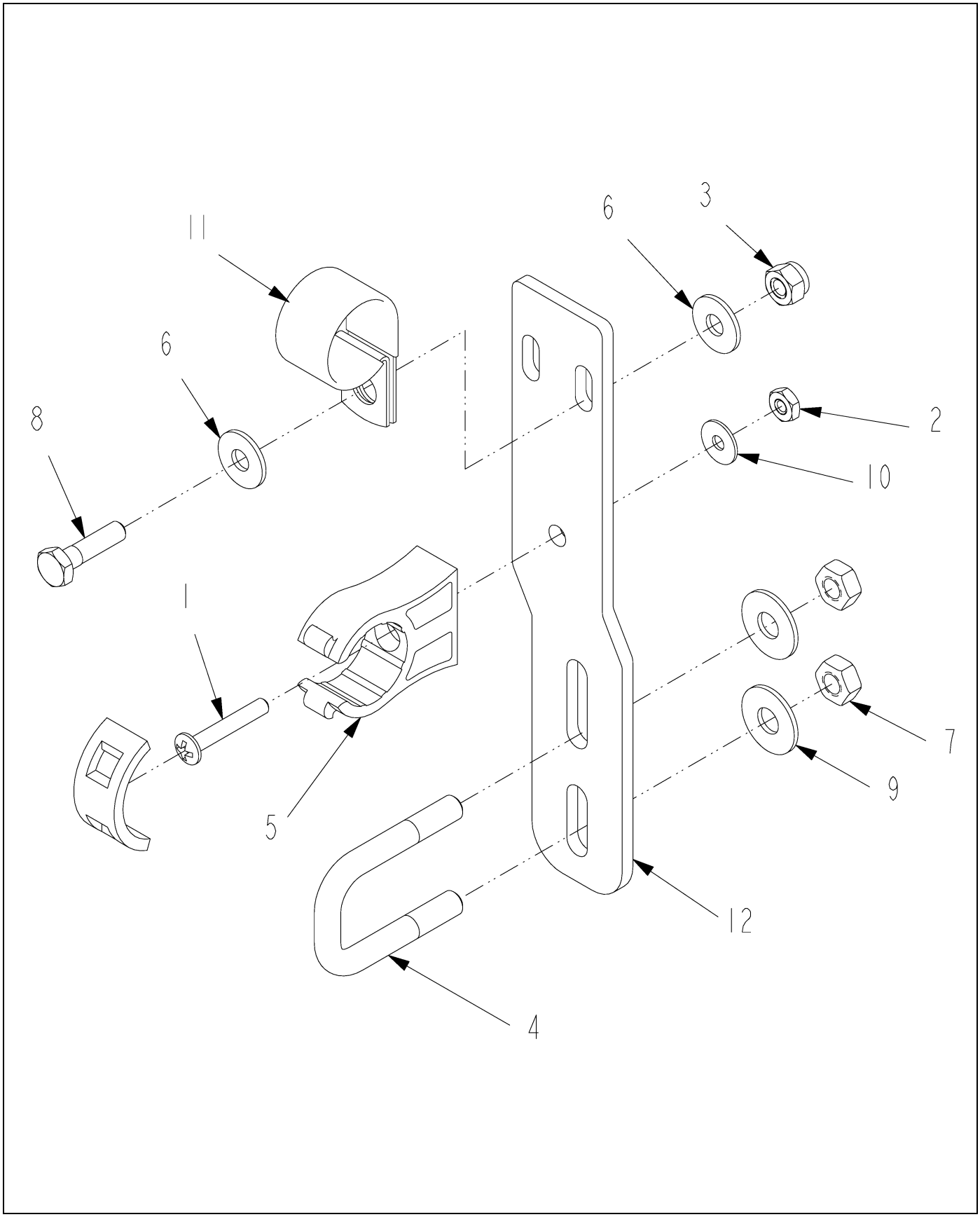

506444D1-02-N183-.TIF

Copyright © 2007 AGCO Corporation

BRKT ASM-Z,LG,.75/1.00IPS,1.0U

ITEM	PART #	QTY	DESCRIPTION	COMMENTS
1	AG027273	1	SCREW 10-24X 1.25 PHD PHILSS(P	
2	AG027274	1	NUT #10-24NC HEX SS REG NY	
3	AG027275	1	NUT 0.25-20NC HEX SS REG NY	
4	WR129144	1	BOLT-U,.31-18X1.06X1.97,SQ,SS	
5	AG136748	1	CLAMP-.75 IPS POLY	
6	AG515121	2	WASHER 0.25 FL SS REG TYPE-B	
7	AG516403	2	NUT 0.31-18NC HEX SS REG NY	
8	AG562064	1	BOLT 0.25-20NCX 1.00 SS HHD	
9	AG562074	2	WASHER 0.31 FL SS REG TYPE-B	
10	AG562082	1	WASHER #10 FL SS REG TYPE-B	
11	AG562821	1	CLAMP 1.12-COATED HOSE	
12	506436D1	1	BRKT-Z,STANDOFF,LG	

Copyright © 2007 AGCO Corporation

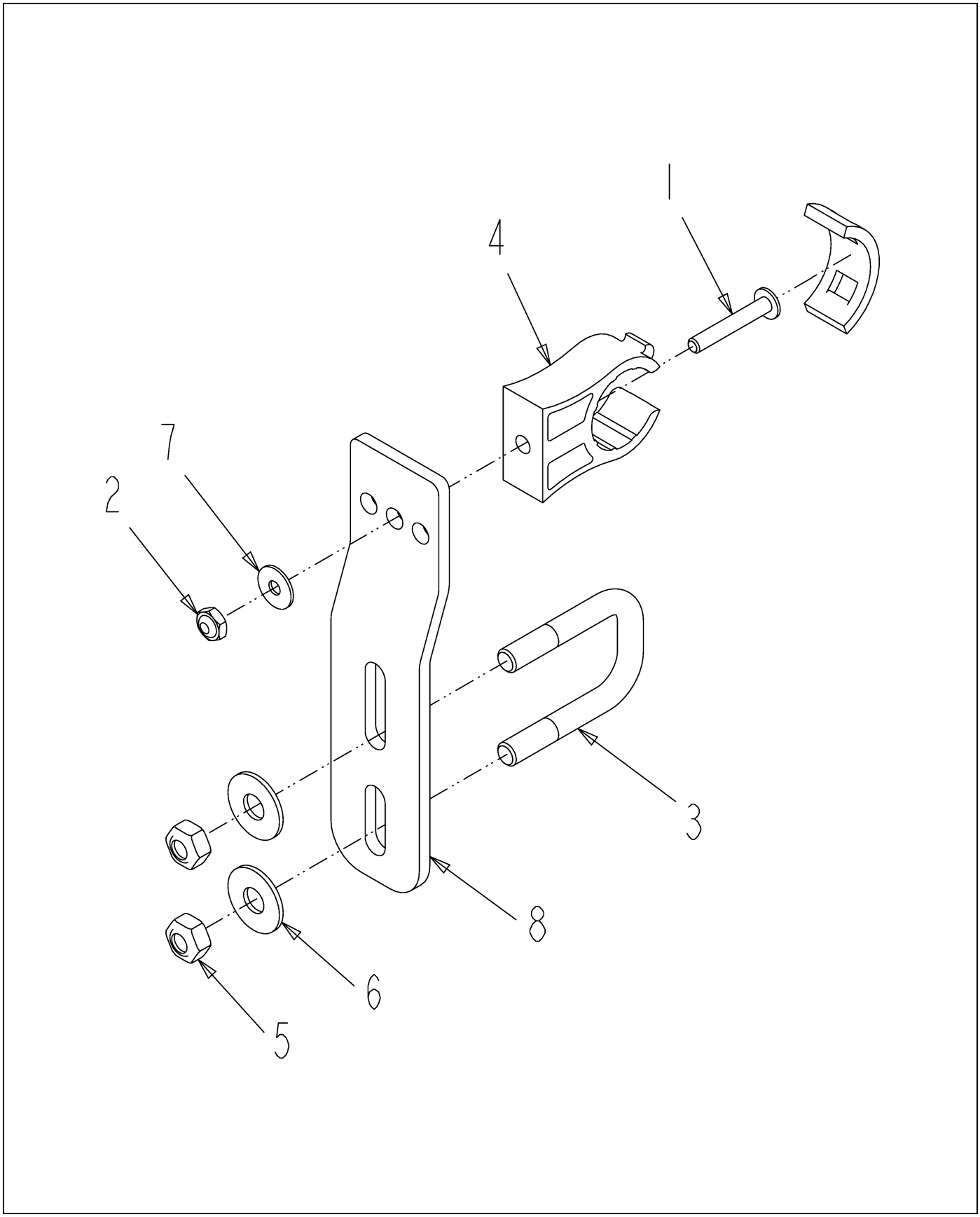

506445D1-01-M891-.TIF

Copyright © 2007 AGCO Corporation

BRKT ASM-Z,SH,.75IPS,1.00U

ITEM	PART #	QTY	DESCRIPTION	COMMENTS
1	AG027273	1	SCREW 10-24X 1.25 PHD PHILSS(P	
2	AG027274	1	NUT #10-24NC HEX SS REG NY	
3	WR129144	1	BOLT-U,.31-18X1.06X1.97,SQ,SS	
4	AG136748	1	CLAMP-.75 IPS POLY	
5	AG516403	2	NUT 0.31-18NC HEX SS REG NY	
6	AG562074	2	WASHER 0.31 FL SS REG TYPE-B	
7	AG562082	1	WASHER #10 FL SS REG TYPE-B	
8	506435D1	1	BRKT-Z,STANDOFF,SH	

Copyright © 2007 AGCO Corporation

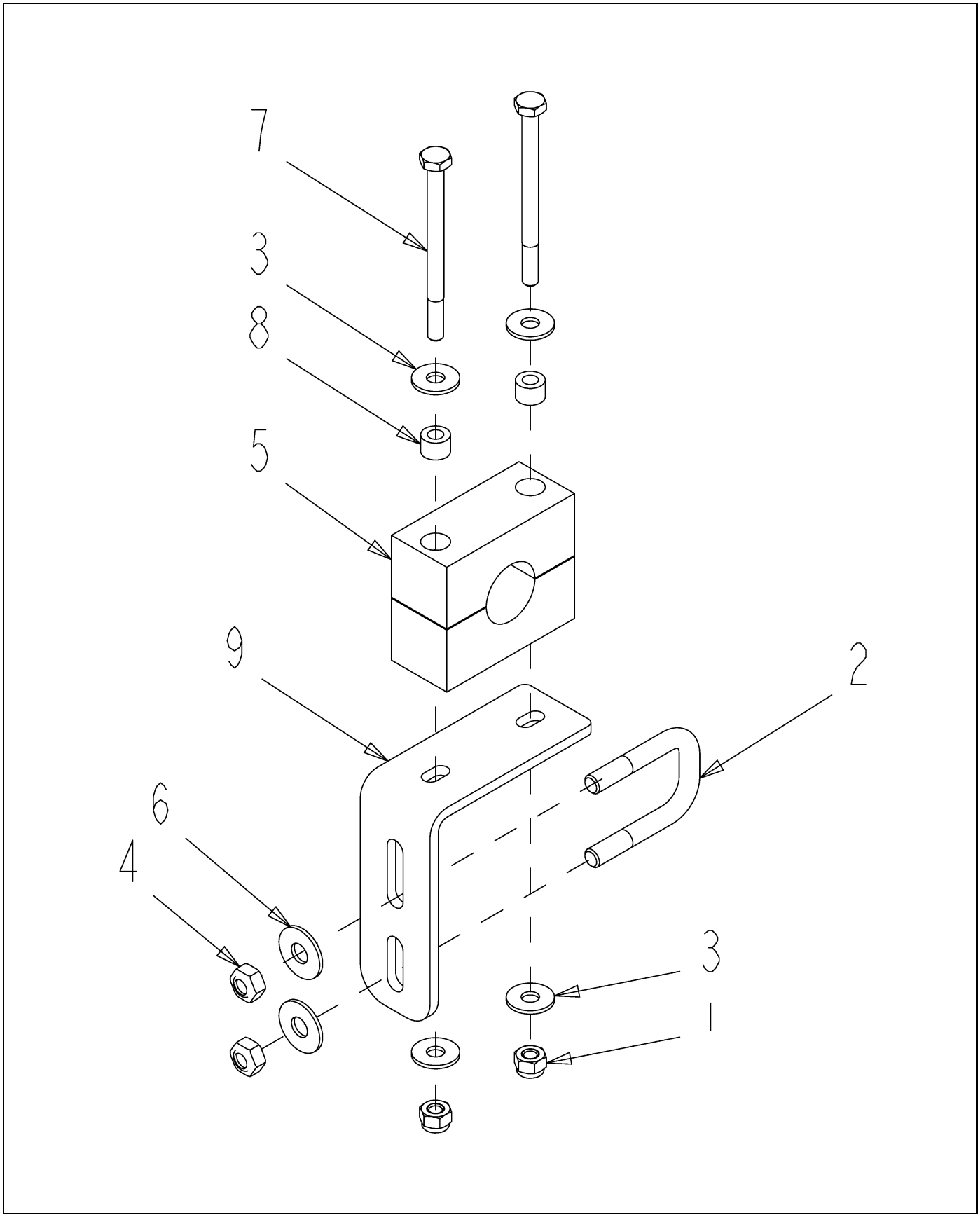

506446D1-01-M981-.TIF

Copyright © 2007 AGCO Corporation

BRKT ASM-L,.75 STAUFF,1.00U

ITEM	PART #	QTY	DESCRIPTION	COMMENTS
1	AG027275	2	NUT 0.25-20NC HEX SS REG NY	
2	WR129144	1	BOLT-U,.31-18X1.06X1.97,SQ,SS	
3	AG515121	4	WASHER 0.25 FL SS REG TYPE-B	
4	AG516403	2	NUT 0.31-18NC HEX SS REG NY	
5	AG518326	1	CLAMP 3/4 INCH PIPE (RTG)	
6	AG562074	2	WASHER 0.31 FL SS REG TYPE-B	
7	AG563061	2	BOLT 0.25-20NCX 3.25 SS HHD	
8	AG609777	2	INSERT STAUFF SPACER	
9	506437D1	1	BRKT-L,STANDOFF,STAUFF	

Copyright © 2007 AGCO Corporation

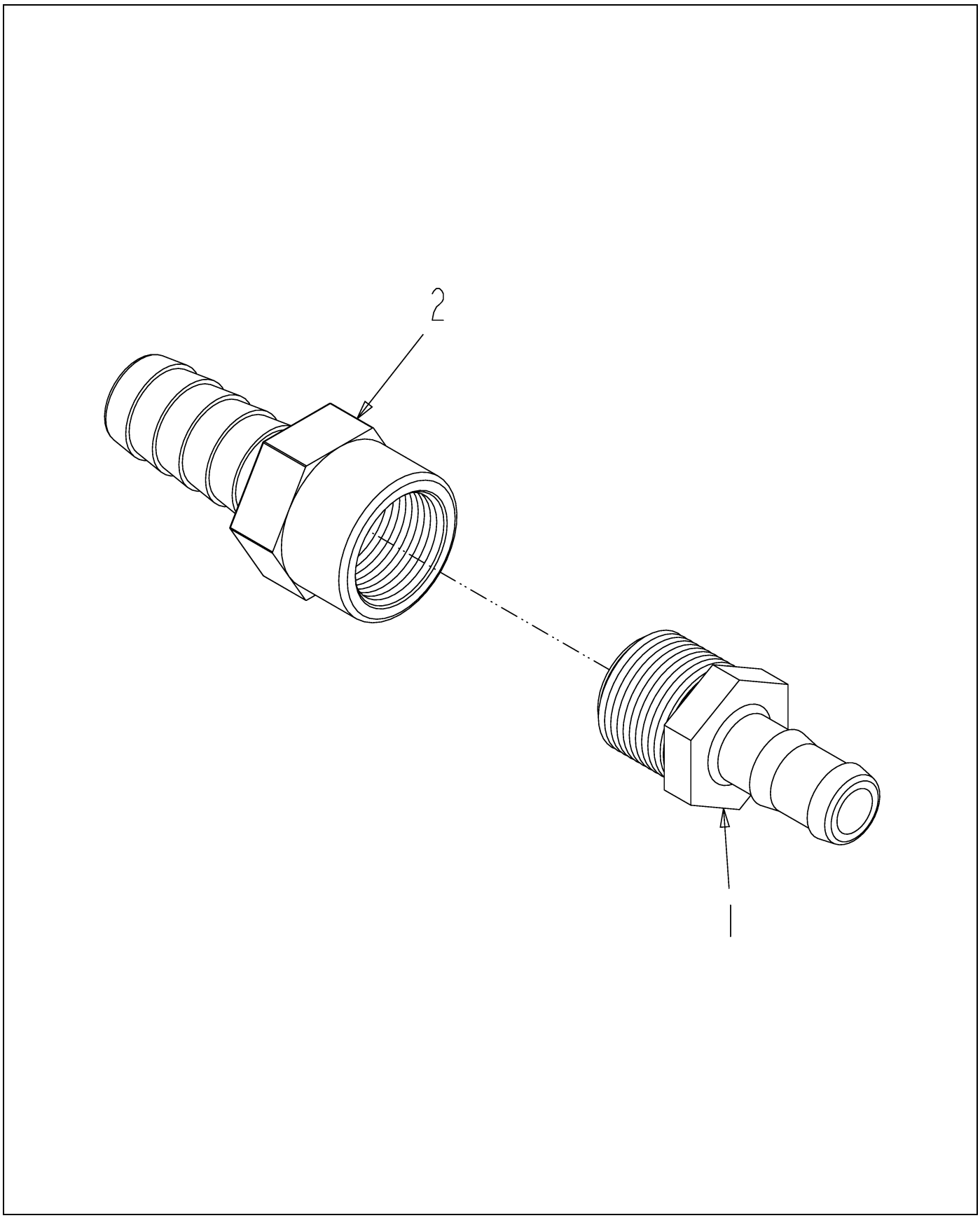

508515D1-01-M891-.TIF

Copyright © 2007 AGCO Corporation

MENDER ASM-HOSE,.75X1.00,PP

ITEM	PART #	QTY	DESCRIPTION	COMMENTS
1	AG051182	1	BARB-HOSE,1.00MNPTX0.75BARB,PP	
2	AG122510	1	BARB-HOSE,1.00FNPTX1.00BARB,PP	
3	AG129187	AR	PIPE SEALANT-FLEX BLACK	

Copyright © 2007 AGCO Corporation

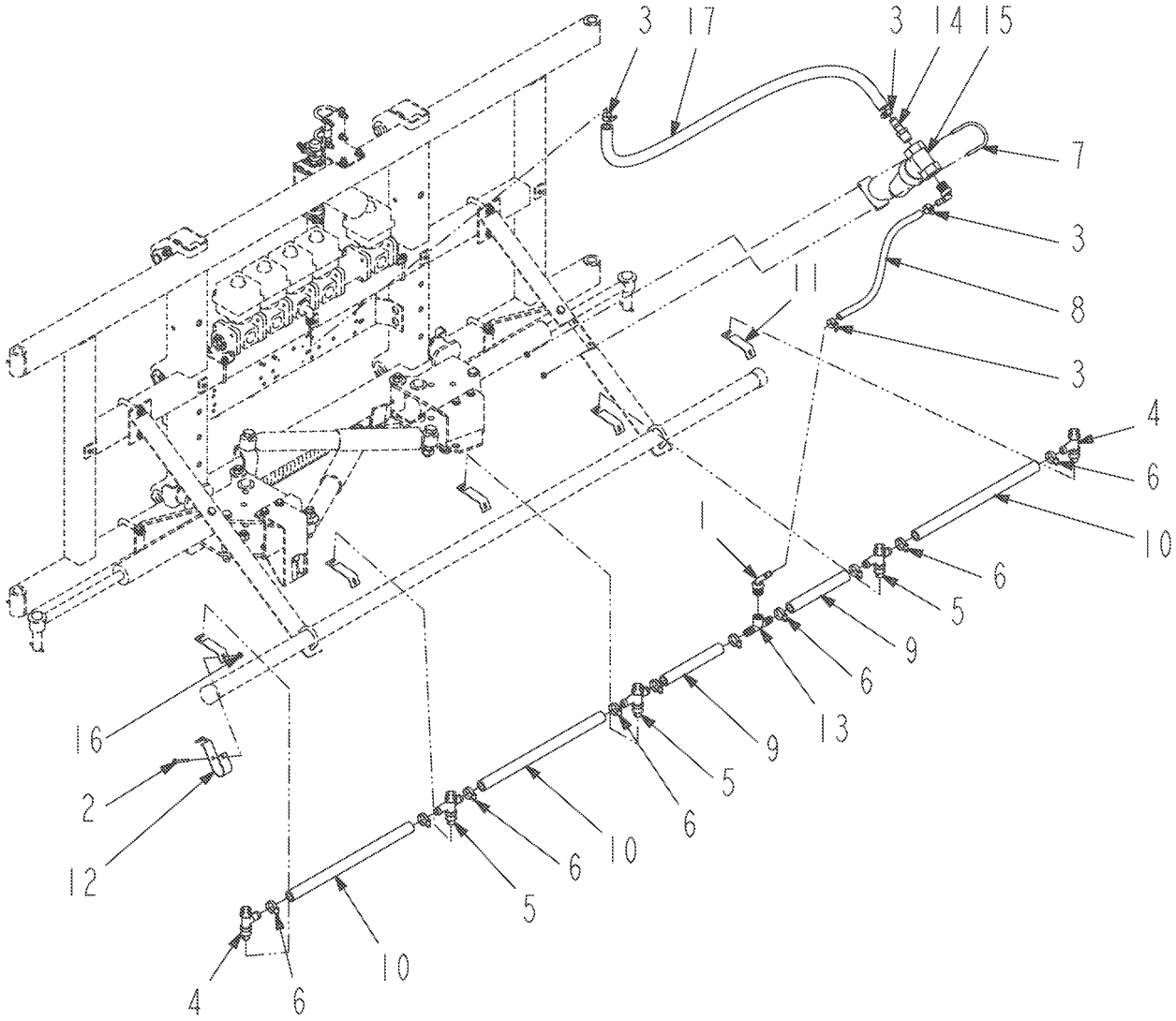

425565-C-L984-.TIF

Copyright © 2007 AGCO Corporation

SPRAY INSTL-CTR MANIFOLD

ITEM	PART #	QTY	DESCRIPTION	COMMENTS
1	AG051141	2	ELBOW 90D 0.75NPTX0.50 BARB PP	
2	WR55170	5	BOLT-CARRIAGE,M6 X 60,1.0	
3	WR55293	4	CLAMP-HOSE,.91 SST	
4	WR132508	2	NOZZLE ASM-SINGLE	SEE PAGE 19-20
5	WR132509	3	NOZZLE ASM-DOUBLE	SEE PAGE 19-21
6	AG561229	10	CLAMP 0.68-1.25 HOSE 12HS	
7	6595786	1	CLAMP-FULL CIRCLE	
8	6595862	1	HOSE-.51 ID 250 PSI X	
9	6617492	2	HOSE	
10	6617498	3	HOSE	
11	6626121	5	BRACKET-UPPER	
12	6626122	5	BRACKET-LOWER	
13	6630914	1	TEE	
14	6660899	1	ADAPTER-12HB/-12MP,PP	
15	6665873	1	FILTER ASSY-BOOM	SEE PAGE 19-53
16	6670124	5	NUT-FLANGE,SERRATED	
17	WR37798	1	HOSE-0.75 X 43.00	

Copyright © 2007 AGCO Corporation

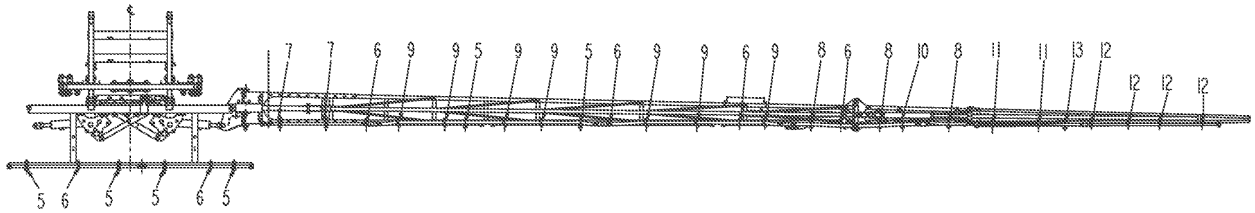

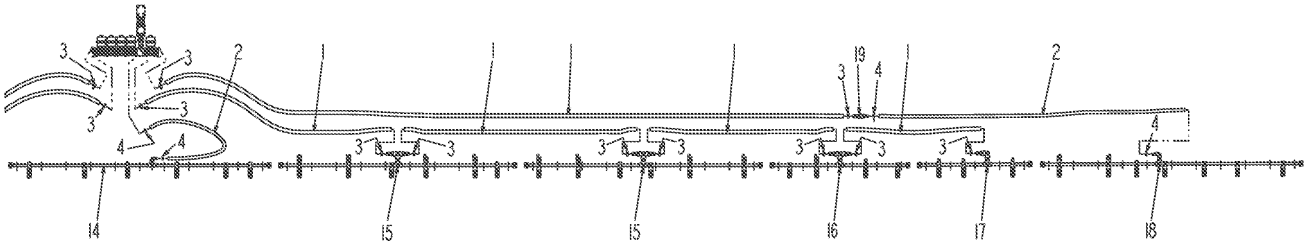

506690D1-02-N183-.TIF

Copyright © 2007 AGCO Corporation

OPT-PP PLMB,SC6080X5X10,ON

ITEM	PART #	QTY	DESCRIPTION	COMMENTS
1	AG511528	-	HOSE 1.00 2BRD EPDM [BULK: 106.584 FT]	
2	AG513385	-	HOSE,MED.PRESS 0.75 2BRD EPDM [BULK: 29.834 FT]	
3	AG561213	20	CLAMP 0.81-1.50 HOSE 16HS	
4	AG561229	6	CLAMP 0.68-1.25 HOSE 12HS	
5	506438D1	8	BRKT ASM-L,.75 STAUFF,STD	SEE PAGE 19-31
6	506439D1	10	BRKT ASM-Z,SH,.75IPS,STD	SEE PAGE 19-32
7	506440D1	4	BRKT ASM-L/LG STR,.75PP,2PCLP	SEE PAGE 19-33
8	506441D1	6	BRKT ASM-L,.75 STAUFF,PCLP,STD	SEE PAGE 19-34
9	506442D1	14	BRKT ASM-Z,LG,.75/1.00IPS,PCLP	SEE PAGE 19-35
10	506443D1	2	BRKT ASM-L,.75 STAUFF,REV PCLP	SEE PAGE 19-36
12	506445D1	8	BRKT ASM-Z,SH,.75IPS,1.00U	SEE PAGE 19-38
13	506446D1	2	BRKT ASM-L,.75 STAUFF,1.00U	SEE PAGE 19-39
14	506691D1	1	PIPE ASM-90D W/ .75HB,11X10,PP	SEE PAGE 19-43
15	506692D1	4	PIPE ASM-T W/2 1.00HB,10X10,PP	SEE PAGE 19-44
16	506693D1	2	PIPE ASM-T W/2 1.00HB, 6X10,PP	SEE PAGE 19-45
17	506694D1	2	PIPE ASM-90D W/1.00HB, 5X10,PP	SEE PAGE 19-46
18	506695D1	2	PIPE ASM-90D W/.75HB,11X10,PP	SEE PAGE 19-47
19	508515D1	2	MENDER ASM-HOSE,.75X1.00,PP	SEE PAGE 19-40

Copyright © 2007 AGCO Corporation

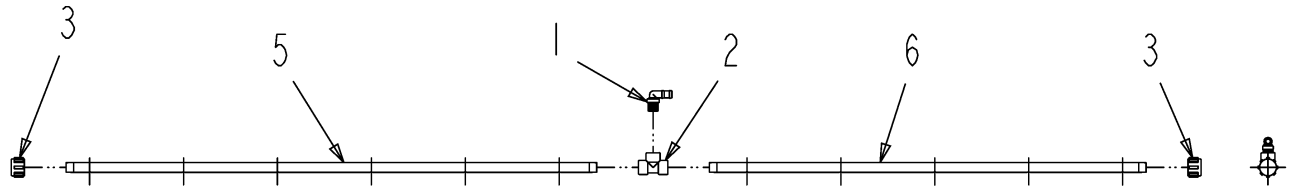

506691D1-01-M891-.TIF

Copyright © 2007 AGCO Corporation

PIPE ASM-90D W/ .75HB,11X10,PP

ITEM	PART #	QTY	DESCRIPTION	COMMENTS
1	AG051142	1	ELBOW 90D 0.75NPTX0.75 BARB PP	
2	AG051161	1	TEE,PIPE,0.75FNPT,PP	
3	AG051535	2	CAP-PIPE,0.75NPT PP	
4	AG129187	AR	PIPE SEALANT-FLEX BLACK	
5	506696D1	1	PIPE-PP,.75,10IN,56.50	
6	506697D1	2	PIPE-PP,.75,10IN,46.50	

Copyright © 2007 AGCO Corporation

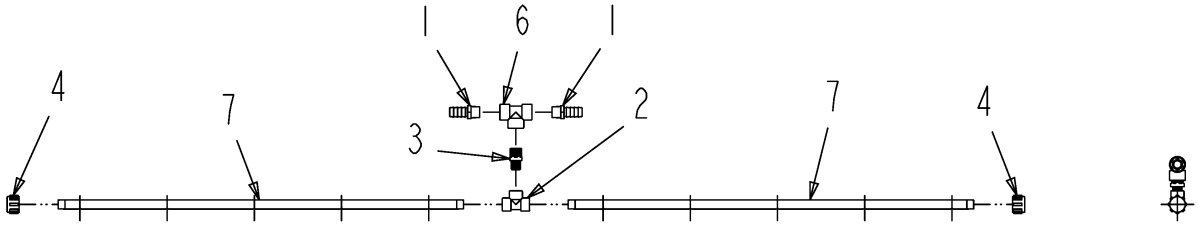

506692D1-01-M891-.TIF

Copyright © 2007 AGCO Corporation

PIPE ASM-T W/2 1.00HB,10X10,PP

ITEM	PART #	QTY	DESCRIPTION	COMMENTS
1	AG051059	2	BARB-HOSE,1.00MNPTX1.00BARB,PP	
2	AG051161	1	TEE,PIPE,0.75FNPT,PP	
3	AG051436	1	NIPPLE POLY RED 1.00 X 0.75	
4	AG051535	2	CAP-PIPE,0.75NPT PP	
5	AG129187	AR	PIPE SEALANT-FLEX BLACK	
6	AG516405	1	TEE,PIPE,1.00FNPT,PP	
7	506697D1	2	PIPE-PP,.75,10IN,46.50	

Copyright © 2007 AGCO Corporation

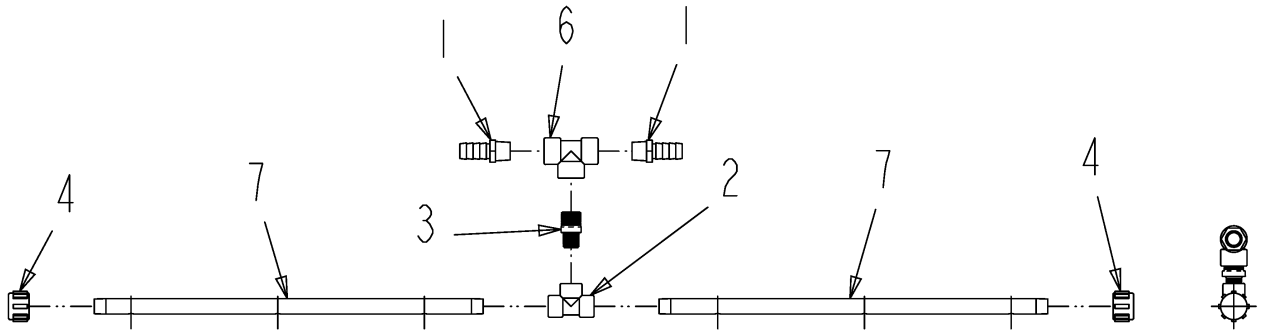

506693D1-01-M981-.TIF

Copyright © 2007 AGCO Corporation

PIPE ASM-T W/2 1.00HB, 6X10,PP

ITEM	PART #	QTY	DESCRIPTION	COMMENTS
1	AG051059	2	BARB-HOSE,1.00MNPTX1.00BARB,PP	
2	AG051161	1	TEE,PIPE,0.75FNPT,PP	
3	AG051436	1	NIPPLE POLY RED 1.00 X 0.75	
4	AG051535	2	CAP-PIPE,0.75NPT PP	
5	AG129187	AR	PIPE SEALANT-FLEX BLACK	
6	AG516405	1	TEE,PIPE,1.00FNPT,PP	
7	506698D1	2	PIPE-PP,.75,10IN,26.50	

Copyright © 2007 AGCO Corporation

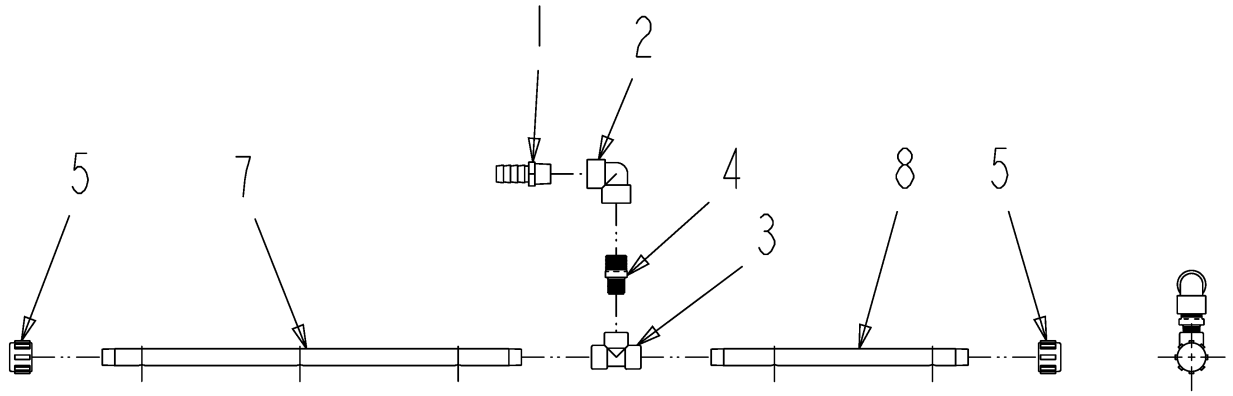

506694D1-01-M981-.TIF

Copyright © 2007 AGCO Corporation

PIPE ASM-90D W/1.00HB, 5X10,PP

ITEM	PART #	QTY	DESCRIPTION	COMMENTS
1	AG051059	1	BARB-HOSE,1.00MNPTX1.00BARB,PP	
2	AG051127	1	ELBOW-PIPE,1.00FNPT,90D,PP	
3	AG051161	1	TEE,PIPE,0.75FNPT,PP	
4	AG051436	1	NIPPLE POLY RED 1.00 X 0.75	
5	AG051535	2	CAP-PIPE,0.75NPT PP	
6	AG129187	AR	PIPE SEALANT-FLEX BLACK	
7	506698D1	1	PIPE-PP,.75,10IN,26.50	
8	506699D1	1	PIPE-PP,.75,10IN,16.25	

Copyright © 2007 AGCO Corporation

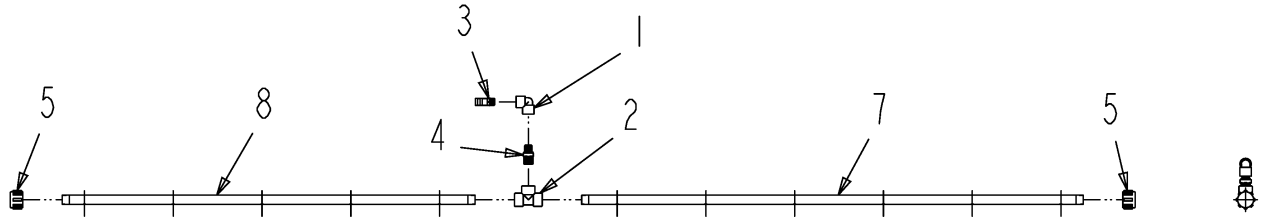

506695D1-01-M891-.TIF

Copyright © 2007 AGCO Corporation

PIPE ASM-90D W/.75HB,11X10,PP

ITEM	PART #	QTY	DESCRIPTION	COMMENTS
1	AG051125	1	ELBOW-PIPE,0.50FNPT,90D,PP	
2	AG051161	1	TEE,PIPE,0.75FNPT,PP	
3	AG051177	1	BARB-HOSE,0.50MNPTX0.75BARB,PP	
4	AG051435	1	NIPPLE RED POLY 0.75 X 0.50	
5	AG051535	2	CAP-PIPE,0.75NPT PP	
6	AG129187	AR	PIPE SEALANT-FLEX BLACK	
7	506696D1	1	PIPE-PP,.75,10IN,56.50	
8	506697D1	1	PIPE-PP,.75,10IN,46.50	

Copyright © 2007 AGCO Corporation

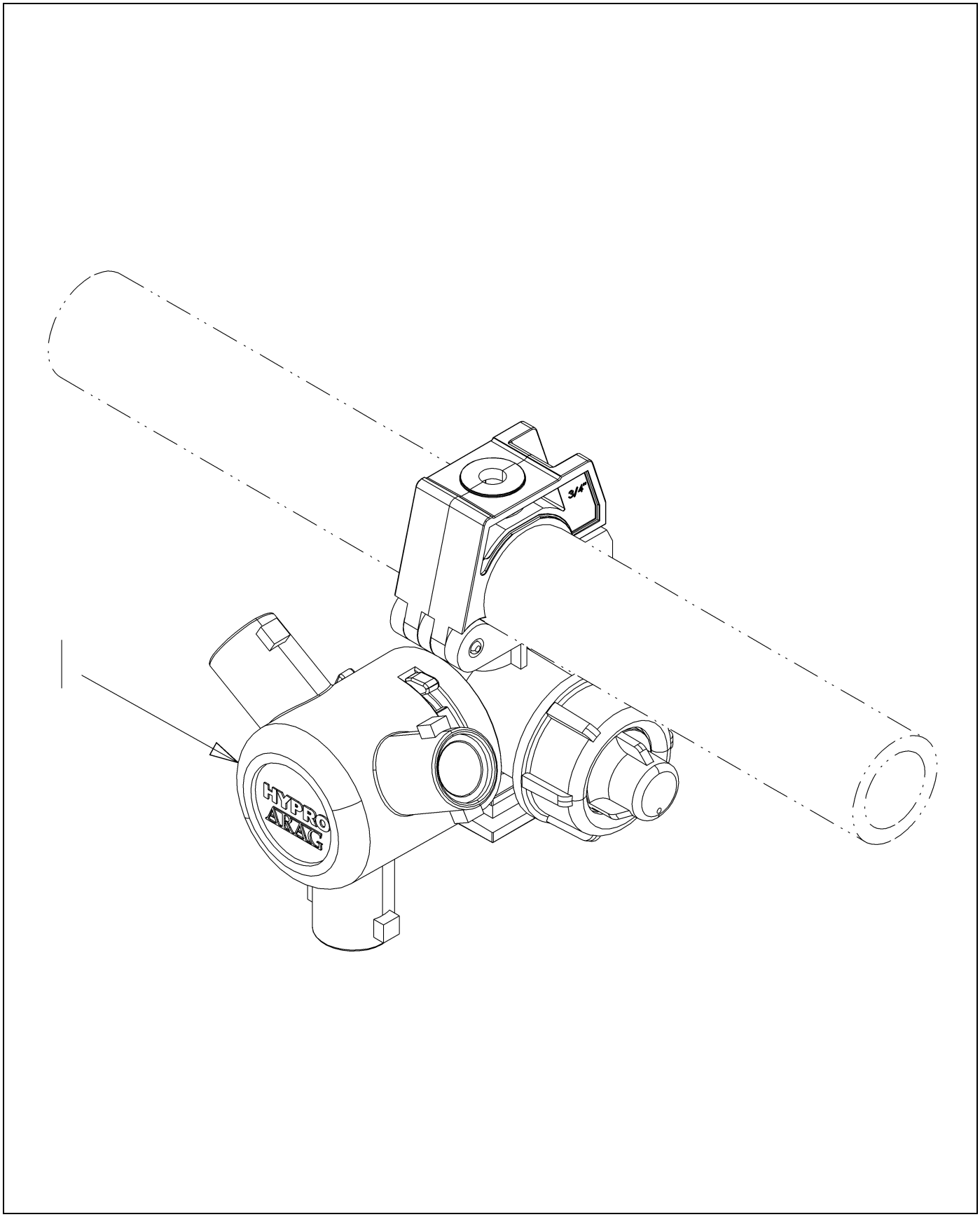

507088D1-01-M883-.TIF

Copyright © 2007 AGCO Corporation

OPT-NOZZLE,3WAY,RTRY,80X10,0N

ITEM	PART #	QTY	DESCRIPTION	COMMENTS
1	AG136745	95	BODY-NOZZLE,3 WAY,RTRY,.75	[A] SEE PAGE 19-49
	FOOTNOTE [A]		AG056386 O-RING USED FOR TURRET AND CLAMP.	

Copyright © 2007 AGCO Corporation

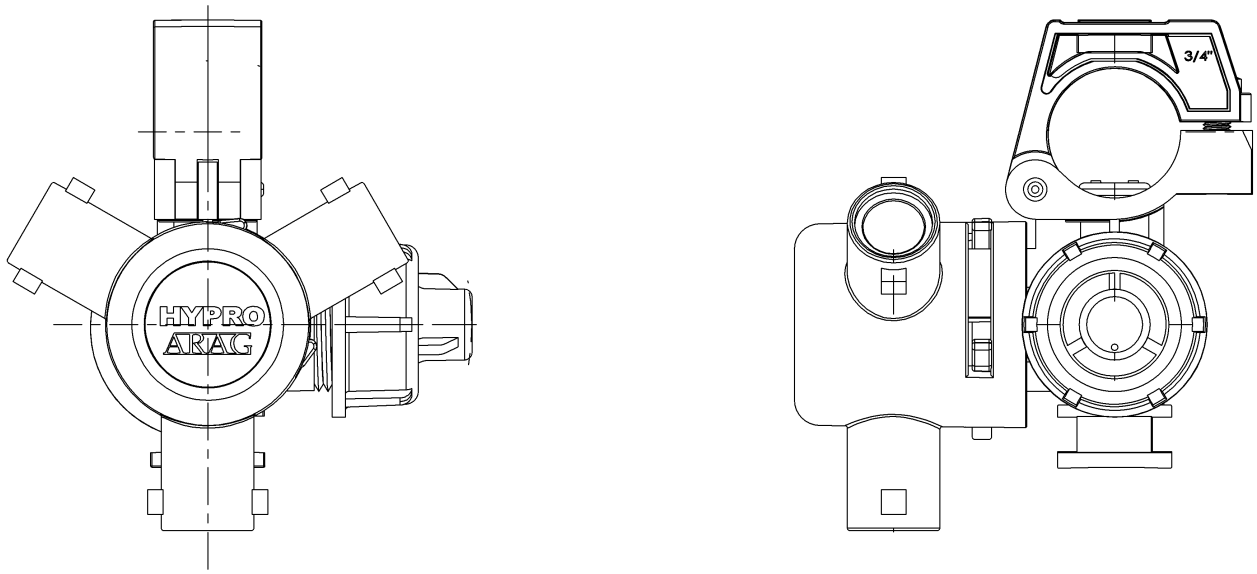

136745-01-M883-.TIF

Copyright © 2007 AGCO Corporation

BODY-NOZZLE,3 WAY,RTRY,.75

ITEM	PART #	QTY	DESCRIPTION	COMMENTS
REF	AG330430	1	CAP/W/RED PLUNGER	
	FOOTNOTE		AG056386 O-RING USED FOR TURRET AND CLAMP.	

Copyright © 2007 AGCO Corporation

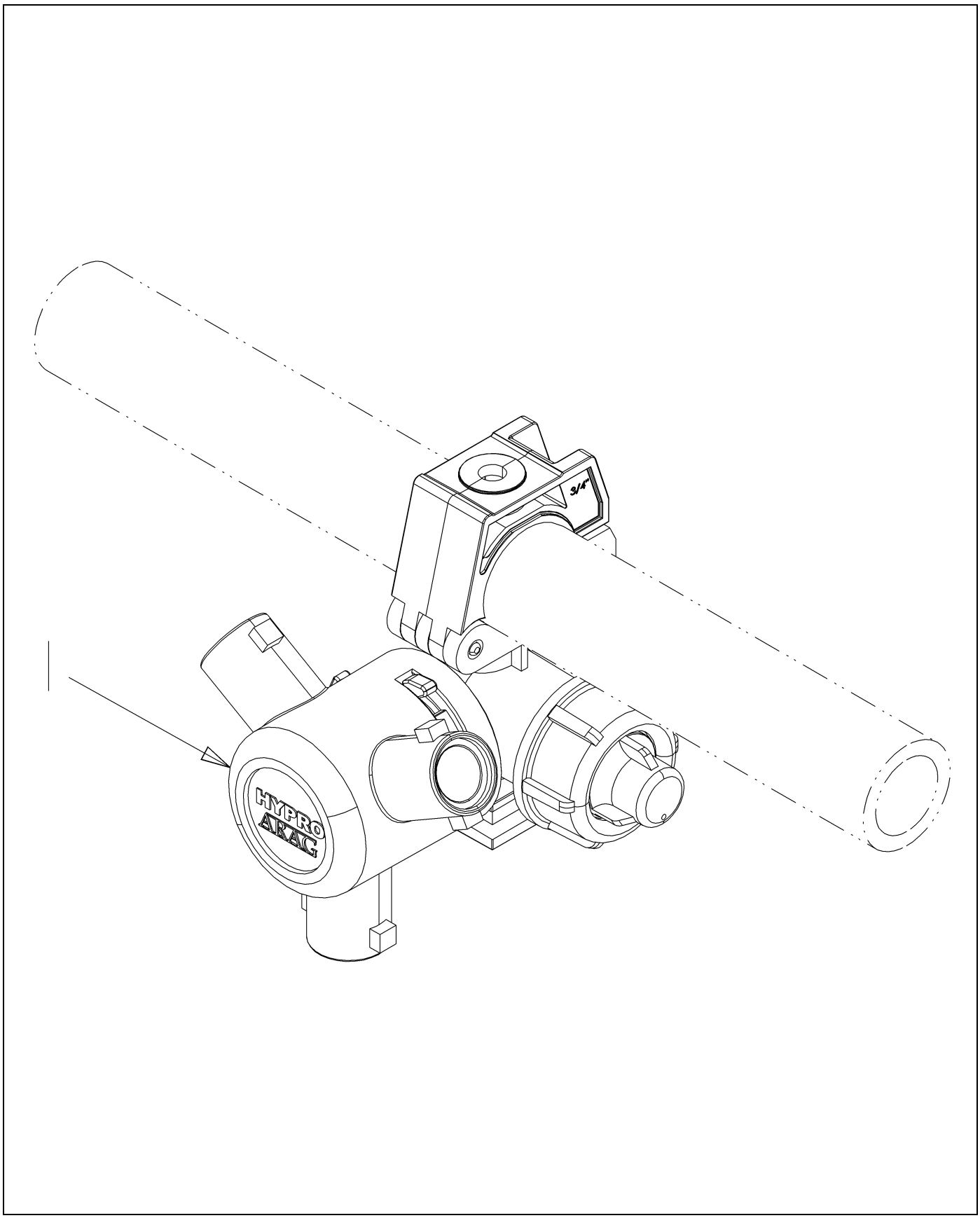

507089D1-01-M883-.TIF

Copyright © 2007 AGCO Corporation

OPT-NOZZLE,3WAY,RTRY,80X20,OFF

ITEM	PART #	QTY	DESCRIPTION	COMMENTS
1	AG136745	48	BODY-NOZZLE,3 WAY,RTRY,.75	[A] SEE PAGE 19-49
	FOOTNOTE [A]		AG056386 O-RING USED FOR TURRET AND CLAMP.	

Copyright © 2007 AGCO Corporation

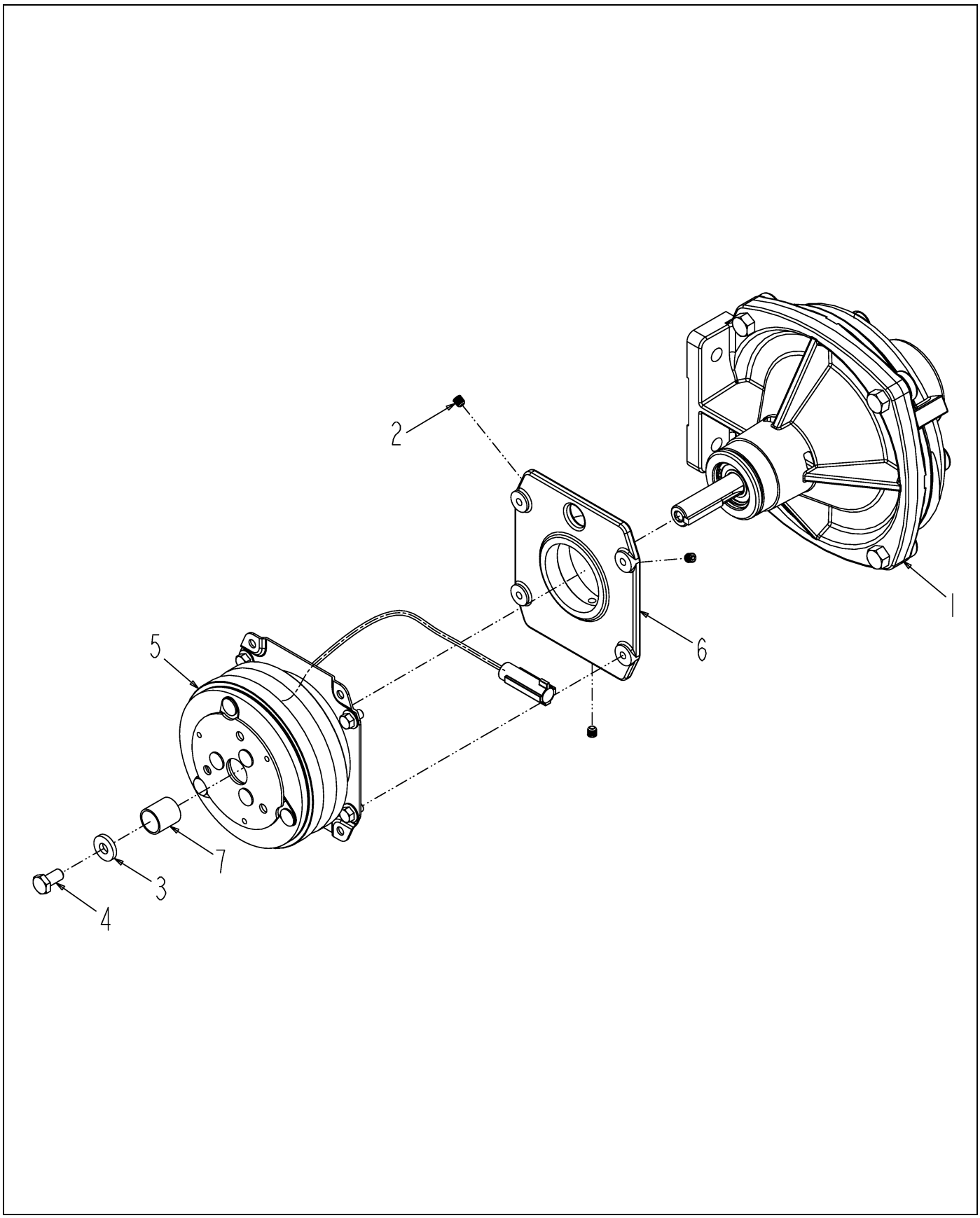

515284D1-01-N892-.TIF

Copyright © 2007 AGCO Corporation

PUMP ASM- SPRAY W/CLUTCH

ITEM	PART #	QTY	DESCRIPTION	COMMENTS
1	6668810	1	PUMP-SPRAY	[A] SEE PAGE 19-52
2	70915794	3	SET/SCREW-HEX SOCKET CUP PT	
3	401463X1	1	WASHER-FLAT 3/4OD X5/16ID X1/8	
4	40552PF	1	SCREW/HEX5/16-18X5/8GR5	
5	515285D1	1	CLUTCH ASM - ELECTRIC	
6	515286D1	1	FLANGE - CLUTCH MOUNT	
7	516847D1	1	SLEEVE-CLUTCH MOUNT	
	FOOTNOTE [A]		ITEMS 7 & 9 CANNOT BE PURCHASED INDIVIDUALLY BUT ARE INCLUDED IN THE SEAL KIT.	
	FOOTNOTE		EFF S/N S4455ENS8A1079, S4455LNS8A1080, S4655JNS8A1103, S4655KNS8A1102, S4655HNS8M1032, S4655ENS8M1033	

Copyright © 2007 AGCO Corporation

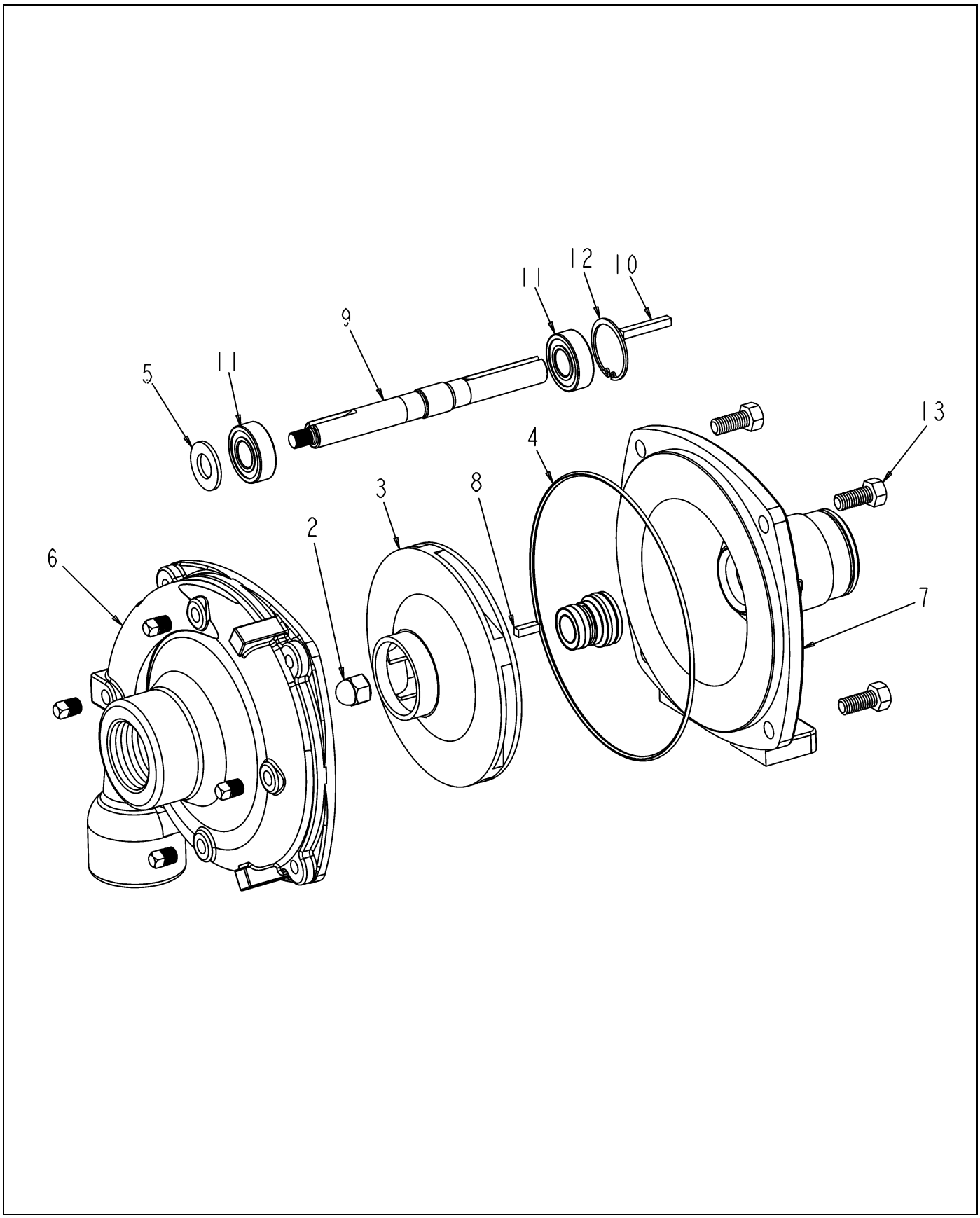

6668810-A.TIF

Copyright © 2007 AGCO Corporation

ITEM	PART #	QTY	DESCRIPTION	COMMENTS
1	6670680	1	PUMP, SPRAY	
2	6661125	1	NUT	
3	6662772	1	IMPELLER	
4	6616209	1	O-RING	
5	WR122586	1	SLINGER RING	
6	6662773	1	INLET CASTING	
7	6662771	1	FLANGE	
8	6661126	1	KEY	
9	6620675	1	SHAFT	
10	WR122590	1	KEY 3/16X3/16X1.25	
11	6610653	2	BEARING	
12	6616767	1	RING	
13	AG551503	4	BOLT 0.37-16NCX 0.75 G5 ZN HHD	
14	6661127	4	PLUG	
15	AG122578	1	SEAL KIT	
	FOOTNOTE		ITEMS 7 & 9 CANNOT BE PURCHASED INDIVIDUALLY BUT ARE INCLUDED IN THE SEAL KIT.	

Copyright © 2007 AGCO Corporation

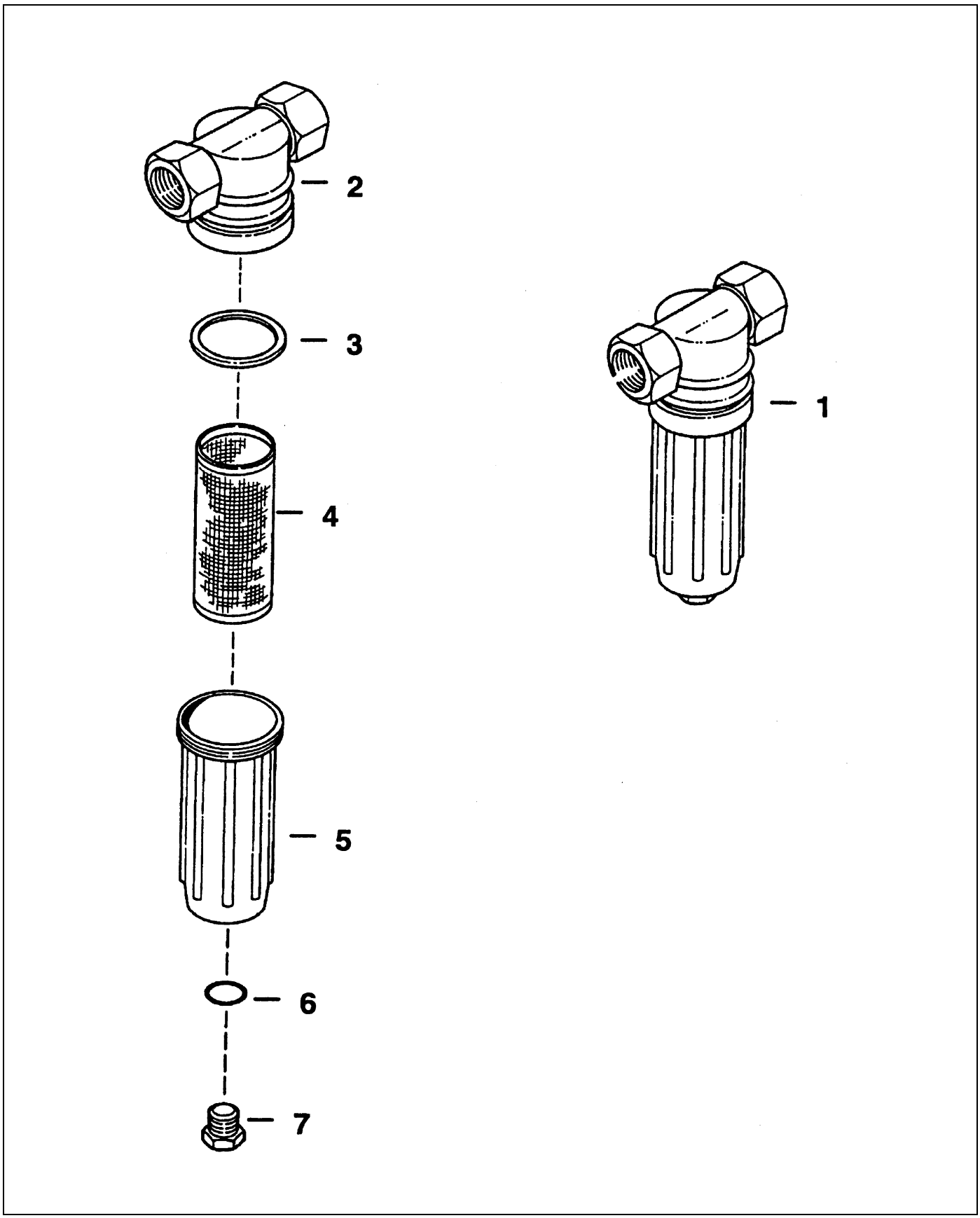

6665873.TIF

Copyright © 2007 AGCO Corporation

FILTER ASSY-BOOM

ITEM	PART #	QTY	DESCRIPTION	COMMENTS
2	6666844	1	HEAD	
3	6666845	1	GASKET	
4	6667717	1	SCREEN 80 MESH	
5	6666847	1	BOWL	
6	6666848	1	O-RING	
7	6666849	1	PLUG	

Copyright © 2007 AGCO Corporation

OPT-GPS,PHOENIX 200,SC 4000	20-1
OPT-GPS,PHOENIX 200,SC 4000	20-2
KIT-GPS ANTENNA MOUNT,SC	20-3
PICT-GPS ANTENNA MOUNTING	20-4
OPT-GPS,RPR 100S, SC 4000	20-5
OPT-GPS,RPR 100S, SC 4000	20-6
INSTL-RGL600T,3/4X50 SC	20-7
INSTL-RGL600T,3/4X50 SC	20-8
CONTROLLER INSTL-RAVEN 460,WF	20-9
TAG ASSY, CALIBRATION	20-10
CONTROLLER INSTL-RAVEN 460,WF	20-11
FLWMTR KIT-2.00SP FLG, RFM60P	20-12
FLWMTR KIT-2.00SP FLG, RFM60P	20-13

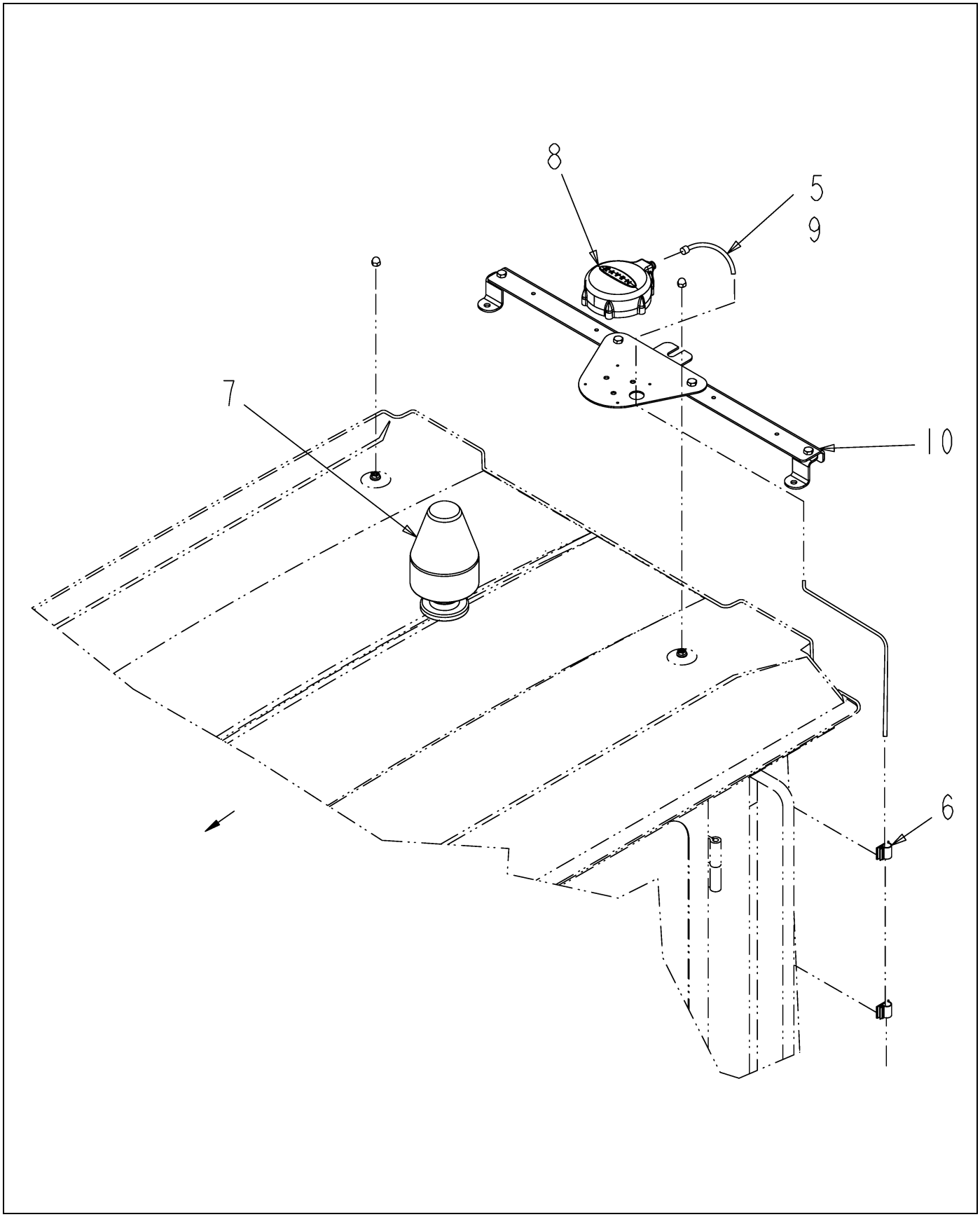

516945D1-01-R107-01.TIF

Copyright © 2007 AGCO Corporation

OPT-GPS,PHOENIX 200,SC 4000

ITEM	PART #	QTY	DESCRIPTION	COMMENTS
5	AG553557	AR	TIE CABLE 7.37 .06-1.37 BLACK	
6	AG562938	4	CABLE CLIP .50 ADH BACK SVR MT	
7	514828D1	1	KIT-GPS,PHOENIX 200	
8	514829D1	-	ANTENNA-GPS,PHOENIX 200	
9	514830D1	-	CABLE-GPS,PHOENIX 200	
10	WR38799	-	KIT-GPS ANTENNA MOUNT,SC	SEE PAGE 20-3
	FOOTNOTE		EFFECTIVE Txx1001	

Copyright © 2007 AGCO Corporation

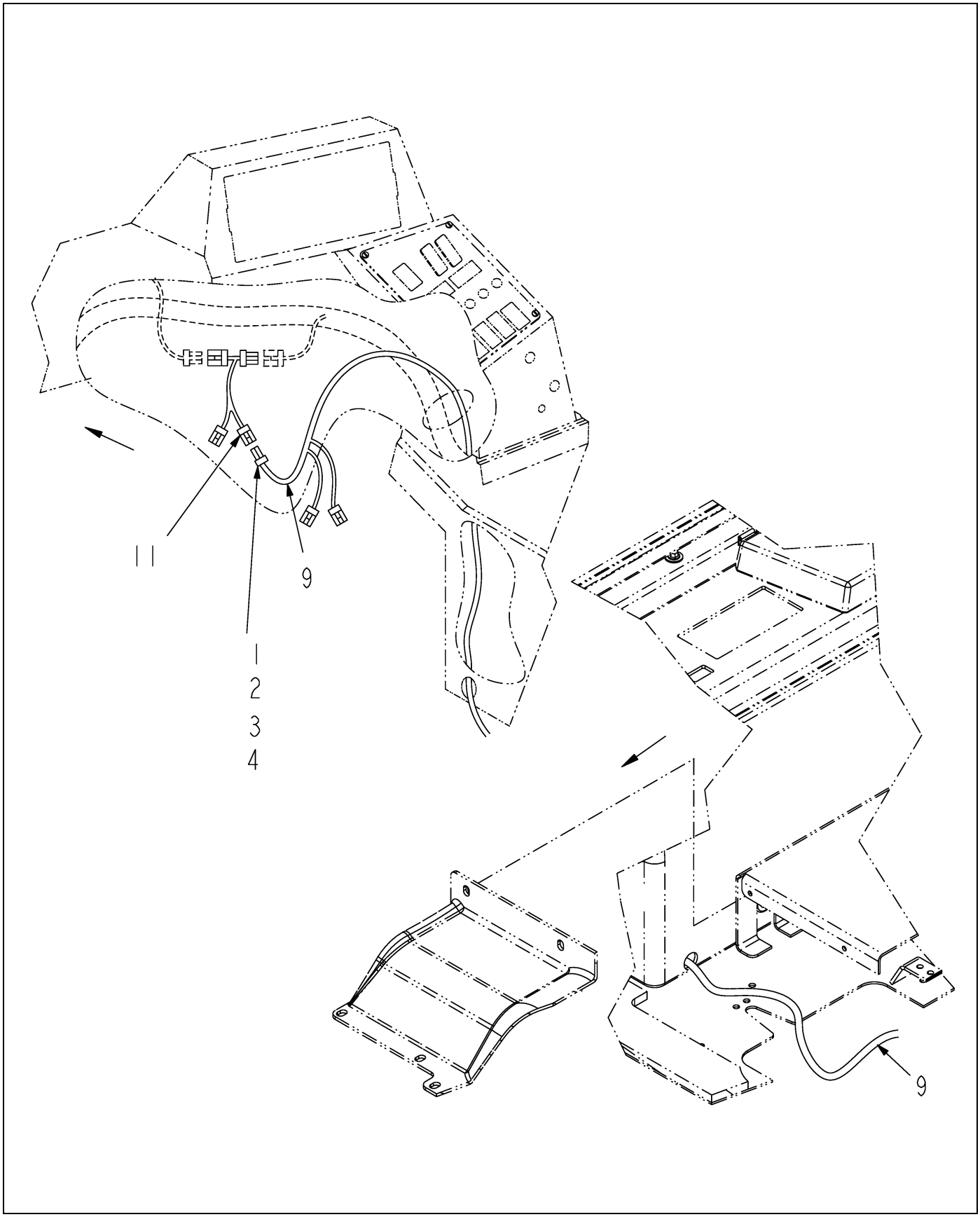

516945D1-01-R107-02.TIF

Copyright © 2007 AGCO Corporation

OPT-GPS,PHOENIX 200,SC 4000

ITEM	PART #	QTY	DESCRIPTION	COMMENTS
1	AG517591	2	TERM METRI-PACK F150/16-18 GA	
2	AG517594	2	SEAL CABLE METRI-PACK 150 RED	
3	AG517597	1	CONNECTOR FE 2 WAY 150 SEALED	
4	AG520264	1	LOCK-METRIPACK,150/2 WAY	
9	514830D1	-	CABLE-GPS,PHOENIX 200	
11	WR38800	1	WIRE ASSY-GPS RECEIVR PNR	
	FOOTNOTE		EFFECTIVE Txx1001	

Copyright © 2007 AGCO Corporation

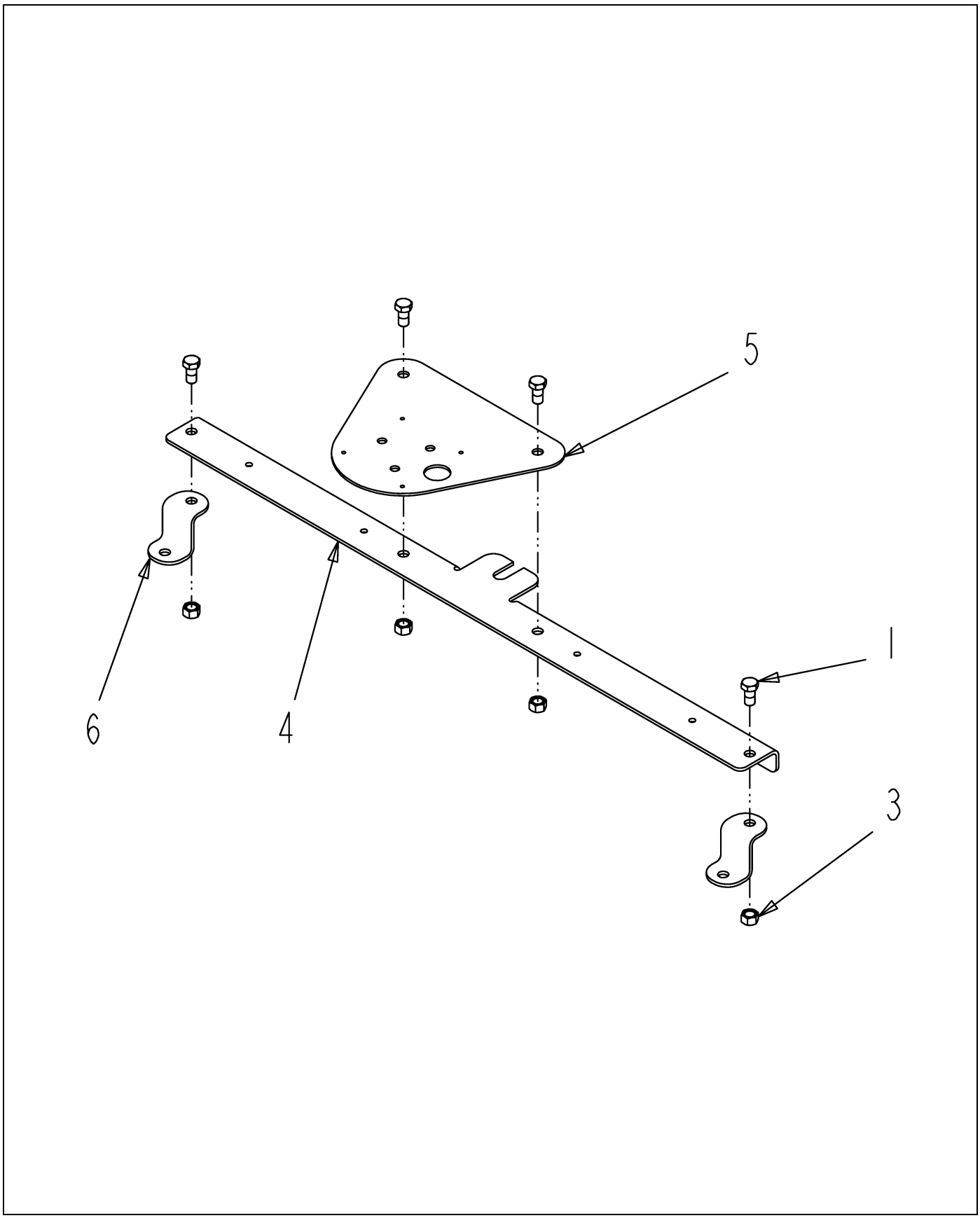

WR38799-02.TIF

Copyright © 2007 AGCO Corporation

KIT-GPS ANTENNA MOUNT,SC

ITEM	PART #	QTY	DESCRIPTION	COMMENTS
1	AG551503	4	BOLT 0.37-16NCX 0.75 G5 ZN HHD	
2	AG553557	3	TIE CABLE 7.37 .06-1.37 BLACK	
3	AG601411	4	NUT 0.37-16NC HEX ZN REG NY	
4	6803920	1	BAR-REAR	
5	WR37842	1	MOUNT-GPS ANTENNA	
6	WR37843	2	STANDOFF-ANTENNA MOUNT,	
7	WR38850	1	PICT-GPS ANTENNA MOUNTING	[A] SEE PAGE 20-4
	FOOTNOTE [A]		ITEMS 1-6 ARE INCLUDED IN THE KIT.	

Copyright © 2007 AGCO Corporation

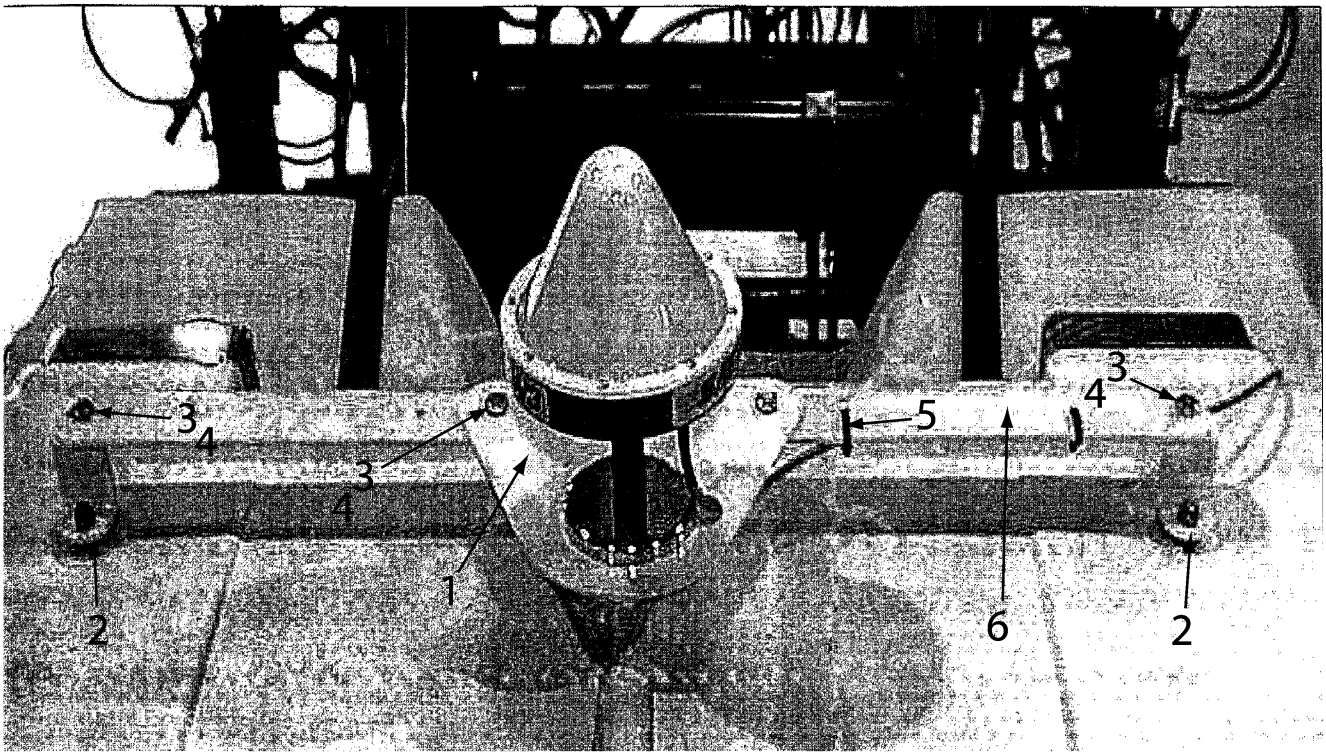

WR38850.tif

Copyright © 2007 AGCO Corporation

ITEM	PART #	QTY	DESCRIPTION	COMMENTS
REF	WR38799	-	KIT-GPS ANTENNA MOUNT,SC	SEE PAGE 20-3
	FOOTNOTE		ITEMS 1-6 ARE INCLUDED IN THE KIT.	

Copyright © 2007 AGCO Corporation

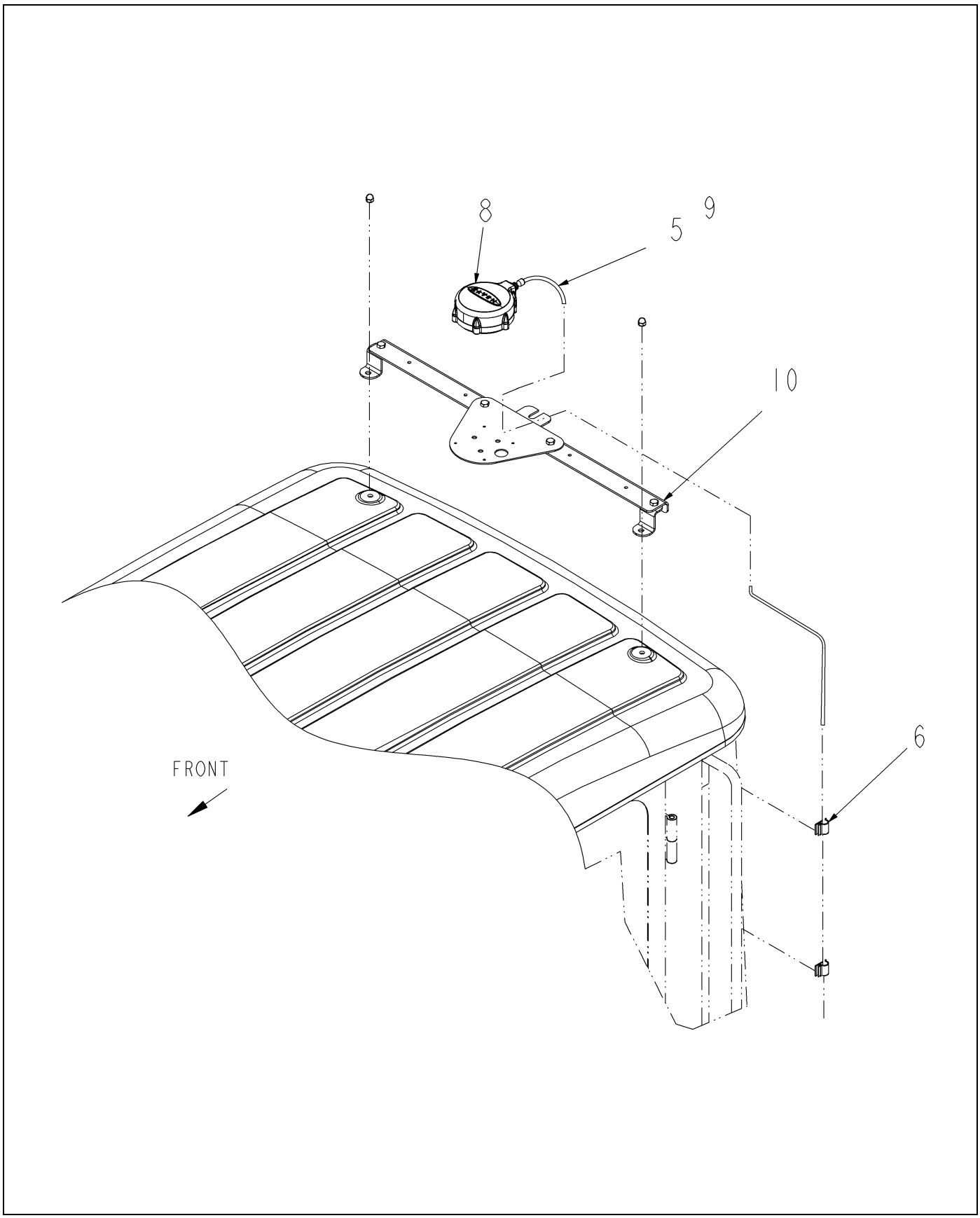

516946D1-02-R219-01.TIF

Copyright © 2007 AGCO Corporation

ITEM	PART #	QTY	DESCRIPTION	COMMENTS
5	AG553557	AR	TIE CABLE 7.37 .06-1.37 BLACK	
6	AG562938	4	CABLE CLIP .50 ADH BACK SVR MT	
7	514832D1	1	KIT-GPS,RPR 100S	
8	514833D1	-	ANTENNA-GPS,RPR 100S	
9	514834D1	-	CABLE-GPS,RPR 100S	
10	WR38799	-	KIT-GPS ANTENNA MOUNT,SC	SEE PAGE 20-3
	FOOTNOTE		EFFECTIVE Txx1001	

Copyright © 2007 AGCO Corporation

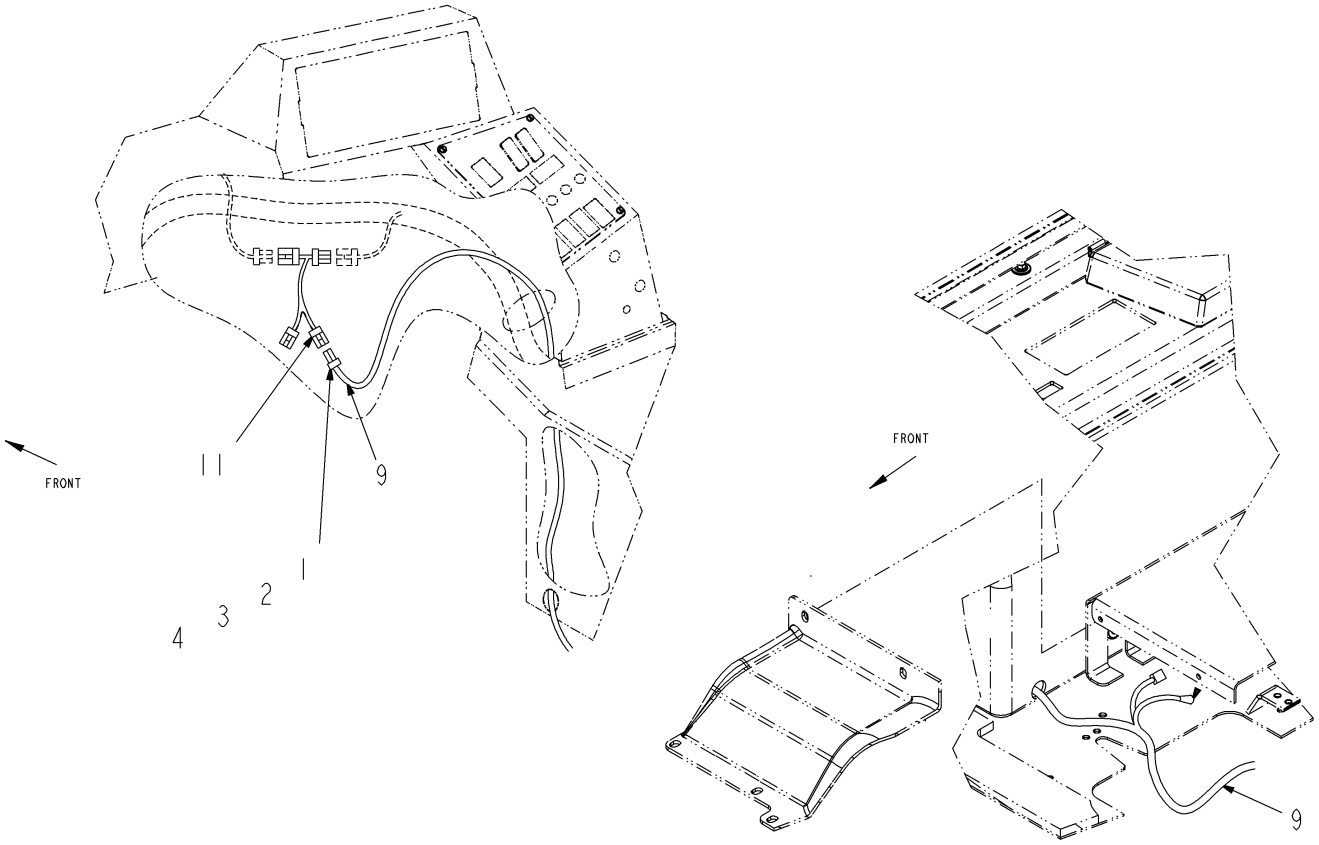

516946D1-02-R219-02.TIF

Copyright © 2007 AGCO Corporation

ITEM	PART #	QTY	DESCRIPTION	COMMENTS
1	AG517591	2	TERM METRI-PACK F150/16-18 GA	
2	AG517594	2	SEAL CABLE METRI-PACK 150 RED	
3	AG517597	1	CONNECTOR FE 2 WAY 150 SEALED	
4	AG520264	1	LOCK-METRIPACK,150/2 WAY	
9	514834D1	-	CABLE-GPS,RPR 100S	
11	WR38800	1	WIRE ASSY-GPS RECEIVR PNR	
	FOOTNOTE		EFFECTIVE Txx1001	

Copyright © 2007 AGCO Corporation

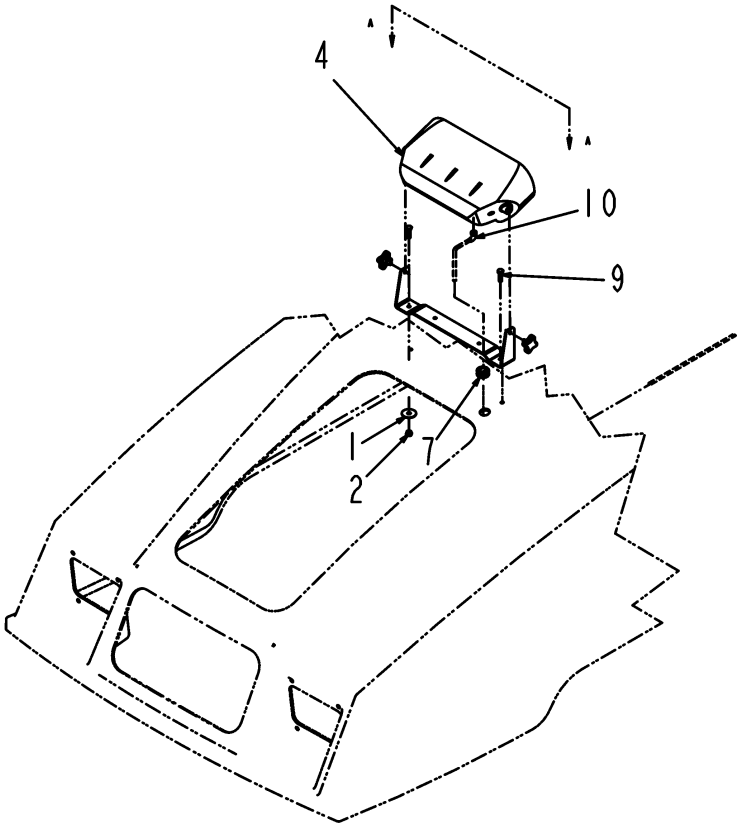

504289D1-01-M589-01.TIF

Copyright © 2007 AGCO Corporation

INSTL-RGL600T,3/4X50 SC

ITEM	PART #	QTY	DESCRIPTION	COMMENTS
1	WR10436	2	WASHER-FENDER, 1/4 ID	
2	AG027275	2	NUT 0.25-20NC HEX SS REG NY	
3	AG133611	-	KIT-LIGHTBAR,RGL600T	SEE PAGE 15-1
4	AG133612	-	LIGHTBAR-RGL600T	
7	AG522907	1	GROMMET-RUBBER	
8	AG553557	AR	TIE CABLE 7.37 .06-1.37 BLACK	
9	AG562064	2	BOLT 0.25-20NCX 1.00 SS HHD	
10	AG610787	-	CABLE-LIGHTBAR,28 FT	

Copyright © 2007 AGCO Corporation

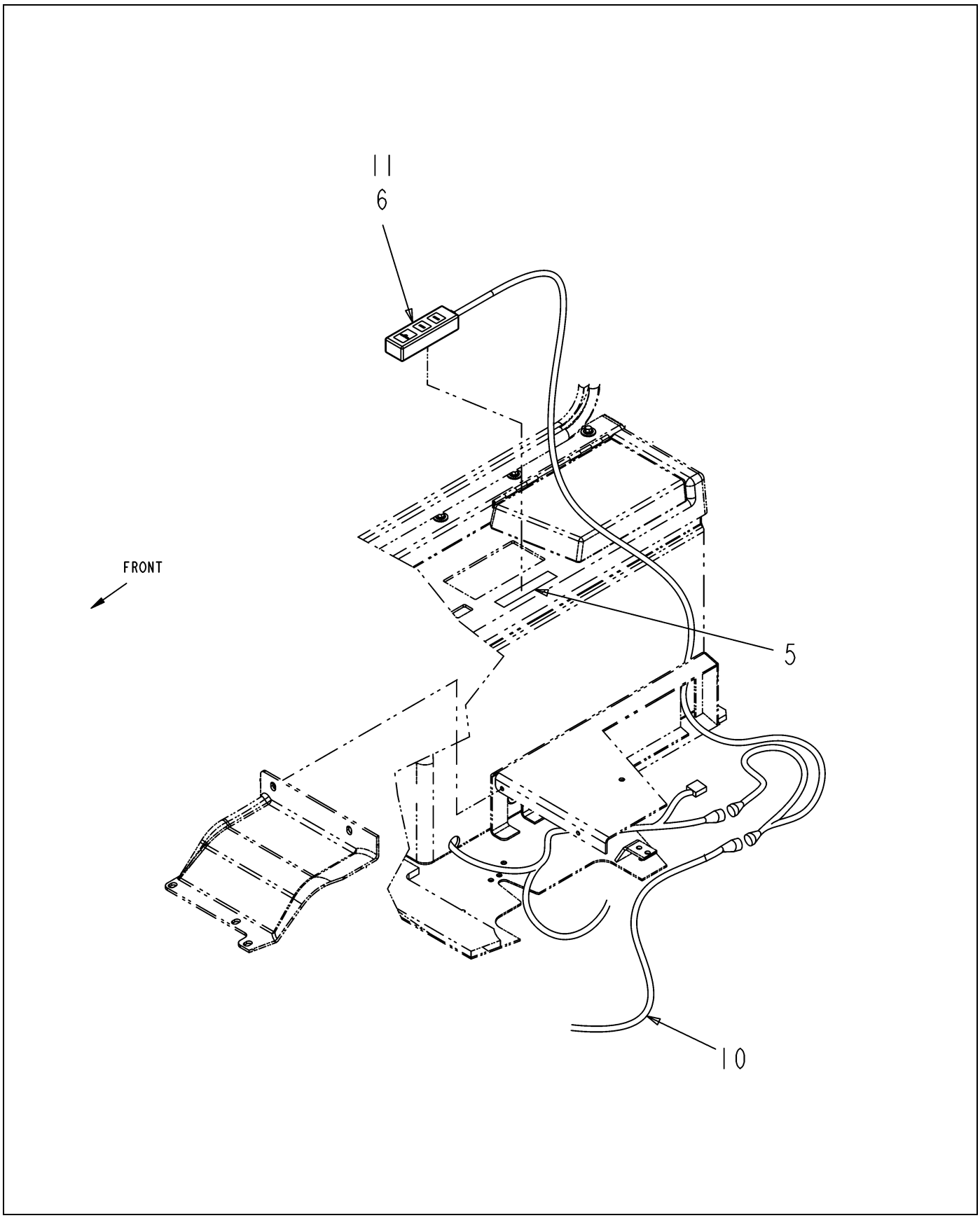

504289D1-01-M589-02.TIF

Copyright © 2007 AGCO Corporation

ITEM	PART #	QTY	DESCRIPTION	COMMENTS
5	AG515927	-	FASTNR VELCRO HOOK BLK 1X25YDS [BULK: 0.330 FT]	
6	AG515928	-	FASTNR VELCRO LOOP BLK 1X25YDS [BULK: 0.330 FT]	
10	AG610787	-	CABLE-LIGHTBAR,28 FT	
11	AG610788	-	BOX-BUTTON,LIGHTBAR	

Copyright © 2007 AGCO Corporation

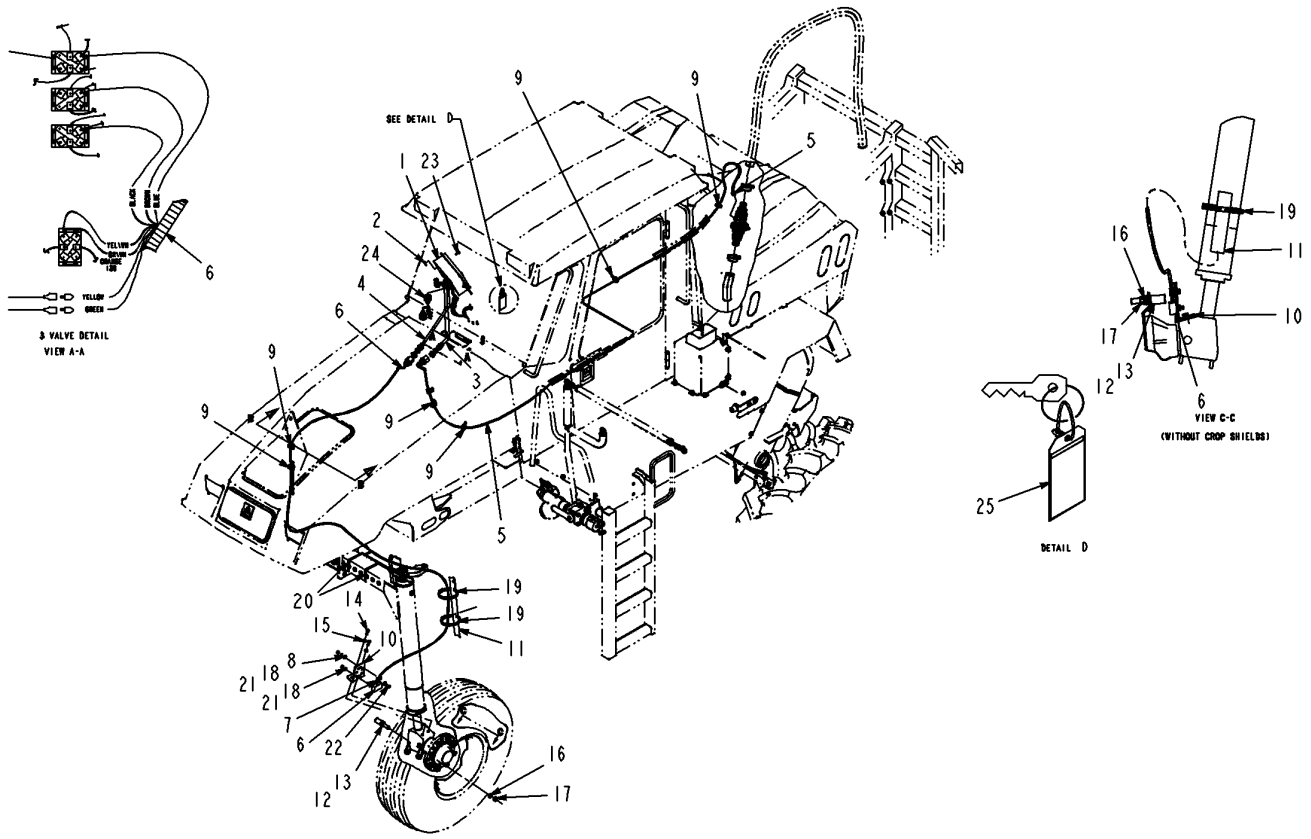

505464D1-06-R485-.TIF

Copyright © 2007 AGCO Corporation

CONTROLLER INSTL-RAVEN 460,WF

ITEM	PART #	QTY	DESCRIPTION	COMMENTS
1	WR56031	1	CONTROLLER RAVEN	
2	6662701	2	STRAP RETAINER	
3	6662294	1	CABLE ASSY	
4	6662295	1	CABLE-SPEED,24 IN	
5	6666305	1	CABLE-FLOW,15´	
6	6662297	1	SENSOR-SPEED	
8	AG515121	2	WASHER 0.25 FL SS REG TYPE-B	
9	AG553557	6	TIE CABLE 7.37 .06-1.37 BLACK	
10	6627046	1	BRACKET	
11	6627047	1	SHIELD-CABLE	
12	6662702	4	MAGNET ASSY-RED	
13	6662703	4	MAGNET ASSY-BLACK	
14	WR55036	2	SCREW-CAP HEX M8 X 25	
15	AG561679	2	WASHER LOCK M8 ZN	
16	AG550264	8	WASHER 0.50 LK ZN REG	
17	AG550124	8	NUT 0.50-13NC HEX ZN REG	
18	WR55409	1	INSULATED CLAMP	
19	WR55298	2	CLAMP-HOSE,4 1/2 SST	
20	AG562496	2	TIE CABLE 15.0 .18-4.00 BLACK	
21	6662922	2	SCREW,PAN HEAD	
22	AG562054	1	BOLT 0.25-20NCX 0.75 SS HHD	
24	WR121947	1	CABLE ADAPTER	
25	6618366	1	TAG ASSY, CALIBRATION	SEE PAGE 20-10

Copyright © 2007 AGCO Corporation

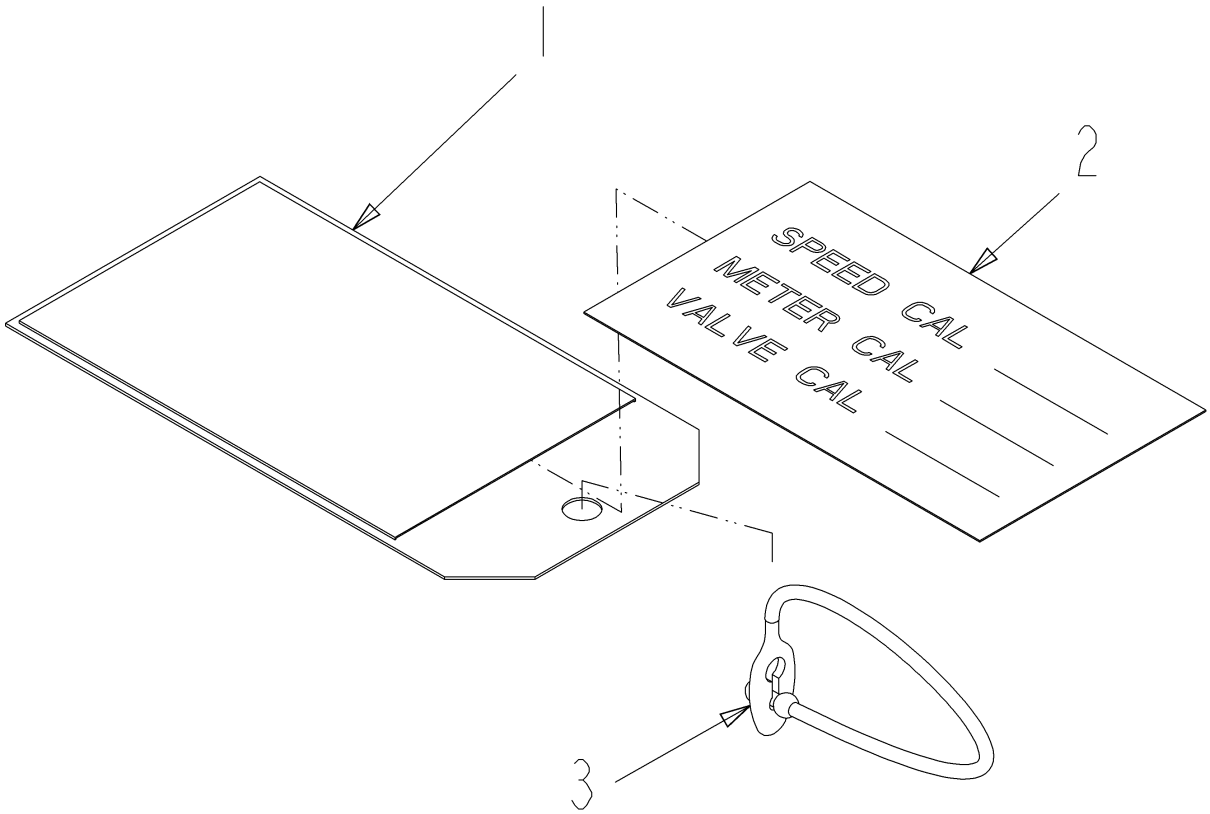

6618366-01-M889-.TIF

Copyright © 2007 AGCO Corporation

TAG ASSY, CALIBRATION

ITEM	PART #	QTY	DESCRIPTION	COMMENTS
REF	6618369	1	TIE-REMOVABLE	
REF	6618369	1	TIE-REMOVABLE	
REF	6618369	1	TIE-REMOVABLE	

Copyright © 2007 AGCO Corporation

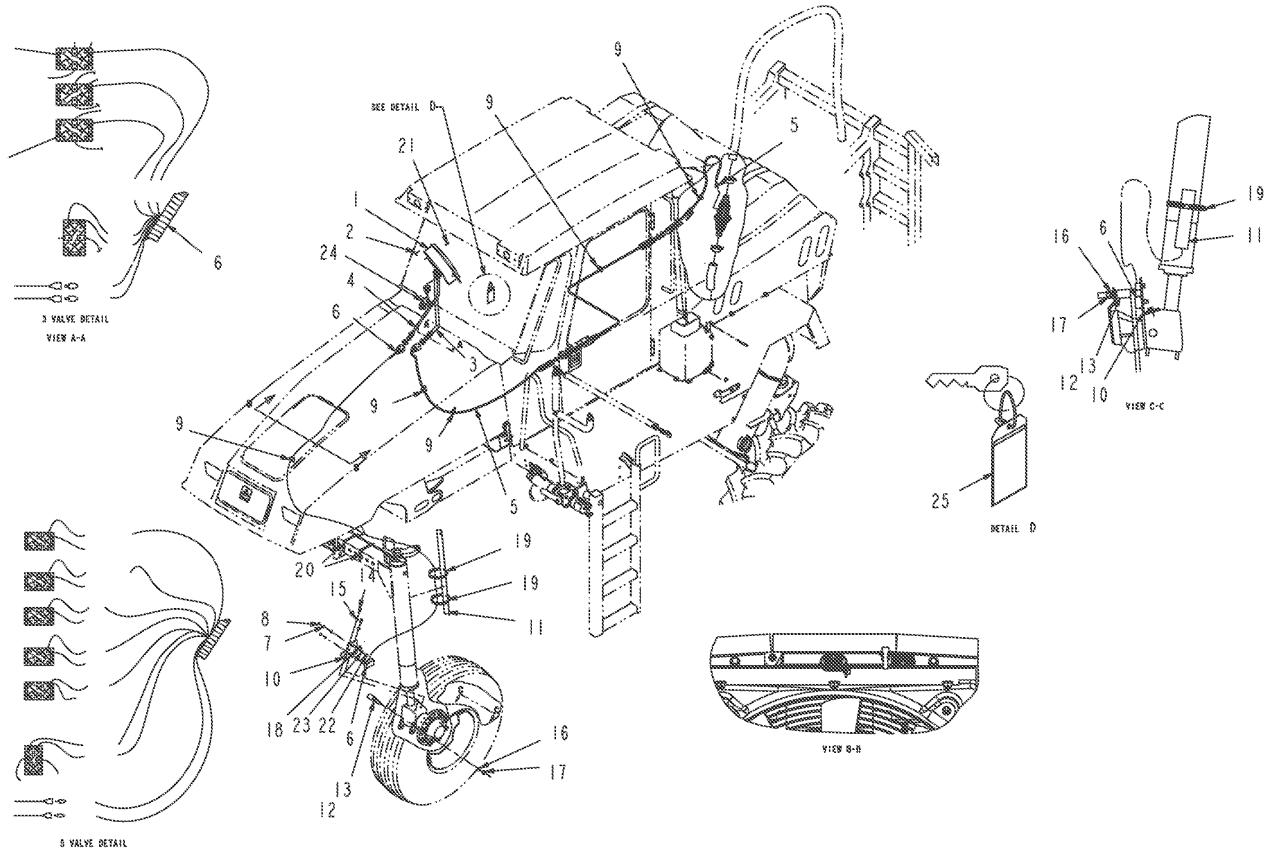

505465D1-05-N928-.TIF

Copyright © 2007 AGCO Corporation

CONTROLLER INSTL-RAVEN 460,WF

ITEM	PART #	QTY	DESCRIPTION	COMMENTS
1	WR56031	1	CONTROLLER RAVEN	
2	6662701	2	STRAP RETAINER	
3	6662294	1	CABLE ASSY	
4	6662295	1	CABLE-SPEED,24 IN	
5	6666305	1	CABLE-FLOW,15´	
6	6662297	1	SENSOR-SPEED	
7	AG550493	2	WASHER 0.25 LK ZN REG	
8	AG550612	2	NUT 0.25-20NC HEX ZN REG	
9	AG553557	6	TIE CABLE 7.37 .06-1.37 BLACK	
10	6627046	1	BRACKET	
11	6626923	1	SHIELD-CABLE	
12	6662702	4	MAGNET ASSY-RED	
13	6662703	4	MAGNET ASSY-BLACK	
14	WR55036	2	SCREW-CAP HEX M8 X 25	
15	AG561679	2	WASHER LOCK M8 ZN	
16	AG550264	8	WASHER 0.50 LK ZN REG	
17	AG550124	8	NUT 0.50-13NC HEX ZN REG	
18	WR55409	1	INSULATED CLAMP	
19	WR55298	2	CLAMP-HOSE,4 1/2 SST	
20	AG562496	AR	TIE CABLE 15.0 .18-4.00 BLACK	
21	6662922	2	SCREW,PAN HEAD	
22	WR55000	1	BOLT HEX 1/4-20UNC X.625 G5 ZN	
23	AG550671	2	WASHER 0.25 FL ZN SAE TYPE-A	
24	WR121947	1	CABLE ADAPTER	
25	6618366	1	TAG ASSY, CALIBRATION	SEE PAGE 20-10

Copyright © 2007 AGCO Corporation

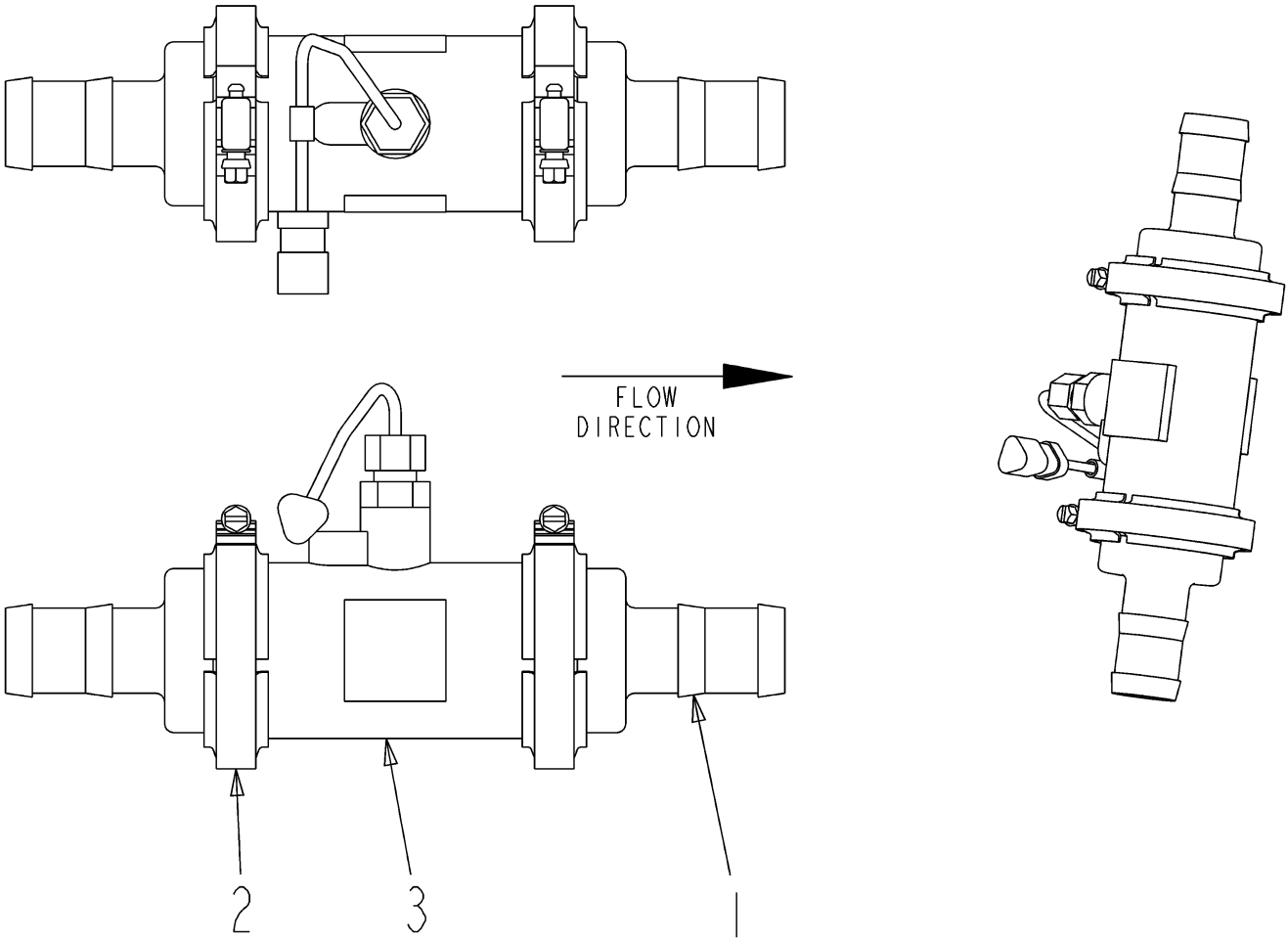

504212D1-01-M572-.TIF

Copyright © 2007 AGCO Corporation

FLWMTR KIT-2.00SP FLG, RFM60P

ITEM	PART #	QTY	DESCRIPTION	COMMENTS
1	AG056289	2	CONNECTOR 2.00FLGX1.25HOSE	
2	AG056785	2	CLAMP 2.00 FLANGE	
3	508209D1	1	FLWMTR-2.00SP FLG,RFM60P,CNXL	

Copyright © 2007 AGCO Corporation

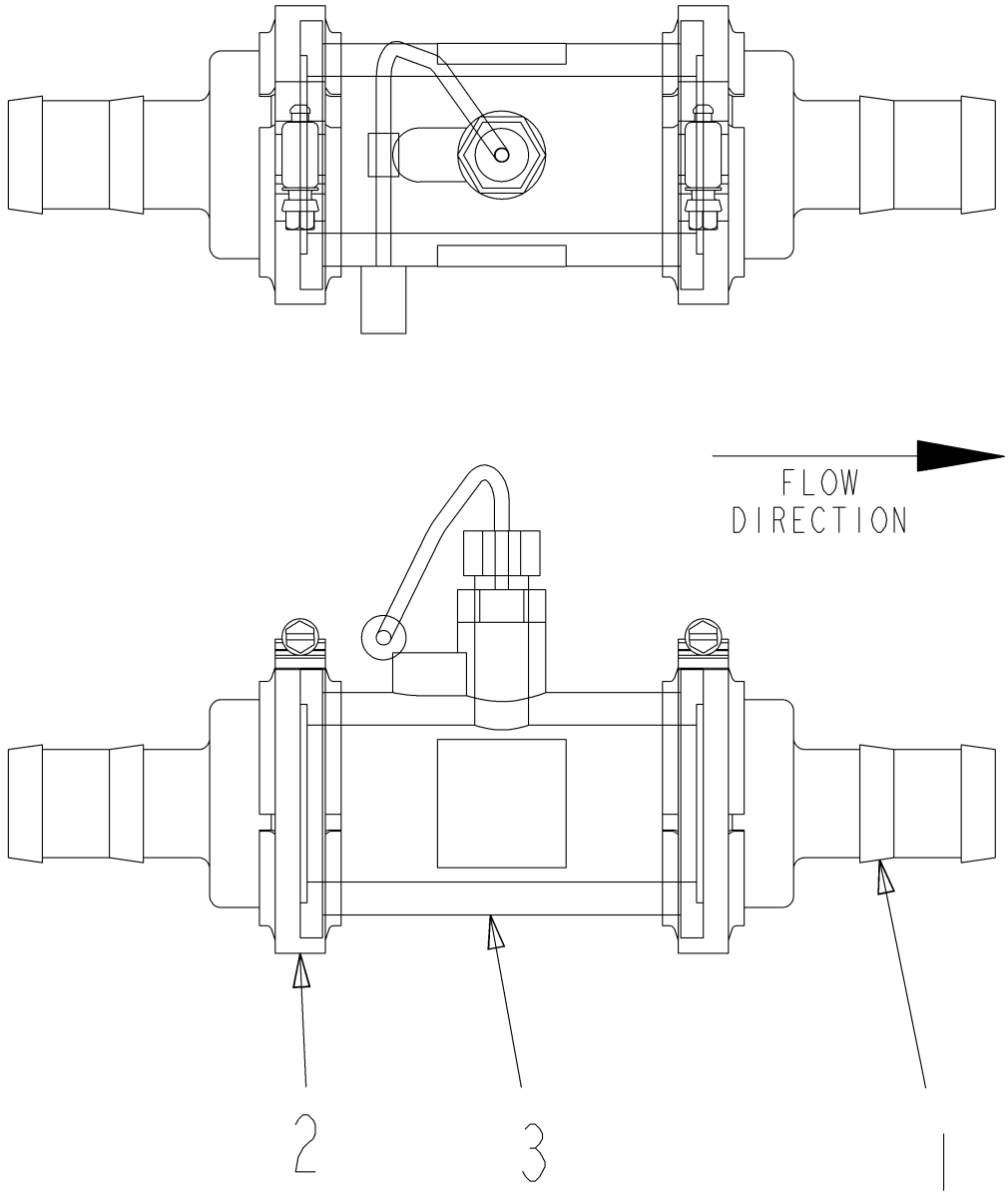

504212D1-02-N079-.TIF

Copyright © 2007 AGCO Corporation

FLWMTR KIT-2.00SP FLG, RFM60P

ITEM	PART #	QTY	DESCRIPTION	COMMENTS
1	AG056289	2	CONNECTOR 2.00FLGX1.25HOSE	
2	AG056785	2	CLAMP 2.00 FLANGE	
3	508209D1	1	FLWMTR-2.00SP FLG,RFM60P,CNXL	

Copyright © 2007 AGCO Corporation

MARKER INSTL - RSC 2130	21-1
MARKER INSTL - RSC 2130	21-2
MARKER INSTL - RSC 2130	21-3
COMPRESSOR-FOAM MARKER	21-4
FILTER ASSY, INCLINE	21-5
FILTER ASSY-CARBON	21-6
RSC FOAMHEAD/VALVE ASSY	21-7
DEFLECTOR-COLLECTOR, 2 IN	21-8
TANK ASSY,13 GAL RSC2130	21-9
CAP-ASSY, 2 1/4 IN	21-10

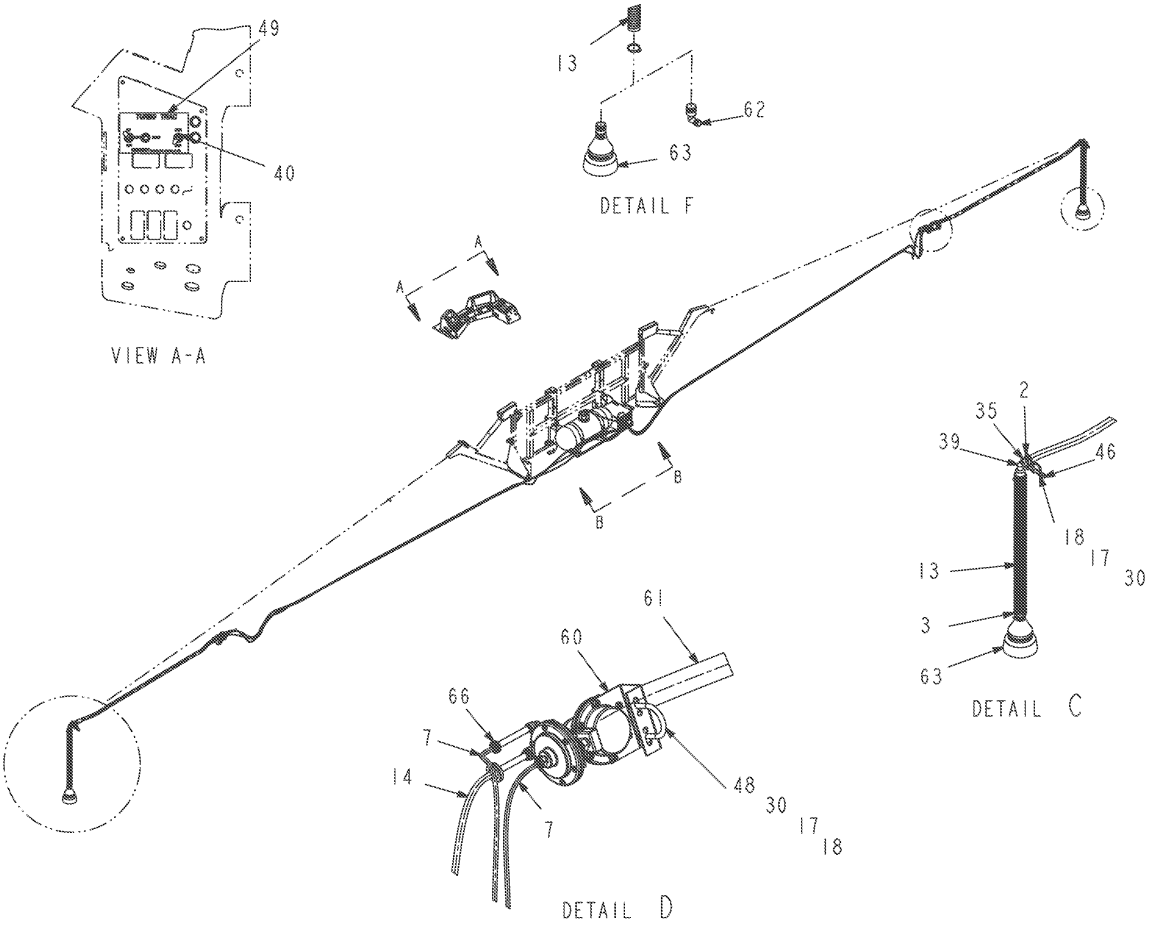

WR55875-05-N540-01.TIF

Copyright © 2007 AGCO Corporation

ITEM	PART #	QTY	DESCRIPTION	COMMENTS
2	WR10854	4	CLAMP-HOSE,1 1/4 SST,	
3	WR10856	4	CLAMP-HOSE,2 SST, ""ADAMS""	
7	WR133601	AR	TUBING, BLK .250	
13	WR135896	2	HOSE-DROP,3 ID X 36 LG	
14	AG514288	AR	TUBING-THERMOPLASTIC,J844-B,	
17	AG550205	12	WASHER 0.31 LK ZN REG	
18	AG550213	12	NUT 0.31-18NC HEX ZN REG	
22	AG550493	4	WASHER 0.25 LK ZN REG	
28	AG550671	6	WASHER 0.25 FL ZN SAE TYPE-A	
30	AG551015	12	WASHER 0.31 FL ZN REG TYPE-B	
34	AG562496	AR	TIE CABLE 15.0 .18-4.00 BLACK	
35	6612940	2	U-BOLT,BOOM END	
39	6632492	2	ELBOW-2 IN ,BOOM END	
40	6632502	3	SWITCH	
46	6660409	2	BRACKET-B00M END	
48	6664194	4	U-BOLT, 5116-18 X 2 1/16	
49	6664195	1	DECAL, SWITCH	
60	WR55888	2	RSC FOAMHEAD/VALVE ASSY	SEE PAGE 21-7
61	WR55902	20	FOAM HOSE- 1 1/4	
63	WR55904	2	DEFLECTOR-COLLECTOR, 2 IN	SEE PAGE 21-8
66	WR55920	2	VALVE-CHECK, 1/4 DISK	

Copyright © 2007 AGCO Corporation

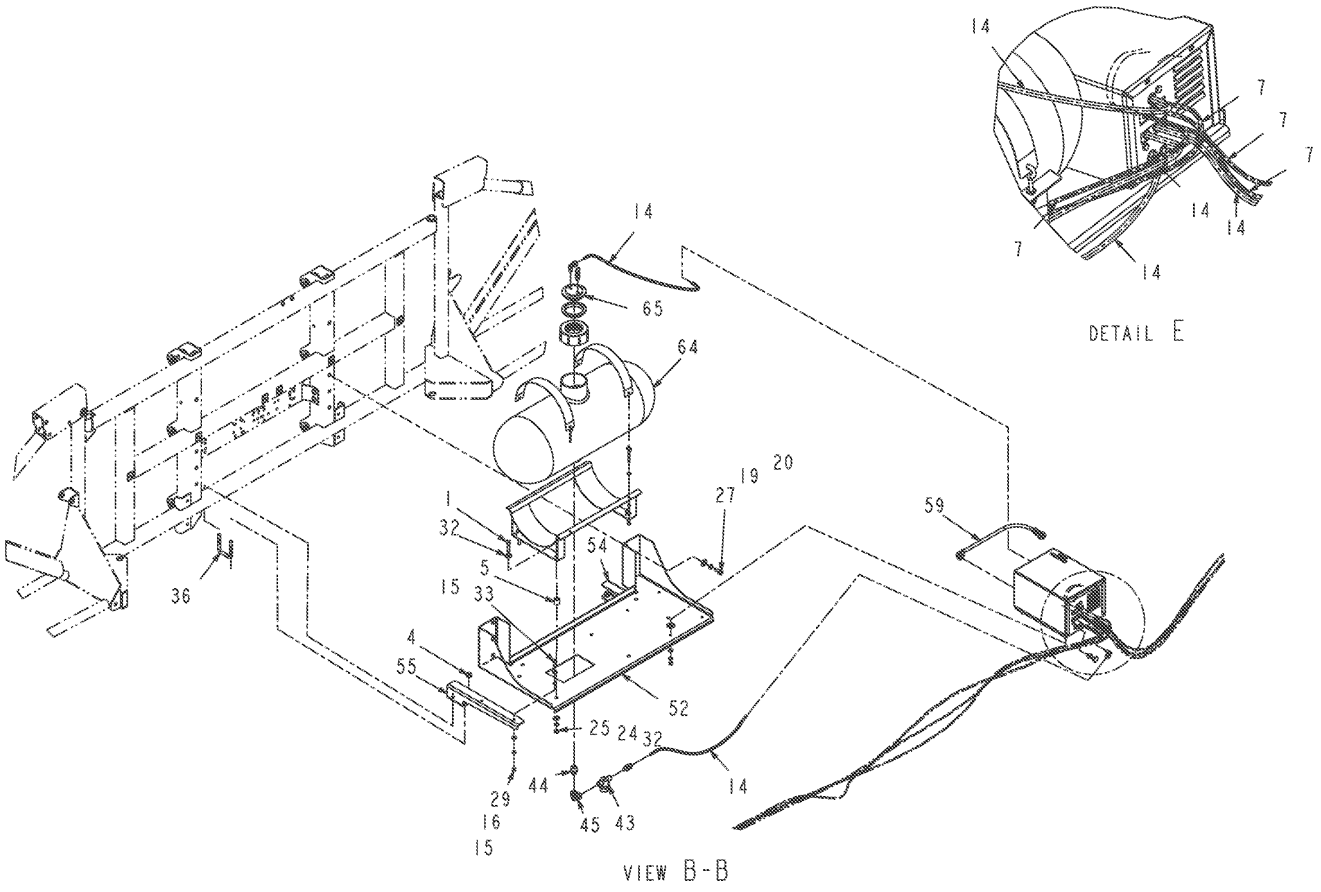

WR55875-05-N540-02.TIF

Copyright © 2007 AGCO Corporation

ITEM	PART #	QTY	DESCRIPTION	COMMENTS
1	WR10152	4	SCREW-CAP HEX 7/16 NC X 2	
4	WR55372	4	NUT-LOCK FLANGE, 1/2-13NC	
7	WR133601	AR	TUBING, BLK .250	
14	AG514288	AR	TUBING-THERMOPLASTIC,J844-B,	
15	AG514559	16	WASHER 0.37 FL ZN SAE TYP-A G8	
16	AG550191	8	WASHER 0.37 LK ZN REG	
19	AG550264	6	WASHER 0.50 LK ZN REG	
20	AG550353	6	WASHER 0.50 FL ZN REG TYPE-B	
24	AG550558	4	WASHER 0.43 LK ZN REG	
25	AG550566	4	NUT 0.43-14NC HEX ZN REG	
27	AG550655	6	BOLT 0.50-13NCX 1.00 G5 ZN HHD	
29	AG550825	8	NUT 0.37-16NC HEX ZN REG	
32	AG551406	8	WASHER 0.43 FL ZN REG TYPE-B	
33	AG555819	4	BOLT 0.37-16NCX 1.00 G5 PL HHD	
36	6620133	2	U-BOLT SQUARE,1/2 NC	
43	6660391	1	FILTER ASSY, INCLINE	SEE PAGE 21-5
44	6660393	1	ADAPTER-08MP/-12MP PP	
45	6660394	1	ELBOW-90,-08FP/-08FP PP	
52	WR38864	1	PLATFORM WLDMT-FOAM MARKER	
54	WR38878	1	BRACE-FOAM MARKER,RH	
55	WR38879	1	BRACE-FOAM MARKER,LH	
59	WR55884	1	CABLE POWER,W/FEMALE PLUG	
64	WR55908	1	TANK ASSY,13 GAL RSC2130	SEE PAGE 21-9
65	WR55910	1	CAP-ASSY, 2 1/4 IN	SEE PAGE 21-10

Copyright © 2007 AGCO Corporation

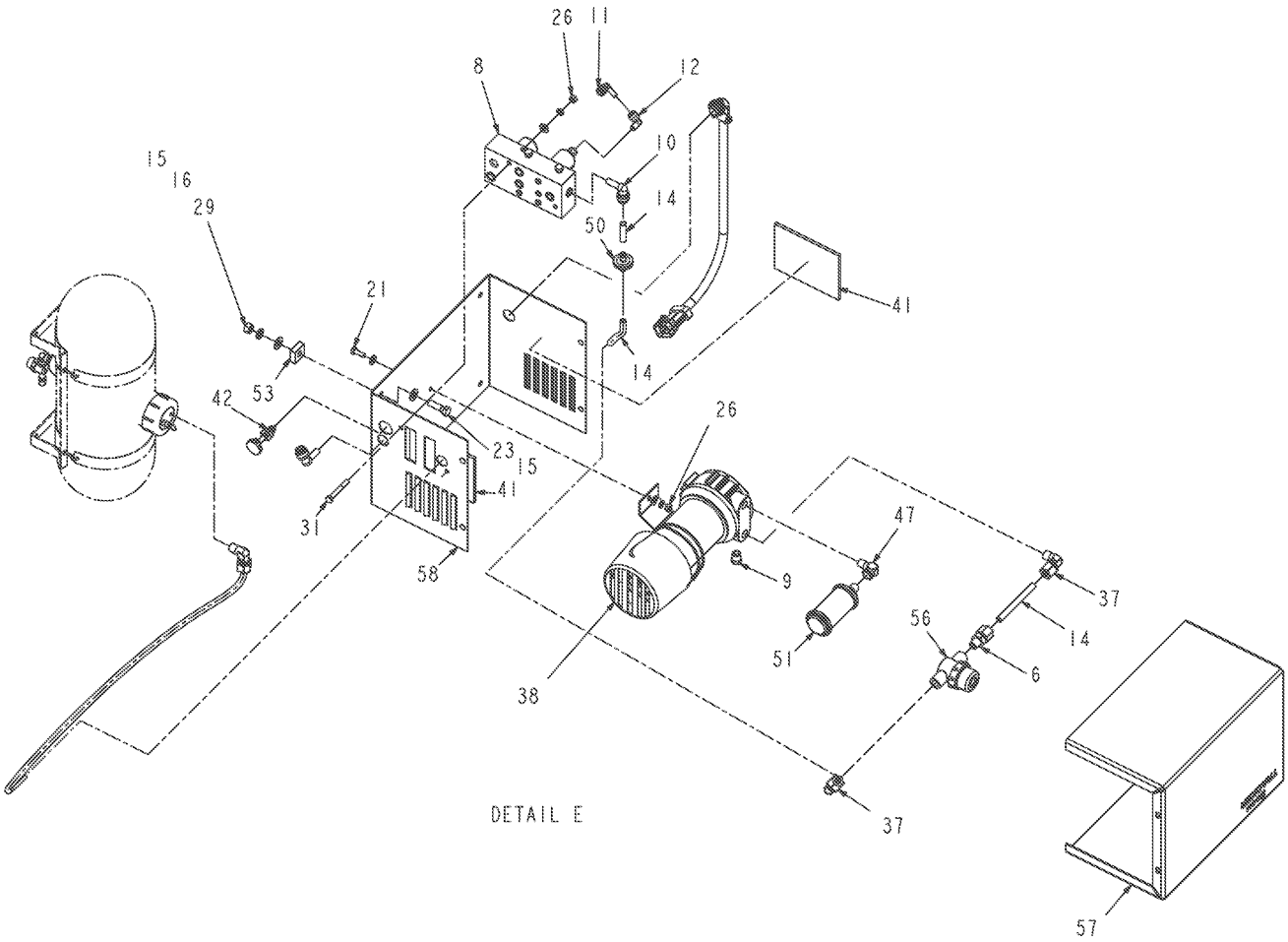

WR55875-05-N540-03.TIF

Copyright © 2007 AGCO Corporation

ITEM	PART #	QTY	DESCRIPTION	COMMENTS
6	WR132419	2	ADAPTER-04MP/-06 TUBE	
8	WR135792	1	CONTROL MODULE-POWER UNIT	
9	WR135793	1	PLUG-.25 MNPT,NYLON	
10	WR135794	2	FITTING-PUSH LOK,STEM ELBOW,-6	
11	WR135807	1	FITTING-PUSH LOK,STEM ELBOW,-4	
12	WR135808	1	FITTING-PUSH LOK,90L,-2MP-4TUB	
14	AG514288	AR	TUBING-THERMOPLASTIC,J844-B,	
15	AG514559	16	WASHER 0.37 FL ZN SAE TYP-A G8	
16	AG550191	8	WASHER 0.37 LK ZN REG	
21	AG550485	2	BOLT 0.25-20NCX 0.75 G5 ZN HHD	
23	AG550515	4	BOLT 0.37-16NCX 1.25 G5 ZN HHD	
26	AG550612	4	NUT 0.25-20NC HEX ZN REG	
29	AG550825	8	NUT 0.37-16NC HEX ZN REG	
31	AG551279	2	BOLT 0.25-20NCX 2.00 G5 ZN HHD	
37	6631678	3	ELBOW,W/NUT	
38	6631680	1	COMPRESSOR-FOAM MARKER	SEE PAGE 21-4
41	6659288	2	SCREEN	
42	6660378	1	VALVE-FLOW CONTROL,BRASS	
47	6660492	1	ELBOW	
50	6666294	3	VALVE-CHECK,3/8 DISK	
51	2504534B	1	FILTER	
53	WR38865	4	RECT-1.00X1.00X.375,W/A HOL	
56	WR55879	1	FILTER ASSY-CARBON	SEE PAGE 21-6
57	WR55882	1	COVER-POWER UNIT	
58	WR55883	1	POWER UNIT,BOX ONLY-RSC	

Copyright © 2007 AGCO Corporation

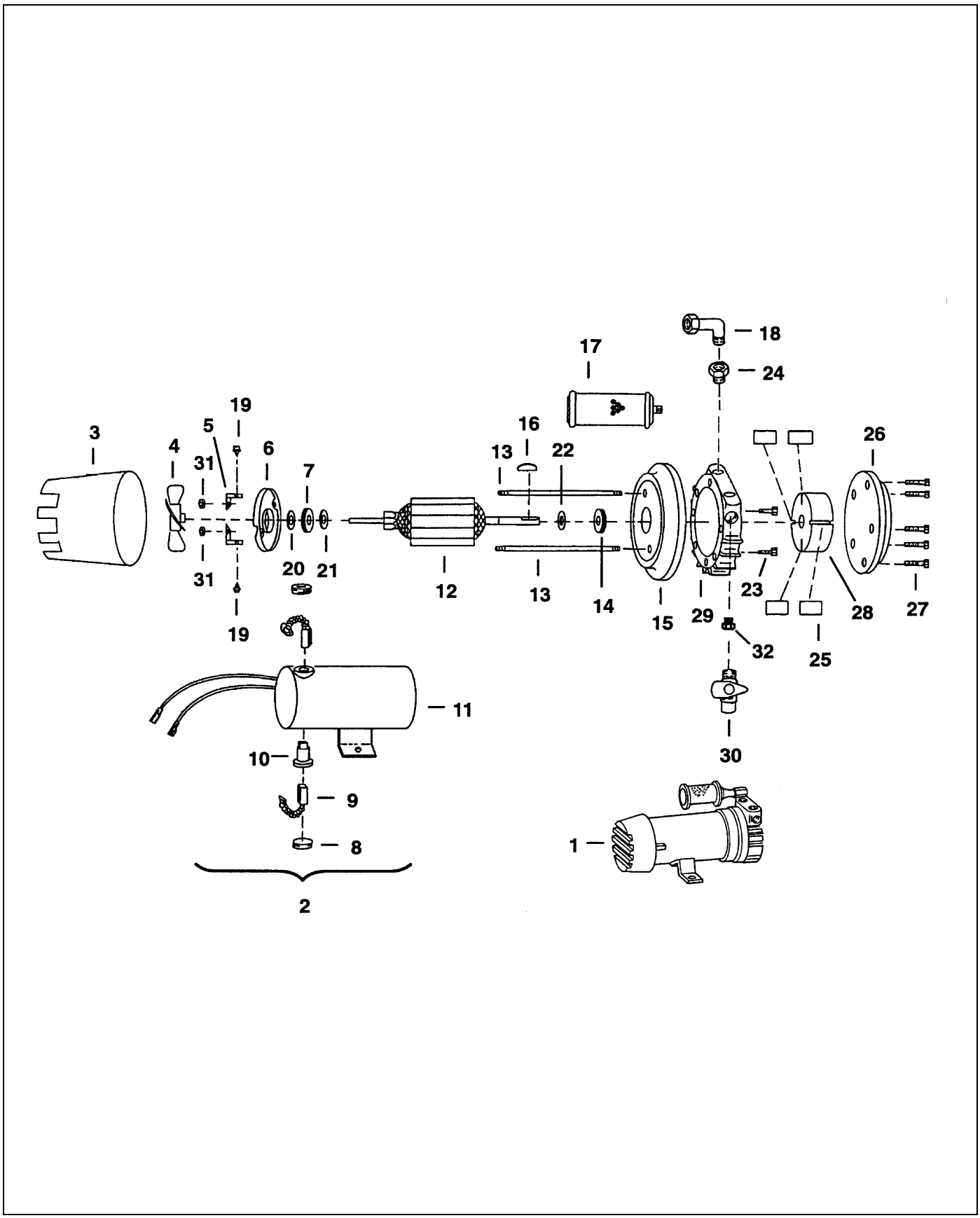

6631680.TIF

Copyright © 2007 AGCO Corporation

ITEM	PART #	QTY	DESCRIPTION	COMMENTS
2	6655603	1	MOTOR	
3	6632486	1	SHROUD	
4	6631675	1	FAN	
5	6655596	2	CLIP	
6	6655599	1	CAP	
7	6633635	1	BEARING	
8	6632500	2	CAP	
9	6631684	1	BRUSH	
10	6655598	1	HOLDER	
11	6655594	1	MOTOR	
12	6655597	1	ARMATURE	
13	6655600	2	BOLTS	
14	6633636	1	BEARING	
15	6655593	1	END BELL	
16	6632478	1	KEY	
17	2504534B	1	FILTER	
18	6660492	1	ELBOW	
19	6659547	2	SCREW	
20	6659548	1	WASHER	
21	6659549	1	RING	
22	6659550	1	RING	
23	6659551	2	SCREW	
24	6660579	1	ADAPTER	
25	6631683	1	VANES-COMPRESSOR-SET OF 4	
26	6655601	1	CAP	
27	6655595	1	BOLTS	
28	6632477	1	ROTOR	
29	6655602	1	HOUSING	
30	6632476	1	VALVE	
31	6659546	2	NUT	
32	6666300	1	PLUG	

Copyright © 2007 AGCO Corporation

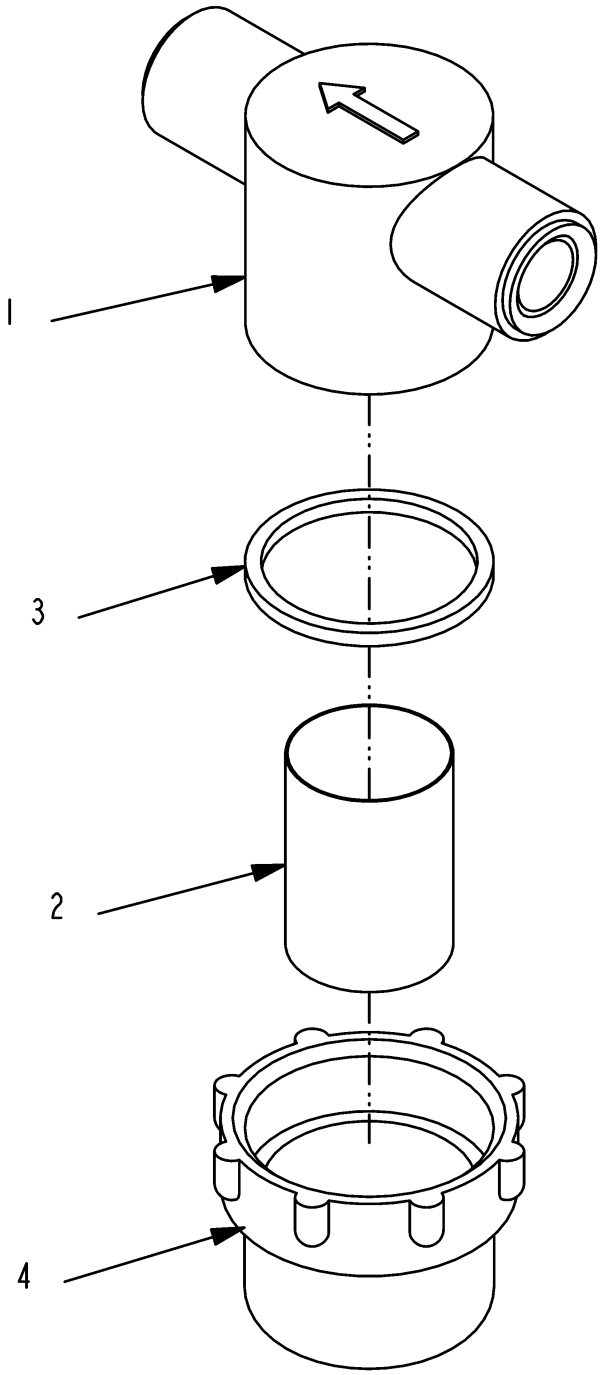

6660391-A.TIF

Copyright © 2007 AGCO Corporation

FILTER ASSY, INCLINE

ITEM	PART #	QTY	DESCRIPTION	COMMENTS
1	6660573	1	BODY-FITER,CARBON	
2	6660574	1	SCREEN-FILTER,INLINE	
3	6660575	1	0-RING-FILTER,CARBON	
4	6660576	1	BOWL-FILTER,CARB0N	

Copyright © 2007 AGCO Corporation

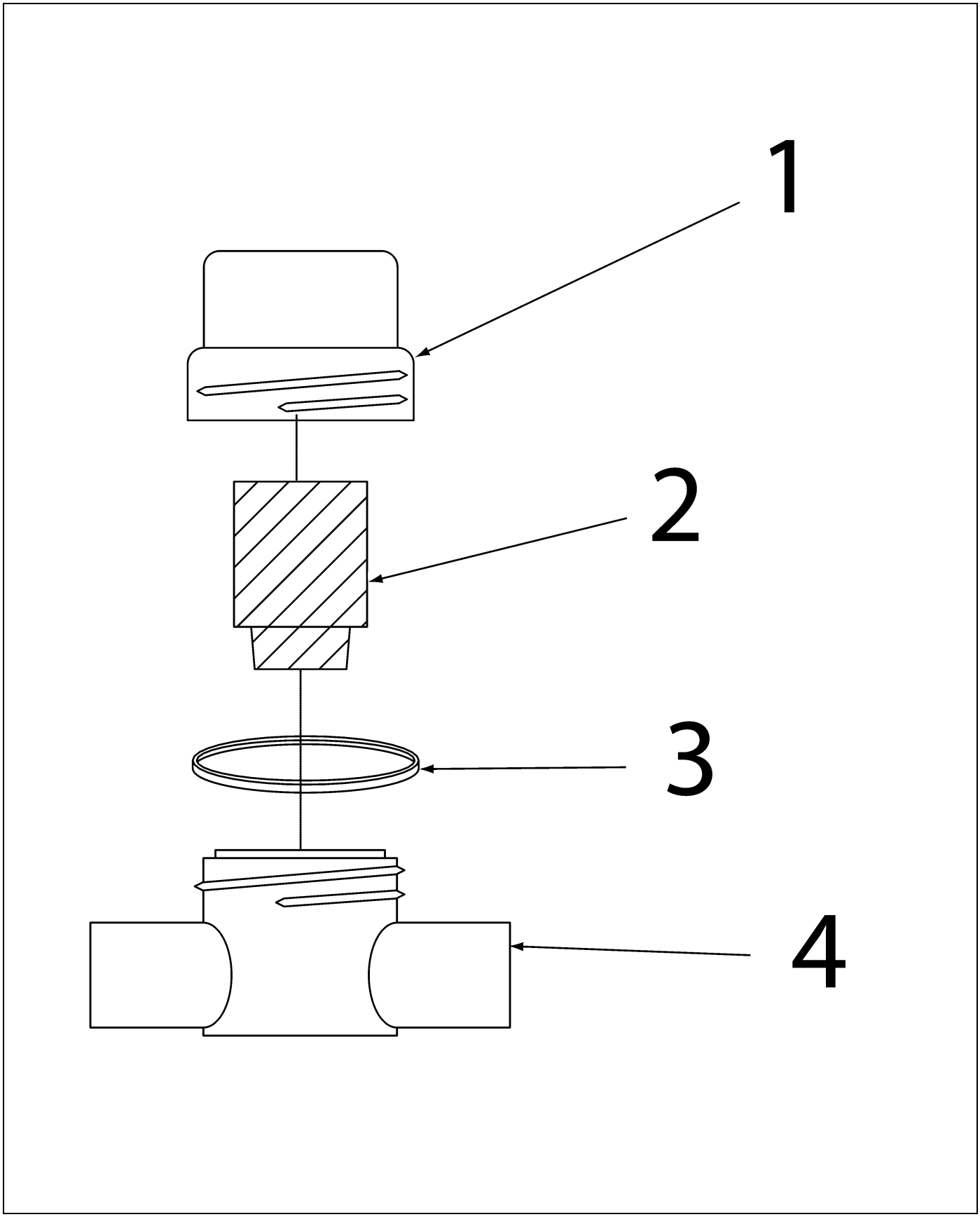

WR55879.TIF

Copyright © 2007 AGCO Corporation

FILTER ASSY-CARBON

ITEM	PART #	QTY	DESCRIPTION	COMMENTS
1	WR55929	1	BOWL-FILTER,CARBON	
2	6671142	1	ELEMENT-FILTER,CARBON	
3	WR55931	1	0-RING-FILTER,CARBON	
4	WR55930	1	BODY-FILTER,CARBON	

Copyright © 2007 AGCO Corporation

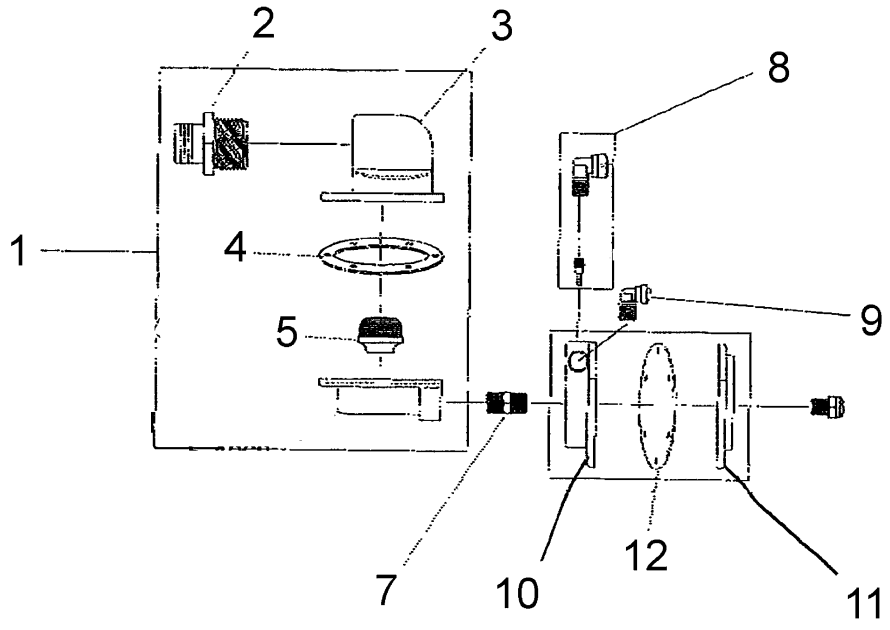

WR55888.TIF

Copyright © 2007 AGCO Corporation

RSC FOAMHEAD/VALVE ASSY

ITEM	PART #	QTY	DESCRIPTION	COMMENTS
REF	WR55901	11	SCREW-MACH,10-24 X 7/8	
REF	WR55901	11	SCREW-MACH,10-24 X 7/8	
REF	WR55901	11	SCREW-MACH,10-24 X 7/8	
1	WR55889	1	RSC FOAM HEAD ONLY	
2	WR55890	1	HOMOGENIZER 1 1/4	
3	WR55891	1	HOUSING-FOAMHEAD, TOP	
4	WR55892	1	GASKET-FOAMHEAD	
5	WR55893	1	SCREEN-3/8F	
6	WR55894	1	BRACKET-MOUNTING	
7	WR55895	1	NIPPLE-06, BRASS	
8	WR55896	1	ELBOW-90-04MP/-06 TUBE W/	
9	WR55897	1	ELBOW-90-04MP/-04 TUBE	
10	WR55898	1	VALVE-SHUT OFF, BASE	
11	WR55899	1	VALVE-SHUT OFF,CAP	
12	WR55900	1	VALVE-SHUT OFF, DIAPHRAGM	

Copyright © 2007 AGCO Corporation

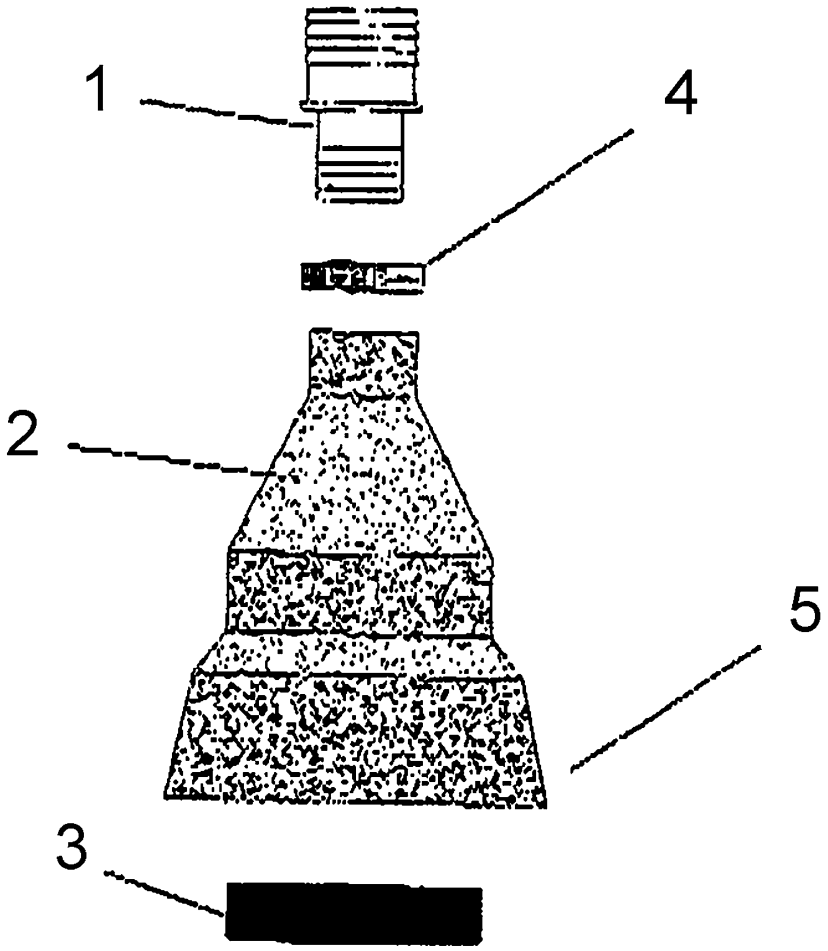

WR55904.TIF

Copyright © 2007 AGCO Corporation

DEFLECTOR-COLLECTOR, 2 IN

ITEM	PART #	QTY	DESCRIPTION	COMMENTS
1	WR55905	1	INSERT-COLLECTOR	
2	WR55906	1	DEFLECTOR-COLLECTOR,	
3	WR55907	1	CARTRIDGE-COLLECTOR	
4	WR55284	1	CLAMP-HOSE,1 3/4 SST	
5	WR55299	1	CLAMP-HOSE,5 SST	

Copyright © 2007 AGCO Corporation

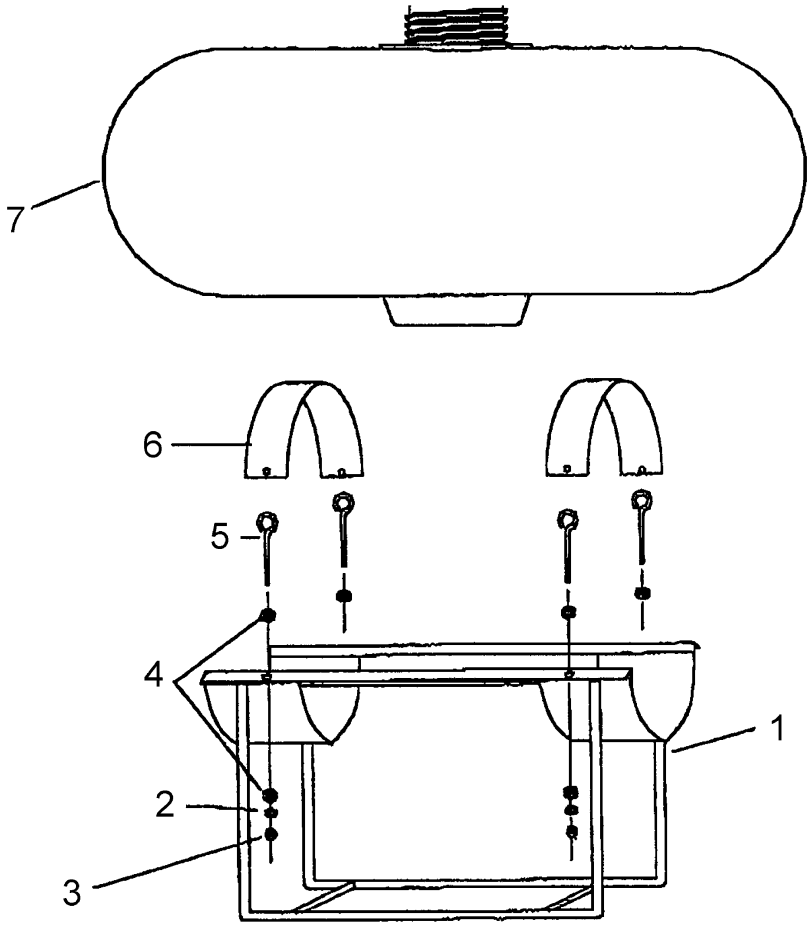

WR55908.TIF

Copyright © 2007 AGCO Corporation

TANK ASSY,13 GAL RSC2130

ITEM	PART #	QTY	DESCRIPTION	COMMENTS
1	WR55909	1	STAND-TANK	
2	AG550493	4	WASHER 0.25 LK ZN REG	
3	AG550612	4	NUT 0.25-20NC HEX ZN REG	
4	AG550671	8	WASHER 0.25 FL ZN SAE TYPE-A	
5	6660396	4	BOLT-EYE, 1/4-20 X 2 1/2 IN	
6	6660397	2	STRAP-TANK	
7	6669171	1	TANK,13 GAL	

Copyright © 2007 AGCO Corporation

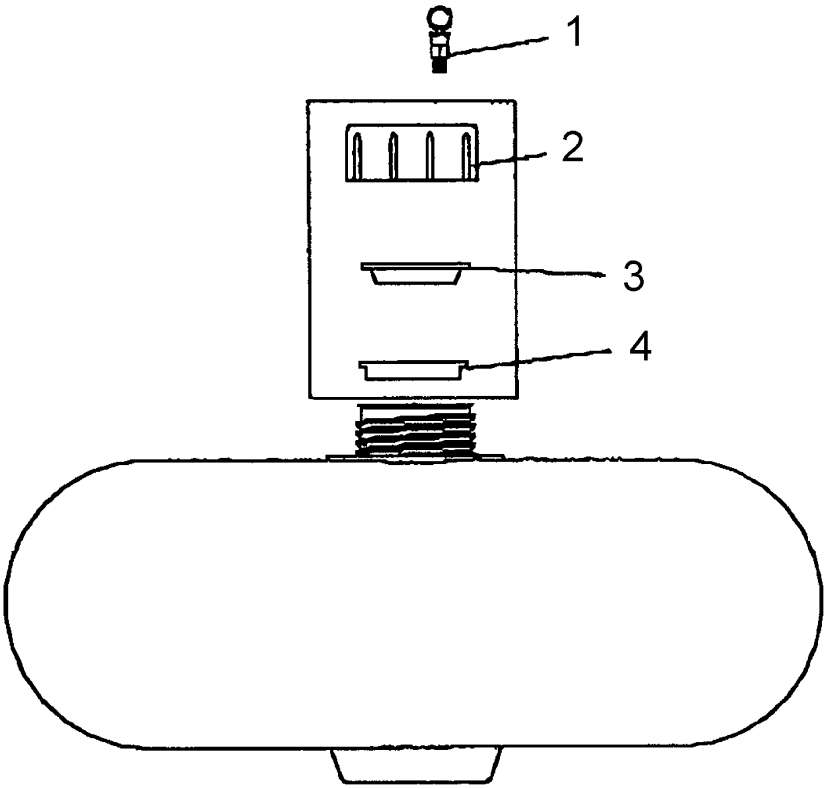

WR55910.TIF

Copyright © 2007 AGCO Corporation

CAP-ASSY, 2 1/4 IN

ITEM	PART #	QTY	DESCRIPTION	COMMENTS
1	WR55914	1	VALVE-PRESSURE RELIEF,	
2	WR55912	1	RING-TANK CAP	
3	WR55911	1	DISK-TANK CAP, 2 1/4 IN	
4	WR55913	1	GASKET-TANK CAP	

Copyright © 2007 AGCO Corporation

F/A-CROP DEFLECTOR,3400/4400	22-1
F/A-CROP DEFLECTOR,3400/4400	22-2
F/A-CROP DEFLECTOR,3600/4600	22-3
F/A-CROP DEFLECTOR,3600/4600	22-4
BELLY PAN INSTL-WF,AT	22-5
BELLY PAN INSTL-WF,AT	22-6
BELLY PAN INSTL-WF,AT	22-7
BELLY PAN INSTL-WF,AT	22-8
SHIELD-CENTER ASM,ALLISON	22-9
FRESH WATER INSTL	22-10
F/A - 50 HR FILTER KIT	22-11
F/A - 500 HR FILTER KIT	22-12
OVERSPRAY INSTL	22-13

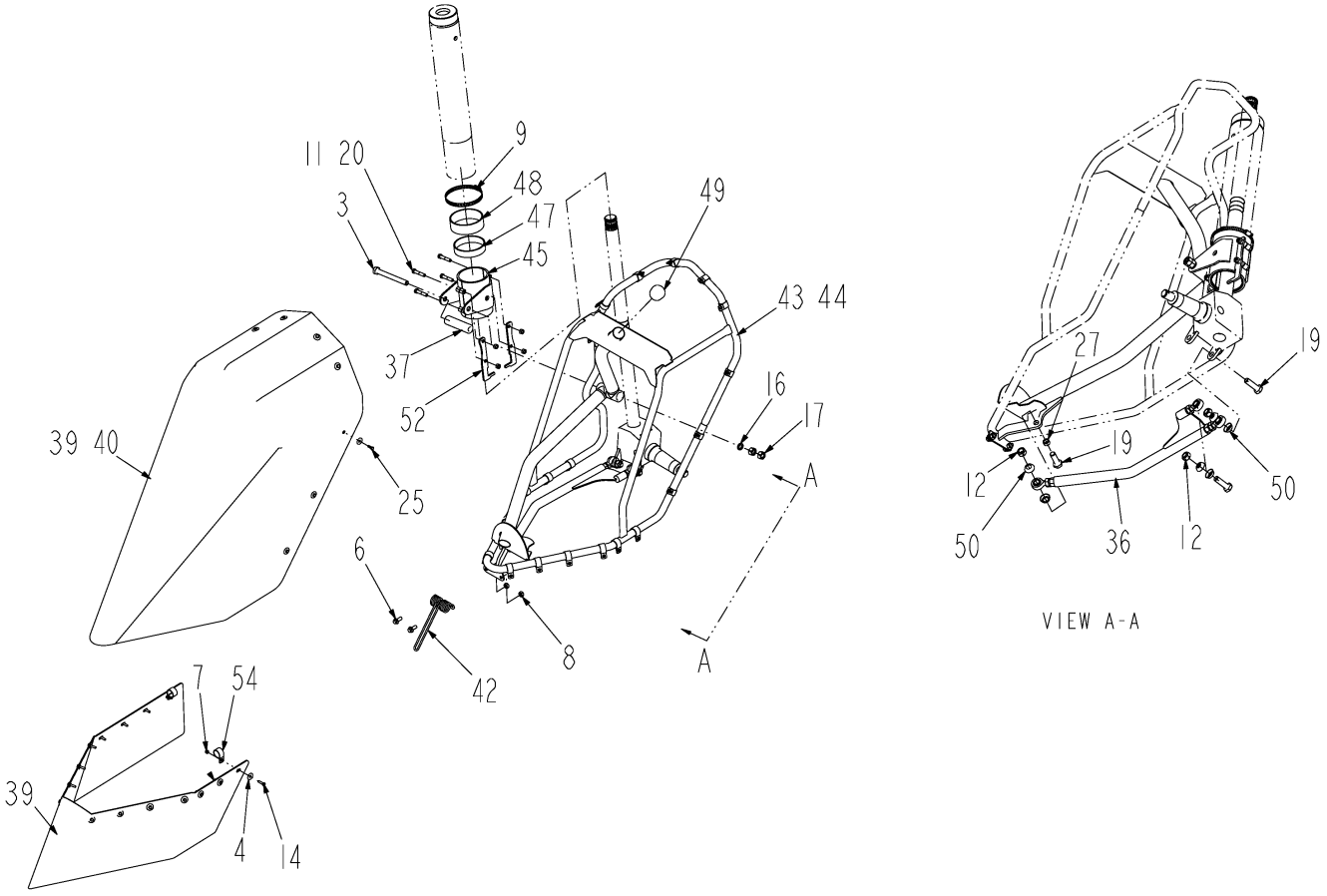

126863-04-N149-01.TIF

Copyright © 2007 AGCO Corporation

F/A-CROP DEFLECTOR,3400/4400

ITEM	PART #	QTY	DESCRIPTION	COMMENTS
1	AG002288	AR	BAG PLASTIC 6 X 10	
2	AG002358	AR	BAG PLASTIC 3X 6	
3	WR55021	2	SCREW-CAP HEX 5/8 NC X	
4	WR55157	94	WASHER-FLAT,8MM ID,	
6	WR55215	8	SCREW-HEX FLG,M10X1.5X25 CL8.8	
7	WR55271	94	NUT-LOCK,M6 X 1.0,PREV	
8	WR55272	8	NUT-LOCK,M10 X 1.5,PREV	
9	WR55299	2	CLAMP-HOSE,5 SST	
11	WR55353	-	NUT-TOPLOCK, 3/8-16UNC G8	
12	WR55355	6	NUT-TOPLOCK,5/8-11UNC G8	
14	AG520866	60	BOLT-M6-1.0X25,CL8.8,ZN,HHD	
16	AG550450	2	WASHER 0.62 LK ZN REG	
17	AG550477	4	NUT 0.62-11NC HEX ZN REG	
19	AG552062	6	BOLT 0.62-11NCX 2.00 G5 ZN HHD	
20	AG552240	-	BOLT 0.37-16NCX 2.00 G5 ZN HHD	
25	AG562327	34	BOLT M6-1.00X20MM G8.8 ZN HHD	
27	6503451	2	SPACER	
28	6504880	1	SACK-BURLAP	
36	6597223	2	STEERING ASSY-ARM	SEE PAGE 5-4
37	6617579	4	BUSHING-RUBBER	
39	6626875	4	APRON	
40	6626876	1	SHIELD-CROP,LH	
41	6626877	1	SHIELD-CROP,RH	
42	6626900	4	SPRING-APRON	
43	6626901	1	FRAME-W/A,LH	
44	6626902	1	FRAME-W/A,RH	
45	6627378	2	PIVOT-MACH	
46	6627436	1	BOX-PLYWOOD	
47	6627498	2	SPACER-SEAL	
48	6627499	2	SEAL-PIVOT	
49	6659910	2	CAP	
50	6670252	12	SEAL-BALL JOINT	
52	6804083	4	STOP-PLATE	
53	508676D1	1	INSTRUCTIONS-MOUNTING	
54	WR55665	90	CLAMP-COATED 1.0 ID X .62W	

Copyright © 2007 AGCO Corporation

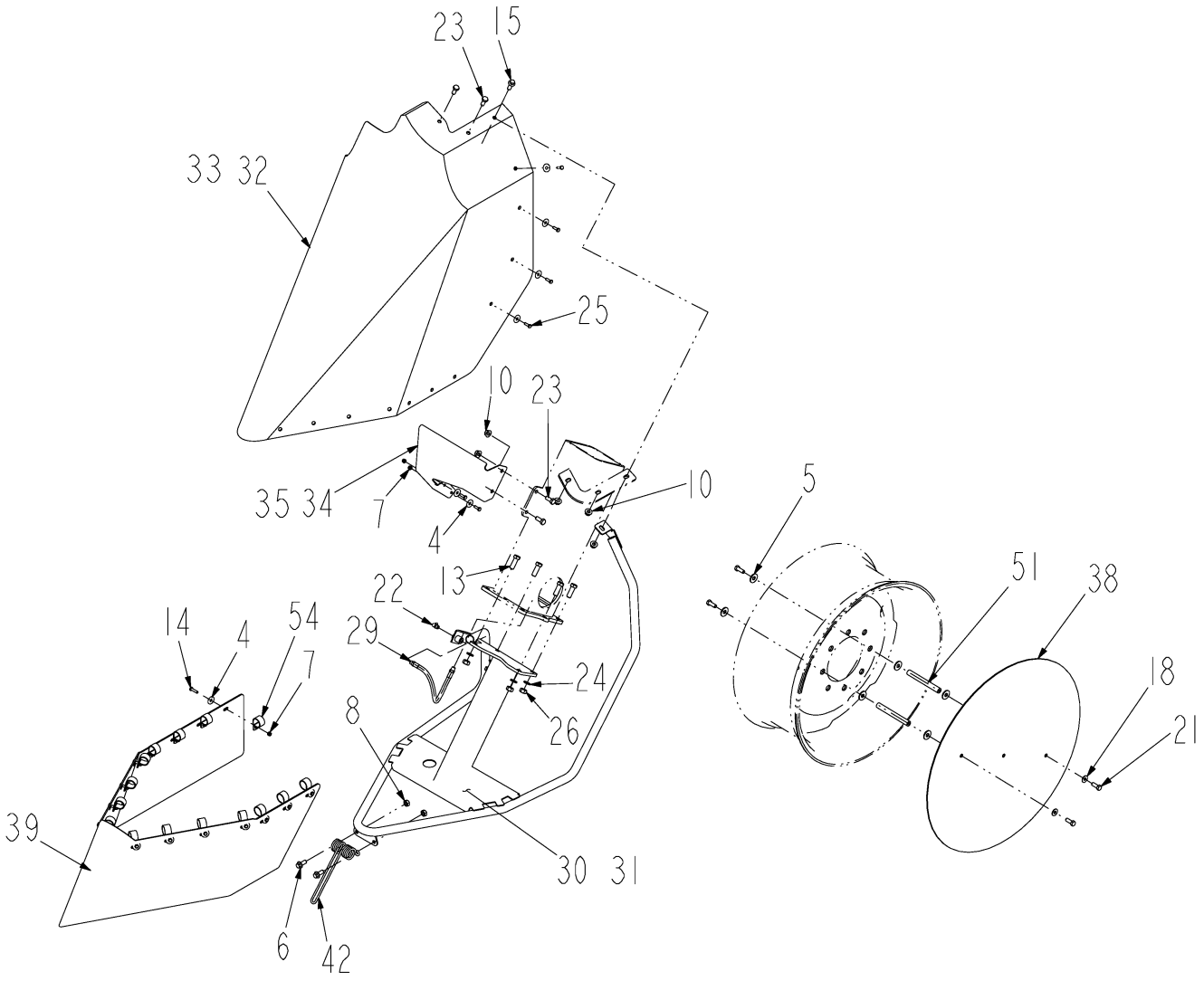

126863-04-N149-02.TIF

Copyright © 2007 AGCO Corporation

ITEM	PART #	QTY	DESCRIPTION	COMMENTS
4	WR55157	94	WASHER-FLAT,8MM ID,	
5	WR55158	12	WASHER-FLAT,10MM ID,	
6	WR55215	8	SCREW-HEX FLG,M10X1.5X25 CL8.8	
7	WR55271	94	NUT-LOCK,M6 X 1.0,PREV	
8	WR55272	8	NUT-LOCK,M10 X 1.5,PREV	
10	WR55301	10	NUT-FLANGE,M10 X 1.5,PREV	
13	AG518304	8	BOLT M12-1.75X 35MM G8.8 ZN HH	
14	AG520866	60	BOLT-M6-1.0X25,CL8.8,ZN,HHD	
15	AG523069	2	BOLT-M10-1.5X30,C8.8,ZN,FLG	
18	AG551015	4	WASHER 0.31 FL ZN REG TYPE-B	
21	AG555819	8	BOLT 0.37-16NCX 1.00 G5 PL HHD	
22	AG559083	4	FITTING LUB 90D 0.125 NPTF	
23	AG561683	8	BOLT M10-1.5 X 25MM G8.8 ZN HH	
24	AG562272	8	WASHER M12 LK ZN REG	
25	AG562327	34	BOLT M6-1.00X20MM G8.8 ZN HHD	
26	AG562797	8	NUT HEX M12 X 1.75	
29	6531180	2	HOSE-02MP-02MPX-03R1	
30	6596632	1	FRAME-W/A,LH	
31	6596633	1	FRAME-W/A,RH	
32	6596640	1	SHIELD-DEFLECTOR,REAR,LH	
33	6596641	1	SHIELD-DEF,REAR,RH	
34	6596643	1	SHIELD-BRAKE,LH	
35	6596645	1	SHIELD-BRAKE,RH	
38	6617676	2	SHIELD-WHEEL	
39	6626875	4	APRON	
42	6626900	4	SPRING-APRON	
51	6801026	4	SPACER	
54	WR55665	90	CLAMP-COATED 1.0 ID X .62W	

Copyright © 2007 AGCO Corporation

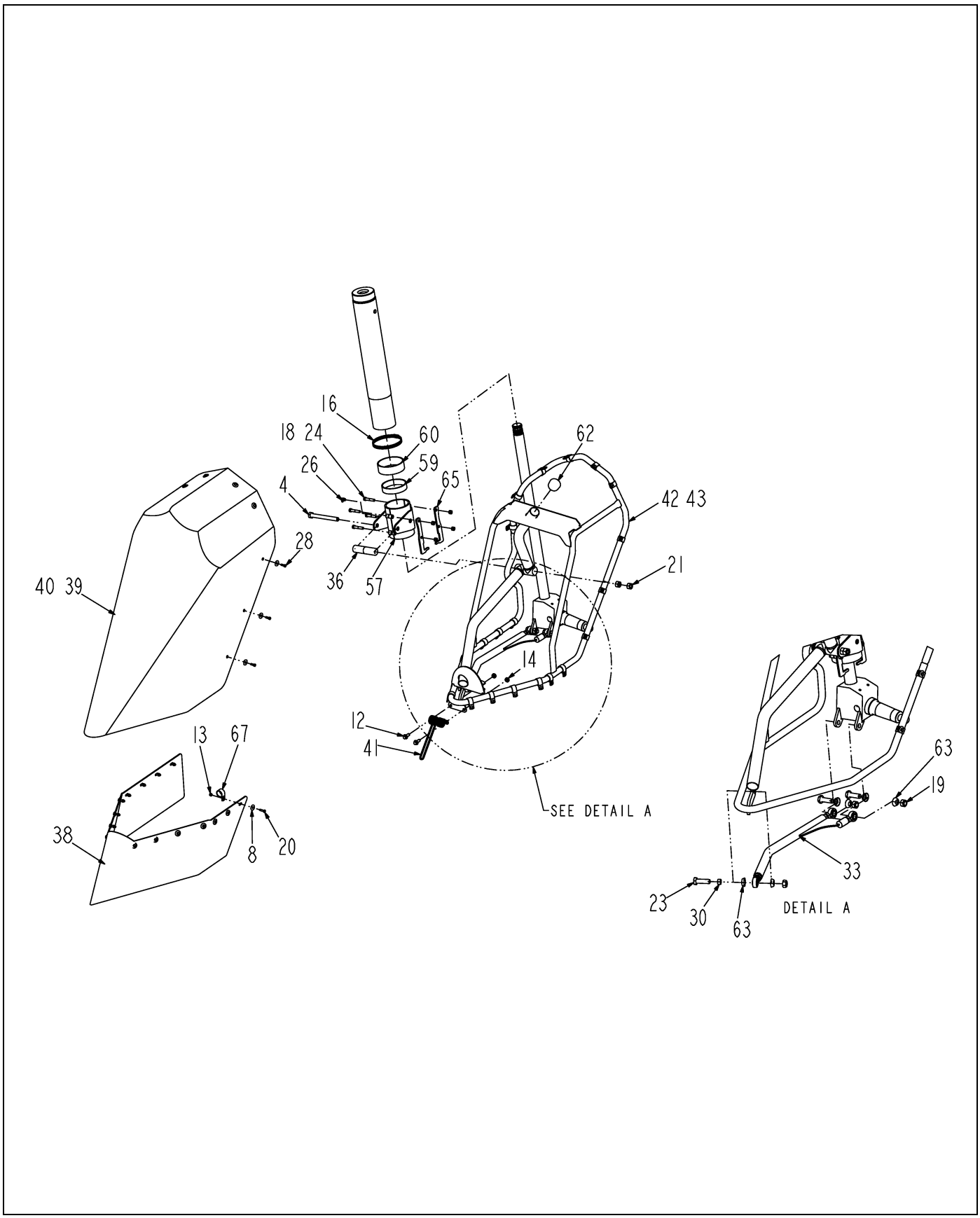

126864-04-N149-01.TIF

Copyright © 2007 AGCO Corporation

F/A-CROP DEFLECTOR,3600/4600

ITEM	PART #	QTY	DESCRIPTION	COMMENTS
1	AG002288	AR	BAG PLASTIC 6 X 10	
2	AG002358	AR	BAG PLASTIC 3X 6	
4	WR55021	2	SCREW-CAP HEX 5/8 NC X	
8	WR55157	50	WASHER-FLAT,8MM ID,	
12	WR55215	10	SCREW-HEX FLG,M10X1.5X25 CL8.8	
13	WR55271	50	NUT-LOCK,M6 X 1.0,PREV	
14	WR55272	4	NUT-LOCK,M10 X 1.5,PREV	
16	WR55299	2	CLAMP-HOSE,5 SST	
18	WR55353	4	NUT-TOPLOCK, 3/8-16UNC G8	
19	WR55355	6	NUT-TOPLOCK,5/8-11UNC G8	
20	AG520866	30	BOLT-M6-1.0X25,CL8.8,ZN,HHD	
21	AG550477	4	NUT 0.62-11NC HEX ZN REG	
23	AG552062	6	BOLT 0.62-11NCX 2.00 G5 ZN HHD	
24	AG552240	4	BOLT 0.37-16NCX 2.00 G5 ZN HHD	
26	AG559083	4	FITTING LUB 90D 0.125 NPTF	
28	AG562327	20	BOLT M6-1.00X20MM G8.8 ZN HHD	
30	6503451	2	SPACER	
31	6504880	1	SACK-BURLAP	
33	6597223	2	STEERING ASSY-ARM	SEE PAGE 5-4
36	6617579	4	BUSHING-RUBBER	
38	6626875	2	APRON	
39	6626876	1	SHIELD-CROP,LH	
40	6626877	1	SHIELD-CROP,RH	
41	6626900	2	SPRING-APRON	
42	6626901	1	FRAME-W/A,LH	
43	6626902	1	FRAME-W/A,RH	
57	6627378	2	PIVOT-MACH	
58	6627436	1	BOX-PLYWOOD	
59	6627498	2	SPACER-SEAL	
60	6627499	2	SEAL-PIVOT	
62	6659910	2	CAP	
63	6670252	12	SEAL-BALL JOINT	
65	6804083	4	STOP-PLATE	
66	508677D1	1	INSTRUCTIONS-MOUNTING	
67	WR55665	50	CLAMP-COATED 1.0 ID X .62W	

Copyright © 2007 AGCO Corporation

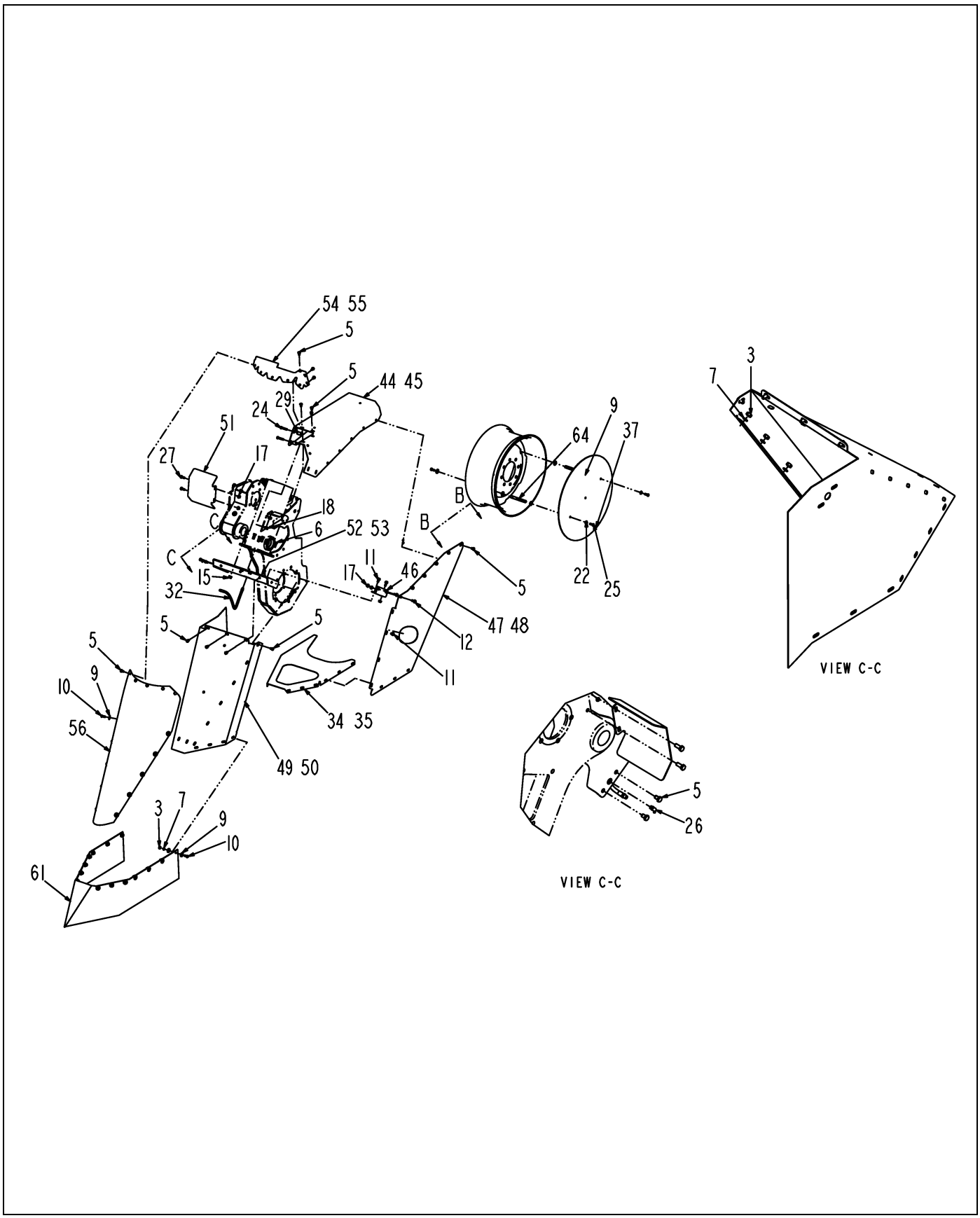

126864-04-N149-02.TIF

Copyright © 2007 AGCO Corporation

ITEM	PART #	QTY	DESCRIPTION	COMMENTS
3	WR50838	55	NUT-HEX,METRIC M10-1.5	
5	WR55045	44	SCREW-CAP HEX M10 X 16	
6	WR55055	12	SCREW-CAP HEX M12 X 30	
7	WR55106	56	WASHER-LOCK SPRING,10 MM	
9	WR55158	108	WASHER-FLAT,10MM ID,	
10	WR55193	48	SCREW-CAP SOCK M10 X 25,	
11	WR55214	10	SCREW-HEX FLG,M10X1.5X20 CL8.8	
12	WR55215	10	SCREW-HEX FLG,M10X1.5X25 CL8.8	
15	WR55273	12	NUT-LOCK,M12 X 1.5,PREV	
17	WR55301	10	NUT-FLANGE,M10 X 1.5,PREV	
18	WR55353	4	NUT-TOPLOCK, 3/8-16UNC G8	
22	AG551015	4	WASHER 0.31 FL ZN REG TYPE-B	
24	AG552240	4	BOLT 0.37-16NCX 2.00 G5 ZN HHD	
25	AG555819	8	BOLT 0.37-16NCX 1.00 G5 PL HHD	
26	AG559083	4	FITTING LUB 90D 0.125 NPTF	
27	AG561683	4	BOLT M10-1.5 X 25MM G8.8 ZN HH	
29	6503213	4	SPACER	
32	6531180	2	HOSE-02MP-02MPX-03R1	
34	6617533	1	BRACE-LH	
35	6617534	1	BRACE-RH	
37	6617676	2	SHIELD-WHEEL	
44	6627252	1	FENDER-W/A,LH	
45	6627253	1	FENDER-W/A,RH	
46	6627254	2	BRACKET	
47	6627255	1	PANEL-LH	
48	6627256	1	PANEL-RH	
49	6627257	1	WRAPAROUND-LH	
50	6627258	1	WRAPAROUND-RH	
51	6627262	2	SHIELD	
52	6627278	1	MOUNT-W/A,LH	
53	6627279	1	MOUNT-W/A,RH	
54	6627280	1	PANEL-W/A,LH	
55	6627281	1	PANEL-W/A,RH	
56	6627282	2	FRONT-DEFLECTOR,CROP	
61	6657731	2	APRON	
64	6801026	4	SPACER	

Copyright © 2007 AGCO Corporation

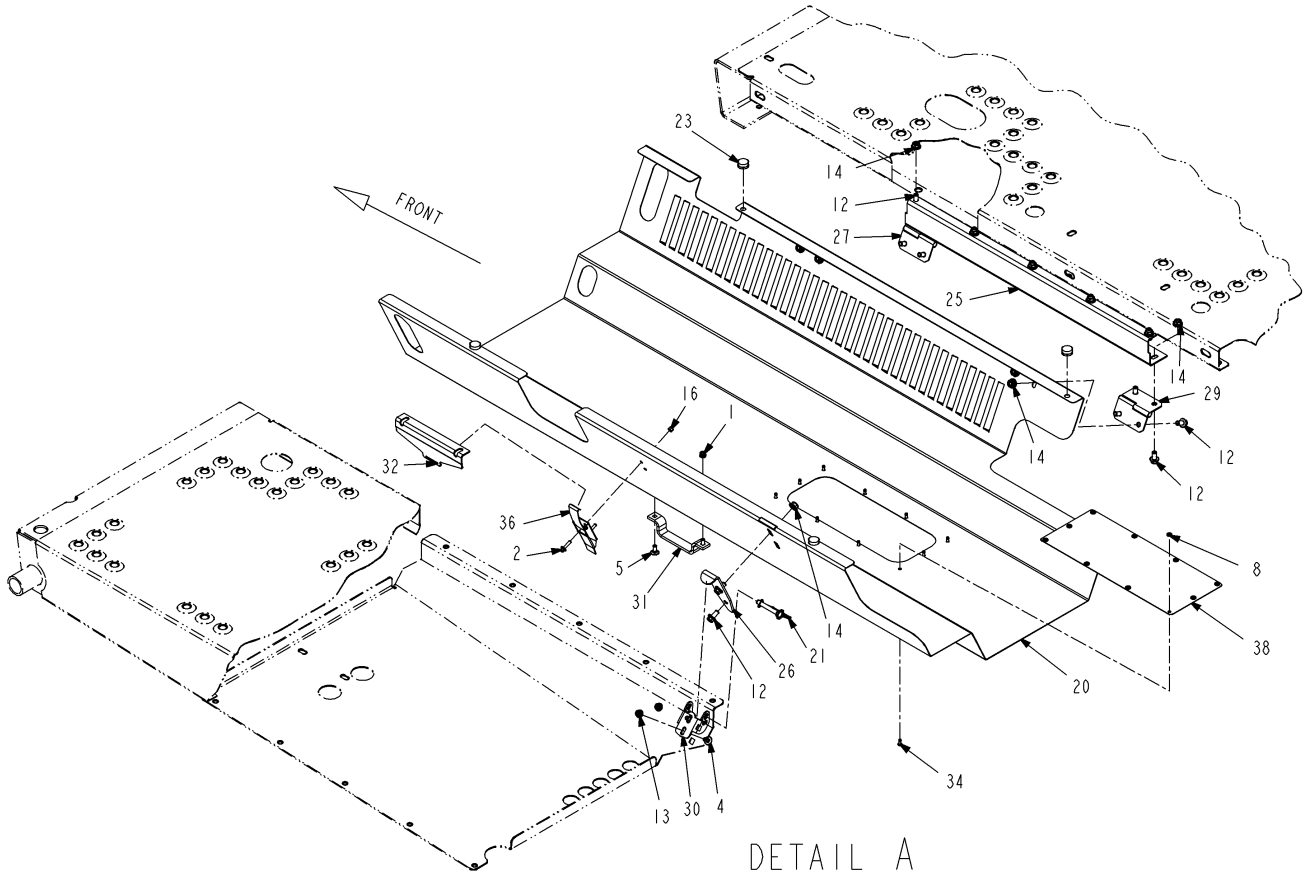

518560D1-01-R115-01.TIF

Copyright © 2007 AGCO Corporation

BELLY PAN INSTL-WF,AT

ITEM	PART #	QTY	DESCRIPTION	COMMENTS
1	WR32254	2	NUT-TOPLOCK,M8-1.25	
2	WR34508	2	SCREW-CAP HEX M6 X 1.0 X	
4	WR55171	2	BOLT-CARRIAGE,M8 X 16,	
5	WR55172	2	BOLT-CARRIAGE,M8 X 20,	
8	WR55178	10	WASHER-FLAT STD,#8	
12	WR55214	27	SCREW-HEX FLG,M10X1.5X20 CL8.8	
13	WR55280	12	NUT-FLANGE,M8 X 1.25	
14	WR55281	28	NUT-FLANGE,M10 X 1.5	
16	WR55310	2	NUT-LOCK HEX,M6 X 1.0,	
20	WR129524	1	SHIELD-CROP,ALLISON	
21	6510020	3	PIN-SNAPPER	
23	6519178	6	BUMPER	
25	6626826	1	CHANNEL	
26	6626860	3	ANGLE	
27	6626861	2	HINGE-RH	
29	6626869	2	HINGE, LH	
30	6626921	3	EAR-LATCH	
31	6627414	1	HANDLE	
32	6627458	1	BRACKET-LATCH	
34	6630207	10	RIVET-POP	
36	6664825	1	LATCH-DRAW,OVER CNTR	
38	6801069	1	SCREEN-FAN	
	FOOTNOTE		EFFECTIVE Txx1001	

Copyright © 2007 AGCO Corporation

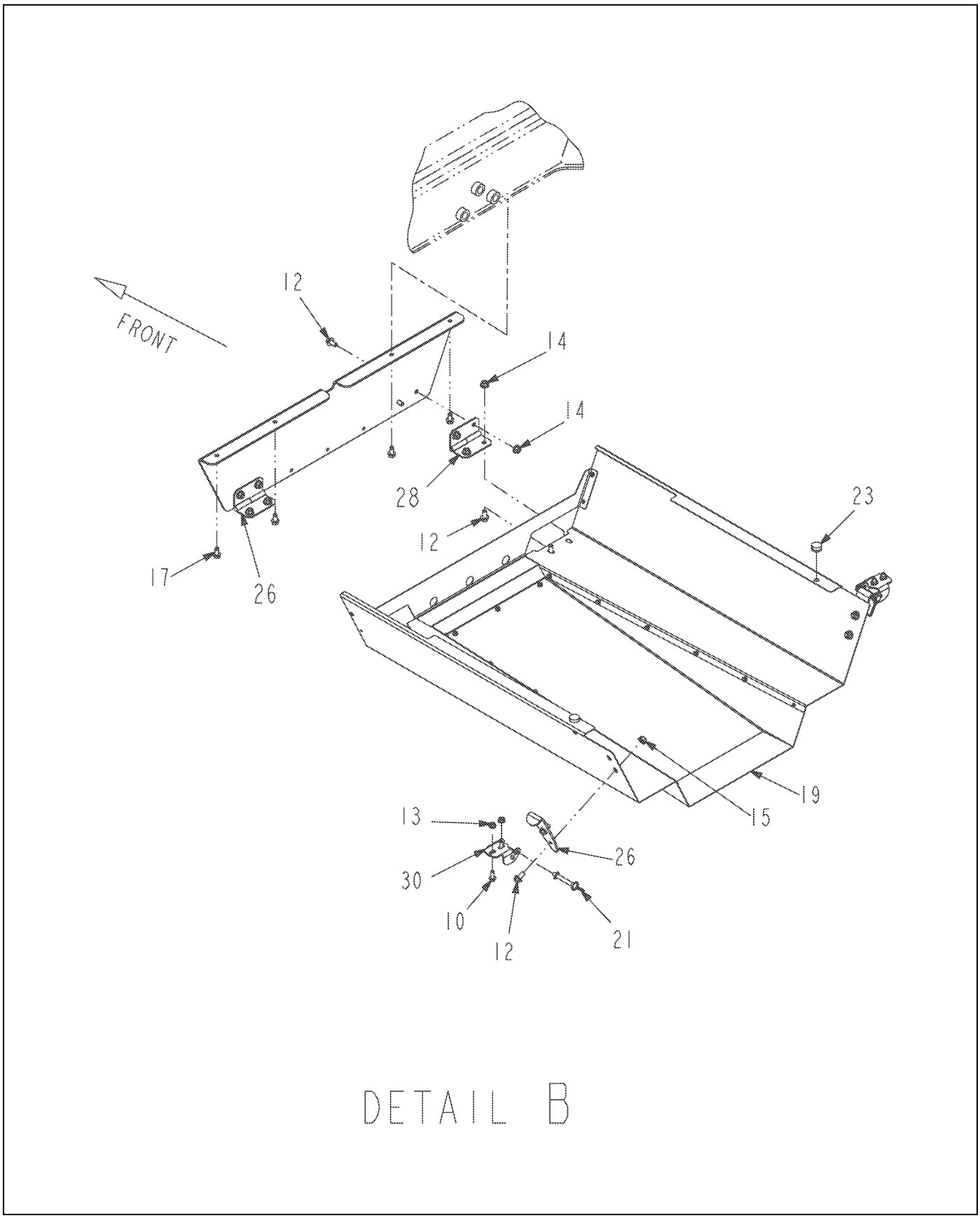

518560D1-01-R115-02.TIF

Copyright © 2007 AGCO Corporation

BELLY PAN INSTL-WF,AT

ITEM	PART #	QTY	DESCRIPTION	COMMENTS
10	WR55206	7	SCREW-HEX FLG,M8X1.25X20 CL8.8	
12	WR55214	27	SCREW-HEX FLG,M10X1.5X20 CL8.8	
13	WR55280	12	NUT-FLANGE,M8 X 1.25	
14	WR55281	28	NUT-FLANGE,M10 X 1.5	
15	WR55301	4	NUT-FLANGE,M10 X 1.5,PREV	
17	WR55349	4	SCREW-HEX,3/8 X 3/4,	
19	WR129523	1	SHIELD-CENTER ASM,ALLISON	SEE PAGE 22-9
21	6510020	3	PIN-SNAPPER	
23	6519178	6	BUMPER	
26	6626860	3	ANGLE	
28	6626862	1	HINGE	
30	6626921	3	EAR-LATCH	
	FOOTNOTE		EFFECTIVE Txx1001	

Copyright © 2007 AGCO Corporation

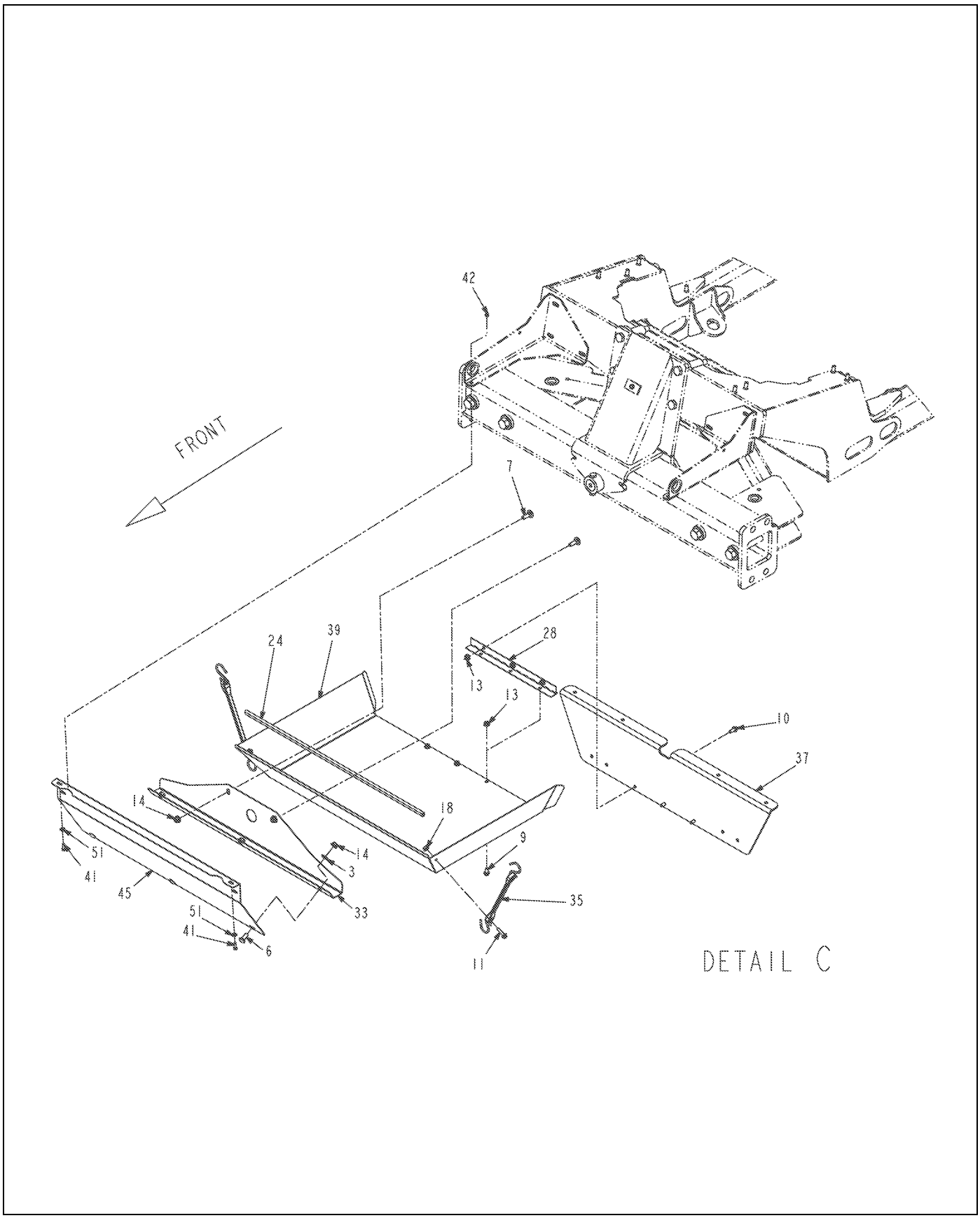

518560D1-01-R115-03.TIF

Copyright © 2007 AGCO Corporation

BELLY PAN INSTL-WF,AT

ITEM	PART #	QTY	DESCRIPTION	COMMENTS
3	WR55076	3	WASHER-PLAIN,12MM ID,LC,	
6	WR55173	5	BOLT-CARRIAGE,M10 X 25,	
7	WR55174	2	BOLT-CARRIAGE,M10 X 30,	
9	WR55205	3	SCREW-HEX FLG,M8X1.25X16 CL8.8	
10	WR55206	7	SCREW-HEX FLG,M8X1.25X20 CL8.8	
11	WR55208	2	SCREW-HEX FLG,M8X1.25X30 CL8.8	
13	WR55280	12	NUT-FLANGE,M8 X 1.25	
14	WR55281	28	NUT-FLANGE,M10 X 1.5	
18	WR55410	2	NUT-FLANGE,M8 X 1.25 CL8,	
24	6620417	-	RUBBER-STRIP [BULK: 108.334 FT]	
28	6626862	1	HINGE	
33	6627470	1	SUPPORT-SHIELD	
35	6660569	2	STRAP-RUBBER	
37	6800103	1	PLATE-BELLY PAN	
39	6801994	1	SHIELD-FRONT	
41	400221X1	2	BOLT-M6X1X20MM ZNDI HHD 10.9	
42	400300X1	2	NUT M6X1	
45	511411D1	1	SHIELD - FRONT	
51	CH8T-4205	2	WASHER-HARD 7.2IDX14.5ODX2MM	
	FOOTNOTE		EFFECTIVE Txx1001	

Copyright © 2007 AGCO Corporation

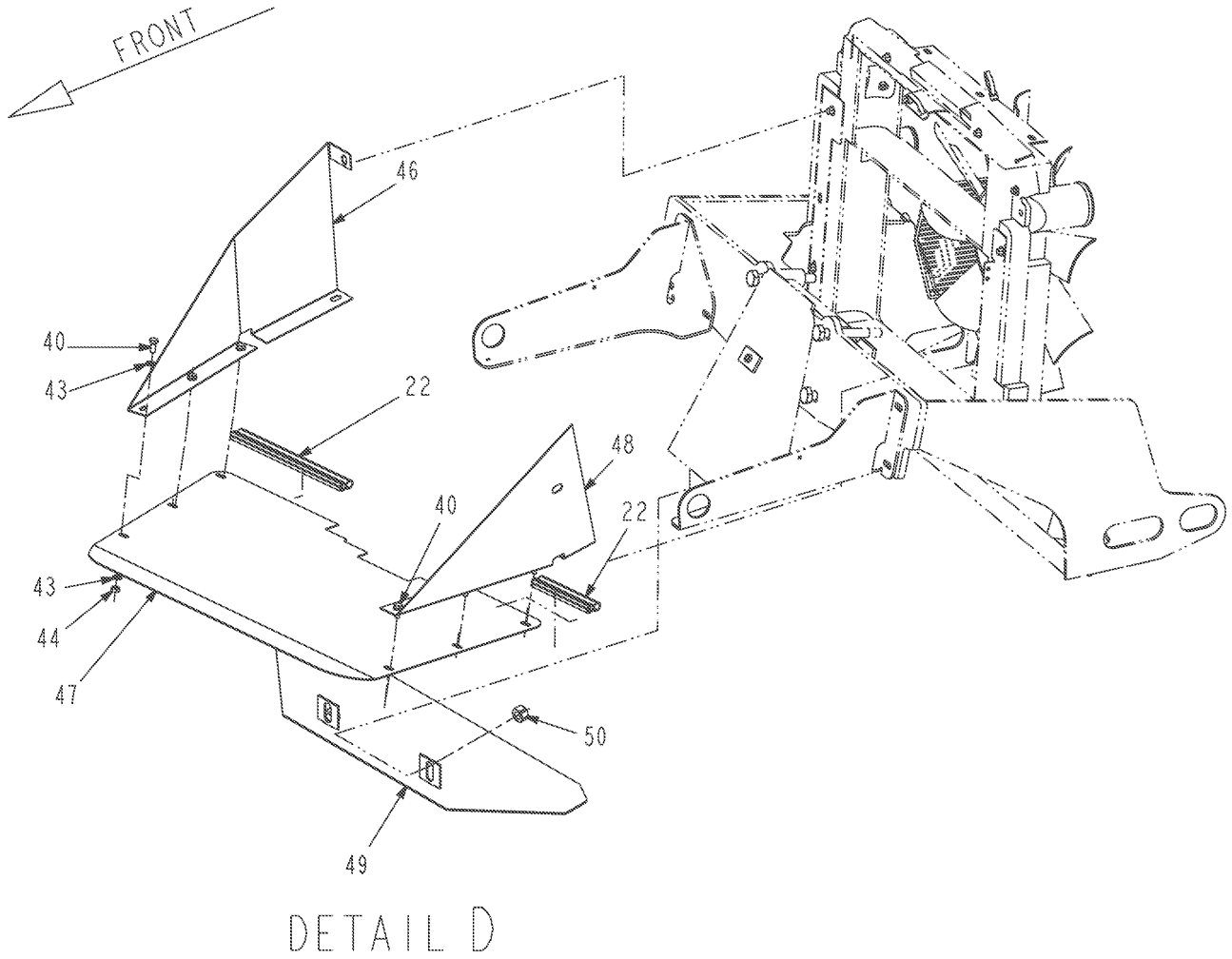

518560D1-01-R115-04.TIF

Copyright © 2007 AGCO Corporation

ITEM	PART #	QTY	DESCRIPTION	COMMENTS
22	6513152	-	SEAL [BULK: 34.084 FT]	
40	400053X1	6	BOLT-M8X1.25X20 ZNDI HHD 10.9	
43	400339X1	12	WASHER-HARD 9IDX16ODX2.5 ZNDI	
44	400340X1	6	NUT-M8X1.25X13 HEX ZND1	
46	511836D1	1	PLATE-COVER,RAD,RH	
47	511837D1	1	PLATE-COVER,RAD,LH	
48	511838D1	1	PLATE-COVER,RAD,LH	
49	511839D1	1	PLATE WLDMT-COVER,RDTR,LWR	
50	CH8T-4132	2	NUT-M16X2X14.8	
	FOOTNOTE		EFFECTIVE Txx1001	

Copyright © 2007 AGCO Corporation

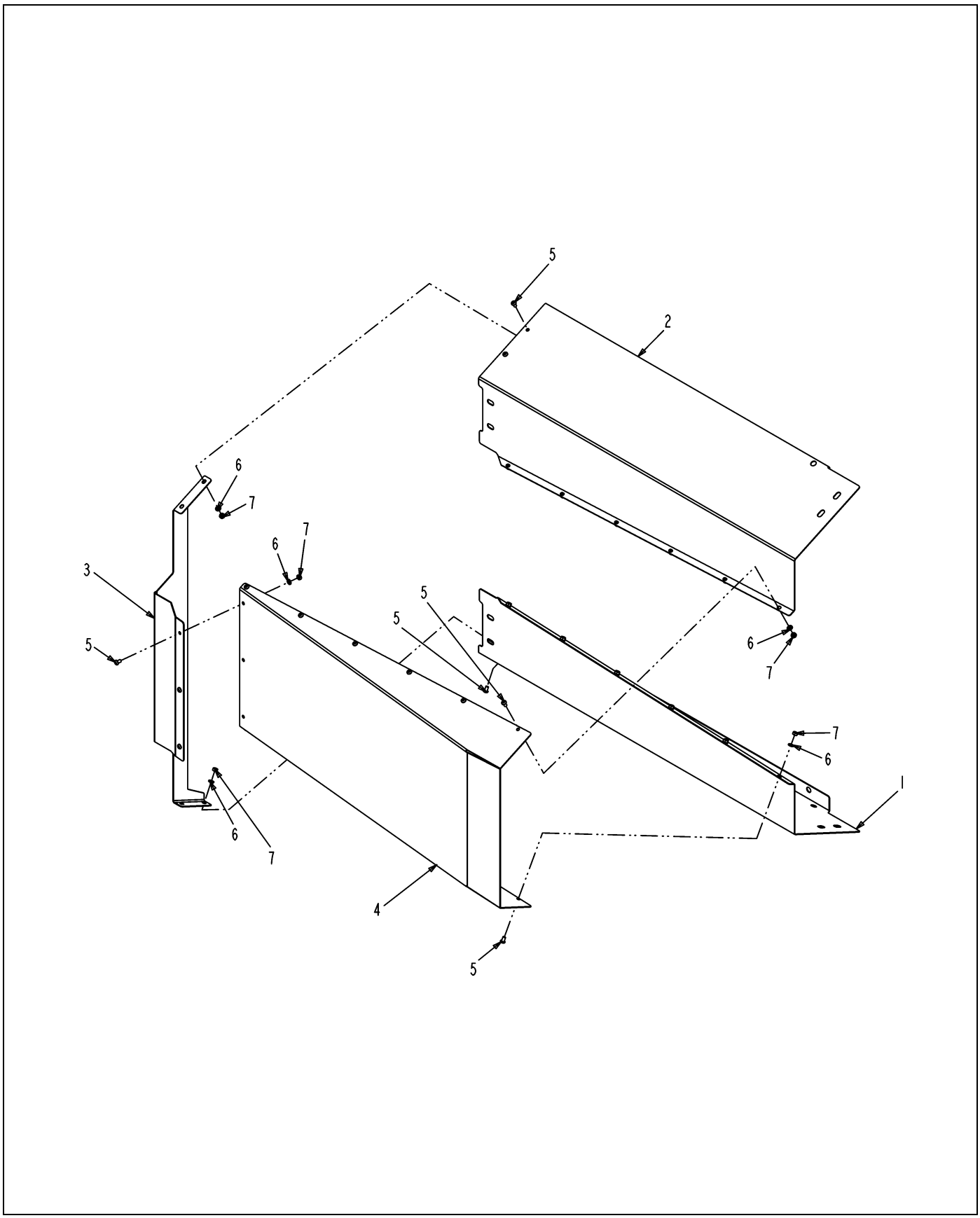

129523-B-M075-.TIF

Copyright © 2007 AGCO Corporation

SHIELD-CENTER ASM,ALLISON

ITEM	PART #	QTY	DESCRIPTION	COMMENTS
1	WR129815	1	SHIELD-CENTER,RIGHT,ALLISON	
2	WR129816	1	SHIELD-CENTER,LEFT,ALLISON	
3	WR129817	1	SHIELD-CENTER,END,ALLISON	
4	WR129818	1	SHIELD-CENTER,MIDDLE,ALLISON	
5	AG520742	19	SCR-M6-1.0X10,CL10.9,BLK,BHHS	
6	AG522242	19	WASHER-LK,M6,SS	
7	AG522243	19	NUT-M6-1.0,SS,H	

Copyright © 2007 AGCO Corporation

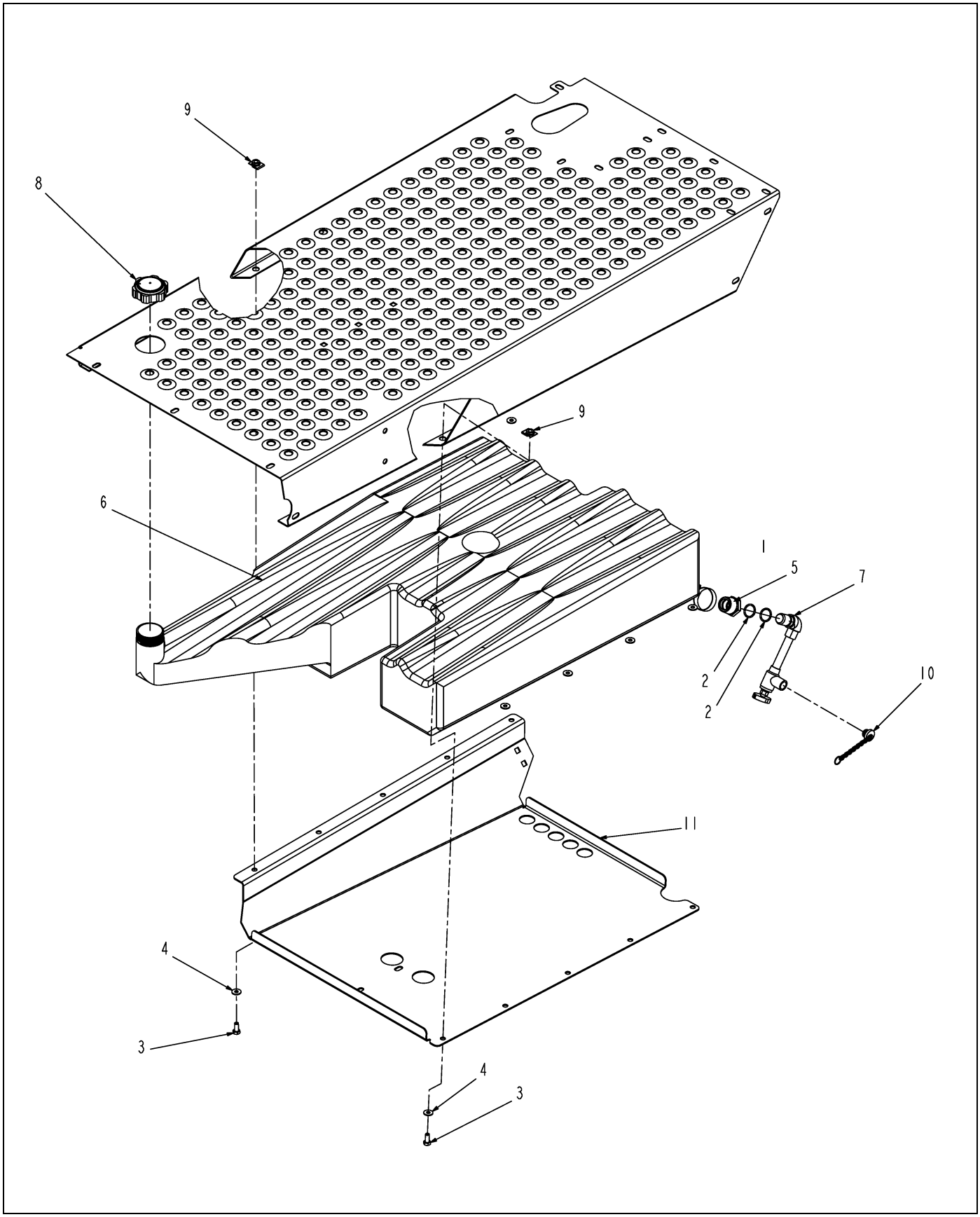

125685-02-N628-.TIF

Copyright © 2007 AGCO Corporation

FRESH WATER INSTL

ITEM	PART #	QTY	DESCRIPTION	COMMENTS
1	WR50847	1	CLAMP-HOSE,.75-1.75 SST	
2	WR55463	2	O RING-.812 ID,75 DURO	
3	AG550183	10	BOLT 0.31-18NCX 0.75 G5 ZN HHD	
4	AG550507	10	WASHER 0.25 FL ZN REG TYPE-B	
5	6626907	1	FITTING-DRAIN	
6	6626920	1	TANK-WATER	
7	6626922	1	VALVE ASSY	
8	6630034	1	CAP-FUEL TANK	
9	6662634	10	NUT-SELF RETAIN	
10	6662960	1	CAP-DUST	
11	6801522	1	SHIELD-TANK	

Copyright © 2007 AGCO Corporation

Please refer to the Bill Of Material on the opposite page for related Installations, Assemblies, or Parts

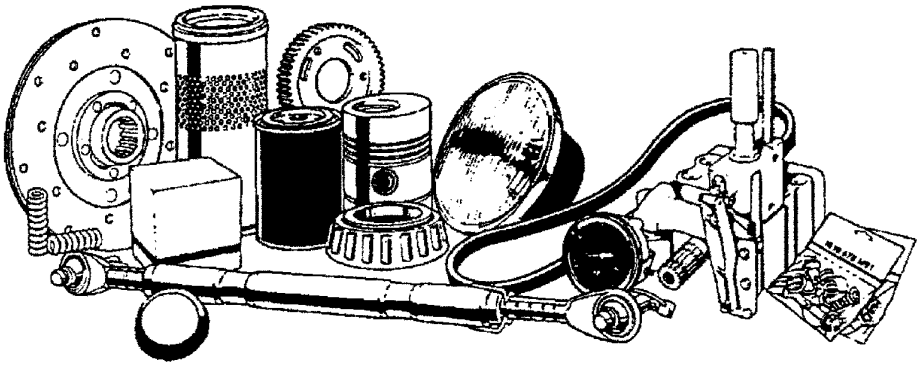

130579.TIF

Copyright © 2007 AGCO Corporation

F/A - 50 HR FILTER KIT

ITEM	PART #	QTY	DESCRIPTION	COMMENTS
1	WR127572	1	FUEL FILTER ELEMENT KIT	
2	WR133782	1	FILTER-WATER SEPARATOR KIT	
3	6515541	1	FILTER-HYD	
4	1447031M1	1	OIL FILTER	

Copyright © 2007 AGCO Corporation

Please refer to the Bill Of Material on the opposite page for related Installations, Assemblies, or Parts

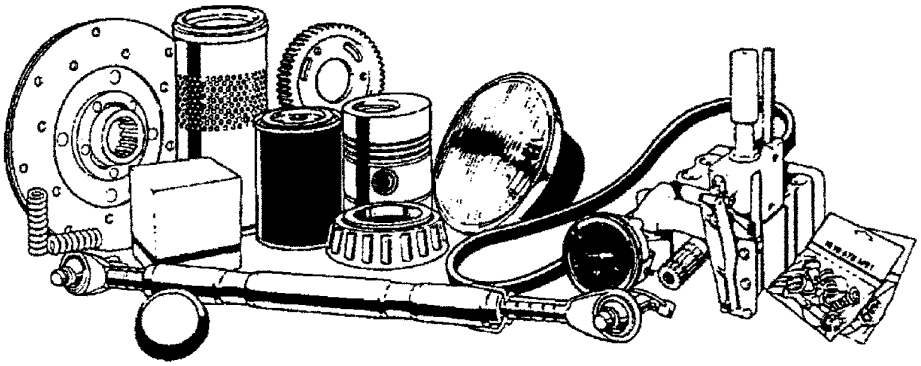

130580.TIF

Copyright © 2007 AGCO Corporation

F/A - 500 HR FILTER KIT

ITEM	PART #	QTY	DESCRIPTION	COMMENTS
1	WR127271	1	FILTER,PRIMARY,AIR	
2	WR127272	1	FILTER,SAFETY,AIR	
3	WR127572	2	FUEL FILTER ELEMENT KIT	
4	WR129616	1	FILTER-OIL,TRANSMISSION	
5	WR133782	1	FILTER-WATER SEPARATOR KIT	
6	6515541	2	FILTER-HYD	
7	6671706	1	FILTER-CARBON	
8	1447031M1	2	OIL FILTER	

Copyright © 2007 AGCO Corporation

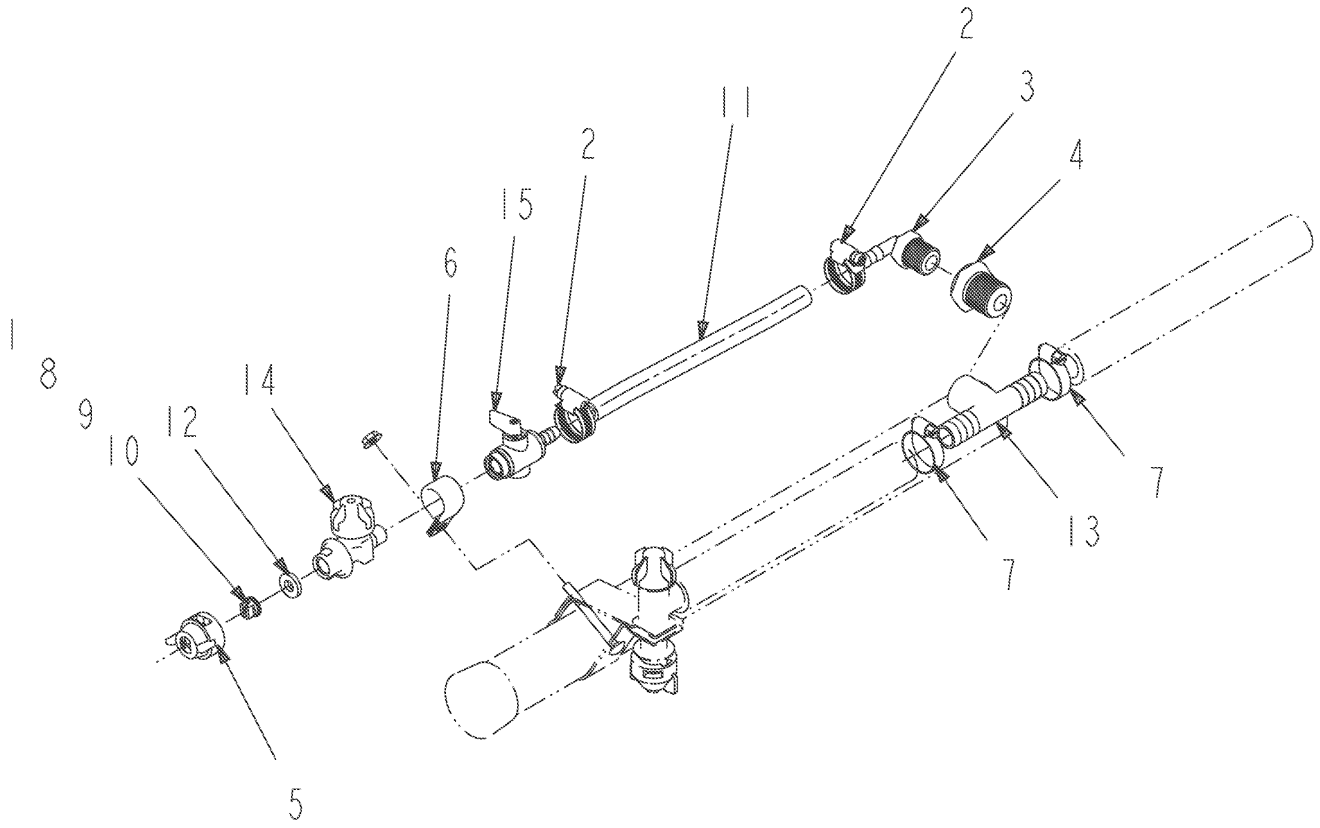

131686-02-M485-.TIF

Copyright © 2007 AGCO Corporation

OVERSPRAY INSTL

ITEM	PART #	QTY	DESCRIPTION	COMMENTS
1	AG001344	2	TIP OC 12BR	
2	WR10852	4	CLAMP-HOSE,25/32 SST,	
3	AG055191	2	CAP,NOZZLE BLACK	
4	WR55235	2	CLAMP-SUPPORT CUSHION,	
5	AG561229	4	CLAMP 0.68-1.25 HOSE 12HS	
6	6610341	2	TIP-BRASS,200	
7	6610342	2	TIP-BRASS,800	
8	6610348	2	TIP-BRASS,600	
10	6630910	2	GASKET-SEAT	
11	6630914	2	TEE	
13	6631481	2	VALVE-CHECK,DIAPHRAGM,	
14	6631491	2	VALVE-BALL	

Copyright © 2007 AGCO Corporation

NUMERIC INDEX

1023368	8-15
1312337	7-30
136-5598	11-8
1447031M1	22-11
1447031M1	22-12
1545622	12-5
1545623	12-1
1657089	3-13
197-4520	8-8
197-4521	8-12
197-4527	8-12
197-4527	8-8
222-2281	14-10
222-2281	14-11
222-2281	14-3
2504534B	21-3
2504534B	21-4
3739149	3-13
377561X1	1-9
400021X1	12-6
400053X1	22-8
400058X1	12-1
400191X1	18-38
400221X1	22-7
400287X1	12-1
400300X1	22-7
400339X1	22-8
400340X1	10-4
400340X1	1-3
400340X1	22-8
400340X1	7-19
400340X1	7-22
400665X1	6-1
401002X1	7-16
401022X1	5-14
401022X1	5-15
401022X1	5-17
401023X1	5-14
401023X1	5-15
401023X1	5-17
401276X1	16-1
401277X1	16-1
401348X1	4-10
401348X1	4-12
401348X1	4-13
401348X1	4-14
401348X1	4-17
401348X1	4-18
401348X1	4-19
401348X1	4-8
401349X1	4-11
401349X1	4-12
401349X1	4-13
401349X1	4-14
401349X1	4-16
401349X1	4-18
401349X1	4-19
401349X1	4-9
401463X1	19-51
401469X1	6-1
401494X1	19-2
40552PF	19-51
4222433M1	7-31
4274275M91	12-2
500749D1	14-10
500749D1	14-11
500749D1	14-7
500749D1	14-9
501103D1	14-14
501103D1	14-19
501998D1	10-6
503475D1	18-3
503475D1	18-8
503898D1	10-1
503899D1	10-1
503932D1	13-10
503932D1	13-11
503932D1	13-18
503932D1	13-19
504038D1	14-10
504038D1	14-11
504038D1	14-7
504038D1	14-9
504071D1	12-2
504072D1	12-4
504072D1	12-5
504075D1	12-4
504075D1	12-5
504076D1	12-4
504076D1	12-5
504077D1	12-5
504077D1	12-6
504078D1	12-6
504212D1	19-3
504213D1	19-9
504214D1	19-11
504214D1	19-6
504239D1	19-10
504239D1	19-13
504239D1	19-7
504331D1	19-8
504333D1	19-8
504336D1	19-8
504341D1	19-10
504341D1	19-13
504341D1	19-7
504433D1	13-12
504433D1	13-22
504433D1	13-9
504434D1	13-12
504434D1	13-22
504434D1	13-9
504436D1	13-14
504436D1	13-16
504440D1	13-10
504440D1	13-11
504440D1	13-18
504440D1	13-19
504732D1	8-17
504733D1	8-17
504734D1	8-17
504925D1	8-3
504951D1	14-3
505081D1	11-5
505082D1	11-6
505215D1	12-1
505295D1	18-11
505391D1	19-10
505391D1	19-13
505391D1	19-7
505392D1	19-10
505392D1	19-13
505392D1	19-7
505401D1	5-14
505401D1	5-15
505401D1	5-17
505402D1	5-15
505402D1	5-17
505516D1	18-6
505596D1	12-5
505605D1	1-3
505992D1	14-5
506009D1	1-3
506010D1	12-4
506010D1	12-5
506243D1	11-5
506243D1	11-7
506244D1	11-5
506244D1	11-7
506245D1	11-5
506245D1	11-7
506246D1	11-5
506246D1	11-7
506307D1	10-6
506308D1	10-1
506432D1	19-26
506432D1	19-27
506432D1	19-30
506433D1	19-27
506433D1	19-28
506434D1	19-28
506434D1	19-29
506435D1	19-32
506435D1	19-38
506436D1	19-35
506436D1	19-37
506437D1	19-31
506437D1	19-33
506437D1	19-34
506437D1	19-36
506437D1	19-39
506438D1	19-25
506438D1	19-42
506439D1	19-25
506439D1	19-42
506440D1	19-25
506440D1	19-42

NUMERIC INDEX

506441D1 19-25
506441D1 19-42
506442D1 19-25
506442D1 19-42
506443D1 19-25
506443D1 19-42
506444D1 19-25
506445D1 19-25
506445D1 19-42
506446D1 19-25
506446D1 19-42
506503D1 18-16
506590D1 8-13
506591D1 8-13
506592D1 8-13
506691D1 19-42
506692D1 19-42
506693D1 19-42
506694D1 19-42
506695D1 19-42
506696D1 19-43
506696D1 19-47
506697D1 19-43
506697D1 19-44
506697D1 19-47
506698D1 19-45
506698D1 19-46
506699D1 19-46
506946D1 8-16
506957D1 13-16
507034D1 12-1
507035D1 12-4
507169D1 8-13
507170D1 8-17
507203D1 8-6
507204D1 8-9
507205D1 8-7
507206D1 8-10
507301D1 19-3
507511D1 3-9
507512D1 3-10
507513D1 3-4
507514D1 3-6
507916D1 19-11
507916D1 3-17
507916D1 7-47
507916D1 7-50
507983D1 4-20
507984D1 4-21
508209D1 20-12
508209D1 20-13
508213D1 2-1
508213D1 3-1
508214D1 10-5
508214D1 2-1
508215D1 3-1
508226D1 10-10
508226D1 10-5
508238D1 8-12
508238D1 8-8
508256D1 8-12
508262D1 8-12
508262D1 8-8
508263D1 8-12
508447D1 8-17
508450D1 8-13
508515D1 19-25
508515D1 19-42
508541D1 8-13
508542D1 12-3
508543D1 12-3
508544D1 12-3
508545D1 12-3
508546D1 12-3
508547D1 1-4
508548D1 8-13
508549D1 8-13
508550D1 8-13
508551D1 8-13
508577D1 10-6
508577D1 10-7
508676D1 22-1
508677D1 22-3
508922D1 5-5
508922D1 5-7
508922D1 5-9
508964D1 18-9
508965D1 18-29
509013D1 18-29
509522D1 10-2
509523D1 10-10
509523D1 10-9
509630D1 8-18
509631D1 8-20
509632D1 8-22
509637D1 8-19
509644D1 11-7
511017D1 7-19
511017D1 7-22
511018D1 7-19
511018D1 7-22
511095D1 14-14
511096D1 14-19
511104D1 8-24
511105D1 8-24
511107D1 14-12
511107D1 14-16
511108D1 14-17
511108D1 14-21
511108D1 14-5
511127D1 14-14
511128D1 14-19
511128D1 14-3
511143D1 14-14
511144D1 14-19
511147D1 14-12
511147D1 14-17
511175D1 5-10
511175D1 5-11
511176D1 5-10
511176D1 5-11
511177D1 5-10
511177D1 5-11
511178D1 5-10
511179D1 5-11
511180D1 5-10
511180D1 5-11
511181D1 5-10
511181D1 5-11
511182D1 5-10
511182D1 5-11
511199D1 14-16
511200D1 14-21
511200D1 14-5
511201D1 14-16
511202D1 14-21
511202D1 14-5
511203D1 14-16
511204D1 14-21
511204D1 14-5
511205D1 14-14
511205D1 14-16
511206D1 14-19
511206D1 14-21
511206D1 14-5
511207D1 14-14
511207D1 14-16
511208D1 14-19
511208D1 14-21
511208D1 14-5
511209D1 14-14
511209D1 14-16
511210D1 14-19
511210D1 14-21
511210D1 14-5
511398D1 8-24
511402D1 7-20
511411D1 22-7
511412D1 14-15
511413D1 14-20
511415D1 14-15
511416D1 14-20
511466D1 10-8
511625D1 5-10
511625D1 5-11
511631D1 10-6
511768D1 1-3
511828D1 10-2
511836D1 22-8
511837D1 22-8
511838D1 22-8
511839D1 22-8
511921D1 8-14
511970D1 8-11
511993D1 8-23
512505D1 19-11
512505D1 19-12

NUMERIC INDEX

512505D1 19-6
512505D1 19-9
512948D1 14-6
513047D1 1-6
513111D1 1-3
513170D1 9-4
513171D1 9-4
513172D1 9-1
513172D1 9-3
513172D1 9-4
513173D1 9-4
513174D1 9-4
513175D1 9-4
513176D1 9-4
513178D1 9-3
513180D1 9-3
513181D1 9-3
513182D1 9-3
513183D1 9-1
513183D1 9-3
513184D1 9-3
513185D1 9-3
513192D1 9-1
513193D1 9-1
513194D1 9-1
513195D1 9-1
513197D1 9-1
513198D1 9-1
513199D1 9-1
513201D1 9-1
513202D1 9-2
513383D1 13-5
513383D1 13-6
513384D1 13-2
513384D1 13-3
513387D1 13-5
513387D1 13-6
513388D1 13-2
513388D1 13-3
513389D1 13-18
513389D1 13-19
513396D1 13-17
513396D1 13-23
513397D1 13-17
513397D1 13-23
513398D1 13-4
513398D1 13-8
513399D1 13-4
513399D1 13-8
513400D1 13-1
513400D1 13-7
513401D1 13-1
513401D1 13-7
513483D1 7-15
513687D1 8-3
513688D1 8-3
513767D1 1-1
513768D1 1-1
513770D1 1-12
513774D1 10-2
513776D1 10-2
513828D1 8-12
513828D1 8-8
513829D1 8-12
513829D1 8-8
513830D1 8-12
513830D1 8-8
513831D1 8-12
513831D1 8-8
513832D1 8-12
513832D1 8-8
513833D1 8-8
513834D1 8-12
513965D1 8-24
514115D1 9-4
514117D1 9-4
514118D1 9-1
514119D1 9-4
514121D1 9-4
514122D1 9-3
514124D1 9-2
514125D1 9-2
514126D1 9-2
514129D1 9-2
514130D1 9-2
514131D1 9-1
514131D1 9-4
514133D1 9-2
514134D1 9-2
514261D1 3-10
514261D1 3-4
514261D1 3-6
514261D1 3-9
514430D1 12-1
514431D1 12-1
514432D1 12-1
514433D1 12-1
514534D1 14-8
514544D1 3-16
514544D1 3-17
514828D1 20-1
514829D1 20-1
514830D1 20-1
514830D1 20-2
514832D1 20-5
514833D1 20-5
514834D1 20-5
514834D1 20-6
514877D1 1-9
514905D2 8-24
514906D1 8-18
514906D1 8-20
514906D1 8-22
514913D1 8-21
515238D1 12-3
515284D1 19-1
515285D1 19-51
515286D1 19-51
515288D1 8-13
515441D1 11-5
515441D1 11-7
515523D1 10-9
515734D1 6-1
515744D1 6-1
515745D1 10-7
515749D1 6-1
515752D1 7-18
515752D1 7-21
515755D1 8-2
515768D1 6-1
515769D1 7-18
515769D1 7-21
515770D1 7-18
515770D1 7-21
515771D1 7-25
515771D1 7-33
515772D1 7-25
515772D1 7-33
515774D1 7-25
515774D1 7-33
515777D1 1-9
516021D1 9-1
516021D1 9-2
516022D1 9-2
516023D1 9-1
516052D1 13-14
516052D1 13-16
516062D1 13-13
516062D1 13-20
516063D1 13-15
516063D1 13-21
516125D1 14-11
516125D1 14-9
516126D1 14-10
516126D1 14-7
516430D1 9-2
516431D1 9-1
516432D1 9-1
516448D1 7-56
516700D1 7-59
516790D1 14-10
516790D1 14-11
516790D1 14-7
516790D1 14-9
516791D1 14-10
516791D1 14-11
516791D1 14-7
516791D1 14-9
516847D1 19-51
516881D1 11-5
516881D1 11-7
516882D1 11-5
516882D1 11-7
516942D1 7-59
516943D1 7-23
516943D1 7-33
516953D1 5-15

NUMERIC INDEX

516954D1 5-17
517519D1 18-11
517521D1 10-9
517522D1 10-9
517541D1 6-1
517542D1 6-1
517543D1 6-1
517544D1 7-25
517544D1 7-33
517545D1 7-25
517545D1 7-33
517615D1 19-12
518408D1 18-10
518409D1 18-11
518410D1 18-11
518411D1 18-11
518573D1 16-1
518574D1 19-2
518798D1 1-3
519024D1 4-15
519024D1 4-16
519024D1 4-18
519024D1 4-19
519234D1 19-2
519235D1 19-2
519382D1 1-3
519537D1 13-12
519538D1 13-4
519539D1 13-7
519603D1 14-12
519603D1 14-17
519604D1 14-16
519605D1 14-21
519610D1 14-13
519611D1 14-18
519653D1 3-3
519654D1 3-3
519656D1 3-8
519657D1 3-8
519659D1 14-14
519660D1 14-19
519661D1 14-12
519662D1 14-17
519935D1 1-1
520019D1 13-12
520019D1 13-13
520019D1 13-15
520019D1 13-17
520019D1 13-20
520019D1 13-21
520019D1 13-22
520019D1 13-23
520019D1 13-4
520019D1 13-8
520019D1 13-9
520020D1 13-1
520020D1 13-7
520090D1 1-6
520093D1 1-1
520094D1 12-3
520095D1 14-16
520095D1 14-21
520096D1 14-13
520096D1 14-18
520097D1 14-14
520097D1 14-19
520098D1 14-12
520098D1 14-17
520099D1 14-13
520099D1 14-18
520100D1 14-15
520100D1 14-20
520326D1 8-2
520327D1 8-2
520571D1 10-4
5208547B 3-12
520889D1 19-12
521049D1 14-13
521049D1 14-18
521050D1 14-13
521050D1 14-18
521051D1 14-13
521051D1 14-18
521052D1 14-13
521052D1 14-18
6503213 22-4
6503451 10-10
6503451 1-4
6503451 22-1
6503451 22-3
6504880 22-1
6504880 22-3
6505013 18-28
6505013 18-33
6507096 18-17
6507096 18-18
6507096 18-21
6507096 18-23
6507096 18-24
6507096 18-25
6507096 18-26
6507096 18-32
6510020 22-5
6510020 22-6
6510020 7-37
6510020 7-40
6511103 19-19
6511103 19-23
6511103 19-24
6511103 19-3
6511330 5-14
6511330 5-15
6511330 5-17
6511331 5-14
6511331 5-15
6511331 5-17
6512905 16-1
6512954 8-2
6513152 1-3
6513152 22-8
6513441 5-14
6513441 5-15
6513441 5-17
6515541 22-11
6515541 22-12
6515541 7-55
6517924 10-2
6519178 22-5
6519178 22-6
6519752 18-38
6519925 5-14
6519925 5-15
6519925 5-17
6519926 5-14
6519926 5-15
6519926 5-17
6529638 14-6
6530360 18-11
6530360 18-14
6530360 18-38
6530360 3-10
6530360 3-4
6530360 3-6
6530360 3-9
6531180 22-2
6531180 22-4
6533975 10-13
6533975 18-41
6533975 4-10
6533975 4-12
6533975 4-13
6533975 4-14
6533975 4-16
6533975 4-18
6533975 4-19
6533975 4-8
6535422 7-11
6535422 7-24
6535422 7-26
6535422 7-32
6535422 7-34
6535422 7-47
6535422 7-8
6536129 7-24
6536129 7-32
6537283 7-11
6537283 7-47
6537283 7-48
6537283 7-50
6537416 18-30
6537416 18-31
6537416 4-10
6537416 4-14
6537416 4-16
6537416 4-8
6538286 18-11
6538286 18-34

NUMERIC INDEX

6538287 18-15
6538287 18-17
6538287 18-2
6538287 18-21
6538287 18-23
6538287 18-25
6538287 18-32
6538287 18-39
6538287 18-7
6539697 10-13
6553411 19-2
6553411 6-1
6553412 6-1
6555350 8-13
6557904 10-2
6562619 7-27
6562619 7-29
6564669 5-14
6564669 5-15
6564669 5-17
6565114 1-1
6565114 1-3
6565433 7-19
6565433 7-22
6565947 3-10
6565947 3-4
6565947 3-6
6565947 3-9
6569461 3-3
6569461 3-8
6577696 7-11
6577696 7-18
6577696 7-21
6577696 7-26
6577696 7-34
6577696 7-37
6577696 7-40
6577696 7-47
6577696 7-50
6577696 7-56
6577697 7-26
6577697 7-34
6577697 7-35
6577697 7-9
6577754 12-1
6577754 4-10
6577754 4-12
6577754 4-13
6577754 4-14
6577754 4-16
6577754 4-18
6577754 4-19
6577754 4-8
6578209 7-54
6578870 7-11
6578870 7-24
6578870 7-26
6578870 7-32
6578870 7-34
6578870 7-47
6578870 7-8
6579858 10-10
6584225 18-18
6584225 18-21
6584225 18-24
6584225 18-26
6587032 7-11
6587032 7-47
6587032 7-48
6588293 4-10
6588293 4-12
6588293 4-13
6588293 4-14
6588293 4-16
6588293 4-18
6588293 4-19
6588293 4-8
6589193 7-52
6589675 10-1
6589675 8-15
6589739 14-3
6593359 3-13
6595112 8-13
6595398 5-14
6595398 5-17
6595399 4-1
6595400 4-6
6595454 4-7
6595455 4-2
6595456 5-15
6595684 19-3
6595786 1-11
6595786 1-6
6595786 19-19
6595786 19-23
6595786 19-41
6595786 6-1
6595786 7-57
6595825 19-19
6595825 19-23
6595862 19-41
6596121 19-3
6596456 12-1
6596632 22-2
6596633 22-2
6596640 22-2
6596641 22-2
6596643 22-2
6596645 22-2
6597025 7-28
6597025 7-29
6597026 7-28
6597026 7-29
6597223 22-1
6597223 22-3
6597317 8-13
6597791 7-35
6597793 3-11
6597793 5-12
6597793 5-13
6597793 5-5
6597793 5-7
6597793 5-9
6597879 7-27
6597932 10-2
6597933 10-2
6597934 10-12
6597934 10-15
6597935 10-12
6597935 10-15
6597936 10-12
6597936 10-15
6597939 10-12
6597939 10-15
6597940 10-12
6597940 10-15
6597941 10-2
6597943 10-2
6597944 10-2
6597946 10-2
6597947 10-2
6597948 10-15
6597949 10-15
6597950 10-15
6597954 14-1
6597955 14-1
6597956 14-1
6597957 14-1
6597958 14-3
6597990 10-2
6598445 3-12
6598452 3-12
6598455 3-12
6598849 3-12
6598937 3-13
6610264 18-32
6610264 3-17
6610341 22-13
6610342 22-13
6610348 22-13
6610653 19-52
6611576 19-14
6611577 19-14
6612233 14-8
6612234 14-12
6612234 14-15
6612234 14-17
6612234 14-20
6612234 14-4
6612234 14-8
6612940 21-1
6613050 18-17
6613050 18-19
6613050 18-2
6613050 18-20
6613050 18-21
6613050 18-23

NUMERIC INDEX

6613050 18-25
6613050 18-32
6613050 18-7
6616209 19-52
6616767 19-52
6617316 3-10
6617316 3-9
6617401 10-6
6617472 3-10
6617472 3-4
6617472 3-6
6617472 3-9
6617492 19-19
6617492 19-23
6617492 19-24
6617492 19-41
6617494 19-19
6617494 19-24
6617495 19-19
6617495 19-23
6617496 19-19
6617498 19-19
6617498 19-23
6617498 19-24
6617498 19-41
6617524 8-2
6617533 22-4
6617534 22-4
6617579 18-17
6617579 18-21
6617579 18-23
6617579 18-25
6617579 18-32
6617579 22-1
6617579 22-3
6617582 18-17
6617582 18-21
6617582 18-23
6617582 18-25
6617582 18-32
6617585 18-40
6617676 22-2
6617676 22-4
6617765 18-40
6617780 18-40
6617897 18-31
6617897 4-10
6617897 4-14
6617897 4-16
6617897 4-8
6618175 18-32
6618175 18-33
6618175 7-11
6618187 18-32
6618187 18-33
6618187 7-11
6618196 7-37
6618196 7-40
6618197 7-26
6618227 18-39
6618227 7-11
6618341 19-4
6618366 20-11
6618366 20-9
6618369 20-10
6618395 8-2
6618540 5-14
6618540 5-15
6618540 5-17
6618542 5-14
6618542 5-15
6618542 5-17
6618562 5-14
6618562 5-15
6618562 5-17
6618620 3-3
6618620 3-8
6618833 18-16
6618833 18-36
6618835 18-36
6618836 18-10
6618836 18-13
6618836 18-16
6618836 18-35
6618836 18-36
6618836 18-42
6618836 7-35
6618840 18-38
6618841 18-38
6618845 3-10
6618845 3-4
6618845 3-6
6618845 3-9
6618959 10-7
6620015 14-12
6620015 14-17
6620015 14-4
6620133 18-27
6620133 18-40
6620133 21-2
6620327 8-2
6620331 8-2
6620417 18-17
6620417 18-21
6620417 18-23
6620417 18-25
6620417 22-7
6620467 16-1
6620675 19-52
6623263 18-14
6623263 18-2
6623263 18-39
6623263 18-8
6624328 19-15
6624680 18-38
6624692 18-38
6625282 8-2
6626010 18-17
6626010 18-23
6626011 18-21
6626011 18-25
6626119 18-17
6626119 18-18
6626119 18-21
6626119 18-23
6626119 18-24
6626119 18-25
6626119 18-26
6626119 18-40
6626119 19-11
6626119 19-12
6626119 19-3
6626119 19-6
6626119 19-9
6626119 7-56
6626121 19-18
6626121 19-22
6626121 19-41
6626122 19-18
6626122 19-22
6626122 19-41
6626146 1-11
6626165 5-14
6626165 5-15
6626165 5-17
6626198 18-17
6626198 18-21
6626198 18-23
6626198 18-25
6626213 5-14
6626213 5-15
6626213 5-17
6626218 3-3
6626218 3-8
6626327 18-31
6626327 4-10
6626327 4-14
6626327 4-16
6626327 4-8
6626353 4-10
6626353 4-14
6626353 4-16
6626353 4-8
6626401 18-11
6626401 18-17
6626401 18-2
6626401 18-21
6626401 18-23
6626401 18-25
6626401 18-32
6626401 18-4
6626401 18-5
6626401 18-7
6626414 7-19
6626414 7-22
6626432 10-6
6626498 4-10

NUMERIC INDEX

6626498 4-12
6626498 4-13
6626498 4-14
6626498 4-16
6626498 4-18
6626498 4-19
6626498 4-8
6626510 8-15
6626527 7-19
6626527 7-22
6626535 8-14
6626580 7-11
6626580 7-47
6626597 8-13
6626598 8-13
6626606 7-55
6626623 4-10
6626623 4-14
6626623 4-16
6626623 4-8
6626631 19-3
6626650 7-55
6626654 6-1
6626661 18-36
6626663 18-16
6626663 18-36
6626690 18-18
6626690 18-21
6626691 18-17
6626691 18-21
6626691 18-23
6626691 18-25
6626692 18-17
6626692 18-21
6626692 18-23
6626692 18-25
6626697 7-24
6626697 7-26
6626697 7-32
6626697 7-34
6626766 8-13
6626767 8-13
6626768 8-13
6626769 8-13
6626770 8-13
6626771 8-13
6626772 8-13
6626773 8-13
6626774 8-13
6626775 8-13
6626776 8-13
6626777 8-13
6626778 8-13
6626780 8-13
6626781 8-13
6626782 8-13
6626787 14-2
6626810 18-16
6626810 18-36
6626817 14-6
6626826 22-5
6626840 8-13
6626860 22-5
6626860 22-6
6626861 22-5
6626862 22-6
6626862 22-7
6626869 22-5
6626875 22-1
6626875 22-2
6626875 22-3
6626876 22-1
6626876 22-3
6626877 22-1
6626877 22-3
6626900 22-1
6626900 22-2
6626900 22-3
6626901 22-1
6626901 22-3
6626902 22-1
6626902 22-3
6626907 22-10
6626908 14-3
6626920 22-10
6626921 22-5
6626921 22-6
6626922 22-10
6626923 20-11
6626924 3-4
6626924 3-6
6626929 18-38
6626941 5-18
6626942 5-18
6626943 5-18
6626948 5-18
6626950 5-18
6626991 18-36
6627005 8-15
6627019 14-3
6627020 14-3
6627046 20-11
6627046 20-9
6627047 20-9
6627054 8-2
6627230 1-11
6627252 22-4
6627253 22-4
6627254 22-4
6627255 22-4
6627256 22-4
6627257 22-4
6627258 22-4
6627262 22-4
6627278 22-4
6627279 22-4
6627280 22-4
6627281 22-4
6627282 22-4
6627290 5-18
6627316 5-14
6627316 5-15
6627316 5-17
6627345 5-4
6627378 22-1
6627378 22-3
6627405 7-22
6627406 7-22
6627414 22-5
6627436 22-1
6627436 22-3
6627458 22-5
6627461 7-37
6627461 7-40
6627470 22-7
6627498 22-1
6627498 22-3
6627499 22-1
6627499 22-3
6627528 8-13
6627540 4-4
6627540 4-5
6627548 7-37
6627548 7-40
6627561 4-5
6627562 4-5
6627634 7-24
6627634 7-32
6627679 4-4
6627680 4-4
6627859 4-10
6627859 4-13
6627860 4-12
6627860 4-18
6627860 4-19
6627860 4-8
6627886 8-14
6627918 1-9
6628003 8-2
6628352 8-15
6628372 10-7
6628550 14-3
6630034 22-10
6630140 8-15
6630207 22-5
6630585 11-5
6630585 11-7
6630910 22-13
6630914 19-23
6630914 19-24
6630914 19-41
6630914 22-13
6631481 22-13
6631491 22-13
6631675 21-4
6631678 21-3
6631680 21-3

NUMERIC INDEX

6631683 21-4
6631684 21-4
6632180 10-2
6632417 10-17
6632418 10-17
6632419 10-17
6632420 10-17
6632421 10-17
6632428 10-17
6632429 10-17
6632430 10-17
6632432 10-17
6632433 10-17
6632434 10-17
6632436 10-17
6632441 10-17
6632468 7-59
6632476 21-4
6632477 21-4
6632478 21-4
6632486 21-4
6632492 21-1
6632500 21-4
6632502 21-1
6633096 3-12
6633446 18-17
6633446 18-21
6633446 18-23
6633446 18-25
6633446 18-32
6633635 21-4
6633636 21-4
6633637 19-20
6633637 19-21
6633638 19-20
6633638 19-21
6634143 3-12
6634145 3-12
6634581 3-12
6634583 3-12
6634586 3-12
6634589 3-12
6634761 3-10
6634761 3-4
6634761 3-6
6634761 3-9
6644960 10-3
6645812 3-13
6646598 12-1
6647887 10-12
6647887 10-15
6647887 10-2
6648354 8-15
6648413 8-15
6648414 8-15
6648417 8-15
6648421 8-15
6648422 8-15
6648451 19-1
6648975 3-12
6648976 3-12
6649040 12-1
6649040 4-10
6649040 4-12
6649040 4-13
6649040 4-14
6649040 4-16
6649040 4-18
6649040 4-19
6649040 4-8
6649519 19-1
6649519 19-2
6649519 19-3
6649649 17-1
6649706 4-3
6649706 4-4
6649706 4-5
6652521 7-11
6652521 7-18
6652521 7-21
6652521 7-26
6652521 7-34
6652521 7-35
6652521 7-37
6652521 7-40
6652521 7-47
6652521 7-50
6652521 7-56
6652521 7-9
6652943 3-13
6653332 10-12
6653332 10-15
6653332 10-2
6653763 1-1
6654147 8-15
6654154 8-15
6654785 8-15
6655593 21-4
6655594 21-4
6655595 21-4
6655596 21-4
6655597 21-4
6655598 21-4
6655599 21-4
6655600 21-4
6655601 21-4
6655602 21-4
6655603 21-4
6655781 1-9
6656009 18-36
6656067 7-29
6656069 7-29
6656070 7-29
6656155 1-12
6656155 7-58
6656413 19-5
6656492 3-10
6656492 3-4
6656492 3-6
6656492 3-9
6656492 5-14
6656492 5-15
6656492 5-17
6657731 22-4
6658256 5-14
6658256 5-15
6658256 5-17
6658264 3-12
6658265 3-12
6658413 3-10
6658413 3-9
6658752 3-10
6658752 3-4
6658752 3-6
6658752 3-9
6658958 6-1
6659288 21-3
6659546 21-4
6659547 21-4
6659548 21-4
6659549 21-4
6659550 21-4
6659551 21-4
6659910 18-18
6659910 18-21
6659910 18-24
6659910 18-26
6659910 18-40
6659910 22-1
6659910 22-3
6659911 10-3
6660071 19-21
6660072 19-20
6660204 10-9
6660351 18-18
6660351 18-21
6660351 18-24
6660351 18-26
6660351 7-56
6660378 21-3
6660391 21-2
6660393 21-2
6660394 21-2
6660396 21-9
6660397 21-9
6660409 21-1
6660492 21-3
6660492 21-4
6660569 22-7
6660573 21-5
6660574 21-5
6660575 21-5
6660576 21-5
6660579 21-4
6660827 3-11
6660827 5-12
6660827 5-13

NUMERIC INDEX

6660827 5-5
6660827 5-7
6660827 5-9
6660863 1-11
6660899 19-19
6660899 19-23
6660899 19-3
6660899 19-41
6660995 1-9
6661111 7-19
6661111 7-22
6661125 19-52
6661126 19-52
6661127 19-52
6661194 12-1
6661222 19-1
6661250 10-2
6661252 10-2
6661253 10-12
6661253 10-15
6661253 10-2
6661254 10-2
6661371 10-1
6661567 8-15
6661632 12-1
6661746 8-15
6661747 8-15
6661785 3-1
6661787 1-9
6661787 3-1
6661800 18-18
6661800 18-21
6661801 8-15
6661803 7-19
6661803 7-22
6661811 8-13
6661838 4-23
6662055 10-2
6662097 3-15
6662294 20-11
6662294 20-9
6662295 20-11
6662295 20-9
6662297 20-11
6662297 20-9
6662437 10-17
6662634 22-10
6662691 3-4
6662691 3-6
6662701 20-11
6662701 20-9
6662702 20-11
6662702 20-9
6662703 20-11
6662703 20-9
6662771 19-52
6662772 19-52
6662773 19-52
6662802 10-3
6662804 3-12
6662807 3-12
6662808 3-12
6662810 3-12
6662811 3-12
6662813 3-12
6662814 3-12
6662815 3-12
6662816 3-12
6662817 3-12
6662818 3-12
6662819 3-12
6662821 3-12
6662831 8-15
6662881 7-64
6662922 20-11
6662922 20-9
6662960 22-10
6662997 1-9
6663955 8-13
6664194 21-1
6664195 21-1
6664223 10-2
6664224 10-2
6664332 7-55
6664353 3-15
6664368 10-1
6664372 10-7
6664407 19-1
6664407 19-2
6664407 19-3
6664438 10-1
6664598 18-17
6664598 18-2
6664598 18-22
6664598 18-23
6664598 18-25
6664598 18-32
6664598 18-7
6664825 22-5
6664973 7-27
6665007 3-3
6665007 3-8
6665477 4-23
6665632 5-10
6665632 5-11
6665654 1-12
6665754 3-12
6665873 19-19
6665873 19-23
6665873 19-41
6666294 21-3
6666300 21-4
6666305 20-11
6666305 20-9
6666544 5-14
6666544 5-15
6666544 5-17
6666553 17-1
6666558 17-1
6666621 10-17
6666622 10-17
6666628 10-17
6666629 10-17
6666630 10-17
6666631 10-17
6666632 10-17
6666633 10-17
6666634 10-17
6666635 10-17
6666636 10-17
6666637 10-17
6666641 3-3
6666641 3-8
6666677 10-2
6666677 10-3
6666844 19-53
6666845 19-53
6666847 19-53
6666848 19-53
6666849 19-53
6667188 19-1
6667327 5-14
6667327 5-15
6667327 5-17
6667717 19-53
6667933 10-2
6667935 3-12
6667999 12-1
6668623 1-11
6668692 10-13
6668810 19-51
6669171 21-9
6669323 4-10
6669323 4-12
6669323 4-13
6669323 4-14
6669323 4-16
6669323 4-18
6669323 4-19
6669323 4-8
6669350 10-17
6669354 10-17
6669359 10-17
6669360 10-17
6669365 10-17
6669372 10-17
6669628 7-52
6669666 8-15
6669671 7-26
6669671 7-34
6669695 4-23
6669696 4-23
6669697 4-23
6669698 4-23
6669699 4-23
6669700 4-23
6669702 4-23

NUMERIC INDEX

6669703 4-23
6669707 4-23
6669712 5-4
6669713 3-13
6669744 3-13
6670119 7-19
6670119 7-22
6670124 19-18
6670124 19-22
6670124 19-41
6670147 7-24
6670147 7-32
6670210 7-53
6670252 22-1
6670252 22-3
6670277 16-1
6670290 16-1
6670312 10-11
6670312 10-3
6670312 10-7
6670543 10-18
6670544 10-18
6670546 10-18
6670548 10-18
6670550 10-18
6670551 10-18
6670628 7-19
6670628 7-22
6670680 19-52
6670682 1-10
6670718 4-23
6670719 4-23
6670720 4-23
6670750 19-16
6670751 7-22
6671116 10-17
6671117 10-17
6671121 10-17
6671122 10-17
6671124 10-17
6671142 21-6
6671620 1-11
6671706 22-12
6671706 8-13
6671973 10-17
6672169 3-12
6672170 3-12
6672267 10-2
6672325 6-1
6672337 3-1
6672457 16-1
6672485 16-1
6672499 10-1
6672502 10-1
6672512 3-15
6672643 5-10
6672643 5-11
6672644 5-10
6672644 5-11
6672645 5-10
6672645 5-11
6672646 5-10
6672646 5-11
6672647 5-10
6672647 5-11
6672648 5-10
6672648 5-11
6672649 5-10
6672649 5-11
6672654 5-10
6672654 5-11
6672655 5-10
6672655 5-11
6672656 5-10
6672656 5-11
6672657 5-10
6672657 5-11
6672658 5-10
6672658 5-11
6672659 5-10
6672659 5-11
6672660 5-10
6672660 5-11
6672661 5-10
6672661 5-11
6672662 5-10
6672662 5-11
6672663 5-10
6672663 5-11
6672664 5-10
6672664 5-11
6672665 5-10
6672665 5-11
6672666 5-10
6672666 5-11
6672668 5-10
6672668 5-11
6672669 5-10
6672669 5-11
6672670 5-10
6672670 5-11
6672671 5-10
6672671 5-11
6672672 5-10
6672672 5-11
6672969 10-16
6672970 10-16
6672971 10-16
6672972 10-16
6672973 10-16
6672974 10-16
6672975 10-16
6672998 3-12
6673303 3-18
6673306 3-18
6673315 10-4
6700024 7-11
6700024 7-47
6700024 7-48
6700722 1-9
6702079 7-35
6703506 1-10
6703507 1-9
6704443 1-9
6704444 1-9
6704820 1-9
6706043 1-9
6709170 5-14
6709170 5-15
6709170 5-17
6715715 7-55
6715715 7-59
6800103 22-7
6800216 7-19
6800216 7-22
6800357 7-24
6800357 7-32
6800367 18-1
6800367 18-28
6800367 18-32
6800367 18-33
6800398 3-10
6800398 3-4
6800398 3-6
6800398 3-9
6800406 10-13
6800407 10-13
6800408 10-13
6800419 8-2
6800429 10-13
6800690 10-4
6800691 10-2
6800710 5-14
6800710 5-15
6800710 5-17
6800713 3-13
6800714 3-13
6800715 3-13
6800716 3-13
6800717 3-13
6800718 7-19
6800718 7-22
6800721 7-19
6800721 7-22
6800749 4-10
6800749 4-12
6800749 4-13
6800749 4-14
6800749 4-16
6800749 4-18
6800749 4-19
6800749 4-8
6800795 1-9
6800800 8-13
6800987 8-15
6800988 8-15
6800989 8-15

NUMERIC INDEX

6800991 8-15
6801007 7-24
6801007 7-32
6801026 22-2
6801026 22-4
6801034 8-15
6801064 3-2
6801065 3-2
6801069 22-5
6801208 3-10
6801208 3-4
6801208 3-6
6801208 3-9
6801239 1-4
6801342 7-26
6801342 7-34
6801473 4-23
6801494 7-11
6801494 7-47
6801494 7-48
6801494 7-50
6801495 7-11
6801495 7-47
6801495 7-48
6801521 4-10
6801521 4-12
6801521 4-13
6801521 4-14
6801521 4-16
6801521 4-18
6801521 4-19
6801521 4-8
6801522 22-10
6801571 4-10
6801571 4-12
6801571 4-13
6801571 4-14
6801571 4-16
6801571 4-18
6801571 4-19
6801571 4-8
6801631 1-9
6801632 4-22
6801663 8-13
6801683 7-26
6801732 10-13
6801738 5-14
6801751 7-24
6801751 7-32
6801752 7-24
6801752 7-32
6801772 19-16
6801779 8-13
6801823 4-10
6801823 4-12
6801823 4-13
6801823 4-14
6801823 4-16
6801823 4-18
6801823 4-19
6801823 4-8
6801824 4-10
6801824 4-12
6801824 4-13
6801824 4-14
6801824 4-16
6801824 4-18
6801824 4-19
6801824 4-8
6801825 4-10
6801825 4-12
6801825 4-13
6801825 4-14
6801825 4-16
6801825 4-18
6801825 4-19
6801825 4-8
6801826 4-10
6801826 4-12
6801826 4-13
6801826 4-14
6801826 4-16
6801826 4-18
6801826 4-19
6801826 4-8
6801829 4-10
6801829 4-12
6801829 4-13
6801829 4-14
6801829 4-16
6801829 4-18
6801829 4-19
6801829 4-8
6801830 6-1
6801843 7-24
6801843 7-26
6801843 7-32
6801843 7-34
6801844 7-25
6801844 7-26
6801844 7-33
6801844 7-34
6801849 4-10
6801849 4-12
6801849 4-13
6801849 4-14
6801849 4-16
6801849 4-18
6801849 4-19
6801849 4-8
6801850 4-10
6801850 4-12
6801850 4-13
6801850 4-14
6801850 4-16
6801850 4-18
6801850 4-19
6801850 4-8
6801931 7-37
6801931 7-40
6801933 7-37
6801933 7-40
6801935 7-26
6801935 7-34
6801936 7-26
6801936 7-34
6801992 19-1
6801994 22-7
6802006 3-3
6802006 3-8
6802016 3-3
6802016 3-8
6802082 14-5
6802195 5-14
6802195 5-15
6802195 5-17
6802196 5-14
6802196 5-15
6802196 5-17
6802201 5-15
6802201 5-17
6802250 18-38
6802302 7-18
6802302 7-21
6802428 19-2
6802429 19-2
6802436 19-1
6802445 10-2
6802446 10-12
6802446 10-15
6802447 10-12
6802447 10-15
6802465 7-25
6802465 7-33
6802466 8-13
6802467 8-13
6802470 14-3
6802477 14-8
6802660 1-4
6802662 1-4
6802711 18-32
6802711 18-33
6802711 18-39
6802711 7-11
6802717 18-22
6802717 18-25
6802717 18-32
6802718 18-17
6802718 18-23
6802718 18-32
6802726 3-10
6802726 3-4
6802726 3-6
6802726 3-9
6802750 3-1
6802789 18-38
6802790 18-38

NUMERIC INDEX

6802800 7-25
6802800 7-33
6802800 7-35
6802806 3-1
6803316 4-23
6803317 4-23
6803540 5-1
6803541 3-10
6803541 3-4
6803541 3-6
6803541 3-9
6803542 13-12
6803542 13-4
6803542 13-8
6803542 13-9
6803572 3-10
6803572 3-4
6803572 3-6
6803572 3-9
6803641 10-3
6803702 4-10
6803702 4-14
6803702 4-16
6803702 4-8
6803703 4-10
6803703 4-14
6803703 4-16
6803703 4-8
6803767 18-9
6803785 8-23
6803787 5-14
6803787 5-15
6803787 5-17
6803788 5-14
6803788 5-15
6803788 5-17
6803869 18-39
6803920 20-3
6803930 5-14
6803931 5-14
6803938 5-15
6803938 5-17
6803939 5-15
6803939 5-17
6804076 18-39
6804083 22-1
6804083 22-3
6804165 14-5
6804303 18-36
6804681 16-1
6804874 10-4
6805178 3-4
6805214 3-6
7000001 7-59
700710188 12-2
700710189 12-2
700716416 1-7
70915794 19-51
71379132 14-3
71389158 14-16
71389158 14-21
71389158 14-5
72162717 7-38
72162717 7-39
72162717 7-41
72162717 7-45
72162717 7-61
72162717 7-62
7774862 13-1
7774862 13-7
AG000767 19-1
AG000767 19-2
AG000769 19-1
AG000772 19-10
AG000772 19-11
AG000772 19-12
AG000772 19-13
AG000772 19-6
AG000772 19-7
AG000772 19-9
AG000829 19-16
AG001344 22-13
AG002288 18-32
AG002288 22-1
AG002288 22-3
AG002358 18-32
AG002358 22-1
AG002358 22-3
AG007463 17-1
AG009548 17-1
AG009647 17-1
AG010220 18-3
AG010220 18-4
AG010220 18-8
AG010359 19-3
AG027273 19-32
AG027273 19-35
AG027273 19-37
AG027273 19-38
AG027274 10-11
AG027274 10-7
AG027274 19-32
AG027274 19-35
AG027274 19-37
AG027274 19-38
AG027275 10-10
AG027275 18-31
AG027275 19-31
AG027275 19-33
AG027275 19-34
AG027275 19-35
AG027275 19-36
AG027275 19-37
AG027275 19-39
AG027275 20-7
AG029090 18-2
AG029090 18-28
AG029090 18-7
AG029161 18-24
AG029161 18-26
AG029295 10-2
AG029298 1-11
AG029298 18-14
AG029298 18-16
AG029298 18-36
AG029298 18-38
AG050100 17-1
AG050255 19-2
AG050268 19-2
AG050274 19-1
AG050606 17-1
AG050689 19-2
AG050692 19-16
AG051059 19-27
AG051059 19-28
AG051059 19-29
AG051059 19-44
AG051059 19-45
AG051059 19-46
AG051125 19-30
AG051125 19-47
AG051127 19-29
AG051127 19-46
AG051128 19-4
AG051137 19-10
AG051137 19-13
AG051137 19-7
AG051141 19-41
AG051142 19-23
AG051142 19-24
AG051142 19-26
AG051142 19-3
AG051142 19-43
AG051151 19-3
AG051157 19-4
AG051158 19-4
AG051159 19-4
AG051161 19-26
AG051161 19-27
AG051161 19-28
AG051161 19-29
AG051161 19-30
AG051161 19-43
AG051161 19-44
AG051161 19-45
AG051161 19-46
AG051161 19-47
AG051162 19-4
AG051165 19-4
AG051174 19-1
AG051177 19-30
AG051177 19-47
AG051182 19-4
AG051182 19-40
AG051183 19-11
AG051183 19-12
AG051183 19-6

NUMERIC INDEX

AG051183 19-9
AG051435 19-30
AG051435 19-47
AG051436 19-27
AG051436 19-28
AG051436 19-29
AG051436 19-44
AG051436 19-45
AG051436 19-46
AG051437 19-4
AG051535 19-26
AG051535 19-27
AG051535 19-28
AG051535 19-29
AG051535 19-30
AG051535 19-43
AG051535 19-44
AG051535 19-45
AG051535 19-46
AG051535 19-47
AG051716 17-1
AG051926 19-1
AG052116 19-4
AG052342 19-4
AG052373 19-4
AG053041 19-2
AG053056 19-4
AG054107 17-1
AG055191 22-13
AG056287 19-10
AG056287 19-13
AG056287 19-7
AG056289 20-12
AG056289 20-13
AG056785 19-10
AG056785 19-11
AG056785 19-12
AG056785 19-13
AG056785 19-6
AG056785 19-7
AG056785 19-9
AG056785 20-12
AG056785 20-13
AG057102 17-1
AG057325 17-1
AG058307 17-1
AG061235 7-38
AG061235 7-39
AG061235 7-4
AG061235 7-41
AG061235 7-45
AG061235 7-61
AG061235 7-62
AG061236 7-4
AG109953 18-31
AG120735 18-9
AG121483 7-64
AG121484 7-64
AG121485 7-64
AG121551 1-6
AG121582 7-16
AG121591 7-16
AG121749 10-11
AG121750 10-5
AG121768 7-17
AG121778 7-16
AG121806 7-16
AG121830 7-15
AG122433 7-38
AG122433 7-39
AG122433 7-41
AG122433 7-45
AG122433 7-61
AG122433 7-62
AG122510 19-40
AG122578 19-52
AG122764 7-15
AG122800 3-3
AG122800 3-8
AG122830 7-24
AG122830 7-32
AG122830 7-35
AG123761 10-13
AG124723 7-16
AG124732 7-16
AG125370 18-9
AG128112 7-30
AG128112 8-3
AG128842 18-5
AG128843 18-5
AG129187 1-1
AG129187 1-3
AG129187 19-11
AG129187 19-12
AG129187 19-16
AG129187 19-26
AG129187 19-27
AG129187 19-28
AG129187 19-29
AG129187 19-30
AG129187 19-4
AG129187 19-40
AG129187 19-43
AG129187 19-44
AG129187 19-45
AG129187 19-46
AG129187 19-47
AG129187 19-6
AG129187 19-9
AG129192 18-4
AG129193 18-4
AG129360 8-13
AG133611 20-7
AG133612 15-1
AG133612 20-7
AG133620 18-9
AG133622 7-5
AG133624 7-9
AG133625 18-9
AG133626 7-44
AG133801 18-9
AG133805 18-9
AG134266 7-12
AG134272 7-12
AG134283 7-47
AG134283 7-48
AG134283 7-50
AG134293 7-24
AG134293 7-32
AG134340 18-9
AG134517 7-24
AG134517 7-32
AG134519 7-24
AG134519 7-32
AG134520 7-26
AG134520 7-34
AG135991 14-12
AG135991 14-17
AG135991 14-6
AG136186 18-7
AG136400 7-16
AG136745 19-48
AG136745 19-50
AG136748 19-32
AG136748 19-35
AG136748 19-37
AG136748 19-38
AG136752 19-25
AG136753 19-25
AG136754 19-25
AG136755 19-25
AG136756 19-25
AG136757 19-33
AG138398 7-4
AG200573 18-15
AG213064 10-6
AG220601 7-44
AG231204 18-27
AG231204 18-29
AG231204 19-31
AG231204 19-32
AG231204 19-34
AG231204 19-35
AG231204 19-36
AG232541 7-17
AG234213 7-9
AG234375 19-33
AG235784 7-9
AG235991 18-2
AG235991 18-8
AG260029 7-44
AG260590 18-4
AG263020 7-17
AG330427 8-1
AG330428 8-1
AG330430 19-49
AG330709 17-1

NUMERIC INDEX

AG330710	17-1
AG330711	17-1
AG330712	17-1
AG330713	17-1
AG330714	17-1
AG330879	19-8
AG331177	1-5
AG331380	10-18
AG331381	10-18
AG332445	8-4
AG332447	8-5
AG332448	8-5
AG332449	8-4
AG332450	8-5
AG332451	8-5
AG332452	8-4
AG332453	8-5
AG332454	8-5
AG332456	8-5
AG332457	8-4
AG420779	11-1
AG420779	11-2
AG420939	10-6
AG420940	10-6
AG421135	10-6
AG421136	10-6
AG424374	7-3
AG510939	1-1
AG510947	6-1
AG511099	18-14
AG511099	18-16
AG511099	18-2
AG511099	18-4
AG511099	18-7
AG511099	1-9
AG511528	19-25
AG511528	19-42
AG511722	19-1
AG511722	19-2
AG512346	18-29
AG512346	18-4
AG512885	1-12
AG512885	1-9
AG512885	3-10
AG512885	3-4
AG512885	3-6
AG512885	3-9
AG513385	1-1
AG513385	19-25
AG513385	19-3
AG513385	19-42
AG513393	18-21
AG513393	18-25
AG513466	19-1
AG513653	1-3
AG513654	10-1
AG513654	7-24
AG513654	7-32
AG513724	19-3
AG513916	1-12
AG513916	7-16
AG514288	21-1
AG514288	21-2
AG514288	21-3
AG514385	1-1
AG514559	21-2
AG514559	21-3
AG514777	1-4
AG514800	7-54
AG514803	7-26
AG514803	7-34
AG515121	10-8
AG515121	18-31
AG515121	19-31
AG515121	19-33
AG515121	19-34
AG515121	19-35
AG515121	19-36
AG515121	19-37
AG515121	19-39
AG515121	20-9
AG515121	8-15
AG515122	10-8
AG515122	11-3
AG515122	11-4
AG515180	18-18
AG515180	18-2
AG515180	18-21
AG515180	18-24
AG515180	18-26
AG515180	18-38
AG515180	18-7
AG515180	4-23
AG515203	11-1
AG515203	11-2
AG515760	10-18
AG515761	10-18
AG515762	10-18
AG515762	19-5
AG515764	10-18
AG515765	10-18
AG515765	19-5
AG515766	10-18
AG515782	1-9
AG515782	3-10
AG515782	3-4
AG515782	3-6
AG515782	3-9
AG515850	10-18
AG515851	10-18
AG515892	3-19
AG515917	19-5
AG515919	10-18
AG515927	20-8
AG515928	20-8
AG515983	1-12
AG515983	1-13
AG516064	18-4
AG516064	3-16
AG516403	18-29
AG516403	19-31
AG516403	19-32
AG516403	19-33
AG516403	19-34
AG516403	19-35
AG516403	19-36
AG516403	19-37
AG516403	19-38
AG516403	19-39
AG516405	19-27
AG516405	19-28
AG516405	19-44
AG516405	19-45
AG516567	10-8
AG516568	10-8
AG516795	1-6
AG516864	10-9
AG517158	12-2
AG517292	19-12
AG517438	8-15
AG517466	10-18
AG517467	10-18
AG517568	5-14
AG517568	5-17
AG517591	20-2
AG517591	20-6
AG517594	20-2
AG517594	20-6
AG517597	20-2
AG517597	20-6
AG517766	13-10
AG517766	13-11
AG517766	13-14
AG517766	13-2
AG517766	13-3
AG517766	13-5
AG517766	13-6
AG517975	10-11
AG517975	10-7
AG518038	11-1
AG518038	11-2
AG518096	8-15
AG518304	22-2
AG518326	19-31
AG518326	19-33
AG518326	19-34
AG518326	19-36
AG518326	19-39
AG518500	18-2
AG518500	18-3
AG518500	18-7
AG518500	18-8
AG518673	10-5
AG518674	10-5
AG518676	10-5
AG518933	7-24
AG518933	7-32

NUMERIC INDEX

AG519114 7-30
AG519114 7-53
AG519115 7-18
AG519115 7-21
AG519123 7-30
AG519123 7-46
AG519123 7-49
AG519123 7-6
AG519123 8-3
AG519210 11-2
AG519211 11-1
AG519436 10-5
AG519570 7-16
AG519741 1-6
AG519749 19-35
AG519751 19-33
AG519751 19-35
AG519861 19-1
AG519871 1-6
AG520264 20-2
AG520264 20-6
AG520285 7-54
AG520617 7-16
AG520679 1-6
AG520742 22-9
AG520866 22-1
AG520866 22-2
AG520866 22-3
AG520875 10-11
AG520880 10-10
AG520885 18-17
AG520885 18-18
AG520885 18-21
AG520885 18-23
AG520885 18-24
AG520885 18-25
AG520885 18-26
AG520885 18-40
AG520885 7-56
AG520967 1-1
AG520967 1-12
AG520967 1-3
AG521170 10-6
AG521351 1-1
AG521798 7-26
AG521798 7-34
AG521933 10-10
AG522218 12-1
AG522242 22-9
AG522243 22-9
AG522562 10-6
AG522718 18-39
AG522907 20-7
AG523069 22-2
AG523227 7-30
AG523259 19-2
AG523877 10-6
AG524540 6-1
AG550116 18-15
AG550116 18-17
AG550116 18-2
AG550116 18-21
AG550116 18-23
AG550116 18-25
AG550116 18-32
AG550116 18-4
AG550116 18-7
AG550124 18-17
AG550124 18-2
AG550124 18-21
AG550124 18-23
AG550124 18-25
AG550124 18-32
AG550124 18-4
AG550124 18-7
AG550124 20-11
AG550124 20-9
AG550124 3-4
AG550124 3-6
AG550175 10-6
AG550175 18-23
AG550175 18-25
AG550175 3-11
AG550175 5-13
AG550183 18-24
AG550183 18-26
AG550183 22-10
AG550183 7-11
AG550183 7-16
AG550183 7-19
AG550183 7-22
AG550183 7-24
AG550183 7-26
AG550183 7-32
AG550183 7-34
AG550183 7-47
AG550183 7-5
AG550183 7-50
AG550183 7-54
AG550183 8-3
AG550191 21-2
AG550191 21-3
AG550191 3-10
AG550191 3-4
AG550191 3-6
AG550191 3-9
AG550191 4-23
AG550191 6-1
AG550191 7-24
AG550191 7-32
AG550205 21-1
AG550205 7-11
AG550205 7-18
AG550205 7-19
AG550205 7-21
AG550205 7-22
AG550205 7-24
AG550205 7-26
AG550205 7-32
AG550205 7-34
AG550205 7-35
AG550205 7-37
AG550205 7-40
AG550205 7-47
AG550205 7-5
AG550205 7-50
AG550205 7-54
AG550205 7-56
AG550205 8-3
AG550213 12-1
AG550213 18-18
AG550213 18-21
AG550213 21-1
AG550213 4-10
AG550213 4-12
AG550213 4-13
AG550213 4-14
AG550213 4-16
AG550213 4-18
AG550213 4-19
AG550213 4-23
AG550213 4-8
AG550213 7-18
AG550213 7-21
AG550213 7-56
AG550248 18-2
AG550248 18-28
AG550248 18-7
AG550264 18-4
AG550264 20-11
AG550264 20-9
AG550264 21-2
AG550264 3-4
AG550264 3-6
AG550280 18-16
AG550280 18-36
AG550280 4-1
AG550280 4-2
AG550280 4-20
AG550280 4-21
AG550280 4-3
AG550280 4-4
AG550280 4-5
AG550280 7-36
AG550280 7-45
AG550280 7-60
AG550280 7-61
AG550280 7-7
AG550310 18-38
AG550353 18-31
AG550353 18-4
AG550353 21-2
AG550353 7-15
AG550450 22-1
AG550450 3-1
AG550450 3-12
AG550450 5-4

NUMERIC INDEX

AG550469 18-17
AG550469 18-21
AG550469 18-23
AG550469 18-25
AG550469 18-32
AG550477 18-17
AG550477 18-21
AG550477 18-23
AG550477 18-25
AG550477 18-32
AG550477 18-33
AG550477 22-1
AG550477 22-3
AG550485 10-11
AG550485 10-6
AG550485 10-7
AG550485 10-9
AG550485 18-3
AG550485 18-8
AG550485 21-3
AG550493 10-1
AG550493 10-11
AG550493 10-6
AG550493 10-7
AG550493 10-9
AG550493 19-11
AG550493 19-12
AG550493 19-6
AG550493 19-9
AG550493 20-11
AG550493 21-1
AG550493 21-9
AG550493 7-11
AG550493 7-24
AG550493 7-26
AG550493 7-32
AG550493 7-34
AG550493 7-47
AG550493 7-8
AG550507 10-5
AG550507 10-6
AG550507 18-11
AG550507 18-3
AG550507 18-4
AG550507 18-8
AG550507 19-11
AG550507 19-12
AG550507 19-6
AG550507 19-9
AG550507 22-10
AG550515 21-3
AG550558 10-9
AG550558 21-2
AG550566 21-2
AG550566 8-14
AG550612 10-11
AG550612 10-6
AG550612 10-7
AG550612 10-9
AG550612 19-11
AG550612 19-12
AG550612 19-6
AG550612 19-9
AG550612 20-11
AG550612 21-3
AG550612 21-9
AG550612 7-11
AG550655 18-27
AG550655 18-33
AG550655 18-40
AG550655 21-2
AG550671 10-10
AG550671 20-11
AG550671 21-1
AG550671 21-9
AG550698 10-7
AG550698 18-11
AG550698 18-4
AG550698 7-27
AG550779 18-18
AG550779 18-21
AG550779 18-24
AG550779 18-26
AG550787 18-3
AG550787 18-8
AG550817 10-10
AG550817 1-4
AG550825 1-9
AG550825 19-3
AG550825 21-2
AG550825 21-3
AG550825 3-10
AG550825 3-4
AG550825 3-6
AG550825 3-9
AG550825 4-23
AG550833 7-16
AG550906 18-11
AG550906 18-34
AG550906 7-26
AG550906 7-34
AG550949 18-6
AG550981 10-9
AG550981 18-18
AG550981 18-21
AG550981 18-24
AG550981 18-26
AG551007 10-6
AG551007 18-18
AG551007 18-21
AG551007 18-23
AG551007 18-24
AG551007 18-25
AG551007 18-26
AG551007 18-38
AG551007 18-4
AG551007 19-12
AG551007 4-23
AG551015 10-5
AG551015 10-6
AG551015 11-5
AG551015 11-7
AG551015 18-17
AG551015 18-18
AG551015 18-21
AG551015 18-23
AG551015 18-25
AG551015 18-27
AG551015 21-1
AG551015 22-2
AG551015 22-4
AG551015 4-23
AG551015 7-26
AG551015 7-34
AG551031 18-17
AG551031 18-21
AG551031 18-23
AG551031 18-25
AG551031 18-32
AG551112 7-55
AG551224 4-23
AG551252 10-6
AG551252 10-8
AG551279 21-3
AG551279 7-24
AG551279 7-32
AG551279 7-47
AG551279 7-8
AG551392 1-9
AG551406 21-2
AG551457 4-23
AG551503 18-4
AG551503 19-52
AG551503 20-3
AG551503 6-1
AG551503 7-24
AG551503 7-32
AG551856 18-32
AG551856 18-33
AG551856 18-39
AG551937 5-14
AG551937 5-15
AG551937 5-17
AG551937 5-4
AG552046 18-33
AG552062 22-1
AG552062 22-3
AG552089 7-19
AG552089 7-22
AG552127 1-9
AG552186 7-16
AG552194 7-24
AG552194 7-32
AG552194 7-52
AG552240 22-1
AG552240 22-3
AG552240 22-4

NUMERIC INDEX

AG552275 7-18
AG552275 7-21
AG552275 7-56
AG552321 4-23
AG552410 3-1
AG553069 18-18
AG553069 18-21
AG553069 18-24
AG553069 18-26
AG553158 1-3
AG553166 5-2
AG553166 5-3
AG553166 5-6
AG553166 5-8
AG553212 18-32
AG553212 18-33
AG553212 7-11
AG553514 7-35
AG553557 18-30
AG553557 18-31
AG553557 20-1
AG553557 20-11
AG553557 20-3
AG553557 20-5
AG553557 20-7
AG553557 20-9
AG553557 4-10
AG553557 4-14
AG553557 4-16
AG553557 4-8
AG553557 7-57
AG553662 19-16
AG553662 7-19
AG553662 7-22
AG553689 18-14
AG553689 18-15
AG553689 18-39
AG553751 18-14
AG553867 1-12
AG553867 1-13
AG553891 7-55
AG553972 3-11
AG553972 5-12
AG553972 5-13
AG553972 5-5
AG553972 5-7
AG553972 5-9
AG554294 18-11
AG555118 18-1
AG555118 18-28
AG555819 18-18
AG555819 18-21
AG555819 18-26
AG555819 21-2
AG555819 22-2
AG555819 22-4
AG556103 1-9
AG556149 18-4
AG557307 7-16
AG557668 18-24
AG557668 18-26
AG557668 7-26
AG557668 7-34
AG557676 8-15
AG557692 18-14
AG558648 1-12
AG558788 10-11
AG558788 10-5
AG558788 7-11
AG558788 7-24
AG558788 7-26
AG558788 7-32
AG558788 7-34
AG559083 18-16
AG559083 22-2
AG559083 22-3
AG559083 22-4
AG559083 4-20
AG559083 4-21
AG559083 7-45
AG559083 7-61
AG559083 7-7
AG559105 7-35
AG559148 7-53
AG559199 18-17
AG559199 18-21
AG559199 18-23
AG559199 18-25
AG559199 18-32
AG559202 4-23
AG559415 1-1
AG559768 5-14
AG559768 5-15
AG559768 5-17
AG559768 8-2
AG559911 7-56
AG560480 10-7
AG560480 19-23
AG560502 18-34
AG560634 18-1
AG560634 18-28
AG560634 18-3
AG560634 18-8
AG560693 3-13
AG560693 7-13
AG560693 7-24
AG560693 7-32
AG560693 7-35
AG560693 7-46
AG560693 7-49
AG560693 7-54
AG560693 7-56
AG560693 7-59
AG560693 7-6
AG560693 8-3
AG560897 18-3
AG560897 18-8
AG561025 1-1
AG561025 19-1
AG561025 19-2
AG561025 6-1
AG561067 8-15
AG561072 18-11
AG561081 3-10
AG561081 3-4
AG561081 3-6
AG561081 3-9
AG561081 7-16
AG561156 18-3
AG561156 18-8
AG561197 18-1
AG561197 18-28
AG561213 19-25
AG561213 19-42
AG561213 7-24
AG561213 7-32
AG561229 1-1
AG561229 19-19
AG561229 19-23
AG561229 19-24
AG561229 19-25
AG561229 19-3
AG561229 19-41
AG561229 19-42
AG561229 22-13
AG561230 7-24
AG561230 7-32
AG561231 19-1
AG561233 1-3
AG561237 1-6
AG561251 18-24
AG561251 18-26
AG561251 7-26
AG561251 7-34
AG561305 18-14
AG561308 7-27
AG561310 3-13
AG561340 7-16
AG561366 19-1
AG561366 6-1
AG561384 7-11
AG561384 7-37
AG561384 7-40
AG561391 7-53
AG561391 8-3
AG561617 10-10
AG561617 1-4
AG561617 18-11
AG561617 8-14
AG561629 7-24
AG561629 7-27
AG561629 7-32
AG561629 7-37
AG561629 7-40
AG561629 7-55
AG561679 10-4
AG561679 1-3

NUMERIC INDEX

AG561679 20-11
AG561679 20-9
AG561679 8-10
AG561679 8-14
AG561683 10-2
AG561683 10-3
AG561683 10-7
AG561683 10-9
AG561683 18-16
AG561683 18-36
AG561683 19-1
AG561683 19-3
AG561683 22-2
AG561683 22-4
AG561683 3-2
AG561683 4-3
AG561683 4-4
AG561683 4-5
AG561683 5-12
AG561683 5-5
AG561683 5-7
AG561683 5-9
AG561683 6-1
AG561683 7-19
AG561683 7-22
AG561683 7-37
AG561683 7-40
AG561683 7-57
AG561683 8-23
AG561753 10-10
AG561770 18-11
AG561770 7-11
AG561770 8-15
AG561793 10-6
AG561793 19-1
AG561793 19-3
AG561797 7-46
AG561797 7-49
AG561797 7-6
AG561808 18-34
AG561809 18-31
AG561822 18-2
AG561822 18-7
AG561825 18-2
AG561825 18-7
AG561834 7-24
AG561834 7-26
AG561834 7-32
AG561834 7-34
AG561838 18-1
AG561838 18-14
AG561838 18-28
AG561879 7-16
AG561884 8-15
AG561892 18-11
AG561892 18-14
AG561892 18-15
AG561892 18-16
AG561892 18-18
AG561892 18-21
AG561892 18-24
AG561892 18-26
AG561892 18-34
AG561892 18-38
AG561892 18-4
AG561892 18-41
AG561892 18-8
AG561892 4-10
AG561892 4-12
AG561892 4-13
AG561892 4-14
AG561892 4-16
AG561892 4-18
AG561892 4-19
AG561892 4-23
AG561892 4-8
AG561892 5-14
AG561892 5-15
AG561892 5-17
AG561892 7-2
AG561895 6-1
AG562015 7-8
AG562047 19-10
AG562047 19-13
AG562047 19-7
AG562051 10-6
AG562051 19-3
AG562054 20-9
AG562061 10-11
AG562064 18-31
AG562064 19-33
AG562064 19-35
AG562064 19-37
AG562064 20-7
AG562074 18-29
AG562074 19-3
AG562074 19-31
AG562074 19-32
AG562074 19-33
AG562074 19-34
AG562074 19-35
AG562074 19-36
AG562074 19-37
AG562074 19-38
AG562074 19-39
AG562081 10-11
AG562082 10-11
AG562082 10-7
AG562082 19-32
AG562082 19-35
AG562082 19-37
AG562082 19-38
AG562090 10-6
AG562103 10-11
AG562171 8-15
AG562204 7-27
AG562204 7-52
AG562229 7-26
AG562229 7-34
AG562237 10-11
AG562237 19-1
AG562237 19-2
AG562237 19-3
AG562237 3-2
AG562237 6-1
AG562271 10-2
AG562271 12-1
AG562272 1-11
AG562272 22-2
AG562272 4-10
AG562272 4-12
AG562272 4-13
AG562272 4-14
AG562272 4-16
AG562272 4-18
AG562272 4-19
AG562272 4-8
AG562327 10-10
AG562327 11-3
AG562327 11-4
AG562327 22-1
AG562327 22-2
AG562327 22-3
AG562346 7-18
AG562346 7-21
AG562346 7-24
AG562346 7-26
AG562346 7-32
AG562346 7-34
AG562354 7-3
AG562372 7-16
AG562372 7-24
AG562372 7-32
AG562372 7-54
AG562375 1-11
AG562375 4-10
AG562375 4-12
AG562375 4-13
AG562375 4-14
AG562375 4-16
AG562375 4-18
AG562375 4-19
AG562375 4-8
AG562393 7-16
AG562401 7-1
AG562401 7-49
AG562463 1-6
AG562463 19-1
AG562463 19-2
AG562463 7-18
AG562463 7-19
AG562463 7-21
AG562463 7-22
AG562463 8-10
AG562463 8-23
AG562463 8-7
AG562496 10-2

NUMERIC INDEX

AG562496 10-3
AG562496 10-6
AG562496 10-7
AG562496 10-9
AG562496 1-1
AG562496 18-21
AG562496 18-25
AG562496 18-28
AG562496 18-33
AG562496 19-19
AG562496 19-23
AG562496 19-24
AG562496 20-11
AG562496 20-9
AG562496 21-1
AG562496 6-1
AG562496 7-24
AG562496 7-32
AG562496 7-37
AG562496 7-40
AG562537 18-15
AG562551 18-16
AG562551 18-36
AG562551 4-1
AG562551 4-2
AG562568 7-16
AG562584 18-14
AG562629 5-14
AG562629 5-15
AG562629 5-17
AG562629 5-5
AG562639 10-3
AG562639 7-24
AG562639 7-32
AG562676 10-5
AG562709 7-52
AG562792 7-24
AG562792 7-32
AG562793 10-8
AG562793 11-3
AG562793 11-4
AG562797 22-2
AG562817 3-1
AG562821 19-34
AG562821 19-36
AG562821 19-37
AG562938 20-1
AG562938 20-5
AG563061 19-31
AG563061 19-33
AG563061 19-34
AG563061 19-36
AG563061 19-39
AG563099 10-10
AG563174 10-5
AG600857 1-6
AG601152 18-11
AG601152 18-27
AG601152 18-31
AG601152 18-34
AG601152 18-4
AG601152 7-15
AG601217 18-1
AG601217 18-2
AG601217 18-28
AG601217 18-7
AG601411 18-11
AG601411 18-14
AG601411 18-18
AG601411 18-21
AG601411 18-24
AG601411 18-26
AG601411 18-3
AG601411 18-35
AG601411 18-38
AG601411 18-8
AG601411 19-11
AG601411 19-12
AG601411 19-6
AG601411 19-9
AG601411 20-3
AG601411 3-2
AG601888 10-6
AG601888 10-8
AG601888 18-11
AG601888 18-27
AG601888 18-34
AG602310 3-19
AG602523 1-6
AG603678 19-1
AG603864 18-1
AG603864 18-14
AG603864 18-15
AG603864 18-2
AG603864 18-28
AG603864 18-3
AG603864 18-39
AG603864 18-7
AG603864 18-8
AG604184 18-11
AG604185 18-11
AG604185 18-3
AG604185 18-4
AG604185 18-8
AG604216 1-4
AG604216 18-11
AG604216 18-3
AG604216 18-4
AG604216 18-6
AG604216 18-8
AG604216 8-15
AG606258 18-39
AG606259 18-2
AG606259 18-28
AG606259 18-7
AG609465 7-64
AG609486 11-1
AG609486 11-2
AG609614 10-1
AG609615 10-1
AG609777 19-31
AG609777 19-33
AG609777 19-34
AG609777 19-36
AG609777 19-39
AG610787 15-1
AG610787 20-7
AG610787 20-8
AG610788 15-1
AG610788 20-8
AG610792 15-1
AG704467 8-15
AG704757 7-36
AG704757 7-51
AG708307 7-13
AG708307 7-47
AG708307 7-50
AG708307 7-56
AG711022 3-10
AG711022 3-4
AG711022 3-6
AG711022 3-9
AG711273 4-1
AG711273 4-2
AG711273 4-6
AG711273 4-7
AG711448 11-3
AG711448 11-4
AG711680 1-12
AG711680 1-13
AG712150 7-64
AG712925 7-10
AG713265 7-16
AG713398 10-6
AG713398 12-2
AG714828 11-3
AG714828 11-4
AG714942 7-4
AG715207 7-64
AG715736 10-18
AG715737 10-18
AG715738 10-18
AG715740 10-18
AG715748 10-18
AG715749 10-18
AG716811 7-64
AG719528 11-3
AG719528 11-4
AG721301 8-1
AG722408 8-1
AG722409 8-1
AG726854 7-63
AG726854 7-64
AG727123 7-4
AG727124 7-4
AG727125 7-4
AG727126 7-4

NUMERIC INDEX

AG834159 11-3
AG834159 11-4
CH103-2529 6-1
CH185-1512 6-1
CH8T-4132 22-8
CH8T-4205 22-7
CH8T-6703 1-6
L609465 7-14
NS 7-29
NS 7-36
NS 7-38
NS 7-39
NS 7-41
NS 7-45
NS 7-51
NS 7-61
NS 7-62
WR10152 21-2
WR10193 3-1
WR10193 3-10
WR10193 3-12
WR10193 3-3
WR10193 3-4
WR10193 3-6
WR10193 3-8
WR10193 3-9
WR10193 4-23
WR10254 7-27
WR10337 8-2
WR10339 18-17
WR10339 18-18
WR10339 18-21
WR10339 18-23
WR10339 18-24
WR10339 18-25
WR10339 18-26
WR10339 18-32
WR10416 16-1
WR10436 20-7
WR10852 22-13
WR10854 21-1
WR10856 21-1
WR10857 1-3
WR10857 19-1
WR10857 19-2
WR10859 1-6
WR10861 1-6
WR10896 18-17
WR10896 18-21
WR10896 18-23
WR10896 18-25
WR10896 18-32
WR11514 10-7
WR11522 3-10
WR11522 3-4
WR11522 3-6
WR11522 3-9
WR11536 5-14
WR11536 5-15
WR11536 5-17
WR11536 5-4
WR11543 18-11
WR11543 18-17
WR11543 18-21
WR11543 18-23
WR11543 18-25
WR11543 18-34
WR11546 18-32
WR11559 18-34
WR11853 10-2
WR120510 5-14
WR120510 5-15
WR120510 5-17
WR120567 18-24
WR120567 18-26
WR120657 3-10
WR120657 3-4
WR120657 3-7
WR120657 3-9
WR120749 8-13
WR120882 1-9
WR121071 3-16
WR121502 1-1
WR121510 1-6
WR121514 1-6
WR121622 18-39
WR121636 3-8
WR121637 3-3
WR121658 3-10
WR121658 3-4
WR121658 3-6
WR121658 3-9
WR121659 3-10
WR121659 3-4
WR121659 3-6
WR121659 3-9
WR121660 3-10
WR121660 3-4
WR121660 3-6
WR121660 3-9
WR121664 3-10
WR121664 3-4
WR121664 3-6
WR121664 3-9
WR121665 3-10
WR121665 3-4
WR121665 3-6
WR121665 3-9
WR121667 3-10
WR121667 3-4
WR121667 3-6
WR121667 3-9
WR121668 3-10
WR121668 3-4
WR121668 3-6
WR121668 3-9
WR121669 3-9
WR121671 3-10
WR121880 1-6
WR121947 20-11
WR121947 20-9
WR122322 18-18
WR122322 18-21
WR122322 18-24
WR122322 18-26
WR122403 7-37
WR122407 7-40
WR122408 7-40
WR122414 7-37
WR122415 7-11
WR122415 7-47
WR122423 7-35
WR122424 7-26
WR122432 7-36
WR122432 7-51
WR122553 18-2
WR122553 18-23
WR122553 18-25
WR122553 18-32
WR122553 18-7
WR122572 3-10
WR122572 3-4
WR122572 3-6
WR122572 3-9
WR122586 19-52
WR122590 19-52
WR122642 7-46
WR122642 7-49
WR122642 7-6
WR122643 7-54
WR122985 7-24
WR122985 7-32
WR122985 7-35
WR123121 7-30
WR124049 1-1
WR124126 1-6
WR124127 1-6
WR124224 1-6
WR124362 18-4
WR124381 1-6
WR124408 18-4
WR124422 18-4
WR124425 18-2
WR124425 18-7
WR124426 18-3
WR124426 18-8
WR124427 18-3
WR124427 18-8
WR124500 18-4
WR124539 18-4
WR124563 1-3
WR124776 7-9
WR124890 5-2
WR124890 5-3
WR124890 5-6
WR124890 5-8
WR124891 5-2

NUMERIC INDEX

WR124891	5-3
WR124891	5-6
WR124891	5-8
WR124892	5-2
WR124892	5-3
WR124893	5-8
WR124894	5-6
WR124898	5-2
WR124898	5-3
WR124898	5-6
WR124898	5-8
WR124932	7-7
WR124934	1-1
WR124984	1-12
WR125097	18-12
WR125301	18-5
WR125304	18-5
WR125305	18-6
WR125306	18-4
WR125307	18-2
WR125307	18-7
WR125308	18-1
WR125309	18-1
WR125310	18-5
WR125311	18-2
WR125311	18-7
WR125351	1-3
WR125352	1-3
WR125353	1-3
WR125354	1-3
WR125372	7-37
WR125372	7-40
WR125404	1-2
WR125408	1-3
WR125615	18-4
WR125694	5-14
WR125694	5-15
WR125694	5-17
WR126431	10-9
WR126432	10-9
WR126463	10-9
WR126478	10-13
WR126479	10-13
WR126491	18-11
WR126491	18-4
WR126504	18-16
WR126509	10-9
WR126532	10-9
WR126834	3-1
WR126892	10-5
WR126985	3-2
WR127063	18-31
WR127069	18-31
WR127102	18-27
WR127270	18-27
WR127271	22-12
WR127272	22-12
WR127572	22-11
WR127572	22-12
WR127615	3-2
WR127886	7-1
WR127887	18-15
WR127899	18-14
WR127961	18-14
WR127963	18-15
WR127966	18-15
WR127997	18-14
WR127998	18-14
WR127999	18-14
WR128010	18-2
WR128010	18-7
WR128061	7-2
WR128212	18-11
WR128405	7-64
WR128544	18-2
WR128544	18-7
WR128547	1-1
WR128650	10-6
WR128669	7-24
WR128669	7-32
WR128732	18-13
WR128733	18-9
WR128734	18-9
WR128811	18-14
WR128835	18-3
WR128835	18-8
WR128841	1-1
WR128871	7-9
WR128882	19-1
WR129144	19-37
WR129144	19-38
WR129144	19-39
WR129177	7-9
WR129194	18-5
WR129195	18-2
WR129195	18-7
WR129197	10-3
WR129279	5-2
WR129279	5-3
WR129279	5-6
WR129279	5-8
WR129280	5-2
WR129280	5-3
WR129280	5-6
WR129280	5-8
WR129281	5-2
WR129281	5-3
WR129281	5-6
WR129281	5-8
WR129348	10-2
WR129349	10-2
WR129357	8-13
WR129359	10-5
WR129361	10-3
WR129367	7-8
WR129417	1-4
WR129418	1-4
WR129419	1-4
WR129420	10-3
WR129435	1-4
WR129450	7-11
WR129450	7-47
WR129453	10-5
WR129453	8-7
WR129454	19-1
WR129481	1-11
WR129482	1-11
WR129484	10-10
WR129496	18-27
WR129501	18-27
WR129502	18-16
WR129504	10-10
WR129514	10-1
WR129520	4-10
WR129520	4-12
WR129520	4-13
WR129520	4-8
WR129521	4-10
WR129521	4-12
WR129521	4-13
WR129521	4-14
WR129521	4-16
WR129521	4-18
WR129521	4-19
WR129521	4-8
WR129523	22-6
WR129524	22-5
WR129571	7-57
WR129592	3-2
WR129593	2-1
WR129596	8-23
WR129597	10-18
WR129609	2-2
WR129610	2-2
WR129611	1-9
WR129616	2-2
WR129616	22-12
WR129617	2-2
WR129618	2-2
WR129621	2-2
WR129622	2-2
WR129623	2-2
WR129624	2-2
WR129626	2-2
WR129627	3-2
WR129628	2-1
WR129628	3-1
WR129629	3-1
WR129630	2-1
WR129630	3-2
WR129631	2-1
WR129631	3-2
WR129639	2-2
WR129706	18-5
WR129728	4-10
WR129728	4-12
WR129728	4-13

NUMERIC INDEX

WR129728 4-14
WR129728 4-16
WR129728 4-18
WR129728 4-19
WR129728 4-8
WR129737 7-24
WR129737 7-26
WR129737 7-32
WR129737 7-34
WR129749 3-1
WR129750 3-1
WR129751 7-24
WR129751 7-26
WR129751 7-32
WR129751 7-34
WR129752 7-24
WR129752 7-26
WR129752 7-32
WR129752 7-34
WR129753 7-24
WR129753 7-26
WR129753 7-32
WR129753 7-34
WR129754 7-42
WR129756 18-1
WR129757 18-1
WR129759 3-1
WR129762 3-1
WR129762 6-1
WR129763 3-1
WR129768 3-1
WR129776 1-9
WR129803 10-10
WR129803 10-11
WR129803 10-7
WR129803 10-9
WR129804 10-11
WR129807 10-2
WR129815 22-9
WR129816 22-9
WR129817 22-9
WR129818 22-9
WR129819 1-12
WR129819 1-13
WR129840 19-1
WR129893 7-43
WR129894 7-43
WR129895 7-57
WR129898 7-57
WR129977 14-5
WR129978 14-2
WR130544 18-4
WR130554 18-16
WR13089 5-14
WR13089 5-15
WR13089 5-17
WR131024 7-57
WR131085 7-57
WR131092 7-57
WR131093 7-57
WR131429 8-13
WR131555 7-10
WR131555 7-36
WR131555 7-38
WR131555 7-39
WR131555 7-41
WR131555 7-51
WR131555 7-61
WR131555 7-62
WR131555 7-7
WR131556 7-38
WR131556 7-39
WR131558 7-45
WR131571 7-38
WR131571 7-39
WR131573 7-41
WR131573 7-62
WR131576 7-45
WR131580 7-61
WR131587 7-36
WR131588 7-51
WR131604 7-36
WR131604 7-51
WR131617 7-38
WR131617 7-39
WR131617 7-41
WR131617 7-61
WR131617 7-62
WR131620 7-45
WR131625 7-10
WR131625 7-36
WR131625 7-51
WR131645 7-7
WR131646 7-7
WR131647 7-7
WR131649 7-2
WR131650 7-2
WR131651 7-2
WR131652 7-2
WR131665 10-3
WR132313 18-11
WR132419 21-3
WR132441 8-13
WR132455 18-2
WR132455 18-7
WR132466 4-23
WR132508 19-19
WR132508 19-23
WR132508 19-24
WR132508 19-41
WR132509 19-19
WR132509 19-23
WR132509 19-24
WR132509 19-41
WR132565 18-16
WR132672 8-15
WR132678 4-12
WR132678 4-13
WR132678 4-18
WR132678 4-19
WR132679 4-12
WR132679 4-13
WR132679 4-18
WR132679 4-19
WR133601 21-1
WR133601 21-2
WR133604 18-15
WR133782 22-11
WR133782 22-12
WR133826 19-12
WR133993 1-4
WR134267 7-12
WR134268 7-12
WR134271 7-13
WR134273 7-12
WR134274 7-11
WR134275 7-12
WR134277 7-12
WR134278 7-12
WR134278 7-47
WR134278 7-48
WR134279 7-12
WR134279 7-47
WR134279 7-48
WR134280 7-12
WR134280 7-47
WR134280 7-48
WR134281 7-12
WR134281 7-47
WR134281 7-48
WR134284 7-47
WR134284 7-48
WR134286 7-47
WR134286 7-48
WR134287 7-47
WR134287 7-48
WR134288 7-47
WR134288 7-48
WR134418 7-10
WR134420 10-7
WR134421 10-14
WR134510 7-54
WR134521 7-26
WR134521 7-34
WR134522 7-26
WR134522 7-34
WR134523 7-26
WR134523 7-34
WR134524 7-26
WR134524 7-34
WR135300 18-1
WR135300 18-28
WR135545 18-4
WR135546 18-11
WR135546 18-3
WR135546 18-8
WR135792 21-3

NUMERIC INDEX

WR135793 21-3
WR135794 21-3
WR135807 21-3
WR135808 21-3
WR135896 21-1
WR136185 18-2
WR136192 18-2
WR136192 18-7
WR139369 7-10
WR139370 7-10
WR139371 7-10
WR139372 7-10
WR139373 7-10
WR139374 7-10
WR139375 7-10
WR139376 7-10
WR139377 7-10
WR139378 7-10
WR13938 7-10
WR139384 8-1
WR139385 8-1
WR139386 8-1
WR139387 8-1
WR139389 8-1
WR139390 8-1
WR139391 8-1
WR139393 8-1
WR139394 8-1
WR139395 8-1
WR139397 8-1
WR139451 1-5
WR139452 1-5
WR139453 1-5
WR139454 1-5
WR139455 1-5
WR139456 1-5
WR139457 1-5
WR139458 1-5
WR139459 1-5
WR16058 18-12
WR16058 18-34
WR16058 18-37
WR17220 18-15
WR17220 18-17
WR17220 18-2
WR17220 18-21
WR17220 18-23
WR17220 18-25
WR17220 18-32
WR17220 18-7
WR18171 10-9
WR18672 18-23
WR18672 18-25
WR18672 18-32
WR21845 18-17
WR21845 18-21
WR21845 18-23
WR21845 18-25
WR21845 18-32
WR22303 1-12
WR22303 1-13
WR239152 7-9
WR24555 9-4
WR24913 10-3
WR25293 18-24
WR25293 18-26
WR25441 7-56
WR25503 10-3
WR25504 10-3
WR25752 10-10
WR25752 11-5
WR25752 11-7
WR25752 1-3
WR25752 8-10
WR25752 8-7
WR26241 19-1
WR26241 19-2
WR26513 8-14
WR26528 7-64
WR26541 3-10
WR26541 3-4
WR26541 3-6
WR26541 3-9
WR27174 10-4
WR27174 10-9
WR27966 7-56
WR28265 7-47
WR28265 7-8
WR28944 3-11
WR28944 5-12
WR28944 5-13
WR28944 5-5
WR28944 5-7
WR28944 5-9
WR29125 7-18
WR29125 7-21
WR29201 10-13
WR29574 10-1
WR29674 10-6
WR30334 18-34
WR31555 18-11
WR31555 18-34
WR32254 11-5
WR32254 11-7
WR32254 18-38
WR32254 22-5
WR32254 7-11
WR32254 7-47
WR32254 7-50
WR32739 19-1
WR32739 19-11
WR32739 19-12
WR32739 19-3
WR32739 19-6
WR32739 19-9
WR330191 1-8
WR34500 19-13
WR34501 19-10
WR34501 19-13
WR34501 19-7
WR34508 22-5
WR34606 18-34
WR34606 18-4
WR34609 18-34
WR34609 18-4
WR35119 1-1
WR35152 3-3
WR35152 3-8
WR35153 8-15
WR35195 7-56
WR35925 18-16
WR35925 18-36
WR35943 7-59
WR36428 10-13
WR37156 14-3
WR37158 14-4
WR37159 14-3
WR37164 14-3
WR37166 14-3
WR37255 14-12
WR37255 14-17
WR37255 14-6
WR37369 14-10
WR37369 14-11
WR37369 14-3
WR37374 7-26
WR37374 7-34
WR37375 7-26
WR37375 7-34
WR37389 7-8
WR37390 7-8
WR37391 7-8
WR37392 7-8
WR37393 7-8
WR37394 7-8
WR37395 7-8
WR37396 7-8
WR37432 18-34
WR37435 18-34
WR37439 18-11
WR37439 18-34
WR37440 18-11
WR37440 18-34
WR37447 18-34
WR37448 18-34
WR37449 18-34
WR37450 18-34
WR37451 18-34
WR37452 18-11
WR37452 18-34
WR37453 18-34
WR37454 18-34
WR37461 18-24
WR37462 18-26
WR37463 18-24
WR37463 18-26
WR37483 18-24

NUMERIC INDEX

WR37483 18-26
WR37534 18-24
WR37534 18-26
WR37548 18-11
WR37548 18-34
WR37567 18-20
WR37574 18-17
WR37574 18-22
WR37574 18-23
WR37574 18-25
WR37574 18-32
WR37580 18-39
WR37581 10-15
WR37774 7-11
WR37775 18-37
WR37777 18-18
WR37777 18-21
WR37796 19-24
WR37797 19-23
WR37797 19-24
WR37798 19-41
WR37799 19-23
WR37821 7-11
WR37842 20-3
WR37843 20-3
WR37846 7-47
WR37855 7-56
WR37895 10-7
WR38198 14-7
WR38198 14-9
WR38716 18-20
WR38718 18-19
WR38719 18-18
WR38719 18-21
WR38719 18-24
WR38719 18-26
WR38720 18-18
WR38720 18-21
WR38720 18-24
WR38720 18-26
WR38762 7-64
WR38768 7-14
WR38769 7-14
WR38799 20-1
WR38799 20-4
WR38799 20-5
WR38800 20-2
WR38800 20-6
WR38850 20-3
WR38864 21-2
WR38865 21-3
WR38878 21-2
WR38879 21-2
WR39035 18-17
WR39035 18-23
WR39036 18-22
WR39036 18-25
WR39039 18-23
WR39039 18-25
WR39040 18-23
WR39040 18-25
WR39074 3-11
WR39074 5-12
WR39074 5-13
WR39078 5-12
WR39078 5-5
WR39079 5-13
WR39079 5-7
WR39080 3-11
WR39080 5-9
WR39087 18-18
WR39088 18-21
WR39098 4-3
WR40884 7-56
WR41842 6-1
WR41967 7-64
WR425679 8-1
WR425848 8-5
WR425858 8-1
WR50814 18-32
WR50814 18-33
WR50814 18-38
WR50830 10-10
WR50830 10-6
WR50830 1-1
WR50830 7-19
WR50830 7-22
WR50838 10-13
WR50838 1-1
WR50838 12-1
WR50838 22-4
WR50838 4-10
WR50838 4-12
WR50838 4-13
WR50838 4-14
WR50838 4-16
WR50838 4-18
WR50838 4-19
WR50838 4-8
WR50838 7-19
WR50838 7-22
WR50847 22-10
WR50857 3-11
WR50857 5-12
WR50857 5-13
WR50857 5-5
WR50857 5-7
WR50857 5-9
WR50857 8-15
WR50914 19-16
WR50955 14-3
WR51213 19-17
WR522823 3-3
WR522823 3-8
WR523809 1-6
WR524542 18-18
WR524542 18-21
WR524542 18-24
WR524542 18-26
WR55000 20-11
WR55021 22-1
WR55021 22-3
WR55026 10-2
WR55026 10-3
WR55026 10-9
WR55026 12-1
WR55026 8-11
WR55029 10-2
WR55035 10-4
WR55035 1-4
WR55035 7-19
WR55035 7-22
WR55036 20-11
WR55036 20-9
WR55041 1-12
WR55043 7-11
WR55043 7-47
WR55043 7-50
WR55043 7-9
WR55045 10-9
WR55045 22-4
WR55046 1-4
WR55046 3-1
WR55046 7-35
WR55047 3-11
WR55047 5-12
WR55047 5-13
WR55047 5-5
WR55047 5-7
WR55047 5-9
WR55047 7-19
WR55047 7-22
WR55047 7-35
WR55048 1-3
WR55051 5-14
WR55051 5-15
WR55051 5-17
WR55052 1-12
WR55052 12-1
WR55052 19-2
WR55053 10-9
WR55055 22-4
WR55059 5-18
WR55060 5-18
WR55063 4-10
WR55063 4-12
WR55063 4-13
WR55063 4-14
WR55063 4-16
WR55063 4-18
WR55063 4-19
WR55063 4-8
WR55065 3-10
WR55065 3-4
WR55065 3-6
WR55065 3-9
WR55067 5-14

NUMERIC INDEX

WR55067 5-15
WR55067 5-17
WR55068 18-38
WR55071 10-2
WR55071 10-3
WR55071 8-11
WR55075 12-1
WR55075 3-11
WR55075 5-12
WR55075 5-13
WR55075 5-5
WR55075 5-7
WR55075 5-9
WR55075 6-1
WR55075 7-19
WR55075 7-22
WR55075 7-24
WR55075 7-32
WR55075 8-10
WR55075 8-7
WR55076 22-7
WR55078 5-14
WR55078 5-15
WR55078 5-17
WR55078 5-18
WR55079 18-36
WR55079 3-11
WR55079 5-12
WR55079 5-13
WR55079 5-5
WR55079 5-7
WR55079 5-9
WR55083 18-32
WR55083 18-33
WR55083 18-39
WR55083 7-11
WR55091 10-2
WR55091 10-5
WR55091 8-14
WR55092 8-2
WR55098 7-19
WR55098 7-22
WR55099 5-14
WR55099 5-15
WR55099 5-17
WR55101 8-15
WR55102 10-2
WR55102 10-5
WR55102 8-14
WR55103 10-2
WR55103 10-3
WR55103 8-11
WR55106 10-13
WR55106 10-4
WR55106 10-9
WR55106 1-1
WR55106 12-1
WR55106 1-6
WR55106 22-4
WR55106 4-10
WR55106 4-12
WR55106 4-13
WR55106 4-14
WR55106 4-16
WR55106 4-18
WR55106 4-19
WR55106 4-8
WR55106 6-1
WR55106 7-19
WR55106 7-22
WR55106 7-24
WR55106 7-32
WR55106 8-10
WR55106 8-7
WR55111 4-23
WR55121 3-3
WR55121 3-8
WR55121 8-2
WR55128 10-13
WR55128 10-9
WR55134 18-18
WR55134 18-21
WR55134 18-24
WR55134 18-26
WR55141 4-10
WR55141 4-12
WR55141 4-13
WR55141 4-14
WR55141 4-16
WR55141 4-18
WR55141 4-19
WR55141 4-8
WR55147 4-23
WR55148 8-2
WR55149 8-15
WR55153 18-38
WR55157 1-1
WR55157 1-12
WR55157 1-4
WR55157 22-1
WR55157 22-2
WR55157 22-3
WR55157 8-15
WR55158 1-1
WR55158 1-11
WR55158 12-1
WR55158 1-3
WR55158 18-10
WR55158 18-13
WR55158 18-16
WR55158 18-35
WR55158 18-36
WR55158 18-42
WR55158 19-2
WR55158 22-2
WR55158 22-4
WR55158 4-10
WR55158 4-12
WR55158 4-13
WR55158 4-14
WR55158 4-16
WR55158 4-18
WR55158 4-19
WR55158 4-8
WR55158 6-1
WR55158 7-24
WR55158 7-32
WR55158 8-15
WR55159 1-1
WR55159 12-1
WR55163 3-3
WR55163 3-8
WR55168 3-11
WR55168 5-12
WR55168 5-13
WR55168 5-5
WR55168 5-7
WR55168 5-9
WR55170 19-18
WR55170 19-22
WR55170 19-41
WR55171 22-5
WR55172 18-38
WR55172 22-5
WR55173 19-16
WR55173 22-7
WR55173 4-10
WR55173 4-12
WR55173 4-13
WR55173 4-14
WR55173 4-16
WR55173 4-18
WR55173 4-19
WR55173 4-8
WR55174 22-7
WR55174 6-1
WR55178 22-5
WR55187 8-13
WR55188 19-2
WR55190 1-4
WR55190 4-10
WR55190 4-12
WR55190 4-13
WR55190 4-14
WR55190 4-16
WR55190 4-18
WR55190 4-19
WR55190 4-8
WR55190 8-15
WR55191 19-2
WR55191 3-1
WR55191 4-10
WR55191 4-12
WR55191 4-13
WR55191 4-14
WR55191 4-16
WR55191 4-18

NUMERIC INDEX

WR55191	4-19
WR55191	4-8
WR55191	6-1
WR55192	4-10
WR55192	4-12
WR55192	4-13
WR55192	4-14
WR55192	4-16
WR55192	4-18
WR55192	4-19
WR55192	4-8
WR55193	22-4
WR55197	18-4
WR55198	3-11
WR55198	5-12
WR55198	5-13
WR55198	5-5
WR55198	5-7
WR55198	5-9
WR55205	10-7
WR55205	1-1
WR55205	1-3
WR55205	22-7
WR55205	4-10
WR55205	4-12
WR55205	4-13
WR55205	4-14
WR55205	4-16
WR55205	4-18
WR55205	4-19
WR55205	4-8
WR55206	10-6
WR55206	1-1
WR55206	22-6
WR55206	22-7
WR55206	3-10
WR55206	3-4
WR55206	3-6
WR55206	3-9
WR55208	10-9
WR55208	1-1
WR55208	22-7
WR55209	4-12
WR55209	4-14
WR55209	4-18
WR55209	4-8
WR55210	4-10
WR55210	4-13
WR55210	4-16
WR55210	4-19
WR55214	1-1
WR55214	1-3
WR55214	1-4
WR55214	22-4
WR55214	22-5
WR55214	22-6
WR55214	4-10
WR55214	4-12
WR55214	4-13
WR55214	4-14
WR55214	4-16
WR55214	4-18
WR55214	4-19
WR55214	4-8
WR55214	7-24
WR55214	7-32
WR55214	7-57
WR55215	1-1
WR55215	1-9
WR55215	22-1
WR55215	22-2
WR55215	22-3
WR55215	22-4
WR55215	6-1
WR55215	7-24
WR55215	7-32
WR55217	1-9
WR55217	19-1
WR55219	1-12
WR55222	1-9
WR55226	10-7
WR55226	7-24
WR55226	7-32
WR55229	10-14
WR55229	10-8
WR55229	1-1
WR55235	22-13
WR55237	10-9
WR55247	10-7
WR55247	1-1
WR55247	6-1
WR55247	7-19
WR55247	7-22
WR55248	10-6
WR55248	10-7
WR55248	10-9
WR55248	7-18
WR55248	7-21
WR55248	7-57
WR55249	10-2
WR55249	10-5
WR55249	8-14
WR55250	10-13
WR55250	10-4
WR55251	8-15
WR55254	8-13
WR55255	18-24
WR55255	18-26
WR55255	8-13
WR55261	3-2
WR55266	8-15
WR55268	1-9
WR55271	10-10
WR55271	22-1
WR55271	22-2
WR55271	22-3
WR55272	18-14
WR55272	18-36
WR55272	18-38
WR55272	18-42
WR55272	19-1
WR55272	19-2
WR55272	19-3
WR55272	22-1
WR55272	22-2
WR55272	22-3
WR55272	3-11
WR55272	4-3
WR55272	4-4
WR55272	4-5
WR55272	5-12
WR55272	5-13
WR55272	5-14
WR55272	5-15
WR55272	5-17
WR55272	5-5
WR55272	5-7
WR55272	5-9
WR55272	6-1
WR55272	7-35
WR55272	8-23
WR55273	22-4
WR55274	18-38
WR55274	5-14
WR55274	5-15
WR55274	5-17
WR55274	8-15
WR55275	5-18
WR55280	22-5
WR55280	22-6
WR55280	22-7
WR55280	4-10
WR55280	4-12
WR55280	4-13
WR55280	4-14
WR55280	4-16
WR55280	4-18
WR55280	4-19
WR55280	4-8
WR55280	9-2
WR55281	10-6
WR55281	10-7
WR55281	22-5
WR55281	22-6
WR55281	22-7
WR55281	4-10
WR55281	4-12
WR55281	4-13
WR55281	4-14
WR55281	4-16
WR55281	4-18
WR55281	4-19
WR55281	4-8
WR55281	6-1
WR55281	8-2
WR55284	21-8
WR55288	10-9

NUMERIC INDEX

WR55293 19-41
WR55298 20-11
WR55298 20-9
WR55299 21-8
WR55299 22-1
WR55299 22-3
WR55300 10-3
WR55301 1-1
WR55301 12-1
WR55301 1-3
WR55301 1-6
WR55301 18-10
WR55301 18-13
WR55301 18-16
WR55301 1-9
WR55301 19-1
WR55301 19-11
WR55301 19-2
WR55301 19-3
WR55301 19-6
WR55301 19-9
WR55301 22-2
WR55301 22-4
WR55301 22-6
WR55301 3-1
WR55301 3-2
WR55301 4-10
WR55301 4-12
WR55301 4-13
WR55301 4-14
WR55301 4-16
WR55301 4-18
WR55301 4-19
WR55301 4-8
WR55301 6-1
WR55301 7-19
WR55301 7-22
WR55301 7-24
WR55301 7-32
WR55301 7-57
WR55301 8-14
WR55301 8-23
WR55302 3-10
WR55302 3-5
WR55302 3-6
WR55302 3-9
WR55308 8-14
WR55310 22-5
WR55312 10-2
WR55312 10-3
WR55312 10-7
WR55312 10-9
WR55312 1-11
WR55312 1-4
WR55312 7-18
WR55312 7-21
WR55313 8-15
WR55316 7-18
WR55316 7-19
WR55316 7-21
WR55316 7-22
WR55317 3-10
WR55317 3-4
WR55317 3-6
WR55317 3-9
WR55323 19-1
WR55325 10-1
WR55340 5-14
WR55340 5-15
WR55340 5-17
WR55349 22-6
WR55349 4-22
WR55350 7-19
WR55350 7-22
WR55351 7-24
WR55351 7-32
WR55351 8-15
WR55352 10-5
WR55352 11-5
WR55352 11-7
WR55352 12-1
WR55352 7-11
WR55352 8-15
WR55353 1-1
WR55353 22-1
WR55353 22-3
WR55353 22-4
WR55353 7-24
WR55353 7-29
WR55353 7-32
WR55353 8-2
WR55354 18-32
WR55354 18-33
WR55354 18-40
WR55354 1-9
WR55354 5-2
WR55354 5-3
WR55354 5-6
WR55354 5-8
WR55354 7-11
WR55355 18-17
WR55355 18-18
WR55355 18-21
WR55355 18-23
WR55355 18-24
WR55355 18-25
WR55355 18-26
WR55355 18-32
WR55355 18-38
WR55355 22-1
WR55355 22-3
WR55355 3-3
WR55355 3-8
WR55355 7-56
WR55362 5-2
WR55362 5-3
WR55362 5-6
WR55362 5-8
WR55365 7-27
WR55365 7-29
WR55366 3-11
WR55366 5-13
WR55366 7-27
WR55367 4-23
WR55372 18-33
WR55372 18-40
WR55372 21-2
WR55372 3-1
WR55388 7-19
WR55388 7-22
WR55393 10-2
WR55394 3-10
WR55394 3-4
WR55394 3-6
WR55394 3-9
WR55400 3-11
WR55400 5-12
WR55400 5-13
WR55400 5-5
WR55400 5-7
WR55400 5-9
WR55401 8-2
WR55402 4-10
WR55402 4-12
WR55402 4-13
WR55402 4-14
WR55402 4-16
WR55402 4-18
WR55402 4-19
WR55402 4-8
WR55404 12-1
WR55409 20-11
WR55409 20-9
WR55410 10-6
WR55410 1-1
WR55410 1-3
WR55410 1-4
WR55410 22-7
WR55412 10-9
WR55412 12-1
WR55412 12-5
WR55424 3-13
WR55426 3-10
WR55426 3-4
WR55426 3-6
WR55426 3-9
WR55427 3-10
WR55427 3-4
WR55427 3-6
WR55427 3-9
WR55428 3-10
WR55428 3-4
WR55428 3-6
WR55428 3-9
WR55429 3-10
WR55429 3-4
WR55429 3-6

NUMERIC INDEX

WR55429 3-9
WR55447 5-14
WR55447 5-15
WR55447 5-17
WR55454 7-26
WR55454 7-34
WR55456 7-59
WR55463 22-10
WR55489 4-23
WR55537 14-15
WR55537 14-20
WR55537 14-4
WR55546 8-14
WR55571 16-1
WR55582 19-11
WR55582 19-12
WR55582 19-6
WR55582 19-9
WR55582 7-11
WR55592 19-19
WR55592 19-23
WR55593 19-19
WR55593 19-23
WR55627 5-1
WR55647 5-14
WR55647 5-15
WR55647 5-17
WR55648 10-9
WR55649 1-12
WR55650 10-9
WR55652 1-12
WR55652 1-13
WR55654 3-11
WR55654 5-12
WR55654 5-13
WR55654 5-5
WR55654 5-7
WR55654 5-9
WR55665 22-1
WR55665 22-2
WR55665 22-3
WR55671 4-3
WR55672 4-3
WR55673 14-8
WR55688 18-17
WR55688 18-22
WR55784 3-10
WR55784 3-4
WR55784 3-6
WR55784 3-9
WR55852 10-12
WR55859 19-11
WR55859 19-6
WR55859 19-9
WR55866 19-19
WR55866 19-23
WR55879 21-3
WR55882 21-3
WR55883 21-3
WR55884 21-2
WR55888 21-1
WR55889 21-7
WR55890 21-7
WR55891 21-7
WR55892 21-7
WR55893 21-7
WR55894 21-7
WR55895 21-7
WR55896 21-7
WR55897 21-7
WR55898 21-7
WR55899 21-7
WR55900 21-7
WR55901 21-7
WR55902 21-1
WR55904 21-1
WR55905 21-8
WR55906 21-8
WR55907 21-8
WR55908 21-2
WR55909 21-9
WR55910 21-2
WR55911 21-10
WR55912 21-10
WR55913 21-10
WR55914 21-10
WR55920 21-1
WR55921 18-17
WR55921 18-22
WR55924 5-10
WR55925 5-11
WR55927 5-10
WR55927 5-11
WR55929 21-6
WR55930 21-6
WR55931 21-6
WR55933 3-14
WR55935 4-23
WR55936 3-15
WR55937 3-15
WR55939 3-15
WR55940 3-15
WR55968 5-14
WR55968 5-16
WR55968 5-17
WR55969 4-3
WR55969 4-4
WR55969 4-5
WR55970 4-3
WR55970 4-4
WR55970 4-5
WR55971 4-3
WR55971 4-4
WR55971 4-5
WR55974 4-3
WR55974 4-4
WR55974 4-5
WR55988 18-23
WR55988 18-25
WR55990 18-23
WR55990 18-25
WR55992 18-24
WR55992 18-26
WR55993 18-24
WR55993 18-26
WR55998 14-6
WR56031 20-11
WR56031 20-9
WR568276 1-11
WR568276 1-3
WR606610 7-7
WR657904 1-9
WR659764 3-10
WR659764 3-4
WR659764 3-6
WR659764 3-9
WR731972 1-3
WR731972 18-41
WR731972 4-10
WR731972 4-12
WR731972 4-13
WR731972 4-14
WR731972 4-16
WR731972 4-18
WR731972 4-19
WR731972 4-8
WR742876 1-1
WR743773 3-10
WR743773 3-4
WR743773 3-6
WR743773 3-9
WR743774 3-10
WR743774 3-4
WR743774 3-6
WR743774 3-9
WR818623 3-2
WR9017 3-10
WR9017 3-4
WR9017 3-6
WR9017 3-9

AGCO Corporation
4205 River Green Parkway
Duluth, GA 30096-2568

©AGCO Corporation, 2007
Printed in U.S.A.